HYUNDAI

OWNER'S MANUAL

Operation
Maintenance
Specifications

All information in this Owner's Manual is current at the time of publication. However, Hyundai reserves the right to make changes at any time so that our policy of continual product improvement may be carried out.

This manual applies to all models of this vehicle and includes descriptions and explanations of optional as well as standard equipment. As a result, you may find material in this manual that does not apply to your specific vehicle.

Please note that some models are equipped with Right-Hand Drive (RHD). The explanations and illustrations for some operations in RHD models are opposite of those written in this manual.

CAUTION: MODIFICATIONS TO YOUR HYUNDAI

Your Hyundai should not be modified in any way. Such modifications may adversely affect the performance, safety or durability of your Hyundai and may, in addition, violate conditions of the limited warranties covering the vehicle. Certain modifications may also be in violation of regulations established by the Department of Transportation and other government agencies in your country.

TWO-WAY RADIO OR CELLULAR TELEPHONE INSTALLATION

Your vehicle is equipped with electronic fuel injection and other electronic components. It is possible for an improperly installed/adjusted two-way radio or cellular telephone to adversely affect electronic systems. For this reason, we recommend that you carefully follow the radio manufacturer's instructions or consult your Hyundai dealer for precautionary measures or special instructions if you choose to install one of these devices.

SAFETY AND VEHICLE DAMAGE WARNING

This manual includes information titled as WARNING, CAUTION and NOTICE.
These titles indicate the following:

⚠ WARNING
This indicates that a condition may result in harm, serious injury or death to you or other persons if the warning is not heeded. Follow the advice provided with the warning.

⚠ CAUTION
This indicates that a condition may result in damage to your vehicle or its equipment if the caution is not heeded. Follow the advice provided with the caution.

✻ NOTICE
This indicates that interesting or helpful information is being provided.

FOREWORD

Thank you for choosing Hyundai. We are pleased to welcome you to the growing number of discriminating people who drive Hyundais. The advanced engineering and high-quality construction of each Hyundai we build is something of which we're very proud.

Your Owner's Manual will introduce you to the features and operation of your new Hyundai. It is suggested that you read it carefully because the information it contains can contribute greatly to the satisfaction you receive from your new car.

The manufacturer also recommends that service and maintenance on your vehicle be performed by an authorized Hyundai dealer.

HYUNDAI MOTOR MANUFACTURING COMPANY

Note : Because future owners will also need the information included in this manual, if you sell this Hyundai, please leave the manual in the vehicle for their use. Thank you.

⚠ CAUTION

Severe engine and transaxle damage may result from the use of poor quality fuels and lubricants that do not meet Hyundai specifications. You must always use high quality fuels and lubricants that meet the specifications listed on Page 8-5 in the Vehicle Specifications section of the Owner's Manual.

Copyright 2014 Hyundai Motor Company. All rights reserved. No part of this publication may be reproduced, stored in any retrieval system or transmitted in any form or by any means without the prior written permission of Hyundai Motor Company.

TABLE OF CONTENTS

Introduction	1
Your vehicle at a glance	2
Safety system of your vehicle	3
Features of your vehicle	4
Driving your vehicle	5
What to do in an emergency	6
Maintenance	7
Specifications & Consumer information	8
Index	I

Introduction

1

How to use this manual / 1-2
Fuel requirements / 1-3
Vehicle break-in process / 1-5
Indicator symbols on the instrument cluster / 1-6

HOW TO USE THIS MANUAL

We want to help you get the greatest possible driving pleasure from your vehicle. Your Owner's Manual can assist you in many ways. We strongly recommend that you read the entire manual. In order to minimize the chance of death or injury, you must read the WARNING and CAUTION sections in the manual.

Illustrations complement the words in this manual to best explain how to enjoy your vehicle. By reading your manual, you learn about features, important safety information, and driving tips under various road conditions.

The general layout of the manual is provided in the Table of Contents. A good place to start is the index; it has an alphabetical listing of all information in your manual.

Sections: This manual has eight sections plus an index. Each section begins with a brief list of contents so you can tell at a glance if that section has the information you want.

You'll find various WARNING's, CAUTION's, and NOTICE's in this manual. These were prepared to enhance your personal safety. You should carefully read and follow ALL procedures and recommendations provided in these WARNING's, CAUTION's and NOTICE's.

⚠ WARNING

A WARNING indicates a situation in which harm, serious bodily injury or death could result if the warning is ignored.

⚠ CAUTION

A CAUTION indicates a situation in which damage to your vehicle could result if the caution is ignored.

✻ NOTICE

A NOTICE indicates interesting or helpful information is being provided.

FUEL REQUIREMENTS

Gasoline engine

Unleaded

For Europe

For the optimal vehicle performance, we recommend you use unleaded gasoline which has an octane rating of RON (Research Octane Number) 95 / AKI (Anti Knock Index) 91 or higher. (Do not use methanol blended fuels.)

You may use unleaded gasoline with an octane rating of RON 91-94 / AKI 87-90 but it may result in slight performance reduction of the vehicle.

Except Europe

Your new vehicle is designed to use only unleaded fuel having an Octane Rating of RON (Research Octane Number) 91 / AKI (Anti-Knock Index) 87 or higher. (Do not use methanol blended fuels.)

Your new vehicle is designed to obtain maximum performance with UNLEADED FUEL, as well as minimize exhaust emissions and spark plug fouling.

⚠ CAUTION

NEVER USE LEADED FUEL. The use of leaded fuel is detrimental to the catalytic converter and will damage the engine control system's oxygen sensor and affect emission control.

Never add any fuel system cleaning agents to the fuel tank other than what has been specified. (We recommend that the system be consulted by an authorized HYUNDAI dealer.)

⚠ WARNING

- **Do not "top off" after the nozzle automatically shuts off when refueling.**
- **Always check that the fuel cap is installed securely to prevent fuel spillage in the event of an accident.**

Leaded (if equipped)

For some countries, your vehicle is designed to use leaded gasoline. When you are going to use leaded gasoline, we recommend that you ask an authorized HYUNDAI dealer.

Octane Rating of leaded gasoline is same with unleaded one.

Gasoline containing alcohol and methanol

Gasohol, a mixture of gasoline and ethanol (also known as grain alcohol), and gasoline or gasohol containing methanol (also known as wood alcohol) are being marketed along with or instead of leaded or unleaded gasoline.

Do not use gasohol containing more than 10% ethanol, and do not use gasoline or gasohol containing any methanol. Either of these fuels may cause drivability problems and damage to the fuel system, engine control system and emission control system.

Discontinue using gasohol of any kind if drivability problems occur.

Vehicle damage or driveability problems may not be covered by the manufacturer's warranty if they result from the use of:

1. Gasohol containing more than 10% ethanol.
2. Gasoline or gasohol containing methanol.
3. Leaded fuel or leaded gasohol.

⚠ CAUTION

Never use gasohol which contains methanol. Discontinue use of any gasohol product which impairs drivability.

Other fuels

Using fuels such as

- Silicone (Si) contained fuel,
- MMT (Manganese, Mn) contained fuel,
- Ferrocene (Fe) contained fuel, and
- Other metalic additives contained fuels,

may cause vehicle and engine damage or cause plugging, misfiring, poor acceleration, engine stalling, catalyst melting, abnormal corrosion, life cycle reduction, etc.

Also, the Malfunction Indicator Lamp (MIL) may illuminate.

✻ NOTICE

Damage to the fuel system or performance problem caused by the use of these fuels may not be covered by your New Vehicle Limited Warranty.

Use of MTBE

Fuels containing MTBE (Methyl Tertiary Butyl Ether) over 15.0% vol. (Oxygen Content 2.7% weight) should not be used in your vehicle.

Fuel containing MTBE over 15.0% vol. (Oxygen Content 2.7% weight) may reduce vehicle performance and produce vapor lock or hard starting.

Do not use methanol

Fuels containing methanol (wood alcohol) should not be used in your vehicle. This type of fuel can reduce vehicle performance and damage components of the fuel system, engine control system and emission control system.

⚠ CAUTION

Your New Vehicle Limited Warranty may not cover damage to the fuel system and any performance problems that are caused by the use of fuels containing methanol or fuels containing MTBE (Methyl Tertiary Butyl Ether) over 15.0% vol. (Oxygen Content 2.7% weight.)

Fuel Additives

HYUNDAI recommends that you use unleaded gasoline which has an octane rating of RON (Research Octane Number) 95 / AKI (Anti Knock Index) 91 or higher (for Europe) or Octane Rating of RON (Research Octane Number) 91 / AKI (Anti-Knock Index) 87 or higher (except Europe).

For customers who do not use good quality gasoline including fuel additives regularly, and have problems starting or the engine does not run smoothly, one bottle of additives added to the fuel tank at every 15,000km (for Europe)/5,000km (except Europe). Additives are available from your authorized HYUNDAI dealer along with information on how to use them.

Operation in foreign countries

If you are going to drive your vehicle in another country, be sure to:

- Observe all regulations regarding registration and insurance.
- Determine that acceptable fuel is available.

VEHICLE BREAK-IN PROCESS

No special break-in period is needed. By following a few simple precautions for the first 1,000 km (600 miles) you may add to the performance, economy and life of your vehicle:

- Do not race the engine.
- While driving, keep your engine speed (rpm, or revolutions per minute) between 2,000 rpm and 4,000 rpm.
- Do not maintain a single speed for long periods of time, either fast or slow.

  Varying engine speed is needed to properly break-in the engine.
- Avoid hard stops, except in emergencies, to allow the brakes to seat properly.
- Don't tow a trailer during the first 2,000 km (1,200 miles) of operation.

INDICATOR SYMBOLS ON THE INSTRUMENT CLUSTER

ECO indicator*

Air bag warning light

Seat belt warning light

Engine oil pressure warning light

Turn signal indicator

High beam indicator

Low beam indicator

Front fog light indicator*

Rear fog light indicator

Tail light indicator

Automatic transaxle shift position indicator (Automatic transaxle only)

Manual transaxle shift indicator (Manual transaxle only)

Charging system warning light

Electric power steering (EPS) system warning light

Door ajar warning light*

Tailgate open warning light*

Immobilizer indicator

Low fuel level warning light

Malfunction indicator

Parking brake & Brake fluid warning light

Anti-lock brake system (ABS) warning light*

Electronic stability control (ESC) indicator*

ESC OFF indicator*

Cruise indicator*

Cruise SET indicator*

Low tire pressure telltale* / TPMS malfunction indicator*

AUTO STOP for ISG system indicator*

❊ For more detailed explanations, refer to “Instrument cluster” in section 4.

* if equipped

Your vehicle at a glance

2

Interior overview / 2-2
Instrument panel overview / 2-4
Engine compartment / 2-6

INTERIOR OVERVIEW

■ Left-Hand drive type

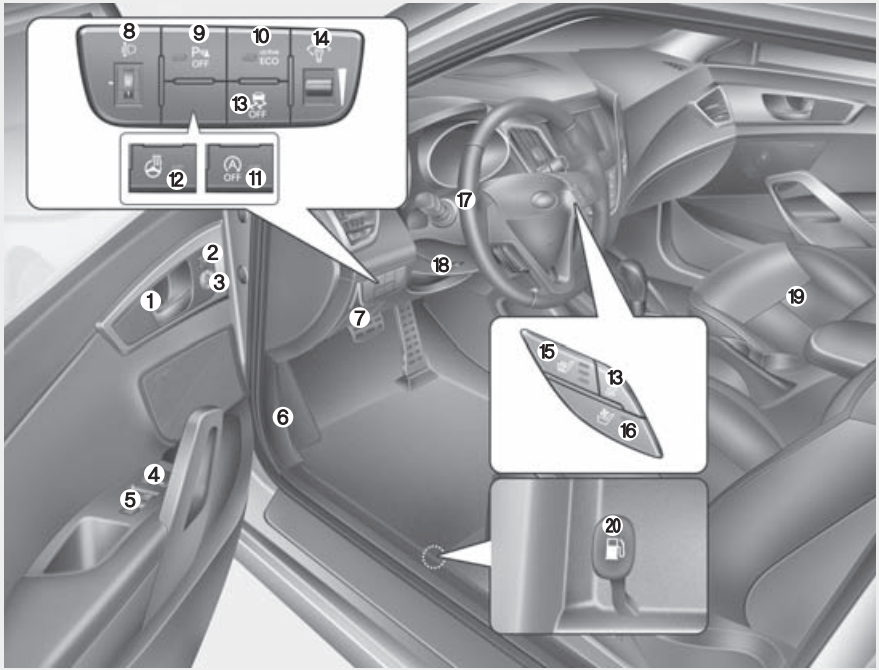

1. Inside door handle 4-15
2. Outside rearview mirror folding button*.....4-41
3. Outside rearview mirror control switch 4-40
4. Power window lock switch.....4-25
5. Power window switches 4-22
6. Hood release lever.....4-27
7. Fuse box 7-64
8. Headlight leveling device 4-80
9. Parking assist OFF button*.....4-68
10. Active ECO button*.....5-45
11. Idle Stop and Go system OFF button*.....5-13
12. Heated steering wheel* 4-37
13. ESC OFF button*.....5-35
14. Instrument panel illumination control switch*.....4-44
15. Seat warmer*.....3-11
16. Air ventilation*.....3-12
17. Steering wheel.....4-36
18. Steering wheel tilt lever.....4-37
19. Seat.....3-2
20. Fuel filler lid release lever.....4-29

* if equipped

OFS013001L

■ Right-Hand drive type

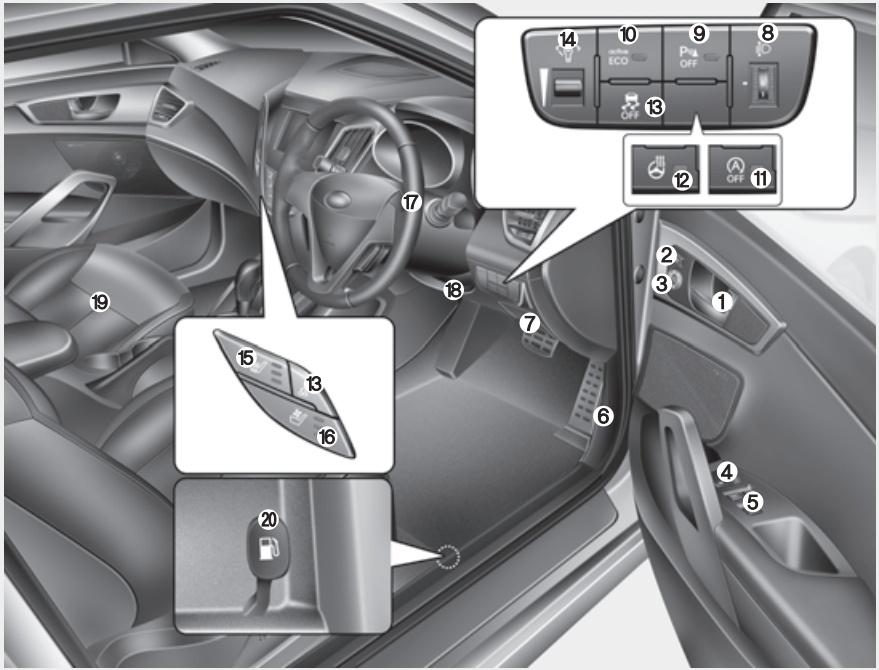

1. Inside door handle 4-15
2. Outside rearview mirror folding button*.....4-41
3. Outside rearview mirror control switch 4-40
4. Power window lock switch.....4-25
5. Power window switches 4-22
6. Hood release lever.....4-27
7. Fuse box 7-64
8. Headlight leveling device 4-80
9. Parking assist OFF button*.....4-68
10. Active ECO button*.....5-45
11. Idle Stop and Go system OFF button*.....5-13
12. Heated steering wheel* 4-37
13. ESC OFF button*.....5-35
14. Instrument panel illumination control switch*.....4-44
15. Seat warmer* 3-11
16. Air ventilation* 3-12
17. Steering wheel 4-36
18. Steering wheel tilt lever.....4-37
19. Seat.....3-2
20. Fuel filler lid release lever.....4-29

* if equipped

OFS013001R

INSTRUMENT PANEL OVERVIEW

■ Left-Hand drive type

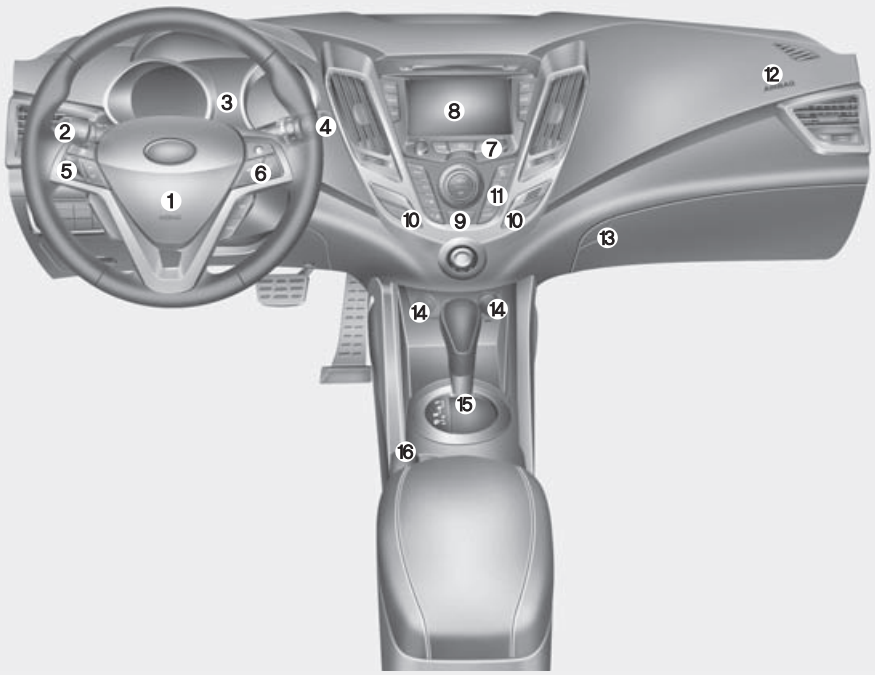

1. Driver's front air bag 3-45
2. Light control/Turn signals 4-75
3. Instrument cluster.....4-42
4. Wiper/Washer.....4-81
5. Steering wheel audio controls* 4-119
6. Auto cruise controls* 5-41
7. Audio controls* 4-118
8. Digital clock 4-112
9. Hazard warning flasher switch 4-73
10. Seat warmer* 3-11
11. Climate control system.....4-89/4-98
12. Passenger's front air bag 3-45
13. Glove box 4-110
14. Power outlet*/Cigarette lighter* 4-115/4-112
15. Shift lever 5-17/5-21
16. Parking brake 5-30

* if equipped

* The actual instrument panel in the vehicle may differ from the illustration.

OFS011002

■ Right-Hand drive type

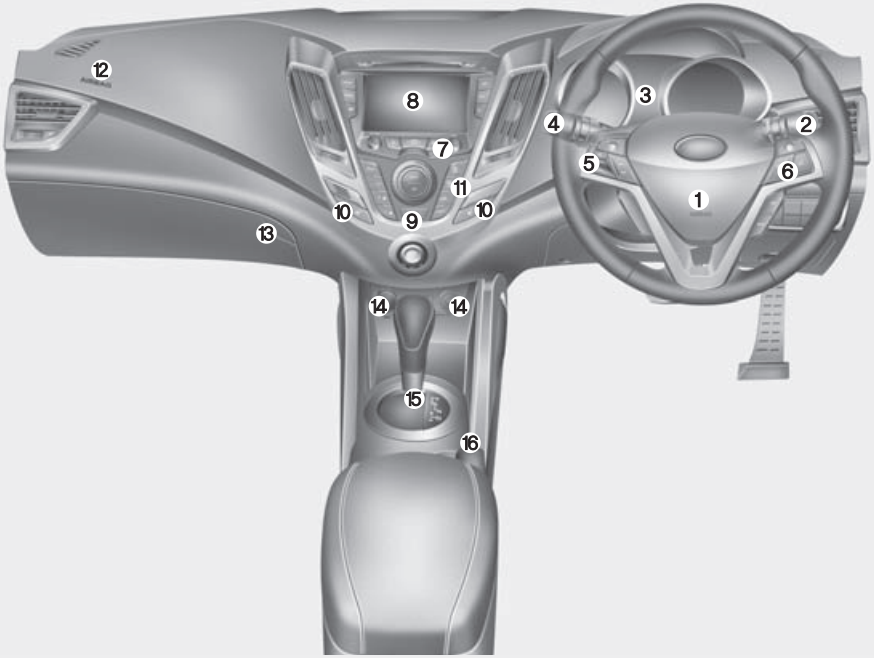

1. Driver's front air bag 3-45
2. Light control/Turn signals 4-75
3. Instrument cluster.....4-42
4. Wiper/Washer.....4-81
5. Steering wheel audio controls* 4-119
6. Auto cruise controls* 5-41
7. Audio controls* 4-118
8. Digital clock 4-112
9. Hazard warning flasher switch 4-73
10. Seat warmer* 3-11
11. Climate control system.....4-89/4-98
12. Passenger's front air bag 3-45
13. Glove box 4-110
14. Power outlet*/Cigarette lighter* 4-115/4-112
15. Shift lever 5-17/5-21
16. Parking brake 5-30

* if equipped

* The actual instrument panel in the vehicle may differ from the illustration.

OFS012002R

ENGINE COMPARTMENT

■ Left-Hand drive type

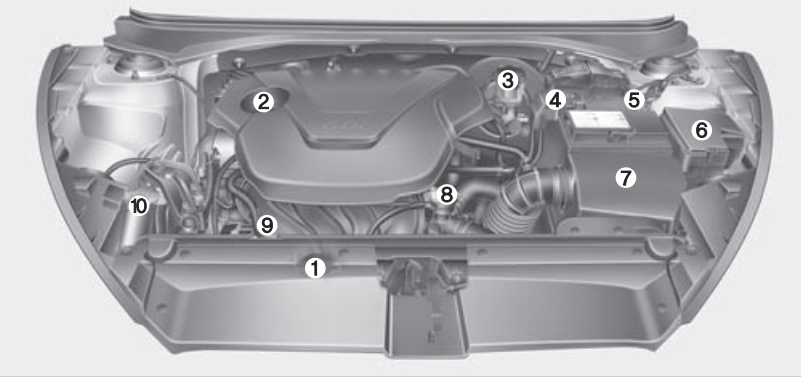

■ Right-Hand drive type

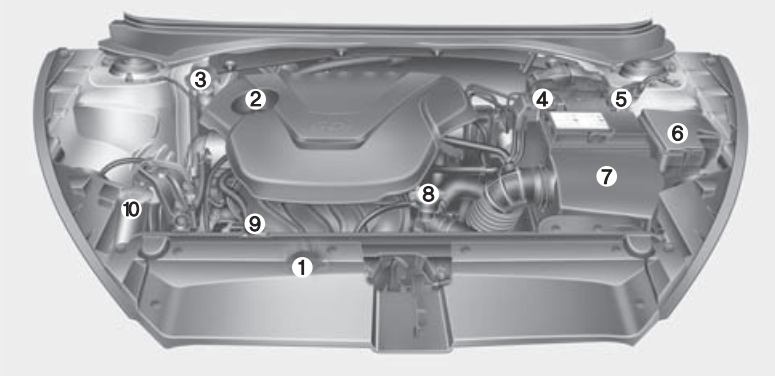

1. Engine coolant reservoir.....7-37
2. Engine oil filler cap 7-35
3. Brake/clutch* fluid reservoir.....7-40
4. Positive battery terminal 7-49
5. Negative battery terminal 7-49
6. Fuse box.....7-64
7. Air cleaner 7-42
8. Radiator cap 7-39
9. Engine oil dipstick.....7-35
10. Windshield washer fluid reservoir....7-41

* if equipped

❊ The actual engine room including engine cover in the vehicle may differ from the illustration.

OFS011003/OFS012003R

Seats / 3-2
Seat belts / 3-18
Child restraint system / 3-28
Air bag - supplemental restraint system / 3-38

Safety features of your vehicle

3

SEATS

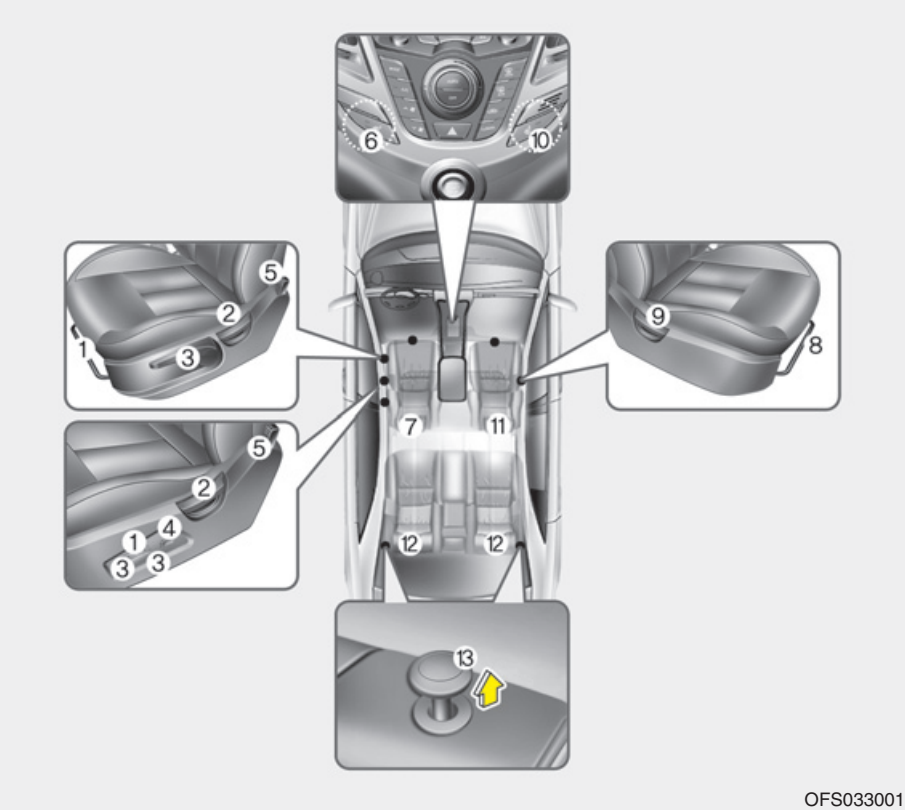

* The actual feature in the vehicle may differ from the illustration.

Driver's seat

(1) Seat adjustment, forward/backward
(2) Seatback recliner
(3) Seat adjustment, height
(4) Lumbar support*
(5) Driver seat folding lever
(6) Seat warmer*
(7) Headrest adjustment

Front passenger seat

(8) Seat adjustment, forward/backward
(9) Seatback recliner
(10) Seat warmer*
(11) Headrest adjustment

Rear seat

(12) Headrest adjustment
(13) Split folding rear seat

* if equipped

⚠ WARNING - Loose objects

Loose objects in the driver's foot area could interfere with the operation of the foot pedals, possibly causing an accident. Do not place anything under the front seats.

⚠ WARNING - Uprighting seat

When you return the seatback to its upright position, hold the seatback and return it slowly and be sure there are no other occupants around the seat. If the seatback is returned without being held and controlled, the back of the seat could move forward or backward resulting in accidental injury to a person struck by the seatback.

⚠ WARNING - Driver responsibility for passengers

Riding in a vehicle with seatback reclined could lead to serious or fatal injury in an accident. If a seat is reclined during an accident, the occupant's hips may slide under the lap portion of the seat belt applying great force to the unprotected abdomen. The protection of your restraint system (seat belt and air bags) is greatly reduced by reclining your seat. Serious or fatal internal injuries could result. The driver must advise the passenger to keep the seatback in an upright position whenever the vehicle is in motion.

⚠ WARNING

Do not use a sitting cushion that reduces friction between the seat and passenger. The passenger's hips may slide under the lap portion of the seat belt during an accident or a sudden stop. Serious or fatal internal injuries could result because the seat belt can't operate normally.

⚠ WARNING - Driver's seat

- **Never attempt to adjust seat while the vehicle is moving. This could result in loss of control, and an accident causing death, serious injury, or property damage.**
- **Do not allow anything to interfere with the normal position of the seatback. Storing items against a seatback or in any other way interfering with proper locking of a seatback could result in serious or fatal injury in a sudden stop or collision.**
- **Always drive and ride with your seatback upright and the lap portion of the seat belt snug and low across the hips. This is the best position to protect you in case of an accident.**
- **In order to avoid unnecessary and perhaps severe air bag injuries, always sit as far back as possible from the steering wheel while maintaining comfortable control of the vehicle. We recommend that your chest be at least 250 mm (10 inches) away from the steering wheel.**

⚠ WARNING - Rear seatbacks

- The rear seatback must be securely latched. If not, passengers and objects could be thrown forward resulting in serious injury or death in the event of a sudden stop or collision.
- Luggage and other cargo should be laid flat in the cargo area. If objects are large, heavy, or must be piled, they must be secured. Under no circumstances should cargo be piled higher than the seatbacks. Failure to follow these warnings could result in serious injury or death in the event of a sudden stop, collision or rollover.
- No passenger should ride in the cargo area or sit or lie on folded seatbacks while the vehicle is moving. All passengers must be properly seated in seats and restrained properly while riding.
- When resetting the seatback to the upright position, make sure it is securely latched by pushing it forward and backwards.

(Continued)

(Continued)

- To avoid the possibility of burns, do not remove the carpet in the cargo area. Emission control devices beneath this floor generate high temperatures.

⚠ WARNING

After adjusting the seat, always check that it is securely locked into place by attempting to move the seat forward or backward without using the lock release lever. Sudden or unexpected movement of the driver's seat could cause you to lose control of the vehicle resulting in an accident.

⚠ WARNING

- Do not adjust the seat while wearing seat belts. Moving the seat cushion forward may cause strong pressure on the abdomen.
- Use extreme caution so that hands or other objects are not caught in the seat mechanisms while the seat is moving.
- Do not put a cigarette lighter on the floor or seat. When you operate the seat, gas may gush out of the lighter and cause fire.
- If there are occupants in the rear seats, be careful while adjusting the font seat position.
- Use extreme caution when picking small objects trapped under the seats or between the seat and the center console. Your hands might be cut or injured by the sharp edges of the seats mechanism.

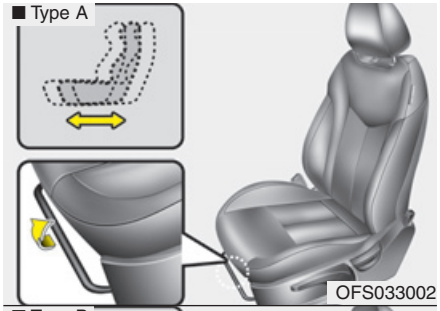

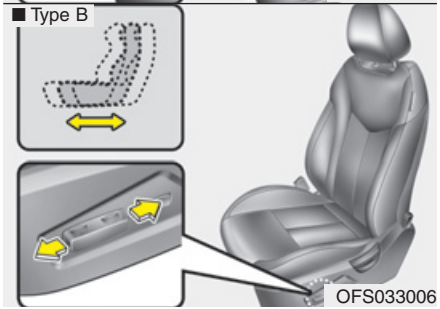

Front seat adjustment

Forward and backward

Type A

To move the seat forward or backward:

1. Pull the seat slide adjustment lever up and hold it.
2. Slide the seat to the position you desire.
3. Release the lever and make sure the seat is locked in place.

Adjust the seat before driving, and make sure the seat is locked securely by trying to move forward and backward without using the lever. If the seat moves, it is not locked properly.

Type B

Push the control switch forward or backward to move the seat to the desired position. Release the switch once the seat reaches the desired position.

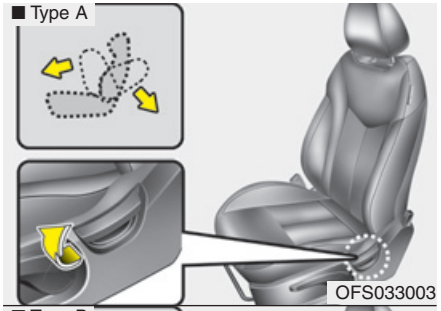

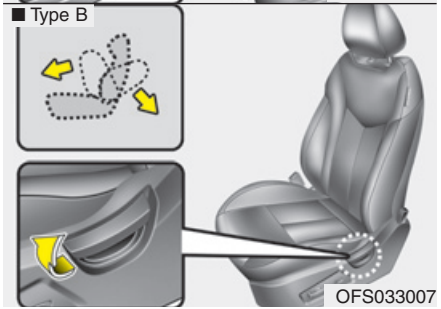

Adjusting the seatback recliner

To recline the seatback:

1. Lean forward slightly and lift up the seatback recline lever.
2. Carefully lean back on the seat and adjust the seatback of the seat to the position you desire.

3. Release the lever and make sure the seatback is locked in place. (The lever MUST return to its original position for the seatback to lock.)

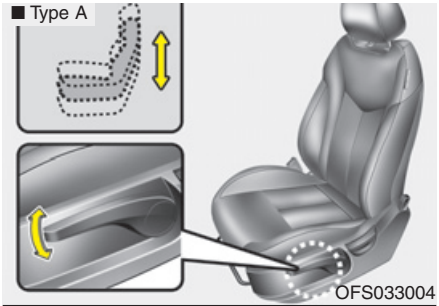

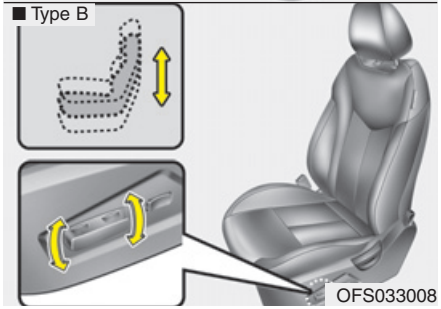

Seat cushion height

Type A

To change the height of the seat cushion, move the lever upwards or downwards.

- To lower the seat cushion, push the lever down several times.
- To raise the seat cushion, pull the lever up several times.

Type B

Pull the front portion of the control switch up to raise or down to lower the front part of the seat cushion. Pull the rear portion of the control switch up to raise or down to lower the rear part of the seat cushion. Release the switch once the seat reaches the desired position.

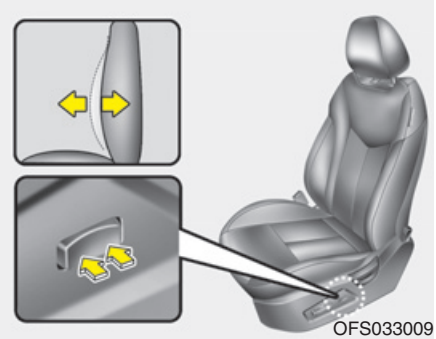

Lumbar support
(for driver's seat, if equipped)

The lumbar support can be adjusted by pressing the lumbar support switch on the side of the driver's seat. Press the front portion of the switch to increase support, or the rear portion of the switch, to decrease support.

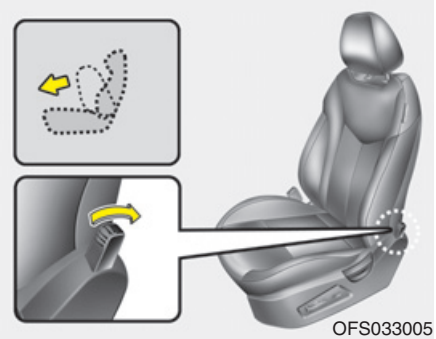

Driver's seat folding lever

If you pull the lever to backward, the driver seat will be folded. You can get out from rear seat to outside.

⚠ WARNING

While driving, do not control the lever. If not, the unexpected accident may occur.

Automatic adjustment (if equipped)

The front seat can be adjusted by using the control switches located on the outside of the seat cushion. Before driving, adjust the seat to the proper position so as to easily control the steering wheel, pedals and switches on the instrument panel.

⚠ WARNING

The power seat is operable with the ignition OFF.

Therefore, children should never be left unattended in the vehicle.

⚠ CAUTION

- ***The power seat is driven by an electric motor. Stop operating once the adjustment is completed. Excessive operation may damage the electrical equipment.***
- ***When in operation, the power seat consumes a large amount of electrical power. To prevent unnecessary charging system drain, don't adjust the power seat longer than necessary while the engine is not running.***
- ***Do not operate two or more power seat control switches at the same time. Doing so may result in power seat motor or electrical component malfunction.***

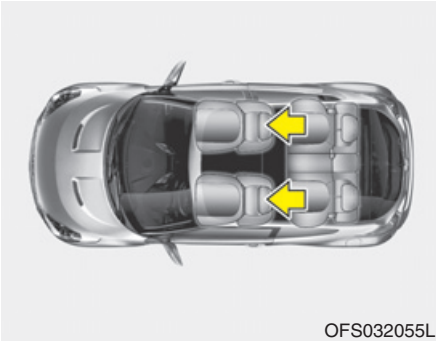

OFS032055L

Headrest

The driver's and front passenger's seats are equipped with a headrest for the occupant's safety and comfort.

The headrest not only provides comfort for the driver and front passenger, but also helps to protect the head and neck in the event of a collision.

⚠ WARNING

- **For maximum effectiveness in case of an accident, the headrest should be adjusted so the middle of the headrest is at the same height of the center of gravity of an occupant's head.**

  Generally, the center of gravity of most people's head is similar with the height of the top of their eyes. Also, adjust the headrest as close to your head as possible. For this reason, the use of a cushion that holds the body away from the seatback is not recommended.
- **Do not operate the vehicle with the headrests removed as severe injury to the occupants may occur in the event of an accident. Headrests may provide protection against neck injuries when properly adjusted.**
- **Do not adjust the headrest position of the driver's seat while the vehicle is in motion.**

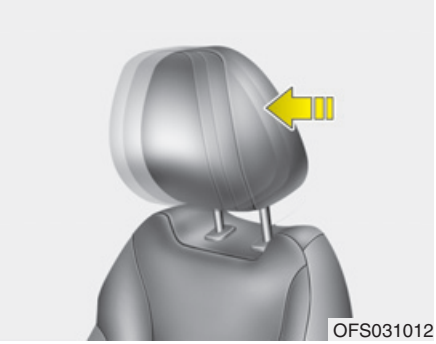

Forward and backward adjustment

The headrest may be adjusted forward to 3 different positions by pulling the headrest forward to the desired detent. To adjust the headrest to its furthest backwards position, pull it fully forward to the farthest position and release it. Adjust the headrest so that it properly supports the head and neck.

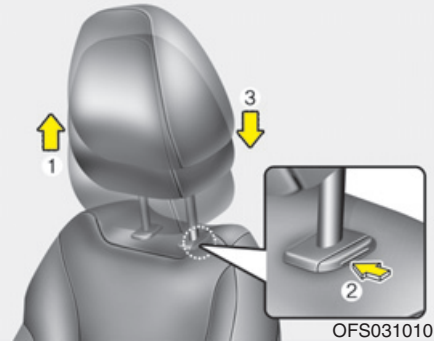

Adjusting the height up and down

To raise the headrest, pull it up to the desired position (1). To lower the headrest, push and hold the release button (2) on the headrest support and lower the headrest to the desired position (3).

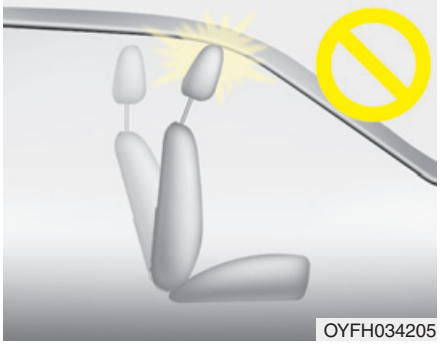

⚠ CAUTION

If you recline the seatback towards the front with the headrest and seat cushion raised, the headrest may come in contact with the sunvisor or other parts of the vehicle.

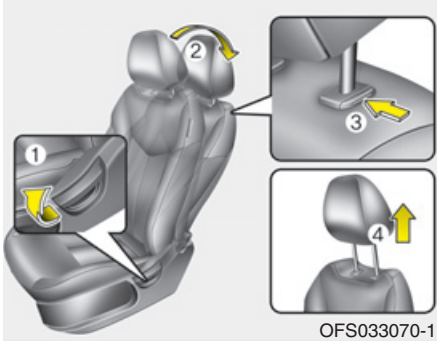

OFS033070-1

Removal

To remove the headrest:

1. Recline the seatback (2) with the recline lever or switch (1).
2. Raise headrest as far as it can go.
3. Press the headrest release button (3) while pulling the headrest up (4).

⚠ WARNING

NEVER allow anyone to ride in a seat with the headrest removed.

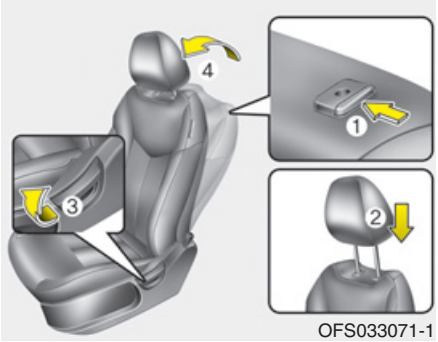

OFS033071-1

Reinstall

To reinstall the headrest :

1. Put the headrest poles (2) into the holes while pressing the release button (1).
2. Recline the seatback (4) with the recline lever or switch (3).
3. Adjust the headrest to the appropriate height.

⚠ WARNING

Always make sure the headrest locks into position after reinstalling and adjusting it properly.

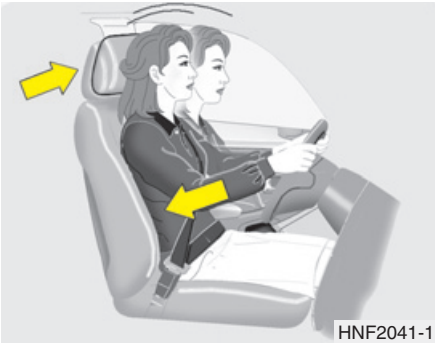
HNF2041-1

Active headrest (if equipped)

The active headrest is designed to move forward and upward during a rear impact. This helps to prevent the driver's and front passenger's heads from moving backward and thus helps prevent neck injuries.

⚠ WARNING

A gap between the seat and the headrest release button may appear when seating on the seat or when you push or pull the seat. Be careful not to get your finger, etc. caught in the gap.

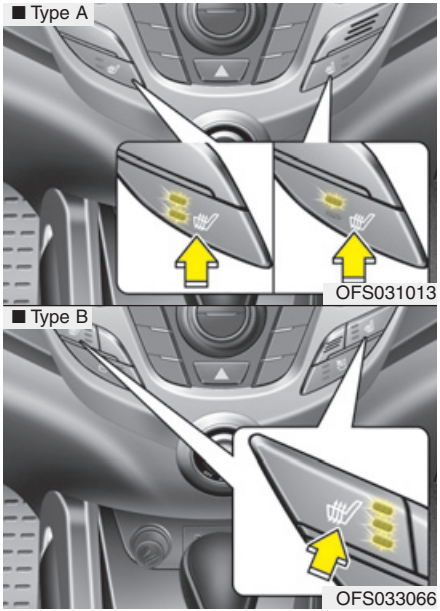

Seat warmer (if equipped)

The seat warmer is provided to warm the front seats during cold weather. With the ignition switch in the ON position, push either of the switches to warm the driver's seat or the front passenger's seat.

The seat warmer defaults to the OFF position whenever the ignition switch is turned ON.

During mild weather or under conditions where the operation of the seat warmer is not needed, keep the switches in the "OFF" position.

- Each time you press the switch, the temperature setting of the seat will change as follows :

■ Type A

OFF → HIGH ( ) → LOW ( )

■ Type B

OFF→HIGH( )→MIDDLE( )→LOW( )

✻ NOTICE

- **With the seat warmer switch in the ON position, the heating system in the seat turns off or on automatically depending on the seat temperature.**
- **If the seat warmer doesn't work when the ambient temperature is below 21°C (70°F), we recommend that the system be checked by an authorized HYUNDAI dealer.**

⚠ CAUTION

- ***When cleaning the seats, do not use an organic solvent such as thinner, benzene, alcohol and gasoline. Doing so may damage the surface of the heater or seats.***
- ***To prevent overheating the seat warmer, do not place anything on the seats that insulates against heat, such as blankets, cushions or seat covers while the seat warmer is in operation.***
- ***Do not place heavy or sharp objects on seats equipped with seat warmers. Damage to the seat warming components could occur.***
- ***Do not change the seat cover. It may damage the seat warmer or airventilation system.***

⚠ WARNING - Seat warmer burns

Passengers should use extreme caution when using seat warmers due to the possibility of excess heating or burns. The seat warmer may cause burns even at low temperatures, especially if used for long periods of time. In particular, the driver must exercise extreme care for the following types of passengers:

1. **Infants, children, elderly or disabled persons, or hospital outpatients**
2. **Persons with sensitive skin or those that burn easily**
3. **Fatigued individuals**
4. **Intoxicated individuals**
5. **Individuals taking medication that can cause drowsiness or sleepiness (sleeping pills, cold tablets, etc.)**

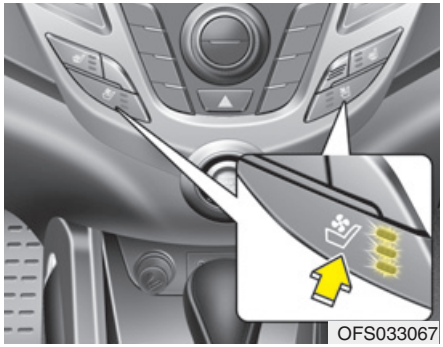

Air ventilation seat (if equipped)

The air ventilation is provided to cool the front seats during hot weather by blowing air through small vent holes on the surface of the seat and seatback. While the engine is running, press the switch to cool the seat.

When the operation of the air ventilation is not needed, keep the switches in the OFF position.

- Each time you press the switch, the airflow will change as follows:

OFF→HIGH( )→MIDDLE( )→LOW( )

- When the air ventilation seat is turned on, the seat may get cooler after about 5 minutes.
- Because the air ventilation uses the air in the vehicle, cooling efficiency depends on the temperature of the air. In order to improve cooling efficiency, use the air conditioning system together.
- The air ventilation seat defaults to the OFF position whenever the ignition switch is turned to the ON position.

⚠ CAUTION - Seat damage

- ***When cleaning the seats, do not use an organic solvent such as paint thinner, benzene, alcohol and gasoline. Doing so may damage the air ventilation seat.***
- ***Do not place heavy or sharp objects on the seat. Those things may damage the air ventilation seat.***
- ***Be careful not to spill liquid such as water or beverages on the seat. If you spill some liquid, wipe the seat with a dry towel. Before using the air ventilation seat, dry the seat completely.***
- ***Do not change the seat cover. It may damage the seat warmer or airventilation system.***

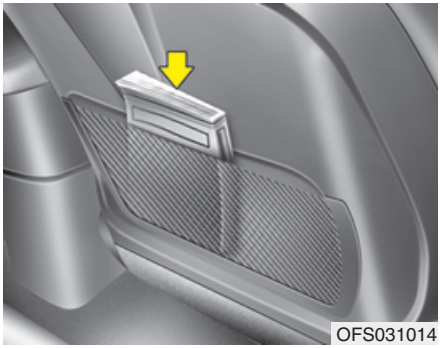

Seatback pocket (if equipped)

⚠ WARNING - Seatback pockets

Do not put heavy or sharp objects in the seatback pockets. In an accident they could come loose from the pocket and injure vehicle occupants.

Folding the rear seat

The rear seatbacks may be folded to facilitate carrying long items or to increase the luggage capacity of the vehicle.

⚠ WARNING

The purpose of the fold-down rear seatbacks is to allow you to carry longer objects than could not otherwise be accommodated.

Never allow passengers to sit on top of the folded down seatback while the car is moving as this is not a proper seating position and no seat belts are available for use. This could result in serious injury or death in case of an accident or sudden stop. Objects carried on the folded down seatback should not extend higher than the top of the front seats. This could allow cargo to slide forward and cause injury or damage during sudden stops.

To fold the rear seat

1. Insert the rear seat belt buckle in the pocket between the rear seatback and cushion, and insert the rear seat belt in the guide to prevent the seat belt from being damaged.
2. Set the front seatback to the upright position and if necessary, slide the front seat forward.
3. Lower the rear headrests to lowest position.

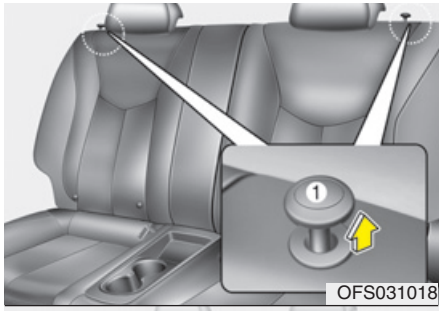

OFS031018

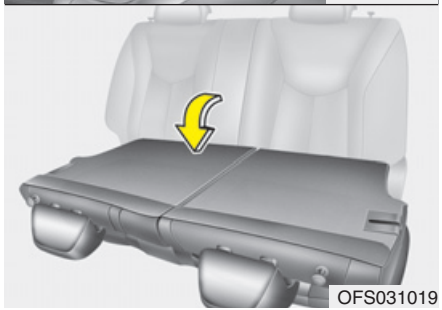
OFS031019

4. Pull the lock release lever (1) and fold the rear seatback forward and down firmly.
5. To use the rear seat, lift and pull the seatback backward. Pull the seatback firmly until it clicks into place. Make sure the seatback is locked in place. When you return the seatback to its upright position, always be sure it has locked into position by pushing on the top of the seatback.
6. Return the rear seat belt to the proper position.
7. When the seatback is completely installed, check the seatback folding lever again.

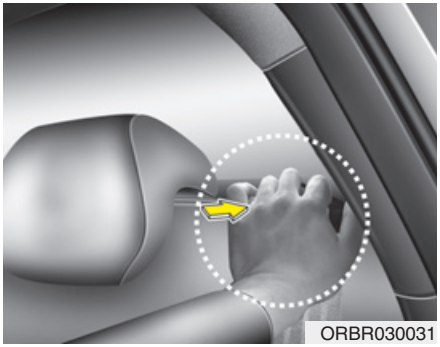
ORBR030031

✻ NOTICE

If you are not able to pull out the seat belt from the retractor, after returning the seatback to the upright position, press the seatbelt and seatback at the same time. Then pull the belt out. You will be able to pull the belt out smoothly.

⚠ WARNING

When you return the rear seatback to its upright position after being folded down:

Be careful not to damage the seat belt webbing or buckle. Do not allow the seat belt webbing or buckle to get caught or pinched in the rear seat. Ensure that the seatback is completely locked into its upright position by pushing on the top of the seatback. Otherwise, in an accident or sudden stop, the seat could fold down and allow cargo to enter the passenger compartment, which could result in serious injury or death.

⚠ WARNING - Uprighting seat

When you return the seatback to its upright position, hold the seatback and return it slowly. If the seatback is returned without holding it, the back of the seat could spring forward resulting in injury caused by being struck by the seatback.

⚠ CAUTION - Damaging rear seat belt buckles

When you fold the rear seatback or put luggage on the rear seat cushion, insert the buckle in the pocket between the rear seatback and cushion. Doing so can prevent the buckle from being damaged by the rear seatback or luggage.

⚠ CAUTION - Rear seat belts

When returning the rear seatbacks to the upright position, remember to return the rear shoulder belts to their proper position.

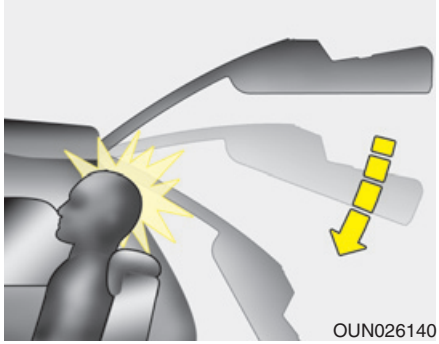
OUN026140

⚠ WARNING

Rear seat occupants should always remain in the center of the seat cushion so the occupant's head is protected by the headrest.

If not, the tailgate may hit the occupant's head, which could injury.

⚠ WARNING - Cargo

Cargo should always be secured to prevent it from being thrown about the vehicle in a collision and causing injury to the vehicle occupants. Special care of objects should be taken when placing them in the rear seats, since those may hit the front seat occupants in a frontal collision.

⚠ WARNING - Cargo loading

Make sure the engine is off, the automatic transaxle is in P (Park) or the manual transaxle is in R (Reverse) or 1st, and the parking brake is applied whenever loading or unloading cargo. Failure to take these steps may allow the vehicle to move if shift lever is inadvertently moved to another position.

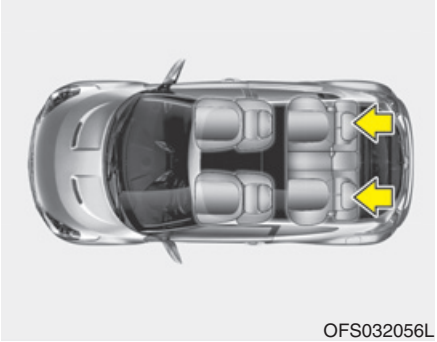
OFS032056L

Headrest

The rear seat(s) is equipped with headrests in all the seating positions for the occupant's safety and comfort.

The headrest not only provides comfort for passengers, but also helps to protect the head and neck in the event of a collision.

⚠ WARNING

- **For maximum effectiveness in case of an accident, the headrest should be adjusted so the middle of the headrest is at the same height of the center of gravity of an occupant's head. Generally, the center of gravity of most people's head is similar with the height of the top of their eyes. Also adjust the headrest as close to your head as possible. The use of a cushion that holds the body away from the seatback is not recommended.**
- **Do not operate the vehicle with the headrests removed as severe injury to an occupant may occur in the event of an accident. Headrests may provide protection against severe neck injuries when properly adjusted.**

⚠ CAUTION

When there is no occupant in the rear seats, adjust the height of the headrest to the lowest position. The rear seat headrest can reduce the visibility of the rear area.

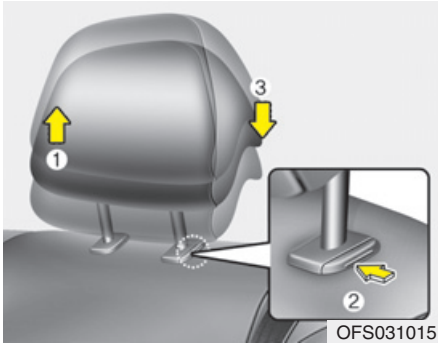

OFS031015

Adjusting the height up and down (if equipped)

To raise the headrest, pull it up to the highest position (1) by pushing the release button. To lower the headrest, push and hold the release button (2) on the headrest support and lower the headrest to the lowest position (3).

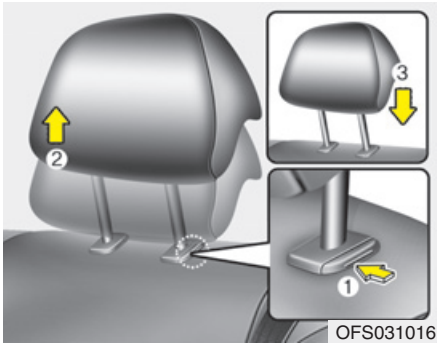

OFS031016

Removal (if equipped)

To remove the headrest, raise it as far as it can go then press the release button (1) while pulling upward (2).

To reinstall the headrest, put the headrest poles (3) into the holes while pressing the release button (1). Then adjust it to the appropriate height.

⚠ WARNING

Make sure the headrest locks in position after adjusting it for proper protection of the occupants.

SEAT BELTS

Seat belt restraint system

⚠ WARNING

- **For maximum restraint system protection, the seat belts must always be used whenever the car is moving.**
- **Seat belts are most effective when seatbacks are in the upright position.**
- **Children age 12 and under must always be properly restrained in the rear seat. Never allow children to ride in the front passenger seat. If a child over 12 must be seated in the front seat, he/she must be properly belted and the seat should be moved as far back as possible.**
- **Never wear the shoulder belt under your arm or behind your back. An improperly positioned shoulder belt can cause serious injuries in a crash. The shoulder belt should be positioned midway over your shoulder across your collarbone.**

(Continued)

(Continued)

- **Never wear a seat belt over fragile objects. If there is a sudden stop or impact, the seat belt can damage it.**
- **Avoid wearing twisted seat belts. A twisted belt can't do its job as well. In a collision, it could even cut into you. Be sure the belt webbing is straight and not twisted.**
- **Be careful not to damage the belt webbing or hardware. If the belt webbing or hardware is damaged, replace it.**

⚠ WARNING

Seat belts are designed to bear upon the bony structure of the body, and should be worn low across the front of the pelvis or the pelvis, chest and shoulders, as applicable; wearing the lap section of the belt across the abdominal area must be avoided.

(Continued)

(Continued)

Seat belts should be adjusted as firmly as possible, consistent with comfort, to provide the protection for which they have been designed.

A slack belt will greatly reduce the protection afforded to the wearer.

Care should be taken to avoid contamination of the webbing with polishes, oils and chemicals, and particularly battery acid. Cleaning may safely be carried out using mild soap and water. The belt should be replaced if webbing becomes frayed, contaminated or damaged.

It is essential to replace the entire assembly after it has been worn in a severe impact even if damage to the assembly is not obvious. Belts should not be worn with straps twisted. Each belt assembly must only be used by one occupant; it is dangerous to put a belt around a child being carried on the occupant's lap.

⚠ WARNING

- **No modifications or additions should be made by the user which will either prevent the seat belt adjusting devices from operating to remove slack, or prevent the seat belt assembly from being adjusted to remove slack.**
- **When you fasten the seat belt, be careful not to latch the seat belt in buckles of other seat. It's very dangerous and you may not be protected by the seat belt properly.**
- **Do not unfasten the seat belt and do not fasten and unfasten the seat belt repeatedly while driving. This could result in loss of control, and an accident causing death, serious injury, or property damage.**
- **When fastening the seat belt, make sure that the seat belt does not pass over objects that are hard or can break easily.**
- **Make sure there is nothing in the buckle. The seat belt may not be fastened securely.**

Seat belt warning

Type A

As a reminder to the driver, the seat belt warning light will blink for approximately 6 seconds each time you turn the ignition switch ON regardless of belt fastening.

If the driver's seat belt is unfastened after the ignition switch is ON, the seat belt warning light blinks again for approximately 6 seconds.

If the driver's seat belt is not fastened when the ignition switch is turned ON or if it is unfastened after the ignition switch is ON, the seat belt warning chime will sound for approximately 6 seconds. At this time, if the seat belt is fastened, the chime will stop at once. (if equipped)

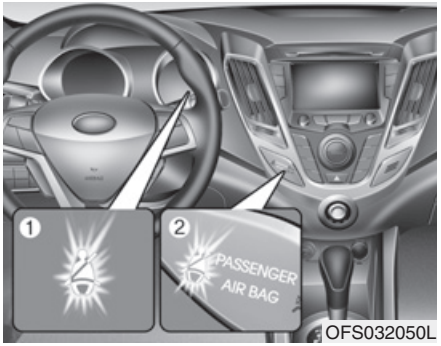

Type B

(1) Driver's seat belt warning light

(2) Front passenger's seat belt warning light

As a reminder to the driver and front passenger, the driver's and front passenger's seat belt warning lights will illuminate for approximately 6 seconds each time you turn the ignition switch ON regardless of belt fastening.

If the driver's or front passenger's seat belt is not fastened when the ignition switch is turned ON or if it is disconnected after the ignition switch is turned ON, the corresponding seat belt warning light will illuminate until the belt is fastened.

If you continue not to fasten the seat belt and you drive over 9km/h, the illuminated warning light will start to blink or illuminate until you drive under 6km/h.

If you continue not to fasten the seat belt and you drive over 20km/h, the seat belt warning chime will sound for approximately 100 seconds and the corresponding warning light will blink.

✻ NOTICE

- **You can find the front passenger's seat belt warning light on the center fascia panel.**
- **Although the front passenger seat is not occupied, the seat belt warning light will illuminate for 6 seconds.**
- **The front passenger's seat belt warning may operate when luggage is placed on the front passenger seat.**

⚠ WARNING

Riding in an improper position adversely affects the front passenger's seat belt warning system. It is important for the driver to instruct the passenger as to the proper seating instructions as contained in this manual.

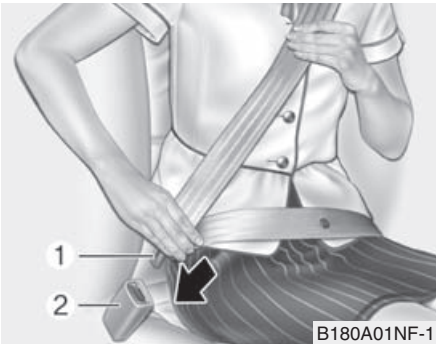

Lap/shoulder belt

To fasten your seat belt:

To fasten your seat belt, pull it out of the retractor and insert the metal tab (1) into the buckle (2). There will be an audible "click" when the tab locks into the buckle.

The seat belt automatically adjusts to the proper length only after the lap belt portion is adjusted manually so that it fits snugly around your hips. If you lean forward in a slow, easy motion, the belt will extend and let you move around. If there is a sudden stop or impact, however, the belt will lock into position. It will also lock if you try to lean forward too quickly.

✻ NOTICE

If you are not able to pull out the safety belt from the retractor, firmly pull the belt out and release it. After release, you will be able to pull the belt out smoothly.

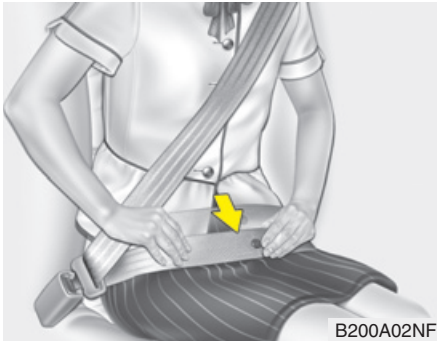

⚠ WARNING

You should place the lap belt portion as low as possible and snugly across your hips, not on your waist. If the lap belt is located too high on your waist, it may increase the chance of injury in the event of a collision. Both arms should not be under or over the belt. Rather, one should be over and the other under, as shown in the illustration.

Never wear the seat belt under the arm nearest the door.

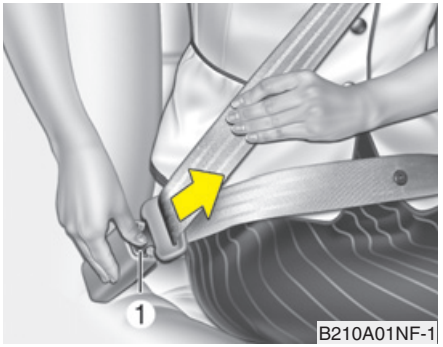

To release the seat belt:

The seat belt is released by pressing the release button (1) in the locking buckle. When it is released, the belt should automatically draw back into the retractor.

If this does not happen, check the belt to be sure it is not twisted, then try again.

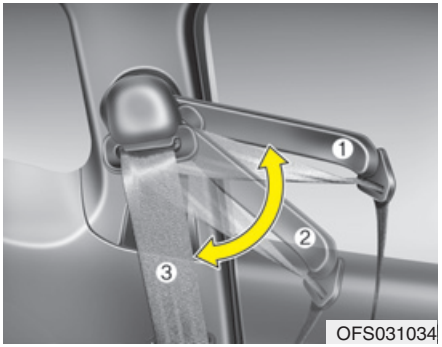

Shoulder belt extension guide (if equipped)

You can adjust the position of the shoulder belt extension guide for easier access to the shoulder belt.

Set the belt extension guide to the position (1~3) when using the seat belt.

Pre-tensioner seat belt

Your vehicle is equipped with driver's and front passenger's pre-tensioner seat belts. The purpose of the pre-tensioner is to make sure that the seat belts fit tightly against the occupant's body in certain frontal collisions. The pre-tensioner seat belts may be activated in crashes where the frontal collision is severe enough.

When the vehicle stops suddenly, or if the occupant tries to lean forward too quickly, the seat belt retractor will lock into position. In certain frontal collisions, the pre-tensioner will activate and pull the seat belt into tighter contact against the occupant's body.

If the system senses excessive seat belt tension on the driver or passenger's seat belt when the pre-tensioner activates, the load limiter inside the pre-tensioner will release some of the pressure on the affected seat belt. (if equipped)

⚠ WARNING

For your safety, be sure that the belt webbing is not loose or twisted and always sit properly on your seat.

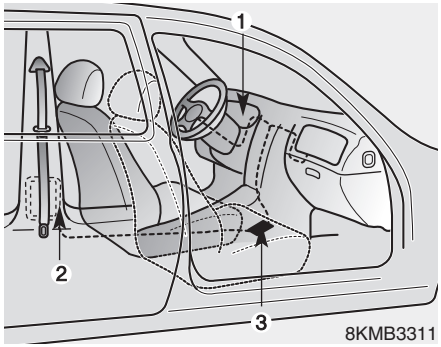

The seat belt pre-tensioner system consists mainly of the following components. Their locations are shown in the illustration:

1. SRS air bag warning light
2. Retractor pre-tensioner assembly
3. SRS control module

⚠ WARNING

To obtain maximum benefit from a pre-tensioner seat belt:

1. **The seat belt must be worn correctly and adjusted to the proper position. Please read and follow all of the important information and precautions about your vehicle's occupant safety features – including seat belts and air bags – that are provided in this manual.**
2. **Be sure you and your passengers always wear seat belts properly.**

✻ NOTICE

- Both the driver's and front passenger's pre-tensioner seat belts will be activated in certain frontal collisions. The pre-tensioner seat belts can be activated, where the frontal collision is severe enough, together with the air bags.
- When the pre-tensioner seat belts are activated, a loud noise may be heard and fine dust, which may appear to be smoke, may be visible in the passenger compartment. These are normal operating conditions and are not hazardous.
- Although it is harmless, the fine dust may cause skin irritation and should not be breathed for prolonged periods. Wash all exposed skin areas thoroughly after an accident in which the pre-tensioner seat belts were activated.

✻ NOTICE

The sensor that activates the SRS air bag is connected with the pre-tensioner seat belt and the SRS air bag warning light (🙍) on the instrument panel will illuminate for approximately 6 seconds after the ignition switch has been turned to the ON position, and then it should turn off.

⚠ CAUTION

If the pre-tensioner seat belt is not working properly, this warning light will illuminate even if there is no malfunction of the SRS air bag. If the SRS air bag warning light does not illuminate when the ignition switch is turned to ON, or if it remains illuminated after illuminating for approximately 6 seconds, or if it illuminates while the vehicle is being driven, we recommend that the system be inspected by an authorized HYUNDAI dealer.

⚠ WARNING

- **Pre-tensioners are designed to operate only one time. After activation, pre-tensioner seat belts must be replaced. All seat belts, of any type, should always be replaced after they have been worn during a collision.**
- **The pre-tensioner seat belt assembly mechanisms become hot during activation. Do not touch the pre-tensioner seat belt assemblies for several minutes after they have been activated.**
- **Do not attempt to inspect or replace the pre-tensioner seat belts yourself. We recommend that the system be inspected by an authorized HYUNDAI dealer.**
- **Do not strike the pre-tensioner seat belt assemblies.**
- **Improper handling of the pre-tensioner seat belt assemblies, and failure to heed the warnings not to strike, modify, inspect, replace, service or repair the pre-tensioner seat belt assemblies may lead to improper operation or inadvertent activation and serious injury.**

(Continued)

(Continued)

- **Always wear the seat belts when driving or riding in a motor vehicle.**
- **If the vehicle or pre-tensioner seat belt must be discarded, we recommend that you contact an authorized HYUNDAI dealer.**

⚠ CAUTION

Body work on the front area of the vehicle may damage the pre-tensioner seat belt system. Therefore, we recommend that the system be serviced by an authorized HYUNDAI dealer.

Seat belt precautions

⚠ WARNING

All occupants of the vehicle must wear their seat belts at all times. Seat belts and child restraints reduce the risk of serious or fatal injuries for all occupants in the event of a collision or sudden stop. Without a seat belt, occupants could be shifted too close to a deploying air bag, strike the interior structure or be thrown from the vehicle. Properly worn seat belts greatly reduce these hazards.

Always follow the precautions about seat belts, air bags and occupant seating contained in this manual.

Infant or small child

You should be aware of the specific requirements in your country. Child and/or infant seats must be properly placed and installed in the rear seat. For more information about the use of these restraints, refer to “Child restraint system” in this section.

⚠ WARNING

Every person in your vehicle needs to be properly restrained at all times, including infants and children. Never hold a child in your arms or lap when riding in a vehicle. The violent forces created during a crash will tear the child from your arms and throw the child against the interior. Always use a child restraint appropriate for your child's height and weight.

✻ NOTICE

Small children are best protected from injury in an accident when properly restrained in the rear seat by a child restraint system that meets the requirements of the Safety Standards of your country. Before buying any child restraint system, make sure that it has a label certifying that it meets Safety Standards of your country. The restraint must be appropriate for your child's height and weight. Check the label on the child restraint for this information. Refer to “Child restraint system” in this section.

Larger children

Children who are too large for child restraint systems should always occupy the rear seat and use the available lap/shoulder belts. The lap portion should be fastened and snugged on the hips and as low as possible. Check if the belt fits periodically. A child's squirming could put the belt out of position. Children are given the most safety in the event of an accident when they are restrained by a proper restraint system in the rear seat. If a larger child (over age 12) must be seated in the front seat, the child should be securely restrained by the available lap/shoulder belt and the seat should be placed in the rearmost position. Children age 12 and under should be restrained securely in the rear seat. NEVER place a child age 12 and under in the front seat. NEVER place a rear facing child seat in the front seat of a vehicle.

If the shoulder belt portion slightly touches the child’s neck or face, try placing the child closer to the center of the vehicle. If the shoulder belt still touches their face or neck they need to be returned to a child restraint system.

⚠ WARNING - Shoulder belts on small children

- **Never allow a shoulder belt to be in contact with a child's neck or face while the vehicle is in motion.**
- **If seat belts are not properly worn and adjusted on children, there is a risk of death or serious injury.**

Pregnant women

The use of a seat belt is recommended for pregnant women to lessen the chance of injury in an accident. When a seat belt is used, the lap belt portion should be placed as low and snugly as possible on the hips, not across the abdomen. For specific recommendations, consult a physician.

⚠ WARNING - Pregnant women

Pregnant women must never place the lap portion of the safety belt over the area of the abdomen where the fetus is located or above the abdomen where the belt could crush the fetus during an impact.

Injured person

A seat belt should be used when an injured person is being transported. When this is necessary, you should consult a physician for recommendations.

One person per belt

Two people (including children) should never attempt to use a single seat belt. This could increase the severity of injuries in case of an accident.

Do not lie down

To reduce the chance of injuries in the event of an accident and to achieve maximum effectiveness of the restraint system, all passengers should be sitting up and the front and rear seats should be in an upright position when the car is moving. A seat belt cannot provide proper protection if the person is lying down in the rear seat or if the front and rear seats are in a reclined position.

⚠ WARNING

Riding with a reclined seatback increases your risk of serious or fatal injuries in the event of a collision or sudden stop. The protection of your restraint system (seat belts and air bags) is greatly reduced by reclining your seat. Seat belts must be snug against your hips and chest to work properly. The more the seatback is reclined, the greater the chance that an occupant's hips will slide under the lap belt causing serious internal injuries or the occupant's neck could strike the shoulder belt. Drivers and passengers should always sit well back in their seats, properly belted, and with the seatbacks upright.

Care of seat belts

Seat belt systems should never be disassembled or modified. In addition, care should be taken to assure that seat belts and belt hardware are not damaged by seat hinges, doors or other abuse.

⚠ WARNING

When you return the rear seatback to its upright position after the rear seatback has been folded down, be careful not to damage the seat belt webbing or buckle. Be sure that the webbing or buckle does not get caught or pinched in the rear seat. A seat belt with damaged webbing or buckle could possibly fail during a collision or sudden stop, resulting in serious injury. If the webbing or buckles are damaged, get them replaced immediately.

Periodic inspection

All seat belts should be inspected periodically for wear or damage of any kind. Any damaged parts should be replaced as soon as possible.

Keep belts clean and dry

Seat belts should be kept clean and dry. If belts become dirty, they should be cleaned by using a mild soap solution and warm water. Bleach, dye, strong detergents or abrasives should not be used because they may damage and weaken the fabric.

When to replace seat belts

The entire in-use seat belt assembly or assemblies should be replaced if the vehicle has been involved in an accident. This should be done even if no damage is visible. We recommend that you consult an authorized HYUNDAI dealer.

CHILD RESTRAINT SYSTEM

Children riding in the car should sit in the rear seat and must always be properly restrained to minimize the risk of injury in an accident, sudden stop or sudden maneuver. According to accident statistics, children are safer when properly restrained in the rear seats than in the front seat. Larger children not in a child restraint should use one of the seat belts provided.

You should be aware of the specific requirements in your country. Child and/or infant safety seats must be properly placed and installed in the rear seat. You must use a commercially available child restraint system that meets the requirements of the Safety Standards of your country.

Child restraint systems are designed to be secured in vehicle seats by lap belts or the lap belt portion of a lap/shoulder belt, or by a tether anchor and/or ISOFIX anchors.

Children could be injured or killed in a crash if their restraints are not properly secured. For small children and babies, a child seat or infant seat must be used.

Before buying a particular child restraint system, make sure it fits your car seat and seat belts, and fits your child. Follow all the instructions provided by the manufacturer when installing the child restraint system.

⚠ WARNING

- **A child restraint system must be placed in the rear seat. Never install a child or infant seat on the front passenger's seat. Should an accident occur and cause the passenger-side air bag to deploy, it could severely injure or kill an infant or child seated in an infant or child seat. Thus only use a child restraint in the rear seat of your vehicle.**
- **A seat belt or child restraint system can become very hot if it is left in a closed vehicle on a sunny day, even if the outside temperature does not feel hot. Be sure to check the seat cover and buckles before placing a child there.**

(Continued)

(Continued)

- **When the child restraint system is not in use, store it in the luggage area or fasten it with a seat belt so that it will not be thrown forward in the case of a sudden stop or an accident.**
- **Children may be seriously injured or killed by an inflating air bag. All children, even those too large for child restraints, must ride in the rear seat.**

⚠ WARNING

To reduce the chance of serious or fatal injuries:

- **Children of all ages are safer when restrained in the rear seat. A child riding in the front passenger seat can be forcefully struck by an inflating air bag resulting in serious or fatal injuries.**
- **Always follow the instructions for installation and use of the child restraint maker.**
- **Always make sure the child seat is secured properly in the car and your child is securely restrained in the child seat.**
- **Never hold a child in your arms or lap when riding in a vehicle. The violent forces created during a crash will tear the child from your arms and throw the child against the car's interior.**
- **Never put a seat belt over yourself and a child. During a crash, the belt could press deep into the child causing serious internal injuries.**

(Continued)

(Continued)

- **Never leave children unattended in a vehicle – not even for a short time. The car can heat up very quickly, resulting in serious injuries to children inside. Even very young children may inadvertently cause the vehicle to move, entangle themselves in the windows, or lock themselves or others inside the vehicle.**
- **Never allow two children, or any two persons, to use the same seat belt.**
- **Children often squirm and reposition themselves improperly. Never let a child ride with the shoulder belt under their arm or behind their back. Always properly position and secure children in rear seat.**
- **Never allow a child to stand-up or kneel on the seat or floorboard of a moving vehicle. During a collision or sudden stop, the child can be violently thrown against the vehicles interior, resulting in serious injury.**

(Continued)

(Continued)

- **Never use an infant carrier or a child safety seat that "hooks" over a seatback, it may not provide adequate security in an accident.**
- **Seat belts can become very hot, especially when the car is parked in direct sunlight. Always check seat belt buckles before fastening them over a child.**
- **After an accident, we recommend that the system be checked by an authorized HYUNDAI dealer.**
- **If there is not enough space to place the child restraint system because of the driver's seat, install the child restraint system in the rear right seat.**

Rearward-facing child restraint system

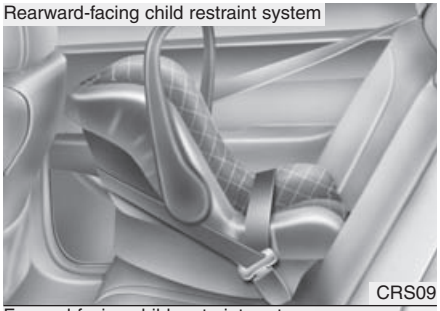

Forward-facing child restraint system

Using a child restraint system

For small children and babies, the use of a child seat or infant seat is required. This child seat or infant seat should be of appropriate size for the child and should be installed in accordance with the manufacturer's instructions.

For safety reasons, we recommend that the child restraint system is used in the rear seats.

⚠ WARNING

Never place a rear-facing child restraint in the front passenger seat, because of the danger that an inflating passenger-side air bag could impact the rear-facing child restraint and kill the child.

⚠ WARNING - Child seat installation

- **A child can be seriously injured or killed in a collision if the child restraint is not properly anchored to the car and the child is not properly restrained in the child restraint. Before installing the child restraint system, read the instructions supplied by the child restraint system manufacturer.**
- **If the seat belt does not operate as described in this section, we recommend that the system be checked by an authorized HYUNDAI dealer.**
- **Failure to observe this manual's instructions regarding child restraint system and the instructions provided with the child restraint system could increase the risk and/or severity of injury in an accident.**
- **If the vehicle headrest prevents proper installation of a child seat (as described in the child seat system manual), the headrest of the respective seating position shall be readjusted or entirely removed.**

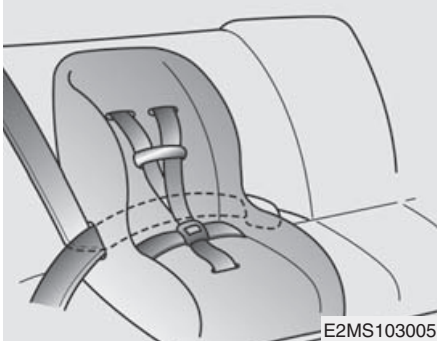

Installing a child restraint system by lap/shoulder belt

To install a child restraint system on the rear seats, do the following:

1. Place the child restraint system in the seat and route the lap/shoulder belt around or through the restraint, following the restraint manufacturer's instructions. Be sure the seat belt webbing is not twisted.

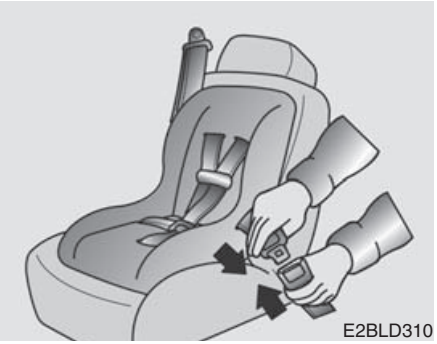

2. Fasten the lap/shoulder belt latch into the buckle. Listen for the distinct "click" sound.

Position the release button so that it is easy to access in case of an emergency.

3. Buckle the seat belt and allow the seat belt to take up any slack. After installation of the child restraint system, try to move it in all directions to be sure the child restraint system is securely installed.

If you need to tighten the belt, pull more webbing toward the retractor. When you unbuckle the seat belt and allow it to retract, the retractor will automatically revert back to its normal seated passenger emergency locking usage condition.

Child seat restraint suitability for seat position using the seat belt - For Europe

Use child safety seats that have been officially approved and are appropriate for your children. When using the child safety seats, refer to the following table.

Mass Group	Seating Position	
	Front Passenger	Rear Outboard
0 : Up to 10 kg (0 - 9 months)	U	U
0+ : Up to 13 kg (0 - 2 years)	U	U
I : 9 kg to 18 kg (9 months - 4 years)	U	U
II & III : 15 kg to 36 kg (4 - 12 years)	U	U

U : Suitable for "universal" category restraints approved for use in this mass group

⚠ WARNING

We recommend that a child restraint seat be installed in the rear seat, even if the front passenger's air bag ON/OFF switch is set to the OFF position. To ensure the safety of your child, the front passenger's air bag must be deactivated when it should be necessary to install a child restraint seat on the front passenger seat in exceptional circumstances.

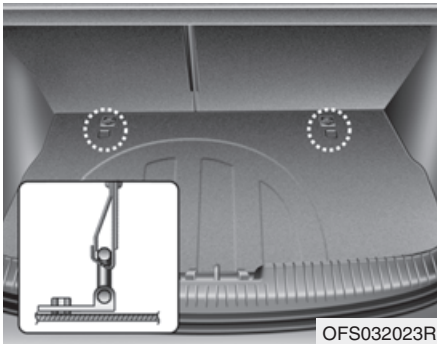
OFS032023R

Securing a child restraint seat with "Tether Anchor" system

Child restraint hook holders are located on the floor of luggage room.

OFS032024R

1. Route the child restraint seat strap over the seatback.

   For vehicles with adjustable headrest, route the tether strap under the headrest and between the headrest posts, otherwise route the tether strap over the top of the seatback.
2. Connect the tether strap hook to the appropriate child restraint hook holder and tighten to secure the child restraint seat.

⚠ WARNING

A child can be seriously injured or killed in a collision if the child restraint is not properly anchored to the car and the child is not properly restrained in the child restraint. Always follow the child seat manufacturer's instructions for installation and use.

⚠ WARNING - Tether strap

Never mount more than one child restraint to a single tether or to a single lower anchorage point. The increased load caused by multiple seats may cause the tethers or anchorage points to break, causing serious injury or death.

⚠ WARNING - Child restraint check

Check that the child restraint system is secure by pushing and pulling it in different directions. Incorrectly fitted child restraints may swing, twist, tip or separate causing death or serious injury.

⚠ WARNING - Child restraint anchorage

- **Child restraint anchorages are designed to withstand only those loads imposed by correctly fitted child restraints. Under no circumstances are they to be used for adult seat belts or harnesses or for attaching other items or equipment to the vehicle.**
- **The tether strap may not work properly if attached somewhere other than the correct tether anchor.**

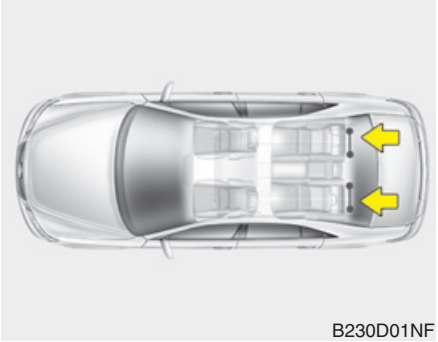
B230D01NF

Securing a child restraint system with "ISOFIX" system and "Tether Anchorage" system (if equipped)

ISOFIX is a standardized method of fitting child seats that eliminates the need to use the standard adult seat belt to secure the seat in the vehicle. This enables a much more secure and positive location with the added benefit of easier and quicker installation.

An ISOFIX-seat may only be installed if it has vehicle-specific or universal approval in accordance with the requirements of ECE-R 44.

❈ ISOFIX: International Standards Origanisation FIX

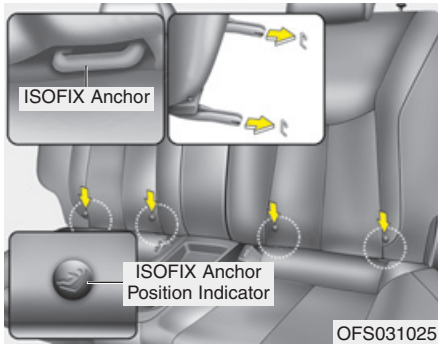

OFS031025

There are child restraint symbols located on the lower portion of each side of the rear seatbacks. These symbols indicate the position of the lower anchors for child restraints so equipped.

Both rear outboard seats are equipped with a pair of ISOFIX anchorages as well as a corresponding top tether anchorage on the floor behind the rear seats. The ISOFIX anchorages are located between seat cushion and back rest, marked with the ISOFIX icon.

For installation, CRS ISOFIX connecters have to engage with the vehicles ISOFIX anchorages (listen for a CLICK, check potential visual indicators on the CRS and cross-check by pulling).

CRS with universal approval to ECE-R 44 need to be fixed additionally with a top tether strap connected to the corresponding top tether anchorage point in the back rest.

The installing and the use of a child-seat has to be done according to the installing-manual, which is added to the ISOFIX-seat.

⚠ WARNING

Install the child restraint seat fully rearward against the seatback with the seatback inclined two positions from the rearmost latched position.

⚠ WARNING

- **When using the vehicle's "ISOFIX" system to install a child restraint system in the rear seat, all unused vehicle rear seat belt metal latch plates or tabs must be latched securely in their seat belt buckles and the seat belt webbing must be retracted behind the child restraint to prevent the child from reaching and taking hold of unretracted seat belts. Unlatched metal latch plates or tabs may allow the child to reach the unretracted seat belts which may result in strangulation and a serious injury or death to the child in the child restraint.**
- **Do not place anything around the ISOFIX anchors. Also make sure that the seat belt is not caught in the ISOFIX anchors.**

To secure the child restraint seat:

1. To engage the child restraint seat to the ISOFIX lower anchor, insert the child restraint seat latch into the ISOFIX anchor. Listen for the audible “click” sound.

⚠ CAUTION

Do not allow the rear seat belt webbing to get scratched or pinched by the ISOFIX-seat latch and ISOFIX anchor during the installation.

2. Connect the tether strap hook to the child restraint hook holder and tighten to secure the seat. (Refer to the previous page.)

⚠ WARNING

- **Do not install a child restraint seat at the center of the rear seat using the vehicle's ISOFIX anchors. The ISOFIX anchors are only provided for the left and right outboard rear seating positions. Do not misuse the ISOFIX anchors by attempting to attach a child restraint seat in the middle of the rear seat to the ISOFIX anchors.**

  In a crash, the child restraint seat ISOFIX attachments may not be strong enough to secure the child restraint seat properly in the center of the rear seat and may break, causing serious injury or death.
- **Do not mount more than one child restraint to a child restraint lower anchorage point. The improper increased load may cause the anchorage points or tether anchor to break, causing serious injury or death.**

(Continued)

(Continued)

- **Attach the ISOFIX or ISOFIX-compatible child restraint seat only to the appropriate locations shown in the illustration.**
- **Always follow the installation and use instructions provided by the manufacturer of the child restraint.**

Child seat restraint suitability for vehicle ISOFIX positions - For Europe

Mass Group	Size Class	Fixture	vehicle ISOFIX positions			
			Front Passenger	Rear Outboard (Driver side)	Rear Outboard (Passenger side)	Rear Center
Carrycot	F	ISO/L1	-	X	X	-
	G	ISO/L2	-	X	X	-
0 : UP to 10kg	E	ISO/R1	-	X	X	-
0+ : UP to 13kg	E	ISO/R1	-	X	X	-
	D	ISO/R2	-	X	X	-
	C	ISO/R3	-	X	X	-
I : 9 to 18kg	D	ISO/R2	-	X	X	-
	C	ISO/R3	-	X	X	-
	B	ISO/F2	-	IUF	IUF	-
	B1	ISO/F2X	-	IUF	IUF	-
	A	ISO/F3	-	X	X	-

IUF = Suitable for ISOFIX forward child restraints systems of universal category approved for use in the mass group.

X = ISOFIX position not suitable for ISOFIX child restraint system in this mass group and/or this size class.

* Both ISO/R2 and ISO/R3 are able to be set up only at the foremost position of the passenger seat.

* ISOFIX child restraint system size classes and fixtures

A - ISO/F3: Full-Height Forward-Facing toddler CRS (height 720mm)

B - ISO/F2: Reduced-Height Forward-Facing toddler CRS (height 650mm)

B1 - ISO/F2X: Reduced-Height Second Version Back Surface Shape Forward-Facing toddler CRS (height 650mm)

C - ISO/R3: Full-Size Rearward-Facing toddler CRS

D - ISO/R2: Reduced-Size Rearward-Facing toddler CRS

E - ISO/R1: Infant-Size Rearward-Facing CRS

F - ISO/L1: Left Lateral Facing position CRS (carry-cot)

G - ISO/L2: Right Lateral Facing position CRS (carry-cot)

AIR BAG - SUPPLEMENTAL RESTRAINT SYSTEM (SRS)

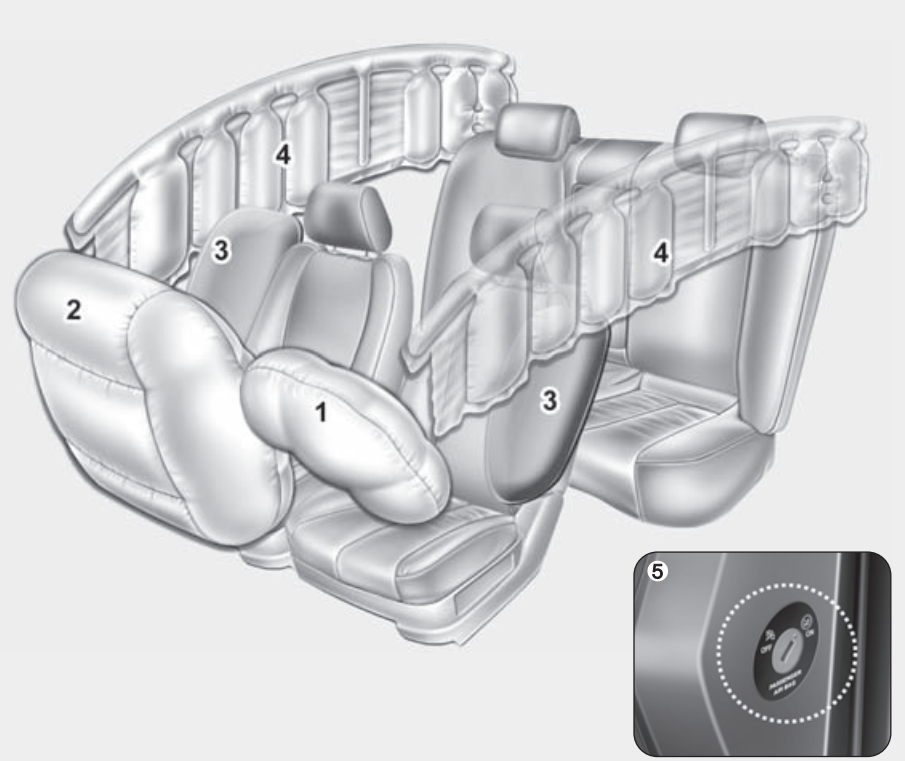

* The actual air bags in the vehicle may differ from the illustration.

OFS031026/OYN039026

(1) Driver's front air bag
(2) Passenger's front air bag
(3) Side impact air bag (if equipped)
(4) Curtain air bag (if equipped)
(5) Passenger's front air bag ON/OFF switch (if equipped)

⚠ WARNING

- **Even in vehicles with air bags, you and your passengers must always wear the safety belts provided in order to minimize the risk and severity of injury in the event of a collision or rollover.**
- **SRS and pretensioners contain explosive chemicals.**
  If scraping a vehicle without removing SRS and pretensioners from a vehicle, it may cause fire. Before scraping a vehicle, we recommend that you contact an authorized HYUNDAI dealer.
- **Keep the SRS parts and wirings away from water or any liquid. If the SRS components are inoperative due to exposure to water or liquids, it may cause fire or severe injury.**

How does the air bag system operate

- Air bags are activated (able to inflate if necessary) only when the ignition switch is turned to the ON or START position.
- Air bags inflate instantly in the event of serious frontal or side collision in order to help protect the occupants from serious physical injury.
- There is no single speed at which the air bags will inflate.

  Generally, air bags are designed to inflate based upon the severity of a collision and its direction. These two factors determine whether the sensors produce an electronic deployment/ inflation signal.
- Air bag deployment depends on a number of factors including vehicle speed, angles of impact and the density and stiffness of the vehicles or objects which your vehicle hits in the collision. The determining, factors are not limited to those mentioned above.
- The front air bags will completely inflate and deflate in an instant.

  It is virtually impossible for you to see the air bags inflate during an accident. It is much more likely that you will simply see the deflated air bags hanging out of their storage compartments after the collision.
- In order to help provide protection in a severe collision, the air bags must inflate rapidly. The speed of air bag inflation is a consequence of extremely short time in which a collision occurs and the need to get the air bag between the occupant and the vehicle structures before the occupant impacts those structures. This speed of inflation reduces the risk of serious or life-threatening injuries in a severe collision and is thus a necessary part of air bag design.

  However, air bag inflation can also cause injuries which can include facial abrasions, bruises and broken bones because the inflation speed also causes the air bags to expand with a great deal of force.
- **There are even circumstances under which contact with the steering wheel air bag can cause fatal injuries, especially if the occupant is positioned excessively close to the steering wheel.**

⚠ WARNING

- **To avoid severe personal injury or death caused by deploying air bags in a collision, the driver should sit as far back from the steering wheel air bag as possible (at least 250 mm (10 inches) away). The front passenger should always move their seat as far back as possible and sit back in their seat.**
- **Air bag inflates instantly in an event of a collision, passengers may be injured by the air bag expansion force if they are not in a proper position.**
- **Air bag inflation may cause injuries including facial or bodily abrasions, injuries from broken glasses or burns.**

Noise and smoke

When the air bags inflate, they make a loud noise and they leave smoke and powder in the air inside of the vehicle. This is normal and is a result of the ignition of the air bag inflator. After the air bag inflates, you may feel substantial discomfort in breathing due to the contact of your chest with both the seat belt and the air bag, as well as from breathing the smoke and powder. **Open your doors and/or windows as soon as possible after impact in order to reduce discomfort and prevent prolonged exposure to the smoke and powder.**

Though smoke and powder are non-toxic, it may cause irritation to the skin (eyes, nose and throat, etc.). If this is the case, wash and rinse with cold water immediately and consult with the doctor if the symptom persists.

⚠ WARNING

When the air bags deploy, the air bag related parts in the steering wheel and/or instrument panel and/or in both sides of the roof rails above the front and rear doors are very hot. To prevent injury, do not touch the air bag storage areas internal components immediately after an air bag has inflated.

■ Type A

1JBH3051

■ Type B

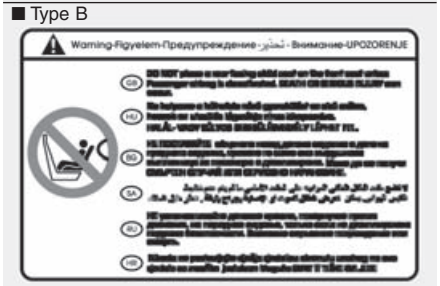

OLM034310

Do not install a child restraint on the front passenger seat

Never place a rear-facing child restraint in the front passenger's seat. If the air bag deploys, it would impact the rear-facing child restraint, causing serious or fatal injury.

In addition, do not place front-facing child restraints in the front passenger's seat either. If the front passenger air bag inflates, it would cause serious or fatal injuries to the child.

If your vehicle is equipped with the passenger's front air bag ON/OFF switch, you can activate or deactivate the front passenger's air bag when necessary.

⚠ WARNING

- **Extreme Hazard! Do not use a rearward facing child restraint on a seat protected by an air bag in front of it!**
- **Never put a child restraint in the front passenger's seat. If the front passenger air bag inflates, it would cause serious or fatal injuries.**
- **When children are seated in the rear outboard seats of vehicle equipped with side and/or curtain air bags, be sure to install the child restraint system as far away from the door side as possible, and securely lock the child restraint system in position.**

  Inflation of side and/or curtain air bags could cause serious injury or death to an infant or child.

Air bag warning and indicator

Air bag warning light

The purpose of the air bag warning light in your instrument panel is to alert you of a potential problem with your air bag - Supplemental Restraint System (SRS).

When the ignition switch is turned ON, the warning light should illuminate for approximately 6 seconds, then go off.

Have the system checked if:

- The light does not turn on briefly when you turn the ignition ON.
- The light stays on after illuminating for approximately 6 seconds.
- The light comes on while the vehicle is in motion.
- The light blinks when the ignition switch is in ON position.

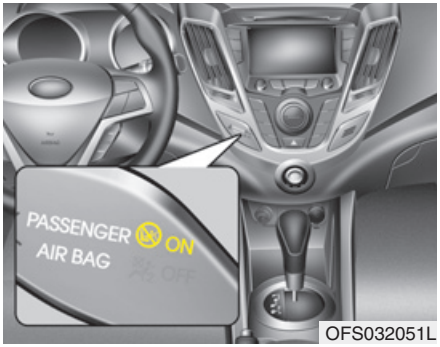

OFS032051L

Passenger air bag "ON" indicator (if equipped)

The passenger's front air bag ON indicator illuminates for approximately 4 seconds after the ignition switch is turned to the ON position.

The passenger's front air bag ON indicator also comes on when the passenger's front air bag ON/OFF switch is set to the ON position and goes off after approximately 60 seconds.

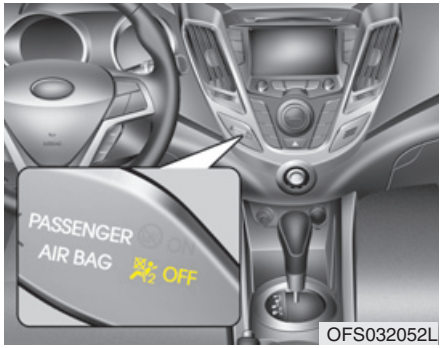

OFS032052L

Passenger air bag "OFF" indicator (if equipped)

The passenger's front air bag OFF indicator illuminates for about 4 seconds after the ignition switch is turned to the ON position.

The front passenger's air bag OFF indicator also comes on when the passenger's front air bag ON/OFF switch is set to the OFF position and goes off when the passenger's front air bag ON/OFF switch is set to the ON position.

⚠ CAUTION

If the passenger's front air bag ON/OFF switch malfunctions, the passenger's front air bag OFF indicator will not illuminate (The passenger's front air bag ON indicator comes on and goes off after approximately 60 seconds) and the passenger's front air bag will inflate in a frontal impact even if the passenger's front air bag ON/OFF switch is set to the OFF position.

If this occurs, we recommend that the system be inspected by an authorized HYUNDAI dealer.

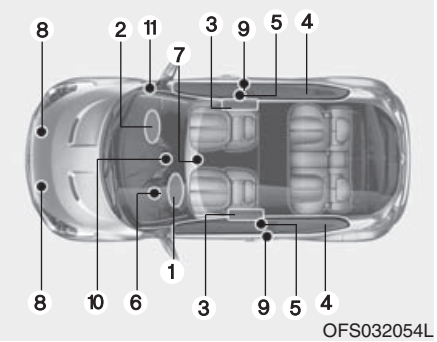

OFS032054L

SRS components and functions

The SRS consists of the following components:

1. Driver's front air bag module
2. Passenger's front air bag module
3. Side impact air bag modules (if equipped)
4. Curtain air bag modules (if equipped)
5. Retractor pre-tensioner assemblies
6. Air bag warning light
7. SRS control module (SRSCM)
8. Front impact sensors
9. Side impact sensors (if equipped)
10. Passenger's front air bag ON/OFF indicator (front passenger's seat only) (if equipped)
11. Passenger's front air bag ON/OFF switch (front passenger's seat only) (if equipped)

The SRSCM continuously monitors all SRS components while the ignition switch is ON to determine if a crash impact is severe enough to require air bag deployment or pre-tensioner seat belt deployment.

The SRS air bag warning light on the instrument panel will illuminate for about 6 seconds after the ignition switch is turned to the ON position, after which the air bag warning light should go out.

⚠ WARNING

If any of the following conditions occurs, this indicates a malfunction of the SRS. We recommend that the system be inspected by an authorized HYUNDAI dealer.

- **The light does not turn on briefly when you turn the ignition ON.**
- **The light stays on after illuminating for approximately 6 seconds.**
- **The light comes on while the vehicle is in motion.**
- **The light blinks when the ignition switch is in ON position.**

Driver's front air bag (1)

The air bag modules are located both in the center of the steering wheel and in the front passenger's panel above the glove box. When the SRSCM detects a sufficiently severe impact to the front of the vehicle, it will automatically deploy the front air bags.

Driver's front air bag (2)

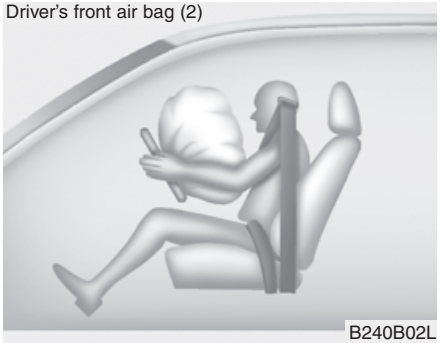

Upon deployment, tear seams molded directly into the pad covers will separate under pressure from the expansion of the air bags. Further opening of the covers then allows full inflation of the air bags.

Driver's front air bag (3)

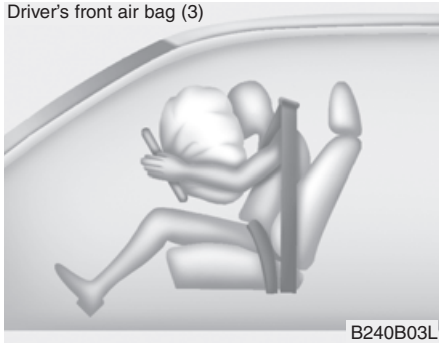

A fully inflated air bag, in combination with a properly worn seat belt, slows the driver's or the passenger's forward motion, reducing the risk of head and chest injury.

After complete inflation, the air bag immediately starts deflating, enabling the driver to maintain forward visibility and the ability to steer or operate other controls.

Passenger's front air bag

B240B05L

⚠ WARNING

- **Do not install or place any accessories (drink holder, cassette holder, sticker, etc.) on the front passenger's panel above the glove box in a vehicle with a passenger's air bag. Such objects may become dangerous projectiles and cause injury if the passenger's air bag inflates.**
- **When installing a container of liquid air freshener inside the vehicle, do not place it near the instrument cluster nor on the instrument panel surface.**

  It may become a dangerous projectile and cause injury if the passenger's air bag inflates.

⚠ WARNING

- **If an air bag deploys, there may be a loud noise followed by a fine dust released in the vehicle. These conditions are normal and are not hazardous - the air bags are packed in this fine powder. The dust generated during air bag deployment may cause skin or eye irritation as well as aggravate asthma for some persons. Always wash all exposed skin areas thoroughly with lukewarm water and a mild soap after an accident in which the air bags were deployed.**
- **The SRS can function only when the ignition switch is in the ON position.**
- **Before you replace a fuse or disconnect a battery terminal, turn the ignition switch to the LOCK position and remove the ignition key. Never remove or replace the air bag related fuse(s) when the ignition switch is in the ON position. Failure to heed this warning will cause the SRS air bag warning light to illuminate.**

■ Driver's front air bag

OFS031027

■ Passenger's front air bag

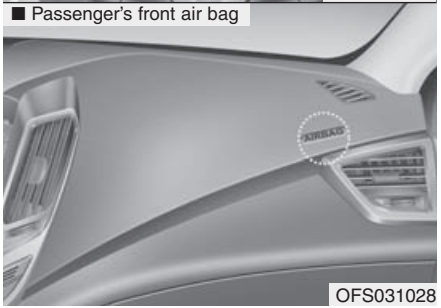

OFS031028

Driver's and passenger's front air bag

Your vehicle is equipped with a Supplemental Restraint (Air Bag) System and lap/shoulder belts at both the driver and passenger seating positions.

The indications of the system's presence are the letters "AIR BAG" engraved on the air bag pad cover in the steering wheel and the passenger's side front panel pad above the glove box.

The SRS consists of air bags installed under the pad covers in the center of the steering wheel and the passenger's side front panel above the glove box.

The purpose of the SRS is to provide the vehicle's driver and/or the front passenger with additional protection than that offered by the seat belt system alone in case of a frontal impact of sufficient severity.

⚠ WARNING

Always use seat belts and child restraints – every trip, every time, everyone! Air bags inflate with considerable force and in the blink of an eye. Seat belts help keep occupants in proper position to obtain maximum benefit from the air bag. Even with air bags, improperly and unbelted occupants can be severely injured when the air bag inflates. Always follow the precautions about seat belts, air bags and occupant safety contained in this manual.

To reduce the chance of serious or fatal injuries and receive the maximum safety benefit from your restraint system:

- **Never place a child in any child or booster seat in the front seat.**
- **ABC – Always Buckle Children in the back seat. It is the safest place for children of any age to ride.**
- **Front and side impact air bags can injure occupants improperly positioned in the front seats.**

(Continued)

(Continued)

- **Move your seat as far back as practical from the front air bags, while still maintaining control of the vehicle.**
- **You and your passengers should never sit or lean unnecessarily close to the air bags. Improperly positioned drivers and passengers can be severely injured by inflating air bags.**
- **Never lean against the door or center console – always sit in an upright position.**
- **Do not allow a passenger to ride in the front seat when the passenger's front air bag OFF indicator is illuminated, because the air bag will not deploy in the event of a moderate or severe frontal crash.**

(Continued)

(Continued)

- **No objects should be placed over or near the air bag modules on the steering wheel, instrument panel, and the front passenger's panel above the glove box, because any such object could cause harm if the vehicle is in a crash severe enough to cause the air bags to deploy.**
- **Do not tamper with or disconnect SRS wiring or other components of the SRS system. Doing so could result in injury, due to accidental deployment of the air bags or by rendering the SRS inoperative.**
- **If the SRS air bag warning light remains illuminated or blinks while the vehicle is being driven, we recommend that the system be inspected by an authorized HYUNDAI dealer.**

(Continued)

(Continued)

- **Air bags can only be used once – we recommend that the system be replaced by an authorized HYUNDAI dealer.**
- **The SRS is designed to deploy the front air bags only when an impact is sufficiently severe and when the impact angle is less than 30° from the forward longitudinal axis of the vehicle. Additionally, the air bags will only deploy once. Seat belts must be worn at all times.**
- **Front air bags are not intended to deploy in side-impact, rear-impact or rollover crashes. In addition, front air bags will not deploy in frontal crashes below the deployment threshold.**
- **A child restraint system must never be placed in the front seat. The infant or child could be severely injured or killed by an air bag deployment in case of an accident.**

(Continued)

(Continued)

- **Children age 12 and under must always be properly restrained in the rear seat. Never allow children to ride in the front passenger seat. If a child over 12 must be seated in the front seat, he or she must be properly belted and the seat should be moved as far back as possible.**
- **For maximum safety protection in all types of crashes, all occupants including the driver should always wear their seat belts whether or not an air bag is also provided at their seating position to minimize the risk of severe injury or death in the event of a crash. Do not sit or lean unnecessarily close to the air bag while the vehicle is in motion.**

(Continued)

(Continued)

- **Sitting improperly or out of position can result in serious or fatal injury in a crash. All occupants should sit upright with the seat back in an upright position, centered on the seat cushion with their seat belt on, legs comfortably extended and their feet on the floor until the vehicle is parked and the ignition key is removed.**
- **The SRS air bag system must deploy very rapidly to provide protection in a crash. If an occupant is out of position because of not wearing a seat belt, the air bag may forcefully contact the occupant causing serious or fatal injuries.**

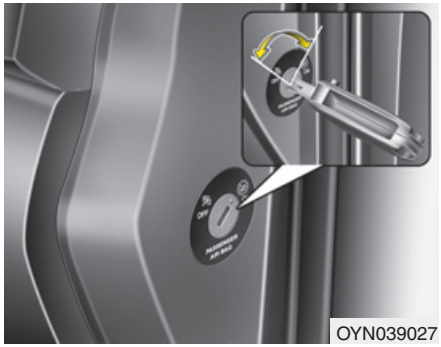

Passenger air bag "ON/OFF" switch (if equipped)

The passenger's front air bag can be deactivated by the passenger's front air bag ON/OFF switch if a child restraint is installed on the front passenger's seat or if the front passenger's seat is unoccupied by a person.

To ensure the safety of your child, the passenger's front air bag must be deactivated when it should be necessary to install a rearward facing child seat on the front passenger seat in exceptional circumstances.

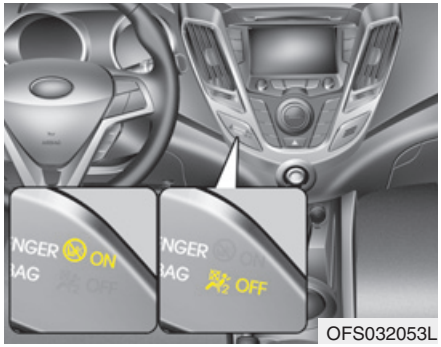

To deactivate or reactivate the passenger's front air bag:

To deactivate the passenger's front air bag, insert the master key into the passenger's front air bag ON/OFF switch and turn it to the OFF position. The passenger's front air bag OFF indicator ( ) will illuminate and stay on until the passenger's front air bag is reactivated.

To reactivate the passenger's front air bag, insert the master key into the passenger's front air bag ON/OFF switch and turn it to the ON position. The passenger's front air bag OFF indicator will go out and the passenger's front air bag ON indicator ( ) will illuminate for approximately 60 seconds.

⚠ WARNING

On some models, the front air bag ON/OFF switch could turn by using a similar small rigid device. Always check the status of the front air bag ON/OFF switch and passenger's front air bag ON/OFF indicator.

✻ NOTICE

- When the passenger's front air bag ON/OFF switch is set to the ON position, the passenger's front air bag is activated and child or infant seat should not be installed on the front passenger seat.
- When the passenger's front air bag ON/OFF switch is set to the OFF position, the passenger's front air bag is deactivated.

⚠ CAUTION

- *If the passenger's front air bag ON/OFF switch is not working properly, the air bag warning light ( )on the instrument panel will illuminate.*

  And, the passenger's front air bag OFF indicator ( ) will not illuminate (The passenger's front air bag ON indicator comes on and goes off after approximately 60 seconds), the SRS Control Module reactivate the passenger's front air bag and the passenger's front air bag will inflate in frontal impact crashes even if the passenger's front air bag ON/OFF switch is set to the OFF position.

  If this occurs, we recommend that the system be inspected by an authorized HYUNDAI dealer.

(Continued)

(Continued)

- *If the SRS air bag warning light blinks or does not illuminate when the ignition switch is turned to the ON position, or if it illuminates while the vehicle is being driven, we recommend that the system be inspected by an authorized HYUNDAI dealer.*

⚠ WARNING

- **The driver is responsible for the proper position of the passenger's front air bag ON/OFF switch.**
- **Deactivate the passenger's front air bag only when the ignition switch is switched off, or the malfunction may occur in the SRS Control Module.**

  And there may be a danger that the driver's and/or front passenger's and/or side and curtain air bag may fail to trigger, or not trigger correctly during a collision.
- **Never install a rearward facing child seat on the front passenger's seat unless the passenger's front air bag has been deactivated. The infant or child could be severely injured or killed by an air bag deployment in case of an accident.**

(Continued)

(Continued)

- **Even though your vehicle is equipped with the passenger's front air bag ON/OFF switch, do not install a child restraint system in the front passenger's seat. A child restraint system must never be placed in the front seat. Children who are too large for child restraint systems should always occupy the rear seat and use the available lap/shoulder belts. Children are afforded the most safety in the event of an accident when they are restrained by a proper restraint system in the rear seat.**
- **As soon as the child seat is no longer needed on the front passenger's seat, reactivate the front passenger's air bag.**

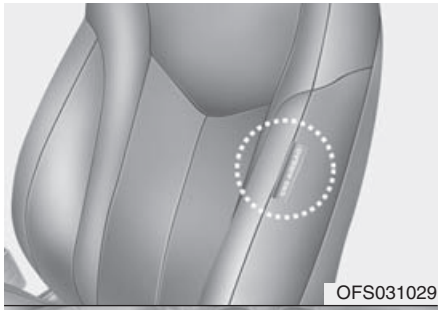
OFS031029

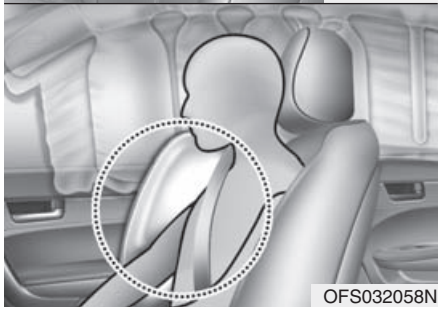
OFS032058N

Side impact air bag (if equipped)

Your vehicle is equipped with a side impact air bag in each front seat. The purpose of the air bag is to provide the vehicle's driver and/or the front passenger with additional protection than that offered by the seat belt alone.

The side impact air bags are designed to deploy only during certain side-impact collisions, depending on the crash severity, angle, speed and point of impact. The side impact air bags are not designed to deploy in all side impact situations.

⚠ WARNING

Do not allow the passengers to lean their heads or bodies onto doors, put their arms on the doors, stretch their arms out of the window, or place objects between the doors and passengers when they are seated on seats equipped with side and/or curtain air bags.

⚠ WARNING

- **The side impact air bag is supplemental to the driver's and the passenger's seat belt systems and is not a substitute for them. Therefore your seat belts must be worn at all times while the vehicle is in motion. The air bags deploy only in certain side impact conditions severe enough to cause significant injury to the vehicle occupants.**
- **For best protection from the side impact air bag system and to avoid being injured by the deploying side impact air bag, both front seat occupants should sit in an upright position with the seat belt properly fastened. The driver's hands should be placed on the steering wheel at the 9:00 and 3:00 positions. The passenger's arms and hands should be placed on their laps.**
- **Do not use any accessory seat covers.**

(Continued)

(Continued)

- **Use of seat covers could reduce or prevent the effectiveness of the system.**
- **Do not install any accessories on the side or near the side impact air bag.**
- **Do not place any objects over the air bag or between the air bag and yourself.**
- **Do not place any objects (an umbrella, bag, etc.) between the front door and the front seat. Such objects may become dangerous projectiles and cause injury if the supplemental side impact air bag inflates.**
- **To prevent unexpected deployment of the side impact air bag that may result in personal injury, avoid impact to the side impact sensor when the ignition switch is on.**
- **If the seat or seat cover is damaged, we recommend that the system be serviced by an authorized HYUNDAI dealer.**

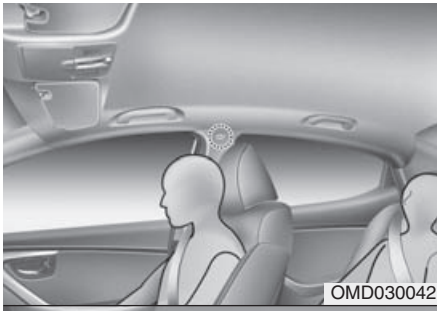
OMD030042

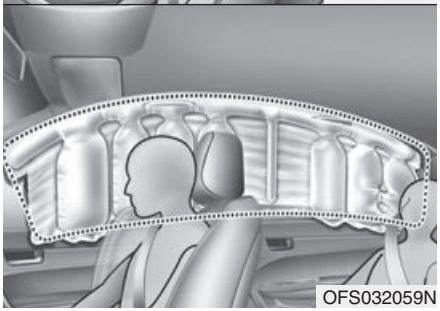
OFS032059N

Curtain air bag (if equipped)

Curtain air bags are located along both sides of the roof rails above the front and rear doors.

They are designed to help protect the heads of the front seat occupants and the rear outboard seat occupants in certain side impact collisions.

The curtain air bags are designed to deploy only during certain side impact collisions, depending on the crash severity, angle, speed and impact. The curtain air bags are not designed to deploy in all side impact situations, collisions from the front or rear of the vehicle or in most rollover situations.

⚠ WARNING

- **In order for side impact and curtain air bags to provide the best protection, both front seat occupants and both outboard rear occupants should sit in an upright position with the seat belts properly fastened.**

  Importantly, children should sit in a proper child restraint system in the rear seat.

(Continued)

(Continued)

- **When children are seated in the rear outboard seats, they must be seated in the proper child restraint system. Make sure to put the child restraint system as far away from the door side as possible, and secure the child restraint system in a locked position.**
- **Do not allow the passengers to lean their heads or bodies onto doors, put their arms on the doors, stretch their arms out of the window, or place objects between the doors and passengers when they are seated on seats equipped with side and/or curtain air bags.**
- **Never try to open or repair any components of the side curtain air bag system. We recommend that the system be serviced by an authorized HYUNDAI dealer.**

Failure to follow the above mentioned instructions can result in injury or death to the vehicle occupants in an accident.

Why didn't my air bag go off in a collision? (Inflation and non-inflation conditions of the air bag)

There are many types of accidents in which the air bag would not be expected to provide additional protection.

These include rear impacts, second or third collisions in multiple impact accidents, as well as low speed impacts.

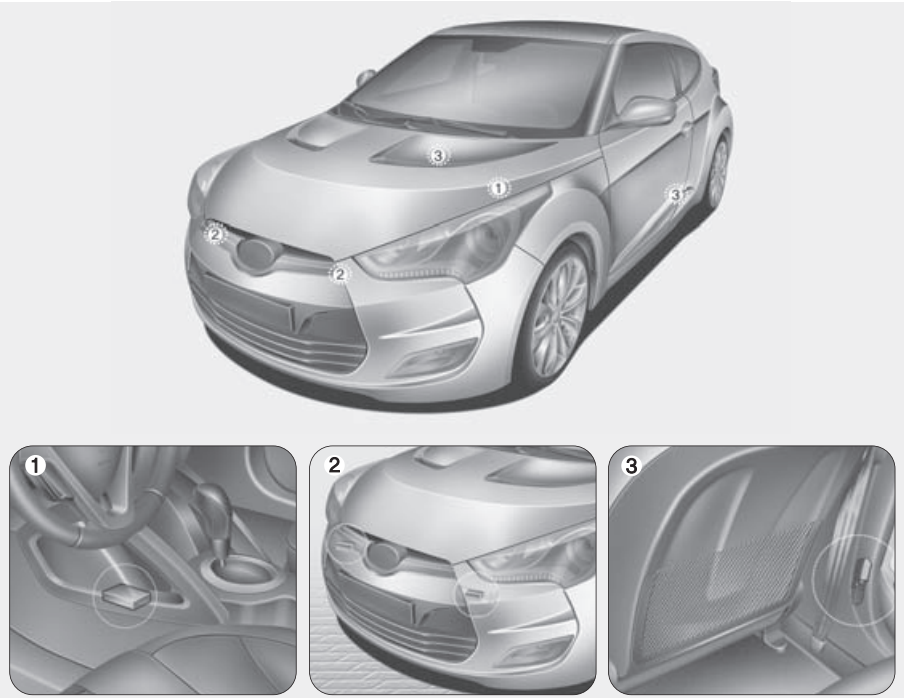

OFS031030/OFS031031/OFS031032/OMD030039

Air bag collision sensors

(1) SRS control module

(2) Front impact sensor

(3) Side impact sensor

⚠ WARNING

- **Do not hit or allow any objects to impact the locations where air bags or sensors are installed.**

  This may cause unexpected air bag deployment, which could result in serious personal injury or death.
- **If the installation location or angle of the sensors is altered in any way, the air bags may deploy when they should not or they may not deploy when they should, causing severe injury or death.**

  Therefore, do not try to perform maintenance on or around the air bag sensors. We recommend that the system be serviced by an authorized HYUNDAI dealer.

(Continued)

(Continued)

- **Problems may arise if the sensor installation angles are changed due to the deformation of the front bumper, body or B pillar where side collision sensors are installed. We recommend that the system be serviced by an authorized HYUNDAI dealer.**
- **Your vehicle has been designed to absorb impact and deploy the air bag(s) in certain collisions. Installing aftermarket bumper guards or replacing a bumper with non-genuine parts may adversely affect your vehicles collision and air bag deployment performance.**

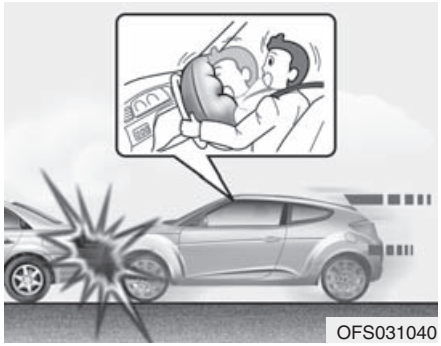

Air bag inflation conditions

Front air bags

Front air bags are designed to inflate in a frontal collision depending on the intensity, speed or angles of impact of the front collision.

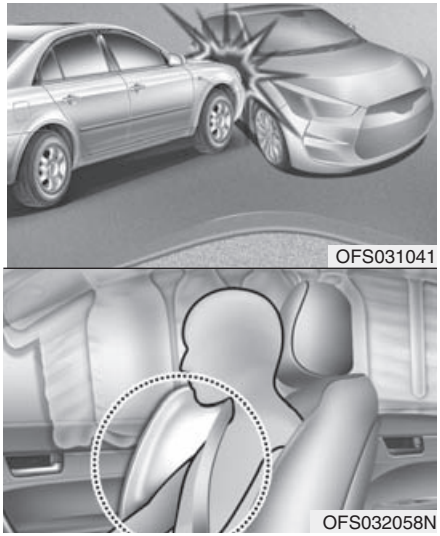

Side air bags

Side air bags (side impact and/or curtain air bags) are designed to inflate when an impact is detected by side collision sensors depending on the strength, speed or angles of impact resulting from a side impact collision.

Although the front air bags (driver's and front passenger's air bags) are designed to inflate only in frontal collisions, they also may inflate in other types of collisions if the front impact sensors detect a sufficient impact. Side air bags (side impact and/or curtain air bags) are designed to inflate only in side impact collisions, but they may inflate in other collisions if the side impact sensors detect a sufficient impact.

If the vehicle chassis is impacted by bumps or objects on unimproved roads or sidewalks, air bags may deploy. Drive carefully on unimproved roads or on surfaces not designed for vehicle traffic to prevent unintended air bag deployment.

Air bag non-inflation conditions

- In certain low-speed collisions the air bags may not deploy. The air bags are designed not to deploy in such cases because they may not provide benefits beyond the protection of the seat belts in such collisions.

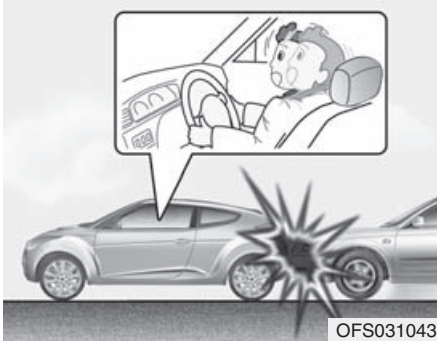
OFS031043

- Frontal air bags are not designed to inflate in rear collisions, because occupants are moved backward by the force of the impact. In this case, inflated air bags would not be able to provide any additional benefit.

OFS031044

- Front air bags may not inflate in side impact collisions, because occupants move to the direction of the collision, and thus in side impacts, frontal air bag deployment would not provide additional occupant protection.

  However, side impact or curtain air bags may inflate depending on the intensity, vehicle speed and angles of impact.

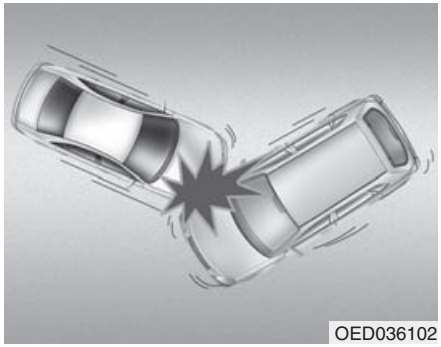
OED036102

- In a slant or angled collision, the force of impact may direct the occupants in a direction where the air bags would not be able to provide any additional benefit, and thus the sensors may not deploy any air bags.

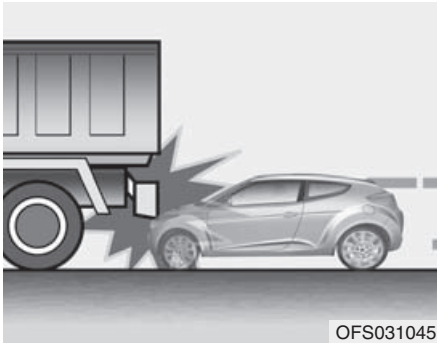
OFS031045

- Just before impact, drivers often brake heavily. Such heavy braking lowers the front portion of the vehicle causing it to “ride” under a vehicle with a higher ground clearance. Air bags may not inflate in this "under-ride" situation because deceleration forces that are detected by sensors may be significantly reduced by such “under-ride” collisions.

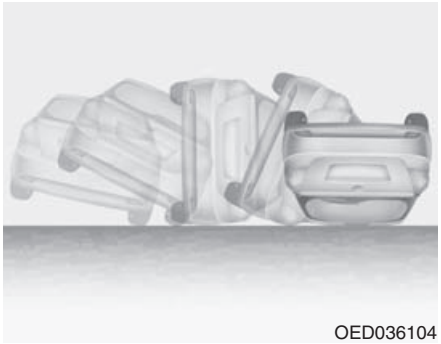
OED036104

- Air bags do not inflate in most rollover accidents, even though the vehicle is equipped with side impact air bags and curtain air bags.

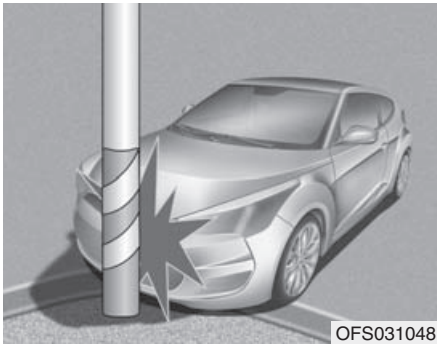
OFS031048

- Air bags may not inflate if the vehicle collides with objects such as utility poles or trees, where the point of impact is concentrated and the collision energy is absorbed by the vehicle structure.

SRS Care

The SRS is virtually maintenance-free and so there are no parts you can safely service by yourself. If the SRS air bag warning light does not illuminate when you turn the ignition ON, or if it continuously remains on, we recommend that the system be inspected by an authorized HYUNDAI dealer.

Improper handling of the SRS system may result in serious personal injury.

⚠ WARNING

- **Modification to SRS components or wiring, including the addition of any kind of badges to the pad covers or modifications to the body structure, can adversely affect SRS performance and lead to possible injury.**
- **For cleaning the air bag pad covers, use only a soft, dry cloth or one which has been moistened with plain water. Solvents or cleaners could adversely affect the air bag covers and proper deployment of the system.**
- **No objects should be placed over or near the air bag modules on the steering wheel, instrument panel, and the front passenger's panel above the glove box, because any such object could cause harm if the vehicle is in a crash severe enough to cause the air bags to inflate.**

(Continued)

(Continued)

- **If the air bags inflate, we recommend that the system be replaced by an authorized HYUNDAI dealer.**
- **Do not tamper with or disconnect SRS wiring, or other components of the SRS system. Doing so could result in injury, due to accidental inflation of the air bags or by rendering the SRS inoperative.**
- **If components of the air bag system must be discarded, or if the vehicle must be scrapped, certain safety precautions must be observed. An authorized HYUNDAI dealer knows these precautions and can give you the necessary information. Failure to follow these precautions and procedures could increase the risk of personal injury.**
- **If your car was flooded and has soaked carpeting or water on the flooring, you shouldn't try to start the engine; we recommend that you contact an authorized HYUNDAI dealer.**

Additional safety precautions

- **Never let passengers ride in the cargo area or on top of a folded-down back seat.** All occupants should sit upright, fully back in their seats with their seat belts on and their feet on the floor.
- **Passengers should not move out of or change seats while the vehicle is moving.** A passenger who is not wearing a seat belt during a crash or emergency stop can be thrown against the inside of the vehicle, against other occupants, or out of the vehicle.
- **Each seat belt is designed to restrain one occupant.** If more than one person uses the same seat belt, they could be seriously injured or killed in a collision.
- **Do not use any accessories on seat belts.** Devices claiming to improve occupant comfort or reposition the seat belt can reduce the protection provided by the seat belt and increase the chance of serious injury in a crash.
- **Passengers should not place hard or sharp objects between themselves and the air bags.** Carrying hard or sharp objects on your lap or in your mouth can result in injuries if an air bag inflates.
- **Keep occupants away from the air bag covers.** All occupants should sit upright, fully back in their seats with their seat belts on and their feet on the floor. If occupants are too close to the air bag covers, they could be injured if the air bags inflate.
- **Do not attach or place objects on or near the air bag covers.** Any object attached to or placed on the front or side impact air bag covers could interfere with the proper operation of the air bags.
- **Do not modify the front seats.** Modification of the front seats could interfere with the operation of the supplemental restraint system sensing components or side impact air bags.
- **Do not place items under the front seats.** Placing items under the front seats could interfere with the operation of the supplemental restraint system sensing components and wiring harnesses.
- **Never hold an infant or child on your lap.** The infant or child could be seriously injured or killed in the event of a crash. All infants and children should be properly restrained in appropriate child safety seats or seat belts in the rear seat.

⚠ WARNING

- **Sitting improperly or out of position can cause occupants to be shifted too close to a deploying air bag, strike the interior structure or be thrown from the vehicle resulting in serious injury or death.**
- **Always sit upright with the seatback in an upright position, centered on the seat cushion with your seat belt on, legs comfortably extended and your feet on the floor.**

Adding equipment to or modifying your air bag-equipped vehicle

If you modify your vehicle by changing your vehicle's frame, bumper system, front end or side sheet metal or ride height, this may affect the operation of your vehicle's air bag system.

■ Type A

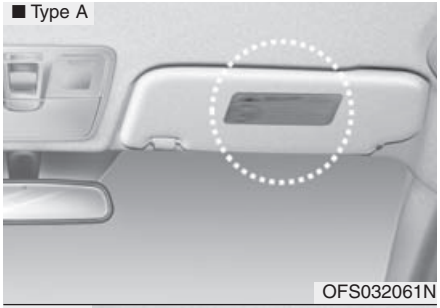

OFS032061N

■ Type B

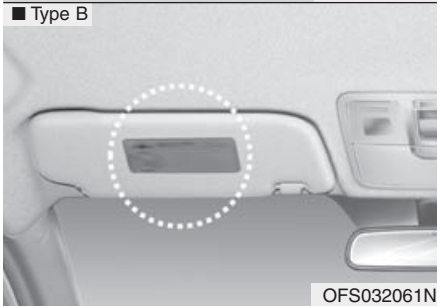

OFS032061N

Air bag warning label

Air bag warning label is attached to alert the passengers of potential risk of the air bag system.
Note that these government warnings focus on the risk of children, we also want you to be aware of the risks which adults are exposed to that have been described in previous pages.

Keys / 4-2
Remote keyless entry / 4-5
Smart key / 4-8
Theft-alarm system / 4-12
Door locks / 4-14
Tailgate / 4-19
Windows / 4-22
Hood / 4-27
Fuel filler lid / 4-29

Features of your vehicle

4

Panorama sunroof / 4-32
Steering wheel / 4-36
Mirrors / 4-39
Instrument cluster / 4-42
Rear parking assist system / 4-68
Rearview camera / 4-72
Hazard warning flasher / 4-73
Lighting / 4-74
Wipers and washers / 4-81
Interior light / 4-85
Defroster / 4-88
Manual climate control system / 4-89
Automatic climate control system / 4-98
Windshield defrosting and defogging / 4-106
Storage compartment / 4-110
Interior features / 4-112
Audio system / 4-118

KEYS

Record your key number

The key code number is stamped on the key code tag attached to the key set. Should you lose your keys, we recommend that you contact an authorized HYUNDAI dealer. Remove the key code tag and store it in a safe place. Also, record the code number and keep it in a safe and handy place, but not in the vehicle.

■ Type A

OFD047001-B

■ Type B

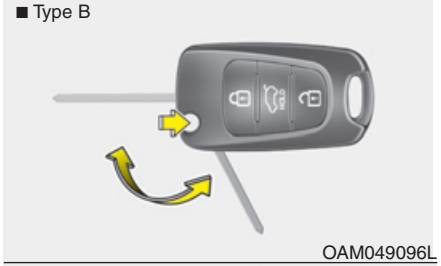

OAM049096L

■ Type C

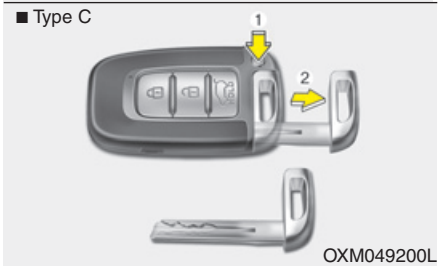

OXM049200L

Key operations

- Used to start the engine.
- Used to lock and unlock the doors.

Type B

To unfold the key, press the release button then the key will unfold automatically.

To fold the key, fold the key manually while pressing the release button.

> ⚠ **CAUTION**
>
> ***Do not fold the key without pressing the release button. This may damage the key.***

Type C

To remove the mechanical key, press and hold the release button and remove the mechanical key.

To reinstall the mechanical key, put the key into the hole and push it until a click sound is heard.

⚠ WARNING - Ignition key (Smart key)

Leaving children unattended in a vehicle with the ignition key (smart key) is dangerous even if the key is not in the ignition switch or the ENGINE START/STOP button is ACC or ON position. Children copy adults and they could place the key in the ignition switch or press the ENGINE START/STOP button.

The ignition key (smart key) would enable children to operate power windows or other controls, or even make the vehicle move, which could result in serious bodily injury or even death. Never leave the keys in your vehicle with unsupervised children, when the engine is running.

⚠ WARNING

We recommend that you use parts for replacement from an authorized HYUNDAI dealer. If an aftermarket key is used, the ignition switch may not return to ON after START. If this happens, the starter will continue to operate causing damage to the starter motor and possible fire due to excessive current in the wiring.

Immobilizer system

Your vehicle may be equipped with an electronic engine immobilizer system to reduce the risk of unauthorized vehicle use.

Your immobilizer system is comprised of a small transponder in the ignition key and electronic devices inside the vehicle.

With the immobilizer system, whenever you insert your ignition key into the ignition switch and turn it to ON, it checks and determines and verifies if the ignition key is valid or not.

If the key is determined to be valid, the engine will start.

If the key is determined to be invalid, the engine will not start.

To deactivate the immobilizer system:

Insert the ignition key into the key cylinder and turn it to the ON position.

To activate the immobilizer system:

Turn the ignition key to the OFF position. The immobilizer system activates automatically. Without a valid ignition key for your vehicle, the engine will not start.

⚠ WARNING

In order to prevent theft of your vehicle, do not leave spare keys anywhere in your vehicle. Your immobilizer password is a customer unique password and should be kept confidential. Do not leave this number anywhere in your vehicle.

✻ NOTICE

When starting the engine, do not use the key with other immobilizer keys around. Otherwise the engine may not start or may stop soon after it starts. Keep each key separately in order to avoid a starting malfunction.

⚠ CAUTION

Do not put metal accessories near the ignition switch. Metal accessories may interrupt the transponder signal and may prevent the engine from being started.

✻ NOTICE

We recommend that you consult an authorized HYUNDAI dealer.

⚠ CAUTION

The transponder in your ignition key is an important part of the immobilizer system. It is designed to give years of trouble-free service, however you should avoid exposure to moisture, static electricity and rough handling. Immobilizer system malfunction could occur.

⚠ CAUTION

Do not change, alter or adjust the immobilizer system because it could cause the immobilizer system to malfunction.We recommend that the system be serviced by an authorized HYUNDAI dealer.

Malfunctions caused by improper alterations, adjustments or modifications to the immobilizer system are not covered by your vehicle manufacturer warranty.

REMOTE KEYLESS ENTRY (IF EQUIPPED)

■ Type A

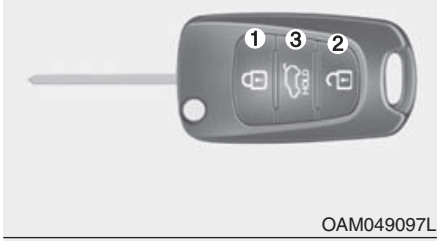

OAM049097L

■ Type B

OXM049001L

Remote keyless entry system operations

Lock (1)

All doors (and tailgate) are locked if the lock button is pressed.
If all doors are closed, the hazard warning lights blink once to indicate that all doors (and tailgate) are locked. If any door (or tailgate) is opened when the lock button is pressed, all doors will not lock.

Unlock (2)

All doors (and tailgate) are unlocked if the unlock button is pressed.
The hazard warning lights will blink twice to indicate that all doors (and tailgate) are unlocked.
After depressing this button, the doors (and tailgate) will lock automatically unless you open any door within 30 seconds.

Tailgate unlock (3, if equipped)

The tailgate is unlocked if the button is pressed for more than 1 second.
The hazard warning lights will blink twice to indicate that the tailgate is unlocked.
After pressing this button, the tailgate will lock automatically unless you open the tailgate within 30 seconds.
Also, once the tailgate is opened and then closed, the tailgate will lock automatically.

❈ The word “HOLD” is written on the button to inform you that you must press and hold the button for 1 second.

Transmitter precautions

✻ NOTICE

The transmitter may not work if any of following occur:

- **The ignition key is in ignition switch.**
- **You exceed the operating distance limit (about 10 m [30 feet]).**
- **The battery in the transmitter is weak.**
- **Other vehicles or objects may be blocking the signal.**
- **The weather is extremely cold.**
- **The transmitter is close to a radio transmitter such as a radio station or an airport which can interfere with normal operation of the transmitter.**

When the transmitter does not work properly, open and close the door with the ignition key. If you have a problem with the transmitter, we recommend that you contact an authorized HYUNDAI dealer.

(Continued)

(Continued)

- **If the transmitter is in close proximity to your cell phone or smart phone, the signal from the transmitter could be blocked by normal operation of your cell phone or smart phone. This is especially important when the phone is active such as making call, receiving calls, text messaging, and/or sending/receiving emails. Avoid placing the transmitter and your cell phone or smart phone in the same pants or jacket pocket and maintain adequate distance between the two devices.**

⚠ CAUTION

Keep the transmitter away from water or any liquid. If the keyless entry system is inoperative due to exposure to water or liquids, it will not be covered by your manufacturer vehicle warranty.

⚠ CAUTION

Changes or modifications not expressly approved by the party responsible for compliance could void the user's authority to operate the equipment. If the keyless entry system is inoperative due to changes or modifications not expressly approved by the party responsible for compliance, it will not be covered by your manufacturer's vehicle warranty.

⚠ CAUTION

Keep the transmitter away from electromagnetic materials that blocks electromagnetic waves to the key surface.

Battery replacement

The transmitter uses a 3 volt lithium battery which will normally last for several years. When replacement is necessary, use the following procedure.

1. Insert a slim tool into the slot and gently pry open the transmitter center cover (1).
2. Replace the battery with a new one. When replacing the battery, make sure the battery position.
3. Install the rear cover.

For transmitter replacement, we recommend that you contact an authorized HYUNDAI dealer.

⚠ CAUTION

- ***The keyless entry system transmitter is designed to give you years of trouble-free use, however it can malfunction if exposed to moisture or static electricity.If you are unsure how to use your transmitter or replace the battery, we recommend that you contact an authorized HYUNDAI dealer.***
- ***Using the wrong battery can cause the transmitter to malfunction. Be sure to use the correct battery.***
- ***To avoid damaging the transmitter, don't drop it, get it wet, or expose it to heat or sunlight.***

⚠ CAUTION

An inappropriately disposed battery can be harmful to the environment and human health.
Dispose the battery according to your local law(s) or regulation.

SMART KEY (IF EQUIPPED)

With a smart key, you can lock or unlock the doors (and tailgate) and even start the engine without inserting the key.

The functions of the buttons on a smart key are similar to the remote keyless entry. (Refer to the “Remote keyless entry” in this section.)

Smart key functions

Carrying the smart key, you may lock and unlock the vehicle doors (and tailgate). Also, you may start the engine. Refer to the following, for more details.

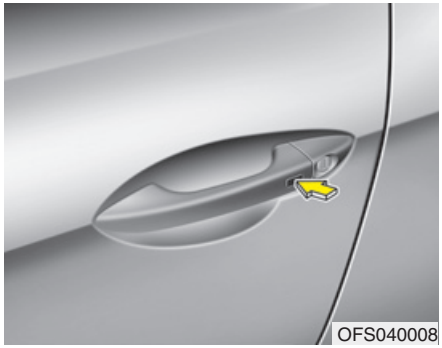

Locking

Pressing the button of the front outside door handles with all doors (and tailgate) closed and any door unlocked, locks all the doors (and tailgate). The hazard warning lights will blink once to indicate that all doors (and tailgate) are locked. The button will only operate when the smart key is within 0.7 m (28 in.) from the outside door handle. If you want to make sure that a door has locked or not, you should check if indicator on the central door lock/unlock switch has illuminated or pull the outside door handle.

Even though you press the button, the doors will not lock and the chime will sound if any of the following occurs:

- The smart key is in the vehicle.
- The ENGINE START/STOP button is in the ACC or ON position.
- Any door except the tailgate is opened.

Unlocking

Pressing the button of the front outside door handles with all doors (and tailgate) closed and locked, unlocks all the doors (and tailgate). The hazard warning lights will blink twice to indicate that all doors (and tailgate) are unlocked. The button will only operate when the smart key is within 0.7 m (28 in.) from the outside door handle.

When the smart key is recognized in the area of 0.7 m (28 in.) from the front outside door handle, other people can also open a door without possession of the smart key.

Tailgate unlocking

If you are within 0.7 m (28 in.) from the outside tailgate handle, with your smart key in possession, the tailgate will unlock and open when you press the tailgate handle switch.

The hazard warning lights will blink twice to indicate that the tailgate is unlocked.

Also, once the tailgate is opened and then closed, the tailgate will lock automatically.

Start-up

You can start the engine without inserting the key. For detailed information refer to “Starting the engine with a smart key” in section 5.

Smart key precautions

✻ NOTICE

- **If, for some reason, you happen to lose your smart key, you will not be able to start the engine. Tow the vehicle, if necessary, we recommend that you contact an authorized HYUNDAI dealer.**
- **A maximum of 2 smart keys can be registered to a single vehicle. If you lose a smart key, we recommend that you contact an authorized HYUNDAI dealer.**
- **The smart key will not work if any of the following occurs:**
  - **The smart key is close to a radio transmitter such as a radio station or an airport which can interfere with normal operation of the smart key.**
  - **The smart key is near a mobile two-way radio system or a cellular phone.**
  - **Another vehicle’s smart key is being operated close to your vehicle.**

  When the smart key does not work properly, open and close the door with the mechanical key. If you have a problem with the smart key, we recommend that you contact an authorized HYUNDAI dealer.

(Continued)

(Continued)

- **If the smart key is in close proximity to your cell phone or smart phone, the signal from the smart key could be blocked by normal operation of your cell phone or smart phone. This is especially important when the phone is active such as making call, receiving calls, text messaging, and/or sending/receiving emails. Avoid placing the smart key and your cell phone or smart phone in the same pants or jacket pocket and maintain adequate distance between the two devices.**

⚠ CAUTION

Keep the smart key away from water or any liquid. If the keyless entry system is inoperative due to exposure to water or liquids, it will not be covered by your manufacturer’s vehicle warranty.

⚠ CAUTION

Keep the smart key away from electromagnetic materials that blocks electromagnetic waves to the key surface.

OHM048005

Battery replacement

A smart key battery should last for several years, but if the smart key is not working properly, try to replace the battery with a new one. If you are unsure how to use your smart key or replace the battery, we recommend that you contact an authorized HYUNDAI dealer.

✻ NOTICE

The circuit inside the smart key can have a problem if exposed to moisture or static electricity. If you are unsure how to use your smart key or replace the battery, we recommend that you contact an authorized HYUNDAI dealer.

1. Pry open the rear cover of the smart key.
2. Replace the battery with a new battery (CR2032). When replacing the battery, make sure the battery position.
3. Install the rear cover.

✻ NOTICE

- **Using the wrong battery can cause the smart key to malfunction. Be sure to use the correct battery.**
- **Circuits inside the smart key may develop problems when dropped, exposed to moisture or static electricity.**
- **If you suspect that your smart key might have sustained some damage, or you feel your smart key is not working correctly, we recommend that you contact an authorized HYUNDAI dealer.**

⚠ CAUTION

An inappropriately disposed battery can be harmful to the environment and human health.

Dispose the battery according to your local law(s) or regulation.

Immobilizer system

Your vehicle is equipped with an electronic engine immobilizer system to reduce the risk of unauthorized vehicle use.

Your immobilizer system is comprised of a small transponder in the smart key and electronic devices inside the vehicle.

With the immobilizer system, whenever you turn the engine start/stop button to the ON position by pressing the button while carrying the smart key, it checks and determines and verifies if the smart key is valid or not.

If the key is determined to be valid, the engine will start.

If the key is determined to be invalid, the engine will not start.

To deactivate the immobilizer system:

Turn the engine start/stop button to the ON position by pressing the button while carrying the smart key.

To activate the immobilizer system:

Turn the engine start/stop button to the OFF position. The immobilizer system activates automatically. Without a valid smart key for your vehicle, the engine will not start.

⚠ WARNING

In order to prevent theft of your vehicle, do not leave spare keys anywhere in your vehicle. Your Immobilizer password is a customer unique password and should be kept confidential. Do not leave this number anywhere in your vehicle.

✻ NOTICE

When starting the engine, do not use the key with other immobilizer keys around. Otherwise the engine may not start or may stop soon after it starts. Keep each key separate in order to avoid a starting malfunction.

⚠ CAUTION

Do not put metal accessories near the smart key.

The engine may not start because the metal accessories may interrupt the transponder signal from transmitting normally.

✻ NOTICE

We recommend that you consult an authorized HYUNDAI dealer.

⚠ CAUTION

The transponder in your smart key is an important part of the immobilizer system. It is designed to give years of trouble-free service, however you should avoid exposure to moisture, static electricity and rough handling. Immobilizer system malfunction could occur.

⚠ CAUTION

Do not change, alter or adjust the immobilizer system because it could cause the immobilizer system to malfunction.We recommend that the system be serviced by an authorized HYUNDAI dealer.

Malfunctions caused by improper alterations, adjustments or modifications to the immobilizer system are not covered by your vehicle manufacturer warranty.

THEFT-ALARM SYSTEM (IF EQUIPPED)

Vehicles equipped with a theft alarm system will have a label attached to the vehicle with the following words:
1. WARNING
2. SECURITY SYSTEM

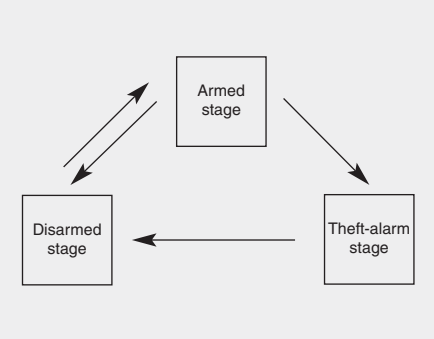

This system is designed to provide protection from unauthorized entry into the car. This system is operated in three stages: the first is the "Armed" stage, the second is the "Theft-alarm" stage, and the third is the "Disarmed" stage. If triggered, the system provides an audible alarm with blinking of the hazard warning lights.

Armed stage

Park the car and stop the engine. Arm the system as described below.

1. Remove the ignition key from the ignition switch and exit the vehicle.
2. Make sure that all doors (and tailgate) and the engine hood are closed and latched.
3. Lock the doors using the transmitter of the keyless entry system.

After completion of the steps above, the hazard warning lights will blink once to indicate that the system is armed.

If any door (or tailgate) or engine hood remains open, the hazard warning lights will not blink and the theft-alarm will not arm. If all doors (and tailgate) and engine hood are closed after the lock button is pressed, the hazard warning lights blink once.

Do not arm the system until all passengers have left the vehicle. If the system is armed while a passenger(s) remains in the vehicle, the alarm may be activated when the remaining passenger(s) leave the vehicle. If any door (or tailgate) or engine hood is opened within 30 seconds after the system enters the armed stage, the system is disarmed to prevent unnecessary alarm.

Theft-alarm stage

The alarm will be activated if any of the following occurs while the system is armed.

- A front or rear door is opened without using the transmitter (or smart key).
- The tailgate is opened without using the transmitter (or smart key).
- The engine hood is opened.

The horn will sound and the hazard warning lights will blink continuously for 27 seconds, unless the system is disarmed. To turn off the system, unlock the doors with the transmitter (or smart key).

Disarmed stage

The system will be disarmed when:

Transmitter

- The door unlock button is pressed.
- The engine is started. (within 3 seconds)
- The ignition switch is in the “ON” position for 30 seconds or more.

Smart key

- The door unlock button is pressed.
- The button of the front outside door is pressed while carrying the smart key.
- The engine is started. (within 3 seconds)

After the doors are unlocked, the hazard warning lights will blink twice to indicate that the system is disarmed.

After pressing the unlock button, if any door (or tailgate) is not opened within 30 seconds, the system will be rearmed.

✻ NOTICE - Theft-alarm system

- **If the system is not disarmed with the transmitter, insert the key into the ignition switch and start the engine. Then the system will be disarmed.**
- **We recommend that you consult an authorized HYUNDAI dealer.**

⚠ CAUTION

Do not change, alter or adjust the immobilizer system because it could cause the theft-alarm system to malfunction. We recommend that the system be serviced by an authorized HYUNDAI dealer.

Malfunctions caused by improper alterations, adjustments or modifications to the theft-alarm system are not covered by your vehicle manufacturer’s warranty.

DOOR LOCKS

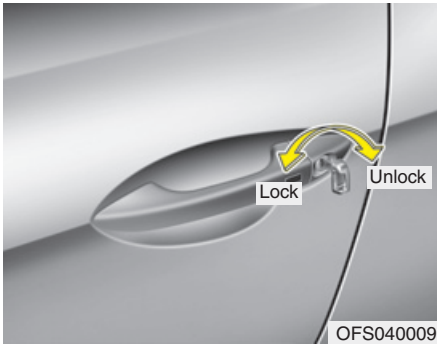

Operating door locks from outside the vehicle

- Turn the key toward the rear of the vehicle to unlock and toward the front of the vehicle to lock.
- If you lock/unlock the door with a key, all vehicle doors will lock/unlock automatically. (if equipped)
- Doors can also be locked and unlocked with the transmitter or smart key. (if equipped)
- Once the doors are unlocked, they may be opened by pulling the door handle.
- When closing the door, push the door by hand. Make sure that doors are closed securely.

✻ NOTICE

- **In cold and wet climates, door lock and door mechanisms may not work properly due to freezing conditions.**
- **If the door is locked/unlocked multiple times in rapid succession with either the vehicle key or door lock switch, the system may stop operating temporarily in order to protect the circuit and prevent damage to system components.**

⚠ WARNING

- **If you don't close the door securely, the door may open again.**
- **Be careful that someone's body and hands are not trapped when closing the door.**

In case of an emergency

If the power door lock switch does not operate electrically, the only way to lock the door(s) is with the ignition key from the outside key hole.

Doors without the outside key hole, you can lock the door as follows:

1. Open the door.
2. Lock doors by pushing each lock button.
3. Close the door securely.

Once the tailgate is closed when the power door lock switch does not operate electrically, you will not be able to open the tailgate.

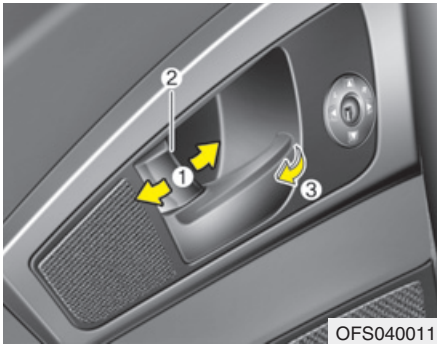

OFS040011

Operating door locks from inside the vehicle

- To unlock a door, push the door lock button (1) to the “Unlock” position. The red mark (2) on the door lock button will be visible.
- To lock a door, push the door lock button (1) to the “Lock” position. If the door is locked properly, the red mark (2) on the door lock button will not be visible.
- To open a door, pull the door handle (3) outward.
- The front door cannot be locked if the ignition key is in the ignition switch and the door is opened. (if equipped)
- A door cannot be locked if the smart key is in the vehicle and any door is opened.

Inside handle override (Front door, if equipped)

If the inner door handle is pulled when the door is locked, the door will unlock and open.

⚠ WARNING - Door lock malfunction

If a power door lock ever fails to function while you are in the vehicle, try one or more of the following:

- **Operate the other door locks and handles.**
- **Lower the driver’s window and use the key to unlock the door from outside.**
- **Move to the cargo area and open the tailgate.**

OFS040012

With central door lock switch (if equipped)

Operate by pressing the central door lock switch.

- When pushing down on the front portion (1) of the switch, all vehicle doors will lock.
- When pushing down on the rear portion (2) of the switch, all vehicle doors will unlock.
- If the key is in the ignition switch and front door is opened, the doors will not lock even though the front portion (1) of central door lock switch is pressed.
- If the smart key is in the vehicle and any door is opened, the doors will not lock even though the front portion(1) of central door lock switch is pressed.

✻ NOTICE

If the doors are locked with the transmitter or smart key, the doors cannot be unlocked with the central door lock/ unlock switch. (if equipped)

⚠ WARNING - Doors

- **The doors should always be fully closed and locked while the vehicle is in motion to prevent accidental opening of the door. Locked doors will also discourage potential intruders when the vehicle stops or slows.**
- **Be careful when opening doors and watch for vehicles, motorcycles, bicycles or pedestrians approaching the vehicle in the path of the door. Opening a door when something is approaching can cause damage or injury.**

⚠ WARNING - Unlocked vehicles

Leaving your vehicle unlocked can invite theft or possible harm to you or others from someone hiding in your vehicle while you are gone. Always remove the ignition key, engage the parking brake, close all windows and lock all doors when leaving your vehicle unattended.

⚠ WARNING - Unattended children

An enclosed vehicle can become extremely hot, causing death or severe injury to unattended children or animals who cannot escape the vehicle. Furthermore, children might operate features of the vehicle that could injure them, or they could encounter other harm, possibly from someone gaining entry to the vehicle. Never leave children or animals unattended in your vehicle.

Impact sensing door unlock system (if equipped)

All doors will automatically unlock when an impact causes the air bags to deploy.

Speed sensing door lock system (if equipped)

All doors will automatically lock after the vehicle speed exceeds 15 km/h.

For deactivation of this feature, we recommend that you contact an authorized HYUNDAI dealer.

Engine off door unlock system (if equipped)

All doors will be automatically unlock:

Without smart key system

When the key is removed from the ignition switch.

With smart key system

When the ENGINE START/STOP button is in the OFF position.

For deactivation of this feature, we recommend that you contact an authorized HYUNDAI dealer.

Deadlock system (if equipped)

Some vehicles are equipped with a deadlock system. Deadlocks prevent opening a door from either inside or outside the vehicle once the deadlocks have been activated providing an additional measure of vehicle security.

To lock the vehicle by using the deadlock function, the doors must be locked by using the transmitter or the smart key. To unlock the vehicle, the transmitter or smart key must be used again.

⚠ WARNING

Do not lock the doors with the transmitter or smart key with anybody left in the vehicle. The passenger in the vehicle cannot unlock the doors. For example, if the door is locked with the transmitter, the passenger in the vehicle cannot unlock the door without the transmitter.

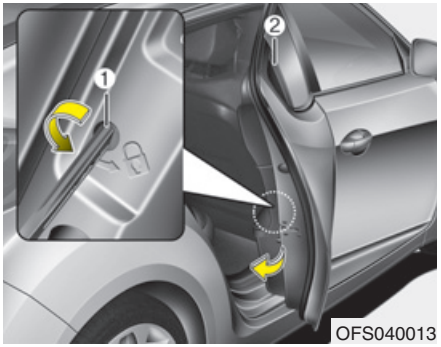

OFS040013

Child-protector rear door lock

The child safety lock is provided to help prevent children from accidentally opening the rear doors from inside the vehicle. The rear door safety locks should be used whenever children are in the vehicle.

1. Open the rear door.
2. Turn the child safety lock located on the rear edge of the door to the lock (🔒) position (1). When the child safety lock is in the lock position, the rear door will not open even though the inner door handle is pulled.

3. Close the rear door.

To open the rear door, pull the outside door handle (2).

Even though the doors may be unlocked, the rear door will not open by pulling the inner door handle until the rear door child safety lock is unlocked.

⚠ WARNING - Rear door locks

If children accidentally open the rear doors while the vehicle is in motion, they could fall out and be severely injured or killed. To prevent children from opening the rear doors from inside, the rear door safety locks should be used whenever children are in the vehicle.

TAILGATE

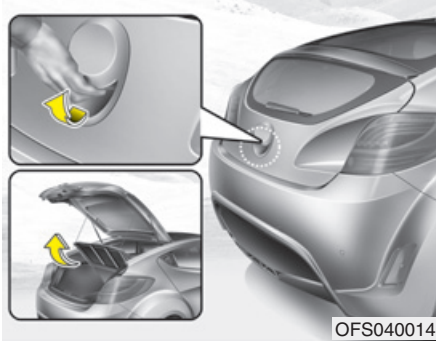
OFS040014

Opening the tailgate

- The tailgate is locked or unlocked when all doors are locked or unlocked with the key, transmitter, smart key or central door lock/unlock switch.
- When all doors are lock if the tailgate unlock button on the smart key is pressed for more than 1 second, the tailgate is unlocked. Once the tailgate is opened and then closed, the tailgate is locked automatically.

  If unlocked, the tailgate can be opened by pressing the handle and pulling it up.

✻ NOTICE

- **In cold and wet climates door lock and door mechanisms may not work properly due to freezing conditions.**
- **When jacking up the vehicle to change a tire or repair the vehicle, do not operate the tailgate. This could cause the tailgate to close improperly.**

⚠ CAUTION

Do not put any heavy object on the covering shelf. It may damage the covering shelf.

⚠ WARNING

- **Do not put any object on the covering shelf. If the vehicle suddenly stops or makes a curve, the object may injure passengers.**
- **Watch out for the edge of the covering shelf, when you are using the luggage room. You may injure yourself.**
- **While operating the engine or when you turn off the engine, be careful not to damage when you open the tailgate. The bumper may be heated by exhaust gas**

OFS040015

Closing the tailgate

To close the tailgate, lower and push down the tailgate firmly. Make sure that the tailgate is securely latched.

⚠ WARNING - Exhaust fumes

If you drive with the tailgate open, you will draw dangerous exhaust fumes into your vehicle which can cause serious injury or death to vehicle occupants.

If you must drive with the tailgate open, keep the air vents and all windows open so that additional outside air comes into the vehicle.

⚠ WARNING - Rear cargo area

Occupants should never ride in the rear cargo area where no restraints are available. To avoid injury in the event of an accident or sudden stops, occupants should always be properly restrained.

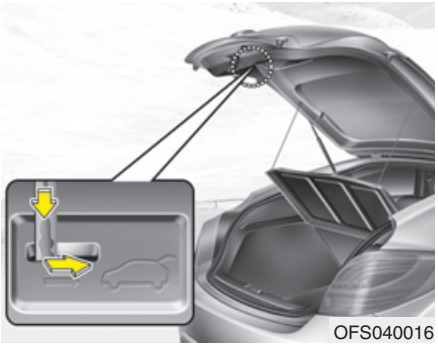
OFS040016

Emergency tailgate safety release

Your vehicle is equipped with the emergency tailgate safety release located on the bottom of the tailgate. When someone is inadvertently locked in the luggage compartment, the tailgate can be opened by inserting the key or screw driver to hole and pushing the tailgate.

⚠ WARNING

- **For emergency, be fully aware of the location of the emergency tailgate safety release lever in this vehicle and how to open the tailgate if you are accidentally locked in the luggage compartment.**
- **No one should be allowed to occupy the luggage compartment of the vehicle at any time. The luggage compartment is a very dangerous location in the event of a crash.**
- **Use the emergency tailgate safety release for emergency only. Use extreme caution, especially while the vehicle is in motion.**

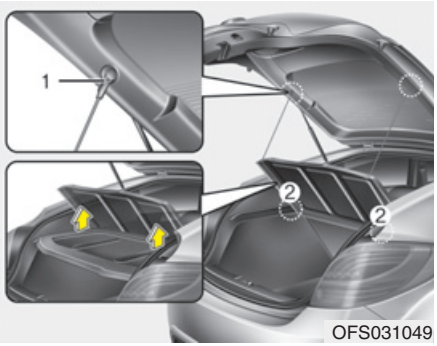

Shelf disassembly and installment

1. Disassemble the wires(1) connected to left and right fixed hook.
2. Push the shelf(2) up and disassemble the shelf.
3. To install the shelf, push the shelf down at original position and fix the wire to position(1).

⚠ CAUTION

When you close the tailgate, check the shelf position. Be careful not to collide the shelf and tailgate. If not, the shelf may be damaged.

WINDOWS

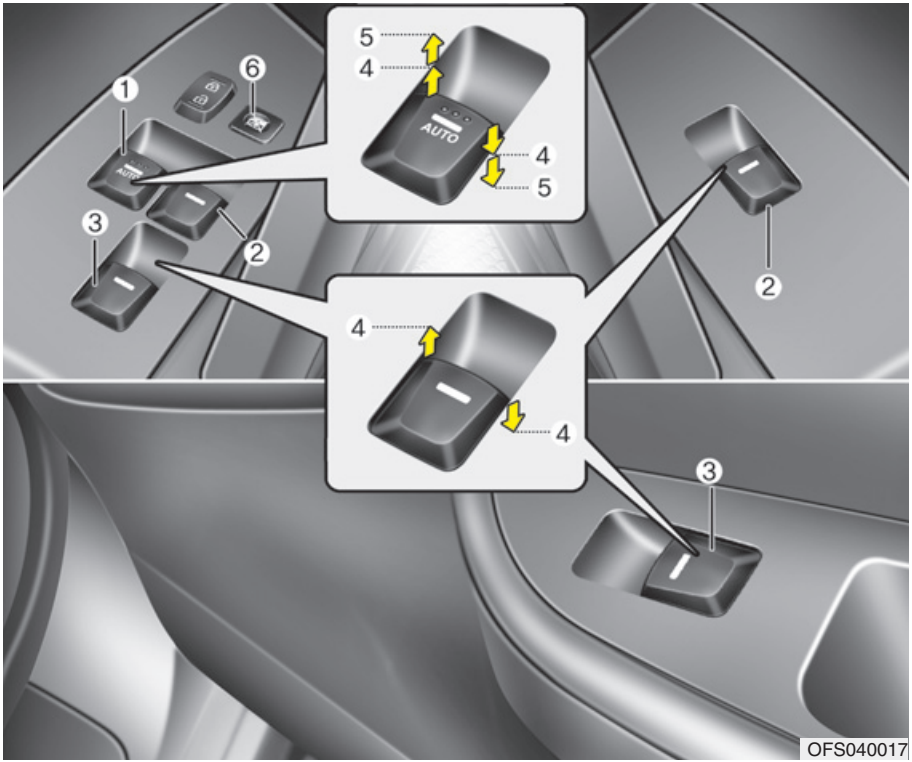

(1) Driver's door power window switch
(2) Front passenger's door power window switch
(3) Rear door (right) power window switch
(4) Window opening and closing
(5) Automatic power window*
(6) Power window lock switch

* if equipped

✻ NOTICE

In cold and wet climates, power windows may not work properly due to freezing conditions.

Power windows

The ignition switch must be in the ON position for power windows to operate.

Each door has a power window switch that controls the door's window. The driver has a master power window switch that controls all the windows in the vehicle. Also, a power window lock switch which that can block the operation of rear passenger windows. The power windows can be operated for approximately 30 seconds after the ignition key is removed or turned to the ACC or LOCK position. However, if the front doors are opened, the power windows cannot be operated within the 30 seconds period.

✻ NOTICE

While driving with the rear windows down or with the sunroof (if equipped) opened (or partially opened), your vehicle may demonstrate a wind buffeting or pulsation noise. This noise is a normal occurrence and can be reduced or eliminated by taking the following actions. If the noise occurs with one or both of the rear windows down, partially lower both front windows approximately 1 inch. If you experience the noise with the sunroof open, slightly reduce the size of the sunroof opening

■ Type A

OFS040018

Window opening and closing

Type A

To open or close a window, press down or pull up the front portion of the corresponding switch to the first detent position (4).

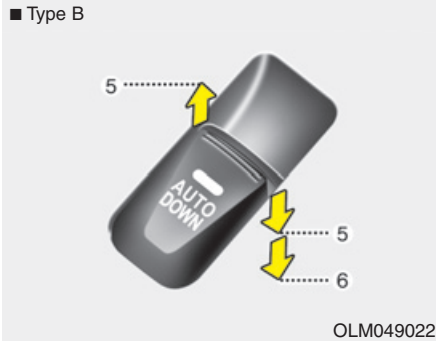

Type B - Auto down window (if equipped)

Pressing the power window switch momentarily to the second detent position (6) completely lowers the window even when the switch is released. To stop the window at the desired position while the window is in operation, pull up the switch momentarily to the opposite direction of the window movement.

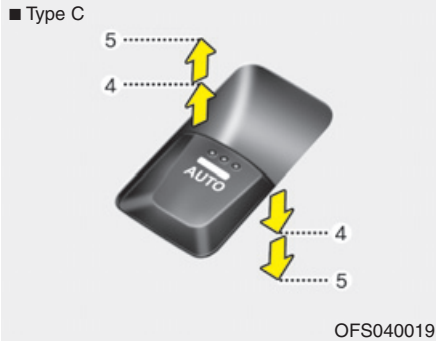

Type C - Auto up/down window (if equipped)

Pressing or pulling up the power window switch momentarily to the second detent position (5) completely lowers or lifts the window even when the switch is released. To stop the window at the desired position while the window is in operation, pull up or press down and release the switch.

If the power window does not operate normally, the automatic power window system must be reset as follows:

1. Turn the ignition switch to the ON position.
2. Close the window and continue pulling up the power window switch for at least 1 second after the window is completely closed.

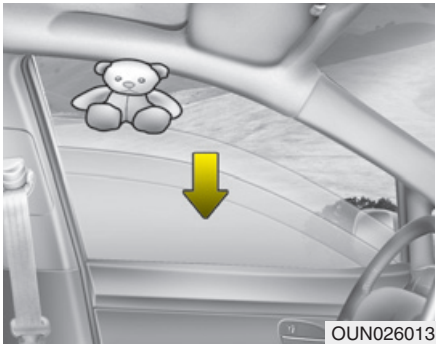

Automatic reversal (if equipped)

If the upward movement of the window is blocked by an object or part of the body, the window will detect the resistance and will stop upward movement. The window will then lower approximately 30 cm (11.8 in.) to allow the object to be cleared.

If the window detects the resistance while the power window switch is pulled up continuously, the window will stop upward movement then lower approximately 2.5 cm (1 in.). And if the power window switch is pulled up continuously again within 5 seconds after the window is lowered by the automatic window reversal feature, the automatic window reversal will not operate.

✻ NOTICE

The automatic reverse feature for the window is only active when the "auto up" feature is used by fully pulling up the switch. The automatic reverse feature will not operate if the window is raised using the halfway position on the power window switch.

⚠ WARNING

Always check for obstructions before raising any window to avoid injuries or vehicle damage. If an object less than 4 mm (0.16 in.) in diameter is caught between the window glass and the upper window channel, the automatic reverse window may not detect the resistance and will not stop and reverse direction.

Power window lock switch

For Europe

The driver can disable the power window switches on the rear passengers' doors by pressing the power window lock switch to the lock position (pressed).

When the power window lock switch is pressed :

- The driver's master control can operate the front passenger's power window but cannot operate the rear passengers' power windows.
- The front passenger's control can operate the front passenger's power window.
- The rear passengers' control cannot operate the rear passengers' power window.

Except Europe

The driver can disable the power window switches on the front and rear passengers' doors by pressing the power window lock switch to lock position (pressed).

When the power window lock switch is pressed, the driver's master control cannot operate the front and rear passengers' power windows.

⚠ CAUTION

- ***To prevent possible damage to the power window system, do not open or close two windows or more at the same time. This will also ensure the longevity of the fuse.***
- ***Never try to operate the main switch on the driver's door and the individual door window switch in opposite directions at the same time. If this is done, the window will stop and cannot be opened or closed.***

⚠ WARNING - Windows

- **NEVER leave the keys in your vehicle with unsupervised children, when the engine is running.**
- **NEVER leave any child unattended in the vehicle. Even very young children may inadvertently cause the vehicle to move, entangle themselves in the windows, or otherwise injure themselves or others.**
- **Always double check to make sure all arms, hands, head and other obstructions are safely out of the way before closing a window.**
- **Do not allow children to play with the power windows. Keep the driver's door power window lock switch in the LOCK position (pressed). Serious injury can result from unintentional window operation by the child.**
- **Do not extend face or arms outside the window opening while driving.**

HOOD

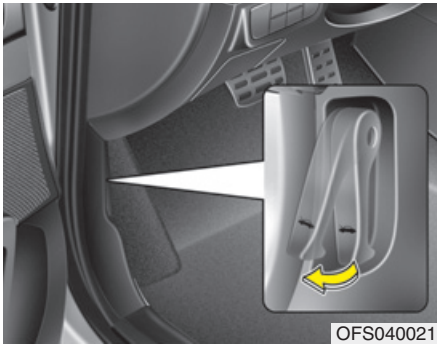
OFS040021

Opening the hood

1. Pull the release lever to unlatch the hood. The hood should pop open slightly.

⚠ WARNING

Open the hood after turning off the engine on a flat surface, shifting the shift lever to the P(Park) position for automatic transaxle and to the 1st(First) gear or R(Reverse) for manual transaxle, and setting the parking brake.

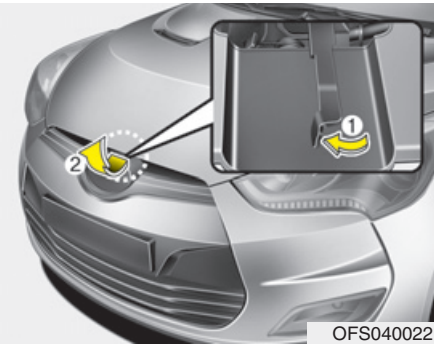

OFS040022

2. Go to the front of the vehicle, raise the hood slightly, push the secondary latch (1) inside of the hood center and lift the hood (2).
3. Raise the hood. It will raise completely by itself after it has been raised halfway.

Closing the hood

1. Before closing the hood, check the following:
   - All filler caps in engine compartment must be correctly installed.
   - Gloves, rags or any other combustible material must be removed from the engine compartment.
2. Lower the hood halfway and push it down. Make sure the hood is locked securely.

⚠ WARNING

- **Before closing the hood, ensure that all obstructions are removed from the hood opening. Closing the hood with an obstruction present in the hood opening may result in property damage or severe personal injury.**
- **Do not leave gloves, rags or any other combustible material in the engine compartment. Doing so may cause a heat-induced fire.**

⚠ WARNING

- **Always double check to be sure that the hood is firmly latched before driving away. If it is not latched, the hood could open while the vehicle is being driven, causing a total loss of visibility, which might result in an accident.**
- **Do not move the vehicle with the hood raised. The view will be blocked and the hood could fall or get damaged.**

FUEL FILLER LID

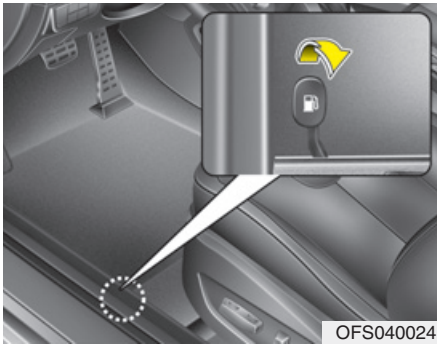
OFS040024

Opening the fuel filler lid

The fuel filler lid must be opened from inside the vehicle by pulling up the fuel filler lid opener.

✻ NOTICE

If the fuel filler lid does not open because ice has formed around it, tap lightly or push on the lid to break the ice and release the lid. Do not pry on the lid. If necessary, spray around the lid with an approved de-icer fluid (do not use radiator anti-freeze) or move the vehicle to a warm place and allow the ice to melt.

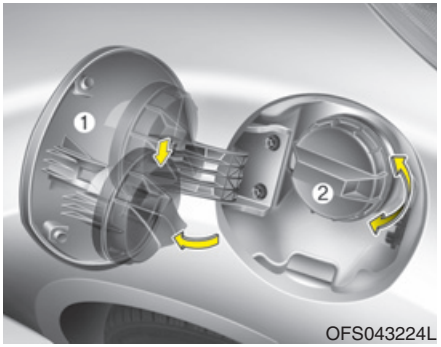

OFS043224L

1. Stop the engine.
2. To open the fuel filler lid, pull the fuel filler lid opener up.
3. Pull the fuel filler lid (1).
4. To remove the cap (2), turn the fuel filler cap counterclockwise.
5. Refuel as needed.

Closing the fuel filler lid

1. To install the cap, turn it clockwise until it “clicks” once. This indicates that the cap is securely tightened.
2. Close the fuel filler lid and push it lightly and make sure that it is securely closed.

⚠ WARNING - Refueling

- **If pressurized fuel sprays out, it can cover your clothes or skin and thus subject you to the risk of fire and burns. Always remove the fuel cap carefully and slowly. If the cap is venting fuel or if you hear a hissing sound, wait until the condition stops before completely removing the cap.**
- **Do not "top off" after the nozzle automatically shuts off when refueling.**
- **Always check that the fuel cap is installed securely to prevent fuel spillage in the event of an accident.**

⚠ WARNING - Refueling dangers

Automotive fuels are flammable materials. When refueling, please note the following guidelines carefully. Failure to follow these guidelines may result in severe personal injury, severe burns or death by fire or explosion.

- **Read and follow all warning at the gas station facility.**
- **Before refueling note the location of the Emergency Gasoline Shut-Off, if available, at the gas station facility.**
- **Before touching the fuel nozzle, you should eliminate potentially dangerous static electricity discharge by touching another metal part of the vehicle, a safe distance away from the fuel filler neck, nozzle, or other gas source.**

(Continued)

(Continued)

- **Do not get back into a vehicle once you have begun refueling since you can generate static electricity by touching, rubbing or sliding against any item or fabric (polyester, satin, nylon, etc.) capable of producing static electricity. Static electricity discharge can ignite fuel vapors resulting in rapid burning. If you must re-enter the vehicle, you should once again eliminate potentially dangerous static electricity discharge by touching a metal part of the vehicle, away from the fuel filler neck, nozzle or other gasoline source.**
- **When using an approved portable fuel container, be sure to place the container on the ground prior to refueling. Static electricity discharge from the container can ignite fuel vapors causing a fire. Once refueling has begun, contact with the vehicle should be maintained until the filling is complete.**

(Continued)

(Continued)

Use only approved portable plastic fuel containers designed to carry and store gasoline.

- **Do not use cellular phones while refueling. Electric current and/or electronic interference from cellular phones can potentially ignite fuel vapors causing a fire.**
- **When refueling, always shut the engine off. Sparks produced by electrical components related to the engine can ignite fuel vapors causing a fire. Once refueling is complete, check to make sure the filler cap and filler door are securely closed, before starting the engine.**
- **DO NOT use matches or a lighter and DO NOT SMOKE or leave a lit cigarette in your vehicle while at a gas station especially during refueling. Automotive fuel is highly flammable and can, when ignited, result in fire.**

(Continued)

(Continued)

- **If a fire breaks out during refueling, leave the vicinity of the vehicle, and immediately contact the manager of the gas station and then contact the local fire department. Follow any safety instructions they provide.**

⚠ CAUTION

- ***Make sure to refuel your vehicle according to the "Fuel requirements" suggested in section 1.***
- ***If the fuel filler cap requires replacement, please make sure that you use parts designed for replacement in your vehicle. An incorrect fuel filler cap can result in a serious malfunction of the fuel system or emission control system. For more detailed information, we recommend that you contact an authorized HYUNDAI dealer.***
- ***Do not spill fuel on the exterior surfaces of the vehicle. Any type of fuel spilled on painted surfaces may damage the paint.***
- ***After refueling, make sure the fuel cap is installed securely to prevent fuel spillage in the event of an accident.***

PANORAMA SUNROOF (IF EQUIPPED)

OFS040026

If your vehicle is equipped with a sunroof, you can slide or tilt your sunroof with the sunroof control lever located on the overhead console.

The sunroof can only be opened, closed, or tilted when the ignition switch is in the ON position.

✻ NOTICE

- **In cold and wet climates, the sunroof may not work properly due to freezing conditions.**
- **After a vehicle is washed or in a rainstorm be sure to wipe off any water that is on the sunroof before operating it.**

⚠ CAUTION

- ***Do not continue to move the sunroof control lever after the sunroof is fully opened, closed, or tilted. Damage to the motor or system components could occur.***
- ***Make sure the sunroof is closed fully when leaving your vehicle. If the sunroof is open, rain or snow may leak through the sunroof and wet the interior as well as cause theft.***

✻ NOTICE

The sunroof cannot tilt when it is in the slide position but can slide while in a tilt position.

⚠ WARNING

Never adjust the sunroof or roller blind while driving. This could result in loss of control and an accident that may cause death, serious injury, or property damage.

OFS042027N

Sliding the sunroof

Before opening or closing the sunroof, open the sunshade.

To open or close the sunroof (manual slide feature), pull or push the sunroof control lever backward or forward.

To open the sunroof automatically:

Pull the sunroof control lever backward to the second detent and then release it. The sunroof will automatically slide open all the way.

To stop the sunroof sliding at any point, pull or push the sunroof control lever momentarily.

To close the sunroof ;

Pull the sunroof control lever forward until the sunroof is closed.

To stop the sunroof sliding at any point, pull or push the sunroof control lever momentarily.

OFS040028

Automatic reversal

If an object or part of the body is detected while the sunshade is closing automatically, it will reverse the direction, and then stop.

The auto reverse function does not work if a tiny obstacle is between the sunroof sash. You should always check that all passengers and objects are away from the sunroof before closing it.

OFS040029

Tilting the sunroof

Before opening or closing the sunroof, open the sunshade.

To open the sunroof, push the sunroof control lever upward.

To close the sunroof, push the sunroof control lever forward until the sunroof moves to the desired position.

⚠ WARNING - Sunroof

- **Be careful that no head, hands and body parts are obstructed by a closing sunroof.**
- **Do not extend the face, neck, arms or body outside the sunroof while driving.**
- **Make sure your hands and head are safely out of the way before closing a sunroof.**

⚠ CAUTION

- ***Periodically remove any dirt that may accumulate on the guide rail.***
- ***If you try to open the sunroof when the temperature is below freezing or when the sunroof is covered with snow or ice, the glass or the motor could be damaged.***

Closing the sunroof

To close the sunroof glass with the sunshade

Push the sunroof control lever forward until the sunroof is closed.

After the sunroof is closed, push the sunroof control lever forward to close the sunshade automatically.

To stop the sunroof movement at any point, pull or push the sunroof control lever momentarily.

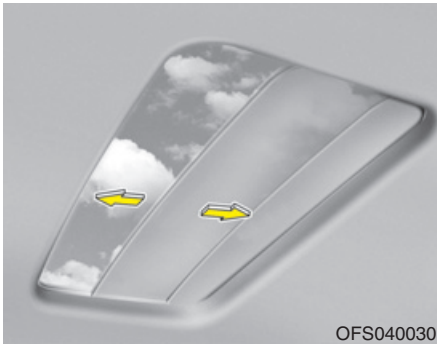
OFS040030

Sunshade

The sunshade will automatically open, when you push the sunroof control lever backward to the first detent and then release it.

The sunshade will automatically close, when you push the sunroof control lever forward and then release it.

✻ NOTICE

It is normal for wrinkles to form on the blind because of its material characteristic.

Resetting the sunroof

Sunroof needs to be reset if (in the following)

- Battery is discharged or disconnected or the related fuse has been replaced or disconnected
- The one-touch sliding function of the sunroof does not normally operate

1. Turn the ignition switch to the ON position.
2. Close the sunroof.
3. Release the sunroof control lever.
4. Push the sunroof control lever forward in the direction of close (about 10 seconds) until the sunroof and sunshade move a little. Then, release the lever.
5. Push the sunroof control lever forward in the direction of close until the sunroof operates as follows;

   SUNSHADE OPEN → TILT OPEN → SLIDE OPEN → SLIDE CLOSE → SUNSHADE CLOSE

   Then, release the control lever.

When this is complete, the sunroof system has been reset.

STEERING WHEEL

Electric power steering (EPS)

Power steering uses the motor to assist you in steering the vehicle. If the engine is off or if the power steering system becomes inoperative, the vehicle may still be steered, but it will require increased steering effort.

The motor driven power steering is controlled by the power steering control unit which senses the steering wheel torque and vehicle speed to command the motor.

The steering effort becomes heavier as the vehicle's speed increases and becomes lighter as the vehicle's speed decreases for better control of the steering wheel.

Should you notice any change in the effort required to steer during normal vehicle operation, we recommend that the system be checked by an authorized HYUNDAI dealer.

✻ NOTICE

The following symptoms may occur during normal vehicle operation:

- **The EPS warning light does not illuminate.**

(Continued)

(Continued)

- **The steering effort is high immediately after turning the ignition switch on. This happens as the EPS system performs the diagnostics. When the diagnostics is completed, the steering effort will return to its normal condition.**
- **A click noise may be heard from the EPS relay after the ignition switch is turned to the ON or LOCK position.**
- **Motor noise may be heard when the vehicle is at a stop or at a low driving speed.**
- **If the Electric Power Steering System does not operate normally, the warning light will illuminate on the instrument cluster. The steering wheel may become difficult to control or operate abnormally. We recommend that you contact an authorized HYUNDAI dealer.**
- **The steering effort increases if the steering wheel is rotated continuously when the vehicle is not in motion. However, after a few minutes, it will return to its normal conditions.**
- **When you operate the steering wheel in low temperature, abnormal noise could occur. If temperature rises, the noise will disappear. This is a normal condition.**

Tilt steering

Tilt steering allows you to adjust the steering wheel before you drive. You can also raise it to give your legs more room when you exit and enter the vehicle.

The steering wheel should be positioned so that it is comfortable for you to drive, while permitting you to see the instrument panel warning lights and gauges.

⚠ WARNING

- **Never adjust the angle of the steering wheel while driving. You may lose steering control and cause severe personal injury, death or accidents.**
- **After adjusting, push the steering wheel both up and down to be certain it is locked in position.**

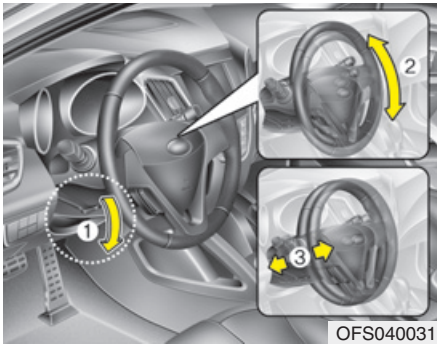

OFS040031

To change the steering wheel angle, pull down the lock release lever (1), adjust the steering wheel to the desired angle (2) and height (3), then pull up the lock-release lever to lock the steering wheel in place. Be sure to adjust the steering wheel to the desired position before driving.

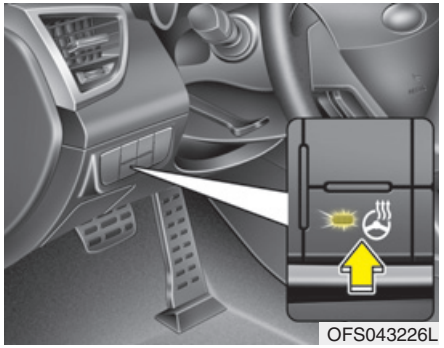
OFS043226L

Heated steering wheel (if equipped)

When the ignition switch is in the ON position, pressing the heated steering wheel button warms the steering wheel. The indicator on the button will illuminate.

To turn the steering wheel off, press the button once again. The indicator on the button will turn off.

It will turn off automatically approximately 30 minutes after the heated steering wheel is turned on.

If you turn on the ignition again after turn off your engine in half an hour (after operating heater button), the heating system will be maintained in its 'on' condition.

⚠ CAUTION

- ***Do not install any grip to operate the steering wheel. This causes damage to the heated steering wheel system.***
- ***When cleaning the heated steering wheel, do not use an organic solvent such as paint thinner, benzene, alcohol and gasoline. Doing so may damage the surface of the steering wheel.***
- ***If the surface of steering wheel is damaged by sharp object, damage to the heated steering wheel components could occur.***

OFS040032

Horn

To sound the horn, press the horn symbol on steering wheel.

Check the horn regularly to be sure it operates properly.

✻ NOTICE

To sound the horn, press the area indicated by the horn symbol on your steering wheel (see illustration). The horn will operate only when this area is pressed.

⚠ CAUTION

Do not strike the horn severely to operate it, or hit it with your fist. Do not press on the horn with a sharp-pointed object.

MIRRORS

Inside rearview mirror

Adjust the rearview mirror so that the center view through the rear window is seen. Make this adjustment before you start driving.

⚠ WARNING - Rear visibility

Do not place objects in the rear seat or cargo area which would interfere with your vision out of the rear window.

⚠ WARNING

Do not adjust the rearview mirror while the vehicle is moving. This could result in loss of control, and an accident which could cause death, serious injury or property damage.

⚠ WARNING

Do not modify the inside mirror and do not install a wide mirror. It could result in injury, during an accident or deployment of the air bag.

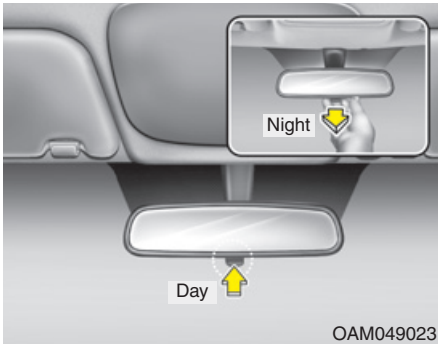

Day/night rearview mirror (if equipped)

Make this adjustment before you start driving and while the day/night lever is in the day position.

Pull the day/night lever toward you to reduce glare from the headlights of the vehicles behind you during night driving.

Remember that you lose some rearview clarity in the night position.

Outside rearview mirror

Be sure to adjust the mirror angles before driving.

Your vehicle is equipped with both left-hand and right-hand outside rearview mirrors. The mirrors can be adjusted remotely with the remote switch (if equipped). The mirror heads can be folded back to prevent damage during an automatic car wash or when passing through a narrow street (if equipped).

⚠ WARNING - Rearview mirrors

- **The right outside rearview mirror is convex. In some countries, the left outside rearview mirror is also convex. Objects seen in the mirror are closer than they appear.**
- **Use your interior rearview mirror or direct observation to determine the actual distance of following vehicles when changing lanes.**

⚠ CAUTION

Do not scrape ice off the mirror face; this may damage the surface of the glass. If ice should restrict movement of the mirror, do not force the mirror for adjustment. To remove ice, use a deicer spray.

⚠ CAUTION

If the mirror is jammed with ice, do not adjust the mirror by force. Use an approved spray de-icer (not radiator antifreeze) to release the frozen mechanism or move the vehicle to a warm place and allow the ice to melt.

⚠ WARNING

Do not adjust or fold the outside rearview mirrors while the vehicle is moving. This could result in loss of control, and an accident which could cause death, serious injury or property damage.

OFS040034

Remote control

Electric type (if equipped)

The electric remote control mirror switch allows you to adjust the position of the left and right outside rearview mirrors. To adjust the position of either mirror, move the lever (1) to R (Right) or L (Left) to select the right side mirror or the left side mirror, then press a corresponding point on the mirror adjustment control to position the selected mirror up, down, left or right.

After adjustment, put the lever into neutral (center) position to prevent inadvertent adjustment.

⚠ CAUTION

- ***The mirrors stop moving when they reach the maximum adjusting angles, but the motor continues to operate while the switch is pressed. Do not press the switch longer than necessary, the motor may be damaged.***
- ***Do not attempt to adjust the outside rearview mirror by hand. Doing so may damage the parts.***

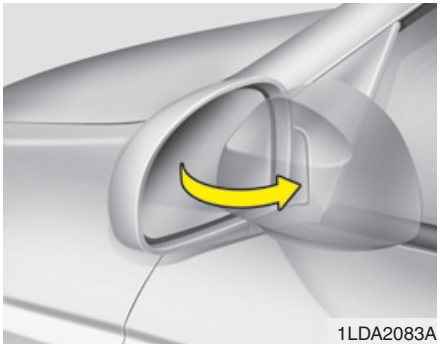

Folding the outside rearview mirror

Manual type

To fold the outside rearview mirror, grasp the housing of the mirror and then fold it toward the rear of the vehicle.

Electric Type (if equipped)

To fold the outside rearview mirror, press the button. To unfold it, press the button again.

⚠ CAUTION

The electric type outside rearview mirror operates even though the ignition switch is in the LOCK position. However, to prevent unnecessary battery discharge, do not adjust the mirrors longer than necessary while the engine is not running.

⚠ CAUTION

In case it is an electric type outside rearview mirror, don't fold it by hand. It could cause motor failure.

Outside rearview mirror heater (if equipped)

The outside rearview mirror heater is actuated in connection with the rear window defroster. To heat the outside rearview mirror glass, push the button ( ) for rear window defroster.

The outside rearview mirror glass will be heated for defrosting or defogging and will give you improved rear vision in inclement weather conditions. Push the button again to turn the heater off. The outside rearview mirror heater automatically turns off after 20 minutes.

INSTRUMENT CLUSTER

■ Type A

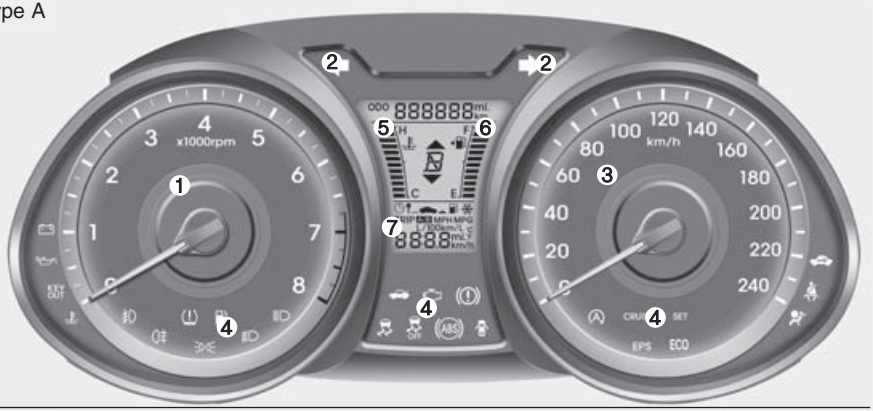

■ Type B

1. Tachometer
2. Turn signal indicators
3. Speedometer
4. Warning and indicator lights
5. Engine temperature gauge
6. Fuel gauge
7. Odometer/Tripmeter*

* if equipped

❊ The actual cluster in the vehicle may differ from the illustration.

OFS043036L/OFS043037L

■ Type C

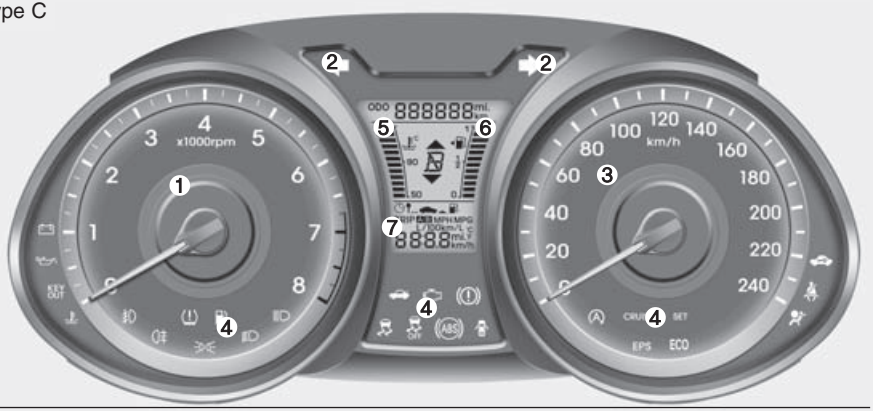

■ Type D

1. Tachometer
2. Turn signal indicators
3. Speedometer
4. Warning and indicator lights
5. Engine temperature gauge
6. Fuel gauge
7. Odometer/Tripmeter*

* if equipped

❊ The actual cluster in the vehicle may differ from the illustration.

OFS043036E/OFS043037E

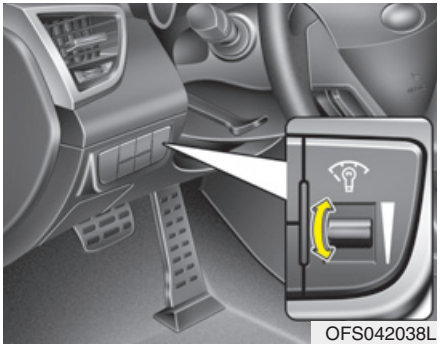
OFS042038L

Instrument panel illumination (if equipped)

Press the illumination control switch to adjust the instrument panel illumination intensity. For instrument cluster type A, the vehicle's parking lights or headlights should be on to adjust the instrument panel illumination.

⚠ WARNING

Never adjust the instrument cluster while driving. This could result in loss of control and lead to an accident that may cause death, serious injury, or property damage.

■ Type A

OFS042039L

■ Type B

OFS042039E

■ Type C

OFS042040E

Gauges

Speedometer

The speedometer indicates the forward speed of the vehicle.

The speedometer is calibrated in kilometers per hour and/or miles per hour.

■ Type A

OFS040042

■ Type B

OFS042041L

Tachometer

The tachometer indicates the approximate number of engine revolutions per minute (rpm).

Use the tachometer to select the correct shift points and to prevent lugging and/or over-revving the engine.

The tachometer pointer may move slightly when the ignition switch is in ON position with the engine OFF. This movement is normal and will not affect the accuracy of the tachometer once the engine is running.

⚠ CAUTION

Do not operate the engine within the tachometer's RED ZONE.

This may cause severe engine damage.

■ Type A

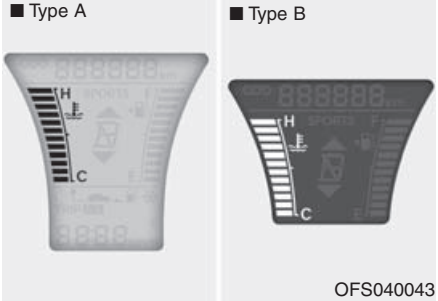

■ Type B

OFS040043

■ Type C

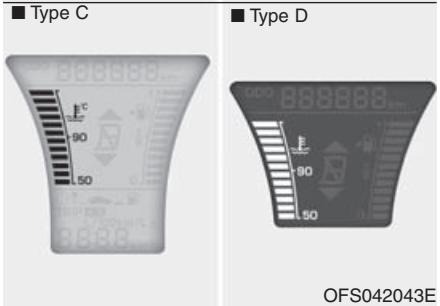

■ Type D

OFS042043E

Engine temperature gauge

This gauge shows the temperature of the engine coolant when the ignition switch is ON. The gauge is supplemented by a Engine coolant temperature warning light, which illuminates when the engine is overheating.

Do not continue driving with an overheated engine. If your vehicle overheats, refer to “If the engine overheats” in section 6.

⚠ WARNING

Never remove the radiator cap when the engine is hot. The engine coolant is under pressure and could cause severe burns. Wait until the engine is cool before adding coolant to the reservoir.

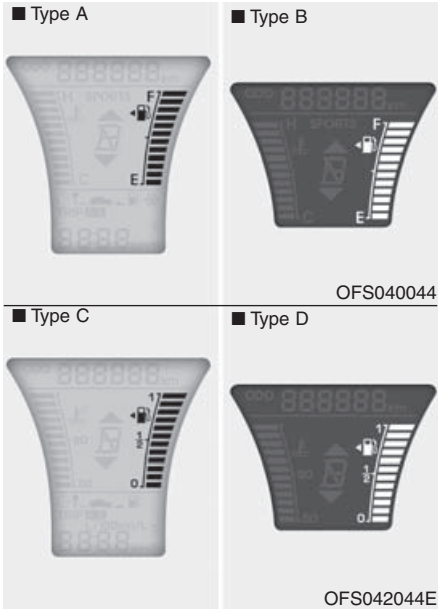

Fuel gauge

The fuel gauge indicates the approximate amount of fuel remaining in the fuel tank. The fuel tank capacity is given in section 8. The fuel gauge is supplemented by a low fuel warning light, which will illuminate when the fuel tank is nearly empty.

On inclines or curves, the fuel gauge may fluctuate or the low fuel warning light may come on earlier than usual due to the movement of fuel in the tank.

⚠ WARNING - Fuel gauge

Running out of fuel can expose vehicle occupants to danger.

You must stop and obtain additional fuel as soon as possible after the warning light comes on or when the gauge indicator comes close to the “0/E” level.

⚠ CAUTION

Avoid driving with a very low fuel level. Running out of fuel could cause the engine to misfire, damaging the catalytic converter.

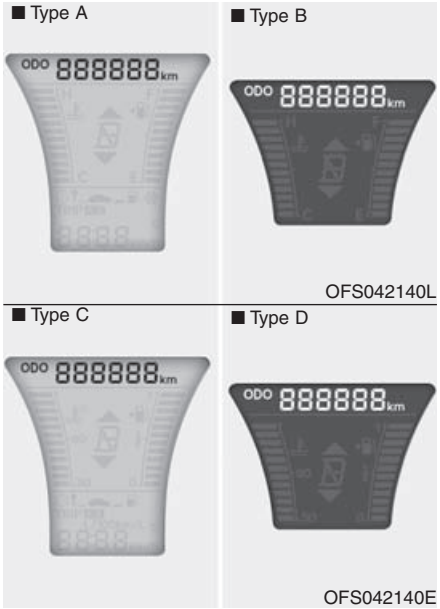

Odometer (km or mi.)

The odometer indicates the total distance the vehicle has been driven.

You will also find the odometer useful to determine when periodic maintenance should be performed.

✻ NOTICE

It is forbidden to alter the odometer of all vehicles with the intent to change the mileage registered on the odometer. The alteration may void your warranty coverage.

Tripmeter/Trip computer (if equipped)

The trip computer is a microcomputer-controlled driver information system that displays information related to driving, when the ignition switch is in the ON position. All stored driving information (except Odometer) resets if the battery is disconnected.

Press the TRIP button for less than 1 second to select any mode as follows:

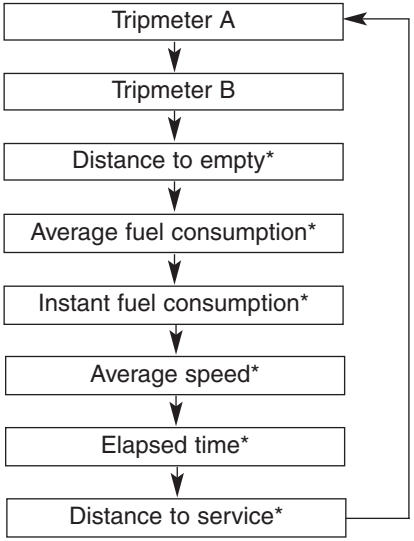

* if equipped

Tripmeter (km or mi.)

TRIP A : Tripmeter A

TRIP B : Tripmeter B

This mode indicates the distance of individual trips selected since the last tripmeter reset.

The meter's working range is from 0.0 to 999.9 km (0.0 to 999.9 miles).

Pressing the RESET button for more than 1 second, when the tripmeter (TRIP A or TRIP B) is being displayed, clears the tripmeter to zero (0.0).

Distance to empty (if equipped) (km or mi.)

This mode indicates the estimated distance to empty based on the current fuel in the fuel tank and the amount of fuel delivered to the engine. When the remaining distance is below 50 km (30 miles), “---” will be displayed.

The meter’s working range is from 50 to 999 km (30 to 999 miles).

OFS042047L

Average fuel consumption (if equipped) (*l*/100 km or MPG)

This mode calculates the average fuel consumption from the total fuel used and the distance since the last average consumption reset. The total fuel used is calculated from the fuel consumption input. For an accurate calculation, drive more than 50 m (0.03 miles).

Pressing the RESET button for more than 1 second, when the average fuel consumption is being displayed, clears the average fuel consumption to zero (--.-).

OFS042143L

Instant fuel consumption (if equipped) (*l*/100 km or MPG)

This mode calculates the instant fuel consumption of the last few seconds.

✻ NOTICE

- **If the vehicle is not on level ground or the battery power has been interrupted, the "Distance to empty" function may not operate correctly.**
  The trip computer may not register additional fuel if less than 6 liters (1.6 gallons) of fuel are added to the vehicle.
- **The fuel consumption and distance to empty may vary significantly based on driving conditions, driving habits, and condition of the vehicle.**
- **The distance to empty value is an estimate of the available driving distance. This may differ from the actual driving distance available.**

OFS042048L

Average speed (km/h or MPH) (if equipped)

This mode calculates the average speed of the vehicle since the last average speed reset.

Even if the vehicle is not in motion, the average speed keeps going while the engine is running.

Pressing the RESET button for more than 1 second, when the average speed is being displayed, clears the average speed to zero (---).

OFS042142L

Elapsed time (if equipped)

This mode indicates the total time traveled since the last driving time reset.

Even if the vehicle is not in motion, the driving time keeps going while the engine is running.

The meter's working range is from 00:00~99:59.

Pressing the RESET button for more than 1 second, when the driving time is being displayed, clears the driving time to zero (00:00).

OFS042171L

Distance to service (if equipped)

After selecting the maintenance of engine oil, if service is required, a corresponding message will be displayed.

OFS042161L

Maintenance (if equipped)

1. When the vehicle is at a standstill, pressing the TRIP button for more than 2 seconds with the ENGINE START/STOP button in the ON position or engine running, the LCD display on the cluster will change to the "User Setting" mode.

   You can move to the items by pressing the TRIP button and select the item by pressing the RESET button.
2. In the "User Setting" mode select "Maintenance".
3. Select the desired maintenance schedule.
4. If finished, you can come out of the Maintenance mode by pressing the TRIP button for more than 2 seconds.

✻ NOTICE

If service is required, "Engine oil service required" message will be displayed.
If you would like to reset or inactivate the maintenance system, press the reset button.
The display will change to "Oil Service Message" mode.
You can move to items by pressing the TRIP button and select the desired items by pressing the RESET button.

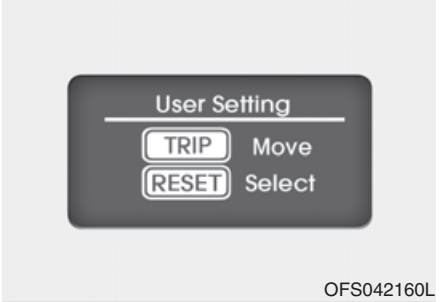

OFS042160L

OFS042162L

Vehicle option

When the vehicle is at a standstill, pressing the TRIP button for more than 2 seconds with the engine start/stop button in the ON position or engine running, the LCD screen on the cluster will change to the vehicle setting mode.

You can change the item by pressing the TRIP button and choose the item by pressing the RESET button.

Auto door lock (if equipped)

Off - The auto door lock operation will be canceled.

Speed - All doors will be automatically locked when the vehicle speed exceeds 15km/h (9.3mph).

Shift Lever - All doors will be automatically locked if the shift lever is shifted from the P(Park) position to the R(Reverse), N(Neutral) or D(Drive) position.

Auto Triple Turn (One-touch triple turn signal) (if equipped)

If this item is checked, the lane change signals will blink 3, 5 or 7 times when the turn signal lever is moved slightly.

Auto door unlock (if equipped)

Off - The auto door unlock operation will be canceled.

Key Out - All doors will be automatically unlocked when the ignition key is removed from ignition switch (or smart key is removed from the smart key holder).

Shift Lever - All doors will be automatically unlocked if the shift lever is shifted to the P(Park) position.

AVG fuel economy

Auto Reset - The average fuel economy will reset automatically when you drive after refueling.

Manual Reset - The average fuel economy will not reset automatically when you drive after refueling.

Headlamp escort

On - If you turn the ignition switch to the ACC or OFF position with the headlamp ON, the headlamp remain on for about 20 minutes. And the head lamp welcome operation will be activated. Refer to the [LIGHTING] in this chapter.

Off - The headlamp escort and headlamp welcome operation will be canceled.

Warnings and indicators

All warning lights are checked by turning the ignition switch ON (do not start the engine). If any light that does not illuminate, we recommend that the system be checked by an authorized HYUNDAI dealer.

After starting the engine, check to make sure that all warning lights are off. If any are still on, this indicates a situation that needs attention.

Air bag warning light

This warning light will illuminate for approximately 6 seconds each time you turn the ignition switch to the ON position.

This light also comes on when the Supplemental Restraint System (SRS) is not working properly. If the SRS air bag warning light does not come on, or continuously remains on after operating for about 6 seconds when you turned the ignition switch to the ON position or started the engine, or if it comes on while driving, we recommend that the system be inspected by an authorized HYUNDAI dealer.

For information about the passenger's front air bag ON/OFF indicator, refer to "Air bag - supplemental restraint system" in section 3.

ECO indicator (if equipped)

Active ECO system

When the active ECO is operating the ECO indicator is green.

For more detailed information, refer to "Active ECO" in chapter 5.

Seat belt warning

As a reminder to the driver and passenger, the seat belt warning light will illuminate for approximately 6 seconds each time you turn the ignition switch ON regardless of belt fastening.

For details, refer to the “Seat belt” in section 3.

Engine oil pressure warning

This warning light indicates the engine oil pressure is low.

If the warning light illuminates while driving:

1. Drive safely to the side of the road and stop.
2. With the engine off, check the engine oil level. If the level is low, add oil as required.

If the warning light remains on after adding oil or if oil is not available, we recommend that you call an authorized HYUNDAI dealer.

⚠ CAUTION

If the engine is not stopped immediately after the engine oil pressure warning light is illuminated, severe damage could result.

⚠ CAUTION

If the oil pressure warning light stays on while the engine is running, serious engine damage may result. The oil pressure warning light comes on whenever there is insufficient oil pressure. In normal operation, it should come on when the ignition switch is turned on, then go out when the engine is started. If the oil pressure warning light stays on while the engine is running, there is a serious malfunction.

If this happens, stop the car as soon as it is safe to do so, turn off the engine and check the oil level. If the oil level is low, fill the engine oil to the proper level and start the engine again. If the light stays on with the engine running, turn the engine off immediately. In any instance where the oil light stays on when the engine is running, we recommend that the system be checked by an authorized HYUNDAI dealer.

Turn signal indicator

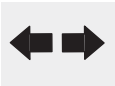

The blinking green arrows on the instrument panel show the direction indicated by the turn signals. If the arrow comes on but does not blink, blinks more rapidly than normal, or does not illuminate at all, it indicates a malfunction in the turn signal system. You should consult your dealer for repairs.

This indicator also blinks when the hazard warning switch is turned on.

High beam indicator

This indicator illuminates when the headlights are on and in the high beam position or when the turn signal lever is pulled into the Flash-to-Pass position.

Low Beam Indicator

This indicator illuminates when the headlights are on and in the low beam position.

Front fog light indicator (if equipped)

This indicator illuminates when the front fog lights are ON.

Rear fog light indicator

This indicator illuminates when the rear fog lights are ON.

Light on indicator

The indicator illuminates when the tail lights or headlights are ON.

Double clutch transmission shift indicator/Automatic transaxle shift position indicator (if equipped)

The indicator displays which Double clutch transmission/automatic transaxle shift lever is selected.

In DS mode, the “S” indicator displays with “SPORTS” indicator in cluster. For more detailed information about DS mode, refer to the chapter 5.

Manual transaxle shift indicator (if equipped)

This indicator informs you which gear is desired while driving to save fuel.

For example

▲3 : Indicates that shifting up to the 3rd gear is desired (currently the shift lever is in the 2nd or 1st gear).

▼3 : Indicates that shifting down to the 3rd gear is desired (currently the shift lever is in the 4th or 5th gear).

Double clutch transmission shift indicator/ Automatic transaxle shift indicator - Sports mode (if equipped, For Europe)

In the Sports Mode, this indicator informs which gear is desired while driving to save fuel.

- Shifting up : ▲2, ▲3, ▲4, ▲5, ▲6
- Shifting down : ▼1, ▼2, ▼3, ▼4, ▼5

For example

▲3 : Indicates that shifting up to the 3rd gear is desired (currently the shift lever is in the 2nd or 1st gear).

▼3 : Indicates that shifting down to the 3rd gear is desired (currently the shift lever is in the 4th, 5th, or 6th gear).

When the system is not working properly, the indicator is not displayed.

⚠ CAUTION - DCT

- ***When the problem of gear system occurs, the transaxle indicator will blink. For your safety, we recommend that you contact an authorized HYUNDAI dealer and have the system checked.***
- ***When the clutch is overheated, the safe protection mode operates. According to the safe protection mode, the transaxle indicator blinks with buzzer sound. The buzzer beeps 3 times. In this time, the LCD warning about safe protection mode also displays. In this condition, the driving may not be smoothly. If you ignore this warning, the driving condition is getting worse and the system may have problem. To return the normal driving condition, apply the foot brake and stop the vehicle for few minutes before driving off.***

* DCT : Double clutch transmission

Engine coolant temperature warning light

The warning light shows the temperature of the engine coolant when the ignition switch is ON.

The warning light illuminates if the temperature of the engine coolant is above 120±3°C (248±5.5°F).

Do not continue driving with an overheated engine. If your vehicle overheats, refer to “Overheating” in the section 6.

✻ NOTICE

If the engine coolant temperature warning light illuminates, it indicates overheating that may damage the engine.

Charging system warning light

This warning light indicates a malfunction of either the generator or electrical charging system.

If the warning light illuminates while the vehicle is in motion:

1. Drive to the nearest safe location.
2. With the engine off, check the generator drive belt for looseness or breakage.
3. If the belt is adjusted properly, a problem exists somewhere in the electrical charging system. We recommend that the system be checked by an authorized HYUNDAI dealer.

EPS (Electric power steering) system warning light (if equipped)

This warning light illuminates after the ignition key is turned to the ON position and then it will go off when the engine starts.

This light also comes on when the EPS has malfunctioned. If it comes on while driving, we recommend that the system be inspected by an authorized HYUNDAI dealer.

Door ajar warning light (if equipped)

This warning light illuminates when a door is not closed securely.

Tailgate open warning light (if equipped)

This warning light illuminates when the tailgate is not closed securely.

Immobilizer indicator (if equipped)

Without smart key system

This indicator illuminates when the immobilizer key is inserted and turned to the ON position to start the engine.

At this time, you can start the engine. The indicator goes out after approximately 30 seconds.

If this light blinks when the ignition switch is in the ON position before starting the engine, we recommend that the system be checked by an authorized HYUNDAI dealer.

With smart key system

If any of the following occurs in a vehicle equipped with the smart key, the immobilizer indicator illuminates, blinks or goes off.

- When the smart key is in the vehicle, if the ENGINE START/STOP button is in the ACC or ON position, the indicator will illuminate for approximately 30 seconds to indicate that you are able to start the engine. However, when the smart key is not in the vehicle, if the ENGINE START/STOP button is pressed, the indicator will blink for a few seconds to indicate that you are not able to start the engine.
- If the indicator illuminates only for 2 seconds and goes out when the ENGINE START/STOP button is turned to ON position with the smart key in the vehicle, we recommend that the system be checked by an authorized HYUNDAI dealer.
- When the battery is weak, if the ENGINE START/STOP button is pressed, the indicator blinks, you are not able to start the engine. However, you are able to start the engine by pressing the ENGINE START/STOP button directly with the smart key. Also, if the smart key system related parts have a problem, the indicator will blink.

Low fuel level warning

This warning light indicates the fuel tank is nearly empty. When it comes on, you should add fuel as soon as possible. Driving with the fuel level warning light on or with the fuel level below “0/E” can cause the engine to misfire and damage the catalytic converter (if equipped).

Malfunction indicator lamp (MIL) (check engine light) (if equipped)

This indicator is part of the Engine Control System which monitors various emission control system components. If this indicator illuminates while driving, it indicates that a potential malfunction has been detected somewhere in the emission control system.

This indicator will also illuminate when the ignition switch is turned to the ON position, and will go off in a few seconds after the engine is started. If it illuminates while driving, or does not illuminate when the ignition switch is turned to the ON position, we recommend that the system be checked by an authorized HYUNDAI dealer.

Generally, your vehicle will continue to be drivable, but we recommend that the system be checked by an authorized HYUNDAI dealer.

⚠ CAUTION

- ***Prolonged driving with the Emission Control System Malfunction Indicator Light illuminated may cause damage to the emission control systems which could effect drivability and/or fuel economy.***
- ***If the Emission Control System Malfunction Indicator Light illuminates, potential catalytic converter damage is possible which could result in loss of engine power. We recommend that the Engine Control System be inspected by an authorized HYUNDAI dealer.***

Parking brake & brake fluid warning

Parking brake warning

This warning light is illuminated when the parking brake is applied with the ignition switch in the START or ON position. The warning light should go off when the parking brake is released.

The parking brake warning chime (if equipped) will sound to remind you that the parking brake is applied when you are driving above approximately 10 km/h (6 mph). Always release the parking brake before you drive.

Low brake fluid level warning

If the warning light remains on, it may indicate that the brake fluid level in the reservoir is low.

If the warning light remains on:

1. Drive carefully to the nearest safe location and stop your vehicle.
2. With the engine stopped, check the brake fluid level immediately and add fluid as required. Then check all brake components for fluid leaks.

3. Do not drive the vehicle if leaks are found, the warning light remains on or the brakes do not operate properly. We recommend that you contact an authorized HYUNDAI dealer.

Your vehicle is equipped with dual-diagonal braking systems. This means you still have braking on two wheels even if one of the dual systems should fail. With only one of the dual systems working, more than normal pedal travel and greater pedal pressure are required to stop the vehicle. Also, the vehicle will not stop in as short a distance with only a portion of the brake system working. If the brakes fail while you are driving, shift to a lower gear for additional engine braking and stop the vehicle as soon as it is safe to do so.

To check bulb operation, check whether the parking brake and brake fluid warning light illuminates when the ignition switch is in the ON position.

⚠ WARNING

Driving the vehicle with a warning light on is dangerous. If the brake warning light remains on, we recommend that the system be checked by an authorized HYUNDAI dealer.

ABS (Anti-lock brake system) warning light (if equipped)

This warning light illuminates if the ignition switch is turned ON and goes off in approximately 3 seconds if the system is operating normally.

If the ABS warning light remains on, comes on while driving, or does not come on when the ignition switch is turned to the ON position, this indicates that the ABS may have malfunctioned.

If this occurs, we recommend that the system be checked by an authorized HYUNDAI dealer. The normal braking system will still be operational, but without the assistance of the anti-lock brake system.

Electronic brake force distribution (EBD) system warning light

If two warning lights illuminate at the same time while driving, your vehicle may have a malfunction with ABS and EBD system.

In this case, your ABS and regular brake system may not work normally. We recommend that the system be checked by an authorized HYUNDAI dealer.

⚠ WARNING

If both ABS and Brake warning lights are on and stay on, your vehicle's brake system will not work normally. So you may experience an unexpected and dangerous situation during sudden braking. In this case, avoid high speed driving and abrupt braking. We recommend that the system be checked by an authorized HYUNDAI dealer.

ESC (Electronic Stability Control) indicator (if equipped)

The ESC indicator will illuminate when the ignition switch is turned ON, but should go off after approximately 3 seconds. When the ESC is on, it monitors the driving conditions. Under normal driving conditions, the ESC indicator will remain off. When a slippery or low traction condition is encountered, the ESC will operate, and the ESC indicator will blink to indicate the ESC is operating.

But, if the ESC system malfunctions the indicator illuminates and stays on. We recommend that the system be checked by an authorized HYUNDAI dealer.

ESC OFF indicator (if equipped)

The ESC OFF indicator will illuminate when the ignition switch is turned ON, but should go off after approximately 3 seconds. To switch to ESC OFF mode, press the ESC OFF button. The ESC OFF indicator will illuminate indicating the ESC is deactivated.

Cruise indicator (if equipped)

CRUISE indicator

The indicator illuminates when the cruise control system is enabled.

The cruise indicator in the instrument cluster is illuminated when the cruise control ON-OFF button on the steering wheel is pushed.

The indicator goes off when the cruise control ON-OFF button is pushed again. For more information about the use of cruise control, refer to “Cruise control system” in section 5.

Cruise SET indicator

The indicator illuminates when the cruise control switch (SET- or RES+) is ON.

The cruise SET indicator in the instrument cluster illuminats when the cruise control switch (SET- or RES+) is pushed.

The cruise SET indicator does not illuminate when the cruise control switch (CANCEL) is pushed or the system is disengaged.

TPMS (Tire Pressure Monitoring System) indicator (if equipped)

Low tire pressure telltale / TPMS malfunction indicator

The low tire pressure telltale/TPMS malfunction indicator comes on for 3 seconds after the ignition switch is turned to the "ON" position.

The TPMS malfunction indicator will illuminate after it blinks for approximately 1 minute when there is a problem with the Tire Pressure Monitoring System.

If this occurs, we recommend that the system be checked by an authorized HYUNDAI dealer.

For details, refer to the “TPMS” in section 6.

⚠ WARNING

Significantly low tire pressure makes the vehicle unstable and can contribute to loss of vehicle control and increased braking distances.

Continued driving on low pressure tires will cause the tires to overheat and fail.

⚠ WARNING - Safe stopping

- **The TPMS cannot alert you to severe and sudden tire damage caused by external factors.**
- **If you feel any vehicle instability, immediately take your foot off the accelerator, apply the brakes gradually and with light force, and slowly move to a safe position off the road.**

AUTO STOP indicator (if equipped)

This indicator will illuminate when the engine enters the Idle Stop mode of the ISG (Idle Stop and Go) system.

When the automatic starting occurs, the "AUTO STOP" indicator on the cluster will blink for 5 seconds.

For more details, refer to the “ISG (Idle Stop and Go) system” in section 5.

✻ NOTICE

When the engine automatically starts by the ISG system, some warning lights (ABS, ESC, ESC OFF, EPS or Parking brake warning light) may turn on for a few seconds.

This happens because of low battery voltage. It does not mean the system has malfunctioned.

Sunroof open warning chime (if equipped)

If the driver turns off the engine and opens the driver-side door when the sunroof is not fully closed, the warning chime will sound for approximately 7 seconds.

Close the sunroof securely when leaving your vehicle.

Overspeed warning (if equipped)

Overspeed warning light

If you drive with the speed of 120 km/h or more, the overspeed warning light will blink. This is to prevent you from overspeeding.

Overspeed warning chime (if equipped)

If you drive with the speed of 120 km/h or more, the overspeed warning chime will sound for about 5 seconds. This is to prevent you from overspeeding.

Washer Fluid Warning Light (if equipped)

This warning light illuminates:

When the washer fluid level in the reservoir is nearly empty.

In this case, you should refill the washer fluid.

LCD display warning (if equipped)

Door open ! (if equipped)

It displays the corresponding door or tailgate that is not closed securely.

Low Tire Pressure (if equipped)

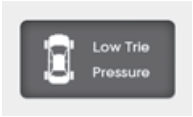

When one or more of your tires is significantly under inflated, the warning illuminates on the LCD display.

Key is not in vehicle

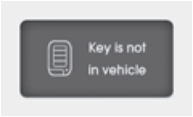

If the smart key is not in the vehicle and if any door is opened or closed with the ENGINE START/STOP button in the ACC, ON, or START position, the warning illuminates on the LCD display. Also, the chime sounds for 5 seconds when the smart key is not in the vehicle and the door is closed.

Always have the smart key with you.

Low key battery

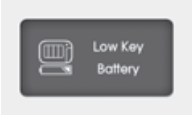

If the ENGINE START/STOP button turns to the OFF position when the smart key in the vehicle discharges, the warning illuminates on the LCD display for about 10 seconds. Also, the warning chime sounds once.

Replace the battery with a new one.

Press brake pedal to start engine

If the ENGINE START /STOP button turns to the ACC position twice by pressing the button repeatedly without depressing the brake pedal, the warning illuminates on the LCD display for about 10 seconds to indicate that you should depress the brake pedal to start the engine.

Press clutch pedal to start engine (Manual transaxle)

If the ENGINE START /STOP button turns to the ACC position twice by pressing the button repeatedly without depressing the clutch pedal, the warning illuminates on the LCD display for about 10 seconds to indicate that you should depress the clutch pedal to start the engine.

Shift to "P" position

If you try to turn off the engine without the shift lever in the P (Park) position, the ENGINE START/ STOP button will turn to the ACC position. If the button is pressed once more it will turn to the ON position. The warning illuminates on the LCD display for about 10 seconds to indicate that you should press the ENGINE START/STOP button with the shift lever in the P (Park) position to turn off the engine.

Also, the warning chime sounds for about 10 seconds. (if equipped)

Press start button again

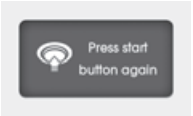

If you can not operate the ENGINE START/ STOP button when there is a problem with the ENGINE START/STOP button system, the warning illuminates for 10 seconds and the chime sounds continuously to indicate that you could start the engine by pressing the ENGINE START/STOP button once more.

The chime will stop if the ENGINE START/STOP button system works normally or the theft alarm system is armed.

If the warning illuminates each time you push the start/stop button, we recommend that the system be checked by an authorized HYUNDAI dealer.

Shift to "P" or "N" to start the engine

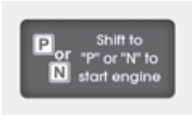

If you try to start the engine with the shift lever not in the P(Park) or N(Neutral) position, the warning illuminates for about 10 seconds on the LCD display.

You can also start the engine with the shift lever in the N(Neutral) position, but for your safety start the engine with the shift lever in the P(Park) position.

Press start button while turn steering

If the steering wheel does not unlock normally when the ENGINE START/STOP button is pressed, the warning illuminates for 10 seconds on the LCD display. Also, the warning chime sounds once and the ENGINE START/STOP button light blinks for 10 seconds.

When you are warned, press the ENGINE START/STOP button while turning the steering wheel right and left.

Press start button with smart key

If you press the ENGINE START/STOP button while the warning “Key is not detected” illuminates the warning “Please press the start button with smart key” illuminates for 10 seconds on the LCD display. Also, the immobilizer indicator blinks for 10 seconds.

Check stop lamp fuse

When the stop lamp fuse is disconnected, the warning illuminates for 10 seconds on the LCD display.

Replace the fuse with a new one. If that is not possible you can start the engine by pressing the ENGINE START/STOP button for 10 seconds in ACC.

Stop when safe protection mode on

When the clutch is overheated, this display will be displayed. In this moment, the driving may not be smoothly. If you ignore this warning, the vehicle may not drive smoothly and the system may have problem. For the good condition of vehicle, stop the vehicle for few seconds.

Rear parking assist warning (if equipped)

It displays the area an obstacle is detected while moving rearward.

For details, refer to “Rear parking assist system” in section 4.

Key is not detected

If the smart key is not in the vehicle or is not detected and you press the ENGINE START/ STOP button, the warning illuminates on the LCD display for 10 seconds. Also, the immobilizer indicator blinks for 10 seconds.

Check steering wheel lock

If the steering wheel does not lock normally when the ENGINE START/STOP button turns to the OFF position, the warning illuminates for 10 seconds on the LCD display. Also, the warning chime sounds for 3 seconds and the ENGINE START/STOP button light blinks for 10 seconds.

Low Washer Fluid (if equipped)

This warning message illuminates on the service reminder mode if the washer fluid level in the reservoir is nearly empty.

It means that you should refill the washer fluid.

REAR PARKING ASSIST SYSTEM (IF EQUIPPED)

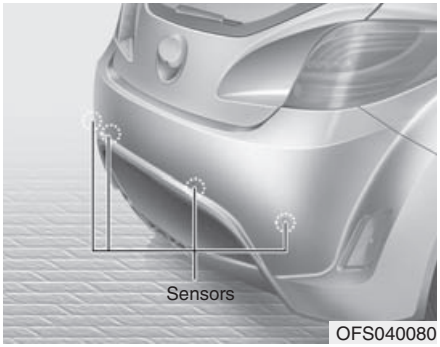

OFS040080

The rear parking assist system assists the driver during backward movement of the vehicle by chiming if any object is sensed within a distance of 120 cm (47 in.) behind the vehicle. This system is a supplemental system and it is not intended to nor does it replace the need for extreme care and attention of the driver. The sensing range and objects detectable by the back sensors are limited. Whenever backing-up, pay as much attention to what is behind you as you would in a vehicle without a rear parking assist system.

⚠ WARNING

The rear parking assist system is a supplementary function only. The operation of the rear parking assist system can be affected by several factors (including environmental conditions). It is the responsibility of the driver to always check the area behind the vehicle before and while backing up.

■ Type A

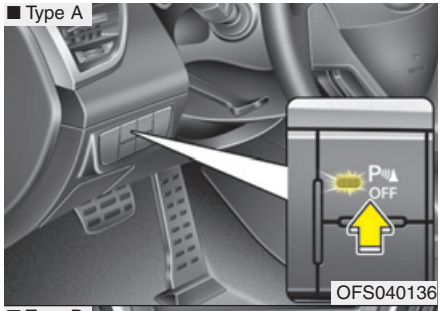

OFS040136

■ Type B

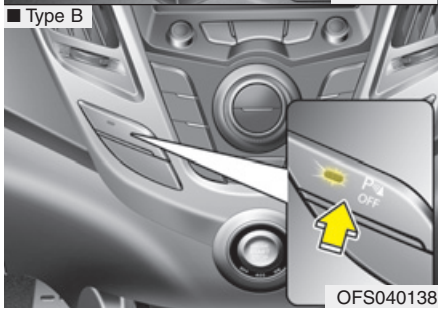

OFS040138

Operation of the rear parking assist system

Operating condition

- This system will activate when the indicator on the rear parking assist OFF button (if equipped) is not illuminated.

If you desire to deactivate the rear parking assist system, press the rear parking assist OFF button again. (The indicator on the button will illuminate.) To turn the system on, press the button again. (The indicator on the button will go off.)

- This system will activate when backing up with the ignition switch ON.

  If the vehicle is moving at a speed over 10 km/h (6 mph), the system may not be activated correctly.
- The sensing distance while the rear parking assist system is in operation is approximately 120 cm (47 in.).
- When more than two objects are sensed at the same time, the closest one will be recognized first.

Types of warning sound

- When an object is 120 cm to 81 cm (47 in. to 32 in.) from the rear bumper: Buzzer beeps intermittently
- When an object is 80 cm to 41 cm (31 in. to 16 in.) from the rear bumper: Buzzer beeps more frequently
- When an object is within 40 cm (15 in.) of the rear bumper:

  Buzzer sounds continuously.

Type of the warning indicator (if equipped)

Distance from object	Warning indicator
Less than 40 cm (15 in.)	*1
41cm ~80 cm (16 in. ~ 31 in.)	*1
81cm ~ 120 cm (32 in. ~ 47 in.)	*1

*1: It indicates the range of sensed object by each sensor. (Left, Center, Right)

❈ In case the object is between or close to the sensors, the indicator could be different.

Non-operational conditions of rear parking assist system

The rear parking assist system may not operate properly when:

1. Moisture is frozen to the sensor. (It will operate normally when the moisture has been cleared.)
2. The sensor is covered with foreign matter, such as snow or water, or the sensor cover is blocked. (It will operate normally when the material is removed or the sensor is no longer blocked.)
3. Driving on uneven road surfaces (unpaved roads, gravel, bumps, gradient).
4. Objects generating excessive noise (vehicle horns, loud motorcycle engines, or truck air brakes) are within range of the sensor.
5. Heavy rain or water spray exists.
6. Wireless transmitters or mobile phones are within range of the sensor.
7. Trailer towing.

The detecting range may decrease when:

1. The sensor is stained with foreign matter such as snow or water. (The sensing range will return to normal when removed.)
2. Outside air temperature is extremely hot or cold.

The following objects may not be recognized by the sensor:

1. Sharp or slim objects such as ropes, chains or small poles.
2. Objects which tend to absorb the sensor frequency such as clothes, spongy material or snow.
3. Undetectable objects smaller than 1 m (40 in.) and narrower than 14 cm (6 in.) in diameter.

Rear parking assist system precautions

- The rear parking assist system may not sound sequentially depending on the speed and shapes of the objects detected.
- The rear parking assist system may malfunction if the vehicle bumper height or sensor installation has been modified or damaged. Any non-factory installed equipment or accessories may also interfere with the sensor performance.
- The sensor may not recognize objects less than 40 cm (15 in.) from the sensor, or it may sense an incorrect distance. Use caution.
- When the sensor is frozen or stained with snow, dirt, or water, the sensor may be inoperative until the stains are removed using a soft cloth.
- Do not push, scratch or strike the sensor. Sensor damage could occur.

✻ NOTICE

This system can only sense objects within the range and location of the sensors; it can not detect objects in other areas where sensors are not installed. Also, small or slim objects, such as poles or objects located between sensors may not be detected by the sensors.
Always visually check behind the vehicle when backing up.
Be sure to inform any drivers of the vehicle that may be unfamiliar with the system regarding the systems capabilities and limitations.

⚠ WARNING

Pay close attention when the vehicle is driven close to objects on the road, particularly pedestrians, and especially children. Be aware that some objects may not be detected by the sensors, due to the object's distance, size or material, all of which can limit the effectiveness of the sensor. Always perform a visual inspection to make sure the vehicle is clear of all obstructions before moving the vehicle in any direction.

Self-diagnosis (if equipped)

When you shift the gear to the R (Reverse) position and if one or more of the below occurs you may have a malfunction in the rear parking assist system.

- You don't hear an audible warning sound or if the buzzer sounds intermittently.
- is displayed. (if equipped)
  (blinks)

If this occurs, we recommend that the system be checked by an authorized HYUNDAI dealer.

⚠ WARNING

Your new vehicle warranty does not cover any accidents or damage to the vehicle or injuries to its occupants due to a rear parking assist system malfunction. Always drive safely and cautiously.

REARVIEW CAMERA (IF EQUIPPED)

OFS040081

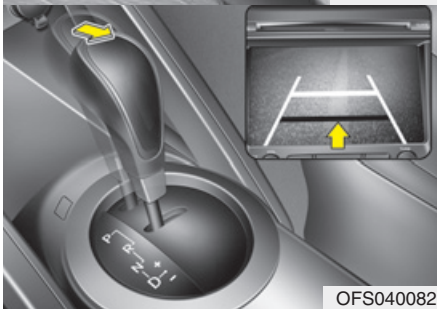
OFS040082

The rearview camera will activate when the back-up light is ON with the ignition switch ON and the shift lever in the R (Reverse) position.

This system is a supplemental system that shows behind the vehicle through the rearview display mirror while backing-up.

✻ NOTICE

The warning "Warning ! Check surroundings for safety " will appear on the rearview display when the rearview camera is activated.

⚠ WARNING

- **This system is a supplementary function only. It is the responsibility of the driver to always check the inside/outside rearview mirror and the area behind the vehicle before and while backing up because there is a dead zone that can't be seen through the camera.**
- **Always keep the camera lens clean. If lens is covered with foreign matter, the camera may not operate normally.**

HAZARD WARNING FLASHER

OFS040083

The hazard warning flasher should be used whenever you find it necessary to stop the vehicle in a hazardous location. When you must make such an emergency stop, always pull off the road as far as possible.

The hazard warning lights are turned on by pushing in the hazard switch. Both turn signal lights will blink. The hazard warning lights will operate even though the key is not in the ignition switch.

To turn the hazard warning lights off, push the switch again.

LIGHTING

Battery saver function

- The purpose of this feature is to prevent the battery from being discharged. The system automatically turns off the parking lights when the driver removes the ignition key and opens the driver-side door.
- With this feature, the parking lights will turn off automatically if the driver parks on the side of road at night.

  If necessary, to keep the lights on when the ignition key is removed, perform the following:

  1) Open the driver-side door.
  2) Turn the parking lights OFF and ON again using the light switch on the steering column.

Headlight escort function (if equipped)

If you turn the ignition switch to the ACC or OFF position with the headlights ON, the headlights (and/or tail lights) remain on for about 5 minutes. However, with the engine off if the driver's door is opened and closed, the headlights (and/or tail lights) are turned off after 15 seconds.

The headlights (and/or tail lights) can be turned off by pressing the lock button on the transmitter (or smart key) twice or turning the light switch to the OFF or Auto position.

However, if you turn the light switch to the Auto position when it is dark outside, the headlights will not be turned off.

⚠ CAUTION

If the driver gets out of the vehicle through other doors (except driver's door), the battery saver function does not operate and the headlight escort function does not turn off automatically. Therefore, It causes the battery to be discharged. In this case, make sure to turn off the lamp before getting out of the vehicle.

Headlight welcome function (if equipped)

When the headlight switch is in the ON or AUTO position and all doors (and tailgate) are closed and locked, if you press the door unlock button on the transmitter (or smart key), the headlights will come on for about 15 seconds.

If the headlight switch is in the AUTO position, the function can only operate at night.

At this time, if you press the door unlock button again or door lock button on the transmitter (or smart key), the headlights will turn off immediately.

■ Type A

OED040045

■ Type B

OBK049045

Lighting control

The light switch has a Headlight and a Parking light position.

To operate the lights, turn the knob at the end of the control lever to one of the following positions:

(1) Off position
(2) Parking light position
(3) Headlight position
(4) Auto light position (if equipped)

■ Type A

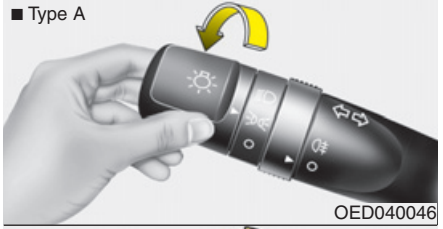

OED040046

■ Type B

OAM049041

Parking light position ( )

When the light switch is in the parking light position (1st position), the tail position, license and instrument panel lights will turn ON.

■ Type A

OED040800

■ Type B

OAM049042

Headlight position ( )

When the light switch is in the headlight position (2nd position), the head, tail, position, license and instrument panel lights are ON.

✻ NOTICE

The ignition switch must be in the ON position to turn on the headlights.

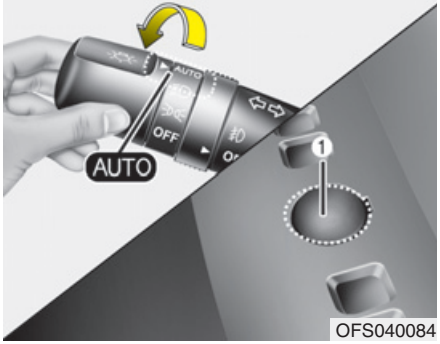

OFS040084

Auto light position (if equipped)

When the light switch is in the AUTO light position, the taillights and headlights will be turned ON or OFF automatically depending on the amount of light outside the vehicle.

⚠ CAUTION

- ***Never place anything over sensor (1) located on the instrument panel, this will ensure better auto-light system control.***
- ***Don't clean the sensor using a window cleaner, the cleanser may leave a light film which could interfere with sensor operation.***
- ***If your vehicle has window tint or other types of metallic coating on the front windshield, the Auto light system may not work properly.***

■ Type A

OED040801

■ Type B

OAM049044

High beam operation

To turn on the high beam headlights, push the lever away from you. Pull it back for low beams. The high beam indicator will light when the headlight high beams are switched on. To prevent the battery from being discharged, do not leave the lights on for a prolonged time while the engine is not running.

⚠ WARNING

Do not use high beam when there are other vehicles. Using high beam could obstruct the other driver's vision.

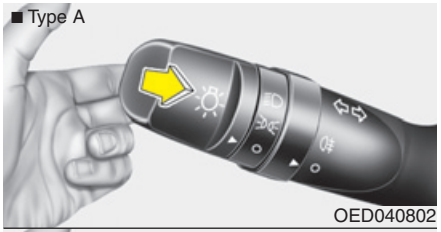

OED040802

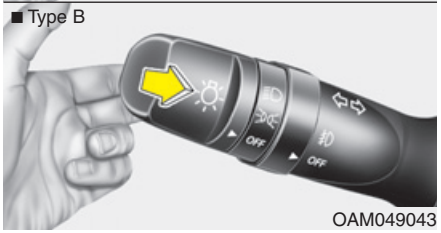

OAM049043

To flash the headlights, pull the lever towards you. It will return to the normal (low beam) position when released. The headlight switch does not need to be on to use this flashing feature.

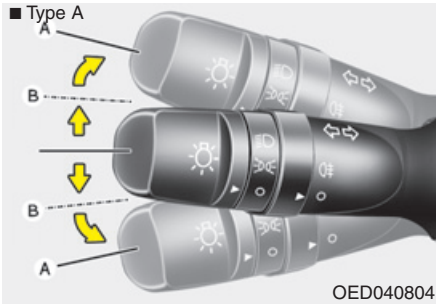

OED040804

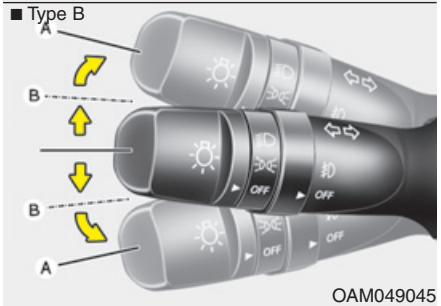

OAM049045

Turn signals and lane change signals

The ignition switch must be on for the turn signals to function. To turn on the turn signals, move the lever up or down (A). The green arrow indicators on the instrument panel indicate which turn signal is operating. They will self-cancel after a turn is completed.

If the indicator continues to flash after a turn, manually return the lever to the off position.

To signal a lane change, move the turn signal lever slightly and hold it in position (B). The lever will return to the off position when released.

If an indicator stays on and does not flash or if it flashes abnormally, one of the turn signal bulbs may be burned out and will require replacement.

One-touch lane change function (if equipped)

To activate an one-touch lane change function, move the turn signal lever slightly and then release it. The lane change signals will blink 3 times.

✻ NOTICE

If an indicator flash is abnormally quick or slow, a bulb may be burned out or have a poor electrical connection in the circuit.

■ Type A

OYN049200

■ Type B

OAM049046

Front fog light (if equipped)

Fog lights are used to provide improved visibility when visibility is poor due to fog, rain or snow, etc. The fog lights will turn on when the fog light switch (1) is turned on after the parklight is turned on.

To turn off the fog lights, turn the fog light switch (1) to the O (Off) position.

⚠ CAUTION

When in operation, the fog lights consume large amounts of vehicle electrical power. Only use the fog lights when visibility is poor.

■ Type A

OED040806

■ Type B

OAM049046L

Rear fog light

To turn the rear fog lights on, turn the rear fog light switch (1) to the on position when the headlight is turned on.

Also, the rear fog lights turn on when the rear fog light switch is turned on after the front fog light switch (if equipped) is turned on and the headlight switch is in the parklight position.

To turn the rear fog lights off, turn the rear fog light switch to the on position again.

Daytime running light (if equipped)

The Daytime Running Lights (DRL) can make it easier for others to see the front of your vehicle during the day. DRL can be helpful in many different driving conditions, and it is especially helpful after dawn and before sunset.

The DRL system will make the headlights turn OFF when:

1. The parklight switch is ON.
2. The engine is OFF.

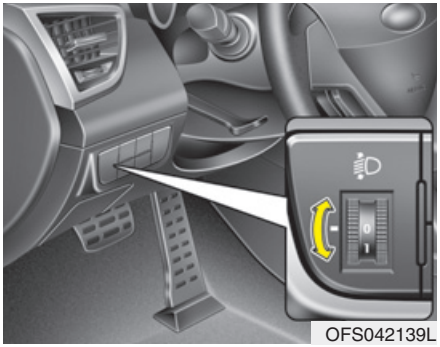

OFS042139L

Headlight leveling device (if equipped)

To adjust the headlight beam level according to the number of the passengers and loading weight in the luggage area, turn the beam leveling switch.

The higher the number of the switch position, the lower the headlight beam level. Always keep the headlight beam at the proper leveling position, or headlights may dazzle other road users.

Listed below are the examples of proper switch settings. For loading conditions other than those listed below, adjust the switch position so that the beam level may be the nearest as the condition obtained according to the list.

Loading condition	Switch position
Driver only	0
Driver + Front passenger	0
Full passengers (including driver)	1
Full passengers (including driver) + Maximum permissible loading	2
Driver + Maximum permissible loading	3

WIPERS AND WASHERS

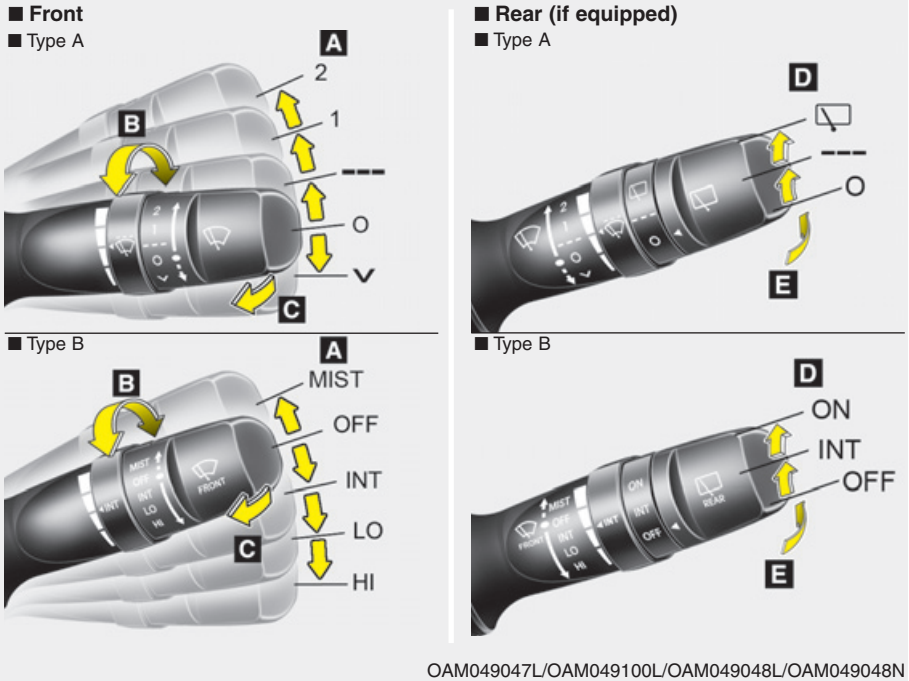

OAM049047L/OAM049100L/OAM049048L/OAM049048N

A : Wiper speed control (front)
- 2/HI – High wiper speed
- 1/LO – Low wiper speed
- ---/INT – Intermittent wipe
- O/OFF – Off
- ∨ /MIST – Single wipe

B : Intermittent control wipe time adjustment

C : Wash with brief wipes (front)*

D : Rear wiper/washer control*
- /ON – Continuous wipe
- ---/INT – Intermittent wipe
- O/OFF – Off

E : Wash with brief wipes (rear)*

* : if equipped

Windshield wipers (front)

Operates as follows when the ignition switch is turned ON.

∨ : For a single wiping cycle, move the lever to this position and release it. The wipers will operate continuously if the lever is held in this position.

O : Wiper is not in operation

--- : Wiper operates intermittently at the same wiping intervals. Use this mode in light rain or mist. To vary the speed setting, turn the speed control knob.

1 : Normal wiper speed

2 : Fast wiper speed

✻ NOTICE

If there is heavy accumulation of snow or ice on the windshield, defrost the windshield for about 10 minutes, or until the snow and/or ice is removed before using the windshield wipers to ensure proper operation.

If you do not remove the snow and/or ice before using the wiper and washer, it may damage the Wiper and washer system.

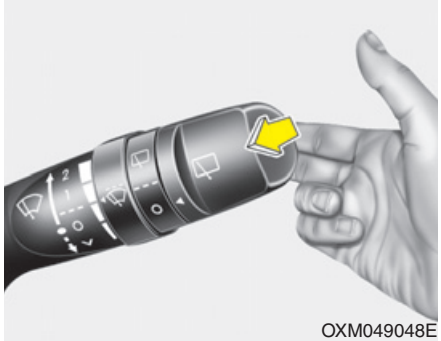

OXM049048E

Windshield washers (front)

In the O (Off) position, pull the lever gently toward you to spray washer fluid on the windshield and to run the wipers 1-3 cycles.

Use this function when the windshield is dirty.

The spray and wiper operation will continue until you release the lever.

If the washer does not work, check the washer fluid level. If the fluid level is not sufficient, you will need to add appropriate non-abrasive windshield washer fluid to the washer reservoir.

The reservoir filler neck is located in the front of the engine compartment on the passenger side.

⚠ CAUTION

To prevent possible damage to the washer pump, do not operate the washer when the fluid reservoir is empty.

⚠ WARNING

Do not use the washer in freezing temperatures without first warming the windshield with the defrosters; the washer solution could freeze on the windshield and obscure your vision.

⚠ CAUTION

- ***To prevent possible damage to the wipers or windshield, do not operate the wipers when the windshield is dry.***
- ***To prevent damage to the wiper blades, do not use gasoline, kerosene, paint thinner, or other solvents on or near them.***
- ***To prevent damage to the wiper arms and other components, do not attempt to move the wipers manually.***
- ***To prevent possible damage to the wipers and washer system, use anti-freezing washer fluids in the winter season or cold weather.***

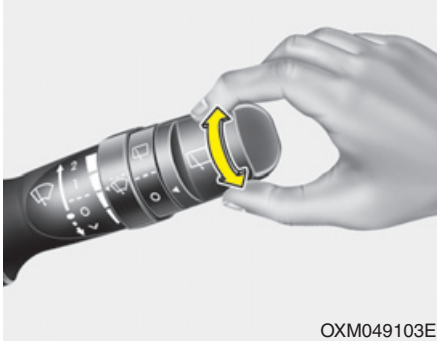

OXM049103E

Rear window wiper and washer switch (if equipped)

The rear window wiper and washer switch is located at the end of the wiper and washer switch lever. Turn the switch to desired position to operate the rear wiper and washer.

- - Normal wiper operation
- --- - Intermittent wipe
- O - Wiper is not in operation

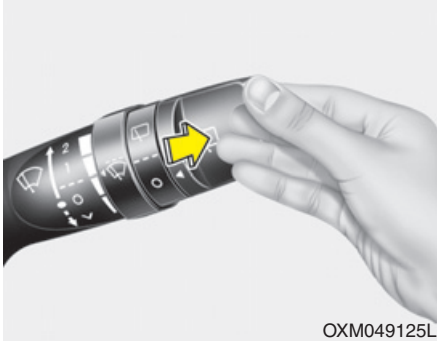

Push the lever away from you to spray rear washer fluid and to run the rear wipers 1~3 cycles. The spray and wiper operation will continue until you release the lever.

INTERIOR LIGHT

ORB040057

Room lamp

(1) Map lamp (if equipped)

Push the lamp lens to turn the light on or off. This light produces a spot beam for convenient use as a map lamp at night or as a personal lamp for the driver and the front passenger.

(2) DOOR

The light comes on when any door is opened regardless of the ignition switch position. When doors are unlocked by the transmitter or smart key, or the key is removed from the ignition switch, the light comes on for approximately 30 seconds as long as any door is not opened.

The light goes out gradually after approximately 30 seconds if the door is closed. However, if the ignition switch is ON or all doors are locked, the light will turn off immediately.

If a door is opened with the ignition switch in the ACC or LOCK position, the light stays on for about 20 minutes. However, if a door is opened with the ignition switch in the ON position, the light stays on continuously.

ON

In the on position, the light stays on at all times.

OFF

In the off position, the light stays off at all times, even when a door is open.

⚠ CAUTION

Do not use the interior lights for extended periods when engine is not running.

It may cause battery discharge.

⚠ WARNING

Do not use the interior lights when driving in the dark. Accidents could happen because the view may be obscured by interior lights.

Interior lamp AUTO cut

- When all entrances are closed, if you lock the vehicle by using the transmitter or the smart key, all interior lamp will be off within 5 seconds.
- If you do not operate anything in the vehicle after turning off the engine, the lights will turn off after 20 minutes.

ORB040361

Room lamp (if equipped)

• ON (1):

In the ON position, the light stays on at all times.

• DOOR (2) :

In the DOOR position, the light comes on when any door is opened regardless of the ignition switch position.

When doors are unlocked by the transmitter (or smart key), the light comes on for approximately 30 seconds as long as any door is not open. The light goes out gradually after approximately 30 seconds if the door is closed. However, if the ignition switch is ON or all doors are locked, the light will turn off immediately.

If a door is opened with the ignition switch in the ACC or LOCK position, the light stays on for about 20 minutes. However, if a door is opened with the ignition switch in the ON position, the light stays on continuously.

• OFF (3) :

In the OFF position, the light stays off at all times even when a door is open.

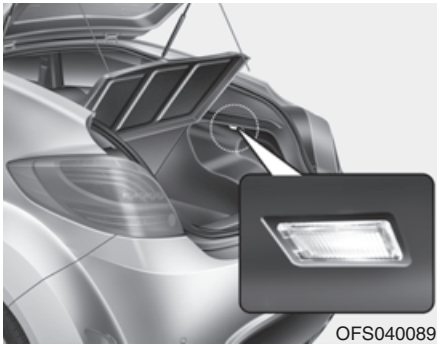
OFS040089

Tailgate room lamp

The tailgate room lamp comes on when the tailgate is opened.

⚠ CAUTION

The tailgate room lamp comes on as long as the tailgate lid opens. To prevent unnecessary charging system drain, close the tailgate lid securely after using the tailgate room.

✻ NOTICE

Make sure to close the tailgate securely. If it remains open while engine is not running, it may cause battery discharge because luggage room lamp remains on.

OLM049105

Vanity mirror lamp

Push the switch to turn the light on or off.

- : The lamp will turn on if this button is pressed.
- ◯ : The lamp will turn off if this button is pressed.

⚠ CAUTION - Vanity mirror lamp (if equipped)

Always have the switch in the off position when the vanity mirror lamp is not in use. If the sunvisor is closed without the lamp off, it may discharge the battery or damage the sunvisor.

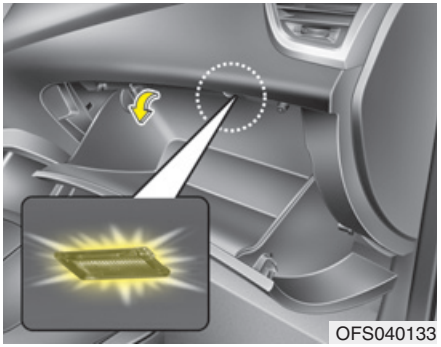
OFS040133

Glove box lamp (if equipped)

The glove box lamp comes on when the glove box is opened.

⚠ CAUTION

To prevent unnecessary charging system drain, close the glove box securely after using the glove box.

DEFROSTER

⚠ CAUTION

To prevent damage to the conductors bonded to the inside surface of the rear window, never use sharp instruments or window cleaners containing abrasives to clean the window.

✻ NOTICE

If you want to defrost and defog the front windshield, refer to "Windshield defrosting and defogging" in this section.

OFS040090

Rear window defroster

The defroster heats the window to remove frost, fog and thin ice from the interior and exterior of the rear window, while engine is running.
To activate the rear window defroster, press the rear window defroster button located in the center facia switch panel.
The indicator on the rear window defroster button illuminates when the defroster is ON.
If there is heavy accumulation of snow on the rear window, brush it off before operating the rear defroster.
The rear window defroster automatically turns off after approximately 20 minutes or when the ignition switch is turned off.
To turn off the defroster, press the rear window defroster button again.

Outside mirror defroster (if equipped)

If your vehicle is equipped with outside mirror defrosters, they will operate at the same time when you turn on the rear window defroster.

Front wiper deicer (if equipped)

If your vehicle is equipped with front wiper deicer, they will operate at the same time when you turn on the rear window defroster.

MANUAL CLIMATE CONTROL SYSTEM (IF EQUIPPED)

1. A/C (Air conditioning) button
2. Air intake control button
3. Rear window defroster button
4. Mode selection button
5. Fan speed control knob
6. Temperature control knob
7. Front windshield defroster button
8. Max A/C button

⚠ CAUTION

Operating the blower when the ignition switch is in the ON position could cause the battery to discharge. Operate the blower when the engine is running.

OFS040091

Heating and air conditioning

1. Start the engine.
2. Set the mode to the desired position.
   To improve the effectiveness of heating and cooling :
   - Heating:
   - Cooling:
3. Set the temperature control to the desired position.
4. Set the air intake control to the outside (fresh) air position.
5. Set the fan speed control to the desired speed.
6. If air conditioning is desired, turn the air conditioning system (if equipped) on.

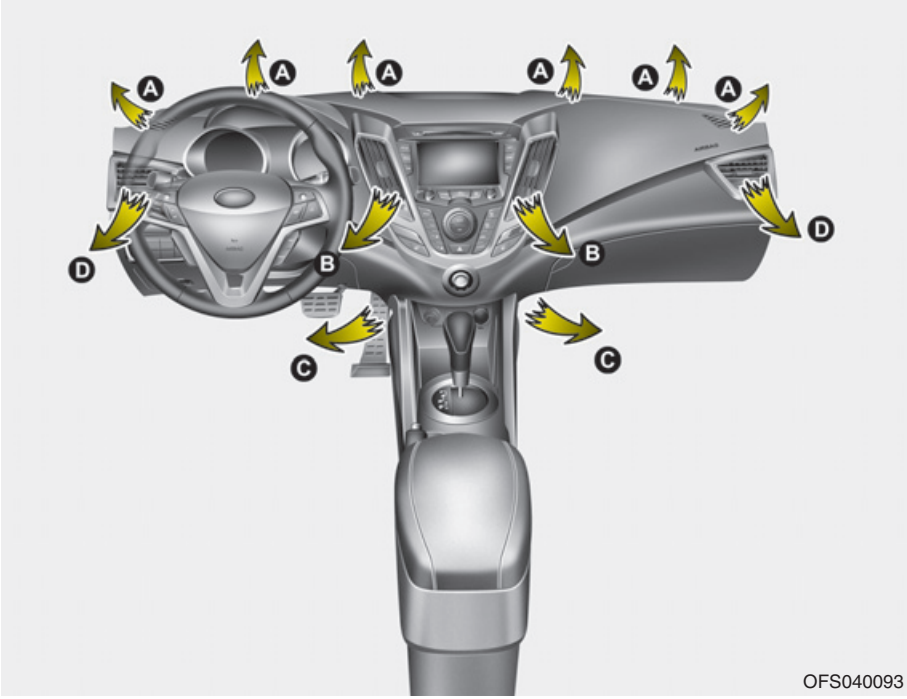

OFS040093

OFS040092

Mode selection

The mode selection button controls the direction of the air flow through the ventilation system.

Air can be directed to the floor, dashboard outlets, or windshield. Five symbols are used to represent Face, Bi-Level, Floor, Floor-Defrost and Defrost air position.

Face-Level (B, D)

Air flow is directed toward the upper body and face. Additionally, each outlet can be controlled to direct the air discharged from the outlet.

Bi-Level (B, D, C)

Air flow is directed towards the face and the floor.

Floor-Level (C, A, D)

Most of the air flow is directed to the floor, with a small amount of the air being directed to the windshield and side window defrosters.

Floor/Defrost-Level (A, C, D)

Most of the air flow is directed to the floor and the windshield with a small amount directed to the side window defrosters.

Defrost-Level (A, D)

Most of the air flow is directed to the windshield with a small amount of air directed to the side window defrosters.

OFS040094

MAX A/C-Level (B, D) (if equipped)

The MAX A/C mode is used to cool the inside of the vehicle faster.

Air flow is directed toward the upper body and face.

In this mode, the air conditioning and the recirculated air position will be selected automatically.

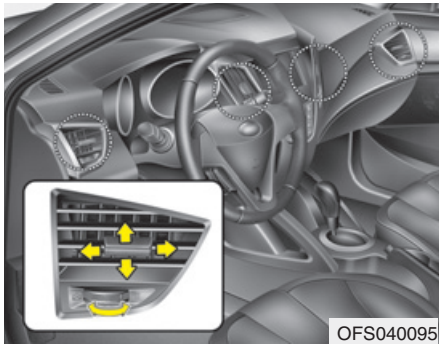
OFS040095

Instrument panel vents

The outlet vents can be opened or closed separately using the thumbwheel. To close the vent, rotate it left to the maximum position.

Also, you can adjust the direction of air delivery from these vents using the vent control lever as shown.

OFS040096

Temperature control

The temperature control knob allows you to control the temperature of the air flowing from the ventilation system. To change the air temperature in the passenger compartment, turn the knob to the right position for warm and hot air or left position for cooler air.

OFS040097

Air intake control

This is used to select outside (fresh) air position or recirculated air position.

To change the air intake control position, press the control button.

Recirculated air position

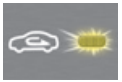

With the recirculated air position selected, air from the passenger compartment will be drawn through the heating system and heated or cooled according to the function selected.

Outside (fresh) air position

With the outside (fresh) air position selected, air enters the vehicle from outside and is heated or cooled according to the function selected.

✻ NOTICE

It should be noted that prolonged operation of the heater in the recirculated air position (without air conditioning selected) will cause fogging of the windshield and side windows and the air within the passenger compartment will become stale.

In addition, prolonged use of the air conditioning with the recirculated air position selected will result in excessively dry air in the passenger compartment.

⚠ WARNING

- **Continuous operation of the climate control system in the recirculated air position may allow humidity to increase inside the vehicle which may fog the glass and obscure visibility.**
- **Do not sleep in a vehicle with air conditioning or heating system on. It may cause serious harm or death due to a drop in the oxygen level and/or body temperature.**
- **Continuous operation of the climate control system in the recirculated air position can cause drowsiness or sleepiness, and loss of vehicle control. Set the air intake control to the outside (fresh) air position as much as possible while driving.**

OFS040098

Fan speed control

The ignition switch must be in the ON position for fan operation.

The fan speed control knob allows you to control the fan speed of the air flowing from the ventilation system. To change the fan speed, turn the knob to the right for higher speed or left for lower speed.

Setting the fan speed control knob to the “0” position turns off the fan.

OFS043098A

To turn off the blowers

To turn off the blowers, turn the fan speed control knob to the “0” position.

OFS040099

Air conditioning (A/C)

Press the A/C button to turn the air conditioning system on (indicator light will illuminate), after setting the fan speed. Press the button again to turn the air conditioning system off.

System operation

Ventilation

1. Set the mode to the position.
2. Set the air intake control to the outside (fresh) air position.
3. Set the temperature control to the desired position.
4. Set the fan speed control to the desired speed.

Heating

1. Set the mode to the position.
2. Set the air intake control to the outside (fresh) air position.
3. Set the temperature control to the desired position.
4. Set the fan speed control to the desired speed.
5. If dehumidified heating is desired, turn the air conditioning system (if equipped) on.

- If the windshield fogs up, set the mode to the or position.

Operation Tips

- To keep dust or unpleasant fumes from entering the car through the ventilation system, temporarily set the air intake control to the recirculated air position. Be sure to return the control to the fresh air position when the irritation has passed to keep fresh air in the vehicle. This will help keep the driver alert and comfortable.
- Air for the heating/cooling system is drawn in through the grilles just ahead of the windshield. Care should be taken that these are not blocked by leaves, snow, ice or other obstructions.
- To prevent interior fog on the windshield, set the air intake control to the fresh air position and fan speed to the desired position, turn on the air conditioning system, and adjust the temperature control to desired temperature.

Air conditioning (if equipped)

HYUNDAI Air Conditioning Systems are filled with environmentally friendly R-134a refrigerant.

1. Start the engine. Push the air conditioning button.
2. Set the mode to the position.
3. Set the air intake control to the outside air or recirculated air position.
4. Adjust the fan speed control and temperature control to maintain maximum comfort.

✻ NOTICE

- **When using the air conditioning system, monitor the temperature gauge closely while driving up hills or in heavy traffic when outside temperatures are high. Air conditioning system operation may cause engine overheating. Continue to use the blower fan but turn the air conditioning system off if the temperature gauge indicates engine overheating.**
- **When opening the windows in humid weather air conditioning may create water droplets inside the vehicle. Since excessive water droplets may cause damage to electrical equipment, air conditioning should only be used with the windows closed.**

Air conditioning system operation tips

- If the vehicle has been parked in direct sunlight during hot weather, open the windows for a short time to let the hot air inside the vehicle escape.
- To help reduce moisture inside of the windows on rainy or humid days, decrease the humidity inside the vehicle by operating the air conditioning system.
- During air conditioning system operation, you may occasionally notice a slight change in engine speed as the air conditioning compressor cycles. This is a normal system operation characteristic.
- Use the air conditioning system every month only for a few minutes to ensure maximum system performance.
- When using the air conditioning system, you may notice clear water dripping (or even puddling) on the ground under the passenger side of the vehicle. This is a normal system operation characteristic.
- Operating the air conditioning system in the recirculated air position provides maximum cooling, however, continual operation in this mode may cause the air inside the vehicle to become stale.
- During cooling operation, you may occasionally notice a misty air flow because of rapid cooling and humid air intake. This is a normal system operation characteristics.

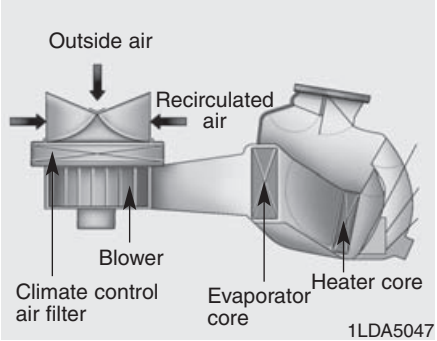

Climate control air filter (if equipped)

The climate control air filter installed behind the glove box filters the dust or other pollutants that come into the vehicle from the outside through the heating and air conditioning system. If dust or other pollutants accumulate in the filter over a period of time, the air flow from the air vents may decrease, resulting in moisture accumulation on the inside of the windshield even when the outside (fresh) air position is selected. If this happens, we recommend that the climate control air filter be replaced by an authorized HYUNDAI dealer.

✻ NOTICE

- **Replace the filter according to the Maintenance Schedule.**
  If the vehicle is being driven in severe conditions such as dusty, rough roads, more frequent climate control air filter inspections and changes are required.
- **When the air flow rate suddenly decreases, we recommend that the system be checked by an authorized HYUNDAI dealer.**

Checking the amount of air conditioner refrigerant and compressor lubricant

When the amount of refrigerant is low, the performance of the air conditioning is reduced. Overfilling also has a negative influence on the air conditioning system.

Therefore, we recommend that the system be inspected by an authorized HYUNDAI dealer.

✻ NOTICE

It is important that the correct type and amount of oil and refrigerant is used. Otherwise, damage to the compressor and abnormal system operation may occur.

⚠ WARNING

For more detailed information, we recommend that you contact an authorized HYUNDAI dealer.

Improper service may cause serious injury to the person performing the service.

AUTOMATIC CLIMATE CONTROL SYSTEM (IF EQUIPPED)

1. A/C (Air conditioning) button
2. Air intake control button
3. Rear window defroster button
4. Mode selection button
5. Temperature control knob
6. Fan speed control button
7. Auto button
8. OFF button
9. Front windshield defroster button
10. Climate information button

⚠ CAUTION

Operating the blower when the ignition switch is in the ON position could cause the battery to discharge. Operate the blower when the engine is running.

OFS040100

OFS040101

Automatic heating and air conditioning

1. Push the AUTO button. It is indicated by AUTO on the display.

The modes, fan speeds, air intake and air-conditioning will be controlled automatically by temperature setting.

2. Turn the temperature control knob to set the desired temperature.

OFS040105

✻ NOTICE

- **To turn the automatic operation off, select any button of the following:**
  - Mode selection button
  - Front windshield defroster button
  - Fan speed control knob
  The selected function will be controlled manually while other functions operate automatically.
- **For your convenience and to improve the effectiveness of the climate control, use the AUTO button and set the temperature to 23°C/73°F.**
- **Regardless of the temperature setting, when using automatic operation, the air conditioning system can automatically turn on to decrease the humidity inside the vehicle, even if the temperature is set to warm.**

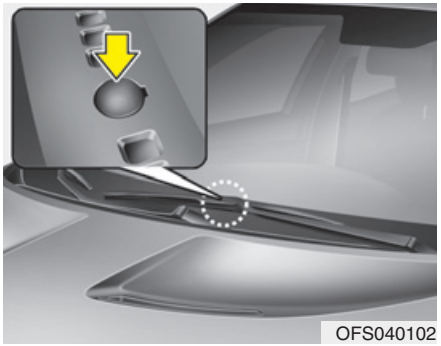
OFS040102

✻ NOTICE

Never place anything over the sensor located on the instrument panel to ensure better control of the heating and cooling system.

Manual heating and air conditioning

The heating and cooling system can be controlled manually by pressing buttons other than the AUTO button. In this case, the system works sequentially according to the order of buttons selected.

When pressing any button (or turning any knob) except AUTO button while automatic operation, the functions not selected will be controlled automatically.

1. Start the engine.
2. Set the mode to the desired position.
3. Set the temperature control to the desired position.
4. Set the air intake control to the outside (fresh) air position.
5. Set the fan speed control to the desired speed.
6. If air conditioning is desired, turn the air conditioning system on.

Press the AUTO button in order to convert to full automatic control of the system.

Mode selection

The mode selection button controls the direction of the air flow through the ventilation system.

The air flow outlet port is converted as follows:

Refer to the illustration in the “Manual climate control system”.

Face-Level

Air flow is directed toward the upper body and face. Additionally, each outlet can be controlled to direct the air discharged from the outlet.

Bi-Level

Air flow is directed towards the face and the floor.

Floor-Level

Most of the air flow is directed to the floor, with a small amount of the air being directed to the windshield and side window defrosters.

Floor/Defrost-Level

Most of the air flow is directed to the floor and the windshield with a small amount directed to the side window defrosters.

OFS040104

Defrost mode

When you select the defrost mode, the following system settings will be made automatically:

- The air conditioning system will be turned on.
- The outside(fresh) air position will be selected.
- The fan speed will be set to the high speed.

To turn the defrost mode off, press the mode button or defrost button again or AUTO button.

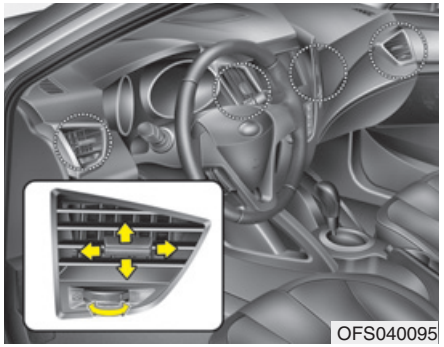
OFS040095

Instrument panel vents

The outlet port can be opened or closed separately using the horizontal thumb-wheel. To close the vent, rotate it left to the maximum position. To open the vent, rotate it right to the desired position.

Also, you can adjust the direction of air delivered from these vents using the vent control lever as shown.

OFS040105

Temperature control

The temperature will increase to the maximum (HI) by turning the knob to the right extremely.

The temperature will decrease to the minimum (Lo) by turning the knob to the left extremely.

When turning the knob, the temperature will increase or decrease by 0.5°C/1°F. When set to the lowest temperature setting, the air conditioning will operate continuously.

Temperature conversion

This allows you to set the unit of the distance and the temperature to the celsius and the fahrenheit on your navigation system.

- Temperature: Change the temperature between the “C” and “F”.

OFS040106

Air intake control

This is used to select outside (fresh) air position or recirculated air position.

To change the air intake control position, push the control button.

Recirculated air position

The indicator light on the button illuminates when the recirculated air position is selected.

With the recirculated air position selected, air from passenger compartment will be drawn through the heating system and heated or cooled according to the function selected.

Outside (fresh) air position

The indicator light on the button does not illuminate when the outside (fresh) air position is selected.

With the outside (fresh) air position selected, air enters the vehicle from outside and is heated or cooled according to the function selected.

✻ NOTICE

It should be noted that prolonged operation of the heating in recirculated air position will cause fogging of the windshield and side windows and the air within the passenger compartment will become stale.
In addition, prolonged use of the air conditioning with the recirculated air position selected, will result in excessively dry air in the passenger compartment.

⚠ WARNING

- **Continued climate control system operation in the recirculated air position may allow humidity to increase inside vehicle which may fog the glass and obscure visibility.**
- **Do not sleep in a vehicle with air conditioning or heating system on. It may cause serious harm or death due to a drop in the oxygen level and/or body temperature.**
- **Continued climate control system operation in the recirculated air position can cause drowsiness or sleepiness, and loss of vehicle control. Set the air intake control to the outside (fresh) air position as much as possible while driving.**

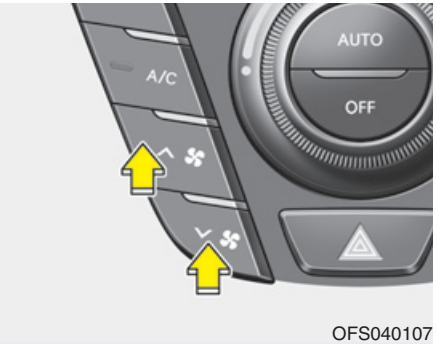

OFS040107

Fan speed control

The fan speed can be set to the desired speed by pressing the fan speed control switch. To change the fan speed, press (∧ ✣) the switch for higher speed, or push (∨ ✣) the switch for lower speed.

To turn the fan speed control off, press the front blower OFF button.

OFS040108

Air conditioning

Press the A/C button to turn the air conditioning system on (indicator light will illuminate).

Press the button again to turn the air conditioning system off.

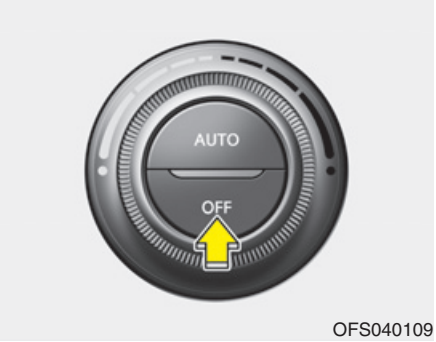

OFS040109

OFF mode

Push the OFF button to turn off the air climate control system. However you can still operate the mode and air intake buttons as long as the ignition switch is in the ON position.

✻ NOTICE

If you push the "CLIMATE" button, the climate information will be displayed on screen.

Climate control air filter (if equipped)

The climate control air filter installed behind the glove box filters the dust or other pollutants that come into the vehicle from the outside through the heating and air conditioning system. If dust or other pollutants accumulate in the filter over a period of time, the air flow from the air vents may decrease, resulting in moisture accumulation on the inside of the windshield even when the outside (fresh) air position is selected. If this happens, we recommend that the climate control air filter be replaced by an authorized HYUNDAI dealer.

✻ NOTICE

- **Replace the filter according to the Maintenance Schedule.**
  If the vehicle is being driven in severe conditions such as dusty, rough roads, more frequent climate control air filter inspections and changes are required.
- **When the air flow rate suddenly decreases, we recommend that the system be checked by an authorized HYUNDAI dealer.**

Checking the amount of air conditioner refrigerant and compressor lubricant

When the amount of refrigerant is low, the performance of the air conditioning is reduced. Overfilling also has a negative influence on the air conditioning system.

Therefore, we recommend that the system be inspected by an authorized HYUNDAI dealer.

✻ NOTICE

It is important that the correct type and amount of oil and refrigerant is used. Otherwise, damage to the compressor and abnormal system operation may occur.

⚠ WARNING

For more detailed information, we recommend that you contact an authorized HYUNDAI dealer. Improper service may cause serious injury to the person performing the service.

WINDSHIELD DEFROSTING AND DEFOGGING

⚠ WARNING - Windshield heating

Do not use the or position during cooling operation in extremely humid weather. The difference between the temperature of the outside air and that of the windshield could cause the outer surface of the windshield to fog up, causing loss of visibility. In this case, set the mode selection knob or button to the position and fan speed control knob or button to lower speed.

- For maximum defrosting, set the temperature control to the extreme right/hot position and the fan speed control to the highest speed.
- If warm air to the floor is desired while defrosting or defogging, set the mode to the floor-defrost position.
- Before driving, clear all snow and ice from the windshield, rear window, outside rear view mirrors, and all side windows.
- Clear all snow and ice from the hood and air inlet in the cowl grill to improve heater and defroster efficiency and to reduce the probability of fogging up inside of the windshield.

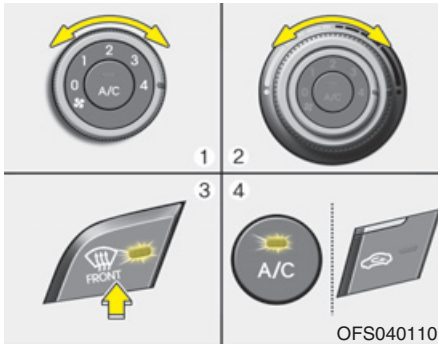

Manual climate control system

To defog inside windshield

1. Select any fan speed except “0” position.
2. Select desired temperature.
3. Select the or position.
4. The outside (fresh) air will be selected automatically. Additionally, the air conditioning will automatically operate if the mode is selected to the position.

If the air conditioning and outside (fresh) air position are not selected automatically, press the corresponding button manually.

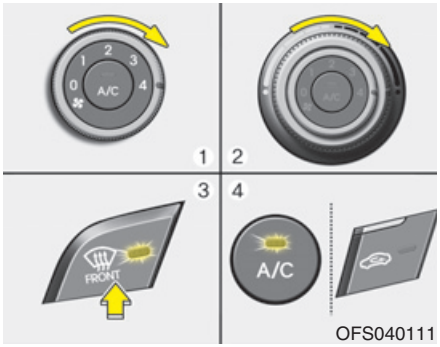

To defrost outside windshield

1. Set the fan speed to the highest (extreme right) position.
2. Set the temperature to the extreme hot position.
3. Select the position.
4. The outside (fresh) air and air conditioning will be selected automatically.

If the air-conditioning, outside (fresh) air position and higher fan speed are not selected automatically, adjust the corresponding button or knob manually.

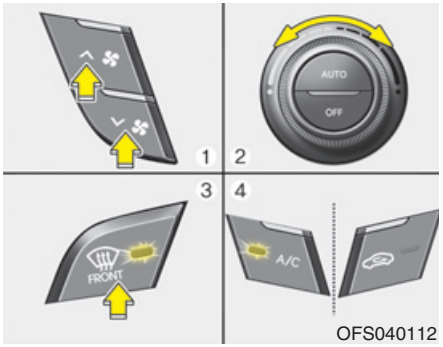

Automatic climate control system

To defog inside windshield

1. Select desired fan speed.
2. Select desired temperature.
3. Press the defroster button ( ).
4. The air-conditioning will turn on according to the detected ambient temperature, outside (fresh) air position and higher fan speed will be selected automatically.
5. If blower fan speed is low, the blower fan speed will be set middle speed automatically.

If the air-conditioning, outside (fresh) air position and higher fan speed are not selected automatically, adjust the corresponding button or knob manually.

If the position is selected, lower fan speed is controlled to higher fan speed.

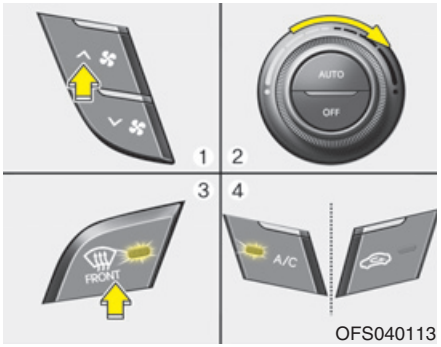

To defrost outside windshield

1. Set fan speed to the highest position.
2. Set temperature to the extreme hot (HI) position.
3. Press the defroster button ( ).
4. The air-conditioning will turn on according to the detected ambient temperature and outside (fresh) air position will be selected automatically.
5. If the air-conditioning, outside (fresh) air position and higher fan speed are not selected automatically, adjust the corresponding button or knob manually.

If the position is selected, lower fan speed is controlled to higher fan speed.

Defogging logic

To reduce the probability of fogging up the inside of the windshield, the air intake or air conditioning are controlled automatically according to certain conditions such as or position. To cancel or return the defogging logic, do the following.

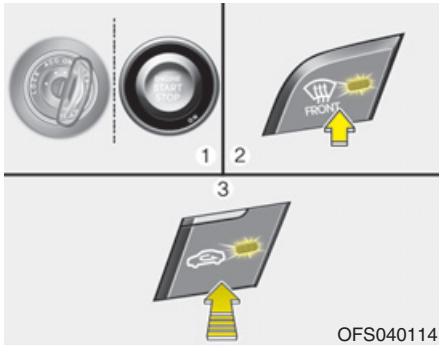

OFS040114

Manual climate control system

1. Turn the ignition switch to the ON position.
2. Select the defrost button ( ).
3. Press the air intake control button at least 5 times within 3 seconds.

The indicator on the air intake button blinks 3 times with 0.5 seconds of interval. It indicates that the defogging logic is canceled or returned to the programmed status.

If the battery has been discharged or disconnected, it resets to the defog logic status.

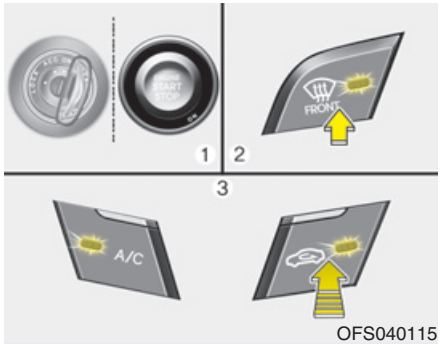

OFS040115

Automatic climate control system

1. Turn the ignition switch to the ON position.
2. Press the defrost button ( ).
3. While holding the air conditioning (A/C) button, press the air intake control button at least 5 times within 3 seconds.

The A/C display blinks 3 times with 0.5 seconds of interval. It indicates that the defogging logic is canceled or returned to the programmed status.

If the battery has been discharged or disconnected, it resets to the defog logic status.

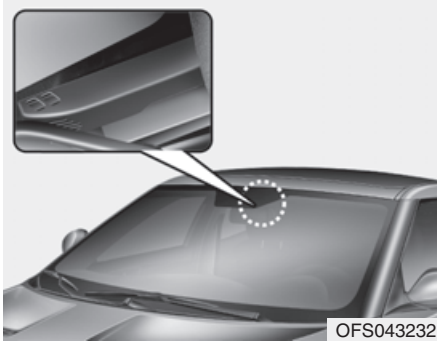

Auto defogging system (Only for automatic climate control system, if equipped)

Auto defogging reduces the possibility of fogging up the inside of the windshield by automatically sensing the moisture of inside the windshield.

The auto defogging system operates when the AUTO mode is on.

This indicator illuminates when the auto defogging system senses the moisture of inside the windshield and operates.

If more moisture is in the vehicle, higher steps operate as follow.

Step 1 : Outside air position
Step 2 : Blowing air flow toward the windshield
Step 3 : Increasing air flow toward the windshield
Step 4 : Operating the air conditioning

If your vehicle is equipped with the auto defogging system, it is automatically activated when the conditions are met. However, if you would like to cancel the auto defogging system, press the front defroster button 4 times within 2 seconds while pressing the AUTO button. The indicator will blink 3 times to notify you that the system is cancelled. To use the auto defogging system again, follow the procedures mentioned above.

If the battery has been disconnected or discharged, it resets to the auto defogging status.

✻ NOTICE

If the A/C off is manually selected while the auto defogging system is on, the auto defogging indicator will blink 3 times to give notice that the A/C off can not be selected.

⚠ CAUTION

Do not remove the sensor cover located on the upper end of the driver side windshield glass. Damage to the system parts could occur and may not be covered by your vehicle warranty.

STORAGE COMPARTMENT

⚠ CAUTION

- *To avoid possible theft, do not leave valuables in the storage compartment.*
- *Always keep the storage compartment covers closed while driving. Do not attempt to place so many items in the storage compartment that the storage compartment cover cannot close securely.*

⚠ WARNING - Flammable materials

Do not store cigarette lighters, propane cylinders, or other flammable/explosive materials in the vehicle. These items may catch fire and/or explode if the vehicle is exposed to hot temperatures for extended periods.

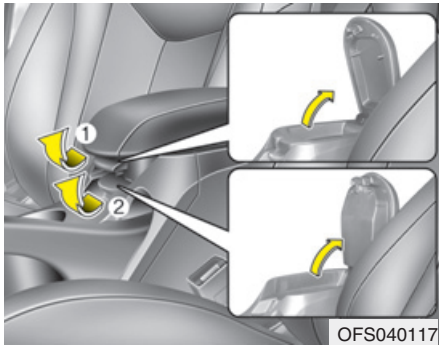

OFS040117

Center console storage

These compartments can be used to store small items required by the driver or front passenger.

To open the center console storage pull up the lever.

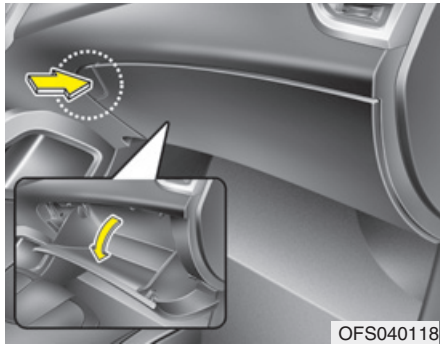
OFS040118

Glove box

To open the glove box, push the button and the glove box will automatically open. Close the glove box after use.

⚠ WARNING

To reduce the risk of injury in an accident or sudden stop, always keep the glove box door closed while driving.

⚠ CAUTION

Do not keep food in the glove box for a long time.

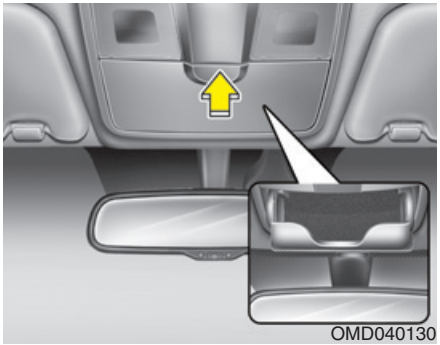

Sunglass holder (if equipped)

To open the sunglass holder, press the cover and the holder will slowly open. Place your sunglasses in the compartment door with the lenses facing out. Push to close.

⚠ WARNING

- **Do not keep objects except sunglasses inside the sunglass holder. Such objects can be thrown from the holder in the event of a sudden stop or an accident, possibly injuring the passengers in the vehicle.**
- **Do not open the sunglass holder while the vehicle is moving. The rear view mirror of the vehicle can be blocked by an open sunglass holder.**
- **Do not put the glasses forcibly into a sunglass holder to prevent breakage or deformation of glasses. It may cause personal injury if you try to open it forcibly when the glasses are jammed in holder.**

INTERIOR FEATURES

Clock

⚠ WARNING

Do not adjust the clock while driving. You may lose your steering control and cause severe personal injury or accidents.

Type A

This allows you to set the time format and the clock.

- Time format: Change the time format between the “12h” and “24h”.
- Setting the clock
  - Press ▲ or ▼ on the left side of the clock to set the hour.
  - Press ▲ or ▼ on the right side of the clock to set the minute.
  - If you set the [Time format] to [12h], set the [am] or [pm].

Type B

This allows you to set the time format and the summer time.

- Time format: Change the time format between the “12h” and “24h”.
- Summer time: Set the summer time between the “On” and “Off”. The unit sets the clock automatically by detecting the summer time whether it is the summer time season or not. Even though the summer time is set to "On", the unit sets the clock to normal time (not +1 hour) when it's not summer time season.

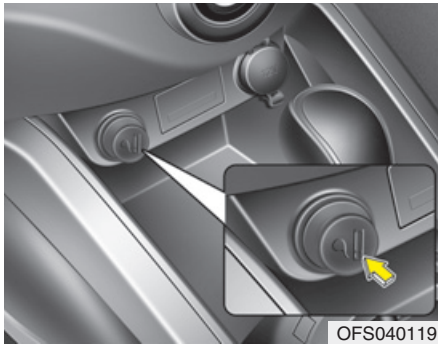
OFS040119

Cigarette lighter

For the cigarette lighter to work, the ignition switch must be in the ACC or ON position.

To use the cigarette lighter, push it all the way into its socket. When the element is heated, the lighter will pop out to the “ready” position.

⚠ WARNING

- **Do not hold the lighter in after it is already heated because it will overheat.**
- **If the lighter does not pop out within 30 seconds, remove it to prevent overheating.**
- **Do not insert foreign objects into the socket of the cigarette lighter. It may damage the cigarette lighter.**

⚠ CAUTION

We recommend that you use parts for replacement from an authorized HYUNDAI dealer.

⚠ CAUTION

The use of plug-in accessories (shavers, hand-held vacuums, and coffee pots, etc.) may damage the socket or cause electrical failure.

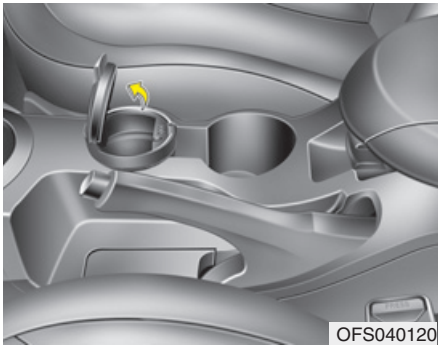

Ashtray (if equipped)

To use the ashtray, open the cover.
To clean or empty the ashtray, pull it out.

⚠ WARNING - Ashtray use

- **Do not use the vehicle's ashtrays as waste receptacles.**
- **Putting lit cigarettes or matches in an ashtray with other combustible materials may cause a fire.**

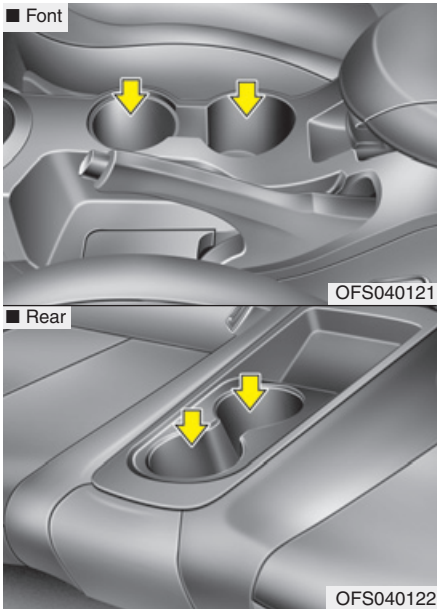

Cup holder

Cups or small beverage cans may be placed in the cup holders.

⚠ WARNING - Hot liquids

- **Do not place uncovered cups with hot liquid in the cup holder while the vehicle is in motion. If the hot liquid spills, you may burn yourself. Such a burn to the driver could lead to loss of control of the vehicle.**
- **To reduce the risk of personal injury in the event of sudden stop or collision, do not place uncovered or unsecured bottles, glasses, cans, etc., in the cup holder while the vehicle is in motion.**

⚠ WARNING

Keep cans or bottles out of direct sun light and do not put them in a vehicle that is heated up. It may explode.

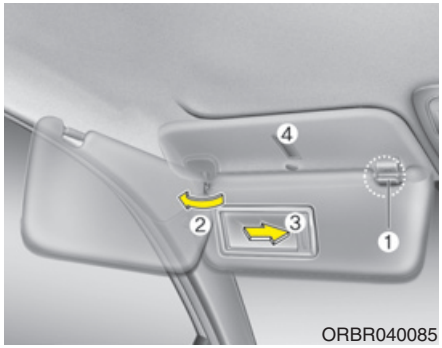

Sunvisor

Use the sunvisor to shield direct light through the front or side windows.

To use a sunvisor, pull it downward.

To use a sunvisor for a side window, pull it downward, unsnap it from the bracket (1) and swing it to the side (2).

To use the vanity mirror, pull down the visor and open the mirror cover (3).

The ticket holder (4) is provided to hold tickets such as tollgate ticket.

✻ NOTICE

Close the vanity mirror cover securely and return the sunvisor to its original position after use.

⚠ CAUTION - Vanity mirror lamp (if equipped)

Always have the switch in the off position when the vanity mirror lamp is not in use. If the sunvisor is closed without the lamp off, it may discharge the battery or damage the sunvisor.

⚠ WARNING

For your safety, do not obstruct your vision when using the sunvisor.

❊ To learn how to use the vanity mirror lamp, refer to "Interior light" in this section.

OFS040123

Power outlet (if equipped)

The power outlet is designed to provide power for mobile telephones or other devices designed to operate with vehicle electrical systems. The devices should draw less than 10 amps with the engine running.

⚠ CAUTION

- ***Use the power outlet only when the engine is running and remove the accessory plug after use. Using the accessory plug for prolonged periods of time with the engine off could cause the battery to discharge.***
- ***Only use 12V electric accessories which are less than 10A in electric capacity.***
- ***Adjust the air-conditioner or heater to the lowest operating level when using the power outlet.***
- ***Close the cover when not in use.***
- ***Some electronic devices can cause electronic interference when plugged into a vehicle's power outlet. These devices may cause excessive audio static and malfunctions in other electronic systems or devices used in your vehicle.***

OFS040129

Aux, USB and iPod port (if equipped)

If your vehicle has an Aux (Auxiliary) and/or USB (Universal Serial Bus) port or iPod port, you can use an aux port to connect audio devices and an USB port to plug in an USB and also an iPod port to plug in an iPod.

✻ NOTICE

When using a portable audio device connected to the power outlet, noise may occur during playback. If this happens, use the power source of the portable audio device.

❊ iPod is a trademark of Apple Inc.

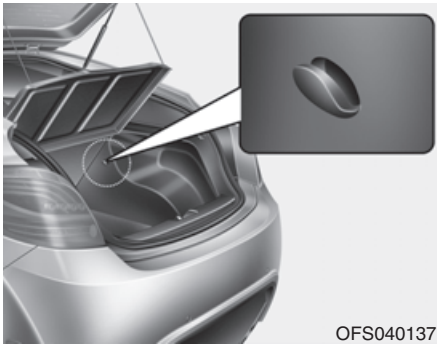

Shopping bag holder (if equipped)

⚠ CAUTION

- ***Do not hang a bag weighing more than 3 kg (7 lbs.). It may cause damage to the shopping bag holder.***
- ***Do not hang the frail objects when you drive rough road, the objects may be damaged.***

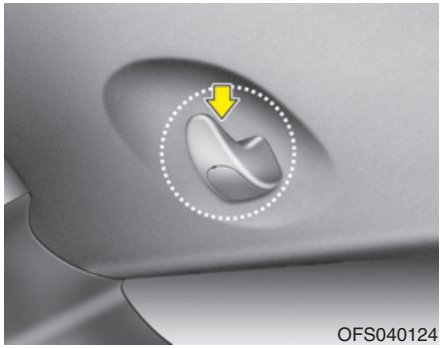

Clothes hanger (if equipped)

⚠ CAUTION

Do not hang heavy clothes, since those may damage the hook.

⚠ WARNING

Do not hang other objects except clothes. In an accident it may cause vehicle damage or personal injury.

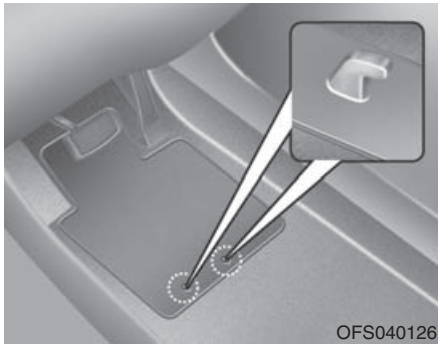

Floor mat anchor(s) (if equipped)

When using a floor mat on the front floor carpet, make sure it attaches to the floor mat anchor(s) in your vehicle. This keeps the floor mat from sliding forward.

⚠ WARNING

The following must be observed when installing ANY floor mat to the vehicle.

- **Ensure that the floor mats are securely attached to the vehicle's floor mat anchor(s) before driving the vehicle.**
- **Do not use ANY floor mat that cannot be firmly attached to the vehicle's floor mat anchors.**
- **Do not stack floor mats on top of one another (e.g. all-weather rubber mat on top of a carpeted floor mat). Only a single floor mat should be installed in each position.**

  IMPORTANT - Your vehicle was manufactured with driver's side floor mat anchors that are designed to securely hold the floor mat in place. To avoid any interference with pedal operation, HYUNDAI recommends that the HYUNDAI floor mat designed for use in your vehicle be installed.

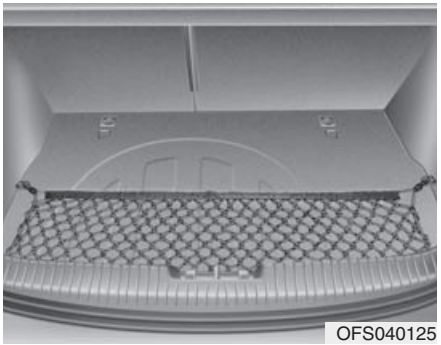
OFS040125

Luggage net holder (if equipped)

To keep items from shifting in the cargo area, you can use the 4 holders located in the cargo area (under the floor panel) to attach the luggage net.

If your vehicle is equipped with a luggage board, set the board to the lower position before installing the luggage net.

If necessary, we recommend that you contact an authorized HYUNDAI dealer to obtain a luggage net.

⚠ CAUTION

To prevent damage to the goods or the vehicle, care should be taken when carrying fragile or bulky objects in the luggage compartment.

⚠ WARNING

Avoid eye injury. DO NOT overstretch the luggage net, ALWAYS keep your face and body out of the luggage net's recoil path. DO NOT use when the strap has visible signs of wear or damage.

AUDIO SYSTEM

✻ NOTICE

- **If you install an after market HID head lamp, your vehicle's audio and electronic device may malfunction.**
- **Prevent chemicals such as perfume, cosmetic oil, sun cream, hand cleaner, and air freshener from contacting the interior parts because they may cause damage or discoloration.**

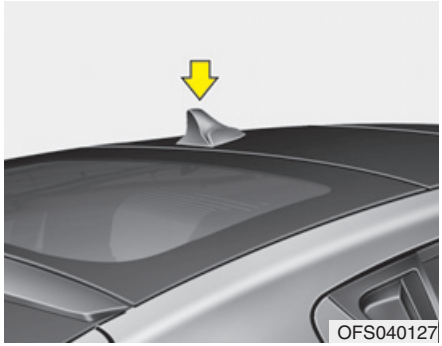

Antenna

Glass antenna

Your vehicle uses a glass antenna to receive both AM and FM signals.

Shark fin antenna (if equipped)

The shark fin antenna will receive the transmit data.

⚠ CAUTION

- ***Do not clean the inside of the rear window glass or quarter glass with a cleaner or use a scraper to remove any foreign deposits as this may cause damage to the antenna elements.***
- ***Avoid adding metallic coating such as Ni, Cd, and so on. These can interfere with AM/FM reception.***
- ***To prevent damage to the rear glass antenna, never use sharp instruments or window cleaner containing abrasives to clean the window. Clean the inside surface of the rear glass window with a piece of soft cloth.***
- ***When putting a sticker on the inside surface of the rear window, be careful not to damage to the rear glass antenna.***
- ***Do not put sharp instruments nearby the rear glass antenna.***
- ***Tinted rear window may affect the proper functioning of the antenna.***

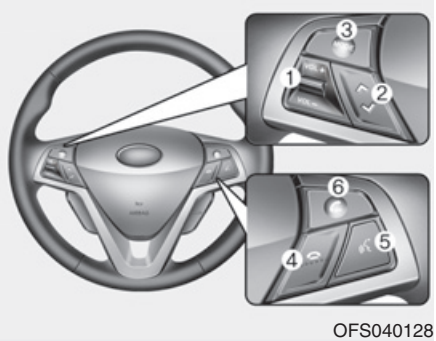

OFS040128

Audio remote control (if equipped)

The steering wheel audio remote control switch is installed to promote safe driving.

⚠ CAUTION

Do not operate the audio remote control switches simultaneously.

VOL (VOL+/VOL-) (1)

Increases or decreases the volume level.

SEEK (⌃ / ⌄) (2)

- Press this button.
  - Automatic tuning: RADIO
  - Track up/down: USB CD iPod
- Press and hold this button.
  - Manual tuning: RADIO
  - Search (FF/REW): USB CD iPod BT

MODE (3)

Selects a source.

FM ➞ AM ➞ CD ➞ USB (or iPod) ➞ BT ➞ AUX ➞ FM...

(4)

Press this button briefly to reject a call during a call.

(5)

- Press this button to start the voice recognition mode.
- Press the button one more to cancel voice commands while the voice recognition is active.

(6)

Enables Bluetooth Hands-Free Phone.

- Press this button briefly to take a call when there is an incoming call.
- Press this button briefly to make a call from last calls.
- Press this button lengthy to switch the sound path during a call.
  (Hands free ↔ phone)

FM reception

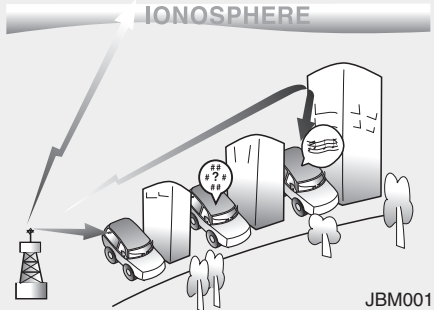

AM reception

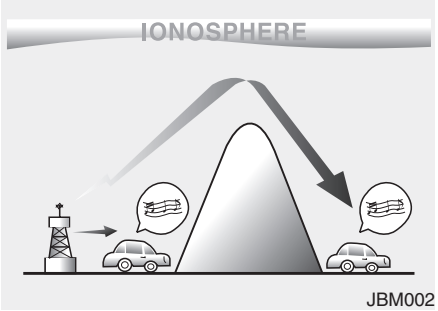

FM radio station

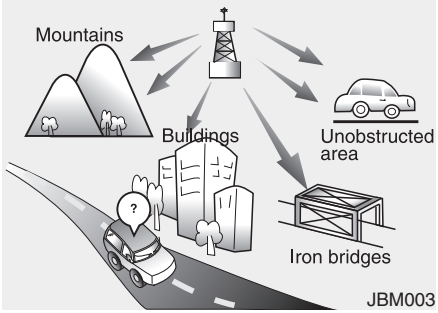

How vehicle audio works

AM and FM radio signals are broadcast from transmitter towers located around your city. They are intercepted by the radio antenna on your vehicle. This signal is then received by the radio and sent to your vehicle speakers.

When a strong radio signal has reached your vehicle, the precise engineering of your audio system ensures the best possible quality reproduction. However, in some cases the signal coming to your vehicle may not be strong and clear. This can be due to factors such as the distance from the radio station, closeness of other strong radio stations or the presence of buildings, bridges or other large obstructions in the area.

AM broadcasts can be received at greater distances than FM broadcasts. This is because AM radio waves are transmitted at low frequencies. These long, low frequency radio waves can follow the curvature of the earth rather than travelling straight out into the atmosphere. In addition, they curve around obstructions so that they can provide better signal coverage.

FM broadcasts are transmitted at high frequencies and do not bend to follow the earth's surface. Because of this, FM broadcasts generally begin to fade at short distances from the station.

Also, FM signals are easily affected by buildings, mountains, or other obstructions. These can result in certain listening conditions which might lead you to believe a problem exists with your radio. The following conditions are normal and do not indicate radio trouble:

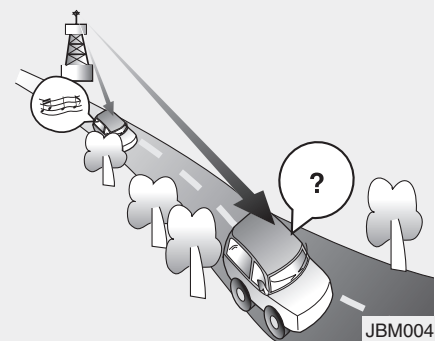

- Fading - As your vehicle moves away from the radio station, the signal will weaken and sound will begin to fade. When this occurs, we suggest that you select another stronger station.
- Flutter/Static - Weak FM signals or large obstructions between the transmitter and your radio can disturb the signal causing static or fluttering noises to occur. Reducing the treble level may lessen this effect until the disturbance clears.

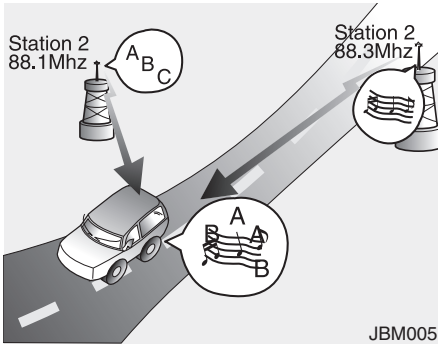

- Station Swapping - As a FM signal weakens, another more powerful signal near the same frequency may begin to play. This is because your radio is designed to lock onto the clearest signal. If this occurs, select another station with a stronger signal.
- Multi-Path Cancellation - Radio signals being received from several directions can cause distortion or fluttering. This can be caused by a direct and reflected signal from the same station, or by signals from two stations with close frequencies. If this occurs, select another station until the condition has passed.

Using a cellular phone or a two-way radio

When a cellular phone is used inside the vehicle, noise may be produced from the audio equipment. This does not mean that something is wrong with the audio equipment. In such a case, use the cellular phone at a place as far as possible from the audio equipment.

⚠ CAUTION

When using a communication system such a cellular phone or a radio set inside the vehicle, a separate external antenna must be fitted. When a cellular phone or a radio set is used with an internal antenna alone, it may interfere with the vehicle's electrical system and adversely affect safe operation of the vehicle.

⚠ WARNING

Do not use a cellular phone while driving. Stop at a safe location to use a cellular phone.

Care of disc

- If the temperature inside the car is too high, open the car windows for ventilation before using your car audio.
- It is illegal to copy and use MP3/WMA files without permission. Use CDs that are created only by lawful means.
- Do not apply volatile agents such as benzene and thinner, normal cleaners and magnetic sprays made for analogue disc onto CDs.
- To prevent the disc surface from getting damaged. Hold and carry CDs by the edges or the edges of the center hole only.
- Clean the disc surface with a piece of soft cloth before playback (wipe it from the center to the outside edge).
- Do not damage the disc surface or attach pieces of sticky tape or paper onto it.
- Make sure on undesirable matter other than CDs are inserted into the CD player (Do not insert more than one CD at a time).
- Keep CDs in their cases after use to protect them from scratches or dirt.
- Depending on the type of CD-R/CD-RW CDs, certain CDs may not operate normally according to manufacturing companies or making and recording methods. In such circumstances, if you still continue to use those CDs, they may cause the malfunction of your car audio system.

✻ NOTICE - Playing an Incompatible Copy Protected Audio CD

Some copy protected CDs, which do not comply with the international audio CD standards (Red Book), may not play on your car audio. Please note that if you try to play copy protected CDs and the CD player does not perform correctly the CDs maybe defective, not the CD player.

Before driving / 5-3
Key positions / 5-5
Engine start/stop button / 5-8
ISG (Idle stop and go) system / 5-13
Manual transaxle / 5-17
Automatic transaxle / 5-21
Brake system / 5-30
Cruise control system / 5-41
Active ECO system / 5-45
Economical operation / 5-46
Special driving conditions / 5-48

Driving your vehicle

5

Winter driving / 5-52
Vehicle weight / 5-56

⚠ WARNING - ENGINE EXHAUST CAN BE DANGEROUS!

Engine exhaust fumes can be extremely dangerous. If, at any time, you smell exhaust fumes inside the vehicle, open the windows immediately.

- **Do not inhale exhaust fumes.**
  Exhaust fumes contain carbon monoxide, a colorless, odorless gas that can cause unconsciousness and death by asphyxiation.
- **Be sure the exhaust system does not leak.**
  The exhaust system should be checked whenever the vehicle is raised to change the oil or for any other purpose. If you hear a change in the sound of the exhaust or if you drive over something that strikes the underneath side of the car, we recommend that the system be checked by an authorized HYUNDAI dealer.
- **Do not run the engine in an enclosed area.**
  Letting the engine idle in your garage, even with the garage door open, is a hazardous practice. Never run the engine in your garage any longer than it takes to start the engine and back the vehicle out.
- **Avoid idling the engine for prolonged periods with people inside the vehicle.**
  If it is necessary to idle the engine for a prolonged period with people inside the vehicle, be sure to do so only in an open area with the air intake set at "Fresh" and fan operating at one of the higher speeds so fresh air is drawn into the interior.

If you must drive with the tailgate open because you are carrying objects that make this necessary:

1. Close all windows.
2. Open side vents.
3. Set the air intake control at "Fresh", the air flow control at "Floor" or "Face" and the fan at one of the higher speeds.

To assure proper operation of the ventilation system, be sure the ventilation air intakes located just in front of the windshield are kept clear of snow, ice, leaves or other obstructions.

BEFORE DRIVING

Before entering vehicle

- Be sure that all windows, outside mirror(s), and outside lights are clean.
- Check the condition of the tires.
- Check under the vehicle for any sign of leaks.
- Be sure there are no obstacles behind you if you intend to back up.

Necessary inspections

Fluid levels, such as engine oil, engine coolant, brake fluid, and washer fluid should be checked on a regular basis, with the exact interval depending on the fluid. Further details are provided in section 7, “Maintenance”.

⚠ WARNING

Driving while distracted can result in a loss of vehicle control, that may lead to an accident, severe personal injury, and death. The driver’s primary responsibility is in the safe and legal operation of a vehicle, and use of any handheld devices, other equipment, or vehicle systems which take the driver’s eyes, attention and focus away from the safe operation of a vehicle or which are not permissible by law should never be used during operation of the vehicle.

Before starting

- Close and lock all doors.
- Position the seat so that all controls are easily reached.
- Adjust the inside and outside rearview mirrors.
- Be sure that all lights work.
- Check all gauges.
- Check the operation of warning lights when the ignition switch is turned to the ON position.
- Release the parking brake and make sure the brake warning light goes out.

For safe operation, be sure you are familiar with your vehicle and its equipment.

⚠ WARNING

All passengers must be properly belted whenever the vehicle is moving. Refer to “Seat belts” in section 3 for more information on their proper use.

⚠ WARNING

Always check the surrounding areas near your vehicle for people, especially children, before putting a car into D (Drive) or R (Reverse).

⚠ WARNING - Driving under the influence of alcohol or drugs

Drinking and driving is dangerous. Drunk driving is the number one contributor to the highway death toll each year. Even a small amount of alcohol will affect your reflexes, perceptions and judgment. Driving while under the influence of drugs is as dangerous or more dangerous than driving drunk.

You are much more likely to have a serious accident if you drink or take drugs and drive.

If you are drinking or taking drugs, don't drive. Do not ride with a driver who has been drinking or taking drugs. Choose a designated driver or call a cab.

⚠ WARNING

- **When you intend to park or stop the vehicle with the engine on, be careful not to depress the accelerator pedal for a long period of time. It may overheat the engine or exhaust system and cause fire.**
- **When you make a sudden stop or turn the steering wheel rapidly, loose objects may drop on the floor and it could interfere with the operation of the foot pedals, possibly causing an accident. Keep all things in the vehicle safely stored.**
- **If you do not focus on driving, it may cause an accident. Be careful when operating what may disturb driving such as audio or heater. It is the responsibility of the driver to always drive safely.**

KEY POSITIONS

OYF059016

Ignition switch position

LOCK

The steering wheel locks to protect against theft. The ignition key can be removed only in the LOCK position. When turning the ignition switch to the LOCK position, push the key inward at the ACC position and turn the key toward the LOCK position.

ACC (Accessory)

The steering wheel is unlocked and electrical accessories are operative.

✻ NOTICE

If difficulty is experienced turning the ignition switch to the ACC position, turn the key while turning the steering wheel right and left to release the tension.

ON

The warning lights can be checked before the engine is started. This is the normal running position after the engine is started.

Do not leave the ignition switch ON if the engine is not running to prevent battery discharge.

START

Turn the ignition switch to the START position to start the engine. The engine will crank until you release the key; then it returns to the ON position. The brake warning light can be checked in this position.

⚠ WARNING - Ignition switch

- **Never turn the ignition switch to LOCK or ACC while the vehicle is moving. This would result in loss of directional control and braking function, which could cause an accident.**
- **The anti-theft steering column lock is not a substitute for the parking brake. Before leaving the driver's seat, always make sure the shift lever is engaged in 1st gear for the manual transaxle or P (Park) for the automatic transaxle, set the parking brake fully and shut the engine off. Unexpected and sudden vehicle movement may occur if these precautions are not taken.**

(Continued)

(Continued)

- Never reach for the ignition switch, or any other controls through the steering wheel while the vehicle is in motion. The presence of your hand or arm in this area could cause a loss of vehicle control, an accident and serious bodily injury or death.
- Do not place any movable objects around the driver's seat as they may move while driving, interfere with the driver and lead to an accident.

Starting the engine

⚠ WARNING

- Always wear appropriate shoes when operating your vehicle. Unsuitable shoes (high heels, ski boots,etc.) may interfere with your ability to use the brake and accelerator pedal, and the clutch (if equipped).
- Do not start the vehicle with the accelerator pedal depressed. The vehicle can move and lead to an accident.
- Wait until the engine rpm is normal. The vehicle may suddenly move if the brake padel is released when the rpm is high.

✻ NOTICE - Kick down mechanism (if equipped)

If your vehicle is equipped with a kick down mechanism in the accelerator pedal, it prevents you from driving at full throttle unintentionally by making the driver require increased effort to depress the accelerator pedal. However, if you depress the pedal more than approximately 80%, the vehicle can be at full throttle and the accelerator pedal will be easier to depress. This is not a malfunction but a normal condition.

1. Make sure the parking brake is applied.
2. **Manual Transaxle** - Depress the clutch pedal fully and leave the shift lever at Neutral. Keep the clutch pedal and brake pedal depressed while turning the ignition switch to the start position.

   Automatic Transaxle/DCT* - Place the transaxle shift lever in P (Park). Depress the brake pedal fully.

   You can also start the engine when the shift lever is in the N (Neutral) position.
3. Turn the ignition switch to START and hold it there until the engine starts (a maximum of 10 seconds), then release the key.

It should be started ***without depressing the accelerator.***

4. Do not wait for the engine to warm up while the vehicle remains stationary.

   Start driving at moderate engine speeds. (Steep accelerating and decelerating should be avoided.)

❊ DCT: Double clutch Transmission

⚠ CAUTION

If the engine stalls while you are in motion, do not attempt to move the shift lever to the P (Park) position. If traffic and road conditions permit, you may put the shift lever in the N (Neutral) position while the vehicle is still moving and turn the ignition switch to the START position in an attempt to restart the engine.

⚠ CAUTION

- ***Do not engage the starter for more than 10 seconds. If the engine stalls or fails to start, wait 5 to 10 seconds before re-engaging the starter. Improper use of the starter may damage it.***
- ***Do not turn the ignition switch to the START position with the engine running. It may damage the starter.***

ENGINE START/STOP BUTTON (IF EQUIPPED)

OFS050005

Illuminated ENGINE START/STOP button

Whenever the front door is opened, the ENGINE START/STOP button will illuminate for your convenience. The light will go off after about 30 seconds when the door is closed. It will also go off immediately when the theft-alarm system is armed.

ENGINE START/STOP button position

OFF

• With manual transaxle

To turn off the engine (START/RUN position) or vehicle power (ON position), stop the vehicle then press the ENGINE START/STOP button.

• With automatic transaxle/DCT

To turn off the engine (START/RUN position) or vehicle power (ON position), press the ENGINE START/STOP button with the shift lever in the P (Park) position. When you press the ENGINE START/STOP button without the shift lever in the P (Park) position, the ENGINE START/STOP button will not change to the OFF position but to the ACC position.

Also, the steering wheel locks when the ENGINE START/STOP button is in the OFF position to protect you against theft. It locks when the door is opened.

If the steering wheel is not locked properly when you open the driver's door, the warning chime will sound. Try locking the steering wheel again. If the problem is not solved, we recommend that the system be checked by an authorized HYUNDAI dealer.

In addition, if the ENGINE START/STOP button is in the OFF position after the driver's door is opened, the steering wheel will not lock and the warning chime will sound. In such a situation, close the door. Then the steering wheel will lock and the warning chime will stop.

✻ NOTICE

If the steering wheel doesn't unlock properly, the ENGINE START/STOP button will not work. Press the ENGINE START/STOP button while turning the steering wheel right and left to release the tension.

* DCT : Double clutch transmission

⚠ **CAUTION**

You are able to turn off the engine (START/RUN) or vehicle power (ON), only when the vehicle is not in motion. In an emergency situation while the vehicle is in motion, you are able to turn the engine off and to the ACC position by pressing the ENGINE START/STOP button for more than 2 seconds or 3 times successively within 3 seconds. If the vehicle is still moving, you can restart the engine without depressing the brake pedal by pressing the ENGINE START/STOP button with the shift lever in the N (Neutral) position.

ACC(Accessory)

• With manual transaxle

Press the ENGINE START/STOP button when the button is in the OFF position without depressing the clutch pedal.

• With automatic transaxle/DCT

Press the ENGINE START/STOP button while it is in the OFF position without depressing the brake pedal.

The steering wheel unlocks and electrical accessories are operational.

If the ENGINE START/STOP button is in the ACC position for more than 1 hour, the button turns off automatically to prevent battery discharge.

ON

• With manual transaxle

Press the ENGINE START/STOP button when the button is in the ACC position without depressing the clutch pedal.

• With automatic transaxle/DCT

Press the ENGINE START/STOP button while it is in the ACC position without depressing the brake pedal.

The warning lights can be checked before the engine is started. Do not leave the ENGINE START/STOP button in the ON position for a long time. The battery may discharge, because the engine is not running.

START/RUN

• With manual transaxle

To start the engine, depress the clutch pedal and brake pedal, then press the ENGINE START/STOP with the shift lever in the Neutral position.

• With automatic transaxle/DCT

To start the engine, depress the brake pedal and press the ENGINE START/ STOP button with the shift lever in the P (Park) or the N (Neutral) position. For your safety, start the engine with the shift lever in the P (Park) position.

✻ NOTICE

If you press the ENGINE START/STOP button without depressing the clutch pedal for manual transaxle vehicles or without depressing the brake pedal for automatic transaxle vehicles, the engine will not start and the ENGINE START/ STOP button changes as follow:
OFF ➔ACC ➔ ON ➔ OFF or ACC

✻ NOTICE

If you leave the ENGINE START/ STOP button in the ACC or ON position for a long time, the battery will discharge.

⚠ WARNING

- **Never press the ENGINE START/ STOP button while the vehicle is in motion. This would result in loss of directional control and braking function, which could cause an accident.**
- **The anti-theft steering column lock is not a substitute for the parking brake. Before leaving the driver's seat, always make sure the shift lever is engaged in P (Park), set the parking brake fully and shut the engine off. Unexpected and sudden vehicle movement may occur if these precautions are not taken.**

(Continued)

(Continued)

- **Never reach for the ENGINE START/STOP button or any other controls through the steering wheel while the vehicle is in motion. The presence of your hand or arm in the area could cause loss of vehicle control, an accident and serious bodily injury or death.**
- **Do not place any movable objects around the driver's seat as they may move while driving, interfere with the driver and lead to an accident.**
- **While driving, if you push the ENGINE START/ STOP button, the warning buzzer sounds for 1 second.**

Starting the engine

⚠ WARNING

- **Always wear appropriate shoes when operating your vehicle. Unsuitable shoes (high heels, ski boots,etc.) may interfere with your ability to use the brake and accelerator pedal, and the clutch (if equipped).**
- **Do not start the vehicle with the accelerator pedal depressed. The vehicle can move and lead to an accident.**
- **Wait until the engine rpm is normal. The vehicle may suddenly move if the brake padel is released when the rpm is high.**

✻ NOTICE - Kick down mechanism (if equipped)

If your vehicle is equipped with a kick down mechanism in the accelerator pedal, it prevents you from driving at full throttle unintentionally by making the driver require increased effort to depress the accelerator pedal. However, if you depress the pedal more than approximately 80%, the vehicle can be at full throttle and the accelerator pedal will be easier to depress. This is not a malfunction but a normal condition.

1. Carry the smart key or leave it inside the vehicle.
2. Make sure the parking brake is firmly applied
3. **Manual Transaxle** - Depress the clutch pedal fully and shift the transaxle into Neutral. Keep the clutch pedal and brake pedal depressed while starting the engine.

   Automatic Transaxle/DCT* - Place the transaxle shift lever in P (Park). Depress the brake pedal fully.

   You can also start the engine when the shift lever is in the N (Neutral) position.
4. Press the ENGINE START/STOP button.

It should be started without depressing the accelerator.

5. Do not wait for the engine to warm up while the vehicle remains stationary.

   Start driving at moderate engine speeds. (Steep accelerating and decelerating should be avoided.)

✻ DCT: Double clutch Transmission

⚠ CAUTION

If the engine stalls while the vehicle is in motion, do not attempt to move the shift lever to the P (Park) position. If the traffic and road conditions permit, you may put the shift lever in the N (Neutral) position while the vehicle is still moving and press the ENGINE START/STOP button in an attempt to restart the engine.

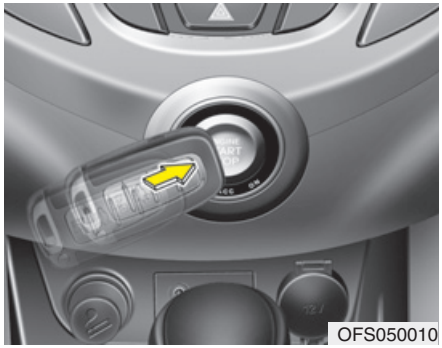

✻ NOTICE

- **If the battery is weak or the smart key does not work correctly, you can start the engine by pressing the ENGINE START/STOP button directly with the smart key.**
- **When the stop lamp fuse is blown, you can not start the engine normally. Replace the fuse with a new one. If it is not possible, you can start the engine by pressing the ENGINE START/STOP button for 10 seconds while it is in the ACC position. The engine can start without depressing the brake pedal. But for your safety always depress the brake pedal before starting the engine.**

⚠ CAUTION

- ***Do not press the ENGINE START/STOP button for more than 10 seconds except when the stop lamp fuse is blown.***
- ***Do not turn the ignition switch to the START position with the engine running. It may damage the starter.***

ISG (IDLE STOP AND GO) SYSTEM (IF EQUIPPED)

■ Type A

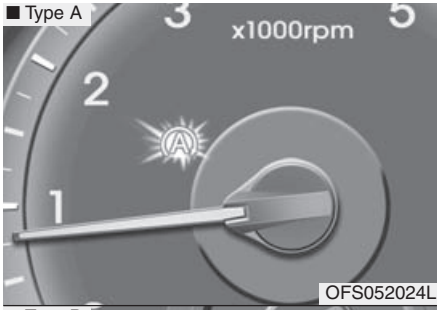

OFS052024L

■ Type B

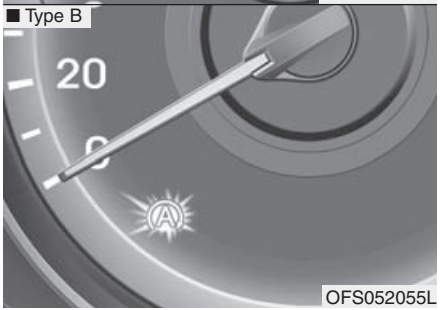

OFS052055L

Your vehicle may be equipped with the ISG system, which reduces fuel consumption by automatically shutting down the engine, when the vehicle is at a standstill. (For example : red light, stop sign and traffic jam)
The engine starts automatically as soon as the starting conditions are met.

The ISG system is ON whenever the engine is running.

✻ NOTICE

When the engine automatically starts by the ISG system, some warning lights (ABS, ESC, ESC OFF, EPS or Parking brake warning light) may turn on for a few seconds.
This happens because of low battery voltage. It does not mean the system is malfunctioning.

OFS052029L

Auto stop

To stop the engine in idle stop mode

1. Decrease the vehicle speed to less than 5 km/h.
2. Shift into N (Neutral) position.
3. Release the clutch pedal.

The engine will stop and the green AUTO STOP indicator (Ⓐ) on the instrument cluster will illuminate. If your vehicle is equipped with a supervision cluster, the notice will illuminate on the LCD display.

OFS052033L

✻ NOTICE

- **You must reach a speed of at least 10 km/h since last idle stop.**
- **If you unfasten the seat belt or open the driver's door (engine hood) in auto stop mode, the light on the ISG OFF button will illuminate and ISG system is deactivated. If your vehicle is equipped with a supervision cluster, the notice will illuminate on the LCD display.**
  Turn the ignition switch to the START position to start the engine manually.

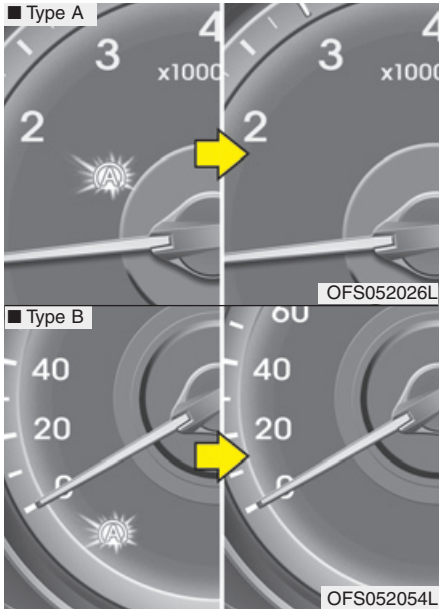

Auto start

To restart the engine from idle stop mode

- Press the clutch pedal when the shift lever is in the N (Neutral) position.

The engine will start and the green AUTO STOP indicator (Ⓐ) on the instrument cluster will go out.

OFS052029L

The engine will also restart automatically without the driver's any actions if the following occurs:

- The fan speed of manual climate control system is set above the 3rd position when the air conditioning is on.
- The fan speed of automatic climate control system is set above the 6th position when the air conditioning is on.
- When a certain amount of time has passed with the climate control system on.
- When the defroster is on.
- The brake vaccum pressure is low.
- The battery charging status is low.
- The vehicle speed exceeds 5 km/h.

The green AUTO STOP indicator (Ⓐ) on the instrument cluster will blink for 5 seconds and the notice will illuminate on the LCD display (if equipped).

Condition of ISG system operation

The ISG system will operate under the following condition:

- The driver's seat belt is fastened.
- The driver's door and hood are closed.
- The brake vaccum pressure is adequate.
- The battery is sufficiently charged.
- The outside temperature is between -2°C to 35°C.
- The engine coolant temperature is not too low.

OFS052031L

✻ NOTICE

- **If the ISG system does not meet that operation condition, the ISG system is deactivated. The light on the ISG OFF button will illuminate and the notice will illuminate on the LCD display (if equipped).**
- **If the light or notice comes on continuously, please check the operation condition.**

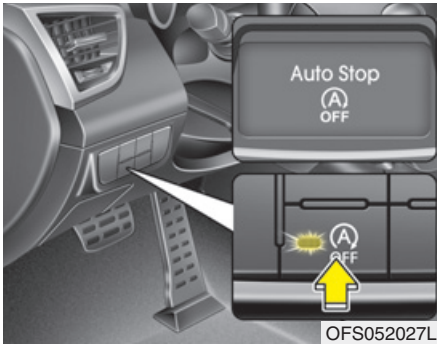

OFS052027L

ISG system deactivation

- If you want to deactivate the ISG system, press the ISG OFF button. The light on the ISG OFF button will illuminate and the notice will illuminate on the LCD display (if equipped).
- If you press the ISG OFF button again, the system will be activated and the light on the ISG OFF button will turn off.

OFS052034L

ISG system malfunction

The system may not operate when:

- The ISG related sensors or system error occurs.

The yellow AUTO STOP indicator (Ⓐ) on the instrument cluster will stay on after blinking for 5 seconds and the light on the ISG OFF button will illuminate. If your vehicle is equipped with a supervision cluster, the notice will illuminate on the LCD display.

✻ NOTICE

- **If the ISG OFF button light is not turned off by pressing the ISG OFF button again or if the ISG system continuously does not work correctly, we recommend that you contact an authorized HYUNDAI dealer.**
- **When the ISG OFF button light comes on, it may stop illuminating after driving your vehicle at approximately 80 km/h for a maximum of two hours and setting the fan speed control knob below the 2nd position. If the ISG OFF button light continues to be illuminated in spite of the procedure, we recommend that you contact an authorized HYUNDAI dealer.**

⚠ WARNING

When the engine is in Idle Stop mode, it's possible to restart the engine without the driver taking any action.

Before leaving the car or doing anything in the engine room area, stop the engine by turning the ignition switch to the LOCK(OFF) position or removing the ignition key.

MANUAL TRANSAXLE (IF EQUIPPED)

■ Type A

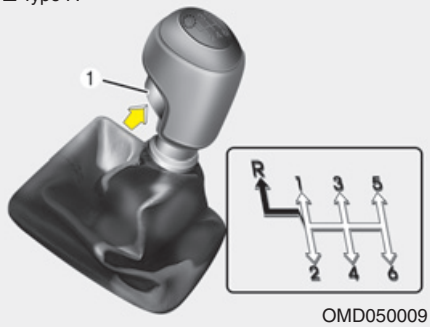

OMD050009

⇨ The shift lever can be moved without pressing the button (1).

➡ The button (1) must be pressed while moving the shift lever.

■ Type B

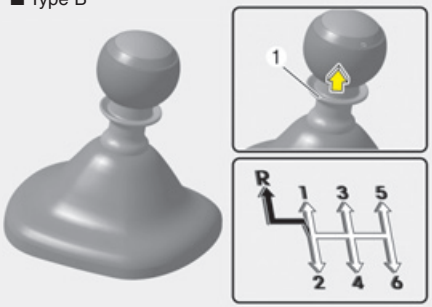

OFS053067

⇨ The shift lever can be moved without pulling up the ring (1).

➡ The ring (1) must be pulled up while moving the shift lever.

* The actual shift lever in the vehicle may differ from the illustration.

Manual transaxle operation

The manual transaxle has 6 forward gears.

This shift pattern is imprinted on the shift knob. The transaxle is fully synchronized in all forward gears so shifting to either a higher or a lower gear is easily accomplished.

Depress the clutch pedal down fully while shifting, then release it slowly.

If your vehicle is equipped with an ignition lock system, the engine will not start when starting the engine without depressing the clutch pedal.

The shift lever must return to the Neutral position before shifting into R (Reverse).

Push the button located immediatley below the shift knob and pull the gearshift lever to the left sufficiently, shift into the reverse R (Reverse) gear position to the end.

Make sure the vehicle is completely stopped before shifting into R (Reverse).

Never operate the engine with the tachometer (rpm) in the red zone.

⚠ **CAUTION**

- ***When downshifting from 5th (Fifth) gear to 4th (Fourth) gear, caution should be taken not to inadvertently move the shift lever sideways in such a manner that second gear is engaged. Such a drastic downshift may cause the engine speed to increase to the point that the tachometer will enter the red-zone. Such over-revving of the engine may possibly cause engine and transaxle damage.***
- ***Do not downshift more than 2 gears or downshift the gear when the engine is running at high speed (5,000 RPM or higher). Such a downshifting may damage the engine, clutch and the transaxle.***
- ***When shifting between 5th and 6th gear, you should always push the gear level all the way to the right. You could otherwise shift unintentionally into 3rd or 4th gear and damage the transaxle.***

- During cold weather, shifting may be difficult until the transaxle lubricant has warmed up. This is normal and not harmful to the transaxle.
- If you've come to a complete stop and it's hard to shift into 1st (First) or R (Reverse), leave the shift lever at Neutral position and release the clutch. Depress the clutch pedal back down, and then shift into 1st (First) or R (Reverse) gear position.

⚠ **CAUTION**

- ***To avoid premature clutch wear and damage, do not drive with your foot resting on the clutch pedal. Also, don't use the clutch to hold the vehicle stopped on an uphill grade, while waiting for a traffic light, etc.***
- ***Do not use the shift lever as a handrest during driving, as this can result in premature wear of the transaxle shift forks.***
- ***To prevent possible damage to the clutch system, do not start with the 2nd (second) gear engaged except when you start on a slippery road.***

⚠ WARNING

- **Before leaving the driver's seat, always set the parking brake fully and shut the engine off. Then make sure the transaxle is shifted into 1st (First) gear when the vehicle is parked on a level or uphill grade, and shifted into R (Reverse) on a downhill grade. Unexpected and sudden vehicle movement can occur if these precautions are not followed in the order identified.**
- **If your vehicle has a manual transaxle not equipped with a ignition lock switch, it may move and cause a serious accident when starting the engine without depressing the clutch pedal while the parking brake is released and the shift lever not in the Neutral position.**
- **Do not use the engine brake (shifting from a high gear to lower gear) rapidly on slippery roads. The vehicle may slip causing an accident.**

Using the clutch

The clutch should be pressed all the way to the floor before shifting, then released slowly. The clutch pedal should always be fully released while driving. Do not rest your foot on the clutch pedal while driving. This can cause unnecessary wear. Do not partially engage the clutch to hold the car on an incline. This causes unnecessary wear. Use the foot brake or parking brake to hold the car on an incline. Do not operate the clutch pedal rapidly and repeatedly.

Downshifting

When you must slow down in heavy traffic or while driving up steep hills, downshift before the engine starts to labor. Downshifting reduces the chance of stalling and gives better acceleration when you need to increase your speed again. When the vehicle is traveling down steep hills, downshifting helps maintain safe speed and prolongs brake life.

Good driving practices

- Never take the vehicle out of gear and coast down a hill. This is extremely hazardous. Always leave the vehicle in gear.
- Don't "ride" the brakes. This can cause them to overheat and malfunction. Instead, when you are driving down a long hill, shift to a lower gear. When you do this, engine braking will help slow down the vehicle.
- Slow down before shifting to a lower gear. This will help avoid over-revving the engine, which can cause damage.
- Slow down when you encounter cross winds. This gives you much better control of your vehicle.
- Be sure the vehicle is completely stopped before you attempt to shift into R (Reverse). The transaxle can be damaged if you do not. To shift into R (Reverse), depress the clutch, move the shift lever to Neutral, then shift to the R (Reverse) position.
- Exercise extreme caution when driving on a slippery surface. Be especially careful when braking, accelerating or shifting gears. On a slippery surface, an abrupt change in vehicle speed can cause the drive wheels to lose traction and the vehicle to go out of control.

⚠ WARNING

- **Always buckle-up! In a collision, an unbelted occupant is significantly more likely to be seriously injured or killed than a properly belted occupant.**
- **Avoid high speeds when cornering or turning.**
- **Do not make quick steering wheel movements, such as sharp lane changes or fast, sharp turns.**
- **The risk of rollover is greatly increased if you lose control of your vehicle at highway speeds.**
- **Loss of control often occurs if two or more wheels drop off the roadway and the driver oversteers to reenter the roadway.**
- **In the event your vehicle leaves the roadway, do not steer sharply. Instead, slow down before pulling back into the travel lanes.**
- **Never exceed posted speed limits.**

AUTOMATIC TRANSAXLE OR DCT (IF EQUIPPED)

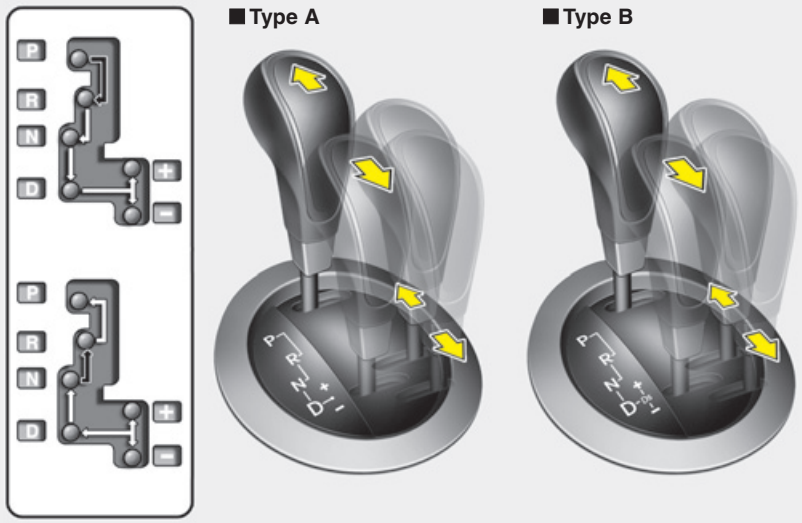

Depress the brake pedal when shifting, if your vehicle is equipped shift lock system.

The shift lever can be moved freely.

❊ DCT: Double clutch Transmission

OFS052015

Automatic transaxle/DCT operation

The automatic transaxle/DCT has 6 forward speeds and one reverse speed. The individual speeds are selected automatically, depending on the position of the shift lever.

✻ NOTICE

The first few shifts on a new vehicle, if the battery has been disconnected, may be somewhat abrupt. This is a normal condition, and the shifting sequence will adjust after shifts are cycled a few times by the TCM (Transaxle Control Module) or PCM (Powertrain Control Module).

✻ NOTICE

- The double clutch transmission gives the driving feel of a Manual Transmission, yet provides the ease of a fully Automatic Transmission. Unlike a traditional Automatic Transmission, the gear shifting can be felt (and heard) on the double clutch transmission
  - Think of it as an automatically shifting Manual Transmission.
  - Shift into Drive range and you get great shifting feedback and sound, but no shifting hassle.
- Dry-type clutch transfers driving torque and also delivers direct driving feel which can be felt different from smooth Automatic Transmission with slip of torque converter. This might be easily felt especially at launch & low vehicle speed.
- Double clutch transmission adopts dry-type double clutch, which is different from torque converter of Automatic Transmission, and shows better acceleration performance during driving. But, initial launch might be little bit slower than Automatic Transmission.

(Continued)

(Continued)

- When rapidly accelerating at low vehicle speed, engine could rev at high rpm depending on vehicle drive condition.
- For smooth launch at uphill, press down the accelerator pedal properly depending on the vehicle drive condition.
- If you release your foot from the accelerator pedal at low vehicle speed, you may feel strong engine brake, which is similar to manual transmission.
- In case if you want to speed down at downhill, you may use sport mode or paddle shift to downshift, and also use foot brake properly depending on driving condition to get enough deceleration.
- When you turn the ignition on and off, you may hear clicking sounds as the transmission solenoids turn on and off, cycling through a self test. This is a normal sound for the Double Clutch Transmission.

For smooth operation, depress the brake pedal when shifting from N (Neutral) to a forward or reverse gear.

⚠ WARNING

- **Always check the surrounding areas near your vehicle for people, especially children, before shifting a car into D (Drive) or R (Reverse).**
- **Before leaving the driver's seat, always make sure the shift lever is in the P (Park) position; then set the parking brake fully and shut the engine off. Unexpected and sudden vehicle movement can occur if these precautions are not followed in the order identified.**
- **Do not use the engine brake (shifting from a high gear to lower gear) rapidly on slippery roads. The vehicle may slip causing an accident.**

⚠ CAUTION - DCT

- *If the vehicle is held by applying accelerator pedal at the hill, the transmission and clutch will be damaged. To hold at the hill, use the parking brake or foot brake.*
- *An overload of the clutch is indicated by a longitudinal judder and a blinking display. To exclude a clutch-damage, the clutch is opened and the torque flow interrupted. If the clutch is opened, apply the foot brake and wait some minutes before driving again.*
- *Ignoring the warnings can lead to severe injuries and damage on the car.*
- *If the LCD warning is active, the foot brake has to be applied.*
- *When the problem of gear system occurs, the transaxle indicator will blink. For your safety, we recommend that you contact an authorized HYUNDAI dealer and have the system checked.*

(Continued)

(Continued)

- *When the clutch is overheated, the safe protection mode operates. According to the safe protection mode, the transaxle indicator blinks with buzzer sound. The buzzer beeps 3 times.*

  In this time, the LCD warning about safe protection mode also displays. In this condition, the driving may not be smoothly. If you ignore this warning, the driving condition is getting worse and the system may have problem. To return the normal driving condition, apply the foot brake and stop the vehicle for few minutes before driving off.
- *While shifting the gear automatically, you may feel a corresponding shifting of gear. However, it is not malfunction.*

⚠ CAUTION

- *To avoid damage to your transaxle, do not accelerate the engine in R (Reverse) or any forward gear position with the brakes on.*
- *When stopped on an upgrade, do not hold the vehicle with engine power. Use the service brake or the parking brake.*
- *Do not shift from N (Neutral) or P (Park) into D (Drive), or R (Reverse) when the engine is above idle speed.*

Transaxle ranges

P (Park)

Always come to a complete stop before shifting into P (Park). This position locks the transaxle and prevents the front wheels from rotating.

⚠ WARNING

- **Shifting into P (Park) while the vehicle is in motion will cause the drive wheels to lock which will cause you to lose control of the vehicle.**
- **Do not use the P (Park) position in place of the parking brake. Always make sure the shift lever is latched in the P (Park) position and set the parking brake fully.**
- **Never leave a child unattended in a vehicle.**

⚠ CAUTION

The transaxle may be damaged if you shift into P (Park) while the vehicle is in motion.

R (Reverse)

Use this position to drive the vehicle backward.

⚠ CAUTION

Always come to a complete stop before shifting into or out of R (Reverse); you may damage the transaxle if you shift into R (Reverse) while the vehicle is in motion, except as explained in "Rocking the vehicle" in this section.

N (Neutral)

The wheels and transaxle are not locked. The vehicle will roll freely even on the slightest incline unless the parking brake or service brakes are applied.

⚠ WARNING

Do not drive with the shift lever in N (Neutral).

The engine brake will not work and lead to an accident.

D (Drive)

This is the normal forward driving position. The transaxle will automatically shift through a 6-gear sequence, providing the best fuel economy and power.

For extra power when passing another vehicle or climbing grades, depress the accelerator fully, at which time the transaxle will automatically downshift to the next lower gear.

✻ NOTICE

Always ensure vehicle is stationary, at a complete stop, before selecting D (Drive).

Sports mode

Whether the vehicle is stationary or in motion, sports mode is selected by pushing the shift lever from the D (Drive) position into the manual gate. To return to D (Drive) range operation, push the shift lever back into the main gate.

In sports mode, moving the shift lever backwards and forwards will allow you to make gearshifts rapidly.

Up (+) : Push the lever forward once to shift up one gear.

Down (-) : Pull the lever backwards once to shift down one gear.

DS mode (Drive Sporty) - DCT

Ds mode supports the performance mode for driver. To shift the Ds mode, shift the transaxle to Ds mode which is center of sports mode. If you shift [+] or [–] gear, the mode is change to sports mode. The transmission shift is automatically changed at higher engine speeds by engine load, your driving style, vehicle condition.

In Ds mode, while coasting downhill, the engine does not support the vehicle to slow down.

In Ds mode, if you control the paddle shifter, the gear will be changed to sports mode. If the gear is changed to D (Drive), the gear will be changed to D (Drive) mode.

✻ NOTICE - DCT

While stopping the vehicle by applying parking brake in D gear, even if you release the parking brake, the vehicle may not move. In this case, you can drive the vehicle by applying the foot brake and release, applying the accelerator or shifting the lever (D → N → D).

✻ NOTICE

- **In sports mode, the driver must execute upshifts in accordance with road conditions, taking care to keep the engine speed below the red zone.**
- **In sports mode, only the 6 forward gears can be selected. To reverse or park the vehicle, move the shift lever to the R (Reverse) or P (Park) position as required.**
- **In sports mode, downshifts are made automatically when the vehicle slows down. When the vehicle stops, 1st gear is automatically selected.**
- **In sports mode, when the engine rpm approaches the red zone shift points are varied to upshift automatically.**
- **To maintain the required levels of vehicle performance and safety, the system may not execute certain gearshifts when the shift lever is operated.**
- **When driving on a slippery road, push the shift lever forward into the +(up) position. This causes the transaxle to shift into the 2nd gear which is better for smooth driving on a slippery road. Push the shift lever to the -(down) side to shift back to the 1st gear.**

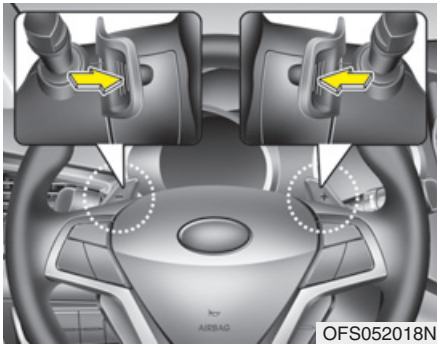

Paddle shifter (if equipped)

The paddle shifter is available when the shift lever is in the D position, DS mode or the sports mode.

The paddle shifter can operate when the vehicle speed is more than 10km/h.
Pull the [+] or [-] paddle shifter once to shift up or down one gear and the system changes from D (Drive) mode or DS mode you used to sports mode.
If the vehicle speed is lower than 10km/h, if you depress the accelerator pedal for more than 7 seconds, if you shift the shift lever from D to sport mode and shift it from sports mode to D again or if you hold the paddle shifter [+] lever over 1 second, the system will change from sports mode to D (Drive) mode or DS mode you used.

With the shift lever in the sport mode

Pull the [+] or [-] paddle shifter once to shift up or down one gear.

✻ NOTICE

- **If you pull the [+] and [-] paddle shifters at the same time, you can't shift the gear.**
- **When you change the DS mode to manual mode, if you want to use DS mode again, shift the gear lever to D and shift DS mode.**

Shift lock system (if equipped)

For your safety, the automatic transaxle has a shift lock system which prevents shifting the transaxle from P (Park) or N (Neutral) into R (Reverse) unless the brake pedal is depressed.

To shift the transaxle from P (Park) or N (Neutral) into R (Reverse):

1. Depress and hold the brake pedal.
2. Start the engine or turn the ignition switch to the ON position.
3. Move the shift lever.

If the brake pedal is repeatedly depressed and released with the shift lever in the P (Park) position, a chattering noise near the shift lever may be heard. This is a normal condition.

⚠ WARNING

Always fully depress the brake pedal before and while shifting out of the P (Park) position into another position to avoid inadvertent motion of the vehicle which could injure persons in or around the car.

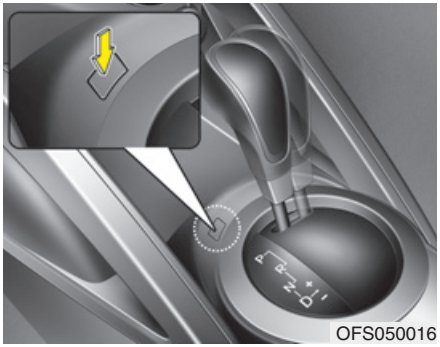

Shift-lock override (if equipped)

If the shift lever cannot be moved from the P (Park) or N (Neutral) position into R (Reverse) position with the brake pedal depressed, continue depressing the brake, then do the following:

1. Carefully remove the cap covering the shift-lock access hole.
2. Insert a screwdriver into the access hole and press down on the screwdriver.
3. Move the shift lever.
4. We recommend that the system be inspected by an authorized HYUNDAI dealer.

Ignition key interlock system (if equipped)

The ignition key cannot be removed unless the shift lever is in the P (Park) position. If the ignition switch is in any other position, the key cannot be removed.

Good driving practices

- Never move the shift lever from P (Park) or N (Neutral) to any other position with the accelerator pedal depressed.
- Never move the shift lever into P (Park) when the vehicle is in motion.
- Be sure the vehicle is completely stopped before you attempt to shift into R (Reverse) or D (Drive).
- Never take the vehicle out of gear and coast down a hill. This may be extremely hazardous. Always leave the vehicle in gear when moving.
- Do not "ride" the brakes. This can cause them to overheat and malfunction. Instead, when you are driving down a long hill, slow down and shift to a lower gear. When you do this, engine braking will help slow down the vehicle.
- Slow down before shifting to a lower gear. Otherwise, the lower gear may not be engaged.
- Always use the parking brake. Do not depend on placing the transaxle in P (Park) to keep the vehicle from moving.

- Exercise extreme caution when driving on a slippery surface. Be especially careful when braking, accelerating or shifting gears. On a slippery surface, an abrupt change in vehicle speed can cause the drive wheels to lose traction and the vehicle to go out of control.
- Optimum vehicle performance and economy is obtained by smoothly depressing and releasing the accelerator pedal.

⚠ WARNING

- **Always buckle-up! In a collision, an unbelted occupant is significantly more likely to be seriously injured or killed than a properly belted occupant.**
- **Avoid high speeds when cornering or turning.**
- **Do not make quick steering wheel movements, such as sharp lane changes or fast, sharp turns.**
- **The risk of rollover is greatly increased if you lose control of your vehicle at highway speeds.**
- **Loss of control often occurs if two or more wheels drop off the roadway and the driver oversteers to reenter the roadway.**
- **In the event your vehicle leaves the roadway, do not steer sharply. Instead, slow down before pulling back into the travel lanes.**
- **Never exceed posted speed limits.**

⚠ WARNING

If your vehicle becomes stuck in snow, mud, sand, etc., then you may attempt to rock the vehicle free by moving it forward and backward. Do not attempt this procedure if people or objects are anywhere near the vehicle. During the rocking operation the vehicle may suddenly move forward of backward as it becomes unstuck, causing injury or damage to nearby people or objects.

Moving up a steep grade from a standing start

Auto transaxle and DCT

To move up a steep grade from a standing start, depress the brake pedal, shift the shift lever to D (Drive). Select the appropriate gear depending on load weight and steepness of the grade, and release the parking brake. Depress the accelerator pedal gradually while releasing the service brakes.

Auto transaxle

When accelerating from a stop on a steep hill, the vehicle may have a tendency to roll backwards. Shifting the shift lever into 2 (Second Gear) will help prevent the vehicle from rolling backwards.

BRAKE SYSTEM

Power brakes

Your vehicle has power-assisted brakes that adjust automatically through normal usage.

In the event that the power-assisted brakes lose power because of a stalled engine or some other reason, you can still stop your vehicle by applying greater force to the brake pedal than you normally would. The stopping distance, however, will be longer.

When the engine is not running, the reserve brake power is partially depleted each time the brake pedal is applied. Do not pump the brake pedal when the power assist has been interrupted.

Pump the brake pedal only when necessary to maintain steering control on slippery surfaces.

⚠ WARNING - Brakes

- **Do not drive with your foot resting on the brake pedal. This will create abnormal high brake temperatures, excessive brake lining and pad wear, and increased stopping distances.**

(Continued)

(Continued)

- **When descending a long or steep hill, shift to a lower gear and avoid continuous application of the brakes. Continuous brake application will cause the brakes to overheat and could result in a temporary loss of braking performance.**
- **Wet brakes may impair the vehicle's ability to safely slow down; the vehicle may also pull to one side when the brakes are applied. Applying the brakes lightly will indicate whether they have been affected in this way. Always test your brakes in this fashion after driving through deep water. To dry the brakes, apply them lightly while maintaining a safe forward speed until brake performance returns to normal.**
- **Always, confirm the position of the brake and accelerator pedal before driving. If you don't check the position of the accelerator and brake pedal before driving, you may depress the accelerator instead of the brake pedal. It may cause a serious accident.**

In the event of brake failure

If service brakes fail to operate while the vehicle is in motion, you can make an emergency stop with the parking brake. The stopping distance, however, will be much greater than normal.

⚠ WARNING - Parking brake

Applying the parking brake while the vehicle is moving at normal speeds can cause a sudden loss of control of the vehicle. If you must use the parking brake to stop the vehicle, use great caution in applying the brake.

Disc brakes wear indicator

Your vehicle has disc brakes.

When your brake pads are worn and new pads are required, you will hear a high-pitched warning sound from your front brakes or rear brakes (if equipped). You may hear this sound come and go or it may occur whenever you depress the brake pedal.

Please remember that some driving conditions or climates may cause a brake squeal when you first apply (or lightly apply) the brakes. This is normal and does not indicate a problem with your brakes.

⚠ CAUTION

- ***To avoid costly brake repairs, do not continue to drive with worn brake pads.***
- ***Always replace brake pads as complete front or rear axle sets.***

⚠ WARNING - Brake wear

This brake wear warning sound means your vehicle needs service. If you ignore this audible warning, you will eventually lose braking performance, which could lead to a serious accident.

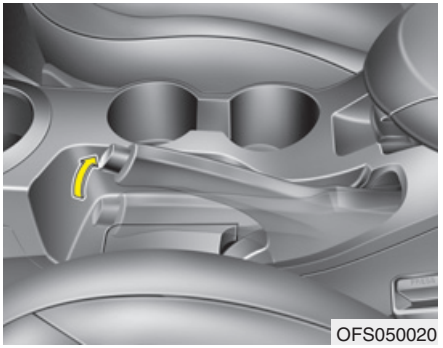
OFS050020

Parking brake

Applying the parking brake

To engage the parking brake, first apply the foot brake and then without pressing the release button in, pull the parking brake lever up as far as possible. In addition it is recommended that when parking the vehicle on a gradient, the shift lever should be positioned in the appropriate low gear for manual transaxle vehicles or in the P (Park) position for automatic transaxle/Double clutch transmission vehicles.

⚠ CAUTION

- ***Driving with the parking brake applied will cause excessive brake pad (or lining) and brake rotor wear.***
- ***Do not operate the parking brake while the vehicle is moving except in an emergency situation. It could damage the vehicle system and make endanger driving safety.***

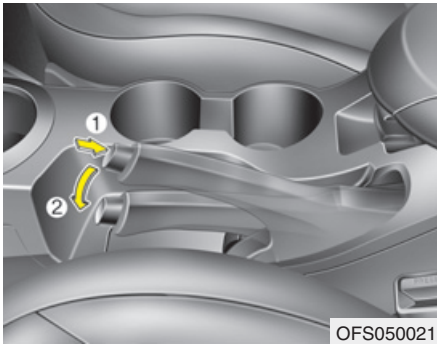

OFS050021

Releasing the parking brake

To release the parking brake, first apply the foot brake and pull up the parking brake lever slightly. Secondly press the release button (1) and lower the parking brake lever (2) while pressing the button.

⚠ WARNING

- **To prevent unintentional movement when stopped and leaving the vehicle, do not use the shift lever instead of the parking brake. Set the parking brake AND make sure the shift lever is securely positioned in 1st (First) gear or R (Reverse) for manual transaxle equipped vehicles and in P (Park) for automatic transaxle/double clutch transmission equipped vehicles.**
- **Never allow anyone who is unfamiliar with the vehicle to touch the parking brake. If the parking brake is released unintentionally, serious injury may occur.**
- **All vehicles should always have the parking brake fully engaged when parking to avoid inadvertent movement of the vehicle which can injure occupants or pedestrians.**

WK-23

Check the brake warning light by turning the ignition switch ON (do not start the engine). This light will illuminate when the parking brake is applied with the ignition switch in the START or ON position.

Before driving, be sure the parking brake is fully released and the brake warning light is off.

If the brake warning light remains on after the parking brake is released while the engine is running, there may be a malfunction in the brake system. Immediate attention is necessary.

If at all possible, cease driving the vehicle immediately. If that is not possible, use extreme caution while operating the vehicle and only continue to drive the vehicle until you can reach a safe location or repair shop.

Anti-lock brake system (ABS) (if equipped)

⚠ WARNING

ABS (or ESC) will not prevent accidents due to improper or dangerous driving maneuvers. Even though vehicle control is improved during emergency braking, always maintain a safe distance between you and objects ahead. Vehicle speeds should always be reduced during extreme road conditions.

The braking distance for vehicles equipped with an anti-lock braking system (or Electronic Stability Control System) may be longer than for those without it in the following road conditions.

During these conditions the vehicle should be driven at reduced speeds:

- **Rough, gravel or snow-covered roads.**
- **With tire chains installed.**

(Continued)

(Continued)

- **On roads where the road surface is pitted or has different surface height.**

The safety features of an ABS (or ESC) equipped vehicle should not be tested by high speed driving or cornering. This could endanger the safety of yourself or others.

The ABS continuously senses the speed of the wheels. If the wheels are going to lock, the ABS system repeatedly modulates the hydraulic brake pressure to the wheels.

When you apply your brakes under conditions which may lock the wheels, you may hear a “tik-tik” sound from the brakes, or feel a corresponding sensation in the brake pedal. This is normal and it means your ABS is active.

In order to obtain the maximum benefit from your ABS in an emergency situation, do not attempt to modulate your brake pressure and do not try to pump your brakes. Depress your brake pedal as hard as possible or as hard as the situation allows the ABS to control the force being delivered to the brakes.

✻ NOTICE

A click sound may be heard in the engine compartment when the vehicle begins to move after the engine is started. These conditions are normal and indicate that the anti-lock brake system is functioning properly.

- Even with the anti-lock brake system, your vehicle still requires sufficient stopping distance. Always maintain a safe distance from the vehicle in front of you.
- Always slow down when cornering. The anti-lock brake system cannot prevent accidents resulting from excessive speeds.
- On loose or uneven road surfaces, operation of the anti-lock brake system may result in a longer stopping distance than for vehicles equipped with a conventional brake system.

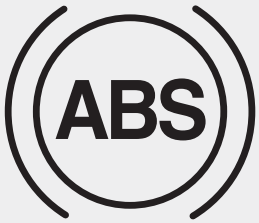

W-78

⚠ CAUTION

- ***If the ABS warning light is on and stays on, you may have a problem with the ABS. In this case, however, your regular brakes will work normally.***
- ***The ABS warning light will stay on for approximately 3 seconds after the ignition switch is ON. During that time, the ABS will go through self-diagnosis and the light will go off if everything is normal. If the light stays on, you may have a problem with your ABS. We recommend that you contact an authorized HYUNDAI dealer.***

⚠ CAUTION

- ***When you drive on a road having poor traction, such as an icy road, and operate your brakes continuously, the ABS will be active continuously and the ABS warning light may illuminate. Pull your vehicle over to a safe place and stop the engine.***
- ***Restart the engine. If the ABS warning light is off, then your ABS system is normal.***

  Otherwise, you may have a problem with the ABS. We recommend that you contact an authorized HYUNDAI dealer.

✻ NOTICE

When you jump start your vehicle because of a drained battery, the engine may not run as smoothly and the ABS warning light may turn on at the same time. This happens because of low battery voltage. It does not mean your ABS is malfunctioning.

- **Do not pump your brakes!**
- **Have the battery recharged before driving the vehicle.**

■ Type A

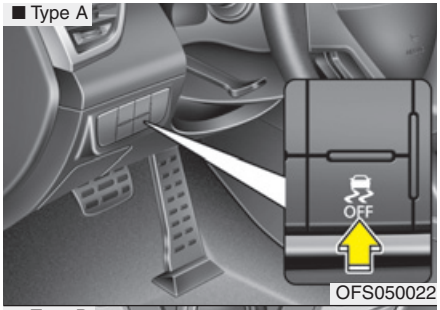

OFS050022

■ Type B

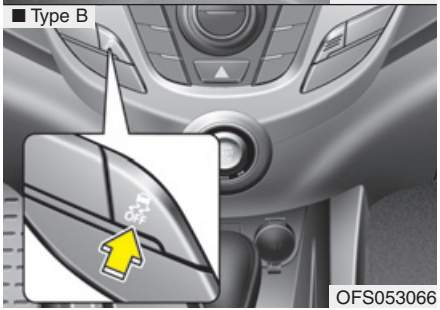

OFS053066

Electronic Stability Control (ESC) (if equipped)

The Electronic Stability Control (ESC) system is designed to stabilize the vehicle during cornering maneuvers. ESC checks where you are steering and where the vehicle is actually going.

ESC applies the brakes at individual wheels and intervenes with the engine management system to stabilize the vehicle.

⚠ WARNING

Never drive too fast according to the road conditions or too quickly when cornering. Electronic Stability Control (ESC) will not prevent accidents. Excessive speed in turns, abrupt maneuvers and hydroplaning on wet surfaces can still result in serious accidents. Only a safe and attentive driver can prevent accidents by avoiding maneuvers that cause the vehicle to lose traction. Even with ESC installed, always follow all the normal precautions for driving - including driving at safe speeds for the conditions.

The Electronic Stability Control (ESC) system is an electronic system designed to help the driver maintain vehicle control under adverse conditions. It is not a substitute for safe driving practices. Factors including speed, road conditions and driver steering input can all affect whether ESC will be effective in preventing a loss of control. It is still your responsibility to drive and corner at reasonable speed and to leave a sufficient margin of safety.

When you apply your brakes under conditions which may lock the wheels, you may hear a “tik-tik” sound from the brakes, or feel a corresponding sensation in the brake pedal. This is normal and it means your ESC is active.

✻ NOTICE

A click sound may be heard in the engine compartment when the vehicle begins to move after the engine is started. These conditions are normal and indicate that the Electronic Stability Control System is functioning properly.

ESC operation

ESC ON condition

-

- When the ignition is turned ON, ESC and ESC OFF indicator lights illuminate for approximately 3 seconds, then ESC is turned on.
- Press the ESC OFF button for at least half a second after turning the ignition ON to turn ESC off. (ESC OFF indicator will illuminate). To turn the ESC on, press the ESC OFF button (ESC OFF indicator light will go off).
- When starting the engine, you may hear a slight ticking sound. This is the ESC performing an automatic system self-check and does not indicate a problem.

When operating

When the ESC is in operation, ESC indicator light blinks.

- When the Electronic Stability Control is operating properly, you can feel a slight pulsation in the vehicle. This is only the effect of brake control and indicates nothing unusual.
- When moving out of the mud or slippery road, depressing the accelerator pedal may not cause the engine rpm (revolutions per minute) to increase.

ESC operation off

ESC OFF state

- To cancel ESC operation, press the ESC OFF button (ESC OFF indicator light illuminates).
- If the ignition switch is turned to the LOCK position when ESC is off, ESC remains off. Upon restarting the engine, the ESC will automatically turn on again.

■ ESC indicator light

■ ESC OFF indicator light

Indicator light

When ignition switch is turned to the ON position, the indicator light illuminates, then goes off if the ESC system is operating normally.

The ESC indicator light blinks whenever ESC is operating or illuminates when ESC fails to operate.

ESC OFF indicator light comes on when the ESC is turned off with the button.

⚠ CAUTION

Driving with varying tire or wheel sizes may cause the ESC system to malfunction. When replacing tires, make sure they are the same size as your original tires.

⚠ WARNING

The Electronic Stability Control system is only a driving aid; use precautions for safe driving by slowing down on curved, snowy, or icy roads. Drive slowly and don't attempt to accelerate whenever the ESC indicator light is blinking, or when the road surface is slippery.

ESC OFF usage

When driving

- ESC should be turned on for daily driving whenever possible.
- To turn ESC off while driving, press the ESC OFF button while driving on a flat road surface.

⚠ WARNING

Never press ESC OFF button while ESC is operating (ESC indicator light blinks).

If ESC is turned off while ESC is operating, the vehicle may slip out of control.

✻ NOTICE

- **When operating the vehicle on a dynamometer, ensure that the ESC is turned off (ESC OFF light illuminated). If the ESC is left on, it may prevent the vehicle speed from increasing, and result in false diagnosis.**
- **Turning the ESC off does not affect ABS or brake system operation.**

Hill-start assist control (HAC) (if equipped)

Hill-start Assist Control is a function for your convenience. The main intention is to prevent the vehicle from rolling backwards while driving uphill on an inclined surface. HAC holds the braking pressure built up by the driver while stopping for 1.5 seconds (double clutch transmission) after releasing the brake pedal.

During the pressure-hold period, the driver has enough time to depress the accelerator pedal to drive off.

The braking pressure is reduced as soon as the system detects the driver's intention to drive.

⚠ WARNING

The HAC is usually activated only for 1.5 seconds (double clutch transmission). The driver should be careful not to roll backward causing an accident with an object or person behind.

✻ NOTICE

- **The HAC does not operate when the transaxle shift lever is in the P (Park) or N (Neutral) position.**
- **The HAC activates even though the ESC is off but it does not activate when the ESC has malfunctioned.**

Vehicle stability management (VSM) (if equipped)

This system provides further enhancements to vehicle stability and steering responses when a vehicle is driving on a slippery road or a vehicle detected changes in coefficient of friction between right wheels and left wheels when braking.

VSM operation

When the VSM is in operation, ESC indicator light ( ) blinks.

When the vehicle stability management is operating properly, you can feel a slight pulsation in the vehicle. This is only the effect of brake control and indicates nothing unusual.

The VSM does not operate when:

- Driving on bank road such as gradient or incline
- Driving rearward
- ESC OFF indicator light ( ) remains on the instrument cluster
- EPS indicator light remains on the instrument cluster

VSM operation off

If you press the ESC OFF button to turn off the ESC, the VSM will also cancel and the ESC OFF indicator light ( ) illuminates.

To turn on the VSM, press the button again. The ESC OFF indicator light goes out.

Malfunction indicator

The VSM can be deactivated even if you don't cancel the VSM operation by pressing the ESC OFF button. It indicates that a malfunction has been detected somewhere in the Electric Power Steering system or VSM system. If the ESC indicator light ( ) or EPS warning light remains on, we recommend that the system be checked by an authorized HYUNDAI dealer.

✻ NOTICE

- **The VSM is designed to function above approximately 15 km/h (9 mph) on curves.**
- **The VSM is designed to function above approximately 30 km/h (18 mph) when a vehicle is braking on a split-mu road. The split-mu road is made of surfaces which have different friction forces.**

⚠ WARNING

- **The Vehicle Stability Management system is not a substitute for safe driving practices but a supplementary function only. It is the responsibility of the driver to always check the speed and the distance to the vehicle ahead. Always hold the steering wheel firmly while driving.**
- **Your vehicle is designed to activate according to the driver's intention, even with installed VSM. Always follow all the normal precautions for driving at safe speeds for the conditions – including driving inclement weather and on a slippery road.**
- **Driving with varying tire or wheel sizes may cause the VSM system to malfunction. When replacing tires, make sure they are the same size as your original tires.**

Good braking practices

- Check to be sure the parking brake is not engaged and that the parking brake indicator light is out before driving away.
- Driving through water may get the brakes wet. They can also get wet when the vehicle is washed. Wet brakes can be dangerous! Your vehicle will not stop as quickly if the brakes are wet. Wet brakes may cause the vehicle to pull to one side.

  To dry the brakes, apply the brakes lightly until the braking operation returns to normal, to keep the vehicle under control at all times. If the braking action does not return to normal, stop as soon as it is safe to do so and we recommend that you call an authorized HYUNDAI dealer.
- Don't coast down hills with the vehicle out of gear. This is extremely hazardous. Keep the vehicle in gear at all times, use the brakes to slow down, then shift to a lower gear so that engine braking will help you maintain a safe speed.

- Don't "ride" the brake pedal. Resting your foot on the brake pedal while driving can be dangerous because the brakes might overheat and lose their effectiveness. It also increases the wear of the brake components.
- If a tire goes flat while you are driving, apply the brakes gently and keep the vehicle pointed straight ahead while you slow down. When you are moving slowly enough for it to be safe to do so, pull off the road and stop in a safe place.
- If your vehicle is equipped with an automatic transaxle/double clutch transmission, don't let your vehicle creep forward. To avoid creeping forward, keep your foot firmly on the brake pedal when the vehicle is stopped.
- Be cautious when parking on a hill. Firmly engage the parking brake and place the shift lever in P (automatic transaxle)/double clutch transmission or in first or reverse gear (manual transaxle). If your vehicle is facing downhill, turn the front wheels toward the curb to help keep the vehicle from rolling. If your vehicle is facing uphill, turn the front wheels away from the curb to help keep the vehicle from rolling. If there is no curb or if it is required by other conditions to keep the vehicle from rolling, block the wheels.
- Under some conditions your parking brake can freeze in the engaged position. This is most likely to happen when there is an accumulation of snow or ice around or near the rear brakes or if the brakes are wet. If there is a risk that the parking brake may freeze, apply it only temporarily while you put the shift lever in P (automatic transaxle/double clutch transmission) or in first or reverse gear (manual transaxle) and block the rear wheels so the vehicle cannot roll. Then release the parking brake.
- Do not hold the vehicle on an upgrade with the accelerator pedal. This can cause the transaxle to overheat. Always use the brake pedal or parking brake.

CRUISE CONTROL SYSTEM (IF EQUIPPED)

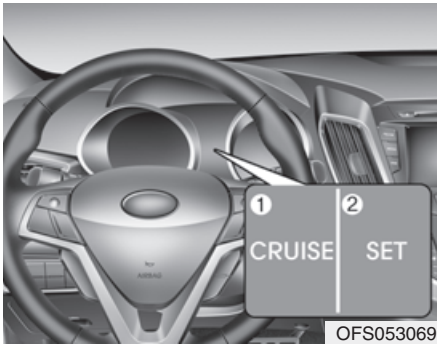

OFS053069

1. Cruise indicator
2. Set indicator

The cruise control system allows you to program the vehicle to maintain a constant speed without depressing the accelerator pedal.

This system is designed to function above approximately 40 km/h (25 mph).

⚠ WARNING

- **If the cruise control is left on, (CRUISE indicator light in the instrument cluster illuminated) the cruise control can be switched on accidentally. Keep the cruise control system off (CRUISE indicator light OFF) when the cruise control is not in use, to avoid inadvertently setting a speed.**
- **Use the cruise control system only when driving on open highways in good weather.**
- **Do not use the cruise control when it may not be safe to keep the vehicle at a constant speed, for instance, driving in heavy or varying traffic, or on slippery (rainy, icy or snow-covered) or winding roads or over 6% up-hill or down-hill roads.**
- **Pay particular attention to the driving conditions whenever using the cruise control system.**

⚠ CAUTION

During cruise-speed driving with a manual transaxle vehicle, do not shift into neutral without depressing the clutch pedal, since the engine will be overrevved. If this happens, depress the clutch pedal or release the cruise control ON-OFF switch.

✻ NOTICE

During normal cruise control operation, when the SET switch is activated or reactivated after applying the brakes, the cruise control will energize after approximately 3 seconds. This delay is normal.

✻ NOTICE

To activate cruise control, depress the brake pedal at least once after turning the ignition switch to the ON position or starting the engine. This is to check if the brake switch which is important part to cancel cruise control is in normal condition.

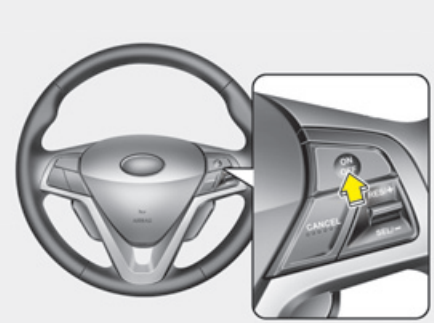

OFS052050L

To set cruise control speed:

1. Press the cruise ON/OFF button on the steering wheel, to turn the system on. The CRUISE indicator light in the instrument cluster will illuminate.
2. Accelerate to the desired speed, which must be more than 40 km/h (25 mph).

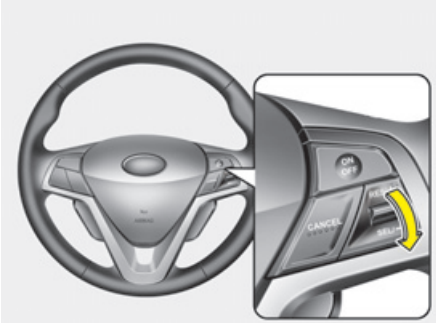

OFS052052L

3. Move the lever down (to SET-), and release it at the desired speed. The SET indicator light in the instrument cluster will illuminate. Release the accelerator pedal at the same time. The desired speed will automatically be maintained.

On a steep grade, the vehicle may slow down or speed up slightly while going downhill.

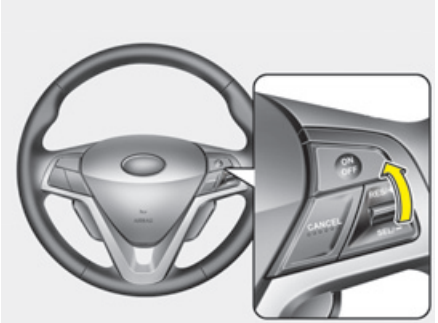

OFS052051L

To increase cruise control set speed:

Follow either of these procedures:

- Move the lever up (to RES+) and hold it. Your vehicle will accelerate. Release the lever at the speed you want.
- Move the lever up (to RES+) and release it immediately. The cruising speed will increase by 2.0 km/h (1.2 mph) or 1.6 km/h (1.0 mph) each time you move the lever up (to RES+) in this manner.

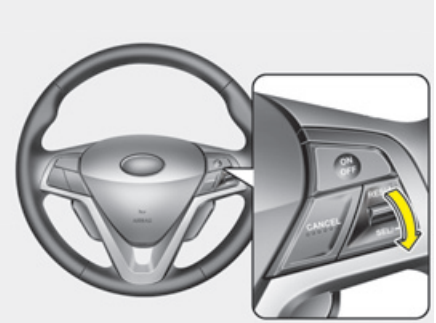

OFS052052L

To decrease the cruising speed:

Follow either of these procedures:

- Move the lever down (to SET-) and hold it. Your vehicle will gradually slow down. Release the lever at the speed you want to maintain.
- Move the lever down (to SET-) and release it immediately. The cruising speed will decrease by 2.0 km/h (1.2 mph) or 1.6 km/h (1.0 mph) each time you move the lever down (to SET-) in this manner.

To temporarily accelerate with the cruise control on:

If you want to speed up temporarily when the cruise control is on, depress the accelerator pedal. Increased speed will not interfere with cruise control operation or change the set speed.

To return to the set speed, take your foot off the accelerator pedal.

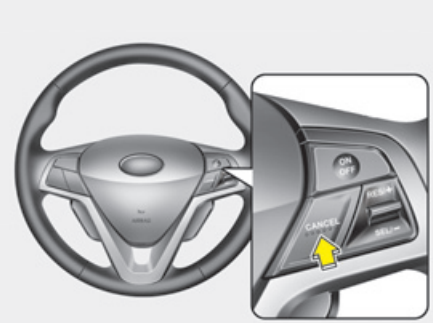

OFS052053L

To cancel cruise control, do one of the following:

- Depress the brake pedal.
- Depress the clutch pedal if equpped with a manual transaxle.
- Shift into N (Neutral) if equpped with an automatic transaxle/double clutch transmission.
- Press the CANCEL switch located on the steering wheel.
- Decrease the vehicle speed lower than the memory speed by 20 km/h (12 mph).
- Decrease the vehicle speed to less than approximately 40 km/h (25 mph).

Each of these actions will cancel cruise control operation (the SET indicator light in the instrument cluster will go off), but it will not turn the system off. If you wish to resume cruise control operation, move up the lever (to RES+) located on your steering wheel. You will return to your previously preset speed.

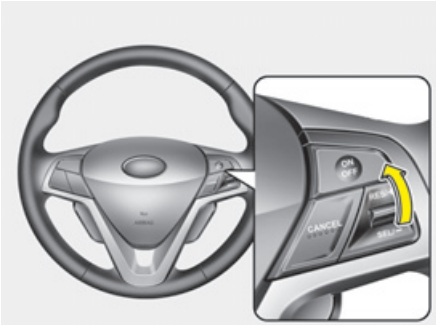

OFS052051L

To resume cruising speed at more than approximately 40 km/h (25 mph):

If any method other than the cruise ON/OFF switch was used to cancel cruising speed and the system is still activated, the most recent set speed will automatically resume when you move the lever up (to RES+).

It will not resume, however, if the vehicle speed has dropped below approximately 40 km/h (25 mph).

To turn cruise control off, do one of the following:

- Press the cruise ON/OFF button (the CRUISE indicator light in the instrument cluster will go off).
- Turn the ignition off.

Both of these actions cancel cruise control operation. If you want to resume cruise control operation, repeat the steps provided in "To set cruise control speed" on the previous page.

ACTIVE ECO SYSTEM (IF EQUIPPED)

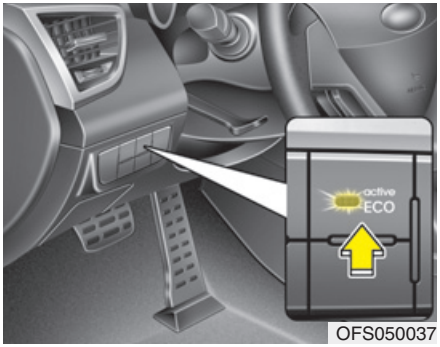

OFS050037

Active ECO operation

Active ECO helps improve fuel efficiency by controlling the engine, transaxle and air conditioner. But fuel-efficiency can be changed by the driver's driving habits and road conditions.

- When the Active ECO button is pressed the ECO indicator (green) will illuminate to show that the Active ECO is operating.
- When the Active ECO is activated, it does not turn off even though the engine is restarted again. To turn off the system, press the active ECO button again.
- If Active ECO is turned off, it will return to the ECO mode.

Limitation of Active ECO operation :

If the following conditions occur while Active ECO is operating, the system operation is limited even though there is no change in the ECO indicator.

- When the coolant temperature is low:
  The system will be limited until engine performance becomes normal.
- When driving up a hill:
  The system will be limited to gain power when driving uphill because the engine torque is restricted.
- When using sports mode:
  The system will be limited according to the shift location.
- When the accelerator pedal is deeply pressed for a few seconds:
  The system will be limited, judging that the driver wants to speed up.

ECONOMICAL OPERATION

Your vehicle's fuel economy depends mainly on your style of driving, where you drive and when you drive.

Each of these factors affects how many kilometers (miles) you can get from a liter (gallon) of fuel. To operate your vehicle as economically as possible, use the following driving suggestions to help save money in both fuel and repairs:

- Drive smoothly. Accelerate at a moderate rate. Don't make "jack-rabbit" starts or full-throttle shifts and maintain a steady cruising speed. Don't race between stoplights. Try to adjust your speed to the traffic so you don't have to change speeds unnecessarily. Avoid heavy traffic whenever possible. Always maintain a safe distance from other vehicles so you can avoid unnecessary braking. This also reduces brake wear.
- Drive at a moderate speed. The faster you drive, the more fuel your vehicle uses. Driving at a moderate speed, especially on the highway, is one of the most effective ways to reduce fuel consumption.
- Don't "ride" the brake or clutch pedal. This can increase fuel consumption and also increase wear on these components. In addition, driving with your foot resting on the brake pedal may cause the brakes to overheat, which reduces their effectiveness and may lead to more serious consequences.
- Take care of your tires. Keep them inflated to the recommended pressure. Incorrect inflation, either too much or too little, results in unnecessary tire wear. Check the tire pressures at least once a month.
- Be sure that the wheels are aligned correctly. Improper alignment can result from hitting curbs or driving too fast over irregular surfaces. Poor alignment causes faster tire wear and may also result in other problems as well as greater fuel consumption.
- Keep your vehicle in good condition. For better fuel economy and reduced maintenance costs, maintain your vehicle in accordance with the maintenance schedule in section 7. If you drive your vehicle in severe conditions, more frequent maintenance is required (see section 7 for details).
- Keep your vehicle clean. For maximum service, your vehicle should be kept clean and free of corrosive materials. It is especially important that mud, dirt, ice, etc. not be allowed to accumulate on the underside of the vehicle. This extra weight can result in increased fuel consumption and also contribute to corrosion.
- Travel lightly. Don't carry unnecessary weight in your vehicle. Weight reduces fuel economy.
- Don't let the engine idle longer than necessary. If you are waiting (and not in traffic), turn off your engine and restart only when you're ready to go.

- Remember, your vehicle does not require extended warm-up. After the engine has started, allow the engine to run for 10 to 20 seconds prior to placing the vehicle in gear. In very cold weather, however, give your engine a slightly longer warm-up period.
- Don't "lug" or "over-rev" the engine. Lugging is driving too slowly in too high a gear resulting engine bucking. If this happens, shift to a lower gear. Over-revving is racing the engine beyond its safe limit. This can be avoided by shifting at the recommended speeds.
- Use your air conditioning sparingly. The air conditioning system is operated by engine power so your fuel economy is reduced when you use it.
- Open windows at high speeds can reduce fuel economy.
- Fuel economy is less in crosswinds and headwinds. To help offset some of this loss, slow down when driving in these conditions.

Keeping a vehicle in good operating condition is important both for economy and safety. We recommend in general that the vehicle be serviced by an authorized HYUNDAI dealer.

⚠ WARNING - Engine off during motion

Never turn the engine off to coast down hills or anytime the vehicle is in motion. The power steering and power brakes will not function properly without the engine running. Instead, keep the engine on and downshift to an appropriate gear for engine braking effect. In addition, turning off the ignition while driving could engage the steering wheel lock resulting in loss of vehicle steering which could cause serious injury or death.

SPECIAL DRIVING CONDITIONS

Hazardous driving conditions

When hazardous driving conditions are encountered such as water, snow, ice, mud, sand, or similar hazards, follow these suggestions:

- Drive cautiously and allow extra distance for braking.
- Avoid sudden braking or steering.
- When braking with non-ABS brakes pump the brake pedal with a light up-and-down motion until the vehicle is stopped.

⚠ WARNING - ABS

Do not pump the brake pedal on a vehicle equipped with ABS.

- If stalled in snow, mud, or sand, use second gear. Accelerate slowly to avoid spinning the drive wheels.
- Use sand, rock salt, tire chains, or other non-slip material under the drive wheels to provide traction when stalled in ice, snow, or mud.

⚠ WARNING - Downshifting

Downshifting with an automatic transaxle/double clutch transmission, while driving on slippery surfaces can cause an accident. The sudden change in tire speed could cause the tires to skid. Be careful when downshifting on slippery surfaces.

Rocking the vehicle

If it is necessary to rock the vehicle to free it from snow, sand, or mud, first turn the steering wheel right and left to clear the area around your front wheels. Then, shift back and forth between 1st (First) and R (Reverse) in vehicles equipped with a manual transaxle or R (Reverse) and any forward gear in vehicles equipped with an automatic transaxle/double clutch transmission. Do not race the engine, and spin the wheels as little as possible. If you are still stuck after a few tries, have the vehicle pulled out by a tow vehicle to avoid engine overheating and possible damage to the transaxle.

⚠ CAUTION

Prolonged rocking may cause engine over-heating, transaxle damage or failure, and tire damage.

⚠ WARNING - Spinning tires

Do not spin the wheels, especially at speeds more than 56 km/h (35 mph). Spinning the wheels at high speeds when the vehicle is stationary could cause a tire to overheat which could result in tire damage that may injure bystanders.

✻ NOTICE

The ESC system (if equipped) should be turned OFF prior to rocking the vehicle.

⚠ WARNING

If your vehicle becomes stuck in snow, mud, sand, etc., then you may attempt to rock the vehicle free by moving it forward and backward. Do not attempt this procedure if people or objects are anywhere near the vehicle. During the rocking operation the vehicle may suddenly move forward of backward as it becomes unstuck, causing injury or damage to nearby people or objects.

OFS052042L

Smooth cornering

Avoid braking or gear changing in corners, especially when roads are wet. Ideally, corners should always be taken under gentle acceleration. If you follow these suggestions, tire wear will be held to a minimum.

OMC035004

Driving at night

Because night driving presents more hazards than driving in the daylight, here are some important tips to remember:

- Slow down and keep more distance between you and other vehicles, as it may be more difficult to see at night, especially in areas where there may not be any street lights.

- Adjust your mirrors to reduce the glare from other driver's headlights.
- Keep your headlights clean and properly aimed on vehicles not equipped with the automatic headlight aiming feature. Dirty or improperly aimed headlights will make it much more difficult to see at night.
- Avoid staring directly at the headlights of oncoming vehicles. You could be temporarily blinded, and it will take several seconds for your eyes to readjust to the darkness.

OFS052043L

Driving in the rain

Rain and wet roads can make driving dangerous, especially if you're not prepared for the slick pavement. Here are a few things to consider when driving in the rain:

- A heavy rainfall will make it harder to see and will increase the distance needed to stop your vehicle, so slow down.
- Keep your windshield wiping equipment in good shape. Replace your windshield wiper blades when they show signs of streaking or missing areas on the windshield.
- If your tires are not in good condition, making a quick stop on wet pavement can cause a skid and possibly lead to an accident. Be sure your tires are in good shape.
- Turn on your headlights to make it easier for others to see you.
- Driving too fast through large puddles can affect your brakes. If you must go through puddles, try to drive through them slowly.
- If you believe you may have gotten your brakes wet, apply them lightly while driving until normal braking operation returns.

Driving in flooded areas

Avoid driving through flooded areas unless you are sure the water is no higher than the bottom of the wheel hub. Drive through any water slowly. Allow adequate stopping distance because brake performance may be affected.
After driving through water, dry the brakes by gently applying them several times while the vehicle is moving slowly.

Driving off-road

Drive carefully off-road because your vehicle may be damaged by rocks or roots of trees. Become familiar with the off-road conditions where you are going to drive before you begin driving.

OMG015008

Highway driving

Tires

Adjust the tire inflation pressures to specification. Low tire inflation pressures will result in overheating and possible failure of the tires.

Avoid using worn or damaged tires which may result in reduced traction or tire failure.

✻ NOTICE

Never exceed the maximum tire inflation pressure shown on the tires.

⚠ WARNING

- **Underinflated or overinflated tires can cause poor handling, loss of vehicle control, and sudden tire failure leading to accidents, injuries, and even death. Always check tires for proper inflation before driving. For proper tire pressures, refer to "Tires and wheels" in section 8.**
- **Driving on tires with no or insufficient tread is dangerous. Worn-out tires can result in loss of vehicle control, collisions, injury, and even death. Worn-out tires should be replaced as soon as possible and should never be used for driving. Always check the tire tread before driving your car. For further information and tread limits, refer to "Tires and wheels" in section 7.**

Fuel, engine coolant and engine oil

High speed travel consumes more fuel than urban motoring. Do not forget to check both engine coolant and engine oil.

Drive belt

A loose or damaged drive belt may result in overheating of the engine.

WINTER DRIVING

OFS050046

More weather conditions of winter result in greater wear and other problems. To minimize winter driving problem, you should follow these suggestions:

Snowy or icy conditions

To drive your vehicle in deep snow, it may be necessary to use snow tires or to install tire chains on your tires. If snow tires are needed, it is necessary to select tires equivalent in size and type of the originally equipped tires. Failure to do so may adversely affect the safety and handling of your car. Furthermore, speeding, rapid acceleration, sudden brake applications, and sharp turns are potentially very hazardous practices.
During deceleration, use engine braking to the fullest extent. Sudden brake applications on snowy or icy roads may cause skids to occur. You need to keep sufficient distance between the vehicle in operation in front and your vehicle. Also, apply the brake gently. It should be noted that installing tire chains on the tire will provide a greater driving force, but will not prevent side skids.

✻ NOTICE

Tire chains are not legal in all countries. Check the country laws before fitting tire chains.

Snow tires

If you mount snow tires on your vehicle, make sure they are radial tires of the same size and load range as the original tires. Mount snow tires on all four wheels to balance your vehicle's handling in all weather conditions. Keep in mind that the traction provided by snow tires on dry roads may not be as high as your vehicle's originally equipped tires. You should drive cautiously even when the roads are clear. Check with the tire dealer for maximum speed recommendations.

⚠ WARNING - Snow tire size

Snow tires should be equivalent in size and type to the vehicle's standard tires. Otherwise, the safety and handling of your vehicle may be adversely affected.

Do not install studded tires without first checking local, state and municipal regulations for possible restrictions against their use.

Tire chains

Since the sidewalls of radial tires are thinner, they can be damaged by mounting some types of snow chains on them. Therefore, the use of snow tires is recommended instead of snow chains. Do not mount tire chains on vehicles equipped with aluminum wheels; snow chains may cause damage to the wheels. If snow chains must be used, use wire-type chains with a thickness of less than 10 mm (0.39 in). Damage to your vehicle caused by improper snow chain use is not covered by your vehicle manufacturers warranty.

Install tire chains only on the front tires.

⚠ CAUTION

- ***Make sure the snow chains are the correct size and type for your tires. Incorrect snow chains can cause damage to the vehicle body and suspension and may not be covered by your vehicle manufacturer warranty. Also, the snow chain connecting hooks may be damaged from contacting vehicle components causing the snow chains to come loose from the tire. Make sure the snow chains are SAE class "S" certified.***
- ***Always check chain installation for proper mounting after driving approximately 0.5 to 1 km (0.3 to 0.6 miles) to ensure safe mounting. Retighten or remount the chains if they are loose.***

Chain installation

When installing chains, follow the manufacturer's instructions and mount them as tightly as you can. Drive slowly with chains installed. If you hear the chains contacting the body or chassis, stop and tighten them. If they still make contact, slow down until it stops. Remove the chains as soon as you begin driving on cleared roads.

⚠ WARNING
- Mounting chains

When mounting snow chains, park the vehicle on level ground away from traffic. Turn on the vehicle Hazard Warning flashers and place a triangular emergency warning device behind the vehicle if available. Always place the vehicle in P (Park), apply the parking brake and turn off the engine before installing snow chains.

⚠ WARNING - Tire chains

- **The use of chains may adversely affect vehicle handling.**
- **Do not exceed 30 km/h (20 mph) or the chain manufacturer's recommended speed limit, whichever is lower.**
- **Drive carefully and avoid bumps, holes, sharp turns, and other road hazards, which may cause the vehicle to bounce.**
- **Avoid sharp turns or locked-wheel braking.**

⚠ CAUTION

- ***Chains that are the wrong size or improperly installed can damage your vehicle's brake lines, suspension, body and wheels.***
- ***Stop driving and retighten the chains any time you hear them hitting the vehicle.***

Use high quality ethylene glycol coolant

Your vehicle is delivered with high quality ethylene glycol coolant in the cooling system. It is the only type of coolant that should be used because it helps prevent corrosion in the cooling system, lubricates the water pump and prevents freezing. Be sure to replace or replenish your coolant in accordance with the maintenance schedule in section 7. Before winter, have your coolant tested to assure that its freezing point is sufficient for the temperatures anticipated during the winter.

Check battery and cables

Winter puts additional burdens on the battery system. Visually inspect the battery and cables as described in section 7. We recommend that the system be checked by an authorized HYUNDAI dealer.

Change to "winter weight" oil if necessary

In some climates it is recommended that a lower viscosity "winter weight" oil be used during cold weather. See section 8 for recommendations. If you aren't sure what weight oil you should use, we recommend that you consult an authorized HYUNDAI dealer.

Check spark plugs and ignition system

Inspect your spark plugs as described in section 7 and replace them if necessary. Also check all ignition wiring and components to be sure they are not cracked, worn or damaged in any way.

To keep locks from freezing

To keep the locks from freezing, squirt an approved de-icer fluid or glycerine into the key opening. If a lock is covered with ice, squirt it with an approved de-icing fluid to remove the ice. If the lock is frozen internally, you may be able to thaw it out by using a heated key. Handle the heated key with care to avoid injury.

Use approved window washer anti-freeze in system

To keep the water in the window washer system from freezing, add an approved window washer anti-freeze solution in accordance with instructions on the container. Window washer anti-freeze is available from an authorized HYUNDAI dealer and most auto parts outlets. Do not use engine coolant or other types of anti-freeze as these may damage the paint finish.

Don't let your parking brake freeze

Under some conditions your parking brake can freeze in the engaged position. This is most likely to happen when there is an accumulation of snow or ice around or near the rear brakes or if the brakes are wet. If there is a risk the parking brake may freeze, apply it only temporarily while you put the shift lever in P (automatic transaxle/double clutch transmission) or in first or reverse gear (manual transaxle) and block the rear wheels so the vehicle cannot roll. Then release the parking brake.

Don't let ice and snow accumulate underneath

Under some conditions, snow and ice can build up under the fenders and interfere with the steering. When driving in severe winter conditions where this may happen, you should periodically check underneath the car to be sure the movement of the front wheels and the steering components is not obstructed.

Carry emergency equipment

Depending on the severity of the weather, you should carry appropriate emergency equipment. Some of the items you may want to carry include tire chains, tow straps or chains, flashlight, emergency flares, sand, shovel, jumper cables, window scraper, gloves, ground cloth, coveralls, blanket, etc.

Don't place foreign objects or materials in the engine compartment

Placement of foreign objects or materials which prevent cooling of the engine, in the engine compartment, may cause a failure or combustion. The manufacturer is not responsible for the damage caused by such placement.

VEHICLE WEIGHT

This section will guide you in the proper loading of your vehicle and/or trailer, to keep your loaded vehicle weight within its design rating capability, with or without a trailer. Properly loading your vehicle will provide maximum return of the vehicle design performance. Before loading your vehicle, familiarize yourself with the following terms for determining your vehicle's weight ratings, with or without a trailer, from the vehicle's specifications and the certification label:

Base curb weight

This is the weight of the vehicle including a full tank of fuel and all standard equipment. It does not include passengers, cargo, or optional equipment.

Vehicle curb weight

This is the weight of your new vehicle when you picked it up from your dealer plus any aftermarket equipment.

Cargo weight

This figure includes all weight added to the Base Curb Weight, including cargo and optional equipment.

GAW (Gross axle weight)

This is the total weight placed on each axle (front and rear) - including vehicle curb weight and all payload.

GAWR (Gross axle weight rating)

This is the maximum allowable weight that can be carried by a single axle (front or rear). These numbers are shown on the certification label.
The total load on each axle must never exceed its GAWR.

GVW (Gross vehicle weight)

This is the Base Curb Weight plus actual Cargo Weight plus passengers.

GVWR (Gross vehicle weight rating)

This is the maximum allowable weight of the fully loaded vehicle (including all options, equipment, passengers and cargo). The GVWR is shown on the certification label located on the driver's (or front passenger's) door sill.

Overloading

⚠ WARNING - Vehicle weight

The gross axle weight rating (GAWR) and the gross vehicle weight rating (GVWR) for your vehicle are on the certification label attached to the driver's (or front passenger's) door. Exceeding these ratings can cause an accident or vehicle damage. You can calculate the weight of your load by weighing the items (and people) before putting them in the vehicle. Be careful not to overload your vehicle.

Road warning / 6-2
In case of an emergency while driving / 6-3
If the engine will not start / 6-4
Emergency starting / 6-5
If the engine overheats / 6-8
If you have a flat tire (with spare tire) / 6-9
If you have a flat tire (with TireMobilityKit) / 6-19
Tire Pressure Monitoring System (TPMS) / 6-25
Towing / 6-30
Emergency commodity / 6-35

What to do in an emergency

6

ROAD WARNING

OFS040083

Hazard warning flasher

The hazard warning flasher serves as a warning to other drivers to exercise extreme caution when approaching, overtaking, or passing your vehicle.

It should be used whenever emergency repairs are being made or when the vehicle is stopped near the edge of a roadway.

Press the flasher switch with the ignition switch in any position. The flasher switch is located in the center console switch panel. All turn signal lights will flash simultaneously.

- The hazard warning flasher operates whether your vehicle is running or not.
- The turn signals do not work when the hazard flasher is on.
- The hazard warning flasher should always be on while the vehicle is being towed.

IN CASE OF AN EMERGENCY WHILE DRIVING

If the engine stalls at a crossroad or crossing

- If the engine stalls at a crossroad or crossing, set the shift lever in the N (Neutral) position and then push the vehicle to a safe place.
- If your vehicle has a manual transaxle not equipped with a ignition lock switch, the vehicle can move forward by shifting to the 2nd (Second) or 3 rd (Third) gear and then turning the starter without depressing the clutch pedal.

If you have a flat tire while driving

If a tire goes flat while you are driving:

1. Take your foot off the accelerator pedal and let the vehicle slow down while driving straight ahead. Do not apply the brakes immediately or attempt to pull off the road as this may cause a loss of control. When the vehicle has slowed down to such a speed that it is safe to do so, brake carefully and pull off the road. Drive off the road as far as possible and park on a firm level ground. If you are on a divided highway, do not park in the median area between the two traffic lanes.
2. When the vehicle is stopped, turn on your emergency hazard flashers, set the parking brake and put the transaxle in P (automatic transaxle/double clutch transmission) or Reverse (manual transaxle).
3. Have all passengers get out of the vehicle. Be sure they all get out on the side of the vehicle that is away from traffic.
4. When changing a flat tire, follow the instruction provided later in this section.

If engine stalls while driving

1. Reduce your speed gradually, keeping a straight line. Move cautiously off the road to a safe place.
2. Turn on your emergency flashers.
3. Try to start the engine again. If your vehicle will not start, we recommend that you consult an authorized HYUNDAI dealer.

IF THE ENGINE WILL NOT START

If engine doesn't turn over or turns over slowly

1. If your vehicle has an automatic transaxle/double clutch transmission, be sure the shift lever is in N (Neutral) or P (Park) and the emergency brake is set.
2. Check the battery connections to be sure they are clean and tight.
3. Turn on the interior light. If the light dims or goes out when you operate the starter, the battery is discharged.
4. Check the starter connections to be sure they are securely tightened.
5. Do not push or pull the vehicle to start it. See instructions for "Jump starting".

⚠ WARNING

If the engine will not start, do not push or pull the vehicle to start it. This could result in a collision or cause other damage. In addition, push or pull starting may cause the catalytic converter to be overloaded and create a fire hazard.

If engine turns over normally but does not start

1. Check the fuel level.
2. With the ignition switch in the LOCK position, check all connectors at the ignition coils and spark plugs. Reconnect any that may be disconnected or loose.
3. Check the fuel line in the engine compartment.
4. If the engine still does not start, call an authorized HYUNDAI dealer or seek other qualified assistance.

EMERGENCY STARTING

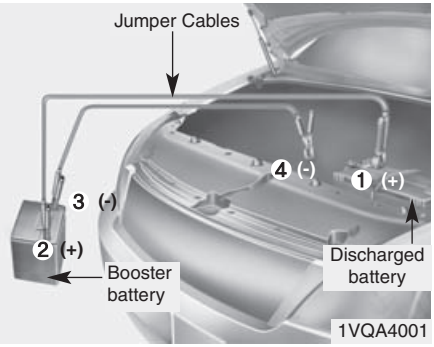

Connect cables in numerical order and disconnect in reverse order.

Jump starting

Jump starting can be dangerous if done incorrectly. Therefore, to avoid harm to yourself or damage to your vehicle or battery, follow the jump starting procedures. If in doubt, we strongly recommend that you have a competent technician or towing service jump start your vehicle.

⚠ CAUTION

Use only a 12-volt jumper system. You can damage a 12-volt starting motor, ignition system, and other electrical parts beyond repair by use of a 24-volt power supply (either two 12-volt batteries in series or a 24-volt motor generator set).

⚠ WARNING - Battery

Never attempt to check the electrolyte level of the battery as this may cause the battery to rupture or explode causing serious injury.

⚠ WARNING - Battery

- **Keep all flames or sparks away from the battery. The battery produces hydrogen gas which may explode if exposed to flame or sparks.**
- **Do not attempt to jump start the vehicle if the discharged battery is frozen or if the electrolyte level is low; the battery may rupture or explode.**
- **Do not allow the (+) and (-) jumper cables to touch. It may cause sparks.**
- **The battery may rupture or explode when you jump start with a low or frozen battery.**

Jump starting procedure

⚠ CAUTION - AGM battery (if equipped)

- ***Absorbent Glass Matt (AGM) batteries are maintenance-free and we recommend that the AGM battery be serviced by an authorized HYUNDAI dealer. For charging your AGM battery, use only fully automatic battery chargers that are specially developed for AGM batteries.***
- ***When replacing the AGM battery, we recommend that you use parts for replacement from an authorized HYUNDAI dealer.***
- ***Do not open or remove the cap on top of the battery. This may cause leaks of internal electrolyte that could result in severe injury.***
- ***If the AGM battery is reconnected or replaced, ISG function will not operate immediately.***

  If you want to use the ISG function, the battery sensor needs to be calibrated for approximately 4 hours with the ignition off.

1. Make sure the booster battery is 12-volt and that its negative terminal is grounded.
2. If the booster battery is in another vehicle, do not allow the vehicles come in contact.
3. Turn off all unnecessary electrical loads.
4. Connect the jumper cables in the exact sequence shown in the illustration. First connect one end of a jumper cable to the positive terminal of the discharged battery (1), then connect the other end to the positive terminal on the booster battery (2).
5. Proceed to connect one end of the other jumper cable to the negative terminal of the booster battery (3), then the other end to a solid, stationary, metallic point (for example, the engine lifting bracket) away from the battery (4). Do not connect it to or near any part that moves when the engine is cranked.

   Do not allow the jumper cables to contact anything except the correct battery terminals or the correct ground. Do not lean over the battery when making connections.

⚠ CAUTION - Battery cables

Do not connect the jumper cable from the negative terminal of the booster battery to the negative terminal of the discharged battery. This can cause the discharged battery to overheat and crack, releasing battery acid.

6. Start the engine of the vehicle with the booster battery and let it run at 2,000 rpm, then start the engine of the vehicle with the discharged battery.

If the cause of your battery discharging is not apparent, we recommend that the system be checked by an authorized HYUNDAI dealer.

Push-starting

Your manual transaxle-equipped vehicle should not be push-started because it might damage the emission control system.

Vehicles equipped with automatic transaxle/double clutch transmission cannot be push-started.

Follow the directions in this section for jump-starting.

⚠ WARNING

Never tow a vehicle to start it because the sudden surge forward when the engine starts could cause a collision with the tow vehicle.

IF THE ENGINE OVERHEATS

If your temperature gauge indicates overheating, you will experience a loss of power, or hear loud pinging or knocking, the engine is probably too hot. If this happens, you should:

1. Pull off the road and stop as soon as it is safe to do so.
2. Place the shift lever in P (automatic transaxle/double clutch transmission) or Neutral (manual transaxle) and set the parking brake. If the air conditioning is on, turn it off.
3. If engine coolant is running out under the vehicle or steam is coming out from the hood, stop the engine. Do not open the hood until the coolant has stopped running or the steaming has stopped. If there is no visible loss of engine coolant and no steam, leave the engine running and check to be sure the engine cooling fan is operating. If the fan is not running, turn the engine off.
4. Check to see if the water pump drive belt is missing. If it is not missing, check to see that it is tight. If the drive belt seems to be satisfactory, check for coolant leaking from the radiator, hoses or under the vehicle. (If the air conditioning had been in use, it is normal for cold water to be draining from it when you stop).

⚠ WARNING

While the engine is running, keep hair, hands and clothing away from moving parts such as the fan and drive belts to prevent injury.

5. If the water pump drive belt is broken or engine coolant is leaking out, stop the engine immediately and we recommend that you call an authorized HYUNDAI dealer.

⚠ WARNING

Do not remove the radiator cap when the engine is hot. This can allow coolant to be blown out of the opening and cause serious burns.

6. If you cannot find the cause of overheating, wait until the engine temperature has returned to normal. Then, if coolant has been lost, carefully add coolant to the reservoir to bring the fluid level in the reservoir up to the halfway mark.
7. Proceed with caution, keeping alert for further signs of overheating. If overheating happens again, we recommend that you call an authorized HYUNDAI dealer.

⚠ CAUTION

- ***Serious loss of coolant indicates there is a leak in the cooling system and we recommend that the system be checked by an authorized HYUNDAI dealer.***
- ***When the engine overheats from low engine coolant, suddenly adding engine coolant may cause cracks in the engine. To prevent damage, add engine coolant slowly in small quantities.***

IF YOU HAVE A FLAT TIRE (WITH SPARE TIRE, IF EQUIPPED)

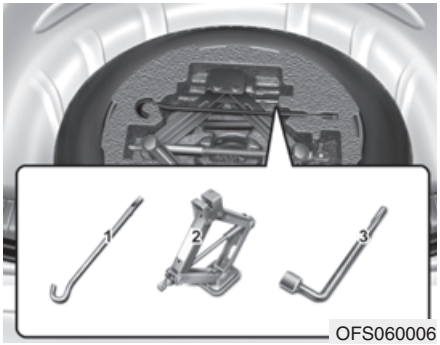

Jack and tools

The jack, jack handle, wheel lug nut wrench are stored in the luggage compartment.

Pull up the luggage box cover to reach this equipment.

(1) Jack handle

(2) Jack

(3) Wheel lug nut wrench

Jacking instructions

The jack is provided for emergency tire changing only.

To prevent the jack from “rattling” while the vehicle is in motion, store it properly.

Follow jacking instructions to reduce the possibility of personal injury.

⚠ WARNING - Changing tires

- **Never attempt vehicle repairs in the traffic lanes of a public road or highway.**
- **Always move the vehicle completely off the road and onto the shoulder before trying to change a tire. The jack should be used on firm level ground. If you cannot find a firm level place off the road, call a towing service company for assistance.**
- **Be sure to use the correct front and rear jacking positions on the vehicle; never use the bumpers or any other part of the vehicle for jacking support.**

(Continued)

(Continued)

- **The vehicle can easily roll off the jack causing serious injury or death.**
- **Do not get under a vehicle that is supported by a jack.**
- **Do not start or run the engine while the vehicle is on the jack.**
- **Do not allow anyone remain in the vehicle while it is on the jack.**
- **Make sure any children present are in a secure place away from the road and from the vehicle to be raised with the jack.**

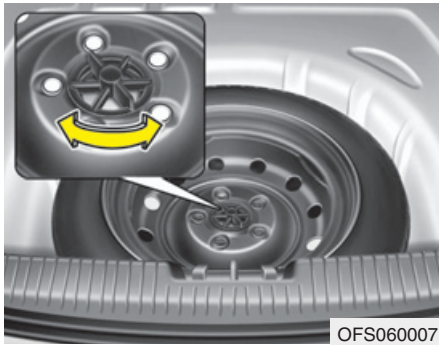
OFS060007

Removing and storing the spare tire

Turn the tire hold-down wing bolt counterclockwise.

Store the tire in the reverse order of removal.

To prevent the spare tire and tools from “rattling” while the vehicle is in motion, store them properly.

OED066033

Changing tires

1. Park on a level surface and apply the parking brake firmly.
2. Shift the shift lever into R (Reverse) for manual transaxle or P (Park) for automatic transaxle/ double clutch transmission.
3. Activate the hazard warning flasher.

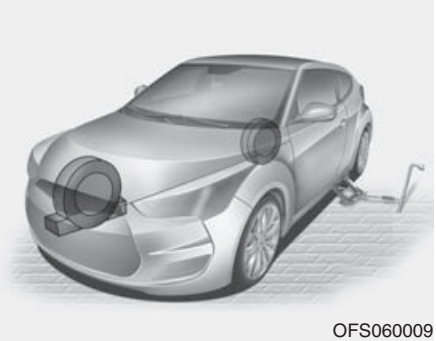
OFS060009

4. Remove the wheel lug nut wrench, jack, jack handle, and spare tire from the vehicle.
5. Block both the front and rear of wheel that is diagonally opposite the jack position.

⚠ WARNING - Changing a tire

- **To prevent vehicle movement while changing a tire, always set the parking brake fully, and always block the wheel diagonally opposite the wheel being changed.**
- **We recommend that the wheels of the vehicle be chocked, and that no person remain in a vehicle that is being jacked.**

OFS062010

6. Loosen the wheel lug nuts counterclockwise one turn each, but do not remove any nut until the tire has been raised off the ground.

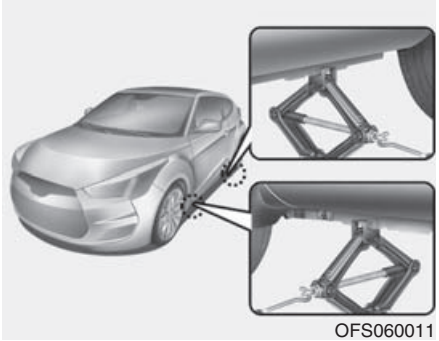
OFS060011

7. Place the jack at the front or rear jacking position closest to the tire you are changing. Place the jack at the designated locations under the frame. The jacking positions are plates welded to the frame with two tabs and a raised dot to index with the jack.

⚠ WARNING - Jack location
To reduce the possibility of injury, be sure to use only the jack provided with the vehicle and in the correct jack position; never use any other part of the vehicle for jack support.

OFS062012

8. Insert the jack handle into the jack and turn it clockwise, raising the vehicle until the tire just clears the ground. This measurement is approximately 30 mm (1.2 in). Before removing the wheel lug nuts, make sure the vehicle is stable and that there is no chance for movement or slippage.

9. Loosen the wheel nuts and remove them with your fingers. Slide the wheel off the studs and lay it flat so it cannot roll away. To put the wheel on the hub, pick up the spare tire, line up the holes with the studs and slide the wheel onto them. If this is difficult, tip the wheel slightly and get the top hole in the wheel lined up with the top stud. Then jiggle the wheel back and forth until the wheel can be slid over the other studs.

⚠ WARNING

- **Wheels may have sharp edges. Handle them carefully to avoid possible severe injury.**
- **Before putting the wheel into place, be sure that there is nothing on the hub or wheel (such as mud, tar, gravel, etc.) that interferes with the wheel from fitting solidly against the hub. If there is, remove it. If the contact of the mounting surface between the wheel and hub is not good, the wheel nuts could come loose and cause the loss of a wheel. Loss of a wheel may result in loss of control of the vehicle. This may cause serious injury or death.**

10. To reinstall the wheel, hold it on the studs, put the wheel nuts on the studs and tighten them finger tight. Jiggle the tire to be sure it is completely seated, then tighten the nuts as much as possible with your fingers again.
11. Lower the vehicle to the ground by turning the wheel nut wrench counterclockwise.

OFS060013

Then position the wrench as shown in the drawing and tighten the wheel nuts. Be sure the socket is seated completely over the nut. Do not stand on the wrench handle or use an extension pipe over the wrench handle. Go around the wheel tightening every nut following the numerical sequence shown in the image until they are all tight. Then double-check each nut for tightness. After changing wheels, we recommend that the system be checked by an authorized HYUNDAI dealer.

Wheel nut tightening torque:

Steel wheel & aluminum alloy wheel:

9~11 kg·m (65~79 lb·ft)

If you have a tire gauge, remove the valve cap and check the air pressure. If the pressure is lower than recommended, drive slowly to the nearest service station and inflate to the correct pressure. If it is too high, adjust it until it is correct. Always reinstall the valve cap after checking or adjusting tire pressure. If the cap is not replaced, air may leak from the tire. If you lose a valve cap, buy another and install it as soon as possible.

After you have changed wheels, always secure the flat tire in its place and return the jack and tools to their proper storage locations.

⚠ CAUTION

Your vehicle has metric threads on the wheel studs and nuts. Make certain during wheel removal that the same nuts that were removed are reinstalled - or, if replaced, that nuts with metric threads and the same chamfer configuration are used. Installation of a non-metric thread nut on a metric stud or vice-versa will not secure the wheel to the hub properly and will damage the stud so that it must be replaced.

Note that most lug nuts do not have metric threads. Be sure to use extreme care in checking for thread style before installing aftermarket lug nuts or wheels. If in doubt, we recommend that you consult an authorized HYUNDAI dealer.

⚠ WARNING - Wheel studs

If the studs are damaged, they may lose their ability to retain the wheel. This could lead to the loss of the wheel and a collision resulting in serious injuries.

To prevent the jack, jack handle, wheel lug nut wrench and spare tire from rattling while the vehicle is in motion, store them properly.

⚠ WARNING - Inadequate spare tire pressure

Check the inflation pressures as soon as possible after installing the spare tire. Adjust it to the specified pressure, if necessary. Refer to “Tires and wheels” in section 8.

Important - use of compact spare tire (if equipped)

Your vehicle is equipped with a compact spare tire. This compact spare tire takes up less space than a regular-size tire. This tire is smaller than a conventional tire and is designed for temporary use only.

⚠ CAUTION

- ***You should drive carefully when the compact spare is in use. The compact spare should be replaced by the proper conventional tire and rim at the first opportunity.***
- ***The operation of this vehicle is not recommended with more than one compact spare tire in use at the same time.***

⚠ WARNING

The compact spare tire is for emergency use only. Do not operate your vehicle on this compact spare at the speed over 80 km/h (50 mph). The original tire should be repaired or replaced as soon as possible to avoid failure of the spare possibly leading to personal injury or death.

The compact spare should be inflated to 420 kPa (60 psi).

✻ NOTICE

Check the inflation pressure after installing the spare tire. Adjust it to the specified pressure, as necessary.

When using a compact spare tire, observe the following precautions:

- Under no circumstances should you exceed 80 km/h (50 mph); a higher speed could damage the tire.
- Ensure that you drive slowly enough to avoid all hazards. Any road hazard, such as a pothole or debris, could seriously damage the compact spare.
- Any continuous road use of this tire could result in tire failure, loss of vehicle control, and possible personal injury.
- Do not exceed the vehicle's maximum load rating or the load-carrying capacity shown on the sidewall of the compact spare tire.
- Avoid driving over obstacles. The compact spare tire diameter is smaller than the diameter of a conventional tire and reduces the ground clearance approximately 25 mm (1 inch), which could result in damage to the vehicle.

- Do not take this vehicle through an automatic car wash while the compact spare tire is installed.
- Do not use tire chains on the compact spare tire. Because of the smaller size, a tire chain will not fit properly. This could damage the vehicle and result in loss of the chain.
- The compact spare tire should not be installed on the front axle if the vehicle must be driven in snow or on ice.
- Do not use the compact spare tire on any other vehicle because this tire has been designed especially for your vehicle.
- The compact spare tire's tread life is shorter than a regular tire. Inspect your compact spare tire regularly and replace worn compact spare tires with the same size and design, mounted on the same wheel.
- The compact spare tire should not be used on any other wheels, nor should standard tires, snow tires, wheel covers or trim rings be used with the compact spare wheel. If such use is attempted, damage to these items or other car components may occur.
- Do not use more than one compact spare tire at a time.
- Do not tow a trailer while the compact spare tire is installed.

Jack label

■ Example

• Type A

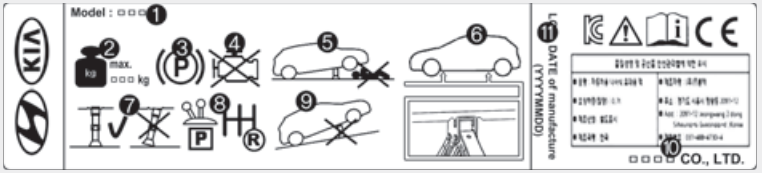

OHYK064001

• Type B

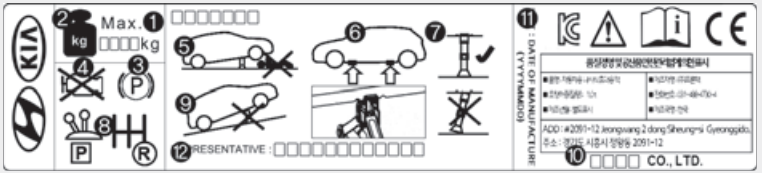

OHYK064005

• Type C

OHYK064002

❊ The actual Jack label in the vehicle may differ from the illustration.
For more detailed specifications, refer to the label attached to the jack.

1. Model Name
2. Maximum allowable load
3. When using the jack, set your parking brake.
4. When using the jack, stop the engine.
5. Do not get under a vehicle that is supported by a jack.
6. The designated locations under the frame
7. When supporting the vehicle, the base plate of jack must be vertical under the lifting point.
8. Shift into Reverse gear on vehicles with manual transaxle or move the shift lever to the P position on vehicles with automatic transaxle.
9. The jack should be used on firm level ground.
10. Jack manufacture
11. Production date
12. Representative company and address

EC Declaration of Conformity for Jack

CE

EC Declaration of Conformity
according to EC Machinery Directive 2006/42/EC

We, **FRONTEC CO., LTD.**
2091-12 Jeongwang 2(i)-dong Siheung-si Gyeonggi-d ,Korea
declare under our sole responsibility that the product

Product : **JACK-ASSY**
Type Designation(s) : **1200KG, 1000KG, 800KG, 700KG, 500KG**
Serial No. : **N/A (prototype)**
Year of Manufacture : **2013**
to which this declaration relates is in conformity with the following standard(s) or other normative document(s);

EN ISO12100 (2010)	Safety of machinery - General principles for design – Risk assessment and risk reduction
EN 1494/A1 (2008)	Mobile or movable jacks and associated lifting equipment

following the provisions of Directive(s);

2006/42/EC	Directive on the approximation of the laws of Member States relating to machinery (OJ L157 Jun, 9, 2006)

Siheung-si Gyeonggi-d ,Korea / 15.07.2013 SOO HONG, MIN President
(Place and date of issue)(Name and signature or equivalent making of authorized person)

* T.C.F Compiling Location:
- Address: PRIBORSKA 280, 739 42 FRYDEK MISTEK,CHLEBOVICE, CZECH REPUBLIC
- Team: Purchase team
- Company name: HANWHA L&C CZECH s.r.o

JACKDOC14F

IF YOU HAVE A FLAT TIRE (WITH TIRE MOBILITY KIT, IF EQUIPPED)

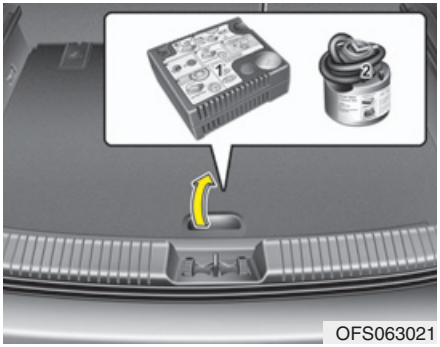

OFS063021

For safe operation, carefully read and follow the instructions in this manual before use.

(1) Compressor

(2) Sealant bottle

The Tire Mobility Kit is a temporary fix to the tire and we recommend that the tire inspected by an authorized HYUNDAI dealer.

⚠ CAUTION - One sealant for one tire

When two or more tires are flat, do not use the tire mobility kit because the supported one sealant of Tire Mobility Kit is only used for one flat tire.

⚠ WARNING - Tire wall

Do not use the Tire Mobility Kit to repair punctures in the tire walls. This can result in an accident due to tire failure.

⚠ WARNING - Temporary fix

Have your tire repaired as soon as possible. The tire may loose air pressure at any time after inflating with the Tire Mobility Kit.

OFS063022

Introduction

With the Tire Mobility Kit you stay mobile even after experiencing a tire puncture.

The system of compressor and sealing compound effectively and comfortably seals most punctures in a passenger car tire caused by nails or similar objects and reinflates the tire.

After you ensured that the tire is properly sealed you can drive cautiously on the tire (distance up to 200 km (120 miles)) at a max. speed of (80 km/h) in order to reach a service station or tire dealer for the tire replacement.

It is possible that some tires, especially with larger punctures or damage to the sidewall, cannot be sealed completely.

Air pressure loss in the tire may adversely affect tire performance.

For this reason, you should avoid abrupt steering or other driving maneuvers, especially if the vehicle is heavily loaded or if a trailer is in use.

The Tire Mobility Kit is not designed or intended as a permanent tire repair method and is to be used for one tire only.

This instruction shows you step by step how to temporarily seal the puncture simply and reliably.

Read the section "Notes on the safe use of the Tire Mobility Kit".

Notes on the safe use of the Tire Mobility Kit

- Park your car at the side of the road so that you can work with the Tire Mobility Kit away from moving traffic.
- To be sure your vehicle will not move, even when you're on fairly level ground, always set your parking brake.
- Only use the Tire Mobility Kit for sealing/inflation passenger car tires. Only punctured areas located within the tread region of the tire can be sealed using the tire mobility kit.
- Do not use on motorcycles, bicycles or any other type of tires.
- When the tire and wheel are damaged, do not use Tire Mobility Kit for your safety.
- Use of the Tire Mobility Kit may not be effective for tire damage larger than approximately 0.24 in (6 mm).

  We recommend that you contact an authorized HYUNDAI dealer.
- Do not use the Tire Mobility Kit if a tire is severely damaged by driving run flat or with insufficient air pressure.
- Do not remove any foreign objects such as nails or screws that have penetrated the tire.
- Provided the car is outdoors, leave the engine running. Otherwise operating the compressor may eventually drain the car battery.
- Never leave the Tire Mobility Kit unattended while it is being used.
- Do not leave the compressor running for more than 10 min. at a time or it may overheat.
- Do not use the Tire Mobility Kit if the ambient temperature is below -22°F (-30°C).

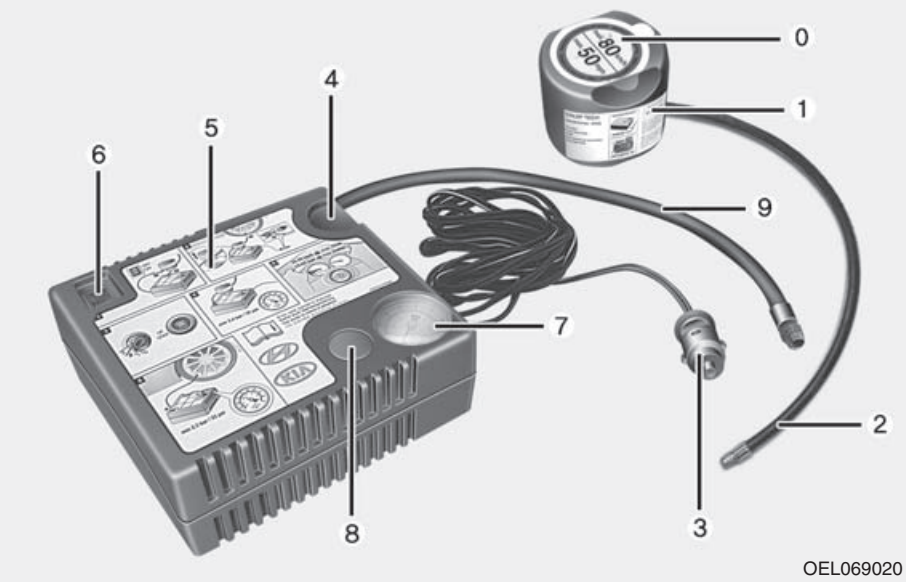

Components of the Tire Mobility Kit

0. Speed restriction label
1. Sealant bottle and label with speed restriction
2. Filling hose from sealant bottle to wheel
3. Connectors and cable for the power outlet direct connection
4. Holder for the sealant bottle
5. Compressor
6. On/off switch
7. Pressure gauge for displaying the tire inflation pressure
8. Button for reducing tire inflation pressure
9. Hose to connect compressor and sealant bottle or compressor and wheel

Connectors, cable and connection hose are stored in the compressor housing.

⚠ WARNING - Expired sealant

Do not use the Tire sealant after the sealant has expired (i.e. pasted the expiration date on the sealant container). This can increase the risk of tire failure.

⚠ WARNING - Sealant

- **Keep out of reach of children.**
- **Avoid contact with eyes.**
- **Do not swallow.**

Strictly follow the specified sequence, otherwise the sealant may escape under high pressure.

Using the Tire Mobility Kit

1. Detach the speed restriction label (0) from the sealant bottle (1), and place it in a highly visible place inside the vehicle such as on the steering wheel to remind the driver not to drive too fast.
2. Screw connection hose (9) onto the connector of the sealant bottle.
3. Ensure that button (8) on the compressor is not pressed.
4. Unscrew the valve cap from the valve of the defective wheel and screw filling hose (2) of the sealant bottle onto the valve.
5. Insert the sealant bottle into the housing (4) of the compressor so that the bottle is upright.

OFS063022

6. Ensure that the compressor is switched off, position 0.
7. Plug the compressor power cord into the vehicle power outlet.
8. With the engine start/stop button position on or ignition switch position on, switch on the compressor and let it run for approximately 5~7 minutes to fill the sealant up to proper pressure. (refer to the Tire and Wheels, chapter 8). The inflation pressure of the tire after filling is unimportant and will be checked/corrected later.

   Be careful not to overinflate the tire and stay away from the tire when filling it.

⚠ CAUTION - Tire pressure

Do not attempt to drive your vehicle if the tire pressure is below 29 PSI(200kpa). This could result in an accident due to sudden tire failure.

9. Switch off the compressor.
10. Detach the hoses from the sealant bottle connector and from the tire valve.

Return the Tire Mobility Kit to its storage location in the vehicle.

⚠ WARNING - Carbon monoxide

Do not leave your vehicle running in a poorly ventilated area for extended periods of time. Carbon monoxide poisoning and suffocation can occur.

Distributing the sealant

11. Immediately drive approximately 4~6miles (7~10km or, about 10min) to evenly distribute the sealant in the tire.

Do not exceed a speed of 50 mph (80 km/h). If possible, do not fall below a speed of 12 mph (20 km/h).

While driving, if you experience any unusual vibration, ride disturbance or noise, reduce your speed and drive with caution until you can safely pull off of the side of the road.

Call for road side service or towing.

When you use the Tire Mobility Kit, the tire pressure sensors and wheel may be damaged by sealant, remove the sealant stained with tire pressure sensors and wheel and inspect in authorized dealer.

Checking the tire inflation pressure

1. After driving approximately 4 ~6miles(7~10km or about 10min), stop at a safety location.
2. Connect connection hose (9) of the compressor directly to the tire valve.
3. Plug the compressor power cord into the vehicle power outlet.
4. Adjust the tire inflation pressure to the recommended tire inflation.

   With the ignition switched on, proceed as follows.

   - **To increase the inflation pressure :** Switch on the compressor, position I. To check the current inflation pressure setting, briefly switch off the compressor.

✻ NOTICE

The pressure gauge may show higher than actual reading when the compressor is running. To get an accurate tire pressure, the compressor needs to be turned off.

- **To reduce the inflation pressure:** Press the button (8) on the compressor.

⚠ **CAUTION - Tire pressure sensor**

We recommend that you use the sealant of tire mobility kit from an authorized HYUNDAI dealer. The sealant on the tire pressure sensor and wheel should be removed when you replace the tire with a new one and inspect the tire pressure sensors in authorized dealer.

Technical Data

System voltage: DC 12 V
Working voltage: DC 10 - 15 V
Amperage rating: max. 15 A
Suitable for use at temperatures:
-30 ~ +70°C (-22 ~ +158°F)
Max. working pressure:
6 bar (87 psi)
Size
Compressor: 168 x 150 x 68 mm
(6.6 x 5.9 x 2.7 in.)
Sealant bottle: 77 x 85 ø mm
(3.0 x 3.3 ø in.)
Compressor weight:
1.05 kg (2.31 lbs)
Sealant volume:
200 ml (12.2 cu. in.)

TIRE PRESSURE MONITORING SYSTEM (TPMS, IF EQUIPPED)

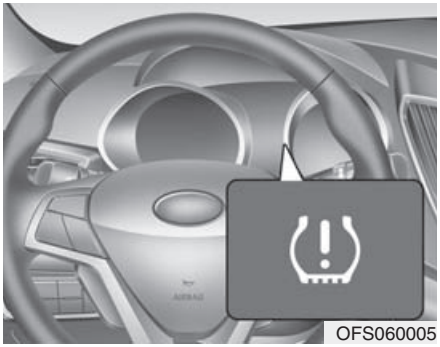

Low tire pressure telltale /
TPMS malfunction indicator

Each tire, including the spare (if provided), should be checked monthly when cold and inflated to the inflation pressure recommended by the vehicle manufacturer on the vehicle placard or tire inflation pressure label. (If your vehicle has tires of a different size than the size indicated on the vehicle placard or tire inflation pressure label, you should determine the proper tire inflation pressure for those tires.)

As an added safety feature, your vehicle has been equipped with a tire pressure monitoring system (TPMS) that illuminates a low tire pressure telltale when one or more of your tires is significantly under-inflated. Accordingly, when the low tire pressure telltale illuminates, you should stop and check your tires as soon as possible, and inflate them to the proper pressure. Driving on a significantly under-inflated tire causes the tire to overheat and can lead to tire failure. Under-inflation also reduces fuel efficiency and tire tread life, and may affect the vehicle's handling and stopping ability.

Please note that the TPMS is not a substitute for proper tire maintenance, and it is the driver's responsibility to maintain correct tire pressure, even if under-inflation has not reached the level to trigger illumination of the TPMS low tire pressure telltale.

Your vehicle has also been equipped with a TPMS malfunction indicator to indicate when the system is not operating properly. The TPMS malfunction indicator is combined with the low tire pressure telltale. When the system detects a malfunction, the telltale will flash for approximately one minute and then remain continuously illuminated. This sequence will continue upon subsequent vehicle start-ups as long as the malfunction exists. When the malfunction indicator is illuminated, the system may not be able to detect or signal low tire pressure as intended. TPMS malfunctions may occur for a variety of reasons, including the installation of replacement or alternate tires or wheels on the vehicle that prevent the TPMS from functioning properly. Always check the TPMS malfunction telltale after replacing one or more tires or wheels on your vehicle to ensure that the replacement or alternate tires and wheels allow the TPMS to continue to function properly.

✻ NOTICE

If the TPMS indicator does not illuminate for 3 seconds when the ignition switch is turned to the ON position or engine is running, or if it comes on after blinking for approximately one minute, we recommend that you contact an authorized HYUNDAI dealer.

Low tire pressure telltale

When the tire pressure monitoring system warning indicator is illuminated, one or more of your tires is significantly under-inflated.

If the telltale illuminates, immediately reduce your speed, avoid hard cornering and anticipate increased stopping distances. You should stop and check your tires as soon as possible. Inflate the tires to the proper pressure as indicated on the vehicle's placard or tire inflation pressure label located on the driver's side center pillar outer panel. If you cannot reach a service station or if the tire cannot hold the newly added air, replace the low pressure tire with the spare tire.

Then the Low Tire Pressure telltale may flash for approximately one minute and then remain continuously illuminated after restarting and about 20 minutes of continuous driving before you have the low pressure tire repaired and replaced on the vehicle.

⚠ CAUTION

In winter or cold weather, the low tire pressure telltale may be illuminated if the tire pressure was adjusted to the recommended tire inflation pressure in warm weather. It does not mean your TPMS is malfunctioning because the decreased temperature leads to a proportional lowering of tire pressure.

When you drive your vehicle from a warm area to a cold area or from a cold area to a warm area, or the outside temperature is greatly higher or lower, you should check the tire inflation pressure and adjust the tires to the recommended tire inflation pressure.

⚠ WARNING - Low pressure damage

Significantly low tire pressure makes the vehicle unstable and can contribute to loss of vehicle control and increased braking distances.

Continued driving on low pressure tires can cause the tires to overheat and fail.

TPMS (Tire Pressure Monitoring System) malfunction indicator

The TPMS malfunction indicator will illuminate after it blinks for approximately one minute when there is a problem with the Tire Pressure Monitoring System. If the system is able to correctly detect an under inflation warning at the same time as system failure then it will illuminate the TPMS malfunction indicator.

We recommend that the system be checked by an authorized HYUNDAI dealer.

⚠ CAUTION

- ***The TPMS malfunction indicator may be illuminated if the vehicle is moving around electric power supply cables or radios transmitter such as at police stations, government and public offices, broadcasting stations, military installations, airports, or transmitting towers, etc. This can interfere with normal operation of the Tire Pressure Monitoring System (TPMS).***
- ***The TPMS malfunction indicator may illuminate if snow chains or some separately purchased devices such as notebook computers, mobile charger, remote starter, navigation etc. are used in the vehicle. This can interfere with normal operation of the Tire Pressure Monitoring System (TPMS).***

Changing a tire with TPMS

If you have a flat tire, the Low Tire Pressure will come on. We recommend that the flat tire be checked by an authorized HYUNDAI dealer.

⚠ CAUTION

We recommend that you use a puncture-repairing agent approved by HYUNDAI.

The sealant on the tire pressure sensor and wheel shall be eleminated when you replace the tire with a new one.

Each wheel is equipped with a tire pressure sensor mounted inside the tire behind the valve stem. You must use TPMS specific wheels. It is recommended that you have your tires serviced by an authorized HYUNDAI dealer.

Even if you replace the low pressure tire with the spare tire, the Low Tire Pressure Telltale will blink or remain on until the low pressure tire is repaired and placed on the vehicle.

After you replace the low pressure tire with the spare tire, the Low Tire Pressure Telltale may blink or illuminate after a few minutes because the TPMS sensor mounted on the spare wheel is not initiated.

Once the low pressure tire is reinflated to the recommended pressure and installed on the vehicle or we recommend that the TPMS sensor mounted on the replaced spare wheel be initiated by an authorized HYUNDAI dealer, the TPMS malfunction indicator and the low tire pressure telltale will extinguish within a few minutes of driving.

If the indicator is not extinguished after a few minutes of driving, We recommend that the system be checked by an authorized HYUNDAI dealer.

⚠ CAUTION

If original mounted tire is replaced with the spare tire, the TPMS sensor on the replaced spare wheel should be initiated and we recomment that the TPMS sensor on the original mounted wheel be deactivated by a HYUNDAI dealer. If the TPMS sensor on the original mounted wheel located in the spare tire carrier still activates, the tire pressure monitoring system may not operate properly. We recommend that the system be serviced by an authorized HYUNDAI dealer.

You may not be able to identify a low tire by simply looking at it. Always use a good quality tire pressure gauge to measure the tire's inflation pressure. Please note that a tire that is hot (from being driven) will have a higher pressure measurement than a tire that is cold.

A cold tire means the vehicle has been sitting for 3 hours and driven for less than 1 mile (1.6 km) in that 3 hour period.

Allow the tire to cool before measuring the inflation pressure. Always be sure the tire is cold before inflating to the recommended pressure.

⚠ CAUTION

We recommend that you use the tire sealant approved by HYUNDAI if your vehicle is equipped with a Tire Pressure Monitoring System. The liquid sealant can damage the tire pressure sensors.

⚠ WARNING - TPMS

- **The TPMS cannot alert you to severe and sudden tire damage caused by external factors such as nails or road debris.**
- **If you feel any vehicle instability, immediately take your foot off the accelerator, apply the brakes gradually and with light force, and slowly move to a safe position off the road.**

⚠ WARNING - Protecting TPMS

Tampering with, modifying, or disabling the Tire Pressure Monitoring System (TPMS) components may interfere with the system's ability to warn the driver of low tire pressure conditions and/or TPMS malfunctions. Tampering with, modifying, or disabling the Tire Pressure Monitoring System (TPMS) components may void the warranty for that portion of the vehicle.

⚠ WARNING - For EUROPE

- **Do not modify the vehicle, it may interfere with the TPMS function.**
- **The wheels on the market do not have a TPMS sensor.**

  For your safety, we recommend that you use parts for replacement from an authorized HYUNDAI dealer.
- **If you use the wheels on the market, use a TPMS sensor approved by a HYUNDAI dealer. If your vehicle is not equipped with a TPMS sensor or TPMS does not work properly, you may fail the periodic vehicle inspection conducted in your country.**

❋ All vehicles sold in the EUROPE market during below period must be equipped with TPMS.

- New model vehicle : Nov. 1, 2012 ~

- Current model vehicle : Nov. 1, 2014~ (Based on vehicle registrations)

TOWING

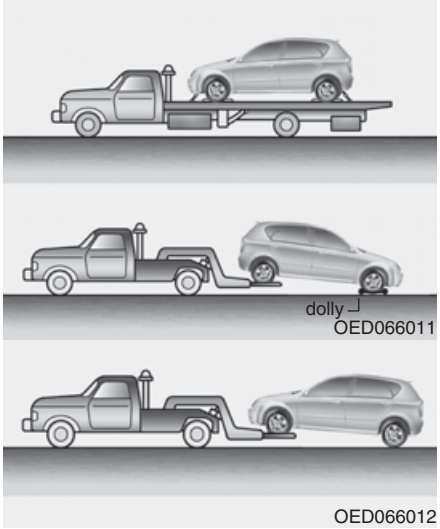

Towing service

If emergency towing is necessary, we recommend having it done by an authorized HYUNDAI dealer or a commercial tow-truck service. Proper lifting and towing procedures are necessary to prevent damage to the vehicle. The use of wheel dollies or flatbed is recommended.

It is acceptable to tow the vehicle with the rear wheels on the ground (without dollies) and the front wheels off the ground.

If any of the loaded wheels or suspension components are damaged or the vehicle is being towed with the front wheels on the ground, use a towing dolly under the front wheels.

When being towed by a commercial tow truck and wheel dollies are not used, the front of the vehicle should always be lifted, not the rear.

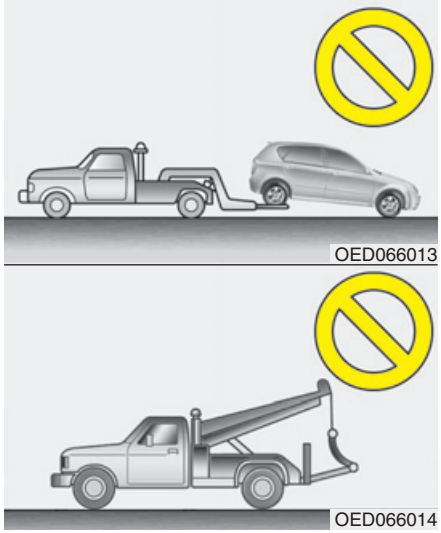

⚠ CAUTION

- ***Do not tow the vehicle backwards with the front wheels on the ground as this may cause damage to the vehicle.***
- ***Do not tow with sling-type equipment. Use wheel lift or flatbed equipment.***

When towing your vehicle in an emergency without wheel dollies :

1. Set the ignition switch in the ACC position.
2. Place the transaxle shift lever in N (Neutral).
3. Release the parking brake.

⚠ CAUTION

- ***Failure to place the transaxle shift lever in N (Neutral) may cause internal damage to the transaxle.***
- ***Do not tow the vehicle at a higher speed than 50 km/h.***

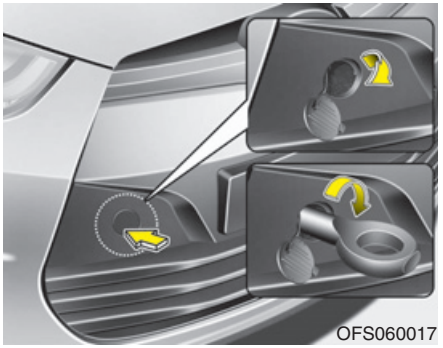

Removable towing hook (front) (if equipped)

1. Open the tailgate, and remove the towing hook from the tool case.
2. Remove the hole cover pressing the lower part of the cover on the front bumper.
3. Install the towing hook by turning it clockwise into the hole until it is fully secured.
4. Remove the towing hook and install the cover after use.

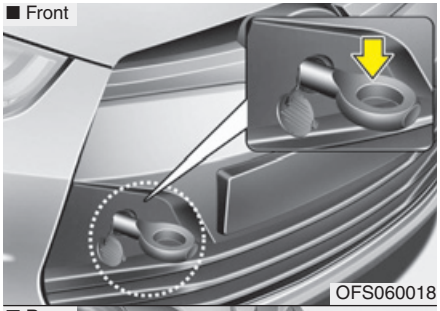

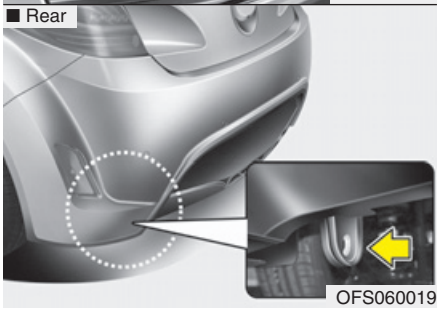

Emergency towing

If towing is necessary, we recommend you to have it done by an authorized HYUNDAI dealer or a commercial tow truck service.

If towing service is not available in an emergency, your vehicle may be temporarily towed using a cable or chain secured to the emergency towing hook under the front (or rear) of the vehicle. Use extreme caution when towing the vehicle. A driver must be in the vehicle to steer it and operate the brakes.

Towing in this manner may be done only on hard-surfaced roads for a short distance and at low speed. Also, the wheels, axles, power train, steering and brakes must all be in good condition.

- Do not use the tow hooks to pull a vehicle out of mud, sand or other conditions from which the vehicle cannot be driven out under its own power.
- Avoid towing a vehicle heavier than the vehicle doing the towing.
- The drivers of both vehicles should communicate with each other frequently.

⚠ CAUTION

- ***Attach a towing strap to the tow hook.***
- ***Using a portion of the vehicle other than the tow hooks for towing may damage the body of your vehicle.***
- ***Use only a cable or chain specifically intended for use in towing vehicles. Securely fasten the cable or chain to the towing hook provided.***

- Before emergency towing, check if the hook is not broken or damaged.
- Fasten the towing cable or chain securely to the hook.
- Do not jerk the hook. Apply it steadily and with even force.
- To avoid damaging the hook, do not pull from the side or at a vertical angle. Always pull straight ahead.

⚠ WARNING

Use extreme caution when towing the vehicle.

- **Avoid sudden starts or erratic driving maneuvers which would place excessive stress on the emergency towing hook and towing cable or chain. The hook and towing cable or chain may break and cause serious injury or damage.**
- **If the disabled vehicle is unable to move, do not forcibly continue the towing. Contact an authorized HYUNDAI dealer or a commercial tow truck service for assistance.**
- **Tow the vehicle as straight ahead as possible.**
- **Keep away from the vehicle during towing.**

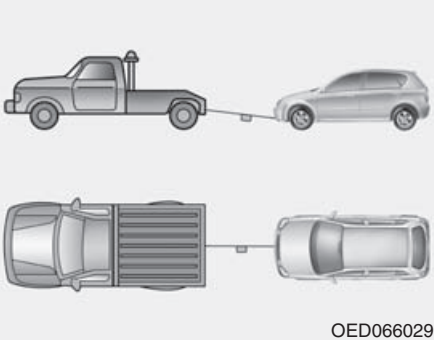

OED066029

- Use a towing strap less than 5 m (16 feet) long. Attach a white or red cloth (about 30 cm (12 inches) wide) in the middle of the strap for easy visibility.
- Drive carefully so that the towing strap is not loosened during towing.

Emergency towing precautions

- Turn the ignition switch to ACC so the steering wheel isn't locked.
- Place the transaxle shift lever in N (Neutral).
- Release the parking bake.
- Press the brake pedal with more force than normal since you will have reduced brake performance.
- More steering effort will be required because the power steering system will be disabled.
- If you are driving down a long hill, the brakes may overheat and brake performance will be reduced. Stop often and let the brakes cool off.

CAUTION - Automatic transaxle/Double clutch transmission

- *If the car is being towed with all four wheels on the ground, it can be towed only from the front. Be sure that the transaxle is in neutral. Be sure the steering is unlocked by placing the ignition switch in the ACC position. A driver must be in the towed vehicle to operate the steering and brakes.*
- *To avoid serious damage to the automatic transaxle, limit the vehicle speed to 15 km/h (10 mph) and drive less than 1.5 km (1 mile) when towing.*

Tie-down hook (for flatbed towing, if equipped)

WARNING

Do not use the tie-down hooks under the front (or rear) of the vehicle for towing purposes. These hooks are designed ONLY for transport tie-down. If the tie-down hooks are used for towing, the tie-down hooks or front (or rear) bumper will be damaged and this could lead to serious injury.

EMERGENCY COMMODITY (IF EQUIPPED)

There are some emergency commodities in the vehicle to help you respond to the emergency situation.

Fire extinguisher

If there is small fire and you know how to use the fire extinguisher, take the following steps carefully.

1. Pull the pin at the top of the extinguisher that keeps the handle from being accidentally pressed.
2. Aim the nozzle toward the base of the fire.
3. Stand approximately 2.5 m (8 ft) away from the fire and squeeze the handle to discharge the extinguisher. If you release the handle, the discharge will stop.
4. Sweep the nozzle back and forth at the base of the fire. After the fire appears to be out, watch it carefully since it may re-ignite.

First aid kit

There are some items such as scissors, bandage and adhesive tape and etc. in the kit to give first aid to an injured person.

Triangle reflector

Place the triangle reflector on the road to warn oncoming vehicles during emergencies, such as when the vehicle is parked by the roadside due to any problems.

Tire pressure gauge (If equipped)

Tires normally lose some air in day-to-day use, and you may have to add a few pounds of air periodically and it is not usually a sign of a leaking tire, but of normal wear. Always check tire pressure when the tires are cold because tire pressure increases with temperature.

To check the tire pressure, take the following steps;

1. Unscrew the inflation valve cap that is located on the rim of the tire.
2. Press and hold the gauge against the tire valve. Some air will escape as you begin and more will escape if you don't press the gauge in firmly.
3. A firm non-leaking push will activate the gauge.
4. Read the tire pressure on the gauge to know whether the tire pressure is low or high.
5. Adjust the tire pressures to the specified pressure. Refer to “Tires and wheels” in section 8.
6. Reinstall the inflation valve cap.

Engine compartment / 7-2
Maintenance services / 7-4
Owner maintenance / 7-6
Scheduled maintenance service / 7-8
Explanation of scheduled maintenance items / 7-31
Engine oil / 7-35
Engine coolant / 7-37
Brake/clutch fluid / 7-40
Washer fluid / 7-41
Parking brake / 7-41
Air cleaner / 7-42
Climate control air filter / 7-43
Wiper blades / 7-45
Battery / 7-49
Tires and wheels / 7-53
Fuses / 7-64

Maintenance

7

Light bulbs / 7-77
Appearance care / 7-90
Emission control system / 7-96

ENGINE COMPARTMENT

■ Gasoline 1.6 GDI

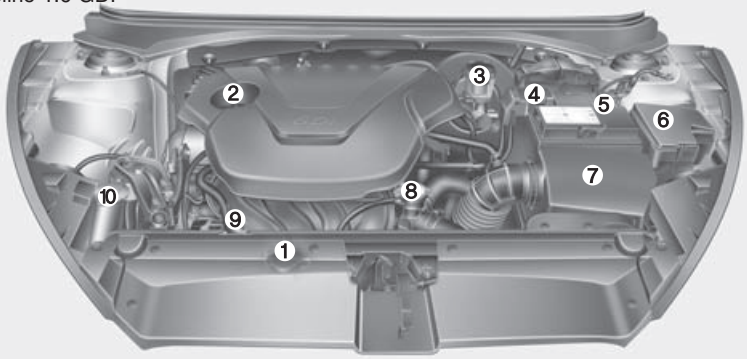

■ Gasoline 1.6 MPI

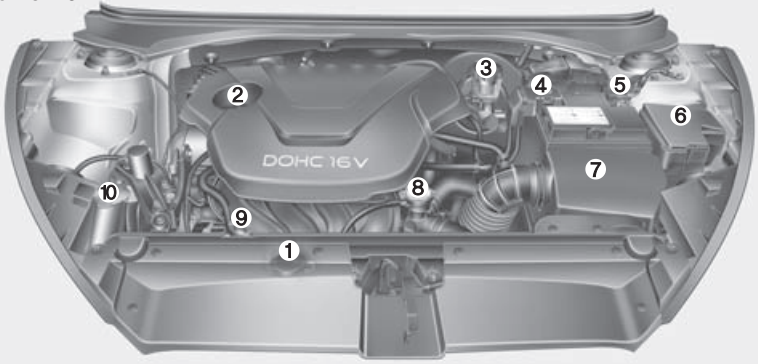

1. Engine coolant reservoir
2. Engine oil filler cap
3. Brake/clutch* fluid reservoir
4. Positive battery terminal
5. Negative battery terminal
6. Fuse box
7. Air cleaner
8. Radiator cap
9. Engine oil dipstick
10. Windshield washer fluid reservoir

* : if equipped

* The actual engine room including engine cover in the vehicle may differ from the illustration.

OFS011003/OFS012004L

■ Gasoline 1.6 T-GDI

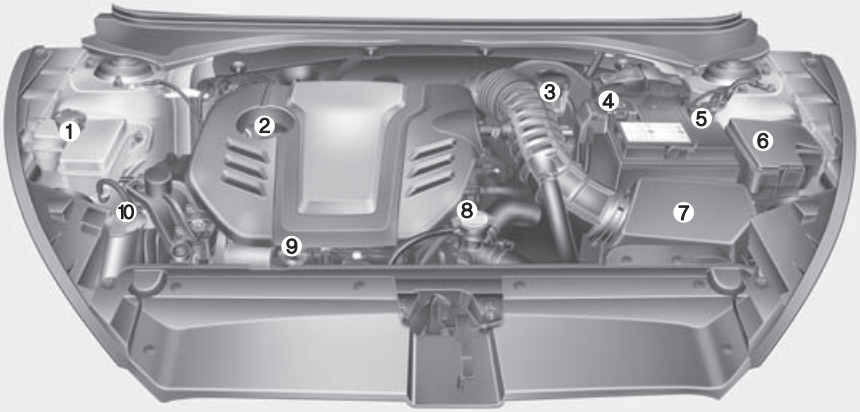

1. Engine coolant reservoir
2. Engine oil filler cap
3. Brake/clutch* fluid reservoir
4. Positive battery terminal
5. Negative battery terminal
6. Fuse box
7. Air cleaner
8. Radiator cap
9. Engine oil dipstick
10. Windshield washer fluid reservoir

* : if equipped

* The actual engine room including engine cover in the vehicle may differ from the illustration.

OFS012004

MAINTENANCE SERVICES

You should exercise the utmost care to prevent damage to your vehicle and injury to yourself whenever performing any maintenance or inspection procedures.

Inadequate, incomplete or insufficient servicing may result in operational problems with your vehicle that could lead to vehicle damage, an accident, or personal injury.

Owner’s responsibility

✻ NOTICE

Maintenance Service and Record Retention are the owner's responsibility.

We recommend in general that you have your vehicle serviced by an authorized HYUNDAI dealer.

You should retain documents that show proper maintenance has been performed on your vehicle in accordance with the scheduled maintenance service charts shown on the following pages. You need this information to establish your compliance with the servicing and maintenance requirements of your vehicle warranties.

Detailed warranty information is provided in your Service Passport.

Repairs and adjustments required as a result of improper maintenance or a lack of required maintenance are not covered when your vehicle is covered by warranty.

Owner maintenance precautions

Improper or incomplete service may result in problems. This section gives instructions only for the maintenance items that are easy to perform.

✻ NOTICE

Improper owner maintenance during the warranty period may affect warranty coverage. For details, read the separate Service Passport provided with the vehicle. If you're unsure about any servicing or maintenance procedure, we recommend that the system be seviced by an authorized HYUNDAIdealer.

⚠ WARNING - Maintenance work

- **Performing maintenance work on a vehicle can be dangerous. You can be seriously injured while performing some maintenance procedures. If you lack sufficient knowledge and experience or the proper tools and equipment to do the work, we recommend that the system be servied by an authorized HYUNDAIdealer.**
- **Working under the hood with the engine running is dangerous. It becomes even more dangerous when you wear jewelry or loose clothing. These can become entangled in moving parts and result in injury. Therefore, if you must run the engine while working under the hood, make certain that you remove all jewelry (especially rings, bracelets, watches, and necklaces) and all neckties, scarves, and similar loose clothing before getting near the engine or cooling fans.**

⚠ CAUTION

- ***Do not put heavy objects or apply excessive force on top of the engine cover (if equipped) or fuel related parts.***
- ***When you inspect the fuel system (fuel lines and fuel injection devices), we recommend that you contact an authorized HYUNDAI dealer.***
- ***Do not drive long time with the engine cover (if equipped) removed.***
- ***When checking the engine room, do not go near fire.***

  Fuel, washer fluid, etc. are flammable oils that may cause fire.
- ***Before touching the battery, ignition cables and electrical wiring, you should disconnect the battery "-" terminal. You may get an electric shock from the electric current.***
- ***When you remove the interior trim cover with a flat bed (-) driver, be careful not to damage the cover.***
- ***Be careful when you replace and clean bulbs to avoid burns or electrical shock.***

OWNER MAINTENANCE

The following lists are vehicle checks and inspections that should be performed at the frequencies indicated to help ensure safe, dependable operation of your vehicle.

Any adverse conditions should be brought to the attention of your dealer as soon as possible.

These Owner Maintenance Checks are generally not covered by warranties and you may be charged for labor, parts and lubricants used.

Owner maintenance schedule

When you stop for fuel:

- Check the engine oil level.
- Check the coolant level in coolant reservoir.
- Check the windshield washer fluid level.
- Look for low or under-inflated tires.

⚠ WARNING

Be careful when checking your engine coolant level when the engine is hot. Scalding hot coolant and steam may blow out under pressure. This could cause burns or other serious injury.

While operating your vehicle:

- Note any changes in the sound of the exhaust or any smell of exhaust fumes in the vehicle.
- Check for vibrations in the steering wheel. Notice any increased steering effort or looseness in the steering wheel, or change in its straight-ahead position.
- Notice if your vehicle constantly turns slightly or “pulls” to one side when traveling on smooth, level road.
- When stopping, listen and check for unusual sounds, pulling to one side, increased brake pedal travel or “hard-to-push” brake pedal.
- If any slipping or changes in the operation of your transaxle occurs, check the transaxle fluid level.
- Check automatic transaxle/double clutch transmission P (Park) function.
- Check the parking brake.
- Check for fluid leaks under your vehicle (water dripping from the air conditioning system during or after use is normal).

At least monthly:

- Check the coolant level in the engine coolant reservoir.
- Check the operation of all exterior lights, including the stoplights, turn signals and hazard warning flashers.
- Check the inflation pressures of all tires including the spare.

At least twice a year (i.e., every Spring and Fall):

- Check the radiator, heater and air conditioning hoses for leaks or damage.
- Check the windshield washer spray and wiper operation. Clean wiper blades with clean cloth dampened with washer fluid.
- Check the headlight alignment.
- Check the muffler, exhaust pipes, shields and clamps.
- Check the lap/shoulder belts for wear and function.
- Check for worn tires and loose wheel lug nuts.

At least once a year:

- Clean the body and door drain holes.
- Lubricate the door hinges and checks, and hood hinges.
- Lubricate the door and hood locks and latches.
- Lubricate the door rubber weatherstrips.
- Check the air conditioning system.
- Inspect and lubricate automatic transaxle linkage and controls.
- Clean the battery and terminals.
- Check the brake/clutch fluid level.

SCHEDULED MAINTENANCE SERVICE

Follow the Normal Maintenance Schedule if the vehicle is usually operated where none of the following conditions apply. If any of the following conditions apply, follow Maintenance Under Severe Usage Conditions.

- Repeated short distance driving.
- Driving in dusty conditions or sandy areas.
- Extensive use of brakes.
- Driving in areas where salt or other corrosive materials are being used.
- Driving on rough or muddy roads.
- Driving in mountainous areas.
- Extended periods of idling or low speed operation.
- Driving for a prolonged period in cold temperatures and/or extremely humid climates.
- More than 50% driving in heavy city traffic during hot weather above 32°C (90°F).

If your vehicle is operated under the above conditions, you should inspect, replace or refill more frequently than the following Normal Maintenance Schedule. After the periods or distance shown in the chart, continue to follow the prescribed maintenance intervals.

NORMAL MAINTENANCE SCHEDULE - FOR EUROPE

The following maintenance services must be performed to ensure good emission control and performance. Keep receipts for all vehicle emission services to protect your warranty. Where both mileage and time are shown, the frequency of service is determined by whichever occurs first.

** : The engine oil level should be checked regularly and maintained properly. Operating with an insufficient amount of oil can damage the engine, and such damage is not covered by warranty.

*1 : Adjust alternator and power steering (and water pump drive belt) and air conditioner drive belt (if equipped). Inspect and if necessary correct or replace.

*2 : Check the engine oil level and leak every 500 km (350 miles) or before starting a long trip.

*3 : For your convenience, it can be replaced prior to it's interval when you do maintenance of other items.

*4 : Inspect for excessive valve noise and/or engine vibration and adjust if necessary. We recommend that the system be checked by an authorized HYUNDAI dealer.

*5 : For your convenience, it can be replaced prior to it's interval when you do maintenance of other items.

*6 : Fuel filter is considered to be maintenance free but periodic inspection is recommended for this maintenance schedule depends on fuel quality. If there are some important matters like fuel flow restriction, surging, loss of power, hard starting problem etc, replace the fuel filter immediately regardless of maintenance schedule and we recommend that you consult an authorized HYUNDAI dealer for details.

*7 : When adding coolant, use only deionized water or soft water for your vehicle and never mix hard water in the coolant filled at the factory. An improper coolant mixture can result in serious malfunction or engine damage.

*8 : For your convenience, it can be replaced prior to it's interval when you do maintenance of other items.

NORMAL MAINTENANCE SCHEDULE - FOR EUROPE (CONT.)

MAINTENANCE INTERVALS / MAINTENANCE ITEM		Number of months or driving distance, whichever comes first							
	Months	**12**	**24**	**36**	**48**	**60**	**72**	**84**	**96**
	Miles×1,000	**10**	**20**	**30**	**40**	**50**	**60**	**70**	**80**
	Km×1,000	**15**	**30**	**45**	**60**	**75**	**90**	**105**	**120**
Drive belts *1		At first, inspect at 90,000km (60,000 miles) or 36 months, after that, every 30,000km (20,000 miles)							
Engine oil and engine oil filter *2, **	T-GDI	R	R	R	R	R	R	R	R
	GDI	Replace every 30,000 km (20,000 miles) or 12 months							
	MPI	R	R	R	R	R	R	R	R
Air cleaner filter	T-GDI	I	I	R	I	I	R	I	I
	GDI	Inspect every 30,000 km (20,000 miles) or 12 months							
		Replace every 60,000 km (40,000 miles) or 24 months							
	MPI	I	I	I	I	I	I	I	I
Spark plugs	T-GDI	Replace every 75,000 km (59,000 miles) or 60 months *3							
	GDI	Replace every 150,000 km (100,000 miles) or 120 months							
	MPI				R				R
Fuel additives		A	A	A	A	A	A	A	A

I : Inspect and if necessary, adjust, correct, clean or replace.
R : Replace or change.
A : Add

NORMAL MAINTENANCE SCHEDULE - FOR EUROPE (CONT.)

MAINTENANCE ITEM \ MAINTENANCE INTERVALS		Number of months or driving distance, whichever comes first							
	Months	12	24	36	48	60	72	84	96
	Miles×1,000	10	20	30	40	50	60	70	80
	Km×1,000	15	30	45	60	75	90	105	120
Intercooler, in/out hose, air intake hose	T-GDI	I	I	I	I	I	I	I	I
Valve clearance *4							I		
Vapor hose and fuel filler cap					I				I
Fuel tank air filter					I				I
Vacuum and crankcase ventilation hoses				I			I		
Vacuum hose		I	I	I	I	I	I	I	I
Exhaust system	T-GDI	I	I	I	I	I	I	I	I
	GDI	Inspect every 30,000 km (20,000 miles) or 12 months							
	MPI	I	I	I	I	I	I	I	I

I : Inspect and if necessary, adjust, correct, clean or replace.

R : Replace or change.

NORMAL MAINTENANCE SCHEDULE - FOR EUROPE (CONT.)

MAINTENANCE ITEM \ MAINTENANCE INTERVALS		Number of months or driving distance, whichever comes first							
	Months	12	24	36	48	60	72	84	96
	Miles×1,000	10	20	30	40	50	60	70	80
	Km×1,000	15	30	45	60	75	90	105	120
Fuel filter *6					I				I
Fuel lines, hoses and connections					I				I
Cooling system		At first, inspect at 60,000km (40,000 miles) or 48 months : After that, inspect every 30,000km (20,000 miles) or 24 months							
Engine coolant *7		At first, replace at 210,000 km (120,000 miles) or 120 months: after that, replace every 30,000 km (20,000 miles) or 24 months *8							
Battery condition	T-GDI	I	I	I	I	I	I	I	I
	GDI	Inspect every 30,000 km (20,000 miles) or 12 months							
	MPI	I	I	I	I	I	I	I	I

I : Inspect and if necessary, adjust, correct, clean or replace.
R : Replace or change.

NORMAL MAINTENANCE SCHEDULE - FOR EUROPE (CONT.)

MAINTENANCE INTERVALS / MAINTENANCE ITEM		Number of months or driving distance, whichever comes first							
	Months	12	24	36	48	60	72	84	96
	Miles×1,000	10	20	30	40	50	60	70	80
	Km×1,000	15	30	45	60	75	90	105	120
All electrical systems		Inspect every 30,000 km (20,000 miles) or 12 months							
Brake lines, hoses and connections	T-GDI	I	I	I	I	I	I	I	I
	GDI	Inspect every 30,000 km (20,000 miles) or 12 months							
	MPI	I	I	I	I	I	I	I	I
Brake pedal, clutch pedal (if equipped)	T-GDI	I	I	I	I	I	I	I	I
	GDI	Inspect every 30,000 km (20,000 miles) or 12 months							
	MPI	I	I	I	I	I	I	I	I
Parking brake	T-GDI	I	I	I	I	I	I	I	I
	GDI	Inspect every 30,000 km (20,000 miles) or 12 months							
	MPI		I		I		I		I

I : Inspect and if necessary, adjust, correct, clean or replace.
R : Replace or change.

NORMAL MAINTENANCE SCHEDULE - FOR EUROPE (CONT.)

MAINTENANCE INTERVALS / MAINTENANCE ITEM		Number of months or driving distance, whichever comes first							
	Months	**12**	**24**	**36**	**48**	**60**	**72**	**84**	**96**
	Miles×1,000	**10**	**20**	**30**	**40**	**50**	**60**	**70**	**80**
	Km×1,000	**15**	**30**	**45**	**60**	**75**	**90**	**105**	**120**
Brake/clutch fluid	T-GDI	I	I	I	I	I	I	I	I
	GDI	Inspect every 30,000 km (20,000 miles) or 12 months							
	MPI	I	I	I	I	I	I	I	I
Disc brakes and pads	T-GDI	I	I	I	I	I	I	I	I
	GDI	Inspect every 30,000 km (20,000 miles) or 12 months							
	MPI	I	I	I	I	I	I	I	I
Power steering fluid and hoses	T-GDI	I	I	I	I	I	I	I	I
	GDI	Inspect every 30,000 km (20,000 miles) or 12 months							
	MPI	I	I	I	I	I	I	I	I
Steering gear rack, linkage and boots	T-GDI	I	I	I	I	I	I	I	I
	GDI	Inspect every 30,000 km (20,000 miles) or 12 months							
	MPI	I	I	I	I	I	I	I	I

I : Inspect and if necessary, adjust, correct, clean or replace.
R : Replace or change.

NORMAL MAINTENANCE SCHEDULE - FOR EUROPE (CONT.)

MAINTENANCE INTERVALS / MAINTENANCE ITEM		Number of months or driving distance, whichever comes first							
	Months	12	24	36	48	60	72	84	96
	Miles×1,000	10	20	30	40	50	60	70	80
	Km×1,000	15	30	45	60	75	90	105	120
Driveshaft and boots			I		I		I		I
Tire (pressure & tread wear)	T-GDI	I	I	I	I	I	I	I	I
	GDI	Inspect every 30,000 km (20,000 miles) or 12 months							
	MPI	I	I	I	I	I	I	I	I
Front suspension ball joints	T-GDI	I	I	I	I	I	I	I	I
	GDI	Inspect every 30,000 km (20,000 miles) or 12 months							
	MPI	I	I	I	I	I	I	I	I
Bolt and nuts on chassis and body	T-GDI	I	I	I	I	I	I	I	I
	GDI	Inspect every 30,000 km (20,000 miles) or 12 months							
	MPI	I	I	I	I	I	I	I	I

I : Inspect and if necessary, adjust, correct, clean or replace.
R : Replace or change.

NORMAL MAINTENANCE SCHEDULE - FOR EUROPE (CONT.)

MAINTENANCE INTERVALS / MAINTENANCE ITEM		Number of months or driving distance, whichever comes first							
	Months	**12**	**24**	**36**	**48**	**60**	**72**	**84**	**96**
	Miles×1,000	**10**	**20**	**30**	**40**	**50**	**60**	**70**	**80**
	Km×1,000	**15**	**30**	**45**	**60**	**75**	**90**	**105**	**120**
Air conditioner refrigerant (if equipped)	T-GDI	I	I	I	I	I	I	I	I
	GDI	Inspect every 30,000 km (20,000 miles) or 12 months							
	MPI	I	I	I	I	I	I	I	I
Air conditioner compressor (if equipped)	T-GDI	I	I	I	I	I	I	I	I
	GDI	Inspect every 30,000 km (20,000 miles) or 12 months							
	MPI	I	I	I	I	I	I	I	I
Climate control air filter (if equipped)			R		R		R		R
Manual transmission fluid/ Double clutch transmission fluid					I				I
Automatic transmission fluid		No check, No service required							

I : Inspect and if necessary, adjust, correct, clean or replace.

R : Replace or change.

MAINTENANCE UNDER SEVERE USAGE CONDITIONS - FOR EUROPE

The following items must be serviced more frequently on cars mainly used under severe driving conditions.
Refer to the chart below for the appropriate maintenance intervals.
R : Replace I : Inspect and if necessary, adjust, correct, clean or replace

Maintenance item		Maintenance operation	Maintenance intervals	Driving condition
Engine oil and engine oil filter	GDI	R	Every 15,000 km (10,000 miles) or 6 months	A, B, C, D, E, F, G, H, I, J, K, L
	MPI	R	Every 7,500 km (5,000 miles) or 6 months	
	TGDI	R	Every 7,500 km (5,000 miles) or 6 months	
Air cleaner filter		R	Replace more frequently depending on the condition	C, E
Spark plugs		R	Replace more frequently depending on the condition	A, B, H, I, L
Manual transaxle fluid (if equipped)		R	Every 120,000 km (80,000 miles)	C, D, E, F, G, H, I, K
Double clutch transmission fluid (if equipped)		R	Every 120,000 km (80,000 miles)	C, D, E, F, G, H, I, K
Automatic transaxle fluid (if equipped)		R	Every 90,000 km (60,000 miles)	A, C, E, F, G, H, I, K

Maintenance item	Maintenance operation	Maintenance intervals	Driving condition
Steering gear rack, linkage and boots	I	Inspect more frequently depending on the condition	C, D, E, F, G
Front suspension ball joints	I	Inspect more frequently depending on the condition	C, D, E, F, G
Disc brakes and pads, calipers and rotors	I	Inspect more frequently depending on the condition	C, D, E, G, H
Parking brake	I	Inspect more frequently depending on the condition	C, D, G, H
Driveshaft and boots	I	Inspect more frequently depending on the condition	C, D, E, F, G, H, I, J
Climate control air filter (if equipped)	R	Replace more frequently depending on the condition	C, E

Severe driving conditions

A : Repeatedly driving short distance of less than 8 km (5 miles) in normal temperature or less than 16 km (10 miles) in freezing temperature

B : Extensive engine idling or low speed driving for long distances

C : Driving on rough, dusty, muddy, unpaved, graveled or salt spread roads

D : Driving in areas using salt or other corrosive materials or in very cold weather

E : Driving in sandy areas

F : More than 50 % driving in heavy city traffic during hot weather above 32 °C (90 °F)

G : Driving on uphill, downhill, or mountain road

H : Towing a trailer or using a camper on roof rack

I : Driving for patrol car, taxi, commercial car or vehicle towing

J : Driving in very cold weather

K : Driving over 170 km/h (106 mile/h)

L : Frequently driving in stop-and-go conditions

NORMAL MAINTENANCE SCHEDULE - EXCEPT EUROPE

The following maintenance services must be performed to ensure good emission control and performance. Keep receipts for all vehicle emission services to protect your warranty. Where both mileage and time are shown, the frequency of service is determined by whichever occurs first.

** : The engine oil level should be checked regularly and maintained properly. Operating with an insufficient amount of oil can damage the engine, and such damage is not covered by warranty.

*1 : Adjust alternator and power steering (and water pump drive belt) and air conditioner drive belt (if equipped).
Inspect and if necessary repair or replace.

*2 : Check the engine oil level and leak every 500 km (350 miles) or before starting a long trip.

*3 : Driving in summer season temperature over 40 °C (104 °F - SAUDI, UAE, OMAN, KUWAIT, BAHRAIN, QATAR, IRAN, YEMEN ETC) or driving over 170 km/h (106 mile/h) must conform the severe driving condition.

*4 : For your convenience, it can be replaced prior to it's interval when you do maintenance of other items.

*5 : Inspect for excessive valve noise and/or engine vibration and adjust if necessary. We recommend that the system be checked by an authorized HYUNDAI dealer.

*6 : The fuel filter is considered to be maintenance free but periodic inspection is recommended for this maintenance schedule depends on fuel quality. If there are some important matters like fuel flow restriction, surging, loss of power, hard starting problem etc, replace the fuel filter immediately regardless of maintenance schedule and we recommend that you consult an authorized HYUNDAI dealer for details.

*7 : When adding coolant, use only deionized water or soft water for your vehicle and never mix hard water in the coolant filled at the factory. An improper coolant mixture can result in serious malfunction or engine damage.

*8 : If good quality gasolines meet Europe Fuel standards (EN228) or equivalents including fuel additives is not available, one bottle of additive is recommended. Additives are available from your authorized HYUNDAI dealer along with information on how to use them. Do not mix other additives.

NORMAL MAINTENANCE SCHEDULE - EXCEPT EUROPE (CONT.)

15,000 km (10,000 miles) or 12months

- ❑ Inspect air cleaner filter - Except Middle East
- ❑ Inspect air conditioner refrigerant/compressor (if equipped)
- ❑ Inspect battery condition
- ❑ Inspect brake lines, hoses and connections
- ❑ Inspect brake/clutch (if equipped) fluid
- ❑ Inspect disc brakes and pads
- ❑ Inspect drive shafts and boots
- ❑ Inspect exhaust system
- ❑ Inspect front suspension ball joints
- ❑ Inspect parking brake
- ❑ Inspect steering gear rack, linkage and boots
- ❑ Inspect tire (pressure & tread wear)
- ❑ Inspect vacuum hose
- ❑ Replace air cleaner filter - For Middle East
- ❑ Replace climate control air filter (if equipped)
- ❑ Replace engine oil and filter (Gasoline)
  - Except Middle East *2
- ❑ Replace engine oil and filter (Gasoline)
  - For Middle East *2
    (Every 10,000 km (6,500 miles) or 12 months *3)

(Continued)

(Continued)

- ❑ Replace engine oil and engine oil filter (TGDI engine) *2 **
  - For South Africa
    (At first, replace at 5,000 km (3,000 miles) or 6 months, after that, every 15,000 km (10,000 miles) or 12 months)
- ❑ Replace engine oil and engine oil filter (TGDI engine) *2 **
  - Except South Africa
    (At first, replace at 5,000 km (3,000 miles) or 6 months, after that, every 8,000 km (5,000 miles) or 6 months)
- ❑ Inspect intercooler, in/out hose, air intake hose (TGDI engine)
  (Every 10,000 km (6,500 miles))
- ❑ Add fuel additives *8
  (Every 5,000 km (3,300 miles) or 6 months)

❊ Inspect : Inspect and if necessary, adjust, correct, clean or replace.

NORMAL MAINTENANCE SCHEDULE - EXCEPT EUROPE (CONT.)

30,000 km (20,000 miles) or 24months

- ❑ Inspect air cleaner filter - Except Middle East
- ❑ Inspect air conditioner refrigerant/compressor (if equipped)
- ❑ Inspect battery condition
- ❑ Inspect brake lines, hoses and connections
- ❑ Inspect brake/clutch(if equipped) fluid
- ❑ Inspect disc brakes and pads
- ❑ Inspect drive belt (Gasoline) *1
- ❑ Inspect drive shafts and boots
- ❑ Inspect exhaust system
- ❑ Inspect front suspension ball joints
- ❑ Inspect fuel filter (Gasoline) *6
- ❑ Inspect parking brake
- ❑ Inspect steering gear rack, linkage and boots
- ❑ Inspect tire (pressure & tread wear)
- ❑ Inspect fuel tank air filter (if equipped)
- ❑ Inspect vacuum hose
- ❑ Replace air cleaner filter - For Middle East
- ❑ Replace climate control air filter (if equipped)
- ❑ Replace engine oil and filter (Gasoline)
  - Except Middle East *2
- ❑ Replace engine oil and filter (Gasoline)
  - For Middle East *2
    (Every 10,000 km (6,500 miles) or 12months *3)

(Continued)

(Continued)

- ❑ Replace engine oil and engine oil filter (TGDI engine) *2 **
  - For South Africa
    (At first, replace at 5,000 km (3,000 miles) or 6 months, after that, every 15,000 km (10,000 miles) or 12 months)
- ❑ Replace engine oil and engine oil filter (TGDI engine) *2 **
  - Except South Africa
    (At first, replace at 5,000 km (3,000 miles) or 6 months, after that, every 8,000 km (5,000 miles) or 6 months)
- ❑ Inspect intercooler, in/out hose, air intake hose (TGDI engine)
  (Every 10,000 km (6,500 miles))
- ❑ Add fuel additives *8
  (Every 5,000km (3,300miles) or 6 months)

❊ Inspect : Inspect and if necessary, adjust, correct, clean or replace.

NORMAL MAINTENANCE SCHEDULE - EXCEPT EUROPE (CONT.)

45,000 km (30,000 miles) or 36months

- ❑ Inspect air conditioner refrigerant/compressor (if equipped)
- ❑ Inspect battery condition
- ❑ Inspect brake lines, hoses and connections
- ❑ Inspect brake/clutch(if equipped) fluid
- ❑ Inspect disc brakes and pads
- ❑ Inspect drive shafts and boots
- ❑ Inspect exhaust system
- ❑ Inspect front suspension ball joints
- ❑ Inspect parking brake
- ❑ Inspect steering gear rack, linkage and boots
- ❑ Inspect tire (pressure & tread wear)
- ❑ Inspect vacuum hose
- ❑ Replace air cleaner filter
- ❑ Replace climate control air filter (if equipped)
- ❑ Replace engine oil and filter (Gasoline)
  - Except Middle East *2
- ❑ Replace engine oil and filter (Gasoline)
  - For Middle East *2
    (Every 10,000 km (6,500 miles) or 12months *3)

(Continued)

(Continued)

- ❑ Replace engine oil and engine oil filter (TGDI engine) *2 **
  - For South Africa
    (At first, replace at 5,000 km (3,000 miles) or 6 months, after that, every 15,000 km (10,000 miles) or 12 months)
- ❑ Replace engine oil and engine oil filter (TGDI engine) *2 **
  - Except South Africa
    (At first, replace at 5,000 km (3,000 miles) or 6 months, after that, every 8,000 km (5,000 miles) or 6 months)
- ❑ Inspect intercooler, in/out hose, air intake hose (TGDI engine)
  (Every 10,000 km (6,500 miles))
- ❑ Add fuel additives *8
  (Every 5,000km (3,300miles) or 6 months)

❊ Inspect : Inspect and if necessary, adjust, correct, clean or replace.

NORMAL MAINTENANCE SCHEDULE - EXCEPT EUROPE (CONT.)

60,000 km (40,000 miles) or 48months

- ❑ Inspect air cleaner filter - Except Middle East
- ❑ Inspect air conditioner refrigerant/compressor (if equipped)
- ❑ Inspect battery condition
- ❑ Inspect brake lines, hoses and connections
- ❑ Inspect brake/clutch (if equipped) fluid
- ❑ Inspect disc brakes and pads
- ❑ Inspect drive belt (Gasoline) *1
- ❑ Inspect drive shafts and boots
- ❑ Inspect exhaust system
- ❑ Inspect front suspension ball joints
- ❑ Inspect fuel lines, hoses and connections
- ❑ Inspect parking brake
- ❑ Inspect steering gear rack, linkage and boots
- ❑ Inspect tire (pressure & tread wear)
- ❑ Inspect manual transaxle fluid (if equipped)
- ❑ Inspect vapor hose and fuel filler cap (Gasoline)
- ❑ Inspect vacuum hose
- ❑ Replace air cleaner filter - For Middle East
- ❑ Replace climate control air filter (if equipped)
- ❑ Replace engine oil and filter (Gasoline)
  - Except Middle East *2

(Continued)

(Continued)

- ❑ Replace engine oil and filter (Gasoline)
  - For Middle East *2
    (Every 10,000 km (6,500 miles) or 12months *3)
- ❑ Replace engine oil and engine oil filter (TGDI engine) *2 **
  - For South Africa
    (At first, replace at 5,000 km (3,000 miles) or 6 months, after that, every 15,000 km (10,000 miles) or 12 months)
- ❑ Replace engine oil and engine oil filter (TGDI engine) *2 **
  - Except South Africa
    (At first, replace at 5,000 km (3,000 miles) or 6 months, after that, every 8,000 km (5,000 miles) or 6 months)
- ❑ Replace fuel filter (Gasoline) *6
- ❑ Replace fuel tank air filter (if equipped)
- ❑ Replace spark plugs *4
- ❑ Inspect cooling system
  (At first, 60,000 km (40,000 miles) or 48months after that, every 30,000 km (20,000 miles) or 24months)
- ❑ Inspect intercooler, in/out hose, air intake hose (TGDI engine)
  (Every 10,000 km (6,500 miles))
- ❑ Add fuel additives *8
  (Every 5,000km (3,300miles) or 6 months)

❊ Inspect : Inspect and if necessary, adjust, correct, clean or replace.

NORMAL MAINTENANCE SCHEDULE - EXCEPT EUROPE (CONT.)

75,000 km (50,000 miles) or 60months

- ❑ Inspect air cleaner filter - Except Middle East
- ❑ Inspect air conditioner refrigerant/compressor (if equipped)
- ❑ Inspect battery condition
- ❑ Inspect brake lines, hoses and connections
- ❑ Inspect brake/clutch(if equipped) fluid
- ❑ Inspect disc brakes and pads
- ❑ Inspect drive shafts and boots
- ❑ Inspect exhaust system
- ❑ Inspect front suspension ball joints
- ❑ Inspect parking brake
- ❑ Inspect steering gear rack, linkage and boots
- ❑ Inspect tire (pressure & tread wear)
- ❑ Inspect vacuum hose
- ❑ Replace air cleaner filter - For Middle East
- ❑ Replace climate control air filter (if equipped)
- ❑ Replace engine oil and filter (Gasoline)
  - Except Middle East *2
- ❑ Replace engine oil and filter (Gasoline)
  - For Middle East *2
    (Every 10,000 km (6,500 miles) or 12 months *3)

(Continued)

(Continued)

- ❑ Replace engine oil and engine oil filter (TGDI engine) *2 **
  - For South Africa
    (At first, replace at 5,000 km (3,000 miles) or 6 months, after that, every 15,000 km (10,000 miles) or 12 months)
- ❑ Replace engine oil and engine oil filter (TGDI engine) *2 **
  - Except South Africa
    (At first, replace at 5,000 km (3,000 miles) or 6 months, after that, every 8,000 km (5,000 miles) or 6 months)
- ❑ Replace spark plugs (TGDI engine) *4
  (Every 75,000 km (59,000 miles) or 60 months)
- ❑ Inspect intercooler, in/out hose, air intake hose (TGDI engine)
  (Every 10,000 km (6,500 miles))
- ❑ Add fuel additives *8
  (Every 5,000km (3,300miles) or 6 months)

❊ Inspect : Inspect and if necessary, adjust, correct, clean or replace.

NORMAL MAINTENANCE SCHEDULE - EXCEPT EUROPE (CONT.)

90,000 km (60,000 miles) or 72months

- ❑ Inspect air conditioner refrigerant/compressor (if equipped)
- ❑ Inspect battery condition
- ❑ Inspect brake lines, hoses and connections
- ❑ Inspect brake/clutch(if equipped) fluid
- ❑ Inspect disc brakes and pads
- ❑ Inspect drive belt (Gasoline) *1
- ❑ Inspect drive shafts and boots
- ❑ Inspect exhaust system
- ❑ Inspect front suspension ball joints
- ❑ Inspect fuel filter (Gasoline) *6
- ❑ Inspect parking brake
- ❑ Inspect steering gear rack, linkage and boots
- ❑ Inspect tire (pressure & tread wear)
- ❑ Inspect fuel tank air filter (if equipped)
- ❑ Inspect vacuum hose
- ❑ Replace air cleaner filter
- ❑ Replace climate control air filter (if equipped)
- ❑ Replace engine oil and filter (Gasoline)
  - Except Middle East *2
- ❑ Replace engine oil and filter (Gasoline)
  - For Middle East *2
    (Every 10,000 km (6,500 miles) or 12months *3)

(Continued)

(Continued)

- ❑ Replace engine oil and engine oil filter (TGDI engine) *2 **
  - For South Africa
    (At first, replace at 5,000 km (3,000 miles) or 6 months, after that, every 15,000 km (10,000 miles) or 12 months)
- ❑ Replace engine oil and engine oil filter (TGDI engine) *2 **
  - Except South Africa
    (At first, replace at 5,000 km (3,000 miles) or 6 months, after that, every 8,000 km (5,000 miles) or 6 months)
- ❑ Inspect cooling system
  (At first, 60,000 km (40,000 miles) or 48months after that, every 30,000 km (20,000 miles) or 24months)
- ❑ Inspect valve clearance *5
- ❑ Inspect intercooler, in/out hose, air intake hose (TGDI engine)
  (Every 10,000 km (6,500 miles))
- ❑ Add fuel additives *8
  (Every 5,000km (3,300miles) or 6 months)

❊ Inspect : Inspect and if necessary, adjust, correct, clean or replace.

NORMAL MAINTENANCE SCHEDULE - EXCEPT EUROPE (CONT.)

105,000 km (70,000 miles) or 84months

- ❑ Inspect air cleaner filter - Except Middle East
- ❑ Inspect air conditioner refrigerant/compressor (if equipped)
- ❑ Inspect battery condition
- ❑ Inspect brake lines, hoses and connections
- ❑ Inspect brake/clutch(if equipped) fluid
- ❑ Inspect disc brakes and pads
- ❑ Inspect drive shafts and boots
- ❑ Inspect exhaust system
- ❑ Inspect front suspension ball joints
- ❑ Inspect parking brake
- ❑ Inspect steering gear rack, linkage and boots
- ❑ Inspect tire (pressure & tread wear)
- ❑ Inspect vacuum hose
- ❑ Replace air cleaner filter - For Middle East
- ❑ Replace climate control air filter (if equipped)
- ❑ Replace engine oil and filter (Gasoline)
  - Except Middle East *2
- ❑ Replace engine oil and filter (Gasoline)
  - For Middle East *2
  (Every 10,000 km (6,500 miles) or 12months *3)

(Continued)

(Continued)

- ❑ Replace engine oil and engine oil filter (TGDI engine) *2 **
  - For South Africa
  (At first, replace at 5,000 km (3,000 miles) or 6 months, after that, every 15,000 km (10,000 miles) or 12 months)
- ❑ Replace engine oil and engine oil filter (TGDI engine) *2 **
  - Except South Africa
  (At first, replace at 5,000 km (3,000 miles) or 6 months, after that, every 8,000 km (5,000 miles) or 6 months)
- ❑ Inspect intercooler, in/out hose, air intake hose (TGDI engine)
  (Every 10,000 km (6,500 miles))
- ❑ Add fuel additives *8
  (Every 5,000km (3,300miles) or 6 months)

❊ Inspect : Inspect and if necessary, adjust, correct, clean or replace.

NORMAL MAINTENANCE SCHEDULE - EXCEPT EUROPE (CONT.)

120,000 km (80,000 miles) or 96months

- ❑ Inspect air cleaner filter - Except Middle East
- ❑ Inspect air conditioner refrigerant/compressor (if equipped)
- ❑ Inspect battery condition
- ❑ Inspect brake lines, hoses and connections
- ❑ Inspect brake/clutch(if equipped) fluid
- ❑ Inspect disc brakes and pads
- ❑ Inspect drive belt (Gasoline) *1
- ❑ Inspect drive shafts and boots
- ❑ Inspect exhaust system
- ❑ Inspect front suspension ball joints
- ❑ Inspect fuel lines, hoses and connections
- ❑ Inspect parking brake
- ❑ Inspect steering gear rack, linkage and boots
- ❑ Inspect tire (pressure & tread wear)
- ❑ Inspect manual transaxle fluid (if equipped)
- ❑ Inspect vapor hose and fuel filler cap (Gasoline)
- ❑ Inspect vacuum hose
- ❑ Replace air cleaner filter - For Middle East
- ❑ Replace climate control air filter (if equipped)
- ❑ Replace fuel filter (Gasoline) *6
- ❑ Replace fuel tank air filter (if equipped)
- ❑ Replace engine oil and filter (Gasoline)
  - Except Middle East *2

(Continued)

(Continued)

- ❑ Replace engine oil and filter (Gasoline)
  - For Middle East *2
    (Every 10,000 km (6,500 miles) or 12months *3)
- ❑ Replace engine oil and engine oil filter (TGDI engine) *2 **
  - For South Africa
    (At first, replace at 5,000 km (3,000 miles) or 6 months, after that, every 15,000 km (10,000 miles) or 12 months)
- ❑ Replace engine oil and engine oil filter (TGDI engine) *2 **
  - Except South Africa
    (At first, replace at 5,000 km (3,000 miles) or 6 months, after that, every 8,000 km (5,000 miles) or 6 months)
- ❑ Replace spark plugs *4
- ❑ Replace coolant *7
  (At first, 210,000 km (120,000 miles) or 120months after that, every 30,000 km (20,000 miles) or 24months *4)
- ❑ Inspect cooling system
  (At first, 60,000 km (40,000 miles) or 48months after that, every 30,000 km (20,000 miles) or 24months)
- ❑ Inspect intercooler, in/out hose, air intake hose (TGDI engine)
  (Every 10,000 km (6,500 miles))
- ❑ Add fuel additives *8
  (Every 5,000km (3,300miles) or 6 months)

❊ Inspect : Inspect and if necessary, adjust, correct, clean or replace.

NORMAL MAINTENANCE SCHEDULE - EXCEPT EUROPE (CONT.)

✻ NOTICE

In case of GDI engine, replace the spark plug*[4] at 160,000 km (100,000 miles) or 120months.

No check, No service required
❑ Automatic transaxle fluid

MAINTENANCE UNDER SEVERE USAGE CONDITIONS - EXCEPT EUROPE

The following items must be serviced more frequently on cars mainly used under severe driving conditions.
Refer to the chart below for the appropriate maintenance intervals.
R : Replace I : Inspect and if necessary, adjust, correct, clean or replace

Maintenance item			Maintenance operation	Maintenance intervals	Driving condition
Engine oil and engine oil filter	Gasoline	Except Middle East	R	Every 7,500 km (5,000 miles) or 6 months	A, B, C, D, E, F, G, H, I, J, K, L
		For Middle East, T-GDI engine (Except South Africa)	R	Every 5,000 km (3,000 miles) or 6 months	
		T-GDI engine (For South Africa)	R	At first, every 5,000 km (3,000 miles) or 6 months, after that, every 7,500 km (5,000 miles) or 6 months	
Air cleaner filter			R	Replace more frequently depending on the condition	C, E
Spark plugs			R	Replace more frequently depending on the condition	A, B, H, I, L
Manual transaxle fluid (if equipped)			R	Every 120,000 km (80,000 miles)	C, E, F, G, H, I, K
Automatic transaxle fluid (if equipped)			R	Every 100,000 km (62,500 miles)	A, C, E, F, G, H, I, K

Maintenance item	Maintenance operation	Maintenance intervals	Driving condition
Steering gear rack, linkage and boots	I	Inspect more frequently depending on the condition	C, D, E, F, G
Front suspension ball joints	I	Inspect more frequently depending on the condition	C, D, E, F, G
Disc brakes and pads, calipers and rotors	I	Inspect more frequently depending on the condition	C, D, E, G, H
Parking brake	I	Inspect more frequently depending on the condition	C, D, G, H
Driveshaft and boots	I	Inspect more frequently depending on the condition	C, D, E, F, G, H, I, J
Climate control air filter (if equipped)	R	Replace more frequently depending on the condition	C, E

Severe driving conditions

A : Repeated short distance driving
B : Extensive idling
C : Driving in dusty, rough roads
D : Driving in areas using salt or other corrosive materials or in very cold weather
E : Driving in sandy areas
F : More than 50 % driving in heavy city traffic during hot weather above 32°C (90°F)
G : Driving in mountainous areas.
H : Towing a trailer
I : Driving for patrol car, taxi, commercial car or vehicle towing
J : Driving over 170 km/h (106 mile/h)
K : Frequently driving in stop-and-go conditions
L : Driving in very cold weather

EXPLANATION OF SCHEDULED MAINTENANCE ITEMS

Engine oil and filter

The engine oil and filter should be changed at the intervals specified in the maintenance schedule. If the car is being driven in severe conditions, more frequent oil and filter changes are required.

Drive belts

Inspect all drive belts for evidence of cuts, cracks, excessive wear or oil saturation and replace if necessary. Drive belts should be checked periodically for proper tension and adjusted as necessary.

⚠ CAUTION

When you are inspecting the belt, place the ignition switch in the LOCK/OFF or ACC position.

Fuel filter (cartridge)

A clogged filter can limit the speed at which the vehicle may be driven, damage the emission system and cause multiple issues such as hard starting. If an excessive amount of foreign matter accumulates in the fuel tank, the filter may require replacement more frequently.

After installing a new filter, run the engine for several minutes, and check for leaks at the connections. We recommend that the fuel filter be replaced by an authorized HYUNDAIdealer.

Fuel lines, fuel hoses and connections

Check the fuel lines, fuel hoses and connections for leakage and damage. We recommend that the fuel lines, fuel hoses and connectionsr be replaced by an authorized HYUNDAI dealer.

Vapor hose and fuel filler cap

The vapor hose and fuel filler cap should be inspected at those intervals specified in the maintenance schedule. Make sure that a new vapor hose or fuel filler cap is correctly replaced.

Vacuum crankcase ventilation hoses (if equipped)

Inspect the surface of hoses for evidence of heat and/or mechanical damage. Hard and brittle rubber, cracking, tears, cuts, abrasions, and excessive swelling indicate deterioration. Particular attention should be paid to examine those hose surfaces nearest to high heat sources, such as the exhaust manifold.

Inspect the hose routing to assure that the hoses do not come in contact with any heat source, sharp edges or moving component which might cause heat damage or mechanical wear. Inspect all hose connections, such as clamps and couplings, to make sure they are secure, and that no leaks are present. Hoses should be replaced immediately if there is any evidence of deterioration or damage.

Air cleaner filter

We recommend that the air cleaner filter be replaced by an authorized HYUNDAI dealer.

Spark plugs (for gasoline engine)

Make sure to install new spark plugs of the correct heat range.

⚠ WARNING

Do not disconnect and inspect spark plugs when the engine is hot. You may burn yourself.

Valve clearance (if equipped)

Inspect for excessive valve noise and/or engine vibration and adjust if necessary. We recommend that the system be serviced by an authorized HYUNDAI dealer.

Cooling system

Check cooling system components, such as radiator, coolant reservoir, hoses and connections for leakage and damage. Replace any damaged parts.

Coolant

The coolant should be changed at the intervals specified in the maintenance schedule.

Manual transaxle fluid (if equipped)

Inspect the manual transaxle fluid according to the maintenance schedule.

Double clutch transmission fluid (if equipped)

Inspect the double clutch transmission fluid according to the maintenance schedule.

Automatic transaxle fluid (if equipped)

Automatic transaxle fluid should not be checked under normal usage conditions.

We recommend that the automatic transaxle fluid be replaced by an authorized HYUNDAI dealer. In accordance to the scheduled maintenance at the beginning of this chapter.

✻ NOTICE

Automatic transaxle fluid color is basically red.

As the vehicle is driven, the automatic transaxle fluid will begin to look darker. It is normal condition and you should not judge the need to replace the fluid based upon the changed color.

⚠ CAUTION

The use of a non-specified fluid could result in transaxle malfunction and failure.

Use only specified automatic transaxle fluid. (Refer to "Recommended lubricants and capacities" in section 8.)

Brake hoses and lines

Visually check for proper installation, chafing, cracks, deterioration and any leakage. Replace any deteriorated or damaged parts immediately.

Brake fluid

Check brake fluid level in the brake fluid reservoir. The level should be between "MIN" (Minimum) and "MAX" (Maximum) marks on the side of the reservoir. Use only hydraulic brake fluid conforming to DOT 3 or DOT 4 specification.

Parking brake

Inspect the parking brake system including the parking brake pedal and cables.

Brake pads, calipers and rotors

Check the pads for excessive wear, discs for run out and wear, and calipers for fluid leakage.

For more information on checking the pads or lining wear limit, refer to the Hyundai web site.

(**http://brakemanual.hmc.co.kr**)

Suspension mounting bolts

Check the suspension connections for looseness or damage. Retighten to the specified torque.

Steering gear box, linkage & boots/lower arm ball joint

With the vehicle stopped and engine off, check for excessive free-play in the steering wheel.

Check the linkage for bends or damage. Check the dust boots and ball joints for deterioration, cracks, or damage. Replace any damaged parts.

Drive shafts and boots

Check the drive shafts, boots and clamps for cracks, deterioration, or damage. Replace any damaged parts and, if necessary, repack the grease.

Air conditioning refrigerant (if equipped)

Check the air conditioning lines and connections for leakage and damage.

ENGINE OIL

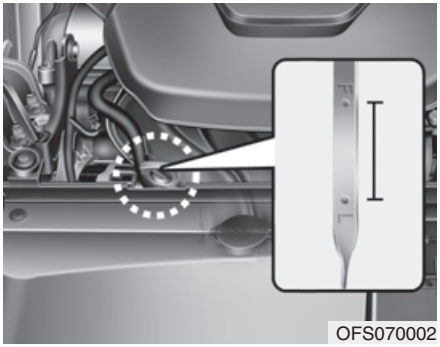

OFS070002

Checking the engine oil level

1. Be sure the vehicle is on level ground.
2. Start the engine and allow it to reach normal operating temperature.
3. Turn the engine off and wait for a few minutes (about 5 minutes) for the oil to return to the oil pan.
4. Pull the dipstick out, wipe it clean, and reinsert it fully.

⚠ WARNING - Radiator hose

Be very careful not to touch the radiator hose when checking or adding the engine oil as it may be hot enough to burn you.

5. Pull the dipstick out again and check the level. The level should be between F (Full) and L (Low).

⚠ CAUTION

- ***Do not spill engine oil, when adding or changing engine oil. If you drop the engine oil on the engine room, wipe it off immediately.***
- ***When you wipe the oil level gauge, you should wipe it with a clean cloth. When mixed with debris, it can cause engine damage.***

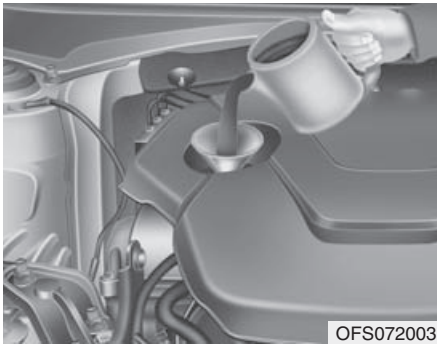
OFS072003

If it is near or at L (Low), add enough oil to bring the level to F (Full). **Do not overfill.**

Use a funnel to help prevent oil from being spilled on engine components.

Use only the specified engine oil. (Refer to "Recommended lubricants and capacities" in section 8.)

⚠ CAUTION

Do not overfill the engine oil. It may damage the engine.

WARNING

Used engine oil may cause skin irritation or cancer if left in contact with the skin for prolonged periods of time. Used engine oil contains chemicals that have caused cancer in laboratory animals. Always protect your skin by washing your hands thoroughly with soap and warm water as soon as possible after handling used oil.

Changing the engine oil and filter

We recommend that the engine oil and filter be replaced by an authorized HYUNDAI dealer.

ENGINE COOLANT

The high-pressure cooling system has a reservoir filled with year-round antifreeze coolant. The reservoir is filled at the factory.

Check the antifreeze protection and coolant level at least once a year, at the beginning of the winter season, and before traveling to a colder climate.

⚠ CAUTION

- ***When the engine overheats from low engine coolant, suddenly adding engine coolant may cause cracks in the engine. To prevent damage, add engine coolant slowly in small quantities.***
- ***Do not drive with no engine coolant. It may cause water pump failure and engine seizure, etc.***

Checking the coolant level

⚠ WARNING

Removing radiator cap

- **Never attempt to remove the radiator cap while the engine is operating or hot. Doing so might lead to cooling system and engine damage and could result in serious personal injury from escaping hot coolant or steam.**
- **Turn the engine off and wait until it cools down. Use extreme care when removing the radiator cap. Wrap a thick towel around it, and turn it counterclockwise slowly to the first stop. Step back while the pressure is released from the cooling system. When you are sure all the pressure has been released, press down on the cap, using a thick towel, and continue turning counterclockwise to remove it.**

(Continued)

(Continued)

- **Even if the engine is not operating, do not remove the radiator cap or the drain plug while the engine and radiator are hot. Hot coolant and steam may still blow out under pressure, causing serious injury.**

⚠ WARNING

The electric motor (cooling fan) is controlled by engine coolant temperature, refrigerant pressure and vehicle speed. It may sometimes operate even when the engine is not running. Use extreme caution when working near the blades of the cooling fan so that you are not injured by a rotating fan blades. As the engine coolant temperature decreases, the electric motor will automatically shut off. This is a normal condition.

If your vehicle is equipped with GDI, the electric motor (cooling fan) may operate until you disconnect the negative battery cable.

The electric cooling fan can start at any time when the engine coolant temperature is high. Disconnect the negative battery cable when servicing the vehicle.

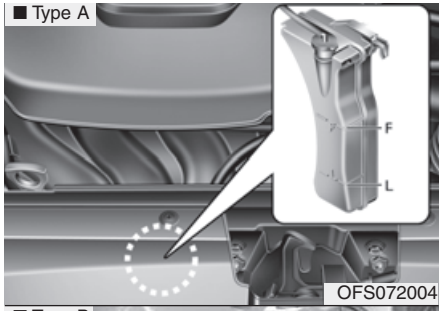

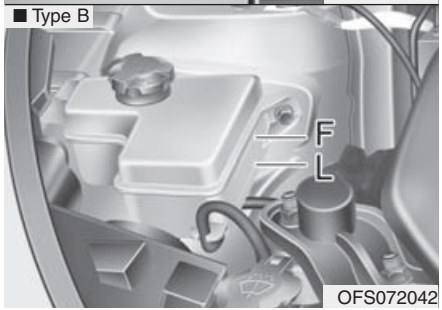

Check the condition and connections of all cooling system hoses and heater hoses. Replace any swollen or deteriorated hoses.

The coolant level should be filled between F (Full) and L (Low) marked on the side of the coolant reservoir when the engine is cool.

If the coolant level is low, add enough distilled (deionized) water. Bring the level to F (Full), but do not overfill. If frequent additions are required, we recommend that the system be inspected by an authorized HYUNDAI dealer.

Recommended engine coolant

- When adding coolant, use only deionized water or soft water for your vehicle and never mix hard water in the coolant filled at the factory. An improper coolant mixture can result in serious malfunction or engine damage.
- The engine in your vehicle has aluminum engine parts and must be protected by an ethylene-glycol-based coolant to prevent corrosion and freezing.
- DO NOT USE alcohol or methanol coolant or mix them with the specified coolant.
- Do not use a solution that contains more than 60% antifreeze or less than 35% antifreeze, which would reduce the effectiveness of the solution.

For mixture percentage, refer to the following table.

Ambient Temperature	Mixture Percentage (volume)	
	Antifreeze	Water
-15°C (5°F)	35	65
-25°C (-13°F)	40	60
-35°C (-31°F)	50	50
-45°C (-49°F)	60	40

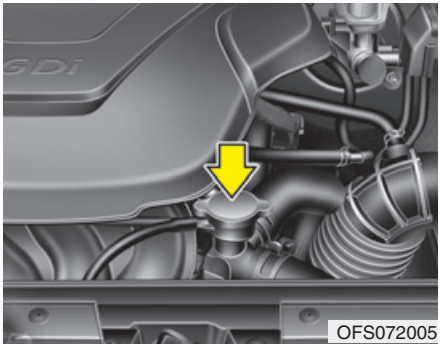

OFS072005

⚠ WARNING

Radiator cap

Do not remove the radiator cap when the engine and radiator are hot. Scalding hot coolant and steam may blow out under pressure causing serious injury.

Changing the coolant

We recommend that the coolant be replaced by an authorized HYUNDAI dealer.

⚠ CAUTION

Put a thick cloth or fabric around the radiator cap before refilling the coolant in order to prevent the coolant from overflowing into engine parts such as the alternator.

⚠ WARNING - Coolant

- **Do not use radiator coolant or antifreeze in the washer fluid reservoir.**
- **Radiator coolant can severely obscure visibility when sprayed on the windshield and may cause loss of vehicle control or damage to paint and body trim.**

BRAKE/CLUTCH FLUID (IF EQUIPPED)

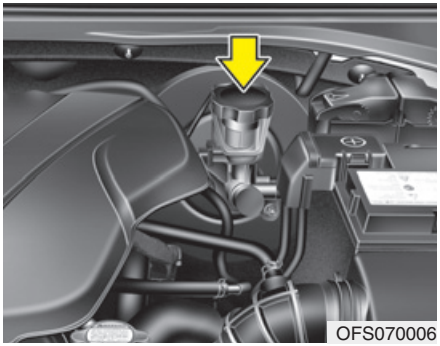
OFS070006

Checking the brake/clutch fluid level

Check the fluid level in the reservoir periodically. The fluid level should be between MAX (Maximum) and MIN (Minimum) marks on the side of the reservoir.
Before removing the reservoir cap and adding brake/clutch fluid, clean the area around the reservoir cap thoroughly to prevent brake/clutch fluid contamination.
If the level is low, add fluid to the MAX (Maximum) level. The level will fall with accumulated mileage. This is a normal condition associated with the wear of the brake linings and/or clutch disc (if equipped).

If the fluid level is excessively low, we recommend that the system be checked by an authorized HYUNDAI dealer.

Use only the specified brake/clutch fluid. (Refer to "Recommended lubricants or capacities" in section 8.)

Never mix different types of fluid.

⚠ WARNING - Loss of brake fluid

In the event the brake system requires frequent additions of fluid, we recommend that the system be inspected by an authorized HYUNDAI dealer.

✻ NOTICE

Before removing the brake/clutch filler cap, read the warning on the cap.

⚠ WARNING

Clean filler cap before removing. Use only DOT3 or DOT4 brake/clutch fluid from a sealed container.

⚠ WARNING - Brake/clutch fluid

When changing and adding brake/clutch fluid, handle it carefully. Do not let it come in contact with your eyes. If brake/clutch fluid come in contact with your eyes, immediately flush them with a large quantity of fresh tap water. Have your eyes examined by a doctor as soon as possible.

⚠ CAUTION

Do not allow brake/clutch fluid to contact the vehicle's body paint, as paint damage will result.

Brake/clutch fluid, which has been exposed to open air for an extended time should never be used as its quality cannot be guaranteed. It should be properly disposed. Don't put in the wrong kind of fluid. A few drops of mineral-based oil, such as engine oil, in your brake/clutch system can damage brake/clutch system parts.

WASHER FLUID

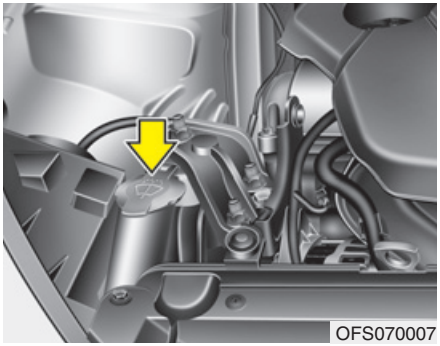
OFS070007

Checking the washer fluid level

Check the fluid level in the washer fluid reservoir and add fluid if necessary. Plain water may be used if washer fluid is not available. However, use washer solvent with antifreeze characteristics in cold climates to prevent freezing.

⚠ WARNING - Coolant

- **Do not use radiator coolant or antifreeze in the washer fluid reservoir.**
- **Radiator coolant can severely obscure visibility when sprayed on the windshield and may cause loss of vehicle control or damage to the paint and body trim.**
- **Windshield washer fluid agents contain some amounts of alcohol and can be flammable under certain circumstances. Do not allow sparks or flame come in contact with the washer fluid or the washer fluid reservoir. Damage to the vehicle or occupants could occur.**
- **Windshield washer fluid is poisonous to humans and animals. Do not drink and avoid coming in contact with the windshield washer fluid. Serious injury or death could occur.**

PARKING BRAKE

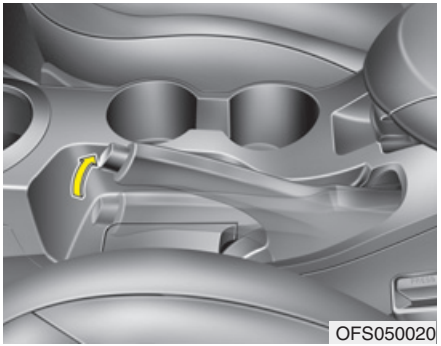
OFS050020

Checking the parking brake

Check the stroke of the parking brake by counting the number of “clicks” heard while fully applying it from the released position. Also, the parking brake alone should securely hold the vehicle on a fairly steep grade. If the stroke is more or less than specified, we recommend that the system be serviced by an authorized HYUNDAI dealer.

Stroke : 6~8 “clicks” at a force of 20 kg (44 lbs, 196 N).

AIR CLEANER

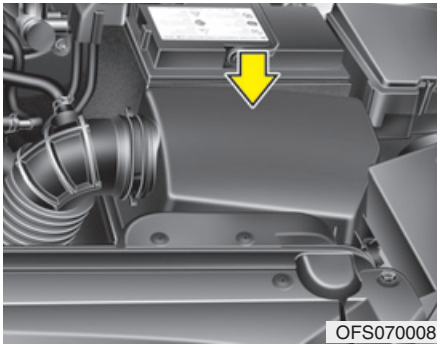
OFS070008

Filter replacement

You can clean the filter when inspecting the air cleaner element.

Clean the filter by using compressed air.

1. Loosen the air cleaner cover attaching clips and open the cover.

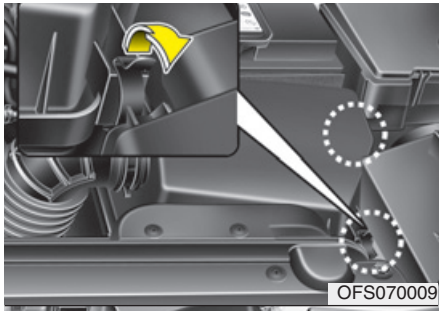
OFS070009

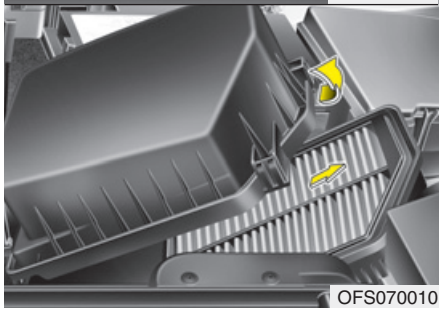
OFS070010

2. Wipe the inside of the air cleaner.
3. Replace the air cleaner filter.
4. Lock the cover with the cover attaching clips.

Replace the filter according to the Maintenance Schedule.

If the vehicle is operated in extremely dusty or sandy areas, replace the element more often than the usual recommended intervals. (Refer to "Maintenance under severe usage conditions" in this section.)

⚠ CAUTION

- ***Do not drive with the air cleaner removed; this will result in excessive engine wear.***
- ***When removing the air cleaner filter, be careful that dust or dirt does not enter the air intake, or damage may result.***
- ***We recommend that you use parts for replacement from an authorized HYUNDAI dealer.***

CLIMATE CONTROL AIR FILTER (IF EQUIPPED)

Filter inspection

If the vehicle is operated in the severely air-polluted cities or on dusty rough roads for a long period, it should be inspected more frequently and replaced earlier. When you, the owner, replace the climate control air filter, replace it performing the following procedure, and be careful to avoid damaging other components.

Replace the filter according to the maintenance Schedule.

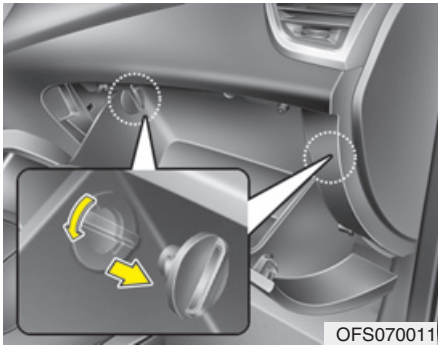
OFS070011

Filter replacement

1. Open the glove box.

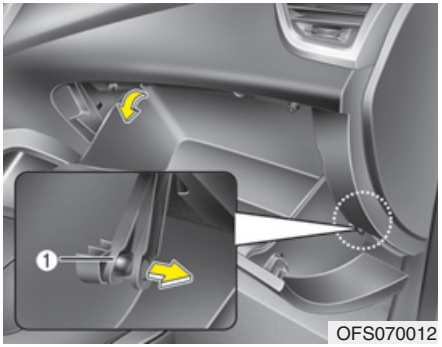

OFS070012

2. Loosen the screws (1) and then remove the glove box inner panel.

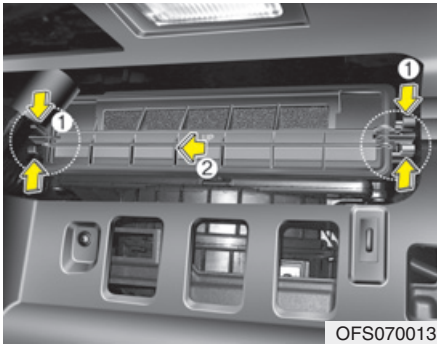

OFS070013

3. Remove the climate control air filter cover while pressing the lock on the right side of the cover.

OFS070014

4. Replace the climate control air filter.
5. Reassemble in the reverse order of disassembly.

✻ NOTICE

When replacing the climate control air filter install it properly. Otherwise, the system may produce noise and the effectiveness of the filter may be reduced.

WIPER BLADES

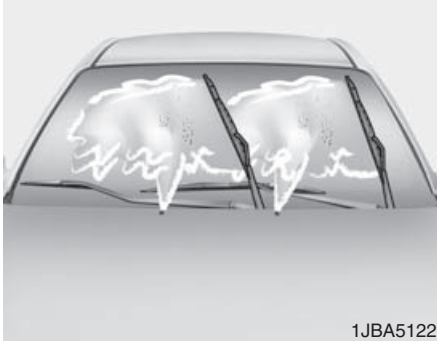
1JBA5122

Blade inspection

✻ NOTICE

Commercial hot waxes applied by automatic car washes have been known to make the windshield difficult to clean.

Contamination of either the windshield or the wiper blades with foreign matter can reduce the effectiveness of the windshield wipers. Common sources of contamination are insects, tree sap, and hot wax treatments used by some commercial car washes. If the blades are not wiping properly, clean both the window and the blades with a good cleaner or mild detergent, and rinse thoroughly with clean water.

⚠ CAUTION

To prevent damage to the wiper blades, do not use gasoline, kerosene, paint thinner, or other solvents on or near them.

Blade replacement

When the wipers no longer clean adequately, the blades may be worn or cracked, and require replacement.

⚠ CAUTION

To prevent damage to the wiper arms or other components, do not attempt to move the wipers manually.

⚠ CAUTION

The use of a non-specified wiper blade could result in wiper malfunction and failure.

Front windshield wiper blade

Type A

1. Raise the wiper arm and turn the wiper blade assembly to expose the plastic locking clip.

⚠ CAUTION

Do not allow the wiper arm to fall against the windshield, since it may chip or crack the windshield.

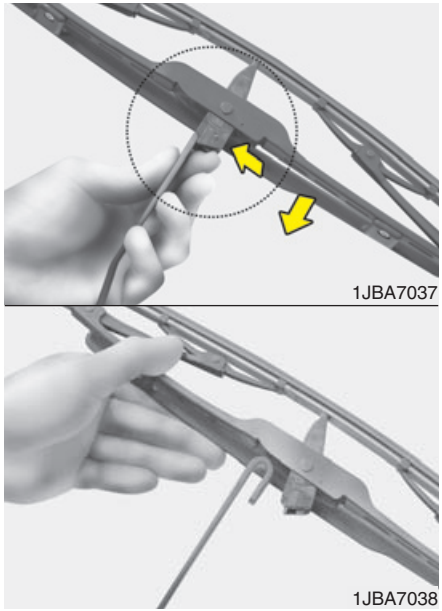

2. Compress the clip and slide the blade assembly downward.
3. Lift it off the arm.
4. Install the blade assembly in the reverse order of removal.

Type B

1. Raise the wiper arm.

⚠ CAUTION

Do not allow the wiper arm to fall against the windshield, since it may chip or crack the windshield.

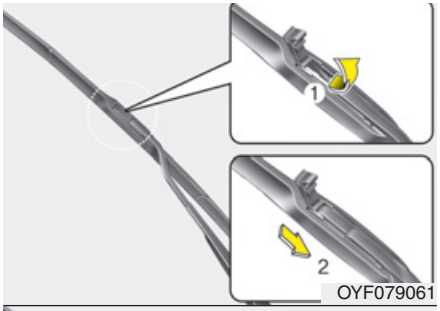

OYF079061

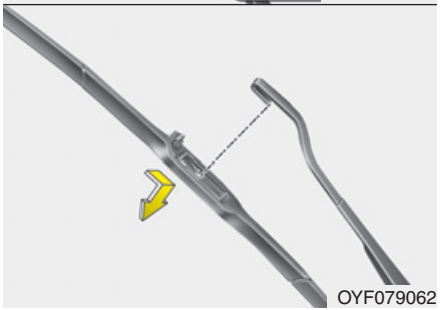
OYF079062

2. Lift up the wiper blade clip. Then pull down the blade assembly and remove it.
3. Install the blade assembly in the reverse order of removal.
4. Return the wiper arm on the windshield.

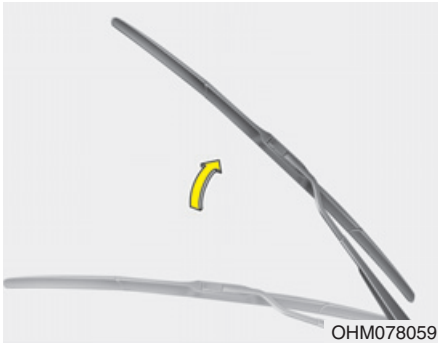
OHM078059

Type C

1. Raise the wiper arm.

> ⚠ **CAUTION**
>
> ***Do not allow the wiper arm to fall against the windshield, since it may chip or crack the windshield.***

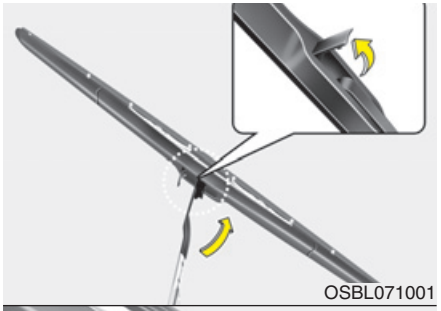
OSBL071001

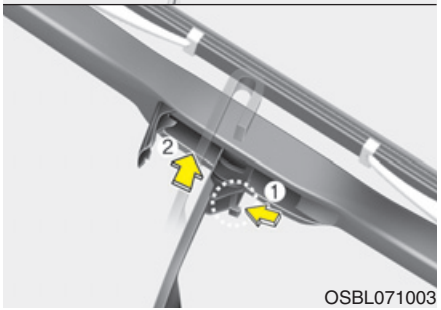

OSBL071003

2. Turn the wiper blade clip. Then lift up the blade clip.
3. Push the clip (1) and push up the wiper arm (2).

OSBL071002

4. Push down the wiper arm (3) and install the new blade assembly in the reverse order of removal.
5. Return the wiper arm on the windshield.

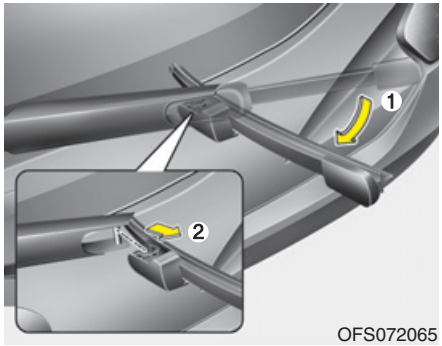

OFS072065

Rear window wiper blade

1. Raise the wiper arm and turn the wiper blade (1).
2. Pull out the wiper blade assembly (2).

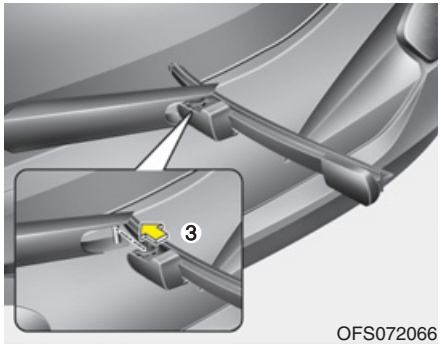

OFS072066

3. Install the new blade assembly (3) by inserting the center part into the slot in the wiper arm and turn the wiper blade to original position.
4. Make sure the blade assembly is installed firmly by trying to pull it slightly.

To prevent damage to the wiper arms or other components, we recommend that the wiper blade be replaced by an authorized HYUNDAI dealer.

BATTERY

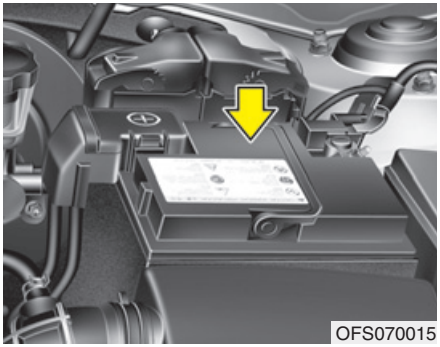
OFS070015

For best battery service

- Keep the battery securely mounted.
- Keep the battery top clean and dry.
- Keep the terminals and connections clean, tight, and coated with petroleum jelly or terminal grease.
- Rinse any spilled electrolyte from the battery immediately with a solution of water and baking soda.
- If the vehicle is not going to be used for an extended time, disconnect the battery cables.

✻ NOTICE

Basically equipped battery is maintenance free type. If your vehicle is equipped with the battery marked with LOWER and UPPER on the side, you can check the electrolyte level. The electrolyte level should be between LOWER and UPPER. If the electrolyte level is low, it needs to add distilled (demineralized) water (Never add sulfuric acid or other electrolyte). When refill, be careful not to splash the battery and adjacent components. And do not overfill the battery cells. It can cause corrosion on other parts. After then ensure that tighten the cell caps. We recommend that you contact an authorized HYUNDAI dealer.

⚠ WARNING - Battery dangers

Always read the following instructions carefully when handling a battery.

Keep lighted cigarettes and all other flames or sparks away from the battery.

Hydrogen, a highly combustible gas, is always present in battery cells and may explode if ignited.

Keep batteries out of the reach of children because batteries contain highly corrosive SULFURIC ACID. Do not allow battery acid to contact your skin, eyes, clothing or paint finish.

If any electrolyte gets into your eyes, flush your eyes with clean water for at least 15 minutes and get immediate medical attention.

If electrolyte gets on your skin, thoroughly wash the contacted area.

(Continued)

(Continued)

If you feel a pain or a burning sensation, get medical attention immediately.

Wear eye protection when charging or working near a battery. Always provide ventilation when working in an enclosed space.

An inappropriately disposed battery can be harmful to the environment and human health.

Dispose the battery according to your local law(s) or regulation.

The battery contains lead. Do not dispose of it after use. Please return the battery to an authorized HYUNDAI dealer to be recycled.

- When lifting a plastic-cased battery, excessive pressure on the case may cause battery acid to leak, resulting in personal injury. Lift with a battery carrier or with your hands on opposite corners.

(Continued)

(Continued)

- Never attempt to recharge the battery when the battery cables are connected.
- The electrical ignition system works with high voltage. Never touch these components with the engine running or the ignition switched on.

Failure to follow the above warnings can result in serious bodily injury or death.

⚠ CAUTION

- *When you don't use the vehicle for a long time in the low temperature area, separate the battery and keep it indoors.*
- *Always charge the battery fully to prevent battery case damage in low temperature area.*
- *If you connect unauthorized electronic devices to the battery, the battery may be discharged. Never use unauthorized devices.*

⚠ WARNING

We recommend that the system be serviced by an authorized HYUNDAI dealer.

■ Example

OJD072039

❊ The actual battery label in the vehicle may differ from the illustration.

Battery capacity label

1. CMF60L-BCI : The HYUNDAI model name of battery
2. 12V : The nominal voltage
3. 60Ah(20HR) : The nominal capacity (in Ampere hours)
4. 92RC : The nominal reserve capacity (in min.)
5. 550CCA : The cold-test current in amperes by SAE
6. 440A : The cold-test current in amperes by EN

Battery recharging

Your vehicle has a maintenance-free, calcium-based battery.

- If the battery becomes discharged in a short time (because, for example, the headlights or interior lights were left on while the vehicle was not in use), recharge it by slow charging (trickle) for 10 hours.
- If the battery gradually discharges because of high electric load while the vehicle is being used, recharge it at 20-30A for two hours.

⚠ CAUTION - AGM battery (if equipped)

- ***Absorbent Glass Matt (AGM) batteries are maintenance-free and we recommend that the AGM battery be serviced by an authorized HYUNDAI dealer. For charging your AGM battery, use only fully automatic battery chargers that are specially developed for AGM batteries.***
- ***When replacing the AGM battery, we recommend that you use parts for replacement from an authorized HYUNDAI dealer.***
- ***Do not open or remove the cap on top of the battery. This may cause leaks of internal electrolyte that could result in severe injury.***
- ***If the AGM battery is reconnected or replaced, ISG function will not operate immediately.***

  If you want to use the ISG function, the battery sensor needs to be calibrated for approximately 4 hours with the ignition off.

⚠ WARNING - Recharging battery

When recharging the battery, observe the following precautions:

- **The battery must be removed from the vehicle and placed in an area with good ventilation.**
- **Do not allow cigarettes, sparks, or flame near the battery.**
- **Watch the battery during charging, and stop or reduce the charging rate if the battery cells begin gassing (boiling) violently or if the temperature of the electrolyte of any cell exceeds 49°C (120°F).**
- **Wear eye protection when checking the battery during charging.**
- **Disconnect the battery charger in the following order.**

1. **Turn off the battery charger main switch.**
2. **Unhook the negative clamp from the negative battery terminal.**
3. **Unhook the positive clamp from the positive battery terminal.**

⚠ WARNING

- **Before performing maintenance or recharging the battery, turn off all accessories and stop the engine.**
- **The negative battery cable must be removed first and installed last when the battery is disconnected.**

Reset items

Items should be reset after the battery has been discharged or the battery has been disconnected.

- Auto up/down window (See section 4)
- Sunroof (See section 4)
- Trip computer (See section 4)
- Climate control system (See section 4)
- Clock (See section 4)
- Audio (See section 4)

TIRES AND WHEELS

Tire care

For proper maintenance, safety, and maximum fuel economy, you must always maintain recommended tire inflation pressures and stay within the load limits and weight distribution recommended for your vehicle.

Recommended cold tire inflation pressures

All tire pressures (including the spare) should be checked when the tires are cold. “Cold Tires” means the vehicle has not been driven for at least three hours or driven less than 1.6 km (one mile).

Recommended pressures must be maintained for the best ride, top vehicle handling, and minimum tire wear.

For recommended inflation pressure, refer to “Tire and wheels” in section 8.

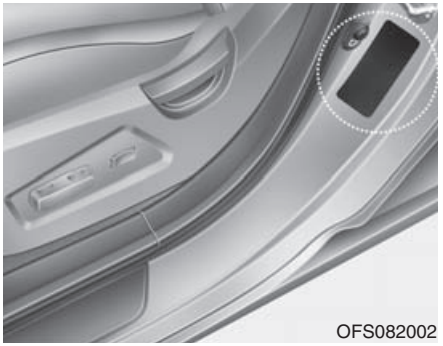
OFS082002

All specifications (sizes and pressures) can be found on a label attached to the vehicle.

⚠ WARNING - Tire underinflation

Severe underinflation (70 kPa (10 psi) or more) can lead to severe heat build-up, causing blowouts, tread separation and other tire failures that can result in the loss of vehicle control leading to severe injury or death. This risk is much higher on hot days and when driving for long periods at high speeds.

⚠ CAUTION

- ***Underinflation also results in excessive wear, poor handling and reduced fuel economy. Wheel deformation also is possible. Keep your tire pressures at the proper levels. If a tire frequently needs refilling, we recommend that the system be checked by an authorized HYUNDAI dealer.***
- ***Overinflation produces a harsh ride, excessive wear at the center of the tire tread, and a greater possibility of damage from road hazards.***

⚠ CAUTION

- ***Warm tires normally exceed recommended cold tire pressures by 28 to 41 kPa (4 to 6 psi). Do not release air from warm tires to adjust the pressure or the tires will be underinflated.***
- ***Be sure to reinstall the tire inflation valve caps. Without the valve cap, dirt or moisture could get into the valve core and cause air leakage. If a valve cap is missing, install a new one as soon as possible.***

⚠ WARNING - Tire Inflation

Overinflation or underinflation can reduce tire life, adversely affect vehicle handling, and lead to sudden tire failure. This could result in loss of vehicle control and potential injury.

⚠ CAUTION - Tire pressure

Always observe the following:

- ***Check tire pressure when the tires are cold. (After vehicle has been parked for at least three hours or hasn't been driven more than 1.6 km (one mile) since startup.)***
- ***Check the pressure of your spare tire each time you check the pressure of other tires.***
- ***Never overload your vehicle. Be careful not to overload a vehicle luggage rack if your vehicle is equipped with one.***
- ***Worn, old tires can cause accidents. If your tread is badly worn, or if your tires have been damaged, replace them.***

Checking tire inflation pressure

Check your tires once a month or more.

Also, check the tire pressure of the spare tire.

How to check

Use a good quality gage to check tire pressure. You can not tell if your tires are properly inflated simply by looking at them. Radial tires may look properly inflated even when they're underinflated.

Check the tire's inflation pressure when the tires are cold. - "Cold" means your vehicle has been sitting for at least three hours or driven no more than 1.6 km (1 mile).

Remove the valve cap from the tire valve stem. Press the tire gage firmly onto the valve to get a pressure measurement. If the cold tire inflation pressure matches the recommended pressure on the tire and loading information label, no further adjustment is necessary. If the pressure is low, add air until you reach the recommended amount.

If you overfill the tire, release air by pushing on the metal stem in the center of the tire valve. Recheck the tire pressure with the tire gage. Be sure to put the valve caps back on the valve stems. They help prevent leaks by keeping out dirt and moisture.

⚠ WARNING

- **Inspect your tires frequently for proper inflation as well as wear and damage. Always use a tire pressure gauge.**
- **Tires with too much or too little pressure wear unevenly causing poor handling, loss of vehicle control, and sudden tire failure leading to accidents, injuries, and even death. The recommended cold tire pressure for your vehicle can be found in this manual and on the tire label located on the driver's side center pillar.**
- **Worn tires can cause accidents. Replace tires that are worn, show uneven wear, or are damaged.**
- **Remember to check the pressure of your spare tire. HYUNDAI recommends that you check the spare every time you check the pressure of the other tires on your vehicle.**

Tire rotation

To equalize tread wear, it is recommended that the tires be rotated every 12,000 km (7,500 miles) or sooner if irregular wear develops.

During rotation, check the tires for correct balance.

When rotating tires, check for uneven wear and damage. Abnormal wear is usually caused by incorrect tire pressure, improper wheel alignment, out-of-balance wheels, severe braking or severe cornering. Look for bumps or bulges in the tread or side of tire. Replace the tire if you find either of these conditions. Replace the tire if fabric or cord is visible. After rotation, be sure to bring the front and rear tire pressures to specification and check lug nut tightness.

Refer to “Tire and wheels” in section 8.

With a full-size spare tire

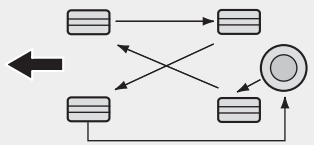

CBGQ0706

Without a spare tire or with a compact spare tire

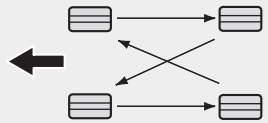

CBGQ0707

Directional tires (if equipped)

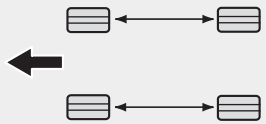

CBGQ0707A

Disc brake pads should be inspected for wear whenever tires are rotated.

✻ NOTICE

Rotate radial tires that have an asymmetric tread pattern only from front to rear and not from right to left.

⚠ WARNING

- **Do not use the compact spare tire for tire rotation.**
- **Do not mix bias ply and radial ply tires under any circumstances. This may cause unusual handling characteristics that could result in death, severe injury, or property damage.**

Wheel alignment and tire balance

The wheels on your vehicle were aligned and balanced carefully at the factory to give you the longest tire life and best overall performance.

In most cases, you will not need to have your wheels aligned again. However, if you notice unusual tire wear or your vehicle pulling one way or the other, the alignment may need to be reset.

If you notice your vehicle vibrating when driving on a smooth road, your wheels may need to be rebalanced.

⚠ CAUTION

Improper wheel weights can damage your vehicle's aluminum wheels. Use only approved wheel weights.

Tire replacement

If the tire is worn evenly, a tread wear indicator will appear as a solid band across the tread. This shows there is less than 1.6 mm (1/16 inch) of tread left on the tire. Replace the tire when this happens.

Do not wait for the band to appear across the entire tread before replacing the tire.

⚠ CAUTION

When replacing the tires, recheck and tighten the wheel nuts after driving about 1,000 km (620miles). If the steering wheel shakes or the vehicle vibrates while driving, the tire is out of balance. Align the tire balance. If the problem is not solved, we recommend that you contact an authorized HYUNDAI dealer.

⚠ WARNING - Replacing tires

To reduce the chance or serious or fatal injuries from an accident caused by tire failure or loss of vehicle control:

- **Replace tires that are worn, show uneven wear, or are damaged. Worn tires can cause loss of braking effectiveness, steering control, and traction.**
- **Do not drive your vehicle with too little or too much pressure in your tires. This can lead to uneven wear and tire failure.**
- **When replacing tires, never mix radial and bias-ply tires on the same car. You must replace all tires (including the spare) if moving from radial to bias-ply tires.**

(Continued)

(Continued)

- **Using tires and wheel other than the recommended sizes could cause unusual handling characteristics and poor vehicle control, resulting in a serious accident.**
- **Wheels that do not meet HYUNDAI's specifications may fit poorly and result in damage to the vehicle or unusual handling and poor vehicle control.**
- **The ABS works by comparing the speed of the wheels. Tire size can affect wheel speed. When replacing tires, all 4 tires must use the same size originally supplied with the vehicle. Using tires of a different size can cause the ABS (Anti-lock Brake System) and ESC (Electronic Stability Control) to work irregularly. (if equipped)**

Compact spare tire replacement (if equipped)

A compact spare tire has a shorter tread life than a regular size tire. Replace it when you can see the tread wear indicator bars on the tire. The replaced compact spare tire should be the same size and design tire as the one provided with your new vehicle and should be mounted on the same compact spare tire wheel. The compact spare tire is not designed to be mounted on a regular size wheel, and the compact spare tire wheel is not designed to mount a regular size tire.

Wheel replacement

When replacing the metal wheels for any reason, make sure the new wheels are equivalent to the original factory units in diameter, rim width and offset.

⚠ WARNING

A wheel that is not the correct size may adversely affect wheel and bearing life, braking and stopping abilities, handling characteristics, ground clearance, body-to-tire clearance, snow chain clearance, speedometer and odometer calibration, headlight aim and bumper height.

Tire traction

Tire traction can be reduced if you drive on worn tires, tires that are improperly inflated or on slippery road surfaces. Tires should be replaced when tread wear indicators appear. Slow down whenever there is rain, snow or ice on the road, to reduce the possibility of losing control of the vehicle.

Tire maintenance

In addition to proper inflation, correct wheel alignment helps decrease tire wear. If you find a tire worn unevenly, have your dealer check the wheel alignment.

When you have new tires installed, make sure they are balanced. This will increase vehicle ride comfort and tire life. Additionally, a tire should always be rebalanced if it is removed from the wheel.

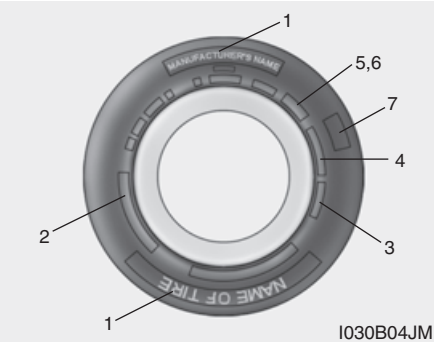

Tire sidewall labeling

This information identifies and describes the fundamental characteristics of the tire and also provides the tire identification number (TIN) for safety standard certification. The TIN can be used to identify the tire in case of a recall.

1. Manufacturer or brand name

Manufacturer or Brand name is shown.

2. Tire size designation

A tire's sidewall is marked with a tire size designation. You will need this information when selecting replacement tires for your car. The following explains what the letters and numbers in the tire size designation mean.

Example tire size designation:

(These numbers are provided as an example only; your tire size designator could vary depending on your vehicle.)

P205/55R16 91H

P - Applicable vehicle type (tires marked with the prefix "P" are intended for use on passenger cars or light trucks; however, not all tires have this marking).

205 - Tire width in millimeters.

55 - Aspect ratio. The tire's section height as a percentage of its width.

R - Tire construction code (Radial).

16 - Rim diameter in inches.

91 - Load Index, a numerical code associated with the maximum load the tire can carry.

H - Speed Rating Symbol. See the speed rating chart in this section for additional information.

Wheel size designation

Wheels are also marked with important information that you need if you ever have to replace one. The following explains what the letters and numbers in the wheel size designation mean.

Example wheel size designation:

6.0JX16

6.0 - Rim width in inches.

J - Rim contour designation.

16 - Rim diameter in inches.

Tire speed ratings

The chart below lists many of the different speed ratings currently being used for passenger car tires. The speed rating is part of the tire size designation on the sidewall of the tire. This symbol corresponds to that tire's designed maximum safe operating speed.

Speed Rating Symbol	Maximum Speed
S	180 km/h (112 mph)
T	190 km/h (118 mph)
H	210 km/h (130 mph)
V	240 km/h (149 mph)
Z	Above 240 km/h (149 mph)
W*	270 km/h (168 mph)

* W speed rating is sub-category of the Z speed rating.

3. Checking tire life (TIN : Tire Identification Number)

Any tires that are over 6 years old, based on the manufacturing date, (including the spare tire) should be replaced by new ones. You can find the manufacturing date on the tire sidewall (possibly on the inside of the wheel), displaying the DOT Code. The DOT Code is a series of numbers on a tire consisting of numbers and English letters. The manufacturing date is designated by the last four digits (characters) of the DOT code.

DOT : XXXX XXXX OOOO

The front part of the DOT means a plant code number, tire size and tread pattern and the last four numbers indicate week and year manufactured.

For example:

DOT XXXX XXXX 1614 represents that the tire was produced in the 16th week of 2014.

⚠ WARNING - Tire age

Tires degrade over time, even when they are not being used.

Regardless of the remaining tread, it is recommended that tires generally be replaced after six (6) years of normal service. Heat caused by hot climates or frequent high loading conditions can accelerate the aging process. Failure to follow this warning could cause sudden tire failure, which could lead to a loss of control and an accident involving serious injury or death.

4. Tire ply composition and material

The number of layers or plies of rubber-coated fabric in the tire. Tire manufacturers also must indicate the materials in the tire, which include steel, nylon, polyester, and others. The letter "R" means radial ply construction; the letter "D" means diagonal or bias ply construction; and the letter "B" means belted-bias ply construction.

5. Maximum permissible inflation pressure

This number is the greatest amount of air pressure that should be put in the tire. Do not exceed the maximum permissible inflation pressure. Refer to the Tire and Loading Information label for recommended inflation pressure.

6. Maximum load rating

This number indicates the maximum load in kilograms and pounds that can be carried by the tire. When replacing the tires on the vehicle, always use a tire that has the same load rating as the factory installed tire.

7. Uniform tire quality grading

Quality grades can be found where applicable on the tire sidewall between tread shoulder and maximum section width.

For example:

TREAD wear 200

TRACTION AA

TEMPERATURE A

Tread wear

The tread wear grade is a comparative rating based on the wear rate of the tire when tested under controlled conditions on a specified government test course. For example, a tire graded 150 would wear one-and-a-half times (1½) as well on the government course as a tire graded 100.

The relative performance of tires depends upon the actual conditions of their use, however, and may depart significantly from the norm due to variations in driving habits, service practices and differences in road characteristics and climate.

These grades are molded on the side-walls of passenger vehicle tires. The tires available as standard or optional equipment on your vehicle may vary with respect to grade.

Traction - AA, A, B & C

The traction grades, from highest to lowest, are AA, A, B and C. Those grades represent the tire's ability to stop on wet pavement measured under controlled conditions on specified government test surfaces of asphalt and concrete. A tire marked C may have poor traction performance.

⚠ WARNING

The traction grade assigned to this tire is based on straight-ahead braking traction tests, and does not include acceleration, cornering, hydroplaning, or peak traction characteristics.

Temperature -A, B & C

The temperature grades are A (the highest), B, and C, representing the tire's resistance to the generation of heat and its ability to dissipate heat when tested under controlled conditions on a specified indoor laboratory test wheel.

Sustained high temperature can cause the material of the tire to degenerate and reduce tire life, and excessive temperature can lead to sudden tire failure. Grades B and A represent higher levels of performance on the laboratory test wheel than the minimum required by law.

⚠ WARNING - Tire temperature

The temperature grade for this tire is established for a tire that is properly inflated and not overloaded. Excessive speed, underinflation, or excessive loading, either separately or in combination, can cause heat build-up and sudden tire failure. This can cause loss of vehicle control and serious injury or death.

Low aspect ratio tire (if equipped)

Low aspect ratio tires, whose aspect ratio is lower than 50, are provided for sporty looks.

Because the low aspect ratio tires are optimized for handling and braking, it may be more uncomfortable to ride in and there is more noise compare with normal tires.

⚠ **CAUTION**

Because the sidewall of the low aspect ratio tire is shorter than the normal, the wheel and tire of the low aspect ratio tire is easier to be damaged. So, follow the instructions below.

- ***When driving on a rough road or off road, drive cautiously because tires and wheels may be damaged. And after driving, inspect tires and wheels.***
- ***When passing over a pothole, speed bump, manhole, or curb stone, drive slowly so that the tires and wheels are not damaged.***
- ***If the tire is impacted, we recommend that you inspect the tire condition or contact an authorized HYUNDAI dealer.***
- ***To prevent damage to the tire, inspect the tire condition and pressure every 3,000km.***

⚠ **CAUTION**

- ***It is not easy to recognize the tire damage with your own eyes. But if there is the slightest hint of tire damage, even though you cannot see the tire damage with your own eyes, have the tire checked or replaced because the tire damage may cause air leakage from the tire.***
- ***If the tire is damaged by driving on a rough road, off road, pothole, manhole, or curb stone, it will not be covered by the warranty.***
- ***You can find out the tire information on the tire sidewall.***

FUSES

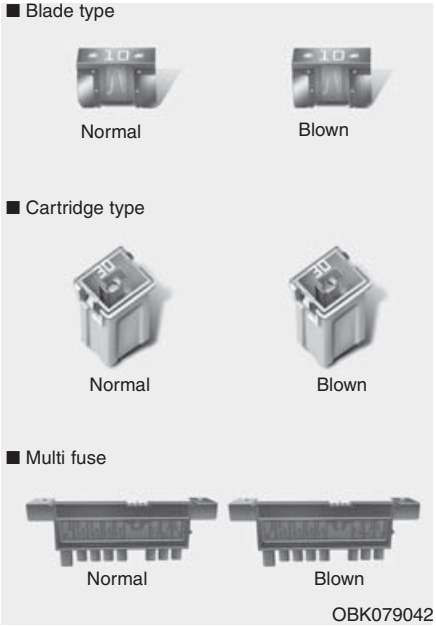

A vehicle's electrical system is protected from electrical overload damage by fuses.

This vehicle has 2 (or 3) fuse panels, one located in the driver's side panel bolster, the other in the engine compartment near the battery.

If any of your vehicle's lights, accessories, or controls do not work, check the appropriate circuit fuse. If a fuse has blown, the element inside the fuse will be melted.

If the electrical system does not work, first check the driver's side fuse panel.

Before replacing a blown fuse, disconnect the negative battery cable.

Always replace a blown fuse with one of the same rating.

If the replacement fuse blows, this indicates an electrical problem. Avoid using the system involved and we recommend that you consult an authorized HYUNDAI dealer.

Three kinds of fuses are used: blade type for lower amperage rating, cartridge type and multi fuse for higher amperage ratings.

⚠ WARNING - Fuse replacement

- **Never replace a fuse with anything but another fuse of the same rating.**
- **A higher capacity fuse could cause damage and possibly a fire.**
- **Never install a wire or aluminum foil instead of the proper fuse - even as a temporary repair. It may cause extensive wiring damage and a possible fire.**

⚠ CAUTION

Do not use a screwdriver or any other metal object to remove fuses because it may cause a short circuit and damage the system.

✻ NOTICE

The actual fuse/relay panel label may differ from equipped items.

⚠ **CAUTION**

- ***When replacing a blown fuse or relay with a new one, make sure the new fuse or relay fits tightly into the clips. The incomplete fastening fuse or relay may cause the vehicle wiring and electric systems damage and a possible fire.***
- ***Do not remove fuses, relays and terminals fastened with bolts or nuts. The fuses, relays and terminals may be fastened incompletely, and it may cause a possible fire. If fuses, relays and terminals fastened with bolts or nuts are blown, consult with an authorized HYUNDAI dealer.***
- ***Do not input any other objects except fuses or relays into fuse/relay terminals such as a driver or wiring. It may cause contact failure and system malfunction.***

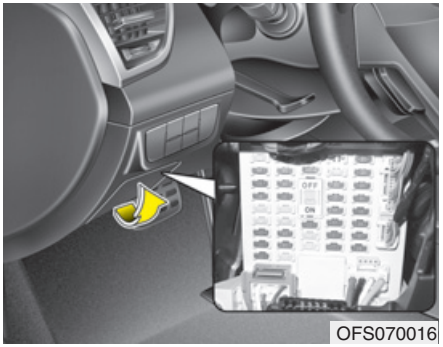

OFS070016

Instrument panel fuse replacement

1. Turn the ignition switch and all other switches off.
2. Open the fuse panel cover.

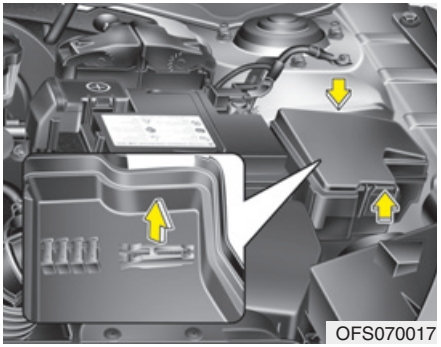
OFS070017

3. Pull the suspected fuse straight out. Use the removal tool provided in the engine compartment fuse panel cover.
4. Check the removed fuse; replace it if it is blown.
5. Push in a new fuse of the same rating, and make sure it fits tightly in the clips.

If it fits loosely, we recommend that you consult an authorized HYUNDAI dealer.

If you do not have a spare, use a fuse of the same rating from a circuit you may not need for operating the vehicle, such as the cigarette lighter fuse.

If the headlights or other electrical components do not work and the fuses are OK, check the fuse panel in the engine compartment. If a fuse is blown, it must be replaced.

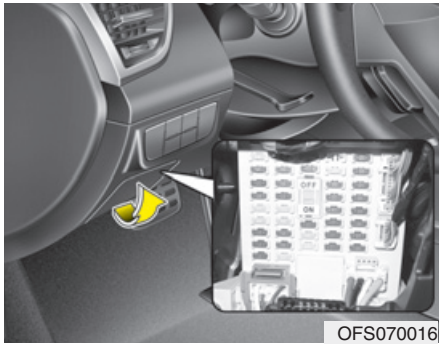

Fuse switch

Always, put the fuse switch at the ON position.

If you move the switch to the OFF position, some items must be reset and transmitter (or smart key) may not work properly.

⚠ CAUTION

Always place the fuse switch in the ON position while driving the vehicle.

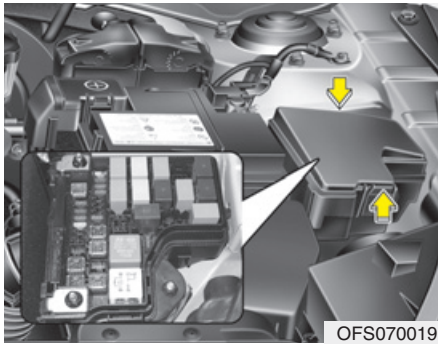

Engine compartment panel fuse replacement

1. Turn the ignition switch and all other switches off.
2. Remove the fuse box cover by pressing the tab and pulling up the cover.

3. Check the removed fuse; replace it if it is blown. To remove or insert the fuse, use the fuse puller in the engine compartment fuse panel.
4. Push in a new fuse of the same rating, and make sure it fits tightly in the clips. If it fits loosely, we recommend that you consult an authorized HYUNDAI dealer.

⚠ CAUTION

After checking the fuse panel in the engine compartment, securely install the fuse panel cover. If not, electrical failures may occur from water leaking in.

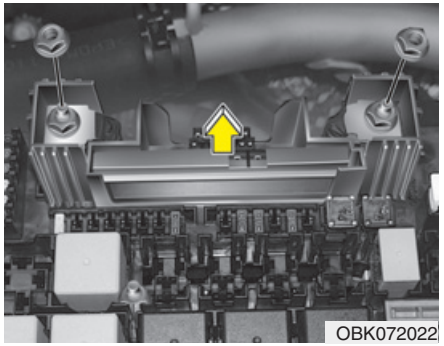

Main fuse

If the main fuse is blown, it must be removed as follows:

1. Disconnect the negative battery cable.
2. Remove the nuts shown in the picture above.
3. Replace the fuse with a new one of the same rating.
4. Reinstall in the reverse order of removal.

✻ NOTICE

If the multi fuse is blown, we recommend that you consult an authorized HYUNDAI dealer.

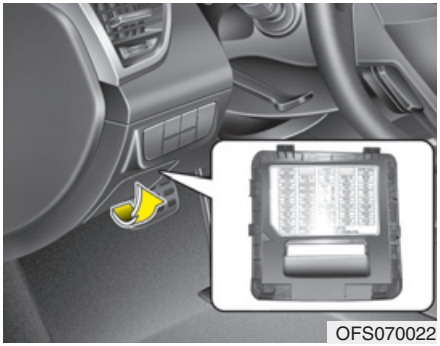
OFS070022

Fuse/relay panel description

Inner fuse panel

Inside the fuse/relay panel covers, you can find the fuse/relay label describing fuse/relay name and capacity.

✻ NOTICE

Not all fuse panel descriptions in this manual may be applicable to your vehicle, the information is accurate at the time of printing. When you inspect the fuse panel in your vehicle, refer to the fuse panel label.

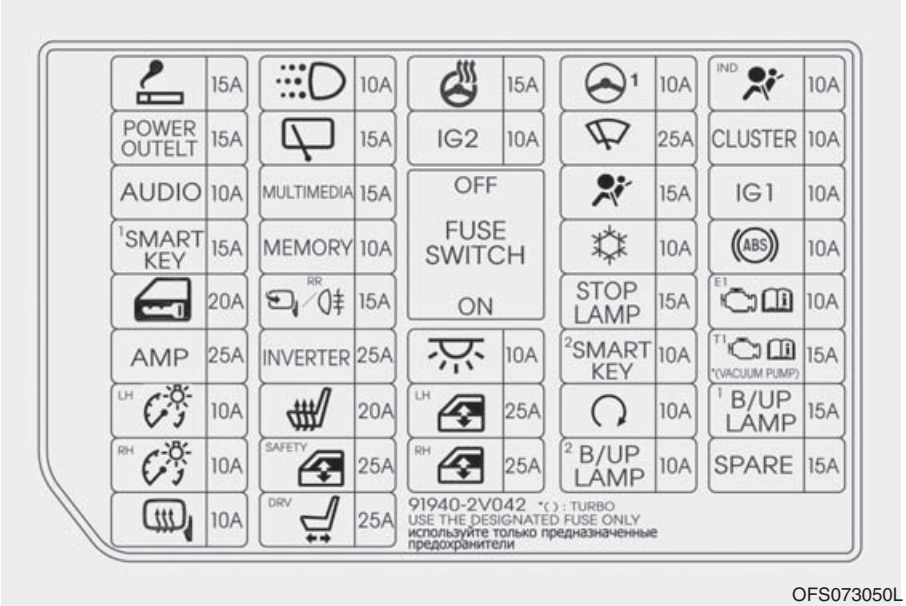

OFS073050L

Inner fuse panel

Fuse name	Symbol	Fuse rating	Protected Component
C/LIGHTER		15A	Cigarette Lighter
DRL		10A	DRL Relay
HTD STRG		15A	DC-DC Converter, DC-DC Converter (AMP), Smart Key Control Module, STEER'G WHEEL HEATED
MDPS	1	10A	EPS Control Module
A/BAG IND	IND	10A	Instrument Cluster
POWER OUTLET	POWER OUTLET	15A	Power Outlet
WIPER RR		15A	Engine Room Fuse & Relay Box (RLY. 5), Rear Wiper Motor, Multifunction Switch
IG2	IG 2	10A	Engine Room Fuse & Relay Box (RLY. 10, RLY. 3), Crash Pad Switch, Panaroma Sunroof Motor, A/C Control Module, Driver/Passenger Seat Vent
WIPER FRT		25A	Multifunction Switch, Front Wiper Motor, Engine Room Fuse & Relay Box (RLY. 10)
CLUSTER	CLUSTER	10A	Instrument Cluster, Tire Pressure Monitoring Module, Sport Mode Switch
AUDIO	AUDIO	10A	Power Outside Mirror Switch, AMP, A/V & Navigation Head Unit, DC-DC Converter, DC-DC Converter (AMP), Smart Key Control Module
MULTIMEDIA	MULTIMEDIA	15A	DC-DC Converter, A/V & Navigation Head Unit
A/BAG		15A	PAB ON/OFF IND. & SBR Switch, SRS Control Module

Fuse name	Symbol	Fuse rating	Protected Component
IG1	IG 1	10A	Rear Parking Assist Sensor LH/RH, Rear Parking Assist Sensor LH/RH (Center), Rear Parking Assist Buzzer, SBR Switch, Head Lamp Leveling Device Switch, Driver/Passenger Seat Warmer, Driver/Passenger Seat Warmer Switch, Driver Seat Warmer Module, Head Lamp Leveling Device Actuator LH/RH, Driver/Passenger Seat Vent, Driver/Passenger Seat Vent Switch, A/C Control Mode
SMART KEY1	1SMART KEY	15A	Smart Key Control Module
MEMORY	MEMORY	10A	Data Link Connector, Instrument Cluster, A/C Control Module
A/CON		10A	ECM
ABS	ABS	10A	ESC Control Module, ESC OFF Switch, Engine Room Fuse & Relay Box (RLY. 14, Multipurpose Check Connector)
DR LOCK		20A	Door Lock Relay, Door Unlock Relay, Flasher Sound Relay, Tail Gate Latch Relay, Dead Lock Relay (RHD)
FOLD'G MIRR/FOG LAMP RR	RR	15A	Power Outside Mirror Switch, Rear Fog Lamp Relay
STOP LAMP	STOP LAMP	15A	Stop Lamp Switch, Stop Signal Relay, Smart Key Control Module
ECU1	E1	10A	Immobilizer Module, Smart Key Control Module, ECM, Stop Lamp Switch
AMP	AMP	25A	AMP, DC-DC Converter (AMP)
INVERTER	INVERTER	25A	-
INTERIOR LAMP		10A	Luggage Lamp , Map Lamp, Room Lamp, Vanity Lamp LH/RH, Overhead Console Lamp, Glove Box Lamp

Fuse name	Symbol	Fuse rating	Protected Component
SMART KEY2	2SMART KEY	10A	Smart Key Control Module, Immobilizer Module, Start Stop Button Switch
TCU/* (VACUUM PUMP)	T1 *(VACUUM PUMP)	15A	TCM (Engine Room Fuse & Relay Box (VACCUM PUMP))
TAIL LAMP LH	LH	10A	Rear Combination Lamp LH, License Lamp LH/RH, ATM Lever Indicator,Instrument Cluster, Multifunction Switch, Passenger Power Window Switch, Power Window Main Switch, AUX & USB Jack, A/C Control Module, ESC OFF Switch, A/V & Navigation Head Unit, Crash Pad Switch, Driver/Passenger Seat Warmer Switch, Head Lamp Leveling Device Switch, Head Lamp LH, Driver/Passenger Seat Vent Switch
S/HEATER		20A	Driver Seat Warmer Module, Driver/Passenger Seat Warmer, Driver/Passenger Seat Vent
P/WDW LH	LH	25A	Rear Power Window Switch LH, Power Window Main Switch
START		10A	Burglar Alarm Relay, Transaxle Range Switch, ECM, Engine Room Fuse & Relay Box (RLY. 8), TCM
B/UP LAMP1	1 B/UP LAMP	15A	Back-Up Lamp Switch, Transaxle Range Switch
TAIL LAMP RH	RH	10A	Head Lamp RH, Rear Combination Lamp RH
SAFETY POWER WINDOW	SAFETY	25A	Driver Safety Power Window Module
P/WDW RH	RH	25A	Power Window Main Switch, Passenger Power Window Switch, Rear Power Window Switch RH

Fuse name	Symbol	Fuse rating	Protected Component
B/UP LAMP2	2 B/UP LAMP	10A	A/V & Navigation Head Unit, Transaxle Range Switch, TCM, Back-Up Lamp Switch, Rear Combination Lamp LH/RH
SPARE	SPARE	15A	-
HTD MIRR		10A	ECM, A/C Control Module, Driver/Passenger Power Outside Mirror
P/SEAT DRV	DRV	25A	Driver Seat Manual Switch, Lumber Support

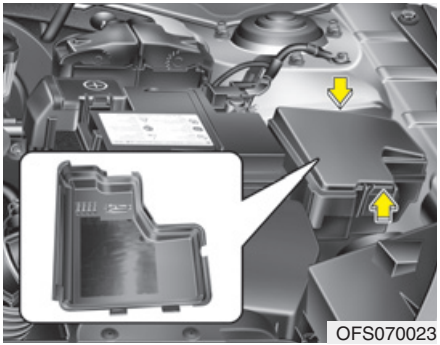

Engine compartment fuse panel

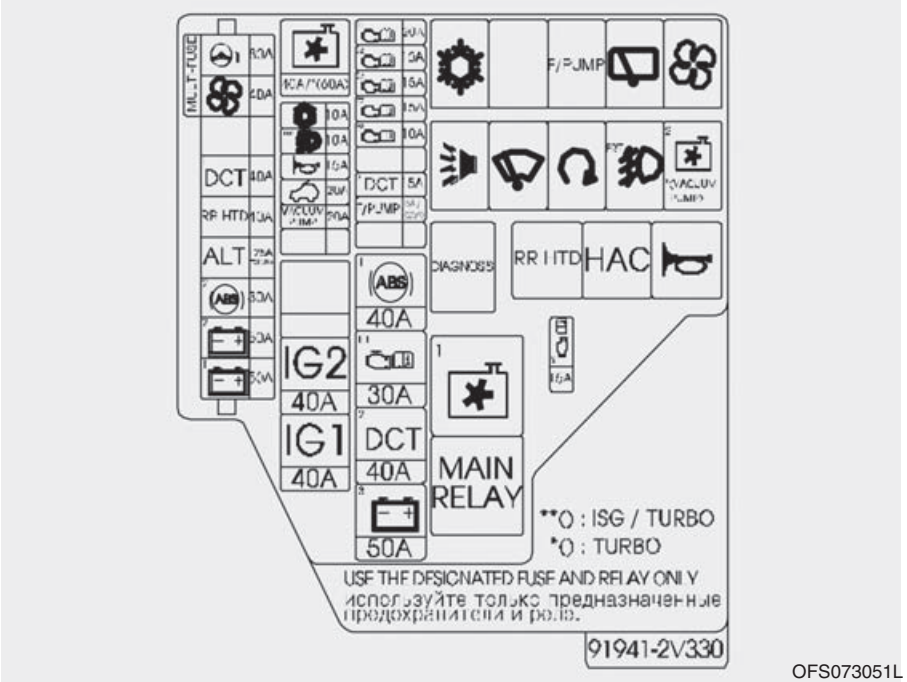

Engine compartment fuse panel

	Fuse name	Symbol	Fuse rating		Protected Component
MULTI FUSE	MDPS	1	80A		EPS Control Module
	BLOWER		40A		Blower Motor
	[1]DCT	[1] DCT	40A	GDI	TCM (G4FD-DCT)
	RR HTD	RR HTD	40A		Engine Room Fuse & Relay Box (RLY. 15)
	ALT	ALT	125A	With out ISG	Engine Room Fuse & Relay Box (Multi Fuse), Alternator
			150A	With ISG or T-GDI	
	ABS2	[2] ABS	30A		Multipurpose Check Connector, ESC Control Module
	B+2	[2]	50A		Smart Junction Box(Power Window Relay, ARISU-LT, FUSE - F34, F23)
	B+1	[1]	50A		Leak Current Autocut Device (Leak Current Autocut Relay, Leak Current Autocut Switch, FUSE - F25, F12, F16), FUSE-F20, F39, F29
FUSE	C/FAN		40A	GDI/MPI	Engine Room Fuse & Relay Box (RLY. 1, RLY. 4)
			60A	T-GDI	
	A/CON		10A		Engine Room Fuse & Relay Box (RLY. 11)
	FOG LP FRT	FRT	10A		Engine Room Fuse & Relay Box (RLY. 6)
	HORN		15A		Engine Room Fuse & Relay Box (RLY. 12, RLY. 13)
	SUNROOF		20A		Panorama Sunroof Motor

	Fuse name	Symbol	Fusa rating		Protected Component
FUSE	VACUUM PUMP	VACUUM PUMP	20A	T-GDI	Engine Room Fuse & Relay Box (VACCUM PUMP RELAY)
	IG2	IG 2	40A		Ignition Switch, PDM Relay Box (IG 2 Relay), Engine Room Fuse & Relay Box (RLY. 8)
	IG1	IG 1	40A		Ignition Switch, PDM Relay Box (IG 1 Relay, ACC Relay)
	SENSOR1	S1	20A		ECM
	SENSOR2	S2	10A	GDI/MPI	Oxygen Sensor (Up)/(Down), Variable Intake Solenoid Valve, Purge Control Solenoid Valve, Engine Room Fuse & Relay Box(Cooling Fan (High/Low) Relay)
				T-GDI	Oxygen Sensor (Up)/(Down), Recirulation valve, Waste gate valve, Purge Control Solenoid Valve, Engine Room Fuse & Relay Box (Cooling Fan (High) Relay)
	SENSOR3	S3	15A		Engine Room Fuse & Relay Box (Fuel Pump Relay), Engine Room Fuse & Relay Box (A/CON Relay), Oil Control Valve #1 (Intake)/#2 (Exhaust), ECM
	ECU2	E2	15A		TCM (G4FC), ECM (G4FD)
	ECU3	E3	10A		Sport Mode Switch, Key Solenoid
	DCT3	3 DCT	15A	GDI	TCM (G4FD-DCT)
	F/PUMP	F/PUMP	15A	GDI/MPI	Engine Room Fuse & Relay Box (RLY. 7)
			20A	T-GDI	
	ABS1	1 ABS	40A		ESC Control Module
	ECU1	E1	30A		Engine Room Fuse & Relay Box (Engine Conrol Relay, Fuse - ECU 2)

	Fuse name	Symbol	Fuse rating		Protected Component
FUSE	2DCT	2 DCT	40A	GDI	TCM (G4FD-DCT)
	B+3	3	50A		Smart Junction Box (Tail Lamp Relay, Fuse - F21, F15, F19, F24, F26, ARISU-RT)
	ECU4	E4	15A		Condenser, Ignition Coil #1/#2/#3/#4

LIGHT BULBS

⚠ WARNING - Working on the lights

Prior to working on the light, firmly apply the parking brake, ensure that the ignition switch is turned to the LOCK position and turn off the lights to avoid sudden movement of the vehicle and burning your fingers or receiving an electric shock.

Use only the bulbs of the specified wattage.

⚠ CAUTION

Be sure to replace the burned-out bulb with one of the same wattage rating. Otherwise, it may cause damage to the fuse or electric wiring system.

⚠ CAUTION

If you don't have necessary tools, the correct bulbs and the expertise, we recommend that you consult an authorized HYUNDAI dealer. In many cases, it is difficult to replace vehicle light bulbs because other parts of the vehicle must be removed before you can get to the bulb. This is especially true if you have to remove the headlight assembly to get to the bulb(s).

Removing/installing the headlight assembly can result in damage to the vehicle.

✻ NOTICE

After heavy, driving rain or washing, headlight and taillight lenses could appear frosty. This condition is caused by the temperature difference between the lamp inside and outside. This is similar to the condensation on your windows inside your vehicle during the rain and doesn't indicate a problem with your vehicle. If the water leaks into the lamp bulb circuitry, we recommend that the system be checked by an authorized HYUNDAI dealer.

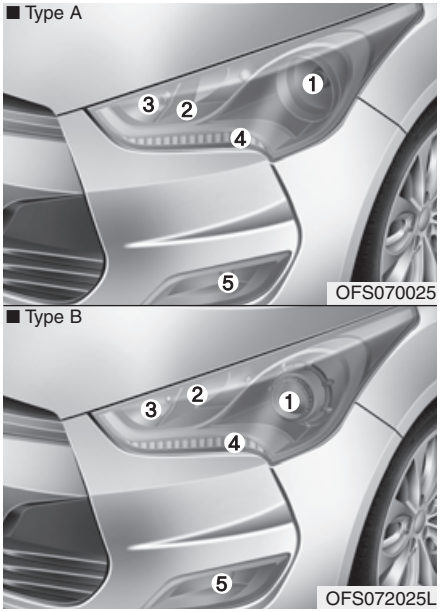

Headlight, position light, turn signal light, front fog light bulb replacement

(1) Headlight (Low)
(2) Headlight (High)
(3) Front turn signal light
(4) Position/DRL light
(5) Front fog light*

* if equipped

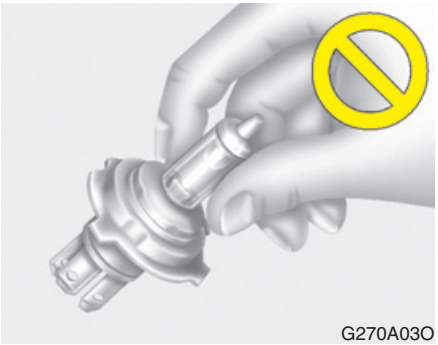

Headlight bulb

⚠ WARNING - Halogen bulbs

- **Halogen bulbs contain pressurized gas that will produce flying pieces of glass if broken.**
- **Always handle them carefully, and avoid scratches and abrasions. If the bulbs are lit, avoid contact with liquids. Never touch the glass with bare hands. Residual oil may cause the bulb to overheat and burst when lit. A bulb should be operated only when installed in a headlight.**

(Continued)

(Continued)

- **If a bulb becomes damaged or cracked, replace it immediately and carefully dispose of it.**
- **Wear eye protection when changing a bulb. Allow the bulb to cool down before handling it.**

✻ NOTICE

We recommend that the headlight aiming be adjusted after an accident or after the headlight assembly is reinstalled at an authorized HYUNDAI dealer.

❋ Traffic Change (For Europe)

The low beam light distribution is asymmetric. If you go abroad to a country with opposite traffic direction, this asymmetric part will dazzle oncoming car driver. To prevent dazzle, ECE regulation demand several technical solutions (ex. automatic change system, adhesive tape, down aiming). This headlamps are designed to be achieved by rotating 2~3 revolutions the leveling device gear counterclockwise with a screw driver (OVM tool).

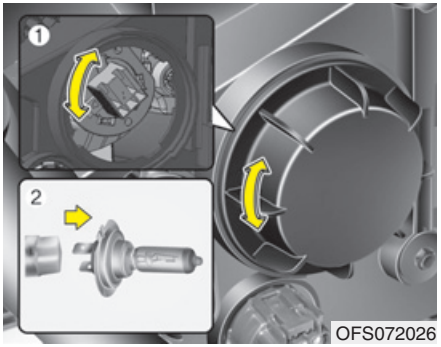

OFS072026

1. Open the hood.
2. Remove the headlight bulb cover by turning it counterclockwise.
3. Remove the bulb from the headlight assembly.
4. Install a new headlight bulb.
5. Connect the headlight bulb socket connector.
6. Install the headlight bulb cover by turning it clockwise.

Position light (if equipped)

If the light is not operating, we recommend that you checked an authorized HYUNDAI dealer.

Turn signal light

1. Remove the bulb from the socket by pressing it in and rotating it counter-clockwise until the tabs on the bulb align with the slots in the socket. Pull the bulb out of the socket.
2. Insert a new bulb by inserting it into the socket and rotating it until it locks into place.
3. Install the socket in the assembly by aligning the tabs on the socket with the slots in the assembly. Push the socket into the assembly and turn the socket clockwise.

Front fog light bulbs (if equipped)

1. Remove the under cover by rotating the screws.
2. Reach your hand into the back of the front bumper.
3. Disconnect the power connector from the socket.
4. Remove the bulb-socket from the housing by turning the socket counter clockwise until the tabs on the socket align with the slots on the housing.
5. Install the new bulb-socket into the housing by aligning the tabs on the socket with the slots in the housing. Push the socket into the housing and turn the socket clockwise.
6. Connect the power connector to the socket.

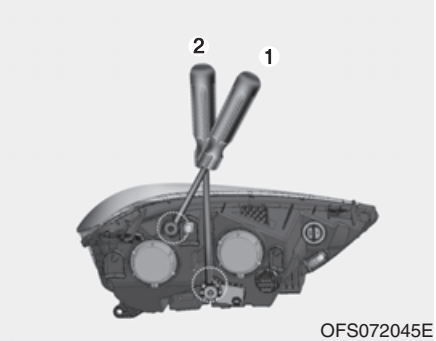

OFS072045E

Headlight and front fog light aiming

Headlight aiming

1. Inflate the tires to the specified pressure and remove any loads from the vehicle except the driver, spare tire, and tools.
2. The vehicle should be placed on a flat floor.
3. Draw vertical lines (Vertical lines passing through respective head lamp centers) and a horizontal line (Horizontal line passing through center of head lamps) on the screen.
4. With the head lamp and battery in normal condition, aim the head lamps so the brightest portion falls on the horizontal and vertical lines.
5. To aim the low beam left or right, turn the driver (1) clockwise or counterclockwise. To aim the low and high beam up or down, turn the driver (2) clockwise or counterclockwise.

OFS072046L

Front fog light aiming

The front fog lamp can be aimed as the same manner of the head lamps aiming.

With the front fog lamps and battery normal condition, aim the front fog lamps. To aim the front fog lamp up or down, turn the driver (1) clockwise or counterclockwise.

Aiming point

<Ground Height>

<Distance between lamps>

H1 : Height between the head lamp bulb center and ground (Low beam)
H2 : Height between the head lamp bulb center and ground (High beam)
H3 : Height between the fog lamp bulb center and ground
W1 : Distance between the two head lamp bulbs centers (Low beam)
W2 : Distance between the two head lamp bulbs centers (High beam)
W3 : Distance between the two fog lamp bulbs centers

GDI/MPI

Unit: mm (in)

Vehicle condition	H1	H2	H3	W1	W2	W3
Without driver	733 (28.9)	729 (28.7)	366 (14.4)	1,476 (58.1)	1,196 (47.1)	1,386 (54.6)
With driver	726 (28.6)	722 (28.4)	359 (14.1)			

T-GDI

Vehicle condition	H1	H2	H3	W1	W2	W3
Without driver	730 (28.7)	728 (28.7)	376 (14.8)	1,476 (58.1)	1,196 (47.1)	1,429 (56.3)
With driver	723 (28.5)	721 (28.4)	366 (14.4)			

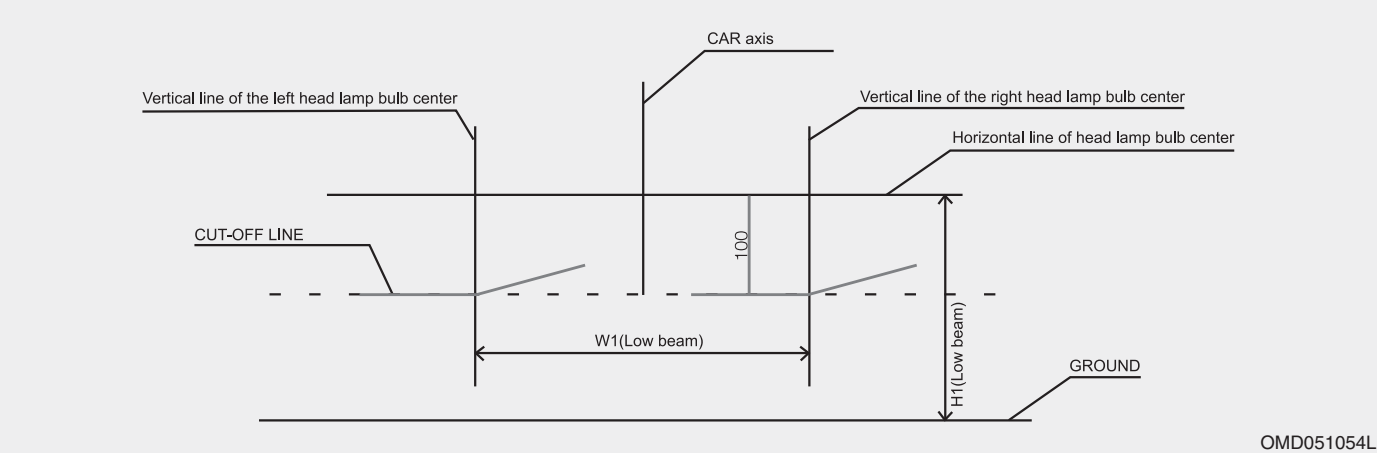

Head lamp low beam (driver's side)

1. Turn the low beam on without driver aboard.
2. The cut-off line should be projected in the cut-off line shown in the picture.
3. When aiming the low beam, vertical aiming should be adjusted after adjusting the horizontal aiming.
4. If head lamp leveling device is equipped, adjust the head lamp leveling device switch with 0 positions.

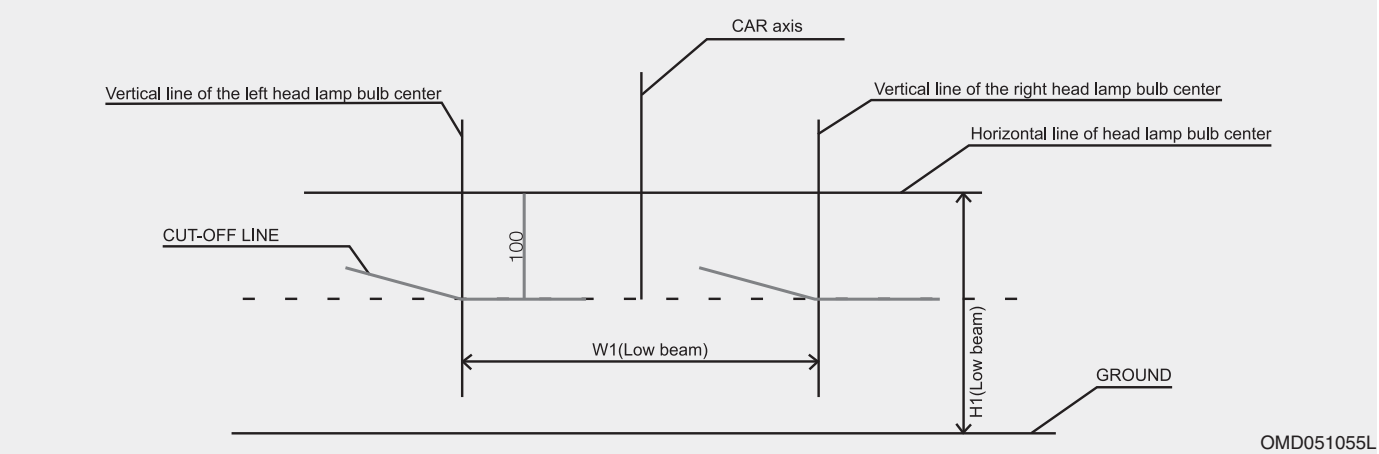

Head lamp low beam (front passenger's side)

1. Turn the low beam on without driver aboard.
2. The cut-off line should be projected in the cut-off line shown in the picture.
3. When aiming the low beam, vertical aiming should be adjusted after adjusting the horizontal aiming.
4. If head lamp leveling device is equipped, adjust the head lamp leveling device switch with 0 positions.

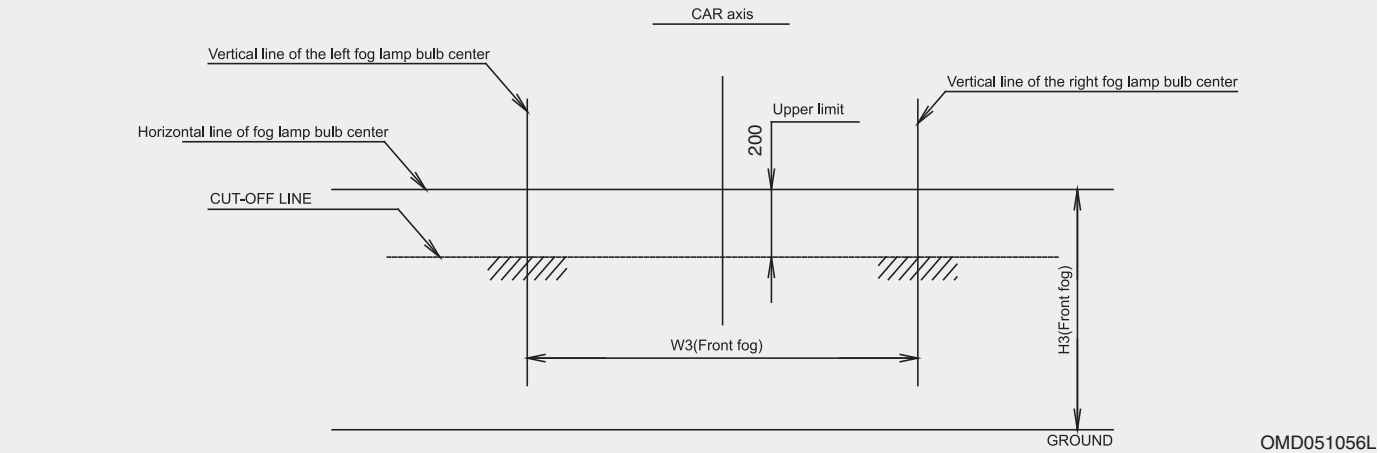

Front fog light

1. Turn the front fog lamp on without the driver aboard.
2. The cut-off line should be projected in the allowable range (shaded region).

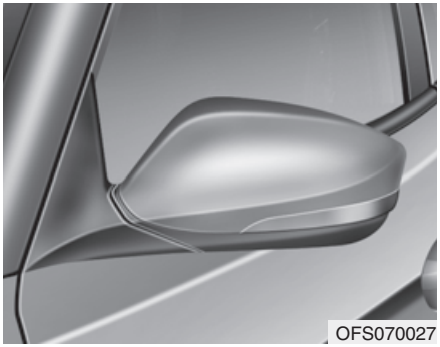

Side repeater light bulb replacement

If the light bulb does not operate, we recommend that you checked an authorized HYUNDAI dealer.

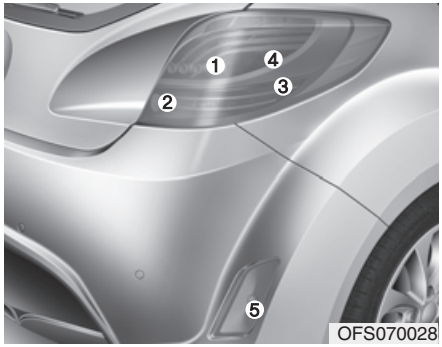

Rear combination light bulb replacement

(1) Stop and tail light
(2) Back-up light
(3) Rear turn signal light
(4) Tail light
(5) Rear fog light* and reflex reflector light

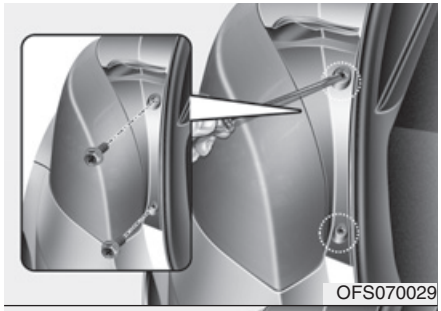

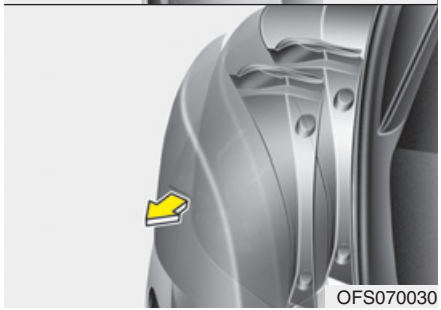

Outside

1. Open the tailgate.
2. Loosen the outside light assembly retaining screws with a cross-tip screwdriver.
3. Remove the rear combination light assembly from the body of the vehicle.

4. Remove the socket from the assembly by turning the socket counterclockwise until the tabs on the socket align with the slots on the assembly.
5. Remove the bulb from the socket.
6. Insert a new bulb by inserting it into the socket and pushing or rotating it until it locks into place.
7. Install the socket in the assembly by aligning the tabs on the socket with the slots in the assembly. Push the socket into the assembly and turn the socket clockwise.
8. Reinstall the light assembly to the body of the vehicle.
9. Tighten the screws.

Rear fog light

1. Reach your hand into the back of the rear bumper.
2. Remove the socket from the assembly by turning the socket counterclockwise until the tabs on the socket align with the slots on the assembly.
3. Remove the bulb from the socket by pressing it in and rotating it counter-clockwise until the tabs on the bulb align with the slots in the socket. Pull the bulb out of the socket.
4. Insert a new bulb in the socket.
5. Reinstall the light assembly to the body of the vehicle.

High mounted stop light replacement (if equipped)

If the light is not operating, we recommend that you checked an authorized HYUNDAI dealer.

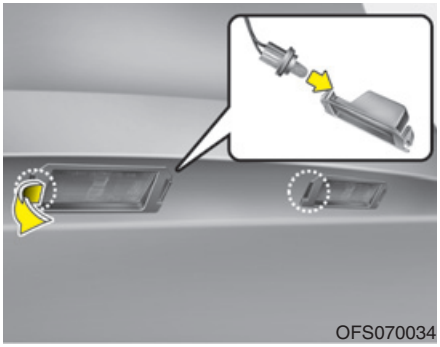

License plate light bulb replacement

⚠ **CAUTION**

Be careful when removing the plastic mounting clips in cold weather, it may crack.

1. Remove the license lamp assembly from bumper trim by removing the plastic mounting clips.
2. Remove the bulb socket by turning it counterclockwise.
3. Remove the bulb by pulling it straight out.
4. Install a new bulb.
5. Install the bulb socket by turning it clockwise.
6. Install the license lamp assembly to the bumper trim.

■ Front map lamp

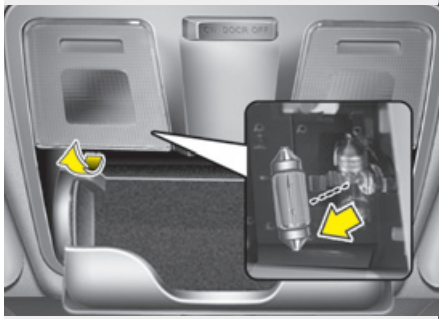

■ Center room lamp

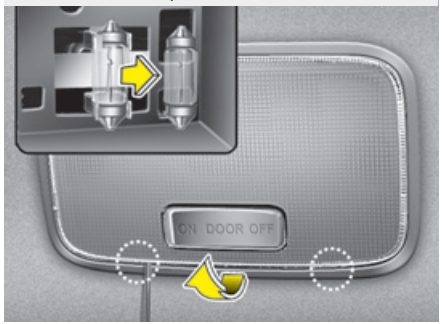

■ Luggage room lamp

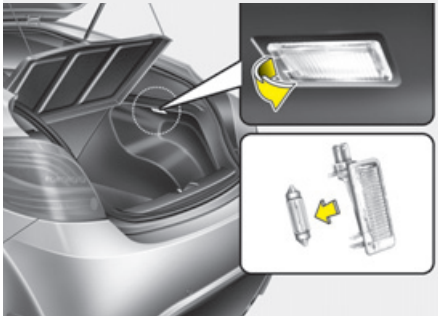

OMD070044/ORB070064/OFS070035

Interior light bulb replacement

1. Using a flat-blade screwdriver, gently pry the lens from the interior light housing.
2. Remove the bulb by pulling it straight out.

⚠ WARNING

Prior to working on the Interior Lights, ensure that the "OFF" button is depressed to avoid burning your fingers or receiving an electric shock.

3. Install a new bulb in the socket.
4. Align the lens tabs with the interior light housing notches and snap the lens into place.

⚠ CAUTION

Use care not to dirty or damage lens, lens tab, and plastic housings.

APPEARANCE CARE

Exterior care

Exterior general caution

It is very important to follow the label directions when using any chemical cleaner or polish. Read all warning and caution statements that appear on the label.

Finish maintenance

Washing

To help protect your vehicle's finish from rust and deterioration, wash it thoroughly and frequently at least once a month with lukewarm or cold water.

If you use your vehicle for off-road driving, you should wash it after each off-road trip. Pay special attention to the removal of any accumulation of salt, dirt, mud, and other foreign materials. Make sure the drain holes in the lower edges of the doors and rocker panels are kept clear and clean.

Insects, tar, tree sap, bird droppings, industrial pollution and similar deposits can damage your vehicle's finish if not removed immediately.

Even prompt washing with plain water may not completely remove all these deposits. A mild soap, safe for use on painted surfaces, may be used.

After washing, rinse the vehicle thoroughly with lukewarm or cold water. Do not allow soap to dry on the finish.

⚠ CAUTION

- ***Do not use strong soap, chemical detergents or hot water, and do not wash the vehicle in direct sunlight or when the body of the vehicle is warm.***
- ***Be careful when washing the side windows of your vehicle. Especially, with high-pressure water, water may leak through the windows and wet the interior.***
- ***To prevent damage to the plastic parts and lamps, do not clean with chemical solvents or strong detergents.***

⚠ WARNING - Wet brakes

After washing the vehicle, test the brakes while driving slowly to see if they have been affected by water. If braking performance is impaired, dry the brakes by applying them lightly while maintaining a slow forward speed.

⚠ CAUTION - MATT PAINT FINISH

If your vehicle paintwork is manufactured with a matt finish, make certain you both maintain it properly to preserve the matt appearance and adhere to the following recommendations:

IMPORTANT - The normal paint warranty applies to defects in material and/or workmanship, but not the matt appearance or its consistency.

Automatic car wash which uses rotating brushes must not be used as this can affect the matt appearance.

- *Rub marks, burnish marks, and shiny spots are likely to require repainting at a body shop specialising in matt paint repair.*
- *Test all products on a less visible area (such as the engine bay) to make certain they do not affect the matt appearance.*
- *Hand wash the vehicle only; only use a soft cloth, dry with a clean chamois, and only use light pressure using a microfiber towel. Always minimize the pressure you use.*

(Continued)

(Continued)

Do not rub the paint finish repeatedly, failure to adhere to this will burnish the paint as will using a coarse material cloth.

- *Pre-rinse the paint prior to washing to remove coarse dirt that can scratch the paint. Pressure washing is OK with a fan nozzle operated at a distance of a minimum of 10 inches between the nozzle and paint.*
- *Use a detergent specifically formulated for matt paint.*
- *Use a shampoo made for matt paint.*
- *Spot treat heavy dirt accumulation with a cleaner made for matt paint.*
- *Most solvent based tar and bug remover products can be used, followed by an alcohol/water or paint cleaner. Test in a less visible area before using.*
- *Most waxes and paint sealers will add gloss, and are often very difficult or impossible to remove.*
- *Special waxes and sealers made for matt paint do offer protection from insects, bird droppings, and contaminations, but may affect the appearance. If used the complete vehicle has to be treated to maintain a uniform finish. Test in a less visible area before using.*

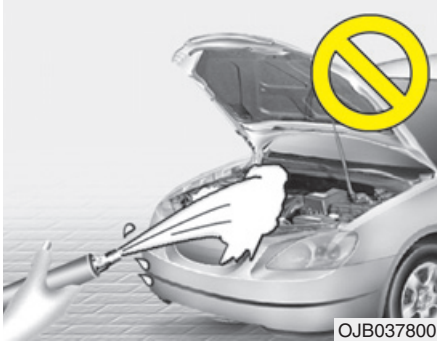
OJB037800

⚠ CAUTION

- *Water washing in the engine compartment including high pressure water washing may cause the failure of electrical circuits located in the engine compartment.*
- *Never allow water or other liquids to come in contact with electrical/electronic components inside the vehicle as this may damage them.*

Waxing

Wax the vehicle when water will no longer bead on the paint.

Always wash and dry the vehicle before waxing. Use a good quality liquid or paste wax, and follow the manufacturer's instructions. Wax all metal trim to protect it and to maintain its luster.

Removing oil, tar, and similar materials with a spot remover will usually strip the wax from the finish. Be sure to re-wax these areas even if the rest of the vehicle does not yet need waxing.

⚠ CAUTION

- ***Wiping dust or dirt off the body with a dry cloth will scratch the finish.***
- ***Do not use steel wool, abrasive cleaners, or strong detergents containing highly alkaline or caustic agents on chrome-plated or anodized aluminum parts. This may result in damage to the protective coating and cause discoloration or paint deterioration.***

Finish damage repair

Deep scratches or stone chips in the painted surface must be repaired promptly. Exposed metal will quickly rust and may develop into a major repair expense.

✻ NOTICE

If your vehicle is damaged and requires any metal repair or replacement, be sure the body shop applies anti-corrosion materials to the parts repaired or replaced.

Bright-metal maintenance

- To remove road tar and insects, use a tar remover, not a scraper or other sharp object.
- To protect the surfaces of bright-metal parts from corrosion, apply a coating of wax or chrome preservative and rub to a high luster.
- During winter weather or in coastal areas, cover the bright metal parts with a heavier coating of wax or preservative. If necessary, coat the parts with non-corrosive petroleum jelly or other protective compound.

Underbody maintenance

Corrosive materials used for ice and snow removal and dust control may collect on the underbody. If these materials are not removed, accelerated rusting can occur on the underbody parts such as the fuel lines, frame, floor pan and exhaust system, even though they have been treated with rust protection.

Thoroughly flush the vehicle underbody and wheel openings with lukewarm or cold water once a month, after off-road driving and at the end of each winter. Pay special attention to these areas because it is difficult to see all the mud and dirt. It will do more harm than good to wet down the road grime without removing it. The lower edges of the doors, rocker panels, and frame members have drain holes that should not clog with dirt; trapped water in these areas can cause rusting.

⚠ WARNING

After washing the vehicle, test the brakes while driving slowly to see if they have been affected by water. If braking performance is impaired, dry the brakes by applying them lightly while maintaining a slow forward speed.

Aluminum wheel maintenance

The aluminum wheels are coated with a clear protective finish.

- Do not use any abrasive cleaner, polishing compound, solvent, or wire brushes on aluminum wheels. They may scratch or damage the finish.
- Clean the wheel when it has cooled.
- Use only a mild soap or neutral detergent, and rinse thoroughly with water. Also, be sure to clean the wheels after driving on salted roads. This helps prevent corrosion.
- Avoid washing the wheels with high-speed car wash brushes.
- Do not use any alkaline or acid detergent. It may damage and corrode the aluminum wheels coated with a clear protective finish.

Corrosion protection

Protecting your vehicle from corrosion

By using the most advanced design and construction practices to combat corrosion, we produce vehicles of the highest quality. However, this is only part of the job. To achieve the long-term corrosion resistance your vehicle can deliver, the owner's cooperation and assistance is also required.

Common causes of corrosion

The most common causes of corrosion on your vehicle are:

- Road salt, dirt and moisture that is allowed to accumulate underneath the vehicle.
- Removal of paint or protective coatings by stones, gravel, abrasion or minor scrapes and dents which leave unprotected metal exposed to corrosion.

High-corrosion areas

If you live in an area where your vehicle is regularly exposed to corrosive materials, corrosion protection is particularly important. Some of the common causes of accelerated corrosion are road salts, dust control chemicals, ocean air and industrial pollution.

Moisture breeds corrosion

Moisture creates the conditions in which corrosion is most likely to occur. For example, corrosion is accelerated by high humidity, particularly when temperatures are just above freezing. In such conditions, the corrosive material is kept in contact with the vehicle’s surface by moisture that slowly evaporates.

Mud is particularly corrosive because it dries slowly and holds moisture in contact with the vehicle. Although the mud appears to be dry, it can still retain moisture and promote corrosion.

High temperatures can also accelerate corrosion of parts that are not properly ventilated so the moisture can be dispersed. For all these reasons, it is particularly important to keep your vehicle clean and free of mud or accumulations of other materials. This applies not only to the visible surfaces but particularly to the underside of the vehicle.

To help prevent corrosion

You can help prevent corrosion from getting started by observing the following:

Keep your vehicle clean

The best way to prevent corrosion is to keep your vehicle clean and free of corrosive materials. Attention to the underside of the vehicle is particularly important.

- If you live in a high-corrosion area — where road salts are used, near the ocean, areas with industrial pollution, acid rain, etc.—, you should take extra care to prevent corrosion. In winter, hose off the underside of your vehicle at least once a month and be sure to clean the underside thoroughly when winter is over.
- When cleaning underneath the vehicle, give particular attention to the components under the fenders and other areas that are hidden from view. Do a thorough job; just dampening the accumulated mud rather than washing it away will accelerate corrosion rather than prevent it. Water under high pressure and steam are particularly effective in removing accumulated mud and corrosive materials.
- When cleaning lower door panels, rocker panels and frame members, be sure that drain holes are kept open so that moisture can escape and not be trapped inside to accelerate corrosion.

Keep your garage dry

Don't park your vehicle in a damp, poorly ventilated garage. This creates a favorable environment for corrosion. This is particularly true if you wash your vehicle in the garage or drive it into the garage when it is still wet or covered with snow, ice or mud. Even a heated garage can contribute to corrosion unless it is well ventilated so moisture is dispersed.

Keep paint and trim in good condition

Scratches or chips in the finish should be covered with "touch-up" paint as soon as possible to reduce the possibility of corrosion. If bare metal is showing through, the attention of a qualified body and paint shop is recommended.

Bird droppings : Bird droppings are highly corrosive and may damage painted surfaces in just a few hours. Always remove bird droppings as soon as possible.

Don't neglect the interior

Moisture can collect under the floor mats and carpeting and cause corrosion. Check under the mats periodically to be sure the carpeting is dry. Use particular care if you carry fertilizers, cleaning materials or chemicals in the vehicle.

These should be carried only in proper containers and any spills or leaks should be cleaned up, flushed with clean water and thoroughly dried.

Interior care

Interior general precautions

Prevent chemicals such as perfume, cosmetic oil, sun cream, hand cleaner, and air freshener from contacting the interior parts because they may cause damage or discoloration. If they do contact the interior parts, wipe them off immediately. See the instructions for the proper way to clean vinyl.

⚠ CAUTION

Never allow water or other liquids to come in contact with electrical/electronic components inside the vehicle as this may damage them.

⚠ CAUTION

When cleaning leather products (steering wheel, seats etc.), use neutral detergents or low alcohol content solutions. If you use high alcohol content solutions or acid/alkaline detergents, the color of the leather may fade or the surface may get stripped off.

Cleaning the upholstery and interior trim

Vinyl

Remove dust and loose dirt from vinyl with a whisk broom or vacuum cleaner. Clean vinyl surfaces with a vinyl cleaner.

Fabric

Remove dust and loose dirt from fabric with a whisk broom or vacuum cleaner. Clean with a mild soap solution recommended for upholstery or carpets. Remove fresh spots immediately with a fabric spot cleaner. If fresh spots do not receive immediate attention, the fabric can be stained and its color can be affected. Also, its fire-resistant properties can be reduced if the material is not properly maintained.

⚠ CAUTION

Using anything but recommended cleaners and procedures may affect the fabric's appearance and fire-resistant properties.

Cleaning the lap/shoulder belt webbing

Clean the belt webbing with any mild soap solution recommended for cleaning upholstery or carpet. Follow the instructions provided with the soap. Do not bleach or re-dye the webbing because this may weaken it.

Cleaning the interior window glass

If the interior glass surfaces of the vehicle become fogged (that is, covered with an oily, greasy or waxy film), they should be cleaned with glass cleaner. Follow the directions on the glass cleaner container.

⚠ CAUTION

Do not scrape or scratch the inside of the rear window. This may result in damage to the rear window defroster grid.

EMISSION CONTROL SYSTEM

The emission control system of your vehicle is covered by a written limited warranty. Please see the warranty information contained in the Service Passport in your vehicle.

Your vehicle is equipped with an emission control system to meet all emission regulations.

There are three emission control systems which are as follows.

(1) Crankcase emission control system
(2) Evaporative emission control system
(3) Exhaust emission control system

In order to assure the proper function of the emission control systems, it is recommended that you have your vehicle inspected and maintained by an authorized HYUNDAI dealer in accordance with the maintenance schedule in this manual.

Caution for the Inspection and Maintenance Test (With Electronic Stability Control (ESC) system)

- **To prevent the vehicle from misfiring during dynamometer testing, turn the Electronic Stability Control (ESC) system off by pressing the ESC switch.**
- **After dynamometer testing is completed, turn the ESC system back on by pressing the ESC switch again.**

1. Crankcase emission control system

The positive crankcase ventilation system is employed to prevent air pollution caused by blow-by gases being emitted from the crankcase. This system supplies fresh filtered air to the crankcase through the air intake hose. Inside the crankcase, the fresh air mixes with blow-by gases, which then pass through the PCV valve into the induction system.

2. Evaporative emission control system

The Evaporative Emission Control System is designed to prevent fuel vapors from escaping into the atmosphere.

Canister

Fuel vapors generated inside the fuel tank are absorbed and stored in the onboard canister. When the engine is running, the fuel vapors absorbed in the canister are drawn into the surge tank through the purge control solenoid valve.

Purge Control Solenoid Valve (PCSV)

The purge control solenoid valve is controlled by the Engine Control Module (ECM); when the engine coolant temperature is low during idling, the PCSV closes so that evaporated fuel is not taken into the engine. After the engine warms up during ordinary driving, the PCSV opens to introduce evaporated fuel to the engine.

3. Exhaust emission control system

The Exhaust Emission Control System is a highly effective system which controls exhaust emissions while maintaining good vehicle performance.

Vehicle modifications

- This vehicle should not be modified. Modification of your vehicle could affect its performance, safety or durability and may even violate governmental safety and emissions regulations.

  In addition, damage or performance problems resulting from any modification may not be covered under warranty.
- If you use unauthorized electronic devices, it may cause the vehicle to operate abnormally, wire damage, battery discharge and fire. For your safety, do not use unauthorized electronic devices.

Engine exhaust gas precautions (carbon monoxide)

- Carbon monoxide can be present with other exhaust fumes. Therefore, if you smell exhaust fumes of any kind inside your vehicle, have it inspected and repaired immediately. If you ever suspect exhaust fumes are coming into your vehicle, drive it only with all the windows fully open. Have your vehicle checked and repaired immediately.

⚠ WARNING - Exhaust

Engine exhaust gases contain carbon monoxide (CO). Though colorless and odorless, it is dangerous and could be lethal if inhaled. Follow the instructions on this page to avoid CO poisoning.

- Do not operate the engine in confined or closed areas (such as garages) any more than what is necessary to move the vehicle in or out of the area.
- When the vehicle is stopped in an open area for more than a short time with the engine running, adjust the ventilation system (as needed) to draw outside air into the vehicle.
- Never sit in a parked or stopped vehicle for any extended time with the engine running.
- When the engine stalls or fails to start, excessive attempts to restart the engine may cause damage to the emission control system.

Operating precautions for catalytic converters (if equipped)

⚠ WARNING - Fire

- **A hot exhaust system can ignite flammable items under your vehicle. Do not park, idle, or drive the vehicle over or near flammable objects, such as grass, vegetation, paper, leaves, etc.**
- **The exhaust system and catalytic system are very hot while the engine is running or immediately after the engine is turned off. Keep away from the exhaust system and catalytic, you may get burned. Also, do not remove the heat sink around the exhaust system, do not seal the bottom of the vehicle or do not coat the vehicle for corrosion control. It may present a fire risk under certain conditions.**
- **When the engine is running or turning off, do not touch catalytic system and other exhaust systems because it is hot. If you touch that, you may be burned.**

Your vehicle is equipped with a catalytic converter emission control device.

Therefore, the following precautions must be observed:

- Use only UNLEADED FUEL for gasoline engine.
- Do not operate the vehicle when there are signs of engine malfunction, such as misfire or a noticeable loss of performance.
- Do not misuse or abuse the engine. Examples of misuse are coasting with the ignition off and descending steep grades in gear with the ignition off.
- Do not operate the engine at high idle speed for extended periods (5 minutes or more).
- Do not modify or tamper with any part of the engine or emission control system. We recommend that the system be inspected by an authorized HYUNDAI dealer.
- Avoid driving with a extremely low fuel level. Running out of fuel could cause the engine to misfire, damaging the catalytic converter.

Failure to observe these precautions could result in damage to the catalytic converter and to your vehicle. Additionally, such actions could void your warranties.

Engine / 8-2
Dimensions / 8-2
Bulb wattage / 8-2
Tires and wheels / 8-3
Load and speed capacity tires / 8-4
Weight/Volume / 8-4
Recommended lubricants and capacities / 8-5
Vehicle identification number (VIN) / 8-8
Vehicle certification label / 8-8
Tire specification and pressure label / 8-9
Engine number / 8-9
Air conditioner compressor label / 8-9
Declaration of conformity / 8-10

Specifications & Consumer information 8

ENGINE

Item		Gasoline 1.6
Displacement	cc (cu. in)	1591 (97.09)
Bore x Stroke	mm (in.)	77x85.44 (3.03x3.36)
Firing order		1-3-4-2
No. of cylinders		4, In-line

DIMENSIONS

Item		mm (in.)	
		GDI/MPI	T-GDI
Overall length		4220 (166.1)	4250 (167.3)
Overall width		1790 (70.5)	1805 (71.1)
Overall height		1399 (55.1)	1399 (55.1) - For Europe
			1409 (55.5) - Except Europe
Front tread	215/45 R17	1561 (61.5)	-
	215/40 R18	1557 (61.3)	1557 (61.3)
Rear tread	215/45 R17	1574 (62.0)	-
	215/40 R18	1570 (61.8)	1570 (61.8)
Wheelbase		2650 (104.3)	2650 (104.3)

BULB WATTAGE

Light Bulb		Wattage	Bulb type
Headlights	High	55	H7
	Low	55	H7
Front turn signal lights		21	PY21W
Position lights/DRL*		LED	LED
Front fog lights*	GDI/MPI	27	GE881
	T-GDI	35	H8
Side repeater		LED	LED
Stop and tail lights		21/5	P21/5W
Rear turn signal lights		21	PY21W
Back-up lights*		16	W16W
Rear fog lights*	GDI/MPI	21	P21W
	T-GDI	21	H21W
High mounted stop light		LED	LED
License plate lights		5	W5W
Front map lamp		8	FESTOON 8W
Center room lamp*		8	FESTOON 8W
Luggage room lamp		5	FESTOON 5W

* : If equipped

TIRES AND WHEELS

Item	Tire size	Wheel size	Cold tire inflation pressure bar (psi,kPa)				Wheel lug nut torque kg•m (lb•ft, N•m)
			Normal load *1		Maximum load		
			Front	Rear	Front	Rear	
Full size tire	215/45R17	7.0J×17	2.2 (32, 220)	2.2 (32, 220)	2.2 (32, 220)	2.2 (32, 220)	9~11 (65~79, 88~107)
	215/40R18	7.5J×18	2.2 (32, 220)	2.2 (32, 220)	2.3 (33, 230)	2.3 (33, 230)	
Compact spare tire (if equipped)	T125/80D15	4.0T×15	4.2 (60, 420)	4.2 (60, 420)	4.2 (60, 420)	4.2 (60, 420)	
	T125/80D16	4.0T×16					

*1 Normal load : Up to 2 persons

⚠ CAUTION

When replacing tires, use the same size originally supplied with the vehicle.
Using tires of a different size can damage the related parts or make it work irregularly.

LOAD AND SPEED CAPACITY TIRES

Item	Tire size	Wheel size	Load Capacity		Speed Capacity	
			LI *1	kg	SS *2	km/h
Full size tire	215/45R17	7.0J×17	87	545	H	210
	215/45R17	7.0J×17	87	545	V	210
	215/40R18	7.5J×18	85	515	V	240
Compact spare tire (if equipped)	T125/80D15	4.0T×15	95	630	M	130
	T125/80D16	4.0T×16	97	730	M	130

*1 LI : LOAD INDEX
*2 SS : SPEED SYMBOL

❊ We recommend that you contact an authorized HYUNDAI dealer for more details.

WEIGHT/VOLUME

Item		GDI/MPI	T-GDI
Gross vehicle weight kg (lbs.)	Manual transaxle	1700 (3747.3)	1750 (3854)
	Automatic transaxle	1700 (3747.3)	1750 (3854)
	Double clutch transmission	1700 (3747.3)	1750 (3854)
Luggage volume *l* (cu ft)		440 (15.5)	

RECOMMENDED LUBRICANTS AND CAPACITIES

To help achieve proper engine and powertrain performance and durability, use only lubricants of the proper quality. The correct lubricants also help promote engine efficiency that results in improved fuel economy.

These lubricants and fluids are recommended for use in your vehicle.

Lubricant		Volume	Classification
Engine oil *1 *2 (drain and refill) Shell HELIX Motor oils	GDI	3.6 *l* (3.8 US qt.)	ACEA C2, C3, A5 or above We recommend that you use Use the engine oils approved by HYUNDAI Motor Company. (We recommend that the system be consulted by an authorized HYUNDAI dealer)
	T-GDI	4.5 *l* (4.8 US qt.)	
	MPI	3.6 *l* (3.8 US qt.)	API Service SM *3, ILSAC GF-4 or above
Engine oil consumption	Normal driving condition		MAX. 1 *l* /1500 km
	Severe driving condition		MAX. 1 *l* /1000 km
Automatic transaxle fluid	GDI/MPI	7.3 *l* (7.7 US qt.)	MICHANG ATF SP-IV SK ATF SP-IV NOCA ATF SP-IV HYUNDAI genuine ATF SP-IV
	T-GDI	7.1 *l* (7.5 US qt.)	
Manual transaxle fluid	GDI/MPI	1.8~1.9 *l* (1.90~2.01 US qt.)	API GL-4, SAE 75W-85 (HYUNDAI genuine transaxle fluid)
	T-GDI	1.9 ~ 2.0 *l* (2.01~ 2.11 US qt.)	
DCT (Double Clutch Transmission) fluid		1.9 ~ 2.0 *l* (2.01~ 2.11 US qt.)	HA SYN MTF (SK), HD SYN MTF (H.K.SHELL), GS PAO MTF (GS CALTEX), HYUNDAI Genuine transaxle fluid (API GL-4, SAE 75W/85) Use the Double Clutch Transmission fluid approved by HYUNDAI motor company. Consult an authorized HYUNDAI dealer for details.

Lubricant		Volume	Classification
Coolant	Automatic transaxle	5.2 *l* (5.5 US qt.)	Ethylene glycol base coolant for aluminum radiator
	Manual transaxle	5.0 *l* (5.28 US qt.)	
	Double clutch transmission		
Brake/Clutch fluid		0.7~0.8 *l* (0.7~0.8 US qt.)	FMVSS116 DOT-3 or DOT-4
Fuel		50 *l* (13.2 US gal.)	-

*1 : Refer to the recommended SAE viscosity numbers on the next page.

*2 : Engine oils labeled Energy Conserving Oil are now available. Along with other additional benefits, they contribute to fuel economy by reducing the amount of fuel necessary to overcome engine friction. Often, these improvements are difficult to measure in everyday driving, but in a year's time, they can offer significant cost and energy savings.

*3 : If the API service SM engine oil is not available in your country, you are able to use API service SL.

Recommended SAE viscosity number

⚠ CAUTION

Always be sure to clean the area around any filler plug, drain plug, or dipstick before checking or draining any lubricant. This is especially important in dusty or sandy areas and when the vehicle is used on unpaved roads. Cleaning the plug and dipstick areas will prevent dirt and grit from entering the engine and other mechanisms that could be damaged.

Engine oil viscosity (thickness) has an effect on fuel economy and cold weather operating (engine start and engine oil flowability). Lower viscosity engine oils can provide better fuel economy and cold weather performance, however, higher viscosity engine oils are required for satisfactory lubrication in hot weather.
Using oils of any viscosity other than those recommended could result in engine damage.
When choosing an oil, consider the range of temperature your vehicle will be operated in before the next oil change. Proceed to select the recommended oil viscosity from the chart.

Temperature Range for SAE Viscosity Numbers

Temperature										
	°C	-30	-20	-10	0	10	20	30	40	50
	(°F)	-10	0	20	40	60	80	100	120	
Gasoline Engine Oil *1 (For Europe)		5W-30, 5W-40								
Gasoline Engine Oil *2 (Except Europe)				20W-50						
				15W-40						
					10W-30					
		5W-20*3, 5W-30								
T-GDI Engine *4 (For Europe)		5W-30								
T-GDI Engine (Except Europe, Except South Africa)				20W-50						
				15W-40						
					10W-30					
		5W-40								
T-GDI Engine (For South Africa)		5W-40								

*1 : For better fuel economy, it is recommended to use the engine oil of a viscosity grade SAE 5W-30 (API Service SL, SM / ACEA A5 or above).
*2 : For better fuel economy, it is recommended to use the engine oil of a viscosity grade SAE 5W-20 (API SL, SM / ILSAC GF-4 or above). However, if the engine oil is not available in your country, select the proper engine oil using the engine oil viscosity chart.
*3 : In Middle East, do not use the engine oil of viscosity grade SAE 5W-20.
*4 : For better fuel economy, it is recommended to use the engine oil of a viscosity grade SAE 5W-30 (ACEA A5 or above).

VEHICLE IDENTIFICATION NUMBER (VIN)

■ Type A

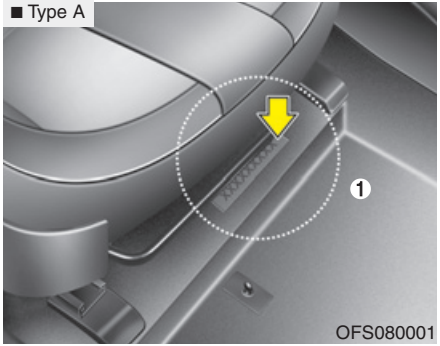

OFS080001

The vehicle identification number (VIN) is the number used in registering your car and in all legal matters pertaining to its ownership, etc.

The number is punched on the floor under the passenger seat. To check the number, remove the cover (1).

■ Type B

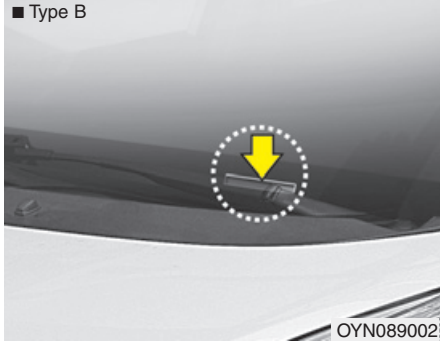

OYN089002

VIN label

The VIN is also on a plate attached to the top of the dashboard. The number on the plate can easily be seen through the windshield from outside.

VEHICLE CERTIFICATION LABEL (IF EQUIPPED)

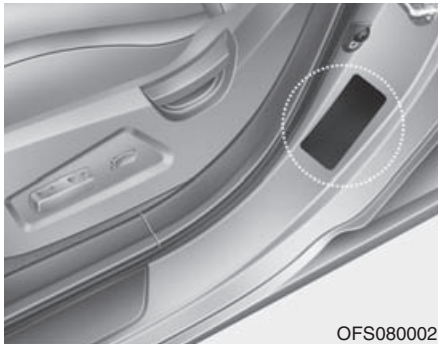

OFS080002

The vehicle certification label attached on the driver's (or front passenger's) side center pillar gives the vehicle identification number (VIN).

TIRE SPECIFICATION AND PRESSURE LABEL

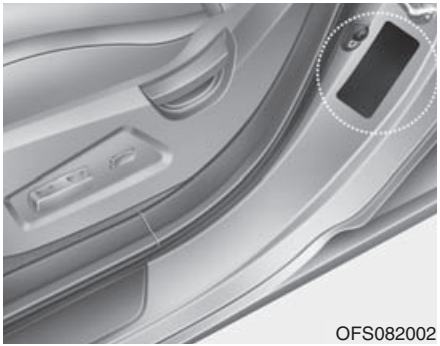

OFS082002

The tires supplied on your new vehicle are chosen to provide the best performance for normal driving.

The tire label located on the driver's side center pillar gives the tire pressures recommended for your car.

ENGINE NUMBER

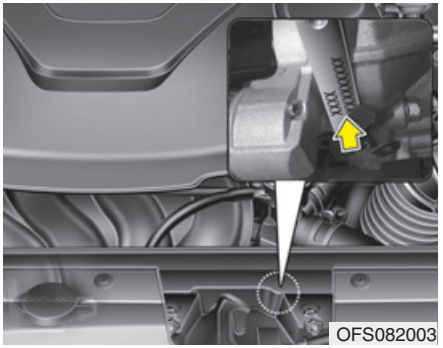

OFS082003

The engine number is stamped on the engine block as shown in the drawing.

AIR CONDITIONER COMPRESSOR LABEL

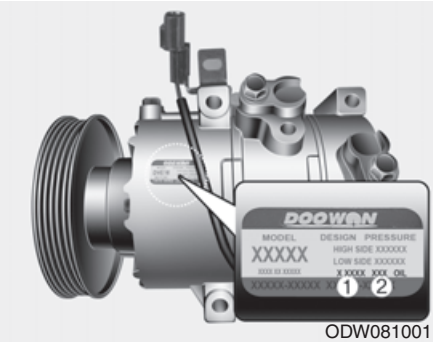

ODW081001

A compressor label informs you the type of compressor your vehicle is equipped with such as model, supplier part number, production number, refrigerant (1) and refrigerant oil (2).

DECLARATION OF CONFORMITY

■ Example

CE 0678

CE0678

The radio frequency components of the vehicle comply with requirements and other relevant provisions of Directive 1995/5/EC.

Further information including the manufacturer's declaration of conformity is available on HYUNDAI web site as follows;

http://service.hyundai-motor.com