61 01 08 (492)

Battery charge state

All models

Situation:

Due to the battery self-discharging and the vehicle's off-load current (if the battery has not been disconnected from the vehicle circuit), the vehicle's battery will slowly but continuously discharge.

If a long time passes without the battery being recharged, it will eventually result in concealed damage. This will lead to early battery failure.

To prevent damage to the battery, measures are being taken throughout the entire distribution chain (transport mode, battery charging calendar, etc.) to ensure that the battery always has a sufficient charge state.

With the new power management system from vehicle F01, the following battery charge state displays will be generated in the instrument cluster (Check-Control message) when transport mode is set:

Vehicle battery OK.

Continue to recharge the battery on store and compound vehicles regularly in accordance with the battery charging calendar.

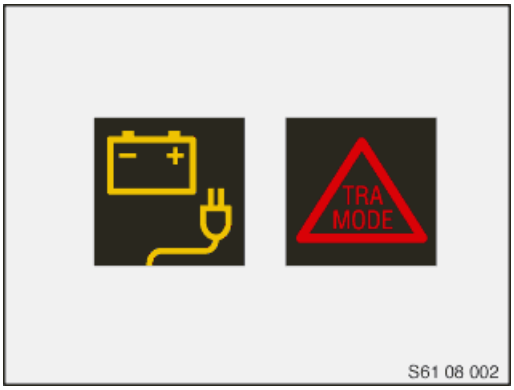

Battery charge state insufficient.

Recharge the battery without delay.

Important!

If a new vehicle is delivered through distribution chain with this display, this must be recorded in the truck delivery note and/or haulier handover report.

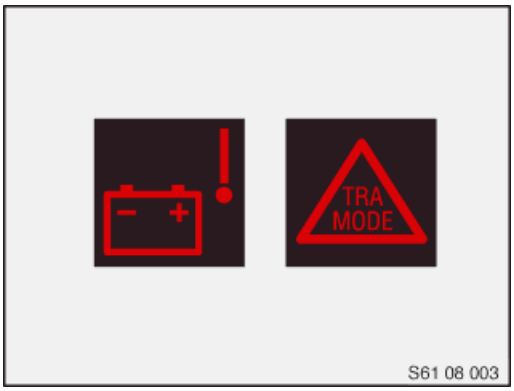

Vehicle battery damaged.

During the pre-delivery check before the vehicle is handed over to the customer renew the battery in accordance with instructions given by the BMW diagnosis system and register the battery replacement with the corresponding service function.

Important!

If a new vehicle is delivered through distribution chain with this display, this must be recorded in the truck delivery note and/or haulier handover report.

Important!

Determine the cause of the fault with the BMW diagnosis system and perform test module energy diagnosis promptly:

- If a fault is detected in the vehicle electrical system (preventing sleep mode, unauthorised reactivation, off-load current violation, alternator fault): reimbursement via warranty.

cardiagn.com

- If a handling error is determined (side lights / parking lights left on, terminal 15 on): reimbursement in the same way as for transport damage.

Reimbursement via warranty is fundamentally not possible if a handling error is determined. For this reason, vehicles must be checked on handover through the distribution chain.

cardiagn.com

61 07 02 (875)

Battery master document

All model series

Situation: The electrical system of BMW vehicles has been subject to an ongoing development process over the last few years. This has led to increased demands being placed on the battery. This document summarises all important information about how the battery should be handled in the dealership.

Procedure: The complaint "flat battery" can have various causes, most of which do not concern the battery itself. For that reason, replacing the battery will only very rarely provide a permanent solution to the problem. The cause must be properly analysed in order to perform a repair that actually rectifies the cause.

Below you will find list of the available auxiliary materials. These must be worked through step-by-step to investigate the problem. The documents listed can be accessed via hotspots.

1. Fault (cause) analysis (energy diagnosis)

Fundamentally, the following causes are possible for a breakdown resulting from a flat battery or problems in the vehicle's electrical power supply:

Vehicle faults

- Battery defective / alternator fault
- Vehicle does not "go to sleep"
- Vehicle keeps being woken up
- Excessive standby current

Operating error

- Side lights/parking lights/hazard warning flashers left on too long
- Terminal R/15 left on too long

Unreasonable driving/usage profile

An unreasonable driving profile (e.g. extremely short distances) or an unreasonable usage profile (.e.g. too long immobilisation period, use of auxiliary consumers) represents a very frequent cause of running down the battery without there being a fault with the vehicle or battery.

If in these cases the battery is not charged sufficiently during driving, a charger must be connected during the immobilisation period (recommended chargers with cable permanently connected to battery, see BMW Group Parts).

Attention!

Do not connect the chargers to the 12 V charging socket on the vehicle side. The vehicle electrical system is thus prevented from "going to sleep" and the battery from being discharged.

The installation of a larger battery or an AGM battery can be used to rectify this (if an AGM battery has not yet been installed).

Customers who have no option to connect a charger to their vehicle during the immobilisation period are recommended, as the only alternative in reaching a state of charge that is too low, to travel distances of at least 10 km.

For the following vehicles the energy diagnosis test procedure must be worked through in the event of the complaint "flat battery":

- E65, E66, E67 from model year 03/2004,
- E60, E61, E63, E64, E70, E71, E72, E81, E82, E84, E87, E88, E89, E90, E91, E92, E93,
- All F Series from F01,
- BMW i
- All MINIs from R55,
- RR04,

Note:

The aim of energy diagnosis is to identify the most probable cause for a breakdown caused by a

cardiagn.com

flat battery or for problems in the vehicle's electrical power supply. The causes listed above are stored in energy diagnosis.

To enable the applicant to use the correct defect code, make sure that both the customer's statement and the diagnosis results are adequately documented. These must be made available to the applicant.

Text search in ISTA or path: Function Structure > 03 Body > Voltage supply > Energy diagnosis

For all other model series:

For series without energy diagnosis, the customer shall be interviewed to make sure the operator errors described above can be ruled out as the cause of the battery discharging.

An on-board diagnosis is available to evaluate the battery condition of vehicles with intelligent battery sensor (IBS) or battery electronics (lithium ion battery):

- All BMW and MINI F series from series introduction
- Exception: F01, F02, F03 up to 09/2010, F04
- BMW i
- RR04

The following criteria are analysed to evaluate state of charge:

- Capacity loss
- Charge balance
- Complete discharges
- Operational energy capacity through automatic engine start-stop function (MSA)
- Water loss

The battery condition is determined for the following vehicles with intelligent battery sensor (IBS)by evaluation of the operational energy capacity and the voltage dip at engine start:

- all BMW E-series
- F01, F02, F03 up to 09/2010, F04
- all MINI R-series

For vehicles with automatic engine start-stop system, if this function is not fully available:

Important!

The prerequisite for invoicing a battery through the warranty channel is to work through the test module.

Energy diagnosis through to the diagnosis result:

- Displaying of cause
- Displaying of help instructions
- Displaying of corresponding diagnosis code

Exceptions are:

- Obvious battery damage and leakage

  Use the correct defect code in such situations (61 21 00 49 or 61 21 00 01).
- Use of BMW Group Mobile Service and battery replacement on site to restore customer mobility as quickly as possible.

2. Measure closed-circuit current

Standby current check of the 12 V battery

BMW diagnosis system (functional description):

cardiagn.com

- E38, E39, E46, E53, E83, E85,

Path: Complete vehicle > Electric motor > Voltage and current control > Voltage and current supply > Standby current measurement

- E65, E66, E67,

Path: Complete vehicle > Body > Voltage supply > Voltage and current supply > Standby current measurement > Off-load current diagnosis

- E60, E61, E63, E64, E70, E71, E72, E81, E82, E84, E87, E88, E89, E90, E91, E92, E93,
- All F Series from F01,
- BMW i
- All MINIs from R55,
- RR04,

Path: Service functions > Body > Voltage supply > Standby current

3. Check alternator

Diagnosis system (functional description):

- All except E65, E66, E67,

Path: Complete vehicle > Electric motor > Voltage and current control > Voltage and current generation

- E65, E66, E67,

Path: Complete vehicle > Body > Voltage supply > Alternator

4. Battery replacement

In the following vehicles the new battery needs to be registered via the diagnosis system:

Always:

- E65, E66, E67,
- F80, F82, F83,

Providing an intelligent battery sensor (IBS) is fitted (depends on vehicle equipment):

- E60, E61, E63, E64, E70, E71, E72, E81, E82, E84, E87, E88, E89, E90, E91, E92, E93,
- All F Series from F01,
- BMW i
- All MINIs from R55,
- RR04,

Important!

If the new battery is not registered, incorrect readings may appear in the display of the on-board computer due to previous data in the power management system (check control message "Recharge battery" appears even though the battery is new).

Only AGM batteries should be installed in the following vehicles:

- E65, E66, E67,
- F01, F02, F03, F04, F06, F07, F10, F11, F12, F13, F18,
- BMW i

cardiagn.com

- Vehicles with auxiliary heater (SA536), intelligent generator control or automatic engine start-stop function.

Only lithium ion batteries should be installed in the following vehicles:

- F80, F82, F83

5. Battery charging

5.1 Charging the lead-acid-battery or the AGM battery

- The battery may only be recharged by means of chargers that have been approved by BMW and that have a constant charging voltage of **14.8 V**.
- If possible, the battery temperature should be between 15 °C and 25 °C during charging. Under these preconditions, the battery is adequately charged when the charge current drops below 2.5 amps.
- If the battery is recharged at lower temperatures, the process should not be ended until the charge current drops below 1.5 amps.
- On vehicles with IBS, recharging the battery directly at the battery terminals could lead to a misinterpretation of the battery condition and even unwanted Check Control messages or fault entries.
- If the battery is recharged while it is installed, it must be recharged using the jump start terminal points, whenever jump start terminal points are provided in the engine compartment. Only then can you be sure that recharging is correctly recognised by the vehicle electronics on vehicles with intelligent battery sensor (IBS).

  Exception: MINI from R55: These vehicles do not have any jump start terminal points in the engine compartment.

  On these vehicles, the positive terminal of the battery charger must be directly connected to the battery. On vehicles with a petrol engine, the negative terminal can be connected to the lifting eye (suspension lug) on the transmission and on vehicles with diesel engines to a flange on the engine bearing block on the engine.

5.2 Charging the lithium ion battery

Important!

The charging voltage that is generated by existing chargers that are designed for the lead-acid or AGM battery is too high for the lithium ion battery.

This excessive charging voltage may **in some cases** result in that **the separating switch** of the lithium ion battery **will be opened**. **This does not damage the lithium ion battery.** The separator switch will close again when a charging voltage of < 14 V is applied at the battery terminals.

Before charging a lithium ion battery, adjust the charging voltage of existing charger adapters once.

- The battery may only be recharged by means of chargers that have been approved by BMW and that have a constant charging voltage of **14.0 V**.
- If possible, the battery temperature should be between 15 °C and 25 °C during charging. Under these preconditions, the battery is adequately charged when the charge current drops below 2.5 amps.
- Do not charge lithium ion battery when temperature is below 5 °C!
- The lithium ion battery can be charged via **the jump start terminal points** in the engine compartment **as well as directly on the battery terminals**.

6. Charging the high-voltage battery

Charge high-voltage battery	E72, F04
Notes on charging the high-voltage battery on standing vehicles (new and used cars)	E72, F04
Notes on charging the high-voltage battery on standing vehicles (new and used cars)	F01H, F02H, F10H, F30H

cardiagn.com

7.	**Notes on handling the high-voltage battery in the workshop**	F01H, F02H, F10H, F30H

Eighth Additional publications of the subject of "Batteries"

AGM battery - brief component description	
Notes on AGM battery	
Information on intelligent battery sensor (IBS)	
Notes on lithium ion battery	
Notes on battery electronics (lithium ion battery)	
Battery recharging intervals for stationary vehicles, battery charging calendar and battery tag	12-V battery, high-voltage battery unit
Battery log form (not for USA)	
{Battery Log Form} (for USA only)	
Notes on charging batteriesE65	
Electronic battery master switch - all model series	
Battery positive terminal with battery in luggage compartment, E36	
System battery discharges, E38/3	
Replace system battery, E38 M73	
Checking electrical connection for secondary air pump, Z3	

cardiagn.com

61 03 98 (387)

Battery recharging intervals for booth vehicles, battery charging calendars and battery tags (12-V battery, high-voltage battery unit)

All models

Situation: Due to the self-discharging of the vehicle battery (12 V battery, high-voltage battery unit) and vehicle standby current (if the vehicle battery was not disconnected from the vehicle electrical system), the vehicle battery is discharged slowly, but continuously.

If the vehicle battery is not recharged for an extended period of time, it will be damaged. This will result in a premature battery failure.

Measure: To maintain the quality of the vehicle battery in standing vehicles, it is necessary to recharge this vehicle battery regularly.

Procedure: Recharging intervals:

12V battery

All vehicles:

- 12-V battery connected to the vehicle electrical system: **6 weeks**

All vehicles without BMW i and Plug-in Hybrid (PHEV):

- Continuous disconnection of the 12-V battery from the vehicle electrical system by removal of the ground cable to the 12 V battery or by switching off of the fitted battery master switch, if installed: **12 weeks**

High-voltage battery units:

- All vehicles: **6 weeks**
- Plug-in-hybrid (PHEV): as required

The recharging intervals follow the battery charging calendar.

Recharge when the colour of the calendar week on the battery calendar matches the colour of the battery tag. Battery tags are located on all new vehicles' interior mirror.

N.B.:

1. **Since different systems are used by distribution channels for documentation, it is not always clear whether the vehicle battery was actually recharged during the week that is indicated. Therefore all recharge procedures must also be documented on the battery tag on the interior mirror (write date of recharge with a smudge-proof pen and confirm that the work has been carried out with your signature next to the date). The battery tag remains in the vehicle until the vehicle is handed over to the customer and is then filed with the vehicle records.**
2. **Dealers who store the vehicles externally (e.g. at freight forwarding businesses) are responsible for making sure that the vehicle batteries for these vehicles are recharged according to the battery charging calendar.**
3. **For vehicles in show rooms, the battery tags must be placed in the glove box. In the case of an increased draw on the charge (e.g. when doors are opened, the radio is turned on, electrical seat adjustment is operated), much shorter recharging intervals are required on these vehicles (e.g. every night) so that a total battery discharge is reliably avoided. It is however better to provide for charge compensation by means of a permanent support charge in the showroom.**

   "Trickle charger" SI 02 03 05 (205)

Parts:

Battery log form (not just for USA)

{Battery Log Form} (for USA only)

cardiagn.com

Designation	Part number	Quantity
Battery tag, coloured		
whisky	01 89 9 781 424	as needed
sun yellow	01 89 9 781 425	as needed
emerald	01 89 9 781 426	as needed
california blue	01 89 9 781 427	as needed
brick red	01 89 9 781 428	as needed
Grey	01 89 9 781 429	as needed

cardiagn.com

61 01 07 (335)

Automatic engine start-stop function

Manual gearbox

Situation: As a "BMW EfficientDynamics" measure, the automatic engine start-stop function (development code: Automatic Engine Start-Stop = MSA) helps to reduce fuel consumption and CO_2 emissions. The drive unit is switched off when the car halts e.g. at traffic lights, by engaging neutral and disengaging the clutch. To restart it, it is sufficient to operate the clutch pedal.

Vehicles concerned: Phased-in as from March 2007 in **manual gearbox** vehicles.

Note:

The automatic engine start-stop function is installed as standard on these vehicles.

Procedure: **Functional sequence ASSF (automatic engine start-stop function)**

Engine shutdown

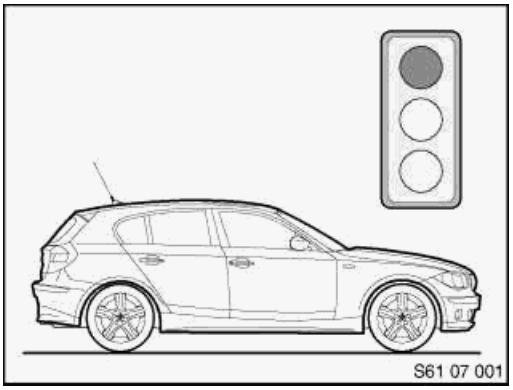

The driver brakes the vehicle to a standstill (e.g. at traffic lights).

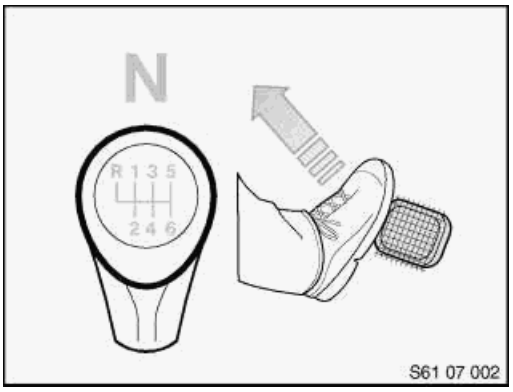

The driver engages neutral and releases the clutch.

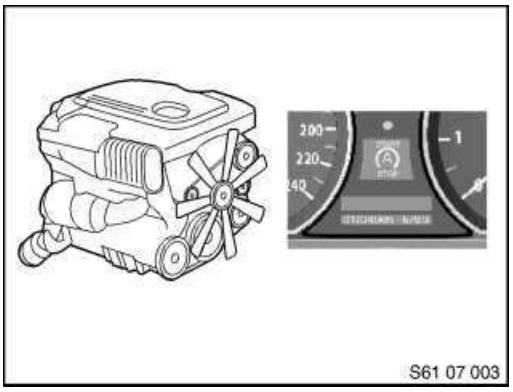

The engine cuts out automatically.

The "Start/Stop" symbol appears in the instrument panel (see "Display concept").

Engine start

The driver wishes to resume the journey.

cardiagn.com

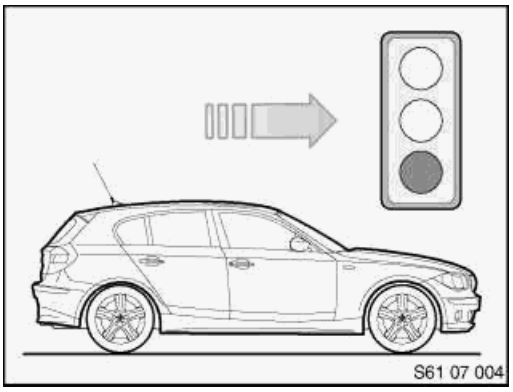

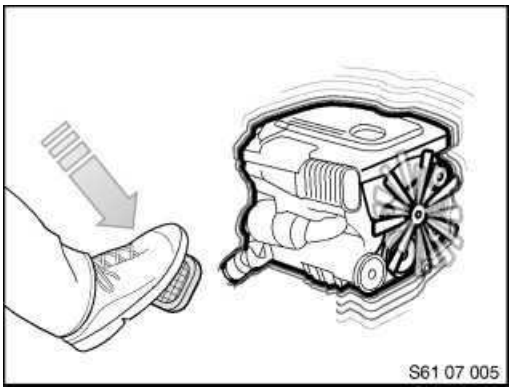

The driver presses the clutch pedal.

The engine starts.

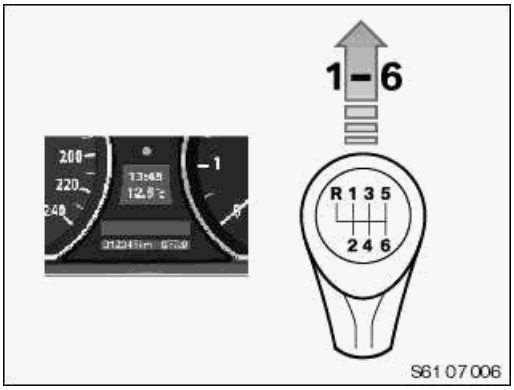

A gear can be engaged and the journey continued.

The "Start/Stop" symbol in the instrument panel goes out and the time and temperature appear (see "Display concept").

Prerequisites for an automatic engine shutdown

The automatic engine start-stop function will only stop or start the engine if certain conditions are met.

Engine shutdown

The engine is switched off when:

- The vehicle is stationary (speed < 3 kph).
- The vehicle has been driven at > 5 km/h since the engine was last stopped.
- The vehicle has been driven at 5 km/h since the last change at terminal 15.
- The manual gearbox is in neutral.
- The clutch pedal is not pressed and the steering wheel not turned (steering wheel must be aligned straight).
- The engine speed is virtually at idle speed.

Engine start (with action by the driver)

The engine can be restarted by the driver with the aid of the automatic engine start-stop function if the driver actively intervenes by pressing the clutch pedal down fully (or pressing the START-STOP button).

Following this action by the driver, the engine will only start if the gearbox or transmission is in the neutral positon and the drive train is not engaged.

Engine start (without action by the driver)

Without active intervention by the driver it may be necessary for the engine to be started (See also "Switch-on prompts")

cardiagn.com

The engine starts without any action on the driver's part if:

- The vehicle starts to roll (forwards or reverse).
- The brake pressure falls below a defined threshold value.
- The battery charge falls below a particular threshold value.
- The condensation sensor detects condensation on the windscreen (IHKA).
- With the air conditioning compressor switched on, the evaporator temperature rises above a particular threshold value.

Note:

The aforementioned criteria apply only to the automatic engine start-stop function, in other words, not if the engine has been switched off with the SST (START-STOP button).

Switch-off inhibitors and switch-on prompts

Besides its main function of propelling the vehicle, the internal combustion engine has to provide other auxiliary functions.

These auxiliary functions are necessary for maintaining operating safety and convenience functions and complying with emissions requirements.

Certain conditions are therefore governed by switch-off inhibitors and switch-on prompts, either preventing the engine from being stopped or prompting its restarting.

Note:

The customer should be alerted to possible switch-on prompts (engine starts without customer's intervention)!

If for instance the evaporator temperature with the air conditioning is above a certain threshold value, this may serve as a switch-off inhibitor or switch-on prompt.

<u>Switch-off inhibitors</u>

The engine continues to run even though the gear lever is in the idle position and the clutch pedal has been fully released.

The following conditions act as switch-off inhibitors and prevent the engine from shutting down:

- Air conditioning requirements:
  - Automatic air conditioning: MAX AC button pressed
  - Automatic air conditioning: Defrost button pressed (request to defrost the windscreen)
  - Air conditioning system: high blower speed and low blower temperature, compressor button pressed
  - Air conditioning system: high blower speed and air distribution directed to windscreen, compressor actuated
  - Ambient temperature ≤ 3 °C and with air conditioning activated > 30 °C
- Engine coolant temperature below a particular value (depending on engine version approx. 20 - 50 °C)
- Carbon canister needs purging
- Engine speed > 900 rpm
- Battery condition:
  - State of charge too low
  - Measured battery state of charge not plausible
  - Battery temperature too high (approx. 50 °C)
  - Starting voltage drop from previous ASSF start too low
- Partial vacuum in brakes not low enough
- Steering wheel movements by the driver
- Vehicle rolling

<u>Switch-on requesters</u>

The switch-on prompt is regarded as an automatic engine start and depends on the following conditions:

- Battery condition - battery charge too low
- Air conditioning requirements - cooling
- Partial vacuum in brakes not low enough
- Vehicle starting to roll.

cardiagn.com

Special features of switch-off inhibiting and switch-on request

Battery condition and on-board power supply

The battery condition is a key factor influencing whether switch-off inhibiting and/or switch-on requests are set. The battery condition is calculated in the APM (Advanced Power Management). This function is integrated into the engine control (see energy management) and has been specifically extended for the automatic engine start-stop function.

The aim is to permit reliable starting of the combustion engine after a defined immobilisation period, in terms of the on-board power supply. Before the combustion engine is switched off, a reliable prediction of the minimum usable, absolute residual capacity and the minimum voltage level in a subsequent hot start is made. The APM calculates the condition of the electrical on-board power supply based on the battery condition.

If the battery's charge condition drops into the red zone after the engine has been switched off by the automatic engine start-stop function, the automatic engine start-stop function starts the engine.

Air conditioning requirements (heating mode / air conditioning operation)

If the coolant temperature is well below the target outlet temperature (heating-up mode), this is treated as a switch-off inhibitor. In the heating mode, the electric auxiliary water pump (N47) and electric main water pump (N43) are activated upon an ASSF engine shutdown. This is prompted by the heating and air conditioning controls via the bus system.

In the event of an ASSF engine shutdown, climatic comfort may be reduced (formation of humidity/odours) because the air conditioning compressor is not running and consequently delivers no cooling power.

If the evaporator temperature rises above a threshold value during the ASSF engine shutdown when the air conditioning is switched on, this is treated as a switch-on prompt and the engine starts automatically.

If the condensation sensor measures a value that suggests condensation, with the automatic air conditioning switched on, the automatic engine start-stop function is suppressed (switch-off inhibiting). If this occurs during an ASSF engine shutdown, a switch-on request is issued.

Insufficient braking pressure

To ensure that there is always sufficient braking effect (including when the engine is shut down), the partial vacuum in the brake servo must always be monitored. If necessary, the engine is started automatically as soon as the partial vacuum falls below 500 hPa during an ASSF engine stop.

Steering servo

The engine will not be switched off for as long as the steering wheel is being turned. Steering servo is always assured. Only when the automatic engine start-stop function ceases to identify any movement of the steering wheel via the steering column switch cluster can the engine be switched off. This information is provided via the bus system.

Safety requirements

- Protection against automatic engine starting while working in the engine compartment:

  If the bonnet is opened, the automatic engine start-stop function is deactivated to prevent an automatic engine start while working in the engine compartment.
- Renewed starting is always possible via the start/stop button.
- The automatic engine start-stop function can be reactivated after the bonnet is closed and either the engine has been started or a speed of > 5 km/h has been reached.
- Protection if the vehicle is left

  If the driver leaves the vehicle, the automatic engine start-stop function is deactivated to prevent the engine from starting automatically.

  The driver's seat belt buckle is monitored to this end.

  The automatic engine start-stop function is deactivated when the driver's seat belt buckle is released. An ASSF engine shutdown is only permitted again once it has been identified that the driver's seat belt buckle is fastened and either the engine has been restarted or a speed of > 5 km/h has been reached once (only switch-off inhibitor).

  The status of the seat belt buckle switch is indicated by the safety system via the bus system.

Important!

Even if the seat belt is not fastened and the bonnet is open, the engine can still start if the vehicle's speed exceeds 5 km/h.

cardiagn.com

Protection when vehicle moving

An engine shutdown must never take place while the vehicle is moving. An engine shutdown is only possible at a speed of less than 3 km/h.

There is also a protective feature to prevent an automatic engine start with the power transmission engaged. If the drive train is engaged on a vehicle, an automatic engine start is prevented. The zero-position sensor in the transmission monitors whether or not power transmission has been interrupted.

System-related deactivation of the automatic engine start-stop function

The Auto Start Stop function may also be deactivated for system-based reasons (the engine remains off). This is indicated to the driver by a CC message in the dashboard when a start is requested. There may be the following reasons for system-based deactivation:

- Set belt buckle signal
- Engine compartment lid contact switch
- Engine emergency running
- Implausible sensor or bus signals when vehicle tow-started.
- Ignition key is no longer detected (Comfort Access).

Note:

- Engine running and key taken out of vehicle - no ASSF engine shutdown
- Engine in ASSF engine shutdown status and key taken out of vehicle - no ASSF engine start

The engine can only be started by the driver pressing the start/stop button.

Deactivation via a safety function

If the Auto Start Stop function is deactivated by a safety function during an ASSF engine stop, the engine can only be restarted via the start/stop button and from a speed of 5 km/h.

Deactivation by system fault (emergency-run concept)

If a fault is detected in the system network of the automatic engine start-stop function (signal inputs, bus signals etc.), a switch-off inhibitor is set or the automatic engine start-stop function deactivated.

Fault recognition while the engine is running thus prevents any subsequent engine stops by the automatic engine start-stop function. In the event of a fault recognition in an engine stopped by the automatic engine start-stop function, a distinction is made between the following instances.

1. If safety-relevant faults are identified (fault in zero-position sensor, brake vacuum sensor, clutch sensor, enable line, engine compartment lid contact switch or driver's seat belt buckle), the automatic engine start-stop function is deactivated immediately and an automatic ASSF engine start is no longer permitted.
2. If other faults DME/DDE emergency operation, etc.) that are not safety-critical are identified, the next ASSF engine start is still permitted. No further ASSF engine shutdowns are permitted.
3. The automatic engine start-stop function is disabled in the event of faulty bus communication with the DME/DDE engine control.

Note:

If the automatic engine start-stop function is deactivated by a system fault, a CC message (ID397) is flashed up in the instrument panel (see display concept).

Deactivation by external factors

If the seat belt buckle or bonnet are opened during an ASSF engine stop, the automatic engine start-stop function is deactivated and an engine start is only possible with the Start/Stop button or from a speed of > 5 km/h. If the driver attempts to start the engine by pressing the clutch pedal, the CC message ID450 is flashed up after 1 to 2 seconds (see "Display concept").

Deactivation by ASSF button

Note:

The graphic shows the pushbutton (1) still showing the development code MSA (Automatic Engine Start-Stop).

cardiagn.com

For correct designation, see under "Pressing the ASSF button"

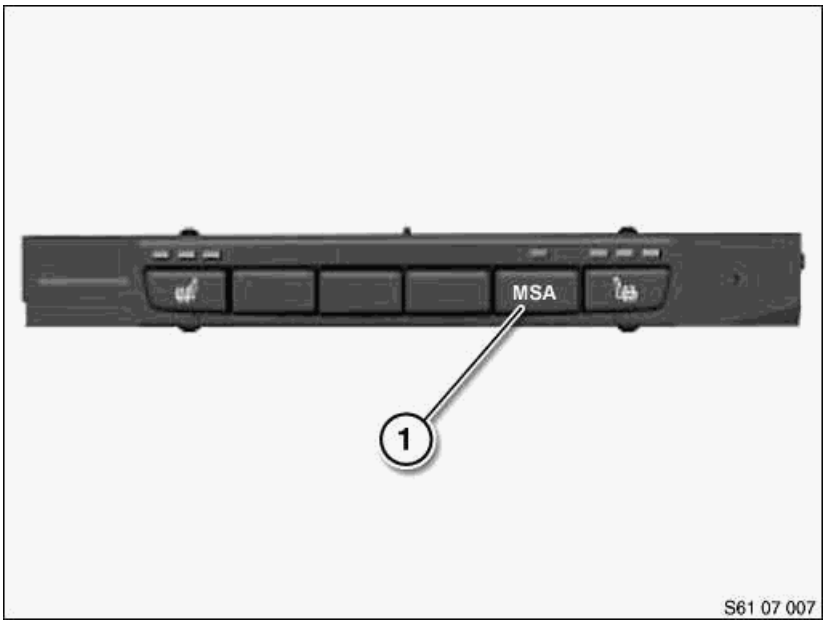

The automatic engine start-stop function can be deactivated manually with the ASSF button (1). The automatic engine start-stop function is activated with every terminal change (terminal 15 on) and with the engine stationary or if the ASSF button (1) is pressed repeatedly. The signal from the ASSF button (1) is read in by the IHKA and passed on to the engine control. The indicator light in the ASSF button (1) is actuated by the IHKA.

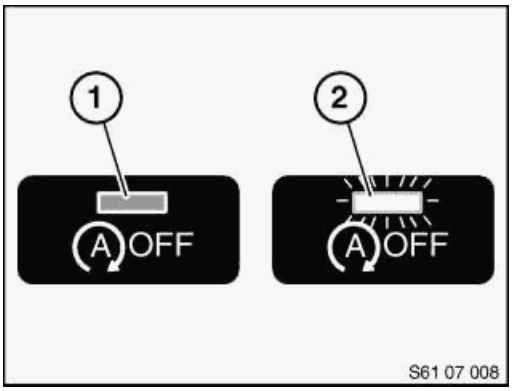

Pressing the ASSF button:

ASSF button not pressed (1) - LED off

ASSF button pressed (2) (the automatic engine start-stop function can be deactivated at the customer's request) - LED on.

The automatic engine start-stop function is active each time the engine has been restarted.

Display concept

The following displays are used in conjunction with the automatic engine start-stop function:

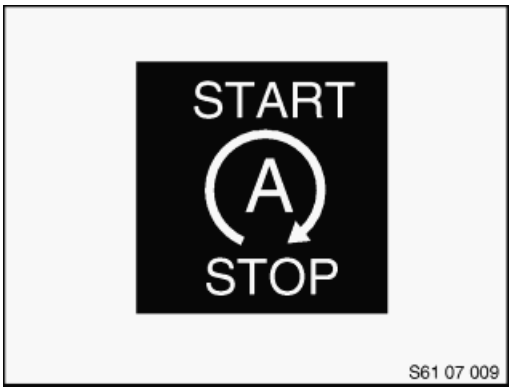

If the engine can be started via the ASSF function, this status is indicated permanently in the instrument panel.

If the customer wishes to display the temperature and time, they can change over the display by pressing the BC roller.

If there is a fault in the ASSF hardware that causes the automatic engine start-stop function to be deactivated, a CC message is displayed.

Text of CC message:"Automatic Start/Stop failure" (ID397).

cardiagn.com

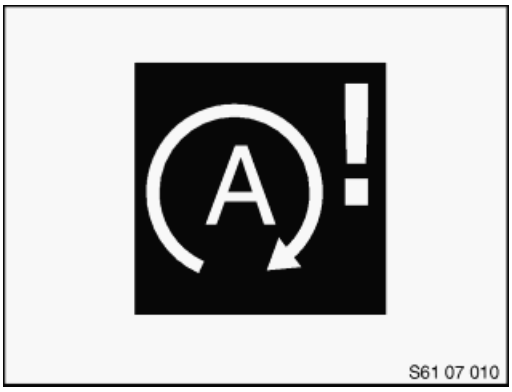

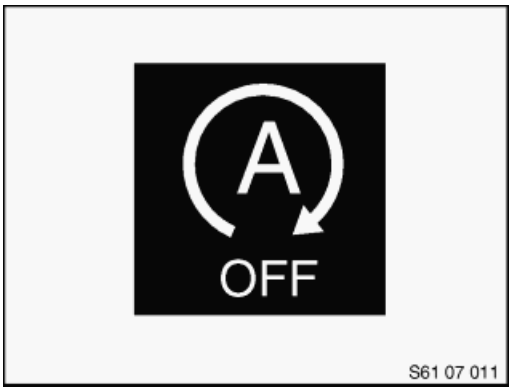

If the automatic engine start-stop function is deactivated in order to assure operational reliability (”seat belt buckle unfastened”), a further CC message is displayed as soon as there is a switch-on prompt.

Text of CC message:”Automatic Start/Stop failure” (ID450).

Notes for Service department

The automatic engine start-stop function will only operate under certain conditions.

The function includes an automatic feature that examines the safety and comfort-based conditions that govern an engine start or engine shutdown.

Note:

In the event of customer queries, always check these conditions against the Checklist in Annex 1.

Important!

If the engine compartment lid contact switch is over-extended (workshop mode), the information ”switch closed” is given. The automatic engine start-stop function is active.

An automatic engine start is possible.

Terminal 15 is automatically switched off via the signal from the door contact by opening or closing the driver's door with ASSF deactivated (e.g. ”seat belt unfastened”) and the driving lights switched off.

Terminal 15 can be permanently switched on again by subsequently pressing the START-STOP button.

Perform this process before the vehicle programming or diagnosis.

The automatic engine start-stop function is dependent on information from the energy management. In the event of the battery being changed or after every flashing process, the reference data on the charge and quality status of the battery may be lost. They will only be available again after a teach-in period of approx. 6 hours (bus system must be in sleep mode). The automatic engine start-stop function cannot be activated during this teach-in phase for reasons of reliability.

Faults stored in the ASSF system fundamentally result in the automatic engine start-stop function being deactivated. Before renewing parts, always perform a functional check to exclude the possibility of a malfunctioning sensor!

After working on vehicles with the automatic engine start-stop function involving one of the following actions, the automatic engine start-stop function is switched off until the new standby current/battery parameters have been learned.

In the following instances, the customer's attention should be drawn to the delay until the next ASSF engine shutdown:

- After disconnecting the battery
- After programming the engine control (note exceptions).

cardiagn.com

Be sure to observe the safety precautions when working on vehicles with automatic engine start-stop function! Before performing work on the engine, always make sure that the automatic engine start-stop function is switched off to prevent an automatic engine start while working in the engine compartment!

The automatic engine start-stop function is deactivated by:

- ASSF button
- Seat belt buckle
- Engine emergency running
- Open the engine hood

In most test modules in which individual component functions and/or lines are checked rather than the automatic engine start-stop function, the automatic engine start-stop function is switched off until the next terminal change for reasons of safety. This takes place automatically, i.e. a job that temporarily deactivates the automatic engine start-stop function is performed without the Service technician being able to influence events.

Important!

In the event of a fault in the seat belt buckle, engine compartment lid contact switch or ASSF button, the automatic engine start-stop function is not deactivated automatically. This could potentially result in the engine starting automatically while servicing work is being carried out in the engine compartment.

Be sure to observe the safety precautions when working on vehicles with automatic engine start-stop function!

To prevent an automatic engine start while working in the engine compartment, always make sure that the automatic engine start-stop function is switched off via ”Deactivate ASSF button/release seat belt buckle and bonnet”.

If it cannot be guaranteed that the automatic engine start-stop function is switched off, for reasons of safety it is prohibited to continue working.

cardiagn.com

61 01 07 (629)

Automatic engine start-stop function

Automatic transmission, twin-clutch gearbox

Situation: As a "BMW EfficientDynamics" measure, the automatic engine start-stop function (development code: Automatic Engine Start-Stop = MSA) helps to reduce fuel consumption and CO_2 emissions. The combustion engine is switched off and on automatically under certain conditions.

Vehicles concerned: The automatic engine start-stop function in will be phased in as from 04/2010 in connection with the twin-clutch gearbox in the M3 (E9x) and automatic transmission in the F04.

Note:

The automatic engine start-stop function is also installed as standard on these vehicles.

Procedure: *Note:*

The following description only deals with variations and special features compared to the automatic engine start-stop function already known for the manual gearbox. Further detailed information on the automatic engine start-stop function can be found in the following documents:

- Safety information for working on vehicles with automatic engine start-stop system (MSA)
- Service Information "Automatic engine start-stop function (manual gearbox)", SI number 610107335
- Functional description Automatic engine start-stop function (MSA), 2nd generation

Functional sequence ASSF (automatic engine start-stop function)

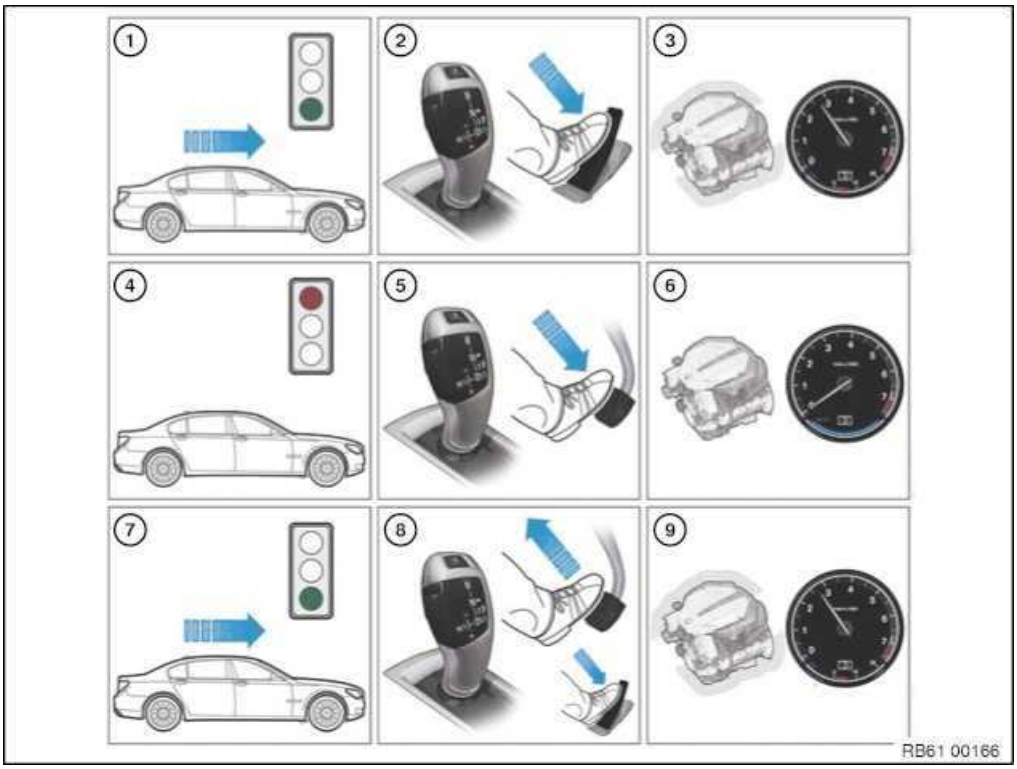

Index	Explanation	Index	Explanation	Index	Explanation
1	Vehicle moving.	2	Gear selector switch in position "D". Driver presses accelerator pedal.	3	Combustion engine running.
4	Vehicle is decelerated down to standstill.	5	Gear selector switch remains in position "D". Driver presses the brake pedal to decelerate and bring the vehicle to a standstill.	6	Combustion engine is switched off after 1 second. Rev counter shows "0".

cardiagn.com

7	**The driver wishes to resume the journey.**	**8**	**Gear selector switch remains in position "D".** **Driver takes foot off brake pedal and then presses the accelerator pedal.**	**9**	**Combustion engine starts up.**

Prerequisites of an automatic engine shutdown

The automatic engine start-stop function will only stop or start the engine if certain prerequisites are met.

Engine shutdown

The engine is switched off when:

- The vehicle is stationary (speed < 0 kmh).
- The engine speed is virtually at idle speed.
- The vehicle has been driven at > 10 km/h since the engine was last shut down.
- The vehicle has been driven at 10 km/h since the last change at terminal 15.
- The brake is pressed.
- Steering wheel movement is not moved. Steering wheel must be aligned straight.

Engine start

The engine is started automatically when:

- Brake pedal is released or the accelerator pedal is pressed.

Note:

The aforementioned criteria apply only to the automatic engine start-stop function, in other words, not if the engine has been switched off with the SST (START-STOP button).

Switch-off inhibitors and switch-on prompts

Besides its main function of propelling the vehicle, the internal combustion engine has to provide other auxiliary functions.

These auxiliary functions are necessary for maintaining operating safety and convenience functions and complying with emissions requirements.

Certain prerequisites are therefore governed by switch-off inhibitors and switch-on prompts, either preventing the engine from being shut down or prompting an engine restart.

Note:

The customer should be alerted to possible switch-on prompts (engine starts without customer's intervention)!

<u>Switch-off inhibitors</u>

The engine continues running although the vehicle is at standstill and held with the brake pedal.

The following preconditions act as switch-off inhibitors and prevent the engine from shutting down:

- Engine adaptation (e.g. cylinder adjustment)
- Regeneration of the diesel particulate filter
- Carbon canister needs purging
- Insufficient knock resistance of fuel
- Engine fault
- Engine coolant temperature
  - below a defined value (depending on engine version approx. 20 - 60 °C)
  - above a defined value (depending on engine version approx. 100 - 130 °C)
- Automatic transmission not ready
  - Gearbox adaptation active
  - Drive position “S”, “M”, “N”, “R”
- Driving surface incline too great
- Assist system active (Active Cruise Control, Parking Assist, Hill Descent Control)
- Stop-and-go driving
- Last MSA stop was too long

cardiagn.com

- Air conditioning requirements:
  - Automatic air conditioning: MAX AC button pressed
  - Automatic air conditioning: Defrost button pressed (request to defrost the windscreen)
  - Air conditioning system: high blower speed and low blower temperature, compressor button pressed
  - Air conditioning system: high blower speed and air distribution directed to windscreen, compressor actuated
  - Ambient temperature ≤ 3 °C
- Engine speed > 1200 rpm
- Battery condition:
  - State of charge too low
  - Measured battery state of charge not plausible
  - Battery temperature too high (approx. 50 °C)
  - Starting voltage drop from previous ASSF start too low
- Vehicle rolling

Hybrid cars:

- High voltage power management: Temperature too low or too high
- Load on vehicle electrical system too high
- High-voltage battery unit: State of charge too low or too high
- Hybrid system fault

Switch-on requesters

The following preconditions result in an engine start:

- Vehicle starting to roll
- Steering wheel turned
- Switching the drive position (to “S”, “M”, “N”, “R” with automatic transmission; "S", "D", "N", "R" with DKG; "N", "R" with DKG M3 US version)
- Power management: State of battery charge too low, battery temperature too high, power requirement of active electrical loads too high
- Air conditioning requirements - cooling
- Partial vacuum in brakes not low enough

Hybrid cars:

- High voltage power management: Temperature too low or too high
- Load on vehicle electrical system too high
- High-voltage battery unit: State of charge too low or too high
- Hybrid system fault

Safety requirements

Following preconditions **deactivate** the automatic engine start-stop function:

- Engine compartment lid is raised.
- Driver leaves vehicle: Secured by door contact, seat belt buckle and brake pedal
- Vehicle towed away
- Ignition key is no longer detected
- MSA button
- Battery not learned (battery data may be lost after changing the battery, disconnecting the battery or programming the engine control)

Note:

Renewed starting is always possible via the start/stop button.

Important!

Even if the seat belt is not fastened and the bonnet is open, the engine can still start if the vehicle's speed exceeds 5 km/h.

ASSF button

cardiagn.com

Note:

No Start/Stop button is fitted in the F04. On this vehicle, the automatic engine start-stop function is an integral part of the high voltage system.

New generation ASSF button:

The ASSF button (2) is arranged below the Start/Stop button.

The automatic engine start-stop function can be deactivated manually with the ASSF button (2). The automatic engine start-stop function is activated with every terminal change (terminal 15 on) and with the engine stationary or if the ASSF button (2) is pressed repeatedly.

ASSF button on the M3 (E9x):

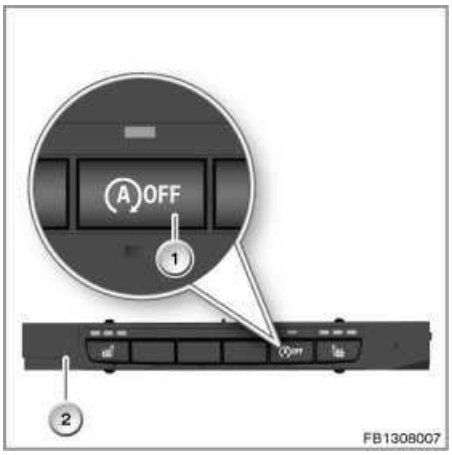

On the M3, the ASSF button (1) is integrated in the centre console control panel (2).

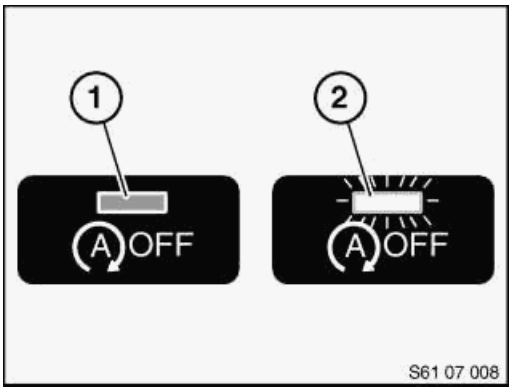

Pressing the ASSF button:

ASSF button not pressed (1) - LED off

ASSF button pressed (2) The Auto Start Stop function is deactivated at the customer's request - LED on.

The Auto Start Stop function is active each time the engine has been restarted.

Notes for Service department

The Auto Start Stop function will only operate in certain conditions.

The function includes an automatic feature that examines the safety and comfort-based conditions that govern an engine start or engine stop.

Note:

In the event of customer queries, always check these prerequisites against the Checklist in

cardiagn.com

Annex 1.

cardiagn.com

61 01 08 (492)

Battery charge state

All models

Situation:

Due to the battery self-discharging and the vehicle's off-load current (if the battery has not been disconnected from the vehicle circuit), the vehicle's battery will slowly but continuously discharge.

If a long time passes without the battery being recharged, it will eventually result in concealed damage. This will lead to early battery failure.

To prevent damage to the battery, measures are being taken throughout the entire distribution chain (transport mode, battery charging calendar, etc.) to ensure that the battery always has a sufficient charge state.

With the new power management system from vehicle F01, the following battery charge state displays will be generated in the instrument cluster (Check-Control message) when transport mode is set:

Vehicle battery OK.

Continue to recharge the battery on store and compound vehicles regularly in accordance with the battery charging calendar.

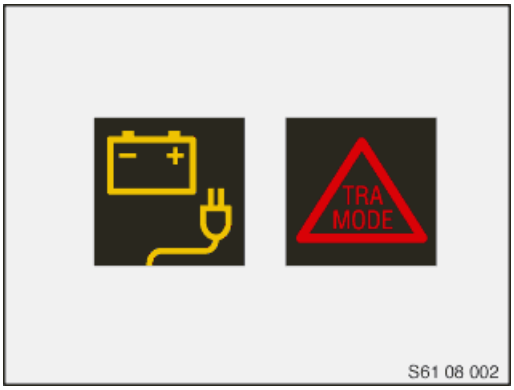

Battery charge state insufficient.

Recharge the battery without delay.

Important!

If a new vehicle is delivered through distribution chain with this display, this must be recorded in the truck delivery note and/or haulier handover report.

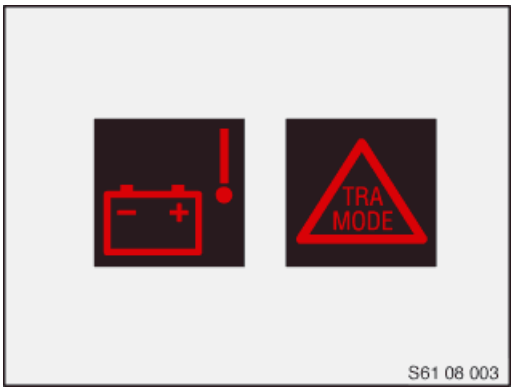

Vehicle battery damaged.

During the pre-delivery check before the vehicle is handed over to the customer renew the battery in accordance with instructions given by the BMW diagnosis system and register the battery replacement with the corresponding service function.

Important!

If a new vehicle is delivered through distribution chain with this display, this must be recorded in the truck delivery note and/or haulier handover report.

Important!

Determine the cause of the fault with the BMW diagnosis system and perform test module energy diagnosis promptly:

- If a fault is detected in the vehicle electrical system (preventing sleep mode, unauthorised reactivation, off-load current violation, alternator fault): reimbursement via warranty.

cardiagn.com

- If a handling error is determined (side lights / parking lights left on, terminal 15 on): reimbursement in the same way as for transport damage.

Reimbursement via warranty is fundamentally not possible if a handling error is determined. For this reason, vehicles must be checked on handover through the distribution chain.

cardiagn.com

61 07 02 (875)

Battery master document

All model series

Situation: The electrical system of BMW vehicles has been subject to an ongoing development process over the last few years. This has led to increased demands being placed on the battery. This document summarises all important information about how the battery should be handled in the dealership.

Procedure: The complaint "flat battery" can have various causes, most of which do not concern the battery itself. For that reason, replacing the battery will only very rarely provide a permanent solution to the problem. The cause must be properly analysed in order to perform a repair that actually rectifies the cause.

Below you will find list of the available auxiliary materials. These must be worked through step-by-step to investigate the problem. The documents listed can be accessed via hotspots.

1. Fault (cause) analysis (energy diagnosis)

Fundamentally, the following causes are possible for a breakdown resulting from a flat battery or problems in the vehicle's electrical power supply:

Vehicle faults

- Battery defective / alternator fault
- Vehicle does not "go to sleep"
- Vehicle keeps being woken up
- Excessive standby current

Operating error

- Side lights/parking lights/hazard warning flashers left on too long
- Terminal R/15 left on too long

Unreasonable driving/usage profile

An unreasonable driving profile (e.g. extremely short distances) or an unreasonable usage profile (.e.g. too long immobilisation period, use of auxiliary consumers) represents a very frequent cause of running down the battery without there being a fault with the vehicle or battery.

If in these cases the battery is not charged sufficiently during driving, a charger must be connected during the immobilisation period (recommended chargers with cable permanently connected to battery, see BMW Group Parts).

Attention!

Do not connect the chargers to the 12 V charging socket on the vehicle side. The vehicle electrical system is thus prevented from "going to sleep" and the battery from being discharged.

The installation of a larger battery or an AGM battery can be used to rectify this (if an AGM battery has not yet been installed).

Customers who have no option to connect a charger to their vehicle during the immobilisation period are recommended, as the only alternative in reaching a state of charge that is too low, to travel distances of at least 10 km.

For the following vehicles the energy diagnosis test procedure must be worked through in the event of the complaint "flat battery":

- E65, E66, E67 from model year 03/2004,
- E60, E61, E63, E64, E70, E71, E72, E81, E82, E84, E87, E88, E89, E90, E91, E92, E93,
- All F Series from F01,
- BMW i
- All MINIs from R55,
- RR04,

Note:

The aim of energy diagnosis is to identify the most probable cause for a breakdown caused by a

cardiagn.com

flat battery or for problems in the vehicle's electrical power supply. The causes listed above are stored in energy diagnosis.

To enable the applicant to use the correct defect code, make sure that both the customer's statement and the diagnosis results are adequately documented. These must be made available to the applicant.

Text search in ISTA or path: Function Structure > 03 Body > Voltage supply > Energy diagnosis

For all other model series:

For series without energy diagnosis, the customer shall be interviewed to make sure the operator errors described above can be ruled out as the cause of the battery discharging.

An on-board diagnosis is available to evaluate the battery condition of vehicles with intelligent battery sensor (IBS) or battery electronics (lithium ion battery):

- All BMW and MINI F series from series introduction
- Exception: F01, F02, F03 up to 09/2010, F04
- BMW i
- RR04

The following criteria are analysed to evaluate state of charge:

- Capacity loss
- Charge balance
- Complete discharges
- Operational energy capacity through automatic engine start-stop function (MSA)
- Water loss

The battery condition is determined for the following vehicles with intelligent battery sensor (IBS)by evaluation of the operational energy capacity and the voltage dip at engine start:

- all BMW E-series
- F01, F02, F03 up to 09/2010, F04
- all MINI R-series

For vehicles with automatic engine start-stop system, if this function is not fully available:

Important!

The prerequisite for invoicing a battery through the warranty channel is to work through the test module.

Energy diagnosis through to the diagnosis result:

- Displaying of cause
- Displaying of help instructions
- Displaying of corresponding diagnosis code

Exceptions are:

- Obvious battery damage and leakage

  Use the correct defect code in such situations (61 21 00 49 or 61 21 00 01).
- Use of BMW Group Mobile Service and battery replacement on site to restore customer mobility as quickly as possible.

2. Measure closed-circuit current

Standby current check of the 12 V battery

BMW diagnosis system (functional description):

cardiagn.com

- E38, E39, E46, E53, E83, E85,

Path: Complete vehicle > Electric motor > Voltage and current control > Voltage and current supply > Standby current measurement

- E65, E66, E67,

Path: Complete vehicle > Body > Voltage supply > Voltage and current supply > Standby current measurement > Off-load current diagnosis

- E60, E61, E63, E64, E70, E71, E72, E81, E82, E84, E87, E88, E89, E90, E91, E92, E93,
- All F Series from F01,
- BMW i
- All MINIs from R55,
- RR04,

Path: Service functions > Body > Voltage supply > Standby current

3. Check alternator

Diagnosis system (functional description):

- All except E65, E66, E67,

Path: Complete vehicle > Electric motor > Voltage and current control > Voltage and current generation

- E65, E66, E67,

Path: Complete vehicle > Body > Voltage supply > Alternator

4. Battery replacement

In the following vehicles the new battery needs to be registered via the diagnosis system:

Always:

- E65, E66, E67,
- F80, F82, F83,

Providing an intelligent battery sensor (IBS) is fitted (depends on vehicle equipment):

- E60, E61, E63, E64, E70, E71, E72, E81, E82, E84, E87, E88, E89, E90, E91, E92, E93,
- All F Series from F01,
- BMW i
- All MINIs from R55,
- RR04,

Important!

If the new battery is not registered, incorrect readings may appear in the display of the on-board computer due to previous data in the power management system (check control message "Recharge battery" appears even though the battery is new).

Only AGM batteries should be installed in the following vehicles:

- E65, E66, E67,
- F01, F02, F03, F04, F06, F07, F10, F11, F12, F13, F18,
- BMW i

cardiagn.com

- Vehicles with auxiliary heater (SA536), intelligent generator control or automatic engine start-stop function.

Only lithium ion batteries should be installed in the following vehicles:

- F80, F82, F83

5. Battery charging

5.1 Charging the lead-acid-battery or the AGM battery

- The battery may only be recharged by means of chargers that have been approved by BMW and that have a constant charging voltage of **14.8 V**.
- If possible, the battery temperature should be between 15 °C and 25 °C during charging. Under these preconditions, the battery is adequately charged when the charge current drops below 2.5 amps.
- If the battery is recharged at lower temperatures, the process should not be ended until the charge current drops below 1.5 amps.
- On vehicles with IBS, recharging the battery directly at the battery terminals could lead to a misinterpretation of the battery condition and even unwanted Check Control messages or fault entries.
- If the battery is recharged while it is installed, it must be recharged using the jump start terminal points, whenever jump start terminal points are provided in the engine compartment. Only then can you be sure that recharging is correctly recognised by the vehicle electronics on vehicles with intelligent battery sensor (IBS).

  Exception: MINI from R55: These vehicles do not have any jump start terminal points in the engine compartment.

  On these vehicles, the positive terminal of the battery charger must be directly connected to the battery. On vehicles with a petrol engine, the negative terminal can be connected to the lifting eye (suspension lug) on the transmission and on vehicles with diesel engines to a flange on the engine bearing block on the engine.

5.2 Charging the lithium ion battery

Important!

The charging voltage that is generated by existing chargers that are designed for the lead-acid or AGM battery is too high for the lithium ion battery.

This excessive charging voltage may **in some cases** result in that **the separating switch** of the lithium ion battery **will be opened**. **This does not damage the lithium ion battery.** The separator switch will close again when a charging voltage of < 14 V is applied at the battery terminals.

Before charging a lithium ion battery, adjust the charging voltage of existing charger adapters once.

- The battery may only be recharged by means of chargers that have been approved by BMW and that have a constant charging voltage of **14.0 V**.
- If possible, the battery temperature should be between 15 °C and 25 °C during charging. Under these preconditions, the battery is adequately charged when the charge current drops below 2.5 amps.
- Do not charge lithium ion battery when temperature is below 5 °C!
- The lithium ion battery can be charged via **the jump start terminal points** in the engine compartment **as well as directly on the battery terminals**.

6. Charging the high-voltage battery

Charge high-voltage battery	E72, F04
Notes on charging the high-voltage battery on standing vehicles (new and used cars)	E72, F04
Notes on charging the high-voltage battery on standing vehicles (new and used cars)	F01H, F02H, F10H, F30H

cardiagn.com

7.	**Notes on handling the high-voltage battery in the workshop**	F01H, F02H, F10H, F30H

Eighth Additional publications of the subject of "Batteries"

AGM battery - brief component description	
Notes on AGM battery	
Information on intelligent battery sensor (IBS)	
Notes on lithium ion battery	
Notes on battery electronics (lithium ion battery)	
Battery recharging intervals for stationary vehicles, battery charging calendar and battery tag	12-V battery, high-voltage battery unit
Battery log form (not for USA)	
{Battery Log Form} (for USA only)	
Notes on charging batteriesE65	
Electronic battery master switch - all model series	
Battery positive terminal with battery in luggage compartment, E36	
System battery discharges, E38/3	
Replace system battery, E38 M73	
Checking electrical connection for secondary air pump, Z3	

cardiagn.com

61 03 98 (387)

Battery recharging intervals for booth vehicles, battery charging calendars and battery tags (12-V battery, high-voltage battery unit)

All models

Situation: Due to the self-discharging of the vehicle battery (12 V battery, high-voltage battery unit) and vehicle standby current (if the vehicle battery was not disconnected from the vehicle electrical system), the vehicle battery is discharged slowly, but continuously.

If the vehicle battery is not recharged for an extended period of time, it will be damaged. This will result in a premature battery failure.

Measure: To maintain the quality of the vehicle battery in standing vehicles, it is necessary to recharge this vehicle battery regularly.

Procedure: Recharging intervals:

12V battery

All vehicles:

- 12-V battery connected to the vehicle electrical system: **6 weeks**

All vehicles without BMW i and Plug-in Hybrid (PHEV):

- Continuous disconnection of the 12-V battery from the vehicle electrical system by removal of the ground cable to the 12 V battery or by switching off of the fitted battery master switch, if installed: **12 weeks**

High-voltage battery units:

- All vehicles: **6 weeks**
- Plug-in-hybrid (PHEV): as required

The recharging intervals follow the battery charging calendar.

Recharge when the colour of the calendar week on the battery calendar matches the colour of the battery tag. Battery tags are located on all new vehicles' interior mirror.

N.B.:

1. **Since different systems are used by distribution channels for documentation, it is not always clear whether the vehicle battery was actually recharged during the week that is indicated. Therefore all recharge procedures must also be documented on the battery tag on the interior mirror (write date of recharge with a smudge-proof pen and confirm that the work has been carried out with your signature next to the date). The battery tag remains in the vehicle until the vehicle is handed over to the customer and is then filed with the vehicle records.**
2. **Dealers who store the vehicles externally (e.g. at freight forwarding businesses) are responsible for making sure that the vehicle batteries for these vehicles are recharged according to the battery charging calendar.**
3. **For vehicles in show rooms, the battery tags must be placed in the glove box. In the case of an increased draw on the charge (e.g. when doors are opened, the radio is turned on, electrical seat adjustment is operated), much shorter recharging intervals are required on these vehicles (e.g. every night) so that a total battery discharge is reliably avoided. It is however better to provide for charge compensation by means of a permanent support charge in the showroom.**

   "Trickle charger" SI 02 03 05 (205)

Parts:

Battery log form (not just for USA)

{Battery Log Form} (for USA only)

cardiagn.com

Designation	Part number	Quantity
Battery tag, coloured		
whisky	01 89 9 781 424	as needed
sun yellow	01 89 9 781 425	as needed
emerald	01 89 9 781 426	as needed
california blue	01 89 9 781 427	as needed
brick red	01 89 9 781 428	as needed
Grey	01 89 9 781 429	as needed

cardiagn.com

64 02 00 (553)

IHKA control panel: LED in A/C button flashes

All models with integrated automatic heating and air conditioning (optionÂ 534)

Complaints: After a new IHKA control panel has been installed, the LED in the A/C button flashes.

Cause: The flashing of the LED in the A/C button indicates that the automatic air-conditioning system is in the compressor protection mode. This protective function is intended to ensure an adequate refrigerant distribution the first time the air conditioner is operated (in the vehicle factory), before the engine is revved up.

The spare part is identical to the IHKA control panel used in series production. For this reason, the said protection mode is always active the first time a new IHKA control panel is installed. The LED in the A/C button will then flash continually until the A/C compressor has been engaged for about 90 seconds at an engine speed of less than 1500 rpm.

Affected vehicles: All models with integrated automatic heating and air conditioning (option 534)

Procedure: After a new IHKA control panel has been installed, the air conditioner must be run continually with the engine at idling speed until the LED in the A/C button stops flashing.

Under certain marginal conditions (e.g. very low ambient temperatures), it is possible that the A/C compressor is not permanently active. In such cases, the LED in the A/C button can continue flashing for several minutes.

cardiagn.com

64 08 00 (645)

Musty odour from heating and air conditioning system, evaporator cleaning

All model series

Complaint: When operating the heating and air conditioning system, a musty odour briefly occurs in the vehicle. This occurs mostly immediately after starting the engine with the air conditioning switched on or after switching off the air conditioning while driving.

Cause: The cause for the customer complaint is not a fault in the air conditioning of the vehicle. The formation of odour is due to environmental factor during the operating period of the heating and air conditioning system.

The constant condensation of air humidity at the evaporator over a long operating period of the heating and air conditioning system creates a favourable environment for bacteria and other micro-organisms.

Together with dirt contamination brought in by the fresh air, this may cause microbiological growth on the evaporator and consequently a musty odour.

Regularly changing the microfilter may reduce the entry of dirt contamination and therefore delay or prevent the development of aforementioned customer complaint.

Replacement of the evaporator has no continuous effect as microbiological organisms may redevelop.

Invoicing as warranty is not justifiable as there is no technical fault.

Vehicles concerned: All series with air conditioning (IHKR) or automatic air conditioning (IHKA).

Procedure:

1. Evaporator cleaning with spray lance

The most efficient and lasting method of eliminating the musty odour from the air conditioning is to clean the evaporator with the aid of a spray lance. With this procedure, the disinfectant is sprayed with high pressure directly on the evaporator.

Description of the operations:

For the detailed description of the procedure for the following series, please see the respective repair instructions:

- E39/E53 with air conditioning (IHKR): Cleaning evaporator
- E39/E53 with automatic air conditioning (IHKA): clean evaporator (automatic air conditioning)
- E46 with air conditioning (IHKR): Cleaning evaporator
- E46 with automatic air conditioning (IHKA): clean evaporator (automatic air conditioning)
- E65/E66: Cleaning evaporator
- E60/E61/E63/E64: Cleaning evaporator
- E85/E86: Cleaning evaporator
- E81/E82/E87/E88/E90/E91/E92/E93: Cleaning evaporator
- E70/E71/E72: Cleaning evaporator
- F01/F02/F03/F04/F06/F07/F10/F11/F12/F13/F18: Cleaning evaporator
- F20/F21/F22/F23/F30/F31/F32/F33/F34/F35/F36/F80/F82/F83/F87: Cleaning evaporator
- I01t: Cleaning evaporator
- F45/F46/F48/F49: Cleaning evaporator
- F54/F55/F56/F57/F60: Cleaning evaporator
- G05/G06/G07/G11/G12/G14/G15/G16/G30/G31/G32/G38/F90/F91/F92/F93/F95/F96: Cleaning evaporator
- G01/G02/G08/G29: Cleaning evaporator

2. Cleaning with the evaporator cleaning device "Aircomatic"

As an alternative, the evaporator can be cleaned using the "Aircomatic" cleaning system made by WYNN'S. For this purpose, use the "Airco-Clean" cleaning agent made by the same company.

WYNN'S describes this procedure as "Ultrasound procedure".

cardiagn.com

The cleaning power using the "ultrasound procedure" is lower as compared to cleaning with a spray lance.

If the "ultrasound procedure" does not bring long-term success due to very severe dirt contamination of the evaporator, clean the evaporator using a spray lance and the heating and air conditioning system cleaning agent.

Note:

This procedure is to be used for vehicles for which no spray lance is offered.

Description of the operations:

- Remove microfilter (replace with new filter after cleaning)
- Start the vehicle
- Switch on air conditioning
- Set temperature control to lowest value
- For automatic air conditioning (IHKA): Switch off automatic air distribution/supply
- Select the lowest fan speed
- Set ventilation to upper body area
- Adjust air supply to air recirculation function
- Shake the "Airco-Clean" bottle well
- Place the ultrasound device upside down
- Screw in the "Airco-Clean" bottle with its opening facing upwards into the device
- Return ultrasound device to initial position allowing the contents of the bottle to partially flow into the device
- Place the ultrasound device in the footwell on the passenger's side
- Connect the atomisation hose to the device
- Place the atomisation hose so that the recirculated air system can take in the emitted vapour well

  Do not kink the hose!
- Connect the ultrasound device using the included cable

  Atomisation starts!
- Close vehicle doors and side windows

  Attention:

  No one must remain in the vehicle during treatment!

- Treatment is complete after approx. 20 minutes and the ultrasound device stops
- After treatment, open doors and air the vehicle for approx. 5 minutes
- After treatment pour out the residual liquid in the ultrasound device
- Briefly rinse the ultrasound device with water

Parts required: 1. Cleaning with spray lance

Spray lance	Order/part number	Quantity
-E39/E46/E53/E83	64 1 450	1
- E65/E66/E67 (left-hand drive vehicle)	64 1 280	1
- E65/E66/E67 (right-hand drive vehicle)	64 1 290	1
-E60/E61/E63/E64	64 1 480	1
- E85/E86 (left-hand drive vehicle)	64 1 490	1
- E85/E86 (right-hand drive vehicle)	64 1 250	1
- E81/E82/E87/E88/E90/E91/E92/E93 (left-hand drive vehicle)	64 1 260	1

cardiagn.com

- E81/E82/E87/E88/E90/E91/E92/E93 (right-hand drive vehicle)	64 1 270	1
- E70/E71/E72 (left- and right-hand drive vehicle)	64 1 300	1
- F01/F02/F03/F04/F06/F07/F10/F11/F12/F13/F18 (left-hand drive vehicle) G01/G02/G08/G29 (left-hand drive vehicle)	83 30 2 222 502	1
- F01/F02/F03/F04/F06/F07/F10/F11/F12/F13/F18 (right-hand drive vehicle) G01/G02/G08/G29 (right-hand drive vehicle)	83 30 2 364 733	1
-F20/F21/F22/F23/F30/F31/F32/F33/F34/F35/F36/F80/F82/F83/F87 (left hand drive vehicle)	83 30 2 344 001	1
-F20/F21/F22/F23/F30/F31/F32/F33/F34/F35/F36/F80/F82/F83/F87 (right-hand drive vehicle)	83 30 2 289 613	1
-I01	83 30 2 413 653	1
-F45/F46/F48/F49	83 30 2 413 653	1
-F54/F55/F56/F57/F60	83 30 2 413 653	1
-G05/G06/G07/G11/G12/G30/G31/G32/G38/F90 (left-hand drive vehicle)	83 30 2 411 757	1
-G05/G06/G07/G11/G12/G30/G31/G32/G38/F90 (right-hand drive vehicle)	83 30 2 414 999	1
Spray gun		
SATA spray pistol	81 45 9 429 217	1
Heating and air conditioning system cleaning agent		
Heating and air conditioning system cleaning agent (only for cleaning with spray lance!)	83 19 2 180 507	1

Heating and air conditioning system cleaning agent is used undiluted. No rinsing required.

The spray lance spray gun can be obtained from the special tools online catalogue; the heating and air conditioning system cleaning agent can be obtained directly from BMW Group Parts.

2. Cleaning with the evaporator cleaning device "Aircomatic"

(Valid for all series)

Description	Part number	Quantity
Heating and air conditioning system cleaning agent	83 19 2 409 611	1

Heating and air conditioning system cleaning agent is used undiluted.

The "Aircomatic" cleaning device and the "Airco-Clean" cleaning agent can be obtained directly from BMW Group Parts.

cardiagn.com