BRAKE SYSTEM

SECTION BR

CONTENTS

PRECAUTIONS AND PREPARATION

SRS Airbag • Pretensioner Seatbelt 3
Brake System 3
Brake Control 4
Preparation 4

BRAKE PEDAL

On-Vehicle Inspection and Adjustment 5
Removal • Installation 6

BRAKE FLUID

Brake Fluid Change 8
Air Bleeding 8
Fluid Level Inspection 9

BRAKE PIPING • BRAKE HOSE

Brake Hydraulic Line 10
Removal • Installation of Front Brake Piping • Brake Hose 10
Removal • Installation of Rear Brake Piping • Brake Hose 11

BRAKE MASTER CYLINDER

Removal • Installation 13
Disassembly • Assembly 14

VACUUM TYPE BRAKE BOOSTER

On-Vehicle Inspection and Service 18
Removal • Installation 18
Inspection After Removal 19

VACUUM PIPING

Removal • Installation 20
Inspection 20
Check Valve Inspection 20

FRONT DISC BRAKE

Components Diagram 22
On-Vehicle Inspection and Service 22
Removal • Installation of Brake Pad 23
Removal • Installation of Caliper Assembly 23
Disassembly • Assembly of Caliper Assembly 24
Caliper Inspection 25
Run-Out Inspection 25

REAR DRUM BRAKE

Components Diagram 29
Removal • Installation of Drum Brake Assembly 30
Inspection After Removal 31
Removal • Installation of Wheel Cylinder 34
Disassembly • Assembly of Wheel Cylinder 34
Wheel Cylinder Inspection 34

PARKING BRAKE

Components Diagram 35
Removal • Installation 35
Inspection 36
Adjustment 36

ABS SYSTEM

General 37
Fail-Safe 37
Hydraulic Circuit Diagram 37
System Components 38
Circuit Diagram 39
Wiring Diagram 40

CONTENTS

TROUBLE DIAGNOSIS

How To Diagnose 43
Diagnosis Flow 44
Components Location 46
Control Unit Input/Output Signal Standards (With CONSULT-II) 47
Self-Diagnosis 49
Data Monitor 51
Active Test 52
Preliminary Check 53
Wheel Speed Sensor System 54
Control Unit Power System 55
ABS Works Frequently 56
The Brake Pedal Is Abnormal 57
Stopping Distance Is Too Long 57
ABS Does Not Work 58
Pedal Vibration and Noise 58

WHEEL SPEED SENSOR

Removal • Installation 59

SENSOR ROTOR

Removal • Installation 61

ABS SYSTEM

Removal • Installation 62

SERVICE DATA

Brake Operation Conditions 63
Braking Force 63
Brake Pedal 63
Check Valve 63
Brake Booster 63
Front Disc Brake 63
Rear Drum Brake 63
Parking Brake 64
Tightening Torque 64

SRS Airbag • Pretensioner Seatbelt

The driver's and passenger's SRS (Supplemental Restraint System) airbag that is used with the pretensioner seatbelt system reduces the facial impact of the driver and the passenger during a front collision.

Also, the driver and passenger's SRS side airbag reduces the facial and chest impact during a side impact with the aid of the seatbelt, highly tension body and energy-absorbing door.

The SRS airbag and pretensioner seatbelt system consist of driver's airbag module (center of the steering wheel), passenger's airbag module (in the passenger side instrument panel), front side airbag module (outer side of front seat), pretensioner seatbelt, airbag sensor unit, spiral cable, side sensor and warning light.

Refer to [RS Restraint System] in this Service Manual for safe airbag system service information.

WARNING:

- **To install/remove the SRS airbag, pretensioner seatbelt system related components and harness, turn the ignition switch "OFF", disconnect the battery terminals and wait over 3 minutes. (This is to discharge all the remaining electricity in the airbag sensor unit's auxiliary power circuit.)**
- **Do not use air impact or electrical tools when installing/removing the components.**
- **Do not use any hand-held tools for harness used in SRS airbag and pretensioner seatbelt systems. Be careful with the harness not to tangle with or interfere with other components.**
- **Do not use any electrical test equipments such as circuit tester when inspecting the SRS airbag and pretensioner seatbelt circuit while installed unless the Service Manual instructs to do so. (The weak current in the tester can cause the SRS airbag to operate.)**
- **Do not insert any foreign materials such as a screwdriver in the airbag module and pretensioner seatbelt connector in order to prevent unintended operation due to static electricity.**
- **The harnesses used in SRS airbag and pretensioner are covered with yellow insulation for easy identification.**
- **Refer to "RS Restraint System" in this Service Manual for safe airbag system service information.**

Brake System

- Remove all brake dust covered on the brake pad, shoes, drum and back plate using a dust collector. Do not scatter the dust using an air blower.
- Use a brake fluid "DOT3" or "DOT4" as a brake fluid.
- Do not reuse the drained brake fluid.
- Be careful not to stain the brake fluid on the painted surface. If stained, wipe out with water immediately.
- Use clean brake fluid when cleaning the brake components such as the master cylinder and disc brake calipers.
- Do not use any mineral oil such as gasoline or kerosene for cleaning. It damages the rubber components.
- Securely tighten the brake tube flare nut with a flare nut torque wrench.
- If oil leakage is found in the main security components, check by disassembling and replace if defective.
- Turn the key switch OFF and disconnect the ABS actuator control unit connector or battery terminal before performing any service operations.
- Always check the torque during brake tube installation.

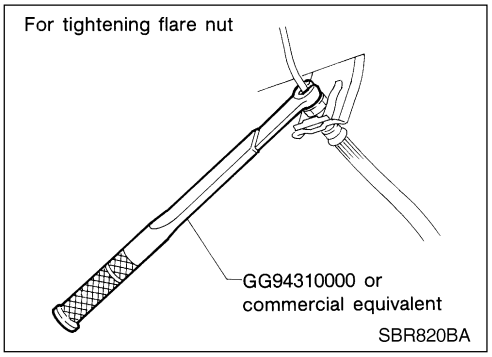

Brake Control

- During ABS operation, brake pedal lightly vibrates and a mechanical noise may be heard. This is normal.
- Just after starting vehicle after ignition switch ON, brake pedal may vibrate or motor operating noise may be heard from engine compartment. This is a normal status of operation check.
- Stopping distance may be longer than that of vehicles without ABS when vehicle drives on rough, gravel, or snow-covered (fresh, deep snow) roads.
- When a malfunction is indicated by ABS or another warning lamp, collect all necessary information from customer (what symptoms are present under what conditions) and check for simple causes before starting diagnostic servicing. Bdsides electrical system inspection, check booster operation, brake fluid level, and oil leaks.
- If tire size and type are used in an improper combination, or brake pads are not Genuine NISSAN parts, stopping distance or steering stability may deteriorate.
- If there is a radio, antenna, or antenna lead-in wire (including wiring) near control module, ABS function may have a malfunction.
- If aftermarket parts (car stereo, CD player, etc.) have been installed, check for incidents such as harness pinches, open circuits, and improper wiring.

Preparation

Item	Description
GG94310000 Flare nut torque wrench a: 10 mm (0.39 in)	Removing and installing brake pipe 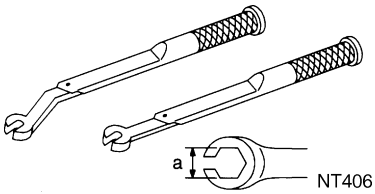 NT406
KV99102000 Output rod gauge	Adjusting brake booster output rod dimensions 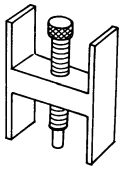 ZZA0756D

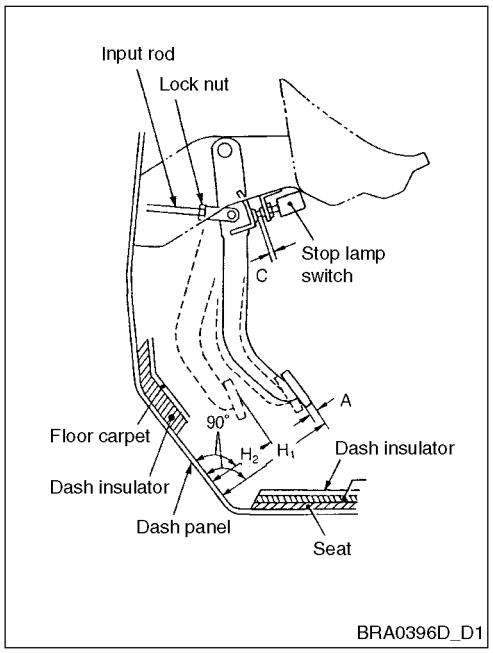

On-Vehicle Inspection and Adjustment

Adjust the height from the dash panel to the brake pedal upper surface according to the values below.

H1	Pedal height	M/T	156.0 - 166.0 mm
		A/T	164.9 - 174.9 mm
H2	Pedal height when depressed (While engine running and depressing by force of 490 N (50 kg))	M/T	More than 84.8 mm
		A/T	More than 91.5 mm
A	Pedal free play		3.0 - 11.0 mm
C	Clearance between the stopper rubber and stop lamp switch end		0.3 - 1.0 mm

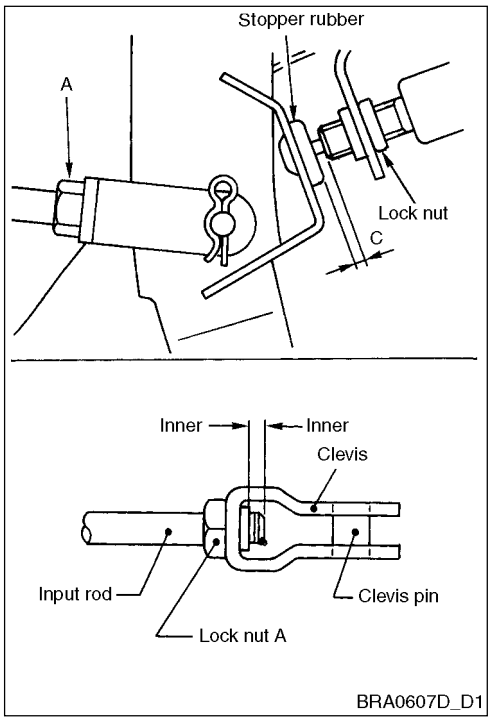

1. Loosen the lock nut and to loosen the stop lamp switch.
2. Loosen the lock nut A of the input rod and tighten the lock nut A by rotating the input rod and adjusting the pedal to the specified height.

CAUTION:

- **Check if the thread end of the input rod is inside of the clevis.**

Tightening torque: 11.8 - 14.7 N•m (1.2 - 1.5 kgf-m)

3. Push the switch in until the stop lamp switch end touches the stopper rubber while pulling and holding the pedal with hand.
4. Tighten the lock nut while the stopper switch end is inserted into the stopper rubber.

CAUTION:

- **Check if the clearance (C) between the stopper rubber and stop lamp switch end is within the standard value.**

5. Inspect the pedal free play.

CAUTION:

- **Check if the stop lamp is off when releasing the pedal.**

6. Start the engine and inspect the height while depressing the brake pedal.

Removal • Installation

COMPONENTS DIAGRAM

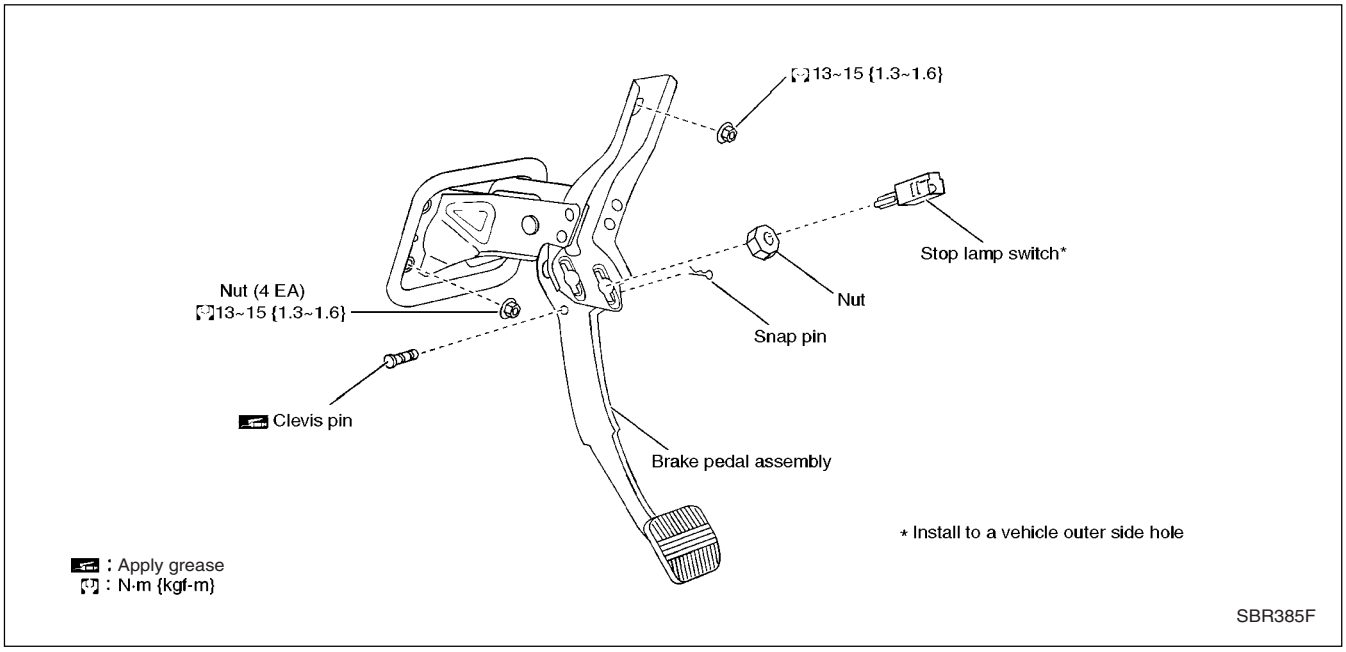

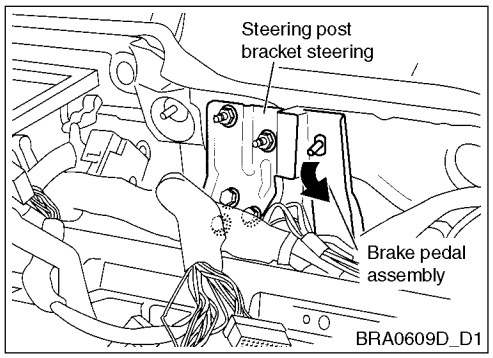

1. Remove the steering column assembly from the steering member.
2. Remove the pedal assembly from the vehicle by tilting towards the right avoiding the steering post bracket steering.

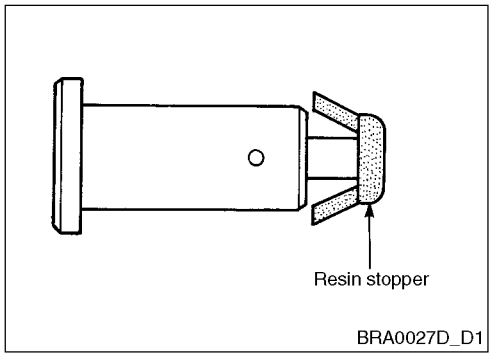

INSPECTION AFTER REMOVAL

Regarding the brake pedal, check below items.

- Brake pedal bending.
- Clevis pin deformation.
- Cracks in welding section.
- Crack or deformation in clevis pin stopper.

INSTALLATION

Install in the reverse order of removal by cautioning as below.

- Adjust the brake pedal after installing the brake pedal assembly to the vehicle.

Brake Fluid Change

CAUTION:

- **Use a brake fluid “DOT3” or “DOT4”.**
- **Do not reuse the drained brake fluid.**
- **Do not stain the brake fluid to the painted surface. If stained, wipe out with water immediately to avoid damages in the paint.**

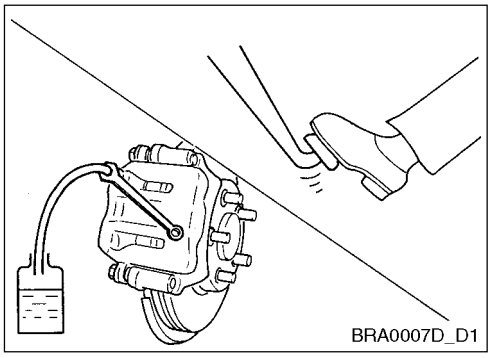

1. Connect a vinyl tube to the air bleeder.
2. Depress the brake pedal and drain out the brake fluid from the air bleeder for all wheels.
3. Remove the ABS actuator connector while the key switch is OFF.

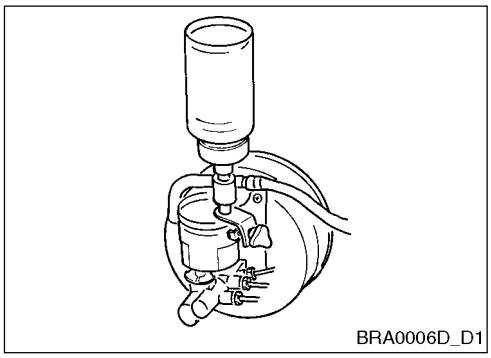

4. Check for any foreign particles in the reservoir tank and fill in the new brake fluid.
5. Connect a vinyl tube to the air bleeder.
6. Release the air bleeder and depress the pedal slowly until the full stroke and then release. Repeat this operation until the new brake fluid comes out with 2 to 3 seconds interval and then lock the air bleeder while depressing the brake pedal. Refer to “Air Bleeding” (BR-8) to bleed air.

Air Bleeding

CAUTION:

- **Perform the air bleeding while watching the master cylinder fluid level.**

1. Remove the ABS actuator connector while the key switch is OFF.
2. Connect a vinyl tube to the air bleeder.
3. Fully depress the brake pedal 4 to 5 times.
4. Loosen the air bleeder and bleed the air while depressing the brake pedal.
5. Close the air bleeder.
6. Slowly release the brake pedal.
7. Tighten the air bleeder to the specified torque.

   Tightening torque: 6.9 - 8.8 N•m (0.7 - 0.9 kgf-m)
8. Perform the air bleeding according No. 2 - 7 steps while maintaining the master cylinder reservoir tank level over the half.
9. Perform the air bleeding from right rear wheel, left front wheel and right front wheel in order.
   - Do not loosen the actuator connection while bleeding air.

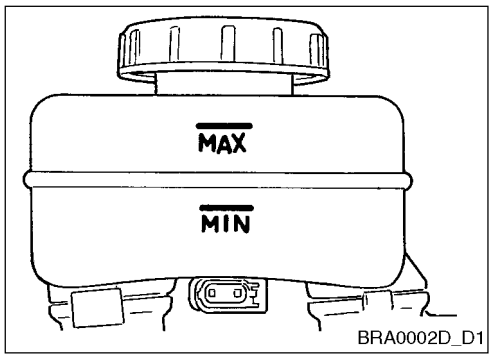

Fluid Level Inspection

- Check if the fluid level is within the specified range (between MAX and MIN marks).
- Inspect for any leakages around the reservoir tank.
- If the fluid level is extremely low, inspect the brake system for any leakage.
- If the brake warning light does not turn off when releasing the parking brake, inspect the brake system for any leakage.

Brake Hydraulic Line

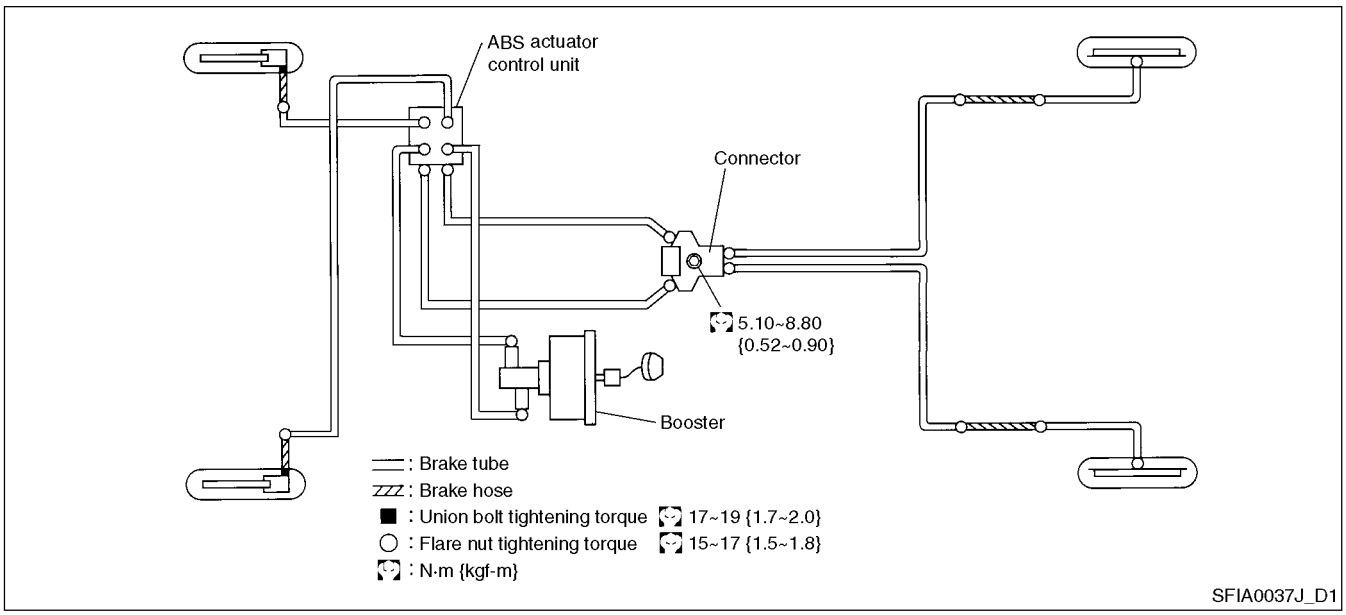

Removal • Installation of Front Brake Piping • Brake Hose

REMOVAL

CAUTION:

- **Do not stain the brake fluid to the painted surface. If stained, wipe out with water immediately to avoid damages in the paint.**
- **Do not bend, twist or pull the brake hose too hard.**
- **Cover the brake fluid line connections to prevent from foreign particles such as dust enter into the connections.**

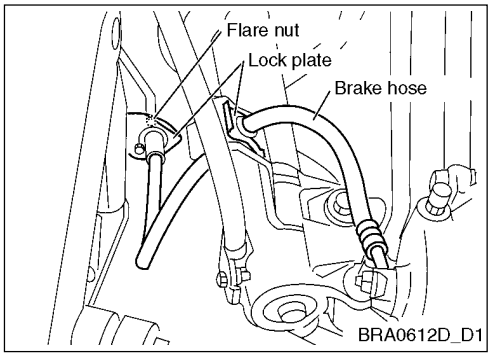

1. Connect a vinyl tube to the air bleeder.
2. Depress the brake pedal and drain the brake fluid from the air bleeder for all wheels.
3. Remove the brake tube flare nut using a flare nut wrench and disconnect it from the brake hose.
4. Remove the union bolt and disconnect the caliper assembly from the brake hose.
5. Remove the lock plate from the brake tube and strut mounting sections and remove the brake hose.

INSTALLATION

CAUTION:

- **Use a brake fluid “DOT3” or “DOT4”.**
- **Do not reuse the drained brake fluid.**

1. Install the brake hose to the caliper assembly and tighten the union bolt to the specified torque.

CAUTION:

- **Install the brake hose securely to the cylinder body protrusion.**
- **The copper washer of the union bolt cannot be reused. Do not reuse.**

2. Install the brake hose to the strut and fix it to the lock plate.
3. Install the brake hose to the brake tube and fix it to the lock plate by tightening the flare nut with hand as much as possible.
4. Tighten to the specified torque using a flare nut torque wrench.

   Tightening torque: 15 - 17 N•m (1.5 - 1.8 kgf-m)
5. Add fluid until new brake fluid comes out from every air bleeders.
6. Perform air bleeding after operation. Refer to “Air Bleeding” (BR-8).

Removal • Installation of Rear Brake Piping • Brake Hose

REMOVAL

CAUTION:

- **Do not stain the brake fluid to the painted surface. If stained, wipe out with water immediately to avoid damages in the paint.**
- **Do not bend, twist or pull the brake hose too hard.**
- **Cover the brake fluid line connections to prevent from foreign particles such as dust enter into the connections.**

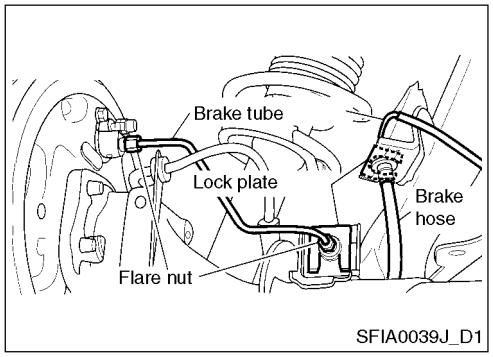

1. Connect a vinyl tube to the air bleeder.
2. Depress the brake pedal and drain out the brake fluid from the air bleeder for all wheels.
3. Remove the brake tube flare nut using a flare nut wrench and disconnect it from the brake hose.
4. Remove the lock plate and remove the brake hose from the vehicle.

INSTALLATION

CAUTION:

- **Use a brake fluid “DOT3” or “DOT4”.**
- **Do not reuse the drained brake fluid.**

1. Install the brake hose to the brake tube and tighten the flare nut with hand as much as possible.
2. Fix the brake hose to the lock plate and tighten the flare nut to the specified torque using a flare nut torque wrench.

   Tightening torque: 15 - 17 N•m (1.5 - 1.8 kgf-m)

3. Add fluid until new brake fluid comes out from every air bleeders.
4. Perform air bleeding after operation. Refer to “Air Bleeding” (BR-8).

INSPECTION

CAUTION:

If leakage occurs at connections, tighten again or replace the component if defective.

1. Inspect the hose, tube and connections for any leakage, damage, twists, deformation, interference with other components and any looseness in connections.
2. Depress the brake pedal with the force of 80 kg while engine running for 5 seconds by checking for any leakages from the components.

Removal • Installation

CAUTION:

Do not stain the brake fluid to the painted surface. If stained, wipe out with water immediately to avoid damages in the paint.

REMOVAL

1. Connect the vinyl tube to the air bleeder.
2. Drain out all brake fluid from every wheel bleeders by depressing the brake pedal and empty the master cylinder.
3. Remove the fluid level sensor harness connector.
4. Disconnect the brake tubes from the master cylinder using a flare nut wrench.
5. Release the mounting nuts and remove the master cylinder assembly from the vehicle.

INSTALLATION

CAUTION:

Use a brake fluid “DOT3” or “DOT4”.

Do not reuse the drained brake fluid.

1. Install the master cylinder to the brake cylinder and tighten the mounting nut lightly.
2. Tighten to the specified torque.
   Tightening torque: 15 - 17 N•m (1.5 - 1.8 kgf-m)
3. Fully fill the new brake fluid to the reservoir tank.
4. Block every port of the master cylinder with finger to prevent air inlet.
5. Let a helper depress the brake pedal 4 to 5 times slowly until no more air comes out from the master cylinder. Be careful not to let air go in while releasing the brake pedal.
6. Install the tube to the master cylinder.
7. Tighten the brake tube flare nut to the specified torque using a flare nut torque wrench.
   Tightening torque: 15 - 17 N•m (1.5 - 1.8 kgf-m)
8. Perform air bleeding to the brake system. Refer to “Air Bleeding” (BR-8).

Disassembly • Assembly

DISASSEMBLY DIAGRAM

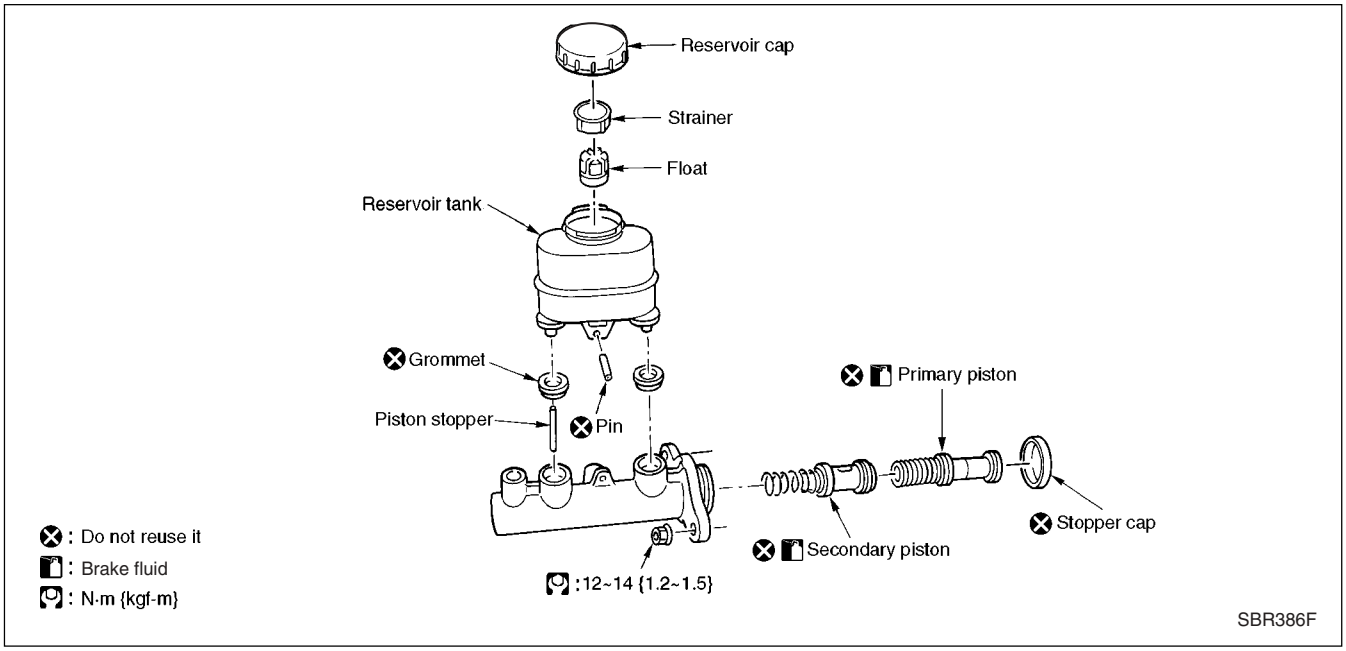

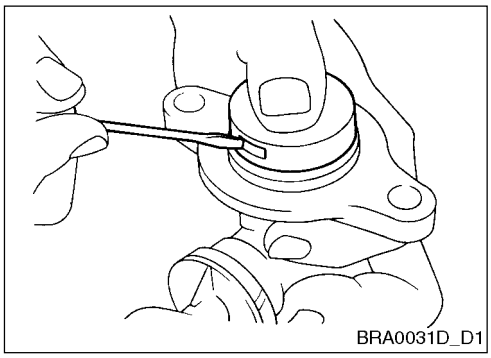

DISASSEMBLY

1. Remove the stopper cap from the master cylinder by inserting the minus (-) screwdriver to the stopper cap groove. The piston in the master cylinder may spring out during removal, so remove the cap carefully by pushing it.

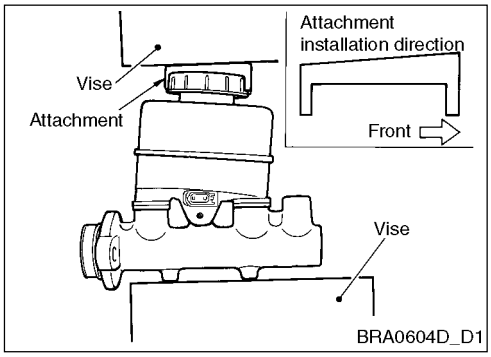

2. Install the inner cutter attachment to the reservoir cap as shown in the illustration.

CAUTION:

- **Be careful of the attachment direction when installing it to the reservoir cap.**

3. Secure the master cylinder assembly on the vise. Tighten the pins so that the reservoir tank and cylinder body mounting pins do not touch the reservoir tank pin insertion port.

CAUTION:

- **Secure to the vise so that the cylinder body pin insertion port surface faces upwards.**
- **Do not excessively tighten the master cylinder assembly with the vise. Or it may be damaged.**

4. Remove the reservoir tank mounting pin using a pin punch (commercial tool, 4 mm dia.).
5. Remove the master cylinder assembly.
6. Remove the reservoir tank from the cylinder body.

7. Push in the piston using a plus (+) screwdriver and remove the piston stopper from the cylinder body.
8. Remove the primary piston assembly carefully without damaging the cylinder inner wall.

9. Remove the secondary piston assembly carefully without damaging the cylinder inner wall by gently tapping the flange with wood or so.

INSPECTION AFTER DISASSEMBLY

Inspect the followings.

MASTER CYLINDER

Inspect the cylinder inner wall for any damage, wear, rust and pin hole and replace it defective.

PISTON

Inspect the piston cup for any deformation or damages and replace if defective.

ASSEMBLY

CAUTION:

Never use any mineral oil such as gasoline or kerosene for cleaning.

Check the cylinder inner walls, piston and cup seals for any foreign particles such as dust and be careful not to be damaged by tools during installation.

Do not drop the components. If dropped, do not reuse the component.

1. Apply the brake fluid “DOT3” or “DOT4” at the cylinder body inner surfaces and piston assembly contacting surfaces. Insert the secondary piston assembly into the cylinder body and then insert the primary piston assembly.

CAUTION:

The primary and secondary piston assembly cannot be reused. Do not reuse.
Replace the inner parts as an assembly.
Be careful of the piston cup installation direction and insert it carefully not to be caught by the cylinder inner walls.

2. Visually check the secondary piston slot from tank boss hole on secondary side in cylinder boy and install the piston stopper.

3. Install the stopper cap. Press the piston with new stopper cap until it firmly seats on the cylinder grooves.

CAUTION:

The stopper cap cannot be reused. Do not reuse.

4. Apply the brake fluid “DOT3” or “DOT4” on the grommet and install it by pushing into the master cylinder.

CAUTION:

The grommet cannot be reused. Do not reuse.

5. Install the inner cutter attachment to the reservoir cap as in the removal.

CAUTION:

Be careful of the attachment installation direction.

6. Install the reservoir tank to the cylinder body so that the arrow direction faces front the vehicle and secure by tightening until all the pin inserts are matched.

CAUTION:

Secure to the vise so that the cylinder body pin insertion port surface faces upwards.

Do not excessively tighten the master cylinder assembly with the vise. Or it may be damaged.

7. Install the reservoir tank mounting pins using a pin punch (commercial tool, 4 mm dia.).

CAUTION:

The reservoir tank mounting pin cannot be reused. Do not reuse.

Insert the pin from installation surface on the cylinder body pin insertion hole.

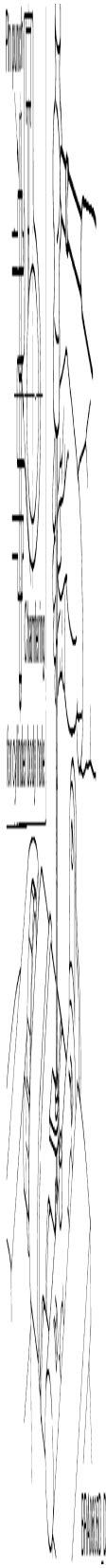

On-Vehicle Inspection and Service

OPERATION INSPECTION

While engine stopped, depress the brake pedal several times in 5 seconds interval until the vacuum pressure becomes the atmospheric pressure conditions. Start the engine while brake pedal fully depressed and inspect if the brake pedal lowers when the vacuum pressure becomes standard value.

AIR INSPECTION

Apply vacuum pressure to the booster by running the engine in idle for about 1 minute. Stop the engine and inspect if the pedal travel increases as depressing the brake pedal once, twice and tree times in 5 seconds interval.

Depress the brake pedal while engine running. Then stop the engine while depressing the brake pedal. The pedal should not move at least 30 seconds.

Removal • Installation

REMOVAL

CAUTION:

Be careful not to deform or bend the brake tube while removing the brake booster.

Replace the clevis pin if defective.

Be careful not to damage the brake booster stud bolt threads. If installed abnormally, the threads can be damaged in the dash panel.

Be careful of the check valve directions.

1. Remove the vacuum pipe from the brake booster.

2. Remove the master cylinder.
3. Remove the clevis pin and snap pin from the vehicle interior and remove the input rod from the brake pedal.
4. Remove the mounting nuts from the brake booster and brake pedal.
5. Remove the booster assembly from the engine room.

Inspection After Removal

OUTPUT ROD LENGTH INSPECTION

1. Apply -66.7 kPa (-500 mmHg) of vacuum pressure to the booster using a vacuum handy pump.
2. Install the output rod gage (special tool) to the master cylinder and rotate the screw until the gage end touches the primary piston.
3. Secure the A part so that the clearance between the output rod and screw becomes 0 by reversing the output rod gage (special tool). Then adjust from B part.

   Reference value when vacuum pressure is -500 mmHg:

   10.4 mm

INSTALLATION

1. Adjust the input rod length by loosening the lock nut so that the value B in the illustration becomes the standard value.

   Standard value B: 127 mm
2. After adjusting the value B, insert the lock nut and install the booster assembly to the vehicle.
3. Connect the brake pedal and clevis on the input rod.
4. Install the pedal assembly mounting nut and tighten to the specified torque.
5. Install the master cylinder to the booster assembly.
6. Adjust the brake pedal height and free play.
7. Tighten the input rod lock nut to the specified torque.
8. Perform the air bleeding. Refer to “Air Bleeding” (BR-8).

Removal • Installation

CAUTION:

Perform installation following the installation direction of vacuum hose stamp or label because the check valve is built in the vacuum hose. If installed in the reverse direction, the booster will not operate properly. Be careful not to reverse the direction.

Push the vacuum hose for more than 24 mm.

Do not use any lubricants during installation.

Inspection

EXTERIOR INSPECTION

Inspect for any wrong installation, damages or quality problems.

Check Valve Inspection

OPERATION INSPECTION

The check valve is built in the vacuum hose. Thus it is normal if air flows when blown from the booster side and if air does not flow when blown from the opposite side as in the illustration.

CAUTION:

If the vacuum hose is defective, replace it with the check valve.

AIR INSPECTION

Inspect using a vacuum handy pump (commercial tool).

When connected to the booster (1)

The vacuum should leak less than 10mmHg during 15 seconds when -500 mmHg of vacuum is applied.

When connected to the engine (2)

No vacuum pressure.

Components Diagram

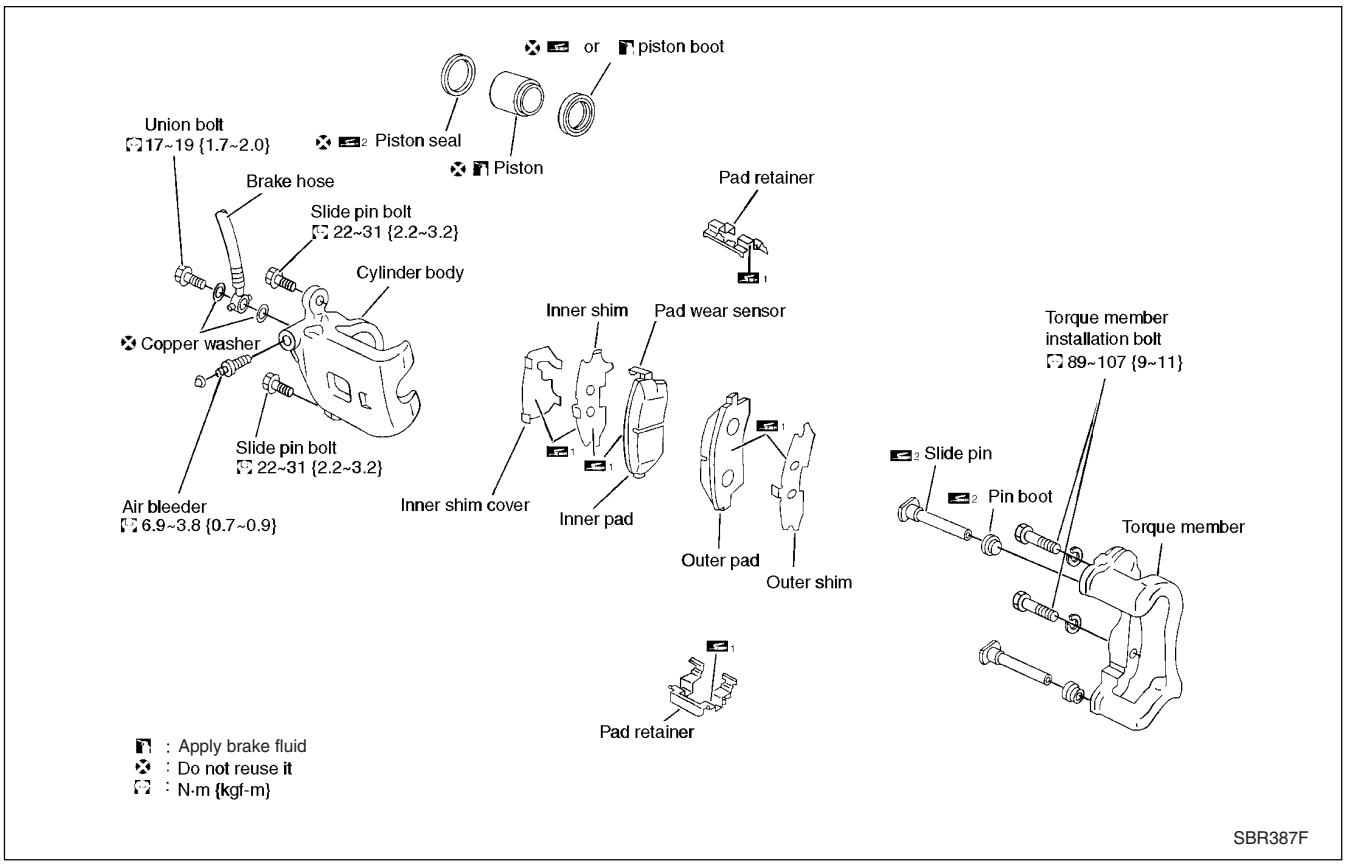

REFERENCE:

- **Remove all brake dust covered on the caliper and pads using a dust collector. Do not scatter the dust using an air blower.**

CAUTION:

- **The piston can suddenly spring out when the cylinder body is removed. So, do not depress the brake pedal.**
- **There is no need to remove the mounting bolts for the torque member and brake hose except for caliper assembly disassembly or replacement. Hang the cylinder body with wire to prevent the brake hose from stretching.**
- **Be careful not to damage the piston boot and stain the brake fluid to the rotor.**
- **Always replace the brake pad with the inner shim, outer shim and shim cover.**

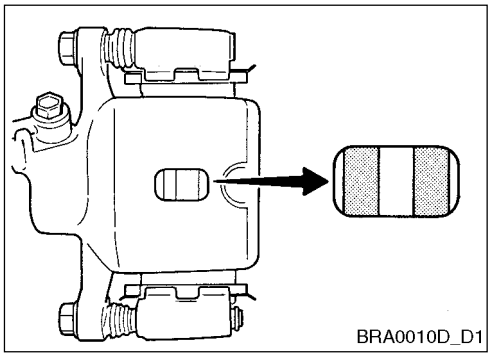

On-Vehicle Inspection and Service

PAD WEAR INSPECTION

Remove the wheels while vehicle is lifted up and inspect the pad thickness through the inspection hole on the cylinder body. Inspect using a scale if required.

Standard thickness: 11 mm

Wear limit: 2.0 mm

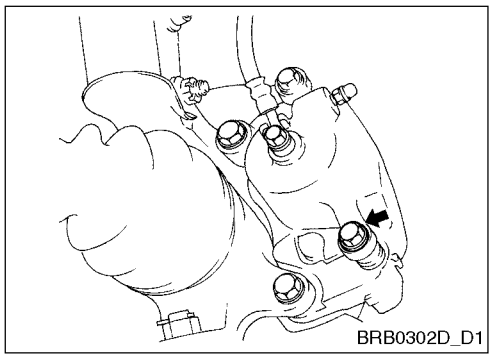

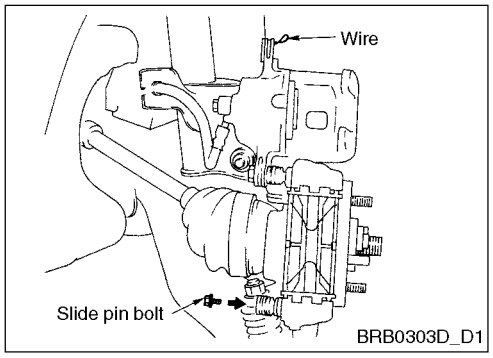

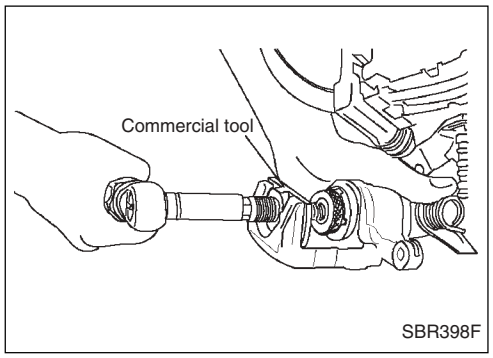

Removal • Installation of Brake Pad

REMOVAL

CAUTION:

- **Always replace the brake pad with the inner shim, outer shim and shim cover.**

1. Remove the cap from the master cylinder reservoir tank.
2. Remove the slide pin bolt (1 EA, underneath).
3. Hang the cylinder body with a wire and remove the pad, pad retainer and the shim.

INSTALLATION

1. Install the inner shim and shim cover to the inner pad and outer shim to the outer pad.
2. Push in the brake piston using the commercial tool, apply the PBC (Poly Butyl Cuprysil) grease or silicone-based grease on the pad section on the pad retainer and install the pad retainer and the pad to the torque member.
3. Install the cylinder body to the torque member.

CAUTION:

- **While replacing the pad, the brake fluid returns to the master cylinder reservoir tank as pushing the piston to install the pad. Thus be careful of the brake fluid level in the reservoir tank.**

4. Insert the slide pin bolt (1 EA, underneath) and tighten to the specified torque.
5. Inspect the brake operation (slip).

Removal • Installation of Caliper Assembly

REMOVAL

1. Connect the vinyl tube to the air bleeder.
2. Depress the brake pedal and drain out the brake fluid from the air bleeder slowly.

3. Remove the union bolt and torque member mounting bolts and remove the caliper assembly from the vehicle.
4. Remove the disc rotor.

INSTALLATION

CAUTION:

Use a brake fluid “DOT3” or “DOT4”.

Do not reuse the drained brake fluid.

1. Install the disc rotor.
2. Install the caliper assembly to the vehicle and tighten the mounting bolts to the specified torque.

CAUTION:

Remove all oil materials from the trailing arm washer contacting surface and caliper assembly contacting surfaces while installing the caliper assembly to the vehicle.

3. Install the brake hose to the caliper assembly and tighten the union bolts to the specified torque.

CAUTION:

The union bolt copper washer cannot be reused. Do not reuse.

Securely install the brake hose to the protrusion on the cylinder body.

4. Perform the air bleeding. Refer to “Air Bleeding” (BR-8).

Disassembly • Assembly of Caliper Assembly

REMOVAL

WARNING:

Be careful not to catch the finger in the piston.

CAUTION:

Be careful not to scratch the cylinder inner wall.

1. Insert a wood rod as in the illustration and remove the piston and piston boot by blowing air into the union nut mounting hole.
2. Remove the piston seal using a minus (-) screwdriver.

Caliper Inspection

CYLINDER BODY

CAUTION:

Use new brake fluid while cleaning and never use mineral oil such as gasoline and kerosene.

Inspect the cylinder inner wall for rust, wear and damages and replace the cylinder body if defective.

Remove the minute scratches by rust and foreign particles using fine sandpaper. Replace the cylinder body if needed.

TORQUE MEMBER

Inspect for any wear, crack or damages and replace if defective.

PISTON

CAUTION:

Do not use sandpaper for piston surfaces since it has painted.

Inspect the piston surfaces for any rust, wear and damages and replace if defective.

SLIDE PIN • PIN BOLT • PIN BOOT

Inspect the slide pin and slide pin boot for any wear, damages or cracks and replace if defective.

Run-Out Inspection

1. Fix the disc rotor on the wheel hub using wheel nut (At least 2 points).
2. Measure the run-out using a dial gage.

   Measuring point: Within 10 mm from the disc end

   Run-out limit: CL22VK: Less than 0.04 mm

CAUTION:

Check if the endplay of the axle is 0 mm before measurement.

3. If the run-out value is out of the limit, reinstall the disc rotor and wheel hub by changing the locations and find a location with minimum vibration.

THICKNESS INSPECTION

Measure the disc rotor thickness using a micrometer and replace if out of the standard value.

Standard thickness: 22.0 mm

Wear limit: 20.0 mm

Uneven wear limit (When measured 8 points):

Less than 0.02 mm

FRONT DISC GRINDING

CAUTION:

Inspect the disc rotor thickness before operation and check if it is over 0.3 mm than wear limit value.

Wear respirator and safety goggles during grinding.

Remove the grinding dust using a dust collector and do not scatter the dust with the air blower.

Be careful not to get caught by the rotating parts during operation.

1. Lift the vehicle while gear position at N range. Inspect the wheel bearing for any defect and remove the wheel.
2. Place the brake caliper assembly in location that does not interfere with the steering knuckle.

CAUTION:

Do not depress the brake pedal while the brake caliper is removed.

3. Install the drive adaptor (commercial tool) to the disc rotor and tighten using the conical link and wheel nut. Install all wheel nuts at this moment.

CAUTION:

When installing the drive adaptor (commercial tool), align with the hub center axle.

4. Install the slide attachment (commercial tool) to the brake caliper assembling section on the steering knuckle.

5. Install the rubber band (commercial tool) erases noise at the disc rotor bench.

6. Install the grinder to the disc rotor by cautioning as below.

   Insert the grinder so that its center matches with the center of the disc rotor.

   Adjust the operation direction with the disc rotor's rotational axis.

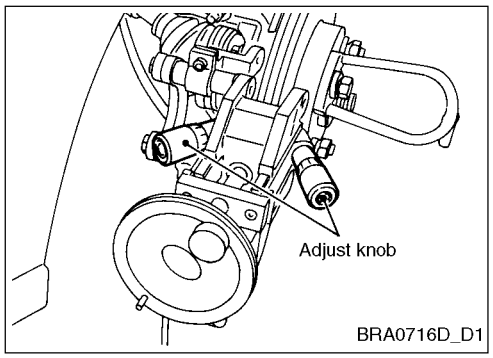

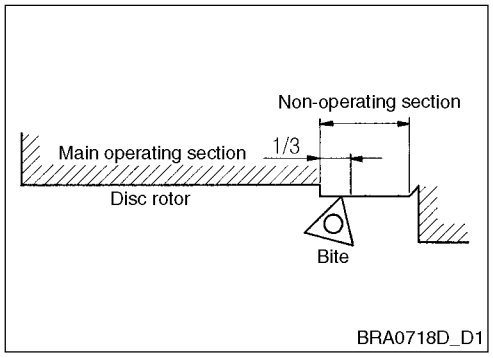

7. Place the grinder within 10 mm from the end of the disc rotor by rotating the adjust knob on the grinder. Perform operation by rotating the disc rotor with the hand.

REFERENCE:

- **When the bite contacts the disc rotor, it generates slight grinding noise.**

8. Move the bite to the grinding start position (1/3 of non-operating section).
9. Install the drive unit (commercial tool) to the drive adaptor (commercial tool).

CAUTION:

- **Adjust (stable rotation) the disc rotor's height and direction so that its axis becomes the same as the rotational axis and motor rotational axis.**

10. By rotating drive unit, grind towards outer direction from where cut 0.05 mm forwards and backwards (1/2 dial movement) by grinder.

CAUTION:

- **Do not cut automatically facing the center from the outer side.**

11. After finishing the front face, grind again facing the outer side by putting the grinder's dial at 0.02 mm (about 1/4 movement).
12. For the last, scrub with No. 500 sandpaper (contact the flat surface) gently for 10 seconds.
13. Check if the run-out is within the limit value when measured within 10 mm from the end of the disc rotor using the dial gage.
14. Remove the disc rotor and remove the grinding dust at the sensor rotor and wheel speed sensor using a dust collector.

CAUTION:

- **Put a alignment mark on the disc rotor and wheel hub when removing the disc rotor.**
- **Do not scatter the dust using the air blower.**
- **The wheel speed sensor has more dust since it is magnetized. So, remove the dust thoroughly.**

15. Remove the anti-noise rubber band from the disc rotor.
16. Install the disc rotor, brake caliper and the wheel.

CAUTION:

- **When installing the disc rotor, align it to alignment mark.**

ASSEMBLY

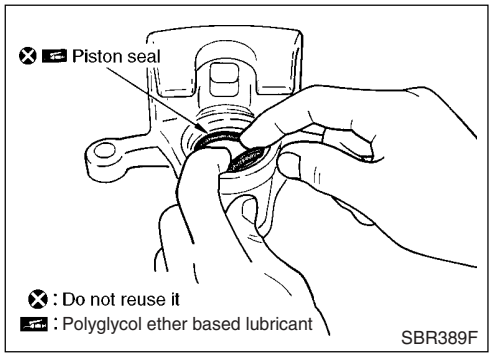

CAUTION:

- **Do not use rubber grease during installation.**

1. Apply the polyglycol ether based lubricant on the piston seal and install it to the cylinder body.

CAUTION:

- **The piston seal cannot be reused. Do not reuse.**

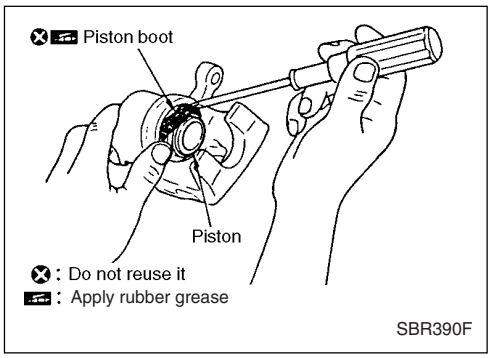

2. Apply the rubber grease on the piston boot and install it to the end of the piston and then install the cylinder side surface of the piston boot to the groove in the cylinder body.

CAUTION:

- **The piston boot cannot be reused. Do not reuse.**

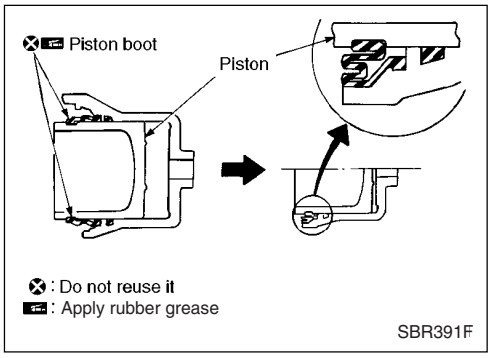

3. Apply the brake fluid “DOT3” or “DOT4” to the piston. Securely install the piston surface on the piston boot to the piston groove by pressing the cylinder body with hand.

CAUTION:

- **During piston installation, uniformly install the piston by changing the pressing locations to not scratch the cylinder inner wall.**

Components Diagram

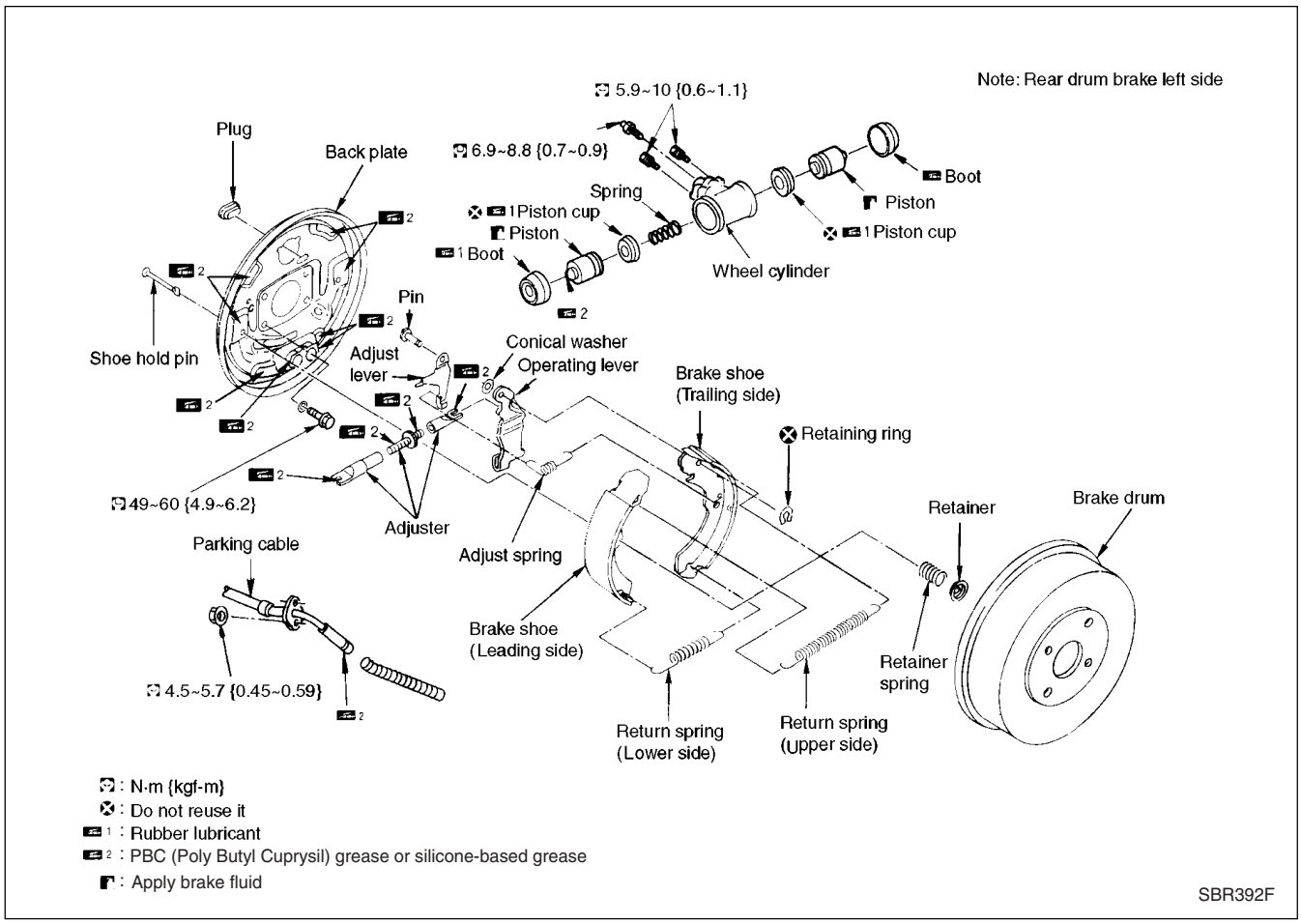

CAUTION:

- **Remove the dust in the drum and back plate with the dust collector. Do not scatter the dust with air blower.**

CAUTION:

Check if the parking brake lever has released fully.

Removal • Installation of Drum Brake Assembly

REMOVAL

1. Remove the wheel and remove the brake drum after releasing the parking brake lever. Remove as follows when the brake drum does not come out.

   a. Remove the plug. Contract the extended shoe by rotating the adjust assembly wheel toward contraction direction with a screwdriver from adjuster hole (the plug hole beside the wheel cylinder) in the back plate as shown in the illustration.

   b. When the brake drum and wheel hub are stuck to each other, insert 2 bolts (8 mm) in the hole on the drum and tighten them to remove the drum as in the illustration.

2. Remove the shoe hold pin by pushing and rotating the retainer and remove in the order of leading shoe and trailing shoe. Rotate the shoe in the arrow direction and remove the spring.

CAUTION:

Do not damage the wheel cylinder piston boot.

3. Remove the adjuster.

4. Remove the parking brake cable from the toggle lever.

CAUTION:

Be careful not to bend the parking cable.

5. Remove the retaining ring using proper tool. Disconnect the toggle lever from the brake shoe.

Inspection After Removal

LINING THICKNESS INSPECTION

Inspect the lining thickness with a scale.

Standard value: 4.5 mm

Limit value: 1.5 mm

DRUM INNER DIAMETER INSPECTION

Inspect the drum inner diameter with a vernier caliper.

Standard inner diameter	LT20B	203.0 mm
Inner diameter limit	LT20B	204.5 mm

WHEEL CYLINDER FLUID LEAKAGE INSPECTION

Inspect the fluid leakage from the wheel cylinder.

Inspect for any wear, damage or looseness. Replace if defective.

OTHER INSPECTIONS

Visually inspect the drum for any abnormal wear, cracks or damages.

Visually inspect the lining for any abnormal wear, damages or come off.

Are there any defective wear or damage in shoe's main moving part?

Is the return spring extended too much?

Is the adjuster operating smoothly?

Visually inspect the back plate for any damages, cracks or deformations.

Inspect the back plate if there is any looseness in mounting bolts using a wrench.

INSTALLATION

1. When the toggle lever is removed, install as in the below order.
   a. Apply the PBC (Poly Butyl Cuprysil) grease or silicone- based grease on the toggle lever's main operating part and install the toggle lever and conical washer to the brake shoe.
   b. Install the retaining ring to the toggle lever and adjust until the mating sections come in proper contact.

CAUTION:

The retaining ring cannot be reused. Do not reuse.

2. Apply the PBC (Poly Butyl Cuprysil) grease or silicone-based grease on the back plate, main moving part of the shoe and the arrowed locations.

3. When the adjuster is disassembled, apply the PBC (Poly Butyl Cuprysil) grease or silicone-based grease on threads and install after checking the differences between the left and right wheels.

LT20B

Right rear wheel	Groove (Illustration)	No
	Thread direction	Right handed screw
Left rear wheel	Groove (Illustration)	Yes
	Thread direction	Left handed screw

4. Connect the parking brake cable to the toggle lever.
5. After installing the removed parts, check if they are installed as specified.

CAUTION:

Be careful not to damage the wheel cylinder piston boot.

Be careful of the adjuster assembly directions.

6. Measure the inner diameter of the drum and adjust the adjuster wider so that the central outer diameter of the shoe is smaller than the inner diameter of the drum by 0.35 - 0.55 mm (LT20B).
7. Install the brake drum.
8. Perform air bleeding when installing a new wheel cylinder or overhauling the wheel cylinder. Refer to “Air Bleeding” (BR-8).
9. Adjust the parking brake. Refer to “Adjustment” (BR-36).

Removal • Installation of Wheel Cylinder

REMOVAL

1. Remove the rear brake shoes.
2. Remove the brake tube from the wheel cylinder.
3. Remove the wheel cylinder mounting bolts and remove it from the back plate.

INSTALLATION

Install in the reverse order of removal and tighten to the specified torque.

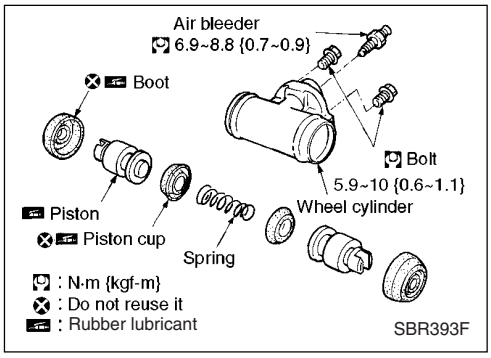

Disassembly • Assembly of Wheel Cylinder

DISASSEMBLY

1. Remove the left and right dust boot from the wheel cylinder and remove the piston from the cylinder.
2. Remove the piston cup from the piston.

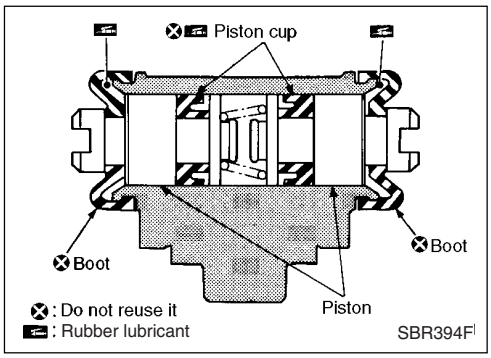

ASSEMBLY

CAUTION:

- **Do not use any rubber grease during assembly.**

1. Apply the brake fluid on the main moving part of the piston in the wheel cylinder.
2. Apply the rubber lubricant on the cup and the boot and then install as illustrated.

Wheel Cylinder Inspection

Check the piston, piston cup and cylinder inside wall for any wear, rust or damages. Replace if defective.

CAUTION:

- **Be careful not to damage the cylinder during piston insertion.**

Components Diagram

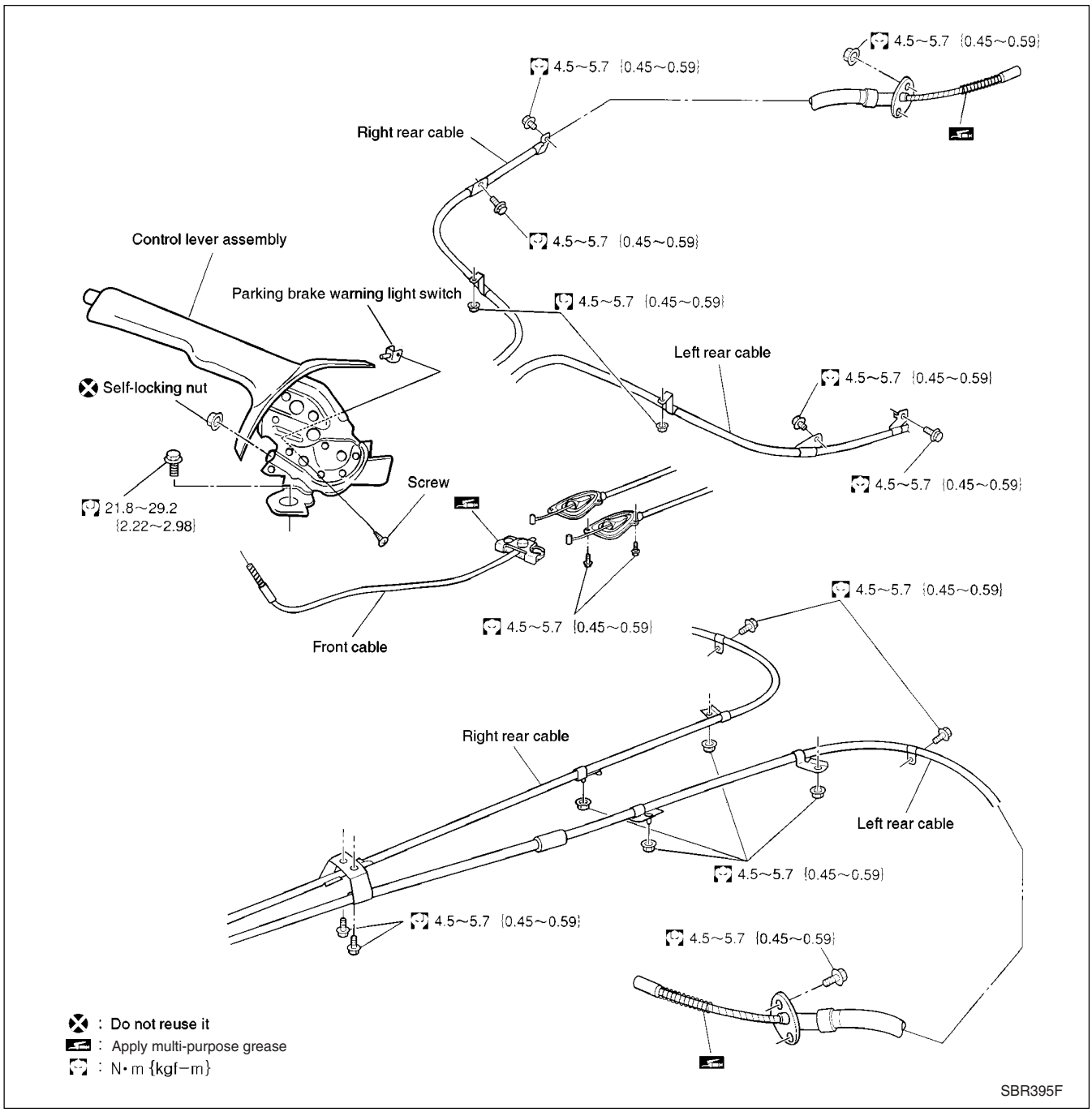

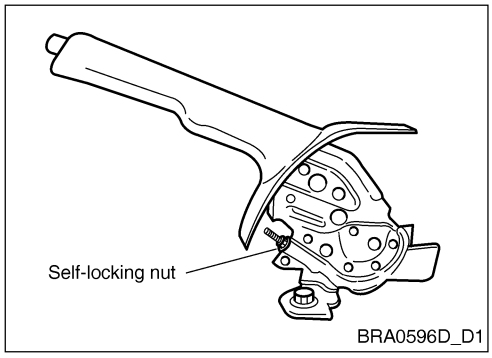

Removal • Installation

1. Remove the center console.
2. Disconnect the warning light switch connector.
3. Remove the cable mounting bolts. Remove the self lock nut after loosening the cable.
4. Remove the brake shoes if equipped with drum brake and remove the cable from the toggle lever.

Inspection

When pulled the lever with the force of 20 kg, check if the number of notches (check by the latchet engaging sound) is as per specified.

When pulled: 8 to 9 notches

Inspect if the rear wheel braking force is within the specified value using a brake tester.

Braking force: More than 20% of vehicle weight

Parking lever effort: Less than 40 kg

Inspect the parking lever assembly for any bents, damages and cracks and replace if defective.

Inspect the cable and equalizer for any wears and damages and replace if defective.

Inspect the parking brake warning light switch and replace if defective.

Inspect all components and check for any deformations and damages by interference with other components and replace if defective.

Adjustment

IF EQUIPPED WITH REAR DRUM BRAKE

1. Loosen the cable sufficiently by rotating the self lock nut using a deep socket wrench and adjust the clearance of the rear shoes by restoring the lever.
2. Repeat the parking lever manipulation until the adjuster sound (“click” sound) disappears.
3. Check for any pulling by rotating the rear wheel.
4. Adjust the cable as below after adjusting rear shoe clearance and without pulling in rear brake.
   a. Pull the lever so that the deep socket can enter.
   b. Insert the deep socket wrench into the open section in the lever and adjust the lever pulling by rotating the self lock nut.

CAUTION:

The self lock nut cannot be reused. Do no reuse it after removal.

   c. Inspect the notch numbers after pulling the lever 3 to 4 times with 20 kg of force.
   d. Check for any rear brake pulling when the lever is fully released.

General

SYSTEM DIAGRAM

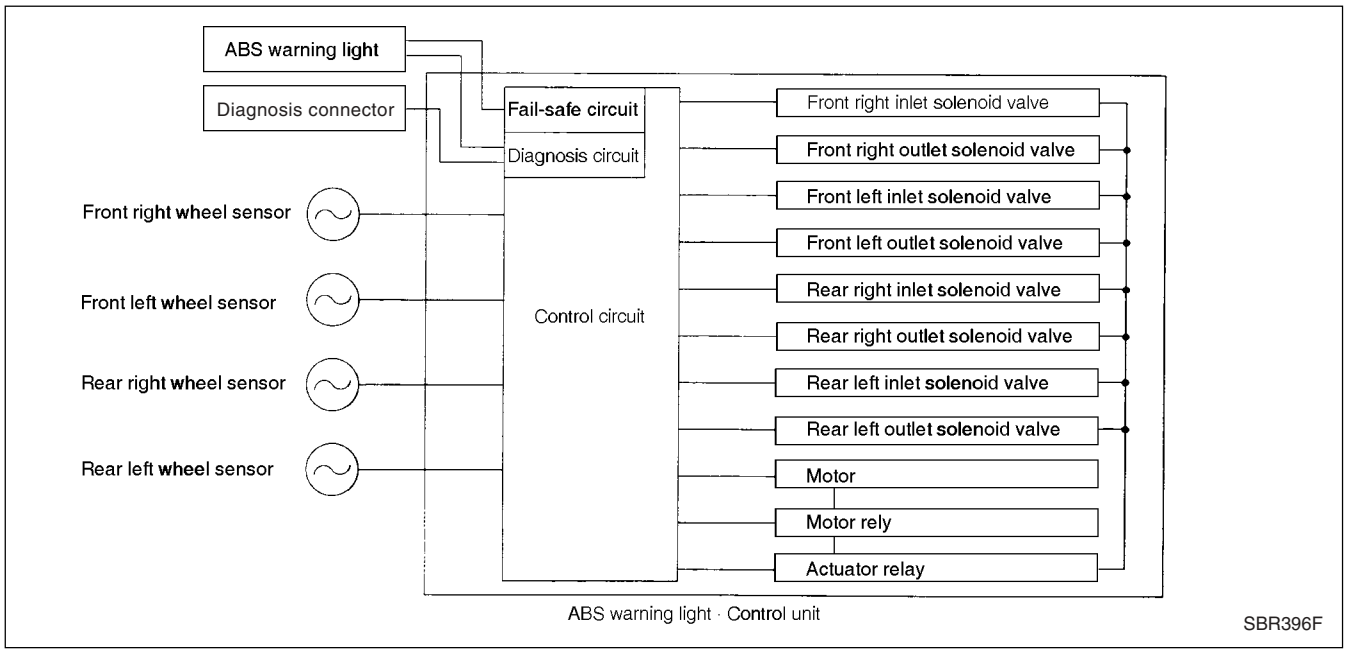

Fail-Safe

When trouble occurs in the ABS system, the "ABS Warning Light" turns on in the meter and the ABS control is suspended simultaneously. So the brake system works as a non-ABS vehicle.

Hydraulic Circuit Diagram

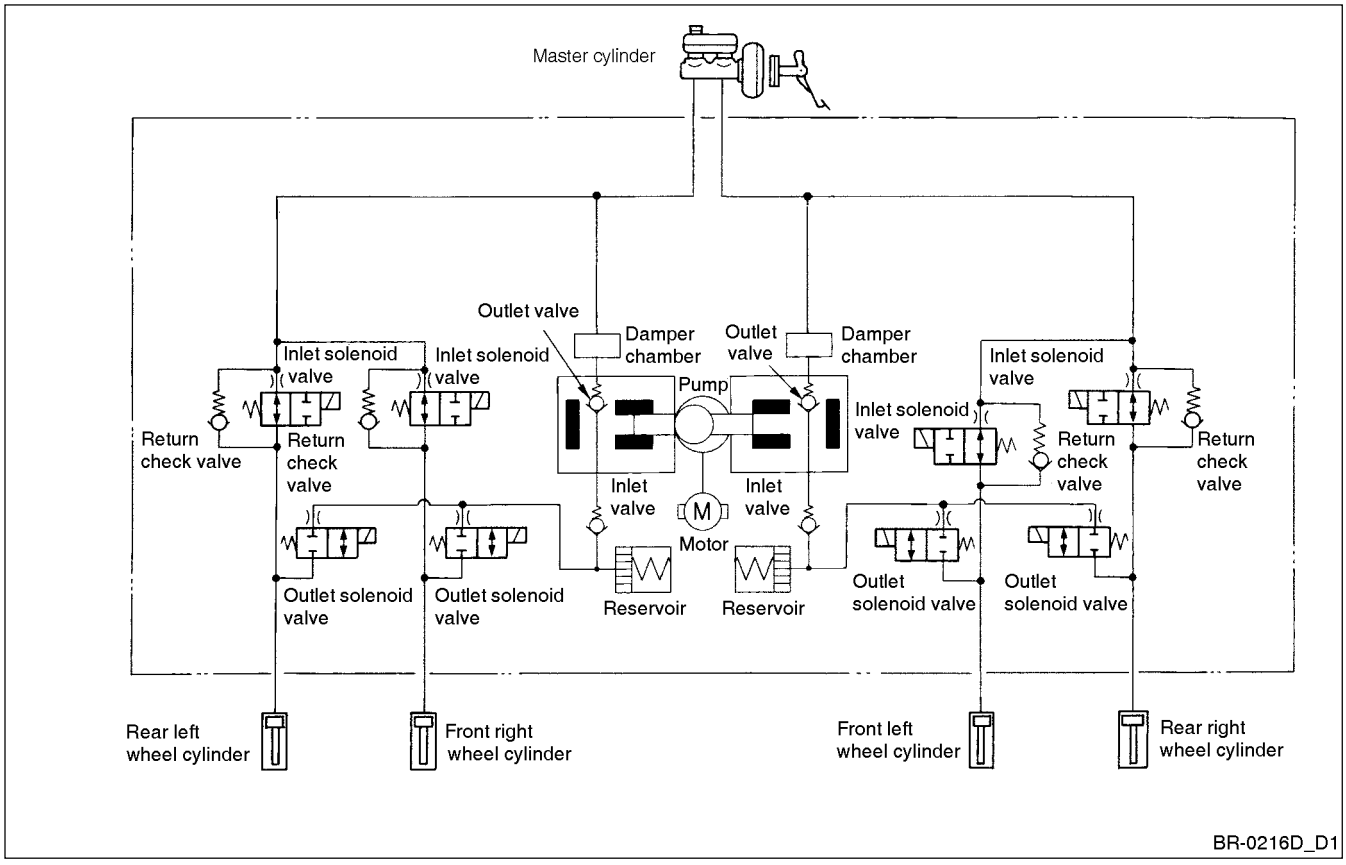

System Components

Circuit Diagram

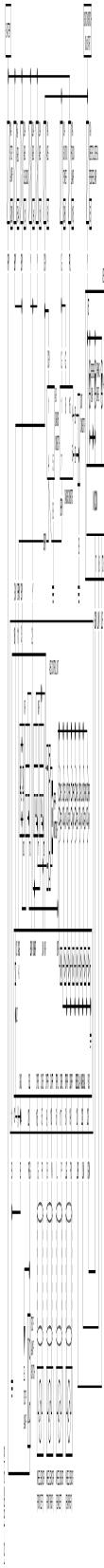

How to Diagnose

BASIC DIAGNOSIS

The most important thing for trouble diagnosis is to understand the vehicle's system (control system and mechanical systems) thoroughly.

Verify the customer's complaints before performing any inspection. In order to do this, you need to duplicate or simulate the symptom and fully understand the symptom. Isolate the possible causes and sometimes checking by riding with the customer may be necessary.

CAUTION:

It is dangerous to determine quickly just by listening to the customer's opinion. The customer is not a professional.

In order to fix the troubles, you need to first identify the symptoms.

For the intermittent symptoms, duplicate or simulate them based on questions and answers and previous service data. Sometimes, shaking the harness or connector could be a good way to duplicate or simulate the intermittent symptom. If a technician go on repairing or replacing without identifying symptoms based on his/her own judgment, it will not result in correct or permanent fix.

Erase the stored memory after finishing the diagnosis.

For the malfunctions cannot be duplicated, shake the harness and harness connectors with hand to check for any defective contacts or open circuits.

Read "General Information" before service and follow the general instructions.

Diagnosis Flow

QUESTIONING POINTS
What ..... Vehicle and engine model
When ..... Time and frequency
Where ..... Road conditions
Conditions ..... Driving conditions and environment
How ..... Symptoms

QUESTIONNAIRE

In order to determine the trouble symptom, it is necessary to ask questions on customer's concern.

Above questions are very important to identify the symptom and isolate the cause. Use collected information to simulate the trouble symptoms.

It is good to use the diagnosis sheet to record all information.

DIAGNOSIS SHEET SAMPLE

Customer Name		Registration No.				Registration Year Month Day
Engine No.		Vehicle Type				V.I.N
Check-in Date		Engine Model T/M Type				Mileage (km)
Symptom	☐ Pedal vibration and strange noise	☐ Warning light turns on	☐ Stopping distance is long	☐ Abnormal pedal movement	☐ ABS does not work	☐ ABS works too often
Engine Conditions		☐ When starting ☐ After starting ☐ At above 5000 RPM				
Road Conditions		☐ Road (☐ Snow ☐ Gravel ☐ Others) ☐ Others ☐ Bumpy road				
Driving Conditions		☐ High-speed cornering ☐ Above 10 km/h ☐ Below 10 km/h ☐ Stopped ☐ At idle				
Braking		☐ Gradually ☐ Abruptly				
Others		☐ Too much pedal stroke ☐ ☐				

Components Location

Control Unit Input/Output Signal Standards (With CONSULT-II)

CAUTION:

Control unit displays calculated data. So it may display the normal value even when the output circuit (harness) has short or open circuit.

Monitor Item	Data monitor		Inspecting item when defective
	Conditions	Reference value when normal	
ABS WARN LAMP (ON-OFF)	Turning ON/OFF of the ABS warning light	Warning light ON (Note 1): ON Warning light OFF (Note 1): OFF	ABS warning light route
STOP LAMP SW	Brake pedal operation	Brake pedal depressed: ON Brake pedal released: OFF	Stop lamp switch and its route (ON-OFF)
MOTOR RELAY (ON-OFF)	Motor relay Motor relay operation	Motor and motor relay operate: ON Motor and motor relay do not operate: OFF	ABS motor and motor relay
ACTUATOR RLY (ON-OFF)	Actuator relay	Actuator relay operate: ON Actuator relay does not operate (Under fail-safe): OFF	ABS actuator
FR LH SENSOR FR RH SENSOR RR LH SENSOR RR RH SENSOR	Wheel speed	Vehicle stopped: 0 [km/h] Vehicle running: Almost in accordance with speedometer display (with in ±10%)	Wheel sensor route
FR RH IN SOL FR LH IN SOL RR RH IN SOL RR LH IN SOL (ON-OFF)	Solenoid operation	Actuator (Under solenoid operation) : ON	ABS solenoid route
FR RH OUT SOL FR LH OUT SOL RR RH OUT SOL RR LH OUT SOL (ON-OFF)		Actuator (Solenoid) does not operate (Vehicle stopped): OFF	
BATTERY VOLT	Power voltage supplied to the control unit (Key switch ON)	Approx. 10 - 16 V	Control unit power route

(Note 1): ABS warning light ON/OFF timing.

Light ON: For about 1 second after the key switch turned ON or when trouble is detected.

Light OFF: About 1 second after the key switch turned ON (When system is normal).

CONSULT-II APPLICATION TO ABS

Item	Self-diagnosis	Data monitor	Active test
FR RH SENSOR	X	X	-
FR LH SENSOR	X	X	-
RR RH SENSOR	X	X	-
RR LH SENSOR	X	X	-
STOP LAMP SWITCH	X	X	-
FR RH IN ABS SOL	X	X	X
FR RH OUT ABS SOL	X	X	X
FR LH IN ABS SOL	X	X	X
FR LH OUT ABS SOL	X	X	X
RR RH IN ABS SOL	X	X	X
RR RH OUT ABS SOL	X	X	X
RR LH IN ABS SOL	X	X	X
RR LH OUT ABS SOL	X	X	X
ACTUATOR RELAY	-	X	X
PUMP MOTOR RELAY	X	X	X
MAIN RELAY	X	-	-
ABS WARNING LAMP	-	X	-
BATTERY VOLTAGE	X	X	-
CONTROLLER FAILURE	X	-	-
ABS SENSOR	X	-	-

X: Applicable
- : Not applicable

Self-Diagnosis

DIAGNOSIS PROCEDURE

1. Perform the “Preliminary Check” (BR-53) after collecting information from the customer.
2. Turn the key switch OFF and connect the CONSULT-II connector to the vehicle’s diagnosis connector.
3. Start the engine and drive for about 1 minute at 30 km/h.
4. Stop the vehicle. Select “START (X-BADGE VHCL)” and “ABS” in order from CONSULT-II while engine running.

CAUTION:

When the “START (X-BADGE VHCL)” is selected right after engine start or turning the key switch to ON, the “ABS” may not be display on “SELECT SYSTEM”. In this case, start from the step 2.

5. The self-diagnosis results will be displayed.

   The current and past troubles will be displayed.
6. Perform the corresponding inspection from display and repair or replace the defective components.
7. After correcting the defect, delete the self-diagnosis results from the control unit by pressing “ERASE”.

   If cannot erase the detected failure, drive the vehicle at 30 km/h and then try “ERASE” again.

CAUTION:

If cannot erase the memory, perform step 6.

8. Check if the warning light is turned off.
9. Test the ABS operation in a safe place after coming out of the diagnosis mode.

CAUTION:

The ABS does not work while ABS diagnosis.

DISPLAY LISTS

Suspect systems	Malfunction detecting condition
FR RH SENSOR-1	Circuit of FR RH wheel sensor is open or shorted.
FR LH SENSOR-1	Circuit of FR LH wheel sensor is open or shorted.
RR RH SENSOR-1	Circuit of RR RH wheel sensor is open or shorted.
RR LH SENSOR-1	Circuit of RR LH wheel sensor is open or shorted.
FR RH SENSOR-2	When there is a sensor power voltage error in the FR RH wheel sensor, and when the control unit cannot recognize sensor pulse because gap between wheel sensor and sensor rotor is large.
FR LH SENSOR-2	When there is a sensor power voltage error in the FR LH wheel sensor, and when the control unit cannot recognize sensor pulse because gap between wheel sensor and sensor rotor is large.
RR RH SENSOR-2	When there is a sensor power voltage error in the RR RH wheel sensor, and when the control unit cannot recognize sensor pulse because gap between wheel sensor and sensor rotor is large.
RR LH SENSOR-2	When there is a sensor power voltage error in the RR LH wheel sensor, and when the control unit cannot recognize sensor pulse because gap between wheel sensor and sensor rotor is large.
ABS SENSOR	When a rotation sensor signal error is detected in one or more of the four wheels, and when operation of one or more of the wheels continues beyond the specified time.
FR RH IN ABS SOL	Displays when control unit detects error in FR RH IN SOL system.
FR LH IN ABS SOL	Displays when control unit detects error in FR LH IN SOL system.
RR RH IN ABS SOL	Displays when control unit detects error in RR RH IN SOL system.
RR LH IN ABS SOL	Displays when control unit detects error in RR LH IN SOL system.
FR RH OUT ABS SOL	Displays when control unit detects error in FR RH OUT SOL system.
FR LH OUT ABS SOL	Displays when control unit detects error in FR LH OUT SOL system.
RR RH OUT ABS SOL	Displays when control unit detects error in RR RH OUT SOL system.
RR LH OUT ABS SOL	Displays when control unit detects error in RR LH OUT SOL system.
MAIN RELAY	Displayed when control unit detects malfunction in solenoid valve relay system.
PUMP MOTOR	Displays when control unit detects errors in motor or motor relay system.
BATTERY VOLTAGE	Battery voltage of control unit is too high.
	Battery voltage of control unit is too low.
STOP LAMP SWITCH	Stop lamp switch circuit is open.
CONTROLLER FAILURE	Processing function of control unit is malfunctioning.

Note 1: The ABS warning light turns ON for 10 to 80 seconds (varies depending on spinning speed) if wheel spins on the slippery road such as snow and rain. However, it is not malfunction.

Note 2: When the ABS warning lamp does not turn off after turning on the key switch after repairing the sensor short circuit, then drive the vehicle for about 1 minute at about 30 km/h. Be sure to check the turning off of the ABS warning light.

Data Monitor

Refer to CONSULT-II operation manual for data monitor function details.

MONITORING PROCEDURE

1. Turn the key switch OFF.
2. Connect the CONSULT-II connector to the vehicle's diagnosis connector.
3. Turn the key switch ON.
4. Select "START (X-BADGE VHCL)" from the display.
5. Select "ABS" from the display.

CAUTION:

When the "START (X-BADGE VHCL)" is selected right after engine start or turning the key switch to ON, the "ABS" may not be display on "SELECT SYSTEM". In this case, start from the step 2.

6. Select "DATA MONITOR"
7. Press "START" after selecting "ECU INPUT SIGNALS", "MAIN SIGNALS" or "SELECTION FROM MENU" from "SELECT MONITOR ITEM".
8. Perform data monitor.

DATA MONITOR MODE

Monitor Item	Status	Description
FR RH SENSOR	Under driving (All 4 wheels are rotating)	When the speed is the same as the speedometer, then the speed identical to the vehicle speed will be outputted.
FR LH SENSOR		
RR RH SENSOR		
RR LH SENSOR		
STOP LAMP SW	Depress the brake	Pedal depressed: ON Pedal released: OFF
FR RH IN SOL	Engine is running	ABS operates: ON ABS does not operate: OFF NOTE: The ABS does not work during diagnosis, so the OFF is normal.
FR RH OUT SOL		
FR LH IN SOL		
FR LH OUT SOL		
RR RH IN SOL		
RR RH OUT SOL		
RR LH IN SOL		
RR LH OUT SOL		
ACTUATOR RLY		Ignition switch ON: ON Ignition switch OFF: OFF
MOTOR RLY	Ignition switch is ON or engine is running	ABS operates: ON ABS does not operate: OFF NOTE: The ABS does not work during diagnosis, so the OFF is normal.
BATTERY VOLT		The voltage to the control unit is displayed.
ABS WARN LAMP	Ignition switch ON or engine is running	Warning lamp is turned on: ON Warning lamp is turned off: OFF

Monitor Item	Status	Description
EBD SIGNAL	Engine is running	EBD operates: ON EBD not operate: OFF
ABS SIGNAL	Engine is running	ABS operates: ON ABS not operate: OFF
EBD FAIL SIG	Engine is running	Malfunctions condition: ON Normal: OFF
ABS FAIL SIG	Engine is running	Malfunctions condition: ON Normal: OFF

CAUTION:

The ABS does not work during diagnosis.

Active Test

TEST PROCEDURE

CAUTION:

Do not perform the active test while driving.

Check if the air bleeding has completed.

Active test cannot work when ABS warning light is ON.

1. Connect the CONSULT-II connector to the diagnosis connector and start the engine.
2. Select “START (X-BADGE VHCL)” from the display.
3. Select “ABS”.
4. Select “ACTIVE TEST”.
5. Test item selection screen is displayed.
6. Touch necessary test item.

DISPLAY LISTS

ABS Solenoid Valve

Select “UP (Increase)”, “KEEP (Hold)” or “DOWN (Decrease)” and inspect from the display whether the ABS solenoid valve (inlet and outlet) is working as below.

Operation	ON	OFF
Inlet ABS solenoid valve	Operating	Not operating
Outlet ABS solenoid valve	Operating	Not operating

REFERENCE:

When the active test is performed while pedal depressed, the pedal depressing value may change, but it is normal.

If there is no input for 10 seconds from the start of the test, it will automatically turned off.

ABS MOTOR

Press ON or OFF from the display and inspect if the ABS motor relay operates as below.

Operation	ON	OFF
ABS motor	ON	OFF

REFERENCE:

Determine the normal operation of motor with the operating sound and brake pedal vibration during motor operation.

Preliminary Check

BRAKE FLUID LEVEL • LEAKAGE INSPECTION

1. Inspect the brake reservoir tank's level. If low, add the brake fluid.
2. Inspect the brake piping and ABS actuator surroundings for any leakage. If leakage or spreading is present, inspect the items as below.

   When the ABS actuator connection is loose, then tighten the piping to the specified torque. Re-inspect for any leakage and check if no leakage is present.

   When the connection flare nut or ABS actuator bolt is damaged, replace the damaged components. Re-inspect for any leakage and check if no leakage is present.

   When other than the ABS actuator connections has leakage or spreading, wipe out the leakage or spreading with a clean cloth. Re-inspect for any leakage and replace the components that cause leakage or spreading.

   When ABS actuator assembly has leakage or spreading, wipe out the leakage or spreading with a clean cloth. Re-inspect for any leakage and replace the ABS actuator control unit if leakage or spreading is present.

CAUTION:

The actuator assembly is a non-disassembling component. Do not disassemble.

POWER SYSTEM TERMINAL LOOSENESS INSPECTION

Check the battery positive (+) terminal, negative (-) terminal and battery ground for looseness.

ABS WARNING LIGHT INSPECTION

1. Check if the ABS warning light turns on when turning the key switch ON. If not ON, then inspect the ABS warning light route.
2. Check if the warning light turns OFF about 3 seconds after turning the key switch ON. If not OFF, then perform the self-diagnosis.
3. Check if the ABS warning light is turned OFF after about 1 minute of driving at about 30 km/h. If the light is still ON, then perform the self-diagnosis.
4. After performing the self-diagnosis, always erase the stored memory.

Wheel Speed Sensor System

INSPECTION TIPS

The defective wheel speed sensor location can be determined by the CONSULT-II self-diagnosis results.

1. START OF INSPECTION

Wheel speed sensor inspection

Go to step 2.

2. CONNECTOR INSPECTION

1. Disconnect the control unit and defective wheel speed sensor connector. Inspect if the terminal has deformed and if the connector is imperfectly connected. Connect the connector.
2. Perform the self-diagnosis.

Does the ABS warning light turn on?

YES Go to step 3.

NO End.

3. WHEEL SPEED SENSOR CIRCUIT INSPECTION

1. Disconnect the control unit connector.
2. Measure the resistance between the terminals. (Measure the resistance when rotating the steering wheel from left to right and moving the sensor harness inside the wheel house.)

   Front right side: Terminal No. 9 - No. 10

   Front left side: Terminal No. 16 - No. 5

   Rear right side: Terminal No. 8 - No. 19

   Rear left side: Terminal No. 6 - No. 17

   Resistance

   Front: 1.44 - 1.76 k

   Rear: 1.05 - 1.35 k

Inspection results are OK?

YES Go to step 5.

NO Go to step 4.

4. WHEEL SPEED SENSOR INSPECTION

Measure the internal resistance of the wheel speed sensor.

Resistance

Front: 1.44 - 1.76 k

Rear: 1.05 - 1.35 k

Inspection results are OK?

YES Repair the harness and the connector between the control unit and wheel speed sensor.

NO Replace the wheel speed sensor.

5. TIRE INSPECTION

Inspect for the tire pressure, wear and size.

Is the tire pressure, wear or size within the standard value?

YES Go to step 6.

NO Adjust the air pressure. Or replace the tires.

6. SENSOR ROTOR INSPECTION

Inspect the sensor rotor gear for any damages.

Inspection results are OK?

YES Check the control unit terminal for any damages, and check if the connector is connected properly. Re-connect the connector and re-inspect.

NO Replace the sensor rotor.

Control Unit Power System

INSPECTION TIPS

Disconnect the ABS actuator control unit connector and inspect the system connections and voltage between vehicle side connector terminals and body ground.

Terminal No.	Signal	Measurement	Value
2, 3, 18	Power	Key switch ON	Power voltage
1, 4	Ground	Key switch OFF	System connection present

ABS Works Frequently

1. START OF INSPECTION

Inspect the braking force distribution.

Inspection results are OK?

YES Go to step 2.

NO Inspect the brake system.

2. WHEEL SPEED SENSOR INSPECTION

1. Inspect if the wheel speed sensor's connector has any deformation, and check if the connector is connected imperfectly.
2. Inspect the wheel speed sensor. Refer to "Wheel Speed Sensor System" (BR-54).

Does the wheel speed sensor work properly?

YES Go to step 3.

NO Repair.

3. FRONT AXLE INSPECTION

Inspect for any rattling noise in the front and rear axle.

Inspection results are OK?

YES Perform step 3 "Warning Light Inspection" in "The Brake Pedal Is Abnormal" (BR-57).

NO Repair.

The Brake Pedal Is Abnormal

1. BRAKE PEDAL STROKE INSPECTION

Inspect the brake pedal stroke.

Is the brake pedal stroke too large?

YES Perform the air bleeding for the brake piping.
Inspect the brake system.

NO Go to step 2.

2. CONNECTOR INSPECTION AND PERFORMANCE INSPECTION

Disconnect the ABS actuator control unit connector and inspect if the braking performance is appropriate when ABS is not operating.

Connect the connector after inspection.

Inspection results are OK?

YES Go to step 3.

NO Inspect the brake system.

3. WARNING LIGHT INSPECTION

Inspect if the warning light comes on while driving.

Inspection results are OK?

YES Go to step 4.

NO Perform self-diagnosis. Refer to “Diagnosis Procedure” (BR-49).

4. WHEEL SPEED SENSOR INSPECTION

1. Inspect if the wheel speed sensor’s connector terminal is deformed or if the connector is imperfectly connected.
2. Inspect the wheel speed sensor. Refer to “Inspection Tips” (BR-54).

Is the wheel speed sensor operating properly?

YES Inspect if the control unit connector terminal is deformed or if the connector is imperfectly connected. Then connect the connector and re-inspect.

NO Repair.

Stopping Distance Is Too Long

CAUTION:

On the slippery roads, the ABS equipped vehicle may have longer stopping distance then the non-ABS vehicles.

1. CONNECTOR AND PERFORMANCE INSPECTION

Disconnect the ABS actuator control unit’s connector and inspect the stopping distance while ABS is not operating. Connect the connector after inspection.

Inspection results are OK?

YES Perform the air bleeding for the brake piping.
Inspect the brake system.

NO Perform step 3 in “The Brake Pedal Is Abnormal” (BR-57).

ABS Does Not Work

CAUTION:

The ABS does not work if driving speed is less than 10 km/h.

1. WARNING LIGHT INSPECTION

Check the ABS warning light operation.

Does the ABS warning light operate?

YES Perform self-diagnosis. Refer to “Diagnosis Procedure” (BR-49).

NO Perform step 3 in “The Brake Pedal is Abnormal” (BR-57).

Pedal Vibration and Noise

CAUTION:

Under gentle braking (just stepping on the pedal), ABS operation and vibration can be felt but it is normal.

During shifting or clutch operation.

While driving on slippery roads.

When cornering at a high speed.

When passing through a protrusion or grooved road (more than 50 mm).

When accelerating right after engine starting (approx. over 10 km/h).

1. START OF INSPECTION

Inspect pedal vibration and noise.

Go to step 2.

2. SYMPTOM INSPECTION

Apply the brake and start the engine.

Does the symptom appear when starting the engine?

YES Perform self-diagnosis. Refer to “Diagnosis Procedure” (BR-49).

NO Go to step 3.

3. SYMPTOM RE-INSPECTION

Check the symptom when operating the electrical system component (such as headlamp) switch.

Does the symptom occur when operating the electrical system component (such as headlamp) switch?

YES Go to step 4.

NO Perform step 3 in “The Brake Pedal is Abnormal” (BR-57).

4. WHEEL SPEED SENSOR INSPECTION

Inspect the wheel speed sensor harness’s shield wire ground. Refer to “Wiring Diagram” for shield wire ground location.

Inspection results are OK?

YES Inspect if the control unit connector terminal is deformed or if the connector is imperfectly connected. Then connect the connector and re-inspect.

NO Repair.

Removal • Installation

CAUTION:

Be careful not to damage the sensor or rotor gear. During front and rear wheel hub installation, install the wheel speed sensor first to prevent its malfunction by damaged wire.

When removing, try not to rotate the sensor and do not remove by pulling the harness.

During installation, check if there are any foreign metal particles in the sensor pickup location, inside the sensor installation hole, or rotor contact surface. If so, remove all particles and then install. Tighten the mounting bolts and nuts to the specified torque.

Removal • Installation

REMOVAL

FRONT

1. Remove the drive shaft. Refer to “Removal • Installation” (FA-7).
2. Remove the sensor rotor from the drive shaft. Refer to “Disassembly • Assembly” (FA-9).

REAR

Remove the wheel hub and remove the sensor rotor. Refer to “Removal • Installation” (RA-4).

INSTALLATION

FRONT

1. Install the sensor rotor to the drive shaft. Refer to “Disassembly • Assembly” (FA-9).
2. Install the drive shaft. Refer to “Removal • Installation” (FA-7).

REAR

Install the sensor rotor to the wheel hub and install to the rear of the vehicle. Refer to “Removal • Installation” (RA-4).

Removal • Installation

REMOVAL

Perform by cautioning as below.

CAUTION:

Start the operation after disconnecting the battery terminal.

Use the flare nut wrench for brake tube removal and be careful not to damage the flare nut and brake tube. For installation, tighten to the specified torque using a flare nut torque wrench.

INSTALLATION

Perform by cautioning as below.

Tighten the mounting bolts and nuts to the specified torque.

After finishing the operation, perform air bleeding for the brake piping. Refer to “Air Bleeding” (BR-8).

Brake Operation Conditions

Braking Force

Sum of rear wheels	Over 10 % of the axle loads
Sum of left and right wheels	Over 8 % of the axle loads
Total	Over 50 % of the vehicle curb weight

Brake Pedal

Free play (From the top of the pedal)		3 - 11 mm
Clevis pin cover (From the top of the pedal)		1 - 3 mm
Pedal height (From the upper surface of the dash panel)	M/T	156.0 - 166.0 mm
	A/T	164.9 - 174.9 mm
Pedal height when depressed (Depressing force 490 N (50 kg)) (From the upper surface of the dash panel)	M/T	(84.8 mm)
	A/T	(91.5 mm)
Clearance between the stop lamp switch end and pedal stopper		0.3 - 1.0 mm

Check Valve

Vacuum leakage (Under 66.7 kPa (-500 mmHg) of vacuum pressure)	Less than 1.3 kPa (10 mmHg) of vacuum pressure for 15 seconds

Brake Booster (Vacuum Type)

Vacuum leakage (Under 66.7 kPa (-500 mmHg) of vacuum pressure)	Less than 1.3 kPa (10 mmHg) of vacuum pressure for 15 seconds
Input rod installation standard value	125 mm

Front Disc Brake

Brake Type		CL22VK
Pad	Standard thickness (When new)	11 mm
	Limit value	2 mm
Disc rotor	Standard thickness (When new)	22 mm
	Limit value	20 mm
	Run-out limit	0.4 mm

Rear Drum Brake

Brake Type		LT20B
Lining	Standard thickness (When new)	4.5 mm
	Limit value	1.5 mm
Drum	Standard inner diameter (When new)	203.0 mm
	Limit value	204.5 mm

Parking Brake

Pulling [By force of 196 N (20 kg)]	8 - 9 notches
Full stroke	18 notches
Brake warning light coming on stroke	Within 1 notch

Tightening Torque

Unit: N•m (kgf-m)

Master cylinder mounting nut	11.8 - 14.7 (1.2 - 1.5)
Front caliper mounting bolt	88.2 - 107.8 (9 - 11)
Brake tube flare nut	14.7 - 17.6 (1.5 - 1.8)