比亚迪 M6 轿车使用手册

Build Your Dreams

201003 版

www.bydauto.com.cn

Downloaded from www.Manualslib.com manuals search engine

Downloaded from www.Manualslib.com manuals search engine

Foreword

Thanks for choosing BYD M6. For better operation and service of your vehicle, please read this owner's manual carefully.

Powered by an EFI engine, BYD M6 features complicated wiring structure. Do not modify the vehicle or add other electric appliances such as burglar alarm, central door lock, power window regulator, speakers. Faults caused by the unauthorized modification to the vehicle are not covered by BYD warranty.

Pay close attention to and strictly follow the instructions under the titles of Caution and Notice to prevent personal injury and damage to the vehicle.

The classification of instructions is described below:

⚠ CAUTION
Caution statements are a description of potentially hazardous situation concerning personal and vehicle safety.

NOTICE
Notice statements are useful information on operation and maintenance of the vehicle.

The illustrations in this manual are for reference purpose only. Actual vehicles may vary from the description in the illustrations.

BYD AUTO Co., Ltd. reserve full rights to modify the features and contents in this manual without prior notice.

Your valuable comments and opinions will be warmly welcomed.

Safety Sign

The safety sign above means "DO NOT DO IT" or "DO NOT LET IT HAPPEN".

Content

Downloaded from www.Manualslib.com manuals search engine

Content

Chapter 1 Instruments & Control System 1-1
1.1 Keys & Doors 1-1
1.2 Safety Devices 1-27
1.3 Steering Wheel and Rearview Mirror 1-59
1.4 Switches 1-67
1.5 Instrument and Multifunction Display 1-75
1.6 Other Equipments 1-87
Chapter 2 Sound and A/C System 2-1
2.1 Sound System 2-1
2.2. Air Conditioning (A/C) System 2-11
Chapter 3 Before Driving 3-1
Chapter 4 Starting and Driving 4-1
Chapter 5 Emergency Handling 5-1
Chapter 6 Vehicle Maintenance 6-1
Chapter 7 Part Maintenance 7-1
Chapter 8 Maintenance Specifications 8-1

Downloaded from www.Manualslib.com manuals search engine

Parameters

Model		2.0L MT	2.4L AT
Basic structure		Two-box Monocoque body construction, 5 doors/1 roof/7 seats	
Driving configuration		Front transverse engine, front wheel drive	
Overall dimensions	Length (mm)	4820	
	Width (mm)	1810	
	Height (mm)	1765 (no-load)	
Wheel base (mm)		2960	
Track	Front (mm)	1550	
	Rear (mm)	1555	
Curb weight (kg)		1710	1760
Laden weight (kg)		2235	2285
Tire size		215/55 R17	
Approach angle (°)		19	
Departure angle (°)		18	
Front suspension (mm)		890	
Rear suspension (mm)		970	
Minimum ground clearance (mm)		≥150	
Turning diameter (m)		≤11.4	
Passenger capacity		7	

Downloaded from www.Manualslib.com manuals search engine

Model	2.0L MT	2.4L AT
Trunk capacity (L)	≥450	
Maximum Gradeability (%)	≥20	
Maximum speed (km/h)	≤180	≤185
Engine model	BYD483QB	4G69S4M
Engine configuration	In-line 4-cylinder/16 valves, MPI fuel injection, DOHC	In-line 4-cylinder/16 valves, MPI fuel injection, SOHC
Displacement (ml)	1991	2378
Maximum output (kw/rpm)	186/4000~4500	215/3500-4500
Emission standard	Euro III/Euro IV	Euro III/Euro IV

Parameters

Downloaded from www.Manualslib.com manuals search engine

BYD M6 Auto Identification

Vehicle Identification Number (VIN)

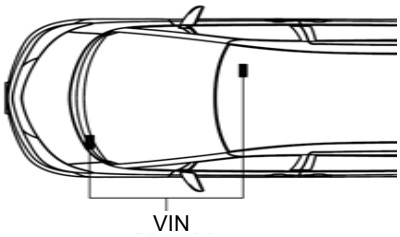

Two VIN plates on this vehicle are respectively located on the top left side of the instrument panel and on the floor crossmember under the front passenger seat, as shown in the figure above. VIN is a unique serial number used for registration of the vehicle owner.

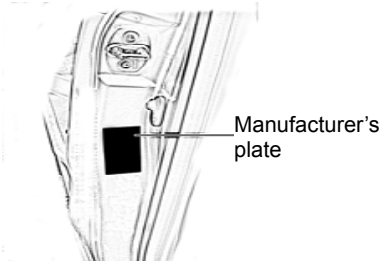

VIN is also printed on the manufacturer's plate at the bottom of the right side wall B-pillar, as shown in the figure above.

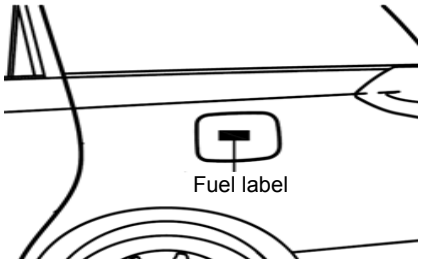

Fuel label is pasted on the inner side of the fuel filler cap, as shown in the figure above.

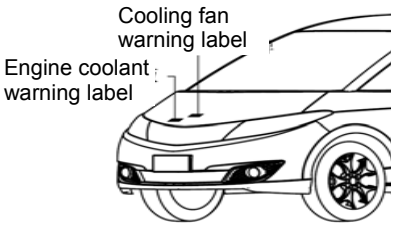

The warning labels to the cooling fan and change of engine coolant are pasted on the inside of the front compartment.

The warning label against seating a child in the front passenger seat is pasted on the right sun visor.

Downloaded from www.Manualslib.com manuals search engine

The front passenger airbag label is located on the right side of the instrument panel.

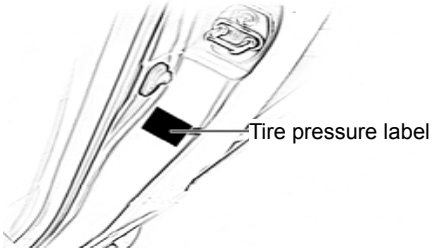

Tire pressure label is located near the bottom of the left B-pillar.

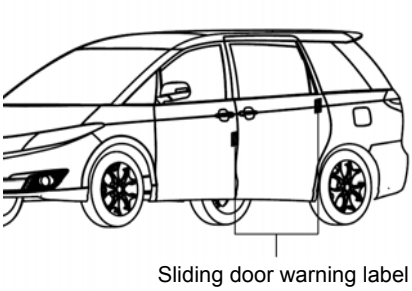

There are 4 door labels on this vehicle, which are located in the middle of the B-pillar outer surface and on the edge of the C-pillar trim panel in a symmetrical pattern.

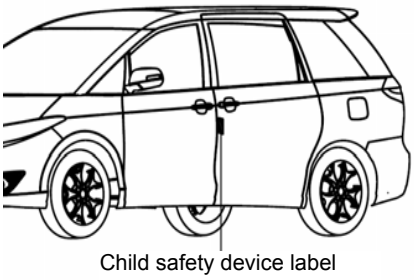

2 child safety device labels are pasted in the middle of the front surface of the sliding door metal sheet in a symmetrical pattern.

BYD M6 Auto Identification

Downloaded from www.Manualslib.com manuals search engine

Chapter 1 Instruments & Control System

1.1 Keys & Doors

Keys 1-2
Wireless Remote Control 1-4
Keyless Entry & Start System 1-11
Anti-theft System 1-15
Front Doors 1-17
Power Window 1-21
Rear Door 1-22
Engine Hood 1-23
Oil filler cap 1-24
Sunroof 1-25

Downloaded from www.Manualslib.com manuals search engine

Keys

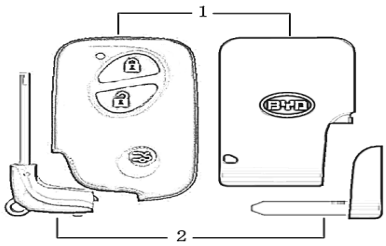

This vehicle can be operated by both smart key and mechanical key.

1. Smart keys – all side doors can be locked / unlocked by the smart keys, which include electronic smart key and card key. The electronic smart key can be used to lock / unlock the vehicle doors, find the vehicle and activate alarms through remote operation.
2. Mechanical key – the driver's door and trunk door can be locked / unlocked by the mechanical key.

If a waiter parks your vehicle for you, you shall take the mechanical key with you and leave the smart key with the waiter.

CAUTION

- Anyone who has a pacemaker or defibrillator implanted in the body shall be kept away from the antenna of the keyless entry & start system, as the electro-magnetic emission may interfere with the operation of such devices. For the information on the antenna location, see "Antenna Location" in this chapter.
- Anyone who is using other electronic medical devices shall consult their manufacturers about using such devices under electromagnetic interference. Electromagnetic emission may cause unexpected consequence to the operation of medical electronic devices.

Downloaded from www.Manualslib.com manuals search engine

NOTICE

Pay attention to the following when using a smart key:

- Do not attach any object which may block the transmission of electromagnetic wave, such as a metal cover, to the smart key.
- Do not knock the smart key heavily.
- Do not expose the smart key to high temperature for a long time, such as leaving it on the instrument panel in direct sunlight.
- Do not clean the smart key by water or an ultrasonic washer.
- Do not place the smart key beside any device which gives off electromagnetic wave, such as a cell phone.

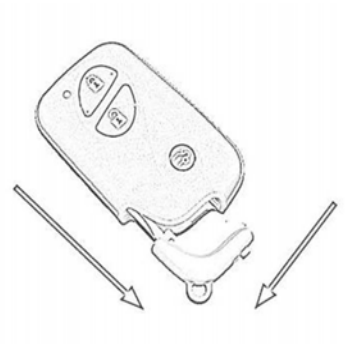

Using the Mechanical Key in the Electronic Smart Key

To take the mechanical key out of the electronic smart key, press the release switch and then pull out the mechanical key, as shown in the figure above. Put the mechanical key back in place reliably after using it.

Using the Mechanical Key in the Card Key

To take the mechanical key out of the card key, just pull it out in the arrow direction as shown in the figure above. Put the mechanical key back in place reliably after using it.

Downloaded from www.Manualslib.com manuals search engine

Key Number Plate

The key number plate that indicates the key number shall be kept in a safe place other than in the vehicle.

Additional keys can be produced in a BYD-authorized store using the key number.

You are strongly recommended to take note of the key number and keep it in a safe place.

Wireless Remote Control

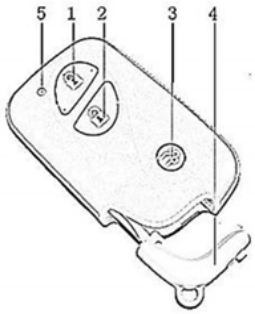

1. Lock switch
2. Unlock switch
3. Switch
4. Mechanical key
5. Indicator

Wireless remote control system is designed to lock/unlock the door and perform auxiliary functions from a distance within approximately 1m of the vehicle. It is only effective for the electronic smart key.

To operate any switch, press it down slowly and firmly, with the indicator flashing once.

Electronic smart key is a complicated electronic assembly. Follow the instructions below to prevent damage:

- Keep it away from any place with a high temperature, such as on the instrument panel.
- Don't disassemble it.
- Don't knock the key heavily or drop it on the ground.
- Don't get it wet.

You can register backup keys for your vehicle. Contact a BYD authorized service store for details.

Downloaded from www.Manualslib.com manuals search engine

Check the following if the electronic smart key cannot operate the doors, cannot operate normally within the specified working distance or if the key indicator isn't working normally:

- Check whether there is any radio transmitter nearby which may interfere with the normal operation of electronic smart key.
- Check whether the battery is depleted. Check the battery in the electronic smart key. To replace the battery, please refer to section "Replace Battery in Electronic Smart Key".

In case that you lose the electronic smart key, contact a BYD service station immediately to prevent your vehicle from being stolen or other accidents. (Refer to "When Key is Lost" in Chapter 4.)

Doors Locking/Unlocking

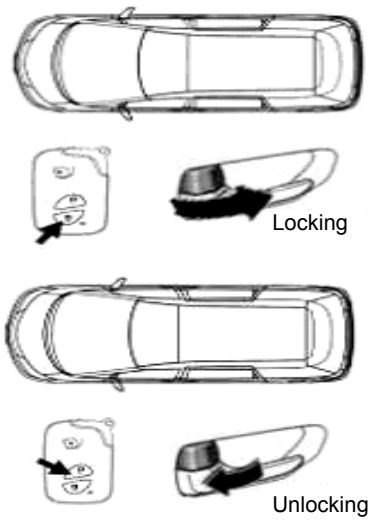

To lock/unlock all doors, press the switch on the smart key slowly and firmly.

Locking: press the lock switch, all doors will be locked. At this time, the exterior rearview mirror is folded and the turn signal lights flash once.

Check whether all doors are locked reliably.

The lock switch cannot function if any door is open. At this time, door locks will be unlocked first and then relocked, but the exterior rearview mirror won't be folded and turn signal lights don't flash, with the alarm sounding once.

Unlocking: press the unlock switch, all doors will be unlocked. At this time, the turn signal lights flash for 2 times if the anti-theft function isn't activated and flash for 3 times if the anti-theft function is activated.

Downloaded from www.Manualslib.com manuals search engine

If the power supply is at ACC or ON, the unlock switch cannot unlock the doors.

When unlocking all doors with the electronic smart key, even if the doors aren't open, the lights inside will remain on for 15 seconds and then go out.

Please open one door within 30 seconds of unlocking the doors with the electronic smart key. Otherwise, all doors will be locked again.

If you keep pressing the lock/unlock switch, the doors won't be locked/unlocked repeatedly. Please release the switch first and then press it again.

Rear Door Switch

Long press for 1.5 seconds to unlock the rear door.

Find-your-car Function

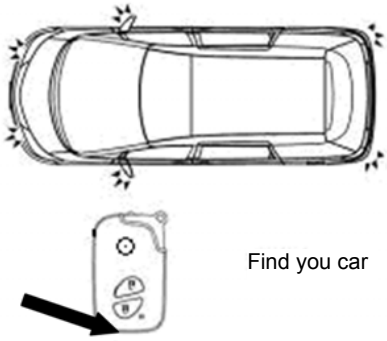

Find you car

Locate you car

When the vehicle is in anti-theft function, press the lock switch for 1.5 seconds, the horn will give a long alarm with the turn signal lights flashing for 15 seconds.

When you forget where the vehicle is parked, you can locate your vehicle with this function.

In find-your-car status, you can repeat the process to find your vehicle by pressing the lock switch for 1.5 seconds again.

Replace Battery in Card Key

You can replace the battery in the electronic smart key by your self with easy steps. Only replace it with CR2025 battery or equivalents.

CAUTION

- Keep the replaced battery or components away from children to prevent accidental swallowing.

NOTICE

- The battery shall be replaced with those recommended by a BYD service station.
- The used battery shall be disposed according to applicable local laws.

Downloaded from www.Manualslib.com manuals search engine

Replace the battery in the card key by the following steps

1. Press the arrow side and then pull out the mechanical key.

2. Take out the battery.

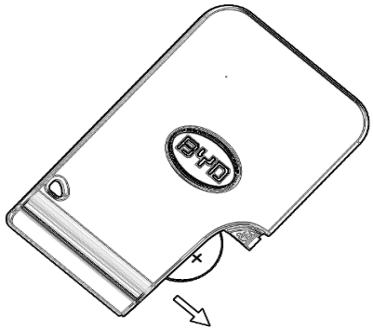

3. Insert a new battery and then the mechanical key into the card key.

NOTICE

- Make sure the battery is installed in correct orientation.
- Do not replace the battery with wet hands. Water will lead to rust in the card key.
- Prevent water from entering the card key as it is not waterproof.

Upon completion of replacement, check whether the card key can function normally; if it isn't functioning well, contact your BYD service station.

Downloaded from www.Manualslib.com manuals search engine

Using Card Key

⚠ CAUTION

- Don't change the transmitting frequency or increase the transmit power (such as adding a power amplifier); don't add an external antenna or replace the transmitting antenna with other models.
- In case that the card key causes interference with any legal wireless communication service, stop using it immediately and take measures to eliminate the interference before using it again.
- Micropower wireless device shall be able to withstand the interference caused by wireless communication services and the devices used for industrial, scientific or medical purpose.
- Do not use the card key near an airplane or airport.

Replace Battery in Electronic Smart Key

The electronic smart key could be easily damaged during replacing the battery. You are recommended to have the battery replaced in a BYD service station. If you insist on replacing it by yourself, only use CR1632 lithium battery or equivalents for replacement under the assist of a flat head screwdriver.

⚠ CAUTION

- Keep the replaced battery or components away from children to prevent accidental swallowing.

NOTICE

- Do not touch the circuit to prevent damage to the electronic smart key caused by static electricity.
- Do not leave out any component during the process of displacing the battery.
- The battery shall be replaced with those recommended by a BYD service station.
- The used battery shall be disposed according to applicable local laws.
- Don't modify the battery cover, or it may cause fault.

Downloaded from www.Manualslib.com manuals search engine

Replace the battery in the electronic smart key by the following steps

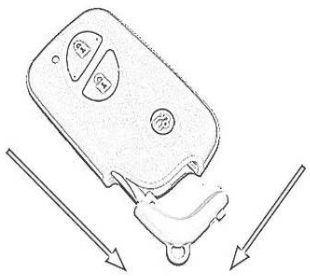

1. Press the release switch downwards and then remove the mechanical key.

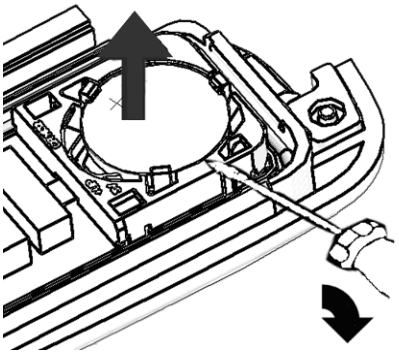

2. Open the cover of the electronic smart key with a flat head screwdriver or similar tool.
3. Remove the depleted battery with the flat head screwdriver or similar tool. Insert the tool into the guide slot and pry off the battery as shown in the figure above.

NOTICE

Don't modify the battery cover, or it may cause fault.

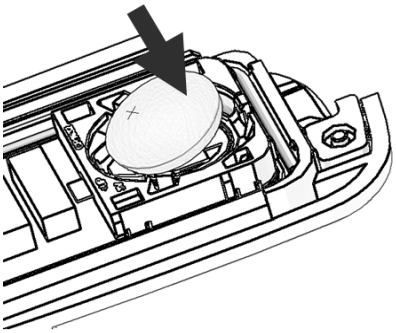

4. Install a new battery in place with the anode side (+) facing upward. Insert the mechanical key back into the electronic smart key. Firmly install the cover of the electronic smart key.

Downloaded from www.Manualslib.com manuals search engine

NOTICE

- Make sure the battery is installed in correct orientation.
- Do not replace the battery with wet hands. Water will lead to rust in the key.
- Do not touch or move any component in the electronic smart key, or it may cause fault.
- Pay attention to not bending the terminals when installing the battery. The battery compartment shall be free of dust or oil taint.
- Firmly install the cover of the electronic smart key.

Upon completion of replacement, check whether the electronic smart key can function normally; if it isn't functioning well, contact your BYD service station.

Using Electronic Smart Key

NOTICE

- Don't change the transmitting frequency or increase the transmit power (such as adding a power amplifier); don't add an external antenna or replace the transmitting antenna with other models.
- In case that the electronic key causes interference with any legal wireless communication service, stop using it immediately and take measures to eliminate the interference before using it again.
- Micropower wireless device shall be able to withstand the interference caused by radio services and the devices used for industrial, scientific or medical purpose.
- Do not use the electronic smart key near an airplane or airport.

⚠ CAUTION

- Anyone who has a pacemaker or defibrillator implanted in the body shall be kept away from the antenna of the keyless entry & start system, as the electromagnetic emission may interfere with the operation of such devices. For the information on the antenna location, see "Antenna Location" in this chapter.
- Anyone who is using other electronic medical devices shall consult their manufacturers about using such devices under electromagnetic interference. Electromagnetic emission may cause unexpected consequence to the operation of medical electronic devices.

Downloaded from www.Manualslib.com manuals search engine

Keyless Entry & Start System

Keyless entry & start system provides the following functions:

- Wireless remote control (see "Wireless Remote Control" in this chapter for details)
- Push button starting (see "Start Engine" in this chapter for details)
- Entry and starting (see "Entry and Starting" in this chapter for details)
- Steering lock (see "Steering Lock" in this chapter for details)

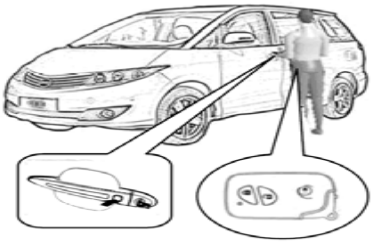

Entry Function

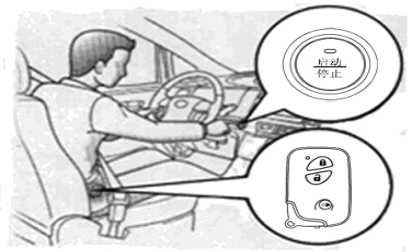

Starting Function

Entry and Starting

The smart keys allow the driver to unlock/lock side doors and start the vehicle.

Entry – unlock/lock side doors of the vehicle. See "Front Doors" in this chapter for details.

Start – the driver can switch between power modes and start the engine with the smart keys in the vehicle. See "Engine Starting" in this chapter for details.

Steering Lock

When the doors are locked through wireless remote control, microswitch or mechanical key, the steering wheel will be locked.

Downloaded from www.Manualslib.com manuals search engine

The steering wheel will be unlocked when pressing the Start button. If the green indicator on the Start button is flashing, it means the steering lock cannot be released. To release it, press down the Start button and shake the steering wheel slightly at the same time. If the orange indicator is flashing, it means the steering lock has fault and please contact BYD service station for help. See "Start Engine" for details.

Please take note that the steering lock can be activated only by the mechanical key when the battery in the smart key is depleted.

Antenna Location

1. Internal antenna
2. External antenna

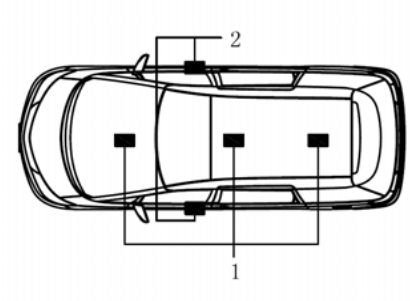

Active Region

The entry and start functions are available for a registered smart key in the active region

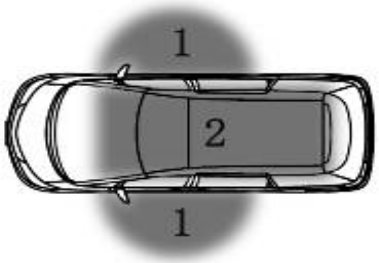

Downloaded from www.Manualslib.com manuals search engine

1. Active region for entry function – some 1m around the microswitch of the front door outer handle. Don't operate the smart key at a position too close to the door handle, window or center of the rear bumper, or the entry function could be not working.
2. Active region for start function – in carriage.

Do not operate the smart key at a blocked position, such as on the floor or instrument panel or in the trunk or glove box, or the start function could be not working.

In the following cases, the keyless entry and start function may not work normally:

- When there are facilities nearby that give out strong electromagnetic wave, such as broadcast tower, power plant, radio station, etc.;
- When the smart key is close to a telecommunication device, such as a two-way radio device or cell phone;
- When the smart key is touched or covered by a metal object;
- When you operate the door handle quickly;
- When the smart key is close to the door handle;
- When somebody else operates wireless remote control on a car nearby;
- When the battery is depleted (to replace the battery, please see the relevant sections above);
- When the smart key is near a high voltage device or noise-generating device;
- When the smart key is close to the smart key of another vehicle or other devices which give out radio wave;
- The smart key may not work normally even in the active region due to its location and the vehicle shape.

If you cannot enter the vehicle because the keyless entry and start system isn't working normally, you can use the mechanical key or wireless remote control function to unlock/lock all doors.

When the smart key is close to that of another vehicle, it may take a longer time to unlock the doors, which is normal.

Downloaded from www.Manualslib.com manuals search engine

If Smart Key Battery Depleted

The battery of the electronic smart key may have depleted if its indicator doesn't flash, or if the keyless start function doesn't work. Replace the battery following the instructions in "Replace Battery in Electronic Smart Key" in this chapter.

In this case, you can start the engine with the card key.

If the card key is not available or if its battery also has depleted, you can start the engine in the following steps:

1. Step down the brake pedal or press down the Start button, the indicator for the keyless entry and start system turns on with the buzzer beeping once.
2. Put the electronic smart key near the Start button within 30 seconds after the buzzer beeps, the buzzer beeps once again, indicating that you can start the engine.
3. Start the engine within 5 seconds after the buzzer beeps for the second time.

You can also start the engine by conducting the procedure above with a card key.

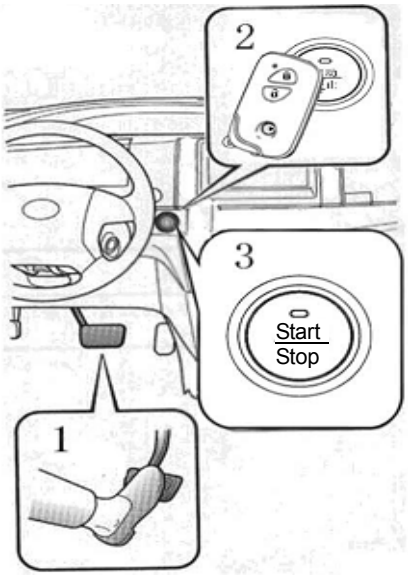

If you cannot get into the vehicle or start the engine with the card key, the battery may have depleted. Please replace the battery following the instructions in "Replace Battery in Card Key" in this chapter.

Downloaded from www.Manualslib.com manuals search engine

Save Battery Power

There is communication between the vehicle and smart keys even if you are not driving. Do not leave a smart key within 2m away from the vehicle.

If the vehicle is not used for a long time, the on-vehicle battery may deplete. To prevent the battery from over discharge, disconnect the negative terminal of the battery.

To activate the keyless entry and start system again, take any of the following actions:

a. Press the microswitch on the handle of the front outer door, if you have a smart key on hand;
b. Activate it through wireless remote control;
c. Insert the mechanical key into the lock hole of the driver's door and turn the key.

If a smart key is continuously exposed to intensive electromagnetic wave, its battery will deplete quickly. The smart key shall be kept at least 1m away from the following devices:

- TV sets
- PC
- Wireless charger
- Lamp holder
- Fluorescent lights

⚠ CAUTION

Unauthorized modification or alteration to this vehicle may cause failure of some devices.

In the event that the keyless entry and start system fails, contact a BYD service station. You shall take all smart keys with you.

Anti-theft System

The anti-theft system can protect the vehicle from being stolen. After activating the system, alarm sound will be given out if any door is opened.

Downloaded from www.Manualslib.com manuals search engine

Setting up System

1. Shut down the engine.
2. All passengers get off.
3. Lock up all doors.

When all doors are locked, the anti-theft indicator remains on. The anti-theft system is set up automatically after 10 seconds. The anti-theft indicator remains flashing after the system is set up.

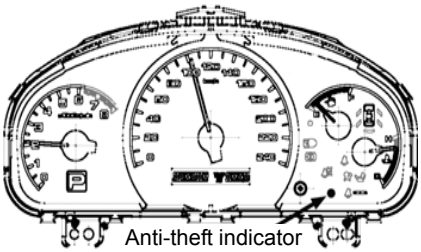

4. Make sure the indicator is flashing before leaving the vehicle.

If anyone in the vehicle attempts to unlock a door, the anti-theft system will be activated. So do not leave anybody in the vehicle.

Activate Anti-theft System

The system will give out alarm sound in the following cases:

- Any door is unlocked without using the keyless entry function.
- Front compartment cover is unlocked without using the keyless entry function.
- The power supply is turned on without using the keyless start function.

Deactivate Anti-theft System

Deactivate the anti-theft system by any of the following actions:

- Unlock the doors with remote control.
- Unlock the doors through the microswitch.
- Press down the Start button and the smart key is detected.

Downloaded from www.Manualslib.com manuals search engine

Front Doors

Unlock/Lock with Mechanical Key

Insert the mechanical key into the lock hole and turn it.

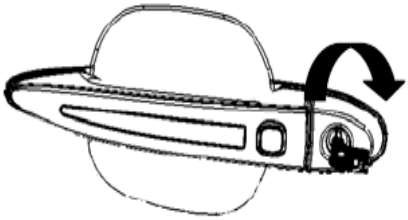

Unlock: turn the key clockwise

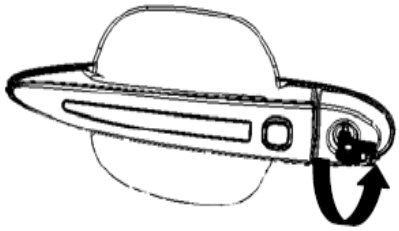

Lock up: turn the key anticlockwise

Unlock/Lock with Electronic Smart Key

When you enter the active region with a registered smart key, you can lock / unlock all doors without using the mechanical key. For information on the active region, refer to "Keyless Entry and Start System" in this chapter.

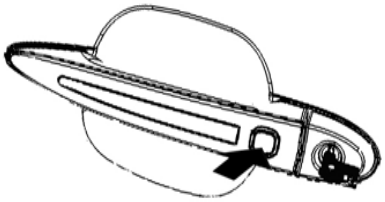

Lock Up

Press the Lockup button on the outer door handle slowly and firmly. All side doors and the rear door are locked at the same time, with the turn signal lights flashing once.

In the following cases the doors cannot be locked by pressing the Lockup switch.

- One of the doors is not closed. Press the Lockup button while opening/closing any door.
- The ignition switch is at ACC or ON.

Downloaded from www.Manualslib.com manuals search engine

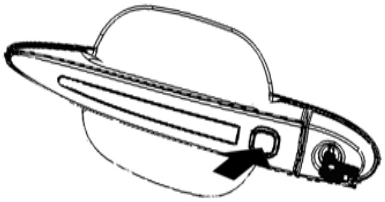

Unlock

When you enter the active region of the keyless entry function, the courtesy light on the exterior rearview mirror stays on for 15 seconds. When the courtesy light is on, press the microswitch on the door handle to unlock all side doors together with the rear door.

If the doors are not unlocked, press the microswitch again.

After the doors are unlocked, you shall open a door in 30 seconds. Otherwise all doors will be locked up automatically.

When unlocking the doors with the keyless entry and start function, check whether the door is unlocked before opening it.

If the doors are not unlocked, press the microswitch again.

Lock/unlock with inner lock knob

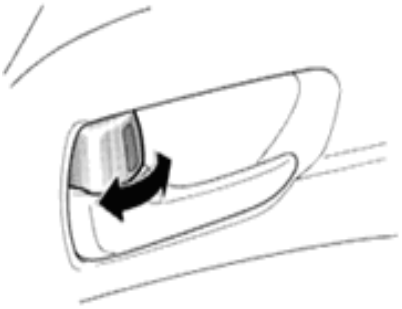

Lock knob operation

Lock up: push the knob forward.

Unlock: pull the knob backward.

The driver can unlock the door even if the inner lock knob is in lock-up position.

When the lock knob of the driver's door is pressed down, all doors are locked. At this time, if you pull up the lock knob of the driver's door, only the driver's door is unlocked.

The lock knob on any other door can only lock/unlock its own door.

⚠ CAUTION

NEVER pull the inner door handle at the driver side! Otherwise the opened door may cause a severe accident and even endanger the occupants' lives.

Downloaded from www.Manualslib.com manuals search engine

NOTICE

- The front door lock can prevent unintended lock operation: when the inner lock knob is set to lock-up position, if you close the front door, the lock-up status will be released while the door isn't locked.
- To lock up the front door from outside, please take all keys with you and close all doors, and then lock up the front door with the mechanical key or microswitch.

Auto lock

When the vehicle speed is over 20 km/h, the lock knob of all 4 side doors will lock up automatically. And side doors will be unlocked automatically when turning off the engine.

Lock/Unlock with Power Door Lock Switch

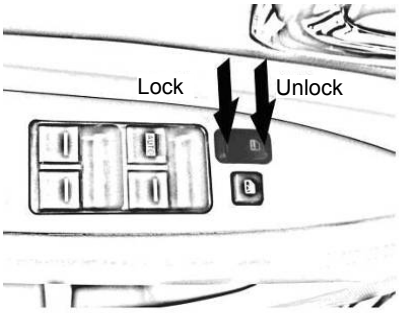

Both front doors are equipped with a power door lock switch. These two switches can lock/unlock all side doors.

Lock – press down the front end of the switch

Unlock – press down the rear end of the switch

Sliding door

Lock/unlock with inner lock knob

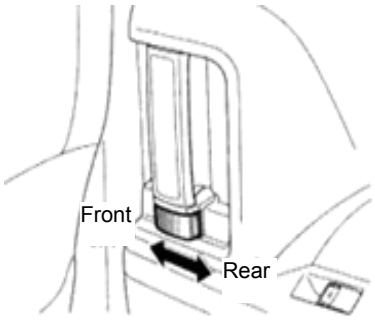

Lock up: slide the lock handle forward.

Unlock: slide the lock handle backward.

When the lock handle is at lock-up position, you can close the sliding door to lock it up.

Do not leave your keys in the vehicle.

Downloaded from www.Manualslib.com manuals search engine

Open/Close with Door Handle

Open: pull the door handle outwards to unlock it and then slide it backward. Fully open the sliding door and it will be locked up by the positioning lock at the bottom.

Close: pull the door handle to unlock the positioning lock, and then slide the door frontward to close it.

Check whether the sliding door is locked firmly.

NOTICE

- When the vehicle is parked on a slope with the front end at lower side, the sliding door must be fully opened until the positioning lock is engaged. Never pull the inner or outer door handle to prevent the door from unexpected sliding, which may cause personal injury.
- The left sliding door is half open when the fuel filler cap is opened. Do not operate it until the filler cap is closed.

⚠ CAUTION

Make sure the sliding doors are closed and locked firmly before starting the engine, especial when the there are children onboard. Properly engaged seat belt and locked doors can protect the passengers in an accident. In addition, door lock can prevent the door from unexpected opening.

Child Protection Lock on Sliding Door

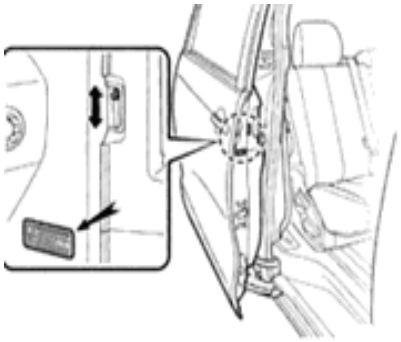

Downloaded from www.Manualslib.com manuals search engine

Set the lock rod to LOCK position, as shown in the figure above.

When the child protection lock is locked up, the sliding door cannot be opened by the inner door handle. It is recommended to use the child protection door when there is a child onboard.

⚠ CAUTION

Make sure the sliding doors are closed and locked firmly before starting the engine, especial when the there are children onboard. Properly engaged seat belt and locked doors can protect the passengers in an accident. In addition, door lock can prevent the door from unexpected opening.

Power Window

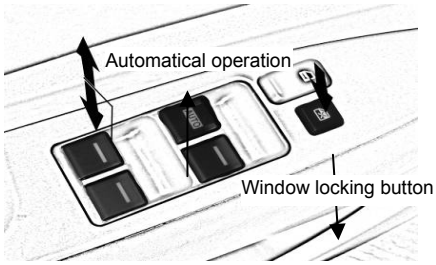

Driver's door

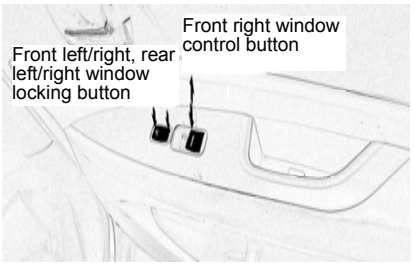

Front passenger door

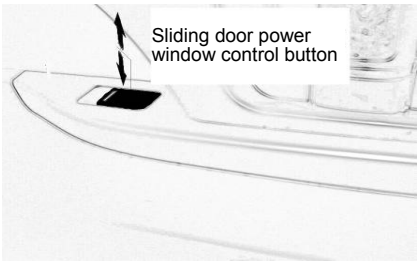

Sliding door

Use the switch on each side door to operate the power window.

Ignition switch shall be at ON when operating the power window.

There are 4 buttons on the driver's window to control all 4 power windows separately.

Drop down – press down the switch.

Lift up – lift up the switch.

You can release the switch anywhere during regulating the power window to stop it.

Downloaded from www.Manualslib.com manuals search engine

Automatic operation of driver's window – fully pull up/press down the AUTO switch on the driver's window and then release it. The driver's window will be opened/closed completely. To stop the window regulating anywhere, operate the AUTO switch to the opposite direction and then release.

If the window lock switch on the driver's door is pressed down, the passenger windows cannot be operated.

Operation after Engine Turning-off

The power windows support delayed control. After turning off the engine, you can still operate the power windows for up to 1 minute. The delayed control function can be disabled immediately by opening any front door. At this time, you must turn the ignition switch to ON (II) to operate the windows.

CAUTION

- The power windows cannot stop automatically if any part of your body is out of the window, so pay close attention to safety when using it.
- Make sure the hands of all passengers are not in the way of the power windows before closing them.
- When there is a child onboard, the window lockup switch shall be activated to prevent the child from regulating the power window accidentally.

Rear Door

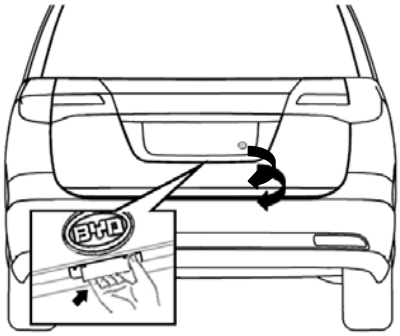

To open the rear door, first unlock it with the mechanical key or lockout device, and then pull the rear door handle upward.

Downloaded from www.Manualslib.com manuals search engine

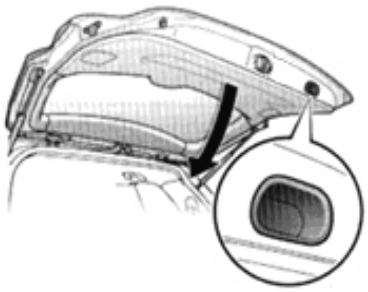

To close the rear door, pull it down and then firmly press it. Make sure to pull it upwards to check whether it is locked firmly.

It is harder to open/close the rear door on a slope. Please open/close the rear door on the level ground.

NOTICE

Do not exert pressure, apply paint or attach any foreign matter on the shocker absorber of the rear door.

Engine Hood

Open Engine Hood

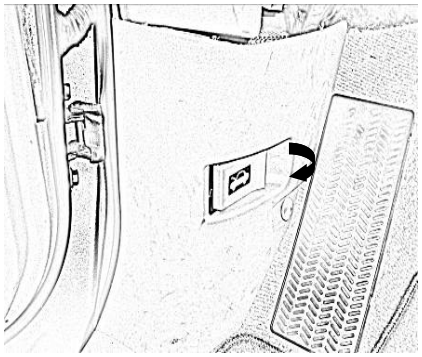

1. Pull the engine hood release handle and the hood will pop up slightly.

⚠ CAUTION

Make sure the engine hood is closed and locked up firmly before driving; otherwise the unexpected hood opening may cause an accident.

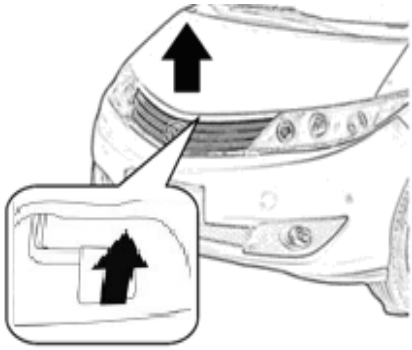

2. Pull up the secondary latch and lift up the engine hood at the front end of the vehicle.
3. Insert the support rod into the slot to support the opened engine hood.

Insert the support rod into the slot to keep the hood in the open position. Prevent the support rod from tilting to left or right; otherwise the hood may drop accidentally.

Downloaded from www.Manualslib.com manuals search engine

⚠ CAUTION

Insert the support rod into the slot and firmly support the hood to prevent it from dropping, which cause personal injury.

Close Engine Hood

Make sure no service tool or fabric is left in the engine compartment before closing the hood. Fold the support rod to the latch to prevent giving out clicking sound. Lower the hood and make sure it is locked up. If necessary, slightly press the hood at the front end to engage the latch.

NOTICE

Make sure the support rod is folded completely before closing the hood. Unfolded part of the support rod may cause deformation of the engine hood.

Oil filler cap

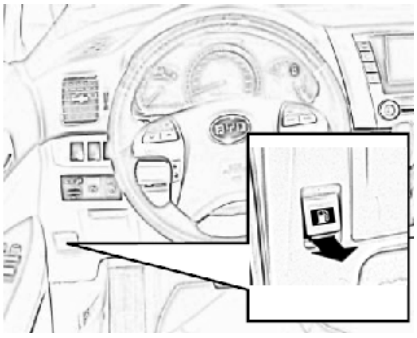

Open fuel filler cap

Pull up the release handle of the fuel filler cap and the cap bounces outward.

Shut off the engine when refilling fuel.

NOTICE

When the left sliding door is opened completely, do not open the fuel filler cap. Otherwise it could be damaged.

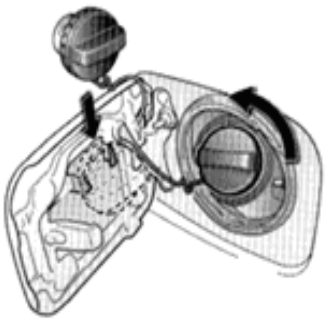

To remove the fuel tank cap, slowly rotate it anti-clockwise, wait for a moment and then remove it. Hang the cap on the support after removing it.

NOTICE

To prevent damage to the cap, do not exert any force except in the rotational direction to it. Do not pull or pry the cap.

Downloaded from www.Manualslib.com manuals search engine

Sunroof

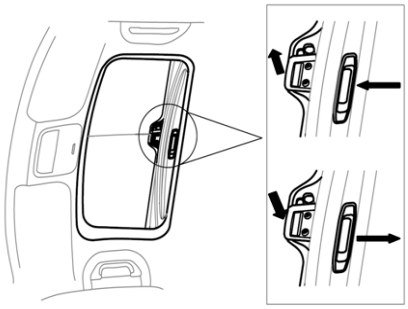

Operate front sunroof

Operate sun visor

You can open/close the sun visor manually.

Titling operation

Tilting upward: press the lock release button, and push the sunroof upwards until it is locked in place.

Tilting downward: pull down the handle until the sunroof is locked in place.

NOTICE

In rainy or snowy days, dry the sunroof with a towel before operating it; otherwise the water may get inside

CAUTION

- Operate the sunroof following the instructions below to prevent the risk of personal injury and even death:
- In driving, keep all body parts away from the sunroof. Otherwise it may cause personal injury and even death in a hard braking or accident.
- Make sure nobody is near the sunroof before closing it. Keep all body parts away from the open sunroof. Getting the body parts, such as the head, neck or hand, trapped in the sunroof is dangerous. Make sure the safety conditions before closing the sunroof.
- Never leave an infant in the vehicle alone, otherwise it may lead to severe accident.

Downloaded from www.Manualslib.com manuals search engine

Downloaded from www.Manualslib.com manuals search engine

Chapter 1 Instruments & Control System

1.2 Safety Devices

Seat 1-28
Front Seats 1-29
Adjust Middle Row Seats 1-32
Adjust Rear Row Seats 1-34
Headrest 1-35
Armrest 1-36
Seat Heater (if equipped) 1-37
Seat Belts 1-37
SRS Airbag Overview 1-44
Driver's Airbag and Front Passenger Airbag 1-46
Curtain Airbag (if equipped) 1-48
Service Side Airbags 1-49
Airbag Warning Indicator 1-49
Front Passenger Seat Belt Warning Indicator (if equipped) 1-51
When Do Airbags Deploy 1-51
When Airbags Won't Deploy 1-52
Deactivate Airbags 1-54
Supplemental Information 1-56
Airbag Maintenance 1-56
Supplemental Safety Information 1-57

Downloaded from www.Manualslib.com manuals search engine

Seat

Before driving, all seat backs shall be adjusted to the vertical position. All occupants shall wear seat belts properly while leaning against the seat back.

CAUTION

- Do not move until all occupants are seated properly. Do not sit on a folded seatback or stay in the trunk. In a hard braking or crash accident, a passenger who is not properly restrained could be severely injured or even die.
- When the vehicle is moving, no passenger can stand up or walk around; Otherwise he could be severely injured or even die in a hard braking or crash accident.

Notices on Seat Adjustment

CAUTION

- Do not adjust the seat when the vehicle is moving, as the sudden move of the seat may cause the loss of control of the vehicle.
- In seat adjustment, take care to avoid collision between the seat and luggage or a passenger.
- After seat adjustment, release the adjustment lever and shake the seat to make sure it is locked up firmly.
- After seat adjustment, lean against the seat back to make sure it is locked up at a proper position.
- Do not place anything under the seat; Otherwise it may unlock the latch mechanism or push up the adjustment lever accidentally, causing sudden move of the seat and loss of control of the vehicle.
- In seat adjustment, keep your hand away from moving parts or seat bottom; Otherwise your hand could be injured.

Notice on SRS Side Airbag (if equipped)

CAUTION

SRS side airbags are installed on the back of the front and middle seats. Follow the instructions below:

- Do not lean against the door to keep away from the space required for airbag deployment. A passenger who is exposed to the airbag deployment force could be severely injured or even die.
- Do not put anything on or around a side airbag cover. Otherwise the airbag may not deploy properly in an accident, which means increased rate of personal injury or even death.
- Do not modify or replace any part of a seat equipped with a side airbag. Modification to the seat may neutralize the airbag, impede airbag deployment or cause unexpected airbag deployment, all of which can cause severe personal injury or death.

Downloaded from www.Manualslib.com manuals search engine

Front Seats

Safety Cautions on Front Seats

Driver's seat

CAUTION

SRS airbag is deployed with great force, which could be exerted to the driver causing severe injury or even death if he is not kept at a safe distance away from the airbag.

The danger area of the driver's airbag is 50-75 mm from the deployed airbag. The driver is recommended to keep his chest at 250 mm away from the airbag. The safe distance is from the center of the steering wheel to the driver's breast bone. If you cannot get 250 mm safe distance, adjust the driver's seat by the following means:

- Move the seat backward while ensuring that your feet can touch the pedals comfortably.
- Adjust the seat back backwards. For most vehicle, even if the driver's seat is adjusted to the front extreme position, you can get 250 mm safe distance by adjusting the seat back tilting angle. If you cannot see the road conditions ahead clearly in a tilting seat, use a hard cushion or lift up the seat (if seat lifting function is available) to get a better view.

After seat adjustment, make sure the floor pedals, steering wheel can be operated easily and the instrument panel provide a good view for the driver.

Front passenger seat

CAUTION

SRS airbag is deployed with great force, which could be exerted to the front passenger causing severe injury or even death if he is not kept at a safe distance away from the airbag. Adjust the seat back to keep the front passenger as far away from the airbag as possible.

Downloaded from www.Manualslib.com manuals search engine

Adjust Driver's Power Seat

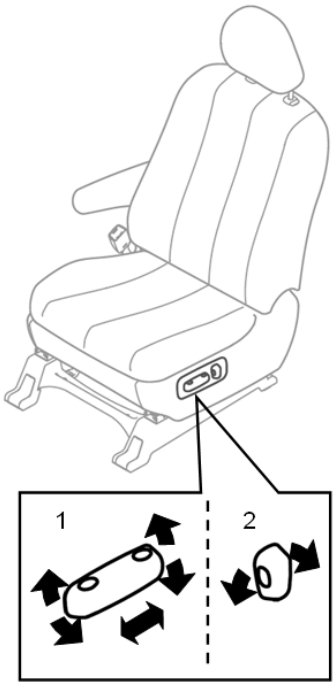

1. Regulating switch of seat height, position and cushion angle

Move the control switch in the desired direction.

Release the switch when you want the seat to stop.

Do not leave anything under the seat as it may cause trouble for seat adjustment.

2. Regulating switch of seat back angle

Move the control switch in the desired direction.

Release the switch when you want the seat to stop.

Do not leave anything under the seat as it may cause trouble for seat adjustment.

CAUTION

- Do not adjust the seat when the vehicle is moving.
- In seat adjustment, take care to avoid collision between the seat and luggage or a passenger.
- Do not adjust the seat back to an excessive tilting angle. In a front or rear collision, a properly fastened seat belt can provide maximum protection when the driver is leaning against a vertical seat back. If the seat back angle is too large, the lap belt may slide along the hip and pose pressure to the abdominal part, or the shoulder belt may slide to the neck. In head-on collision accidents, larger seat back angle could significantly increase the risk of personal injury.
- After seat adjustment, shake the seat and seat back to make sure the seat is locked up firmly. Headrest shall be installed in place.

Downloaded from www.Manualslib.com manuals search engine

Adjust Driver's Seat Manually

Seat adjustment shall be conducted before you drive.

After adjustment, shake the seat to make sure it is locked in place.

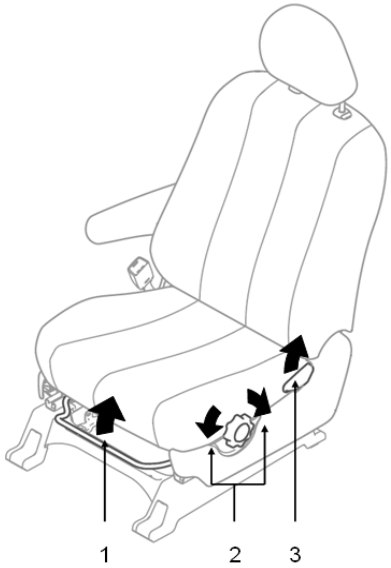

1. Seat position adjustment

Hold the seat unlock lever in the middle and pull it upwards. Slide the seat to your desired position and release the lever.

Shake the seat to make sure that it is locked in place.

2. Seat height adjustment

Rotate the regulating knob to lift or lower the seat.

3. Seat back adjustment

Pull up the seat back adjustment lever without leaning against the seat back. Adjust the seat back to the desired angle by leaning on it and then release the adjustment lever.

After adjustment, make sure the seat is locked in place.

Adjust front passenger seat

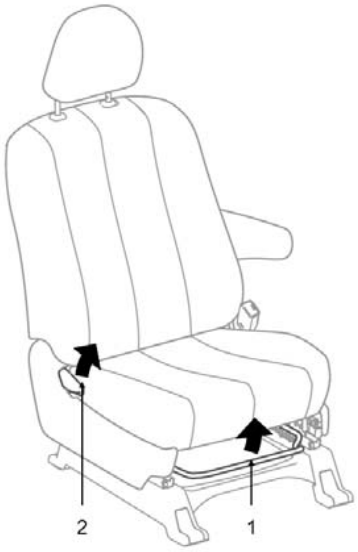

Downloaded from www.Manualslib.com manuals search engine

1. Seat position adjustment

Hold the seat unlock lever in the middle and pull it upwards. Slide the seat to your desired position and release the lever.

Shake the seat to make sure that it is locked in place.

2. Seat back adjustment

Pull up the seat back adjustment lever without leaning against the seat back. Adjust the seat back to the desired angle by leaning on it and then release the adjustment lever.

After adjustment, make sure the seat is locked in place.

CAUTION

- Do not adjust the seat when the vehicle is moving.
- In seat adjustment, take care to avoid collision between the seat and luggage or a passenger.
- Do not adjust the seat back to an excessive tilting angle. In a front or rear collision, a properly fastened seat belt can provide maximum protection when the front passenger is leaning against a vertical seat back. If the seat back angle is too large, the lap belt may slide along the hip and pose pressure to the abdominal part, or the shoulder belt may slide to the neck. In head-on collision accidents, larger seat back angle could significantly increase the risk of personal injury.

Adjust Middle Row Seats

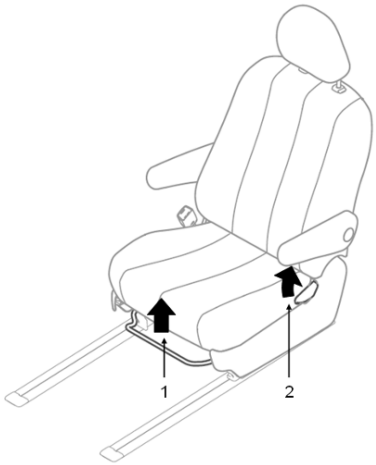

Downloaded from www.Manualslib.com manuals search engine

1. Seat position adjustment

Pull up the seat unlock lever. Slide the seat to your desired position and release the lever.

2. Seat back adjustment

Pull up the seat back adjustment lever without leaning against the seat back. Adjust the seat back to the desired angle by leaning on it and then release the adjustment lever.

As the seat back returns to vertical position with large force when unlocked, keep your body away from it to prevent personal injury.

After adjustment, make sure the seat is locked in place.

Move Middle Row Seats

You can move the middle row seats to make way for rear row passengers to enter their seats easily.

1. Unlock seat backs with the interlocking lever.

2. Push the seat back to the forefront position.

3. Move the seat to the forefront position.

After the rear row passengers enters their place, reset and lock the middle seat.

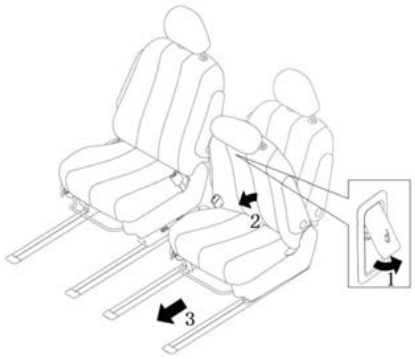

Downloaded from www.Manualslib.com manuals search engine

Adjust Rear Row Seats

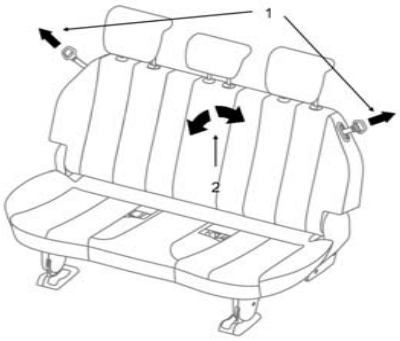

1. Unlock seat back

Pull the unlock tape on either side of the seats to unlock the seat backs.

2. Lock seat back

While pulling the unlock tape, adjust the seat back to your desired angle by leaning against it and then release the unlock tape.

Shake the seat back to make sure it is firmly locked in place.

Fold / Flip Rear Row Seats

Folding

1. Unlock seat back

Pull the unlock tape on either side of the rear row seats to unlock the seat backs.

2. Fold seat back

While pulling the unlock tape, fold the seat back forward and then release the tape.

Flipping

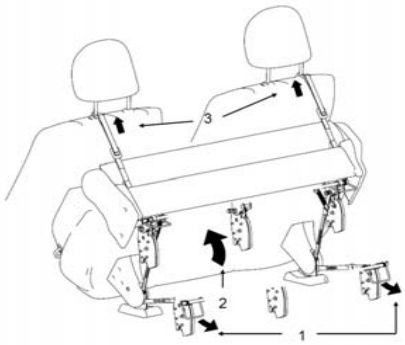

1. Unlock floor locks

Operate the lever to unlock the rear row seats from the floor locks.

2. Flip the seats forward

Push forward the seats to flip them as a whole.

Downloaded from www.Manualslib.com manuals search engine

3. Fasten flipped seats

Hook the clips of the fastener tape for the flipped rear seats to the headrest poles of the middle row seats, and then tighten the fastener tape to prevent the rear seats from falling off when the vehicle is moving.

You can flip the rear seats to expand trunk capacity. See "Notices on Luggage Placement" in chapter 3 for precautionary information on luggage placement.

Headrest

Front and Middle Row Seats

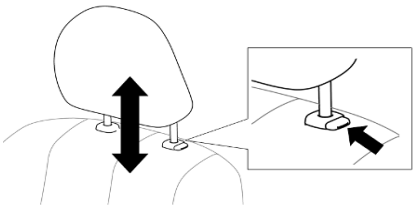

Rear Row Seats

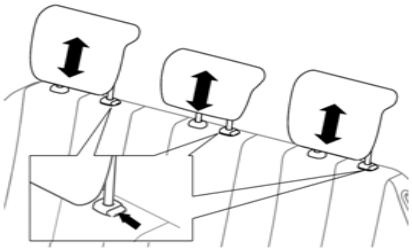

For the sake of safety and comfort, the headrests shall be adjusted properly before driving the vehicle.

Move up: pull it upwards.

Move down: press the lock release button and press it downward at the same time.

The headrest can provide the maximum protection when the head is resting directly on it. It is not recommended to use additional cushion on the seat back.

⚠ CAUTION

- Adjust the headrest height until its center is at the same level with the top of your ears.
- After adjustment, make sure the headrest is locked in place.
- Do not drive a vehicle which is not equipped headrests.

Downloaded from www.Manualslib.com manuals search engine

Armrest

Front Seats

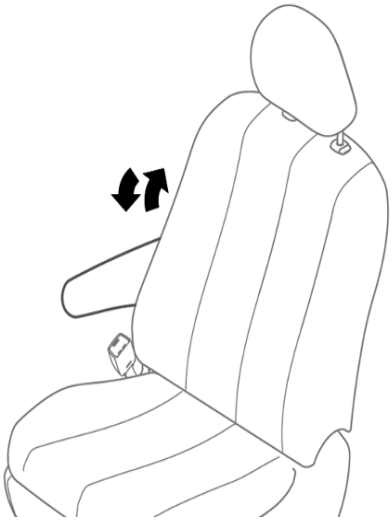

Middle Row Seats

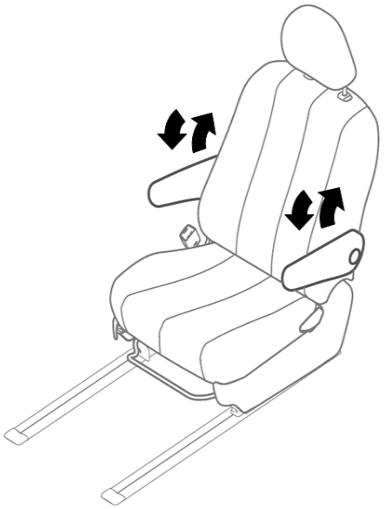

Front and Middle Row Seats

1. Rotate the armrest upward to use it.

2. Rotate the armrest downward when not in use.

NOTICE

- Do not place heavy objects on the armrest to prevent damage to it.

Downloaded from www.Manualslib.com manuals search engine

Seat Heater (if equipped)

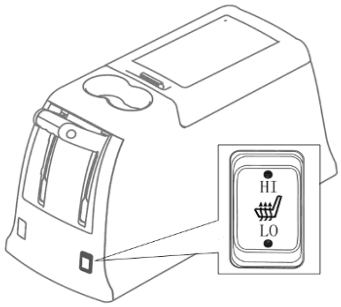

Press the seat heater switch to heat up the driver's seat which is equipped with a heater.

Press at the low HI position of the switch to heat up the seat quickly. When reaching your desired temperature, press the upper LO position of the switch to maintain the seat temperature.

To turn off the seat heater, just press the switch to its center position. The seat heater function is available only when the ignition switch is at ON.

⚠ CAUTION

Be highly careful when using the seat heater! It may severely burn the skin even in cold days. A driver who is in any of the following cases shall take extreme care:

- When you has skin allergies
- When you are very tired
- When you get sleepy after taking pills (soporific, cold cure, etc.)

Don't cover the seat with any heat insulation article, such as a blanket or cushion, when using the heater, otherwise the seat may be overheated.

Seat Belts

Notice on Seat Belts

BYD strongly requires all occupants in the vehicle to properly wear the seat belt when the vehicle is moving. Failure to adjust the seat belt properly could increase the risk and/or severity of injury in a collision.

The seat belt design with sufficient length enables appropriate use for most adults.

Child: The seat belt is designed for adults. A child who is under the age to wear a seat belt shall be protected by a child restraint device.

A child who is too tall for the child restraint device shall be seated on a rear seat with the seat belt fastened properly. Statistics on traffic accidents shows a child who is seated in rear seats and wears seat belts properly is exposed to less risk of injury than a child who is seated in a front seat.

Downloaded from www.Manualslib.com manuals search engine

The seat belt must be properly fastened under the condition that a child who has to take a front seat. Otherwise the child could be severely injured or even die as a result of the fast deployment of airbag in an accident.

Never allow a child to stand or kneel on the seat. A child who is not properly restrained in the seat could be severely injured or even die in a hard braking or crash accident. In addition, it is not safe to hold a child on your lap. Holding a child in your arms is also not safe.

Pregnant woman: A pregnant occupant shall wear the seat belt properly. Consult your doctor for precautions on using the seat belt. The lap belt shall be tightened lower than the hip of the pregnant woman rather than on the waist.

Wounded personnel: A wounded occupant shall wear the seat belt properly. First consult your doctor for precautions on using the seat belt considering the condition of the wound.

If there are applicable local laws on use of seat belts, please have the seat belt replaced or installed in a BYD service station.

CAUTION

When the vehicle is moving, all occupants shall sit in the seats and wear seal belts properly. Otherwise the occupants could be severely injured or even die in a hard braking or crash accident.

- Follow the instructions below on using seat belts:
- Each seat belt must be used by only one person at a time. Even a child must use a seat belt alone.
- Do not adjust the seat back to an excessive tilting angle. In a head-on or rear collision, a properly fastened seat belt can provide maximum protection when the occupant is leaning against a vertical seat back. If the seat back angle is too large, the lap belt may slide along the hip and pose pressure to the abdominal part, or the shoulder belt may slide to the neck. In head-on collision accidents, larger seat back angle could significantly increase the risk of personal injury.
- Do not damage the seat belts or attachments. Prevent the seat belts from being trapped or clamped in seats or doors.
- Check the seat belts regularly for crack, wear and loose connection. Make replacement if any part is damaged. Do not attempt to disassemble or

Downloaded from www.Manualslib.com manuals search engine

modify the seat belts.

- Keep seat belts clean and dry. If seat belts require cleaning, only use neutral soap and water. Never use bleaching agents, dyes or abrasives to clean the seat belts, since these materials could cause severely damage to seat belts.
- After a serious collision accident, the whole seat belt assembly, including bolts, should be replaced, even if the damage to the seat belts is not apparent.

Fasten Seat Belts

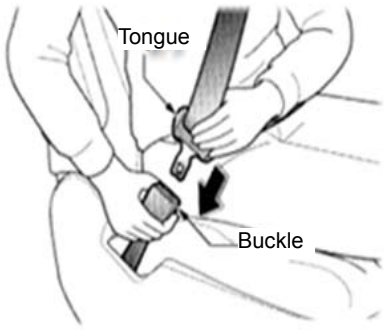

Adjust the seat to your desired position while you are sitting in the seat. To fasten the seat belt, pull out the seat belt from the retractor and insert the tongue into the buckle.

A click sound can be heard when the buckle is engaged. The seat belt length can be adjusted automatically according to your body size and seat position.

In the event of hard braking or collision, the retractor will lock the seat belt and prevent it from extending. If your body moves forward fast, the seat belt will also be locked. You can drag out the seat belt slowly to fit your body.

When loosening the seat belt, allow it to retract completely.

If you cannot pull out the seat belt from the retractor, pull it outwards forcibly and release it, and then try to pull it out slowly again.

Downloaded from www.Manualslib.com manuals search engine

⚠ CAUTION

- After inserting the tongue, make sure the buckle is locked firmly and the seat belt is not twisted.
- Do not leave small objects, such as a coin or paper clip, in the buckle, as they may prevent proper engagement of the tongue and buckle.
- If the seat belt cannot function normally, contact a BYD service station immediately. The affected seat cannot be occupied until the seat belt system is replaced or repaired. A faulty seat belt cannot protect the occupant reliably in the event of a collision.

Interference between seat belt and armrest

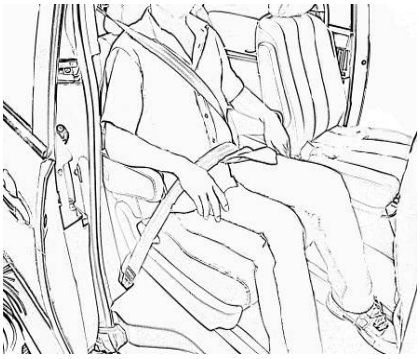

To fasten the seat belt when an outer armrest is used, arrange the shoulder belt above the armrest and the lap belt under the armrest.

⚠ CAUTION

- Always wear the seat belt properly, arranging the shoulder belt above the armrest and the lap belt under the armrest. Failure to arrange the seat belt properly could increase the risk of injury in a collision.

Downloaded from www.Manualslib.com manuals search engine

Arrange 3-point seat belt

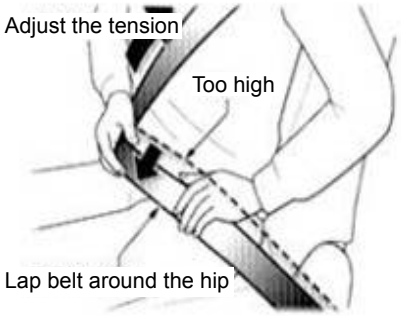

Arrange the lap belt around the hip rather than the waist, and then pull the shoulder belt upward to a proper position.

CAUTION

- Do not make the seat belt too loose or the lap belt too high. Under this condition the occupant body could slip out of the belt in an accident, resulting in severe injury or even death. Keep the lap belt around the lower hip area.
- Never wear the shoulder belt under the arm.

Adjustable shoulder belt buckle

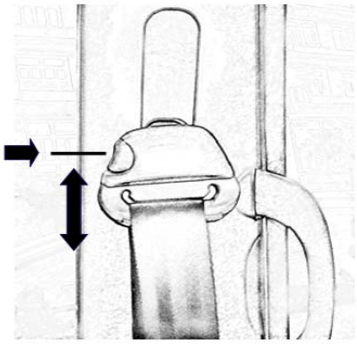

Adjust the shoulder belt buckle to proper position.

Lift up: slide the buckle upward.

Lower down: press the lock release button and slide the buckle downward.

After adjustment, make sure the buckle is locked at proper position.

Downloaded from www.Manualslib.com manuals search engine

⚠ CAUTION

Make sure the shoulder belt is properly located above the arm and away from the neck. If the shoulder belt is off your shoulder, on your upper arm or neck, there is a greater risk of severe injury in a collision.

To release the seat belt, press the buckle release button and let the belt retract.

If the seat belt doesn't retract, pull it out to check whether it is twisted. Make sure the seat belt retracts smoothly.

Seat belt for middle seat in rear row

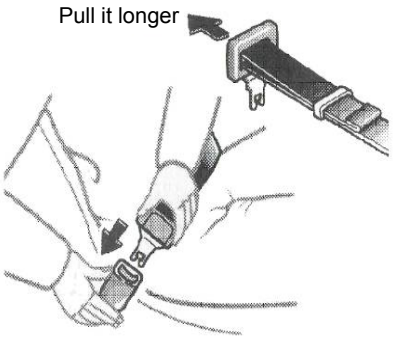

The middle seat in the rear row adopts 2-point seat belt.

Seat upright against the seat back, and insert the belt tongue into the buckle until a click sound is heard.

If the seat belt cannot extend freely, pull the belt tongue while keeping it perpendicular to the seat belt.

Downloaded from www.Manualslib.com manuals search engine

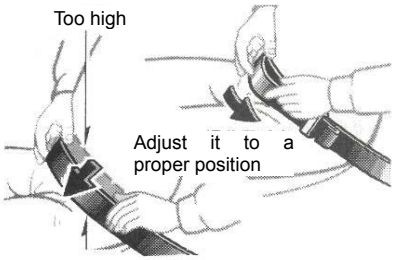

Adjust the seat belt to around the hip and retract the excessive length.

Pull the free end of the seat belt to retract it. Keep the lap belt around the lower hip area rather than on the waist.

⚠ CAUTION

Do not make the seat belt too loose or the lap belt too high. Under this condition the occupant body could slip out of the belt in an accident, resulting in severe injury or even death. Keep the lap belt around the lower hip area.

Downloaded from www.Manualslib.com manuals search engine

SRS Airbag Overview

As part of Supplemental Restraint System (SRS), airbag is designed to work with the seat belt to help protect the driver and passengers from upper body injuries in head-on collisions of a certain severity.

Airbags can provide maximum protection only when it works together with the whole passive protection system. All occupants should always properly wear their seat belts. For the safety of both you and your family members, pay close attention to **Caution** and **Notice** information in the section.

CAUTION

- All occupants should always properly wear seat belts in driving!
- Keep your body in an upright position to get maximum protection from the seat belt and airbag system.
- Rear seats are safer for children.
- Do not disassemble the airbag system by yourself.

Airbag Triggering Conditions

The airbag is designed to activate when a head-on collision reaches a certain severity; and it may also be triggered in some special collisions.

In case of minor head-on collision, or side collision, rear collision or roll-over accidents, the airbag won't be triggered. Under the above conditions, the seat belts can provide protection to the occupants.

The decisive factor for triggering airbag system is the deceleration curve detected by electronic control unit (ECU) during the collision. If the detected deceleration rate is lower than the reference value preset in ECU, the airbag won't be triggered even though the vehicle is severely damaged in the accident.

Downloaded from www.Manualslib.com manuals search engine

BYD has taken the common misuse of the vehicle and various road conditions into full consideration when conducting airbag presetting. However, as specific conditions of each collision are infinitely variable, please use your vehicle in good manner while strictly following instructions in this manual. Misuse of the vehicle may reduce the protection performance of the airbag system.

SRS Airbag Components

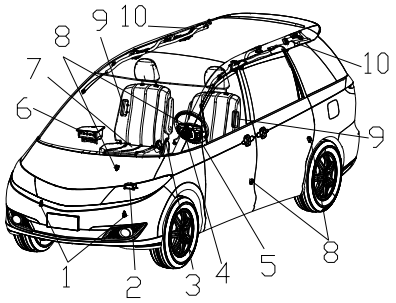

The major components and their locations of the M6 SRS airbag system are shown in the figure above.

1. Front crash sensor
2. Airbag electronic control unit (ECU)
3. SRS warning light
4. Clock spring
5. Driver's airbag module (front airbag inflator)
6. Front passenger airbag module (front airbag inflator)
7. Seat belt warning sensor
8. Side crash sensor (if equipped)
9. Front side airbag module (if equipped, side airbag inflator)
10. Curtain airbag module (if equipped, side airbag inflator)

Downloaded from www.Manualslib.com manuals search engine

Driver's Airbag and Front Passenger Airbag

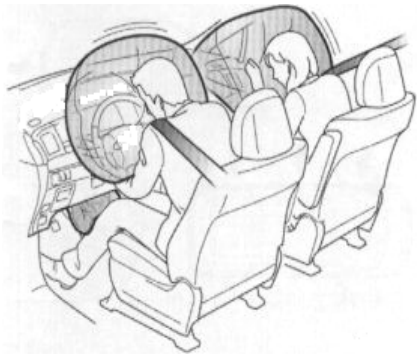

The frontal airbags, including the driver's airbag and front passenger airbag, are designed to inflate in moderate to severe frontal or near-frontal collisions, protecting the head and chest of the driver and front passenger from striking interior objects such as the steering wheel or a window.

How Frontal Airbags Work

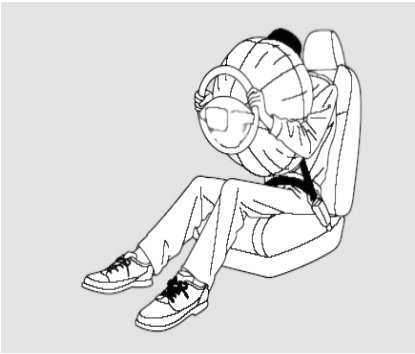

In the event of a head-on collision more severe than a certain threshold, the sensors detect that the vehicle is slowing down fast and send a signal to the controller to inflate the frontal airbags in a very short time.

Meanwhile the seat belt holds the body of the occupant in place. The inflated airbag forms an air cushion to protect your head and chest.

Both frontal airbags inflate at the same time since they use the same sensors. However, it is possible for only one airbag to inflate.

This can occur when the severity of a collision is at the threshold to inflate the airbag. In such case, the seat belt will provide sufficient protection, and the supplemental protection provided by the airbag would be minimal.

Downloaded from www.Manualslib.com manuals search engine

The frontal airbags deflate immediately after inflation, so they won't interfere with the driver's visibility or the ability to steer or control the vehicle.

The total process of airbag inflation and deflation is finished in approximately tens of milliseconds.

Airbag inflation makes loud noise, but normally it doesn't cause injury. Sometimes it could cause temporary ringing or hearing impairment in the ears, but you will recover soon. After airbag deployment, it is normal to notice smoke-like residue, which is actually powder from the airbag surface. Although the powder is not harmful, people with respiratory problems may experience temporary discomfort. If this occurs, get out of the vehicle as soon as it is safe to do so.

Service Frontal Airbags

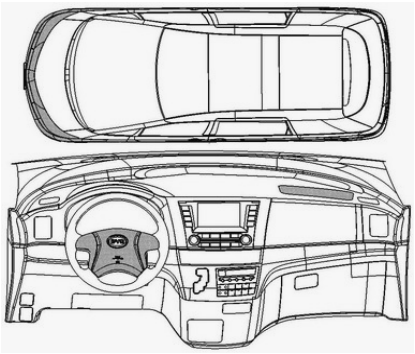

You must have your vehicle serviced in the following cases:

- SRS airbags inflated.
- The front end of the vehicle (shaded area in the figure above) experienced a head-on collision not severe enough to trigger the airbags.
- Steering wheel cover or front passenger airbag cover (shaded area in the figure above) has crack, deep scratch or other damage.

Downloaded from www.Manualslib.com manuals search engine

Front Seat Side Airbag (if equipped)

Side airbags, if equipped in the front seats, inflate in moderate to severe side collisions to protect the head and chest of the driver and front passenger from striking interior objects such as a window.

Curtain Airbag (if equipped)

Curtain airbags, if equipped, drop down from the roof along both sides of the cabin in moderate to severe side collisions to give better protection.

Downloaded from www.Manualslib.com manuals search engine

Service Side Airbags

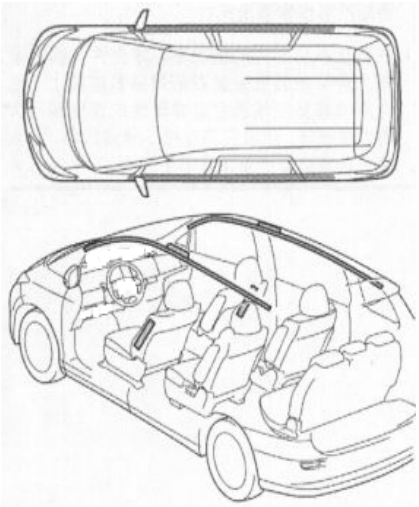

You must have your vehicle serviced in the following cases:

- SRS side airbags and curtain airbags inflated.
- The vehicle doors (shaded area in the figure above) experienced a side collision not severe enough to trigger the airbags.
- The seat surface where the side airbags are located (shaded area in the figure above) has crack, deep scratch or other damage.
- The trim of A-pillar, roof rail or C-pillar where the curtain airbags are located (shaded area in the figure above) has crack, deep scratch or other damage.

Airbag Warning Indicator

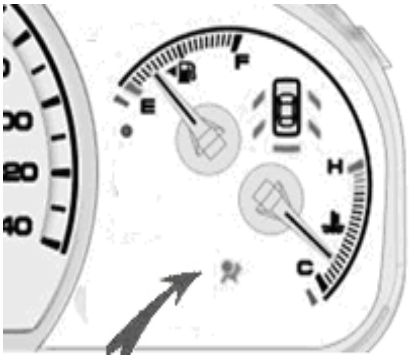

Under the control of an ECU which features self-diagnostic capability, the state of the SRS airbag system is indicated by a warning indicator on the instrument panel.

Downloaded from www.Manualslib.com manuals search engine

- After turning the Start button to ON, the SRS warning indicator stays on for 5 seconds and then goes off for over 5 seconds, reminding the SRS system is normal.
- If the SRS system has been deactivated by a BYD service station, the warning indicator still goes through the above procedure, but at this time the SRS system cannot provide protection.

This warning indicator can display the state of SRS ECU, crash sensors, inflator, warning indicator, wiring and power supply. (Refer to section "Service Indicators and Warning Buzzers" for details.)

NOTICE

The SRS system has fault if any of the following occurs:

- The warning indicator doesn't turn on when Start button is at ON.
- After turning Start button to ON, the warning indicator doesn't go off within 5 seconds, or goes off but turns on again.
- The warning indicator turns on when Start button is at OFF or ACC.
- The warning indicator stays on or is flashing when the vehicle is moving.

CAUTION

In case of any fault in the SRS system, you must have your vehicle serviced in a BYD service station. Unrepaired fault in the SRS system may result in failure of airbags in an accident.

Downloaded from www.Manualslib.com manuals search engine

Front Passenger Seat Belt Warning Indicator (if equipped)

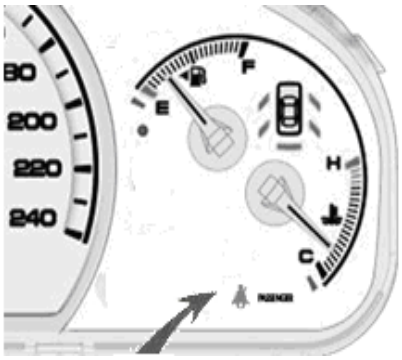

If your vehicle is equipped with seat belt warning sensors, there is a front passenger seat belt warning indicator on the combination switch, which is indicated by the black arrow in the figure above. If the front passenger seat is occupied without using the seat belt, this indicator turns to remind the front passenger to wear the seat belt. After the seat belt is fastened, the warning indicator goes off. When the front passenger seat is not occupied, the warning indicator remains off.

When Do Airbags Deploy

Hit protruding objects such as a safety island or curb stone

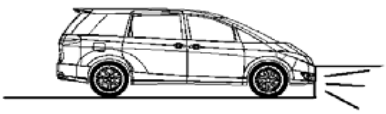

Hit deep groove

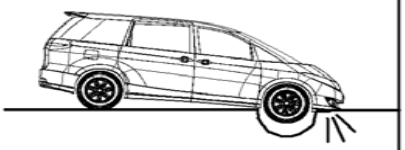

Downloaded from www.Manualslib.com manuals search engine

Hit ground on a downhill road

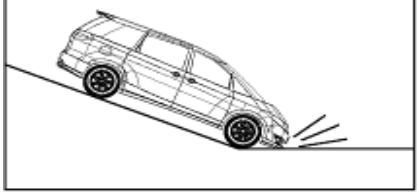

In the cases shown in the figures above, the frontal airbags may deploy.

- The frontal airbags may deploy due to the vehicle's undercarriage violently striking a low object.

When Airbags Won't Deploy

Hit tall and thin objects, such as a post or tree

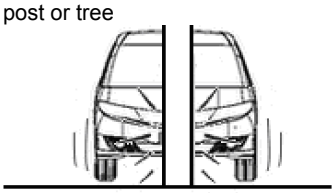

Hit a wall slantwise

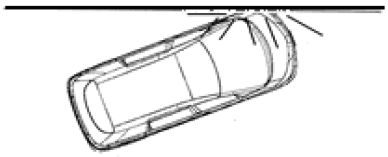

Get under a truck in a rear-end collision

Hit by another vehicle at the rear-end

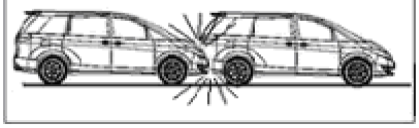

Downloaded from www.Manualslib.com manuals search engine

In a rollover accident

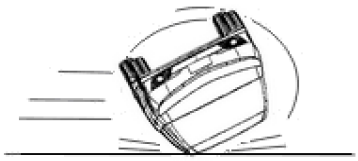

Hit by another vehicle on the side (without side airbag)

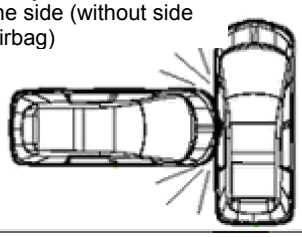

In the cases shown in the figures above, the frontal airbags may not deploy.

NOTICE

- Airbags are designed on the basis of specific vehicles, any modification to the suspension, tire size, bumpers, chassis and other original equipments may adversely affect the functioning of the airbag system. Never use airbag system components from another vehicle to prevent personal injury.
- When the vehicle is moving, always wear the seat belt properly, and sit upright with your back against the seat. An occupant who isn't wearing the seat belt, or is leaning forward or in other improper posture may be severely injured when the airbag deploys.
- The driver shall always keep a distance over 25 cm between his chest and the steering wheel, in order to prevent the airbag from causing personal injury to the driver while allowing it to provide the maximum protection. Specifically, each occupant shall adjust the front seats and headrests properly, and the driver's arms should be as straight as possible.
- Do not put or paste any object on or near the steering wheel cover or the right side of the instrument panel where the airbag are located. Do not knock on these two locations. For cleaning, only use dry or damp cloth.

Downloaded from www.Manualslib.com manuals search engine

NOTICE

- Never allow a child without proper restraint to sit in the front seat. The child could be killed by the deployed airbag in an accident.
- Don't allow any person, animal or object to stay between the driver/front seat passenger and the air bags. It is extremely dangerous to hold a child on your lap.
- Don't allow any person, animal or object to stay between the driver/front seat passenger and the air bags. It is extremely dangerous to hold a child on your lap.
- Never modify any airbag system component, including the labels.
- All operations to the airbag system, including removing it for repairing other parts (such as detachment of the steering wheel), should be made only by a BYD service station.
- The airbag system must be replaced in a BYD service station within 15 years as of the date of delivery (manufacturing date indicated in the quality certificate and *Repair Manual*). If any part of the airbag system is replaced before that date, it shall be recorded in the *Repair Manual*.

NOTICE

- Don't reuse a deployed airbag. Replace the airbag system immediately after it is triggered or damaged.
- When you resell the vehicle, don't forget to hand over all relevant documents supplied with the vehicle. Even if the airbag system is deactivated, the relevant documents must be handed over to the next owner as well.
- When scrapping your vehicle or the airbag system, please comply with applicable safety regulations and disposal procedures. You can contact a BYD service station to get knowledge on these regulations and the detailed disposal procedure, which is also available on the *Repair Manual*.
- The airbag system can

Downloaded from www.Manualslib.com manuals search engine

withstand high level of electromagnetic interference and disturbance. However, to avoid accidents, do not use the vehicle beyond the electromagnetic environment specified by applicable laws.

- BYD has taken the common misuse of the vehicle and various road conditions into full consideration when presetting the airbag triggering conditions. However, avoid intensive striking on the bottom and do not drive the vehicle toughly under poor road conditions in order to prevent accidents.

Deactivate Airbags

According to laws, airbags for the driver and the front passenger can be deactivated only in particular cases, such as:

- When it is impossible to keep a 25cm distance between the center of the steering wheel and the chest of the driver even though the driver's seat is properly adjusted;
- When a special equipment must be installed for the disabled near the steering wheel;
- When adjustment of the front passenger seat which is required for a specific reason makes it impossible to keep the seat within the scope set by the manufacturer.

Deactivation of the airbag system must be conducted by a BYD service station. After a certain airbag is deactivated, the BYD service station must place a warning label on the corresponding position and add a record in *Repair Manual*.

⚠ CAUTION

If the airbag system must be deactivated in particular cases, it shall be conducted by a BYD service station. Otherwise the airbag can cause severe injury or death!

The deactivated airbag must be activated as soon as possible to provide protection to the occupant.

Downloaded from www.Manualslib.com manuals search engine

Supplemental Information

- Read this manual carefully; to sell or scrap the vehicle, you must inform that the vehicle is equipped with SRS airbag system and hand over this manual for reference.
- The air bag components will be very hot after deployment. Do not touch them. The deployed airbag system must be dismantled and replaced by a BYD service station.
- The airbag is designed to deploy in a moderate to severe head-on collision. The fact that the airbag doesn't inflate in a collision does not mean that something is wrong with the system. However, abnormal repair or unrepaired fault in the vehicle may cause failure of airbag deployment.

⚠ CAUTION

Pay attention to the status of the SRS warning indicator. Abnormal airbags can cause severe injury.

If the SRS warning indicator prompts a potential danger, have your vehicle repaired in a BYD service station as soon as possible.

Airbag Maintenance

Generally the airbag system cannot be repaired and it includes no part that you can service safely by yourself. In any of the following cases, you must have your vehicle serviced:

1. If an airbag has deployed. A deployed airbag must be replaced together with the control device and relevant components. Never attempt to dismantle or replace an airbag by yourself. Airbag system must be serviced only by a BYD service station.
2. If SRS warning indicator prompts that a fault exists in the system. Have your vehicle serviced in a BYD service station as soon as possible. The airbag may fail to deploy in an accident if you ignore the prompt of the SRS warning indicator.

Downloaded from www.Manualslib.com manuals search engine

The airbag system must be serviced by trained professionals. Never dismantle any airbag component from the vehicle. In case of any fault in the airbag system, assign the repair or troubleshooting to a BYD service station.

Supplemental Safety Information

1. Never attempt to dismantle the airbag. The airbag system can provide maximum protection when it functions normally.

2. Never tamper with any airbag components or wire harness. Otherwise it could cause unexpected airbag deployment, leading to severe personal injury.

Downloaded from www.Manualslib.com manuals search engine

Downloaded from www.Manualslib.com manuals search engine

Chapter 1 Instruments & Control System

1.3 Steering Wheel and Rearview Mirror

Tilt and Telescopic Steering Column.....1-60
Exterior rearview Mirrors 1-60
Anti-dazzle Inner Rearview Mirror 1-63

Downloaded from www.Manualslib.com manuals search engine

Tilt and Telescopic Steering Column

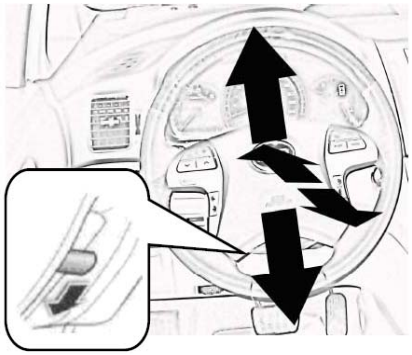

To change the steering wheel angle, hold the steering wheel, press down the steering wheel adjusting handle and adjust the steel wheel to desired angle. Release the adjusting handle to allow the lever to return to the lock position.

To change the steering wheel height, press down the steering wheel adjusting handle and adjust the steel wheel to desired height. Release the adjusting handle to allow the lever to return to the lock position.

⚠ CAUTION

- Never adjust the steering wheel while the vehicle is moving, otherwise it could cause the loss of control of the vehicle.
- After adjustment, shake the steering wheel to make sure it is locked firmly.

Exterior rearview Mirrors

Adjust the exterior rearview mirrors so that you can see side of the vehicle.

In case that the rearview mirror is not clear, press the rear window defroster switch to eliminate humidity.

⚠ CAUTION

- Never adjust the rearview mirror while the vehicle is moving, otherwise it could cause the loss of control of the vehicle.
- After turning on the defroster, the mirror will become hot. Do not touch the mirror!

Downloaded from www.Manualslib.com manuals search engine

Power Mirror Control

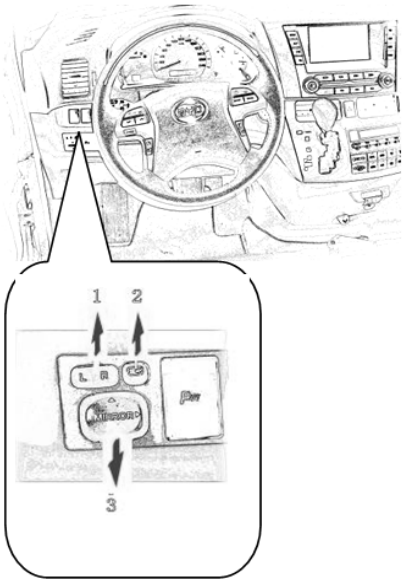

1. Selection switch
2. Power folding button
3. Regulating switch

Adjust Rearview Mirror

Adjust the rearview mirror with the following switches:

Selection switch – select the rearview mirror you want to adjust.

Press L/R on the switch to select a mirror.

Regulating switch – adjust the rearview mirror as you desire.

Press the switch in the direction you want.

The ignition switch must be at ACC or ON.

NOTICE

When the rearview mirror is frozen, don't operate the control switch or wipe the mirror. Use a spraying deicer to eliminate the ice first.

After adjustment, turn the selection switch to the center OFF position. At this time, the regulating switch is disabled to prevent accidental mirror operation.

Downloaded from www.Manualslib.com manuals search engine

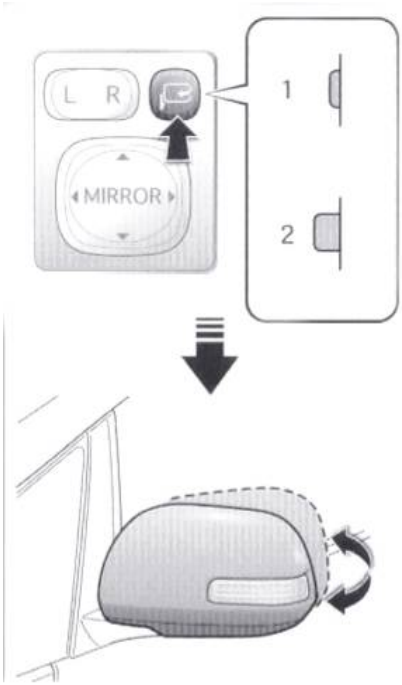

Power Folding Mirror (if equipped)

To park the vehicle in narrow space, you can fold the power mirrors to protect the mirror against impact.

The ignition switch must be at ACC or ON.

Position 1 – fold the power mirrors.

Position 2 – reset the power mirrors.

When activating anti-theft status, the power mirrors will fold; when deactivating anti-theft status, the power mirrors will unfold. (See Anti-theft System in section 1.1)

⚠ CAUTION

- When adjusting the power mirror, don't touch it to prevent personal injury and damage to the mirror.
- Don't adjust the power mirror when the vehicle is moving. Unfold and properly adjust both power mirrors before driving the vehicle.

Manual Folding Mirror (if equipped)

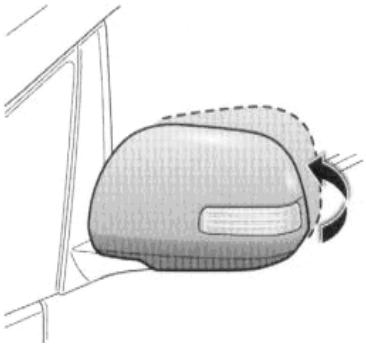

To park the vehicle in narrow space, fold the rearview mirrors backward to prevent damage.

Push the mirrors backwards to fold them.

⚠ CAUTION

Don't adjust the rearview mirror when the vehicle is moving. Unfold and properly adjust both rearview mirrors before driving the vehicle.

Downloaded from www.Manualslib.com manuals search engine

Anti-dazzle Inner Rearview Mirror

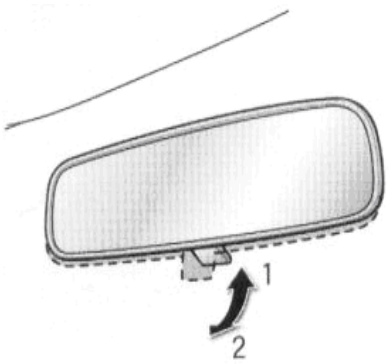

Adjust the interior rearview mirrors so that you can see the rear of the vehicle.

The interior rearview mirror works in daylight mode when driving in daylight and in night mode when driving at night. The night mode can reduce the intensity of the light emitted by rear vehicles.

Daylight driving – set the control lever to position 1.

The mirror provides the clearest view in this mode.

Night driving – set the control lever to position 2.

As the intensity of reflected light drops, the sharpness of the mirror image also reduces.

⚠ CAUTION

Never adjust the rearview mirror while the vehicle is moving, otherwise it could cause the loss of control of the vehicle.

Calibrate Interior Rearview Mirror

1. Pay attention to the followings before calibration:

(1) The direction displayed in the interior rearview mirror is the straight ahead direction for the vehicle. But under calibration status, the text shown in the interior rearview mirror is only for information purpose, not indicating the actual straight ahead direction.

Downloaded from www.Manualslib.com manuals search engine

(2) A paper clip is required for calibration.

(3) Select open ground or a circular road for the calibration. Identify the directions of the east, west, south and north, as shown in the figure below.

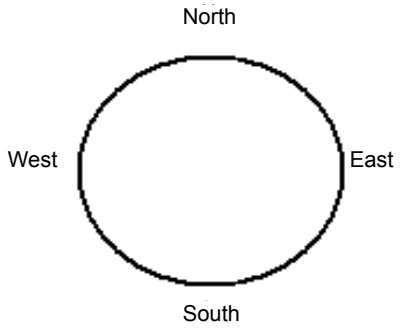

2. Calibration procedure

(1) Start the engine. There is text shown at the top right of the interior rearview mirror, which can be any one of east, south, west, north, northwest, southwest, northeast and southwest.

(2) Select the starting position. It can be any one of east, south, west and north.

(3) To enter the compass calibration status, press OK button on the rear side of the interior rearview mirror using a paper clip.

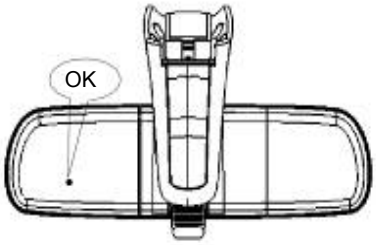

"North" will be displayed in the mirror. It will flash for two times and then stop.

(4) Drive the vehicle for a complete circle at low speed (less than 8 km/h) and stop at the starting position with the engine running. Don't stop the engine before you complete a circle clockwise or anticlockwise.

Downloaded from www.Manualslib.com manuals search engine

(5) Change the orientation of the vehicle until the front end pointing the south. Press OK, "South" will be displayed in the mirror. At this time, press Ok again, if "South" flashes for 2 times and then stops, the calibration is completed. The mirror will exit calibration and return to normal status.

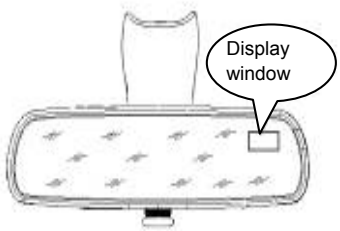

Otherwise, if "West" is displayed when pressing OK button again, shut down the engine and repeat the procedure above from step (1). If any text other than "West" is displayed, repeat the procedure above from step (2) without turning off the engine.

(6) After calibration, drive the vehicle for another circle to check whether correct text is displayed for each direction. If abnormal, repeat the calibration procedure from step (1).

Downloaded from www.Manualslib.com manuals search engine

Downloaded from www.Manualslib.com manuals search engine

Chapter 1 Instruments & Control System

1.4 Switches

Headlight Switch.....1-68
Front / Rear Fog Light Switch.....1-69
Turn Signal Light Switch.....1-71
Hazard Warning Flasher Switch.....1-72
Front Windshield Wiper / Washer.....1-72
Rear Windshield Wiper / Washer.....1-73
Rear Windshield and Exterior Rearview Mirror Defrosters.....1-74

Downloaded from www.Manualslib.com manuals search engine

Headlight Switch

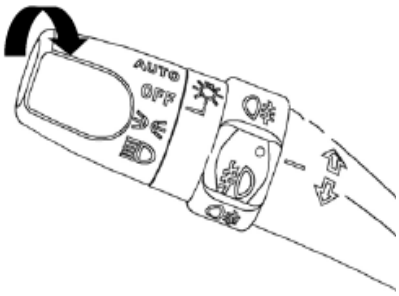

The rotation switches (AUTO, OFF, and) on the lever controls the width-indicator lights and headlights.

- turn on front/rear width-indicator lights, number plate lights and backlights.

- turn on headlights (low beam).

AUTO – turn on/off headlights according to the intensity of ambient light.

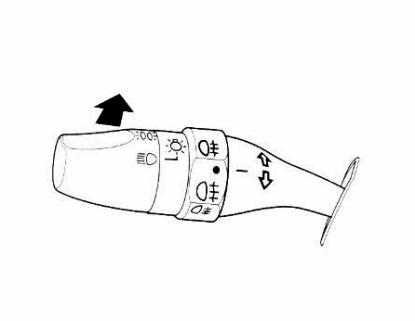

High/low beam: to use the high beams, turn on the headlights and push the lever outward away from the steering wheel. To use the low beams, pull back the lever.

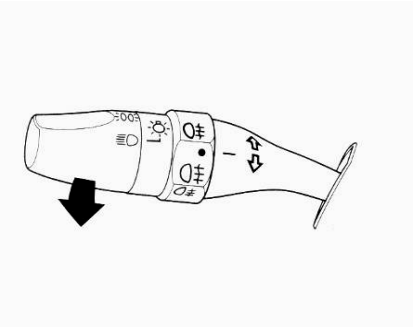

Headlight Flashing

No matter what position the headlight switch is, if you pull the lever backward to the steering wheel side, the high beams stay flashing. Release the lever to allow it to return to the previous position, and the high (low) beams go out. The high beams stay on as long as you pull the lever backward.

The position of the headlight switch is indicated by indicators (see the relevant part in section 1.5).

Downloaded from www.Manualslib.com manuals search engine

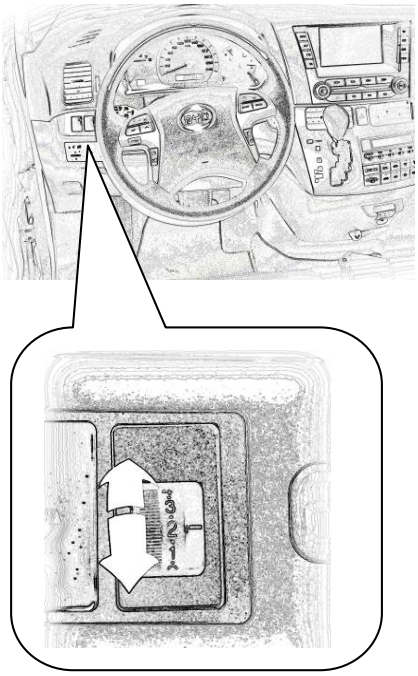

Adjust Headlight Beam Direction

The position of headlights varies with the load the vehicle. You can adjust the headlight beam direction to prevent other drivers from being dazzled.

Rotate the knob to adjust the headlight beam direction.

The higher value of the knob, the lower the headlight beam direction is.

Front / Rear Fog Light Switch

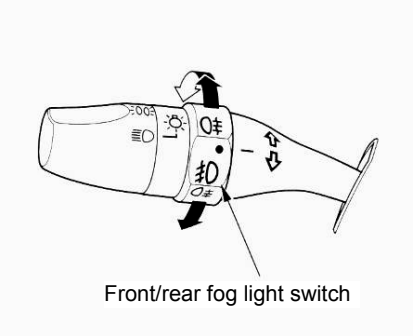

Front/rear fog light switch

The front/rear fog light switch is located beside the headlight switch (front fog light, rear fog light). When the light switch is at or , you can turn on the front fog light with this switch. When the light switch is at or when the front fog lights turned on, you can turn on the rear fog lights with this switch.

When the light switch is at or , turn the switch upward from OFF

Downloaded from www.Manualslib.com manuals search engine

(•) to to turn on the front fog lights; at this time the indicator on the instrument panel is turned on for reminding. Turn the switch downward from to OFF (•) to turn off the front fog lights; at this time the indicator goes off.

When the light switch is at , turn the fog light switch downward from OFF (•) to , the rear fog lights are turned on and the switch returns to (•) position; turn the fog light switch downward from OFF (•) to again, the rear fog lights go out and the switch returns to (•) position. When the front fog lights are turned on, turn the fog light switch upward from to , the rear fog lights will be turned on with the front fog lights staying on, and the fog light switch will return to ; turn the fog light switch upward from to again, the rear fog lights will go out and the fog light switch will return to .

Fog lights are turned out: (1) When the rear fog lights are turned on while the front fog lights remaining off, if the headlights are turned off, the rear fog lights will be turned off; (2) When the light switch is turned to OFF, both front and rear fog lights will be turned off. If the light switch is turned to , the front fog lights will be turned on while the rear fog lights remaining off. If you want to turn off the front fog lights, rotate the fog light switch downward to (•) position; to turn on the rear fog lights again, turn the light switch to or turn on the front fog lights, and then rotate the fog light switch.

Automatic Light-off Function

Enable automatic light-off function: when the headlight switch is at or , turn the key from II to I position to enable this function.

When enabled, this function will automatically turn off the headlights, width-indicator lights, front/rear fog lights and high beam lights 10 seconds after the front doors are closed.

When enabled, this function will automatically turn off the headlights, width-indicator lights, front/rear fog lights and high beam lights 10 minutes after either front door is open.

After light-off, if you operate the light switch, the relevant lights will be turned on; if the conditions for automatic light-off remain valid, the light-off function will be triggered again.

Downloaded from www.Manualslib.com manuals search engine

After light-off, open either front door to turn on the relevant lights which have been turned off automatically.

Disable automatic light-off function: turn the key to II position to disable this function so that the light knob will operate lights normally.

If the vehicle enters anti-theft status after automatic light-off, when the anti-theft status is deactivated, the lights which have been turned off will be turned on again. If neither front door is opened within 10 seconds, the light-off function will be triggered again. If either door is opened, the automatic light-off function will turn off the lights within 10 minutes.

Turn Signal Light Switch

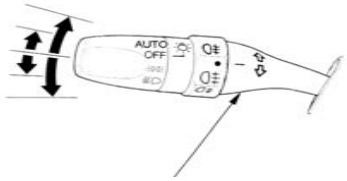

Turn signal lever

Turn signal lights, which give turn or lane change signals to other drivers, are operated independently of other lights.

Push the turn signal lever upward, all turn signal lights on the right side are turned on and keep flashing, even if you release the lever.

Push the turn signal lever downward, all turn signal lights on the left side are turned on and keep flashing, even if you release the lever.

Reset the turn signal lever to the center, all turn signal lights are turned off. Push the turn signal lever upward/downward to give turn signals.

Push the turn signal lever upward/downward partially and hold it there to give lane change signals.

Downloaded from www.Manualslib.com manuals search engine

Hazard Warning Flasher Switch

Press the switch shown in the figure to turn on the hazard warning flashers.

All turn signal lights keep flashing on and off. Press the switch again to turn the flashers off.

If you have to operate the vehicle under hazardous conditions, such as parking it near moving traffic, turn on the hazard warning flashers to warn other drivers.

Park the vehicle away from the road.

When the hazard warning flashers are on, the turn signal lights will not work.

Front Windshield Wiper / Washer

Use the lever to operate the windshield wipers.

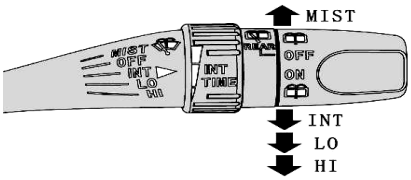

Mist: wipe for a single cycle.

OFF: turn off the wipers.

INT: wipe intermittently.

LO: wipe steadily at low speed.

HI: wipe steadily at high speed.

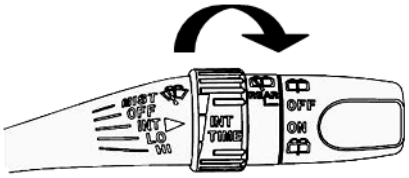

When the wiper control lever is at INT, rotate the knob marked with INT Time to adjust the interval of wiping circles. Rotate the knob upward to increase the interval, and downward to reduce the interval.

The wipers operate steadily at LO and HI.

For Mist wiping, push the lever upward from OFF. The wipers will operate at high speed until you release the control lever. In this mode the windshield can be cleaned rapidly.

NOTICE

- Do not use the wipers when the windshield is dry. Or the windshield glass could be scratched.

Downloaded from www.Manualslib.com manuals search engine

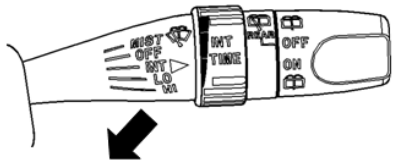

To wash the windshield, pull the wiper control lever backward.

When the wipers are not working, they will wipe for several times after the washer fluid is sprayed.

If the control lever is released shortly, the wipers will not operate after washer fluid spraying; if the control lever is hold for long time, the wipers will wipe at low speed, and when you release the lever, the wipers will continue to wipe for several times before stopping.

NOTICE

- Regularly check the wiper blades and, if necessary, clean them with cotton cloth and rubbing alcohol.
- When the windshield is stained with heavy dust, first flush it with water and then use the wipers to clean it.
- Do not use any detergent other than the windshield washer fluid, or the wiper blades could be damaged.

Rear Windshield Wiper / Washer

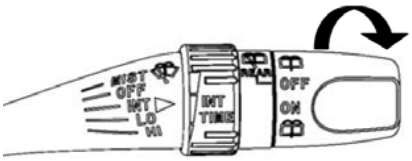

Rotate the knob on the control lever to turn on the rear windshield wipers.

Rotate the knob to ON to start the rear wipers;

Rotate the knob to OFF to stop the rear wipers;

When you rotate the knob downward from ON to , or upward from OFF to , the rear washers and blades will start.

Downloaded from www.Manualslib.com manuals search engine

NOTICE

- Do not use the wipers when the windshield is dry, or the windshield glass could be scratched.
- Do not lift up the wiper arms too far, or they could be broken.
- Regularly check the wiper blades and, if necessary, clean them with cotton cloth and rubbing alcohol.
- When the windshield is stained with heavy dust, first flush it with water and then use the wipers to clean it.
- Do not use any detergent other than the windshield washer fluid, or the wiper blades could be damaged.

Rear Windshield and Exterior Rearview Mirror Defrosters

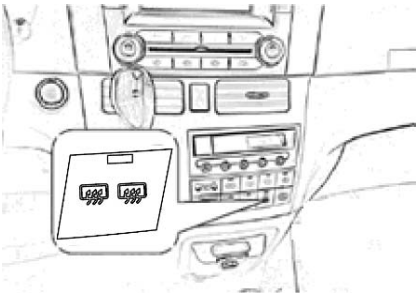

Press the button on the A/C panel to turn on/off the rear defroster.

The ignition switch must be at ON.

The indicator on the button is turned on, indicating the rear defroster is working.

The rear defroster can remove fog, frost and thin ice from the windshield.

Press the button again to turn off the defroster.

The defroster will stop after working for 15 minutes.

When the rear defroster is working, if you turn off the ignition switch, the defroster will stop too; when the engine is started again, the defroster will also be turned on.

The heating element of the rear defroster could be damaged accidentally. When cleaning the rear windshield, only wipe in horizontal direction.

NOTICE

- When cleaning the inside of the rear windshield, do not scratch or damage the heating element or its connector.
- To prevent battery discharge, do not start the defroster when the engine is not running.

Downloaded from www.Manualslib.com manuals search engine

Chapter 1 Instruments & Control System

1.5 Instrument and Multifunction Display

Combination Instrument 1-76
Tachometer 1-77
Speedometer 1-77
Odometer 1-77
Trip Odometer 1-77
Coolant Thermometer 1-77
Fuel Gauge 1-77
Coolant Thermometer 1-78
Gear Display (if equipped) 1-78
Mileage Information Display 1-78
Indicators and Buzzer 1-79
Multifunction Display 1-85

Downloaded from www.Manualslib.com manuals search engine

Combination Instrument

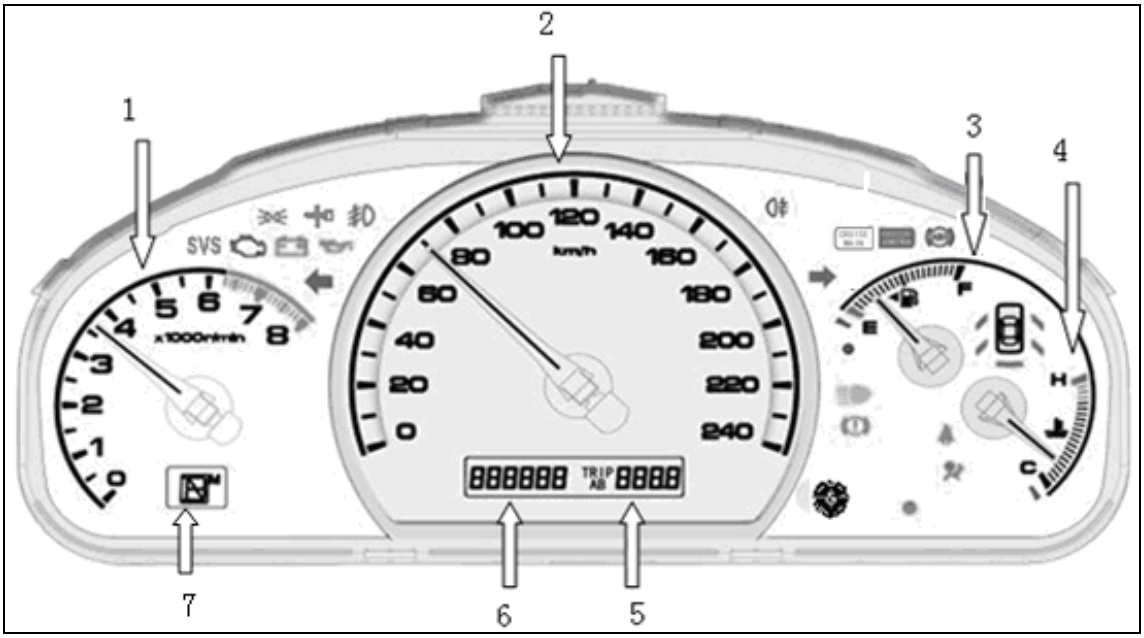

1. Tachometer
2. Speedometer
3. Fuel guage
4. Coolant thermometer
5. Trip odometer
6. Odometer
7. Gear display

Downloaded from www.Manualslib.com manuals search engine

Tachometer

The tachometer is an instrument measuring the rotation speed of the engine (in 1000 r/m).

To prevent damage to the engine, do not let the pointer of the tachometer enter the red area.

Speedometer

The odometer is an instrument measuring the vehicle speed in km/h.

Odometer

The odometer is an instrument that indicates the total distance traveled by a vehicle.

Trip Odometer

The trip odometer shows how far you have traveled since you last reset it.

There are two trip odometers on the instrument panel. Press the trip odometer reset button repeatedly to switch between the displays of the two trip odometers. The two trip odometers work independently, so you can have two trip records.

When the power is at ON, the reading of the trip odometer you last chose is displayed.

To reset a trip odometer, first chose the odometer you want to reset and then press and hold the reset button until the reading reaches "0.0".

Coolant Thermometer

When turning on the ignition switch, the coolant thermometer shows the engine coolant temperature.

When the engine is running normally, the pointer will rise from the bottom to near the middle of the thermometer.

Under poor driving conditions, such as in hot summer days or on a long uphill road, the engine may be overheated.

The pointer entering the red H (Hot) area indicates that the engine is overheating, and you must stop the vehicle immediately.

Fuel Gauge

The fuel gauge displays the fuel level in the tank.

The reading of the fuel gauge is most accurate when driving the vehicle on a level road; on mountains or in turning the gauge reading fluctuates with the particular conditions.

When the ignition switch is at ON, the pointer will show the reading of the fuel level. When the ignition switch is turned to OFF, the pointer will stop at the bottom.

During braking, accelerating or turning, the pointer may swing since the fuel level fluctuates in the tank.

Downloaded from www.Manualslib.com manuals search engine

Refill the fuel tank as soon as possible if the oil level is near E or the fuel level warning indicator is turned on.

But on an incline or turning road, the pointer may indicate low fuel level and the fuel level warning indicator may be turned on earlier due to the fluctuating fuel level in the tank.

NOTICE

- Do not drive on a low fuel level. At very low fuel level, the engine may flame out, causing damage to the catalytic converter.

Coolant Thermometer

If you press the Start button and turn the power to ON, the pointer will rise to the corresponding scale indicating the engine coolant temperature.

When the engine is running normally, the pointer stays near the middle of the thermometer.

Under poor driving conditions, such as in hot summer days or on a long uphill road, the engine may be overheated.

The pointer entering the red H (Hot) area indicates that the engine is overheating, and you must stop the vehicle and contact a BYD service station immediately.

Gear Display (if equipped)

This screen displays the gear you are in.

Mileage Information Display

This screen displays the information of the odometer and trip odometer.

The odometer is an instrument that indicates the total distance traveled by a vehicle.

The trip odometer shows how far you have traveled since you last reset it. There are two trip odometers on the instrument panel. Press the trip odometer reset button repeatedly to switch between the displays of the two trip odometers. The two trip odometers work independently, so you can have two trip records.

When the power is at ON, the reading of the trip odometer you last chose is displayed.

To reset a trip odometer, first chose the odometer you want to reset and then press and hold the reset button until the reading reaches “0.0”.

Downloaded from www.Manualslib.com manuals search engine

Indicators and Buzzer

Downloaded from www.Manualslib.com manuals search engine

There are multiple indicator lights on the instrument panel indicating important information of the vehicle.

Driver's seat belt indicator

The driver's seat belt reminder system alerts the driver to properly wear the seat belt by means of sound and visual indication.

If you press the Start button and turn the power to ON, the seat belt indicator will flash and the buzzer will sound, alerting the driver to fasten the seat belt. If you drive the vehicle without wearing the seat belt, the indicator keeps flashing with the buzzer giving out alarm tone. If the seat belt is not fastened after a certain period of time, the indicator stays on and the buzzer stops.

When the seat belt is buckled, the indicator will be turned off and the buzzer will stop.

Oil pressure indicator

This indicator gives warning when the engine oil pressure is low.

If you press the Start button and turn the power to ON, this indicator will turn on and stay on until the engine is started.

If this indicator is flashing or stays on in driving, it indicates that there is a problem with the engine oil system. Stop the vehicle immediately at a safe place. Please contact a BYD service station for help.

This indicator may also turn on when the oil level is low. This indicator is not designed to indicate low oil level. Use an oil dipstick to check the oil level.

NOTICE

Do not keep driving when this indicator is turned on. Otherwise the engine may be damaged.

Charging system indicator

If you press the Start button and turn the power to ON, this indicator will turn on and stay on until the engine is started.

If this indicator turns on when the engine is running, it indicates there is a problem with the electrical charging system. Immediately turn off all electrical accessories, such as the radio, and contact a BYD service station for help.

Engine fault indicator

If you press the Start button and turn the power to ON, this indicator will turn on for a few seconds.

If there is a fault with the engine in driving, this indicator will turn on. Stop the vehicle at a safe place and turn off the engine. Start the engine again and check whether this indicator stays on. If it does, contact a BYD service

Downloaded from www.Manualslib.com manuals search engine

station for help.

Parking brake system indicator

This indicator can give warning for two types of faults.

If you press the Start button and turn the power to ON, this indicator will turn on in the following cases:

1. When the parking brake is applied

   If you press the Start button and turn the power to ON, this indicator will turn on to remind you to check the hand brake. This indicator will stay on until the hand brake is released, and meanwhile, if your drive the vehicle, the buzzer will sound repeatedly. Driving the vehicle with the handbrake unreleased will cause damage to the brake and tires.

2. When the brake fluid level is low

CAUTION

Driving with low brake fluid level is very dangerous!

Contact a BYD service station in the following cases:

- If you press the Start button and turn the power to ON, this indicator will not turn on when the parking brake is applied.
- After the parking brake is released, this indicator will not turn on when the power is turned to ON.

The fact that this indicator turns on temporally does not mean that something is wrong.

CAUTION

In any of the following cases, immediately stop the vehicle at a safe place and contact a BYD service station for help:

- When the engine is running, this indicator stays on after the parking brake is released.
- In this case, maybe the brake is not working normally and the braking distance becomes longer. Press the brake pedal hard to stop the vehicle immediately.
- The braking system indicator stays on when the ABS warning indicator is turned on.
- In this case, maybe the ABS is not working and the vehicle becomes hard to control.

Downloaded from www.Manualslib.com manuals search engine

Supplemental Restraint System (SRS) indicator

This indicator shows the status of the airbag system.

If you press the Start button and turn the power to ON, this indicator will turn on for a few seconds. It indicates the airbag system is working normally.

If the indicator turns on at any other time, or never turns on, contact a BYD service station to have your vehicle serviced. For example:

- If you press the Start button and turn the power to ON, this indicator does not turn on or always stays on.
- This indicator turns on when you are driving the vehicle.

In these cases the airbag system may not work in a collision. Contact a BYD service station for help.

Anti-Lock Brake System (ABS) indicator

If you press the Start button and turn the power to ON, this indicator will turn on. If the ABS system and brake assist system are working normally, it will go out in several seconds. If there is a problem with either of the two systems mentioned above, this indicator will turn on again.

When the ABS indicator turns on while the conventional brake system indicator isn't on, the ABS and brake assist system are not working normally, but the conventional brake system still works.

At this time, the wheels may be locked in hard braking or in braking on slippery road surface.

In any of the following cases, there is a problem with the components that are monitored by this indicator. Contact a BYD service station as soon as possible to have the vehicle serviced.

- When the power is at ON, this indicator does not turn on or stays on.
- This indicator turns on when you are driving the vehicle.

The fact that this indicator turns on temporally does not mean that something is wrong.

Door/trunk open indicator

If any side door or rear door is open, the corresponding indicator will turn on.

Left turn and right turn indicator

During turning or lane change, when the left/right turn signal light is turned on, the corresponding turn indicator will flash. If the turn indicator is not flashing or is flashing quickly, normally

Downloaded from www.Manualslib.com manuals search engine

it indicates one of the turn signal bulbs is blown out. Replace the bad bulb as soon as possible so that the turn signal light can function normally.

When pressing the hazard warning switch, both turn indicators will flash. All exterior turn signal lights will flash at the same time.

Width-indicator light indicator

This indicator shows that the exterior width-indicator lights are turned on.

When the headlight switch is at or , this indicator will turn on; when the power is turned to ACC/OFF while the headlight switch is not turned off, this indicator will stay on.

When the headlight switch is at , rotate the odometer reset button on the instrument panel to adjust the backlight intensity for the instruments and the panel.

Low fuel level indicator

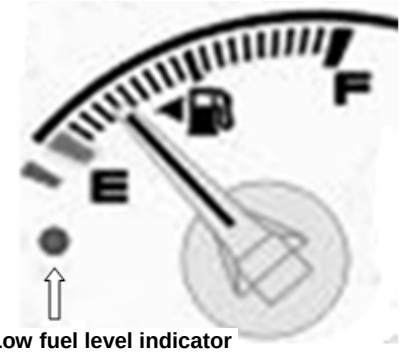

Low fuel level indicator

This indicator is located on the fuel gauge.

This indicator is turned on when the fuel level in the tank is low; it will keep flashing to remind you to refill the fuel if the tank is near empty. But on an incline or turning road, the fuel level warning indicator may be turned on earlier due to the fluctuating fuel level in the tank.

Security system indicator

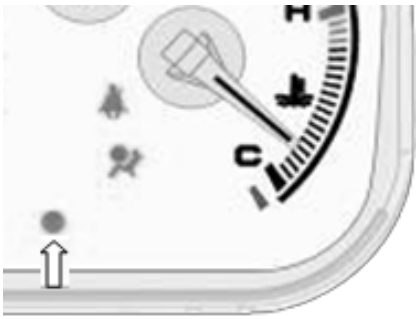

Security system indicator

When you activate the anti-theft system, this indicator will turn on and start flashing after a few seconds, indicating that the vehicle is in anti-theft status.

Downloaded from www.Manualslib.com manuals search engine

High beam indicator

This indicator is on when the high beam lights are turned on.

Front fog light indicator

This indicator is on when the front fog lights are turned on. See the description on the operation of front fog lights in section 1.4.

Rear fog light indicator

This indicator is on when the rear fog lights are turned on. See the description on the operation of rear fog lights in section 1.4.

CRUISE MAIN Cruise indicator (if cruise control is available)

This indicator turns on when you press the cruise control master button (see "Cruise System" in section 1.6).

CRUISE CONTROL Cruise control main indicator (if cruise control is available)

This indicator turns on when the vehicle enters cruising status, indicating that the vehicle is moving at a steady speed.

SVS SVS Indicator

If you press the Start button and turn the power to ON, this indicator will turn on for a few seconds. If this indicator turns on at any other time or keeps flashing, it indicates there is a problem with the AT transmission or engine management system. In this case, have your vehicle serviced in a BYD service station as soon as possible.

Smart key system warning indicator

If you press the Start button without a smart key, this indicator will turn on for a few seconds and the buzzer will sound once; if you press the Start button with a smart key nearby, this indicator will not turn on and the vehicle will power up.

When this indicator is on, if you take a smart key into the vehicle in several seconds, this indicator will go out. The steering shaft lock is released and the vehicle will power up.

If this indicator is flashing when pressing the Start button, it indicates the power level of the smart key battery is low.

Downloaded from www.Manualslib.com manuals search engine

Multifunction Display

Indicators

Left/right turn indicator

These two indicators operate in the same way as the left/right turn indicators on the instrument panel.

Seat belt indicator

This indicator operates in the same way as the seat belt indicator on the instrument panel.

Smart key system warning indicator

This indicator operates in the same way as the smart key system warning indicator on the instrument panel. When you press the Start button without a smart key, this indicator turns on and the buzzer also sounds once.

Car phone indicator

This indicator turns on when the car phone gets an incoming call.

This indicator stays on during a phone call until on-hook.

MP3 player indicator

This indicator turns on when you are using the MP3 player function of the car phone. This indicator goes out when you turn off the MP3 player.

Downloaded from www.Manualslib.com manuals search engine

1. Outside temperature display
2. Reverse sensor indicator
3. Clock display
4. Speed indicator
5. Transient fuel consumption display

Outside temperature display

When the A/C is working, the accurate outside temperature is displayed on the multifunction display (unit: °C).

Reverse sensor indicator

If you press the Start button and turn the power to ON, when you press the reverse sensor switch, the reserve sensor icon will be displayed on the LCD screen and the buzzer will sound once; when your shift to Reverse gear, the buzzer will sound again. When an obstacle is detected, the reserve sensor icon will be displayed on the LCD screen and the buzzer sounds repeatedly. The closer to the obstacle, the less bars are displayed in the reverse sensor icon, and the more quickly the buzzer sounds. It may give out a long sound if the obstacle is very near. (See "Parking Assist System" in section 1.6.)

Clock display

If you press the Start button and turn the power to ACC/ON, the time information in 24-hour system will be displayed on the multifunction screen, including year, month, day, hour, minute and week-day names. Each blinking of the colon represents one second. To adjust the time, press the buttons on the left of the multifunction screen: choose the item to adjust with SWITCH button, and confirm the adjustment with SET button.

Speed display

This displayed speed is identical with that indicated by the speedometer pointer.

Downloaded from www.Manualslib.com manuals search engine

Chapter 1 Instruments & Control System

1.6 Other Equipments

Interior Lights....1-88
Door Lights....1-89
Sunglasses Bracket....1-89
Sun Visor....1-90
Make-up Mirror (if equipped)....1-90
Bill Holder....1-90
Hat and Coat Hook....1-90
Security Handle....1-91
Carpet Mat....1-91
Left Bottom Small Glove Box....1-92
Glove Compartment....1-92
Card Box....1-93
Rear Quarter Armrest Seat....1-93
Auxiliary Fascia Console....1-93
Front Door Panel....1-94
Rear Door Panel....1-94
Cigarette Lighter....1-95
Power Sockets....1-95
Parking Assist System (if equipped)....1-96
Parking Vision System (if equipped)....1-100
Cruise Control (if equipped)....1-104
Vehicle Telephone System (if equipped)....1-105

Downloaded from www.Manualslib.com manuals search engine

Interior Lights

Front Interior Lights

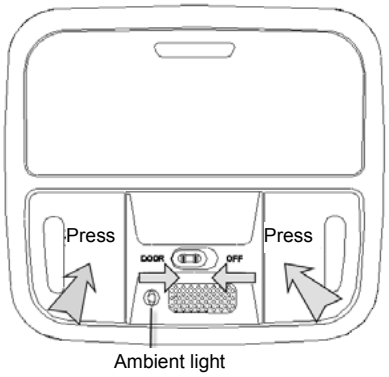

The front interior light is operated with a 2-position slide switch:

DOOR position – the light will be turned on when you open any door;

OFF position – the lights will always remain off.

You can also operate the 2 lights separately through the light covers: press a light cover to turn on a light and press it again to turn the light off.

When the switch is at DOOR position, if any door is open, you cannot operate a light by pressing its light cover.

When the switch is at DOOR position, the lights will turn on when the key is pulled out of the ignition switch. If you do not open any door, the lights will go out after some 30 seconds.

When the switch is at DOOR position, if you open any door with a key or remote controller, the front lights will turn on. After all doors are closed, the front lights will turn off.

If any door remains open while the key is not in the ignition switch, the roof light will go out after some 3 minutes.

Ambient light

When the combination switch is turned to , the ambient light will turn on.

Middle Interior Lights

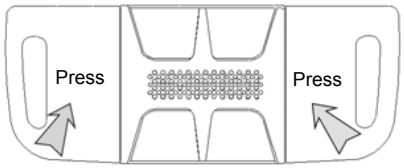

You can operate the 2 lights separately through the light covers on both sides: press a light cover to turn on a light and press it again to turn the light off.

When the front interior light switch is at DOOR position, if any door is open, the middle interior lights will stay on and you cannot operate the lights by pressing the light covers.

Downloaded from www.Manualslib.com manuals search engine

Rear Interior Lights

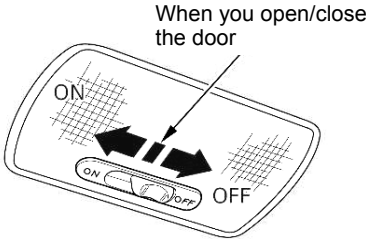

You can operate the rear interior lights with the slide switch.

OFF position – the lights will always remain off.

Middle position –when any door is open, the lights will turn on; when all doors are closed, the lights will dim out gradually within 30 seconds.

ON position – the lights will always remain on.

Door Lights

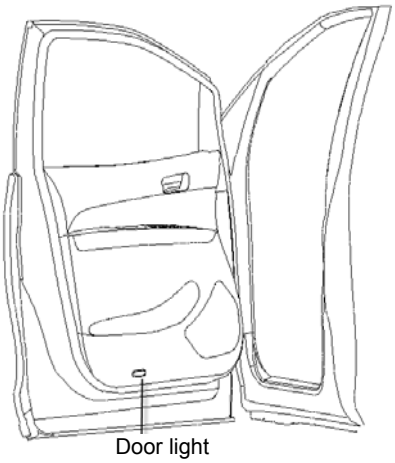

Each door has a door light. When you open a front door, its door light will turn on.

Sunglasses Bracket

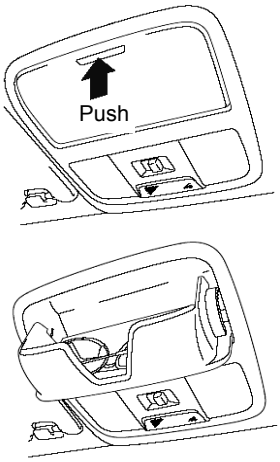

To open the sunglasses bracket, press it at the front edge. To close the sunglasses bracket, push it until it is locked in place.

Make sure the sunglasses brackets are locked firmly before you drive the vehicle.

Oversized sunglasses may not be placed in the bracket.

Downloaded from www.Manualslib.com manuals search engine

Sun Visor

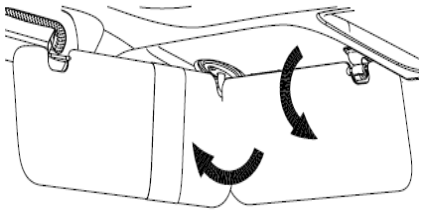

You can lower the sun visor to block light entering through the windshield.

To block light from the side window, remove the rotary joint from the hold-down support and rotate the sun visor towards the side window.

When you enter or leave the vehicle, make sure the sun visor is put back in place.

NOTICE

Use the sun visor properly can improve the comfort and safety in driving.

Make-up Mirror (if equipped)

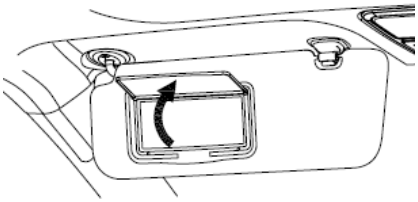

To use the make-up mirror, first pull down the sun visor and then open the cover of the mirror.

Bill Holder

It is designed to hold cards and bills.

Hat and Coat Hook

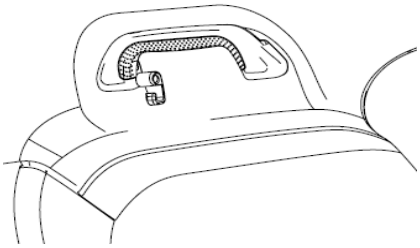

To use the hat and coat hook, just pull it down.

⚠ CAUTION

If the vehicle is equipped with side airbags or curtain airbags, do not hang any sharp or heavy object, such as a clothes rack, on the hook. When the airbags are deployed with great force, such object may be thrown out; sometimes it may hold back the deployment of the airbags. Only hang clothes on the hat and coat hook.

Downloaded from www.Manualslib.com manuals search engine

Security Handle

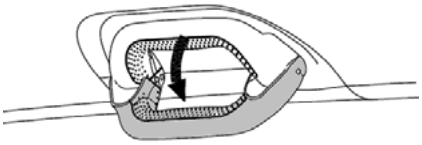

To use the security handle, just pull it down. It will go back to its original place when you release it.

Carpet Mat

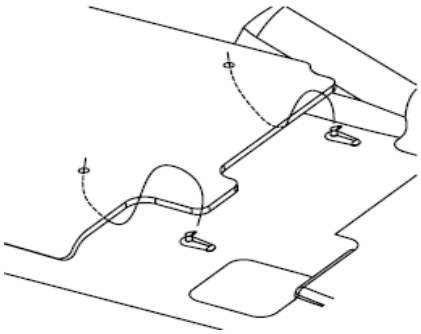

Carpet mat and carpet mat retainer clips are supplies in the standard configuration. The carpet mat is fastened by the retainer clips. The carpet mat retainer clips are designed to prevent the carpet mat from sliding ahead, which may interfere with the pedal operations.

Install Carpet Mat Retainer Clips

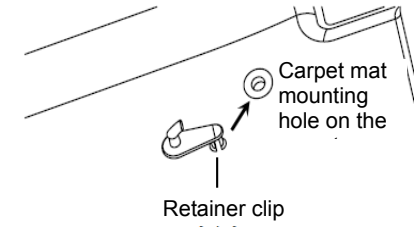

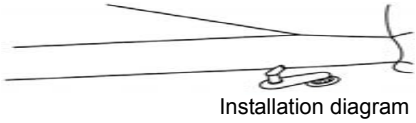

Installation diagram

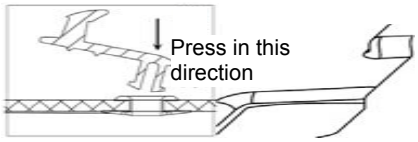

Press down the retainer clips in the direction shown in the figure above, make sure the clips are locked in place, and then install the carpet mat.

Downloaded from www.Manualslib.com manuals search engine

⚠ CAUTION

Make sure the carpet mat is fastened properly. If the carpet mat slides ahead or interferes with pedal operations, it may cause an accident in driving.

Left Bottom Small Glove Box

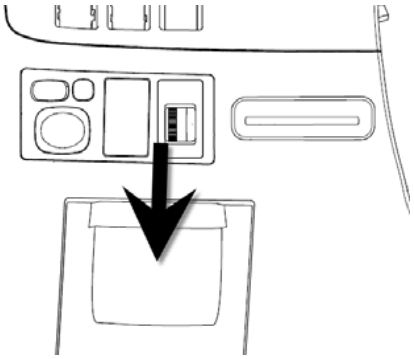

The left bottom glove box is located under the left air outlet.

Pull down the handle on the top of the glove box to open it.

Push it upward to close it.

Glove Compartment

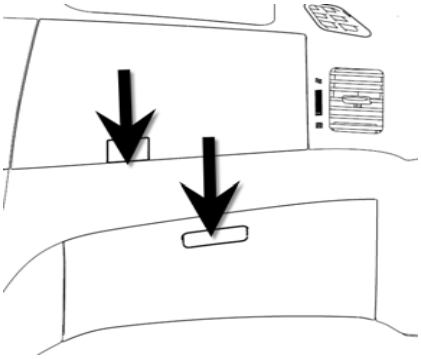

Press the button to open the top right glove box, and press the cover downward to close it.

Pull out the handle in the square hole to open the bottom right glove box, and push the glove box upward to close it.

Downloaded from www.Manualslib.com manuals search engine

Card Box

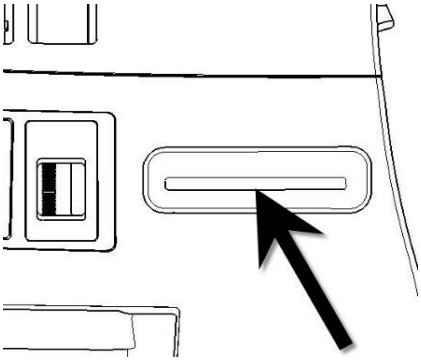

You can keep cards in the card box.

Insert a card in the direction shown in the figure, the clamp in the card box will firmly hold down the card.

To take out the card, just pull it outward.

Rear Quarter Armrest Seat

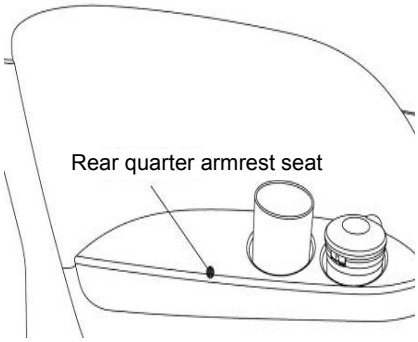

You can place a cup or ashtray in the cupholder.

Auxiliary Fascia Console

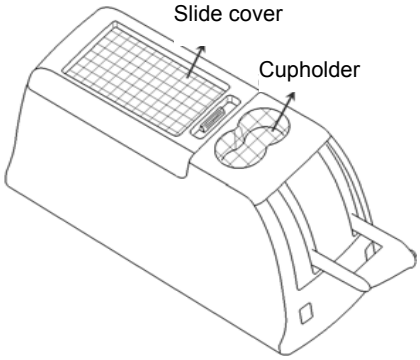

You can place a cup or bottle in the cupholder.

Do not place a tall article in the cupholder; otherwise it may topple down when operating the hand brake.

You can keep small articles in the slide cover of the auxiliary fascia console.

Downloaded from www.Manualslib.com manuals search engine

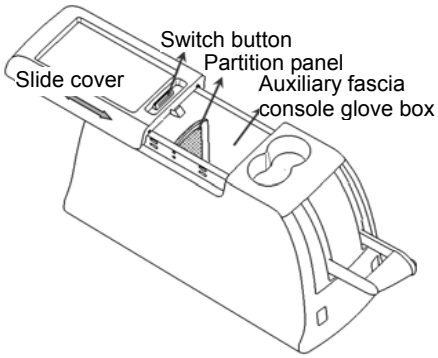

The glove box under the auxiliary fascia console has large capacity.

To open the console glove box, press the switch button to unlock it, and then slide the cover backward. You can take out the partition panel to get larger capacity. To close the console glove box, slide the cover forward and let the switch button engage firmly.

NOTICE

- When the vehicle is moving, lock the slide cover to prevent damage to it.
- Do not place a tall article in the glove box; otherwise it may topple down when operating the hand brake.

Front Door Panel

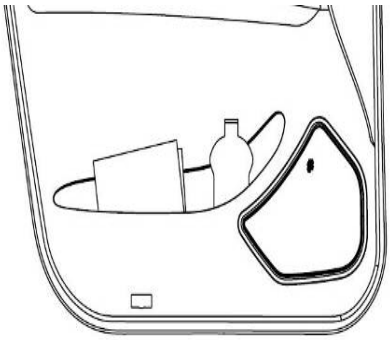

There is a cupholder and document holder in the front door panel.

Rear Door Panel

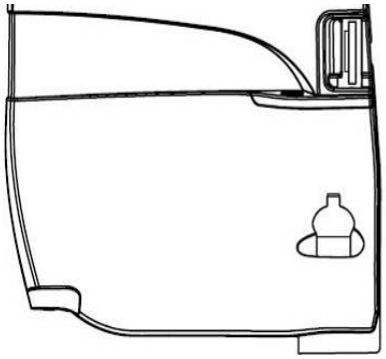

There is a cupholder in the rear door panel.

Downloaded from www.Manualslib.com manuals search engine

Cigarette Lighter

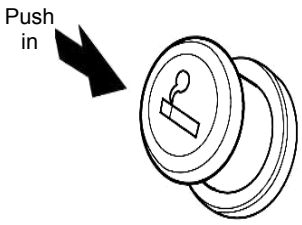

The Start button must be pressed down before using the cigarette lighter.

To use the cigarette lighter, just push it in; when it is ready for use, it will pop up. Do not hold down the cigarette lighter to prevent overheating.

Power Sockets

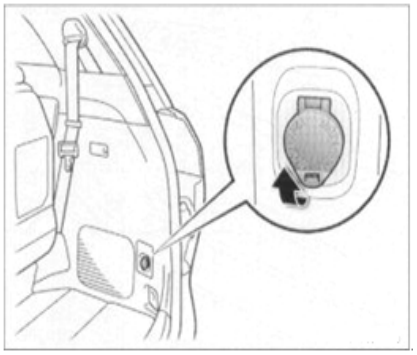

Power socket provides power to electric appliances.

When the Start button is at ACC or ON, pull up the cover to use the power socket.

NOTICE

- To prevent the fuse from blowing out, the total power consumption should not exceed 12V/120W.
- To prevent the battery from overdischarge, do not use any electric appliance when the engine is not running.
- Put the cover back in place when the power socket is not in use. To prevent electric failure or short circuit, do not insert anything other than the proper power plug into the power socket, and prevent liquids from entering it.

Downloaded from www.Manualslib.com manuals search engine

Parking Assist System (if equipped)

⚠ CAUTION

Please strictly follow the safety instructions below; otherwise it could cause an accident.

- Do not use the sensor when the vehicle is moving at high speed.
- Do not place any thing in the operating range of the sensor.

NOTICE

- Do not clean the sensor with water or steam; otherwise it may cause trouble to the sensor.

The parking assist system uses a sensor to detects obstacles and thus assist the driver in parking the vehicle, prompting the distance between the vehicle and obstacles through the multifunction display, touch screen or buzzer.

Parking assist system does not relieve you of the responsibility of paying attention. You should always observe the area around the vehicle.

Sensors

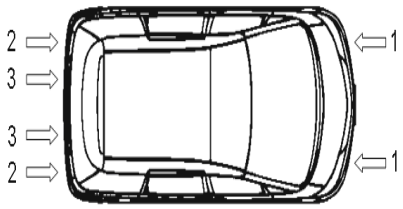

1. Front corner sensor
2. Rear corner sensor
3. Rear center sensor

Downloaded from www.Manualslib.com manuals search engine

Parking Assist Switch

The parking assist switch is located at the left bottom side of the steering wheel.

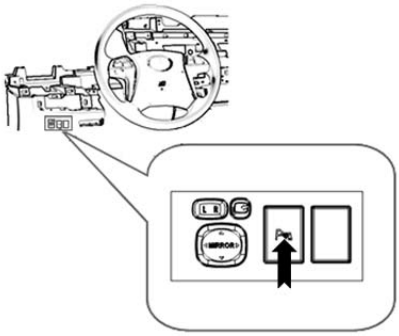

The parking assist system works if you press the switch when the Start button is at ON, and the shift lever is at P or any gear other than Neutral.

Turn on: press the switch.

The indicator on the multifunction screen comes on and the buzzer sounds once.

Turn off: press the switch again.

Display

When an obstacle is detected, an icon will be displayed on the multifunction screen and touch screen, depending on the form of the obstacle and its distance to the vehicle.

- Multifunction Display

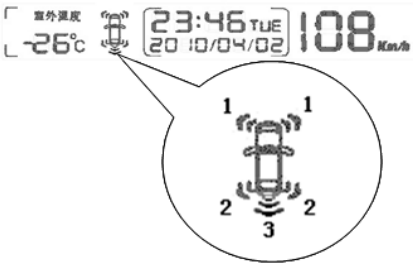

1. Front corner sensors working
2. Rear corner sensors working
3. Rear center sensors working

- Touch Screen Display (if equipped)

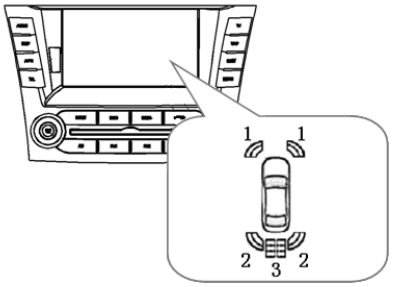

1. Front corner sensors working
2. Rear corner sensors working
3. Rear center sensors working

When an obstacle is detected, the image will be displayed automatically.

If there is no front or reversing vision signal, the image will be displayed on the full screen.

Downloaded from www.Manualslib.com manuals search engine

Parking assist system

Observe around the vehicle to ensure safety

If there is front or reversing signal, the image will be displayed on the top right corner of the screen.

Distance Display and Buzzer Warning

When an obstacle is detected, its direction and the approximate distance to the vehicle are displayed on the screen, and the buzzer will sound.

How Rear Center Sensors Work

Approximate Distance (mm)	Display		Warning Tone
1200-800			Slow
800-500			Fast
500 or less			Long beep

How Corner Sensors Work

Approximate Distance (mm)	Display		Warning Tone
600-500			Fast
500 or less			Long beep

Downloaded from www.Manualslib.com manuals search engine

Active Sensors

When the vehicle moves forward, the front corner sensors are working; when the vehicle is in reversing, all sensors are working.

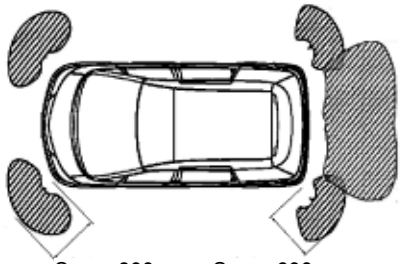

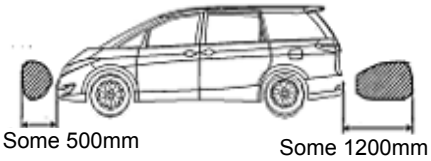

The detection range of each sensor is shown in the figure. The detection range is limited as shown in the figure above. Check the area around and drive slowly.

CAUTION

- This system is intended as an aid to assist you to park your vehicle and is not a substitute for your personal judgment. You must operate the vehicle based on your observations.
- Do not put any object on or near the operating range of the sensors. Otherwise it may cause failure of this system, or even an accident.
- In certain situations, the system will not function properly and when the vehicle approaches certain objects, the system will not detect those objects. Therefore, do not rely solely on this system and always observe the area around the vehicle.

Sensor Detection

In the following cases, this system may not work properly:

- When dirt, water or fog build up on the sensor;
- When the sensor is frozen in ice or snow;
- When the sensor is covered by any object;
- When the vehicle is apparently tilting or overloaded;
- When driving on bumpy, sloped or graveled roads or on grass;
- When the sensor is repainted;
- When a device such as a horn from another vehicle, motorcycle engine, or an air brake sound from a heavy-duty vehicle, generates ultrasonic waves near your vehicle;
- When the vehicle is close to another vehicle equipped with the parking assist system;

Downloaded from www.Manualslib.com manuals search engine

- When a towing hitch is mounted on your vehicle;
- When the bumper or sensor experience intensive striking;
- When the vehicle is approaching a high or winding road curb;
- When the vehicle is in very hot or cold weather;
- When a non-genuine suspension is installed;

In addition, the distance of certain obstacles may not be detected properly due to their particular shapes.

The sensors may not work if an obstacle is in an odd shape or made of material that does not reflect ultrasonic waves. The system may not detect the following:

- Thin objects such as a wire or rope;
- Cotton, snow or other objects that absorb ultrasonic waves;
- Objects with sharp edges or corners;
- Objects low in height, such as a curbstone;
- High objects with the top stretching out toward the vehicle;
- Objects beneath the bumper;
- Objects close to the vehicle;
- A person near the vehicle (depending on the type of clothes worn)

When the buzzer keeps sounding or when the icons appear on the multifunction display or touch screen if no obstacle is close to the vehicle, have your vehicle checked at a BYD service station.

Parking Vision System (if equipped)

The parking vision system provides real-time view around the vehicle to help you in parking.

This system works in two modes: reversing vision and front right vision.

⚠ CAUTION

- This system is designed to work together with the parking assist system and interior/exterior rearview mirrors. Don't rely entirely on this system. In narrow space, it is good have someone guide you in parking.
- You must observe around the vehicle rather than only look at the display. Your estimate of the distance to the obstacle based on the display may vary significantly with the real distance. Relying entirely on the display may cause collision with

Downloaded from www.Manualslib.com manuals search engine

a walker, obstacle or another vehicle. You must observe the area around the vehicle even if you have a parking vision system.

- Don't use this system if the rear door is not closed completely.
- After collision with another vehicle or any obstacle, there may be change in the camera location and orientation. Contact a BYD service station to check the camera location and orientation.
- Don't disassemble or modify the waterproof installation camera. Otherwise it may not work properly.
- If the ambient temperature changes quickly, this system may not work properly.
- If water, snow or mud gets on the camera, wash it with water and wipe it clean with a soft cloth. If the taint, such as oil or rubber stains, is hard to remove, please wash it with water and mild detergent, and then wipe it clean with a soft cloth.
- Don't get any organic solvent, wax, detergent or window film on the camera. In case of any stain of these matters, remove it immediately.
- You must look around the vehicle rather than rely on the display alone. When the vehicle is moving, the image may be blurred, distorted or dark, especially on a cold day. Be sure to observe the area around the vehicle and use the rearview mirrors when parking.
- Don't use the parking vision system when you turn on the turn signal lights or emergency flashers. Don't use the parking vision system when there is lights blinking nearby. A blinking light will cause unstable image on the display, and in turn affect your observation and parking, or even cause an accident.

NOTICE

In the following cases, the image may not be distinguishable even though the system is working normally:

In the dark

- If the temperature around the camera is very hot or cold;
- If the humidity is very high, or if water drops are stuck on the lens;
- If snow or mud is stuck on the lens;
- If the lens is scratched or dirty;
- If the lens is directed at a strong light source.

Downloaded from www.Manualslib.com manuals search engine

A strong point light source will be displayed as a light spot on the screen, making the surrounding objects indistinguishable.

Reversing Vision

When the Start button is at ON, set the shift lever to R position to enable the reversing vision mode.

The reversing camera installed on the rear door has a limit view angle. The objects near both ends of or under the bumper cannot be displayed in the reversing vision.

See the figure below:

Objects near both ends of the bumper

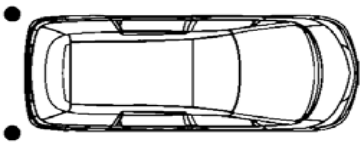

Objects under the bumper

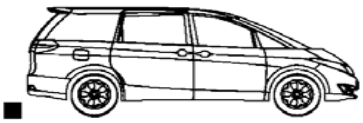

Front Right Vision

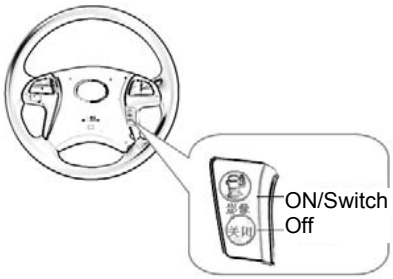

Press the Vision ON/Switch button on the steering wheel to enable the front right vision.

The floor lights will come on to provide lighting around the vehicle if the outside is dark.

To turn off the parking vision system, press the OFF button on the steering wheel.

The front right camera is installed on the right exterior rearview mirror.

The camera has a limit view angle.

The objects that is straight in front of the vehicle or to the rear right of the vehicle cannot be displayed in the front right vision.

See the figures below:

Objects straight in front of the vehicle

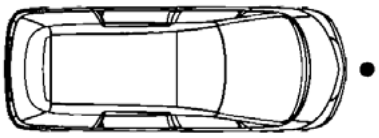

Objects to the rear right of the vehicle

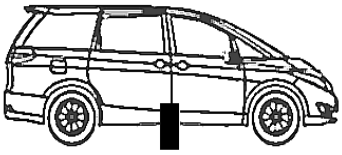

Downloaded from www.Manualslib.com manuals search engine

Parking Operation

Turn on the parking vision system when parking your vehicle.

You can use the front right vision mode if reversing is not required. Move the vehicle to the parking space while observing the area around the vehicle and looking at the parking vision display

While reversing, you can switch between the reversing vision and front right vision by operating the Vision button, so that you can see the blind corners.

The reversing camera is installed on the rear door.

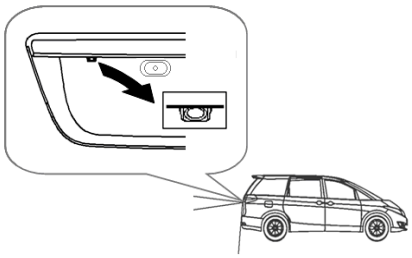

Display on touch screen

The lines are reversing safety lines.

Red: 0-0.5m

Yellow: 0.5-1.5m

Green: 1.5-2.5m

⚠ CAUTION

- The reversing safety lines serve as reference lines only for a no-load vehicle.

The front right camera is installed on the exterior right rearview mirror.

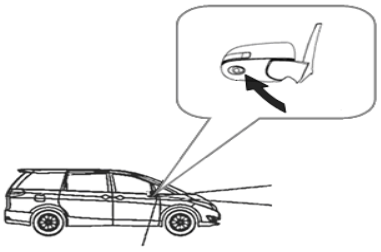

Display on touch screen

The range displayed in the vision may vary with the vehicle orientation and road conditions.

Downloaded from www.Manualslib.com manuals search engine

Don't rely alone on this system since it is intended as an aid to assist you to park your vehicle.

Always observe the area around the vehicle and make correct decisions while parking. Make sure there is sufficient space for vehicle maneuver before parking.

Cruise Control (if equipped)

The right combination switch controls the cruise.

When the power in at ON, press the cruise control master button (ON/OFF), the Cruise indicator on the instrument panel will come on.

Activating Cruise Control

1. When the power in at ON, press the cruise control master button (ON/OFF), the Cruise indicator on the instrument panel will come on.
2. Speed up the vehicle to the desired cruising speed (above 40 km/h).
3. Press the Decelerate/Set Up button (-/Set Up) on the steering wheel. The Cruise indicator on the instrument panel will come on, indicating that this function is activated.

The cruise control cannot maintain the speed on uphill/downhill roads. If you are going too fast on a downhill road, apply the brake to slow down the vehicle. However the cruise control will be cancelled. To restore to the cruising speed, press the Speed Up/Reset button (+/Reset). The Cruise indicator on the instrument panel will come on.

On an uphill road, the automatic transmission may downshift to maintain the cruising speed.

Changing Cruising speed

You can increase the preset cruising speed by any of the following operations:

- Press and hold Speed Up/Reset button (+/Reset) to increase the speed; Release the button when you reach your desired speed.
- Press down the accelerator pedal. Press the Decelerate/Set Up (-/Set Up) button when you reach your desired speed.
- To slightly increase the cruising speed, short press the Speed Up/Reset button (+/Reset) in a repeat pattern. The cruising speed increases by 1.6 km/h with each button press.

You can decrease the preset cruising speed by any of the following operations:

- Press the Decelerate/Set Up (-/Set Up) button to slow down the

Downloaded from www.Manualslib.com manuals search engine

vehicle. Release the button when you reach your desired speed.

- Slightly press down on the brake pedal, and the Cruise indicator on the instrument panel will go out. When you reach your desired speed, short press the Decelerate/Set Up (-/Set Up) button. The vehicle will maintain the desired speed.
- To slightly reduce the cruising speed, short press the Decelerate/Set Up (-/Set Up) button in a repeat pattern. The cruising speed reduces by 1.6 km/h with each button press.
- When cruise control is activated, you can still step down the accelerator pedal for overtaking. When overtaking is finished, release the accelerator pedal and the vehicle will return to the preset cruising speed.
- Resting your foot on the brake pedal will cancel the cruise control.

Canceling Cruise Control

You can cancel the cruise control by any of the following operations:

- Press down the brake pedal.
- Press the Cancel Cruise Control button (Cancel) on the steering wheel.
- Press the cruise control master button (ON/OFF) on the steering wheel.

When you press the Cancel button or slightly step down on the brake pedal, the Cruise indicator on the instrument panel goes out and the vehicle will slow down. At this time, you can operate the accelerator pedal as usual.

The system has saved the previous cruising speed. To resume the previous cruising speed, speed up the vehicle to more than 40 km/h and then short press the Speed Up/Reset button (+/Reset). The Cruise indicator comes on and the vehicle will accelerate until it reaches the previous cruising speed.

If you press the cruise control master button (ON/OFF), the system will be turned off with the saved cruising speed cleared.

Vehicle Telephone System (if equipped)

For details on the vehicle telephone system, refer to the user manuals of the vehicle multimedia system and mobile phone.

Downloaded from www.Manualslib.com manuals search engine

Downloaded from www.Manualslib.com manuals search engine

Chapter 2 Sound and A/C System

2.1 Sound System

AM/FM Radio 2-4
Electronic Clock.....2-6
Operation of USB / AUX Interface (if equipped) 2-7
Play a CD 2-7
Steering Wheel Control of Sound System (if equipped) 2-10

Downloaded from www.Manualslib.com manuals search engine

Sound System (if equipped)

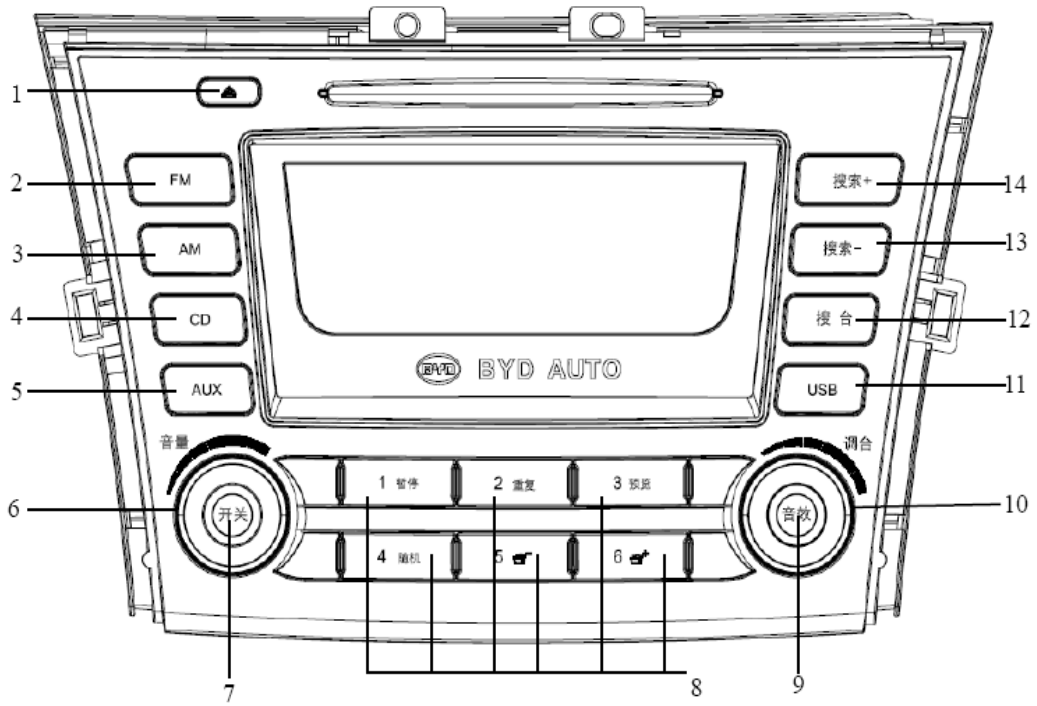

1 Eject
2 FM
3 AM
4 CD
5 AUX
6 Volume adjustment
7 Power
8 Presetting
9 Sound effect adjustment
10 Manual tuning
11 USB
12 Scan
13 Seek-
14 Seek+

Sound System 2-2

Downloaded from www.Manualslib.com manuals search engine

Multimedia System (if equipped)

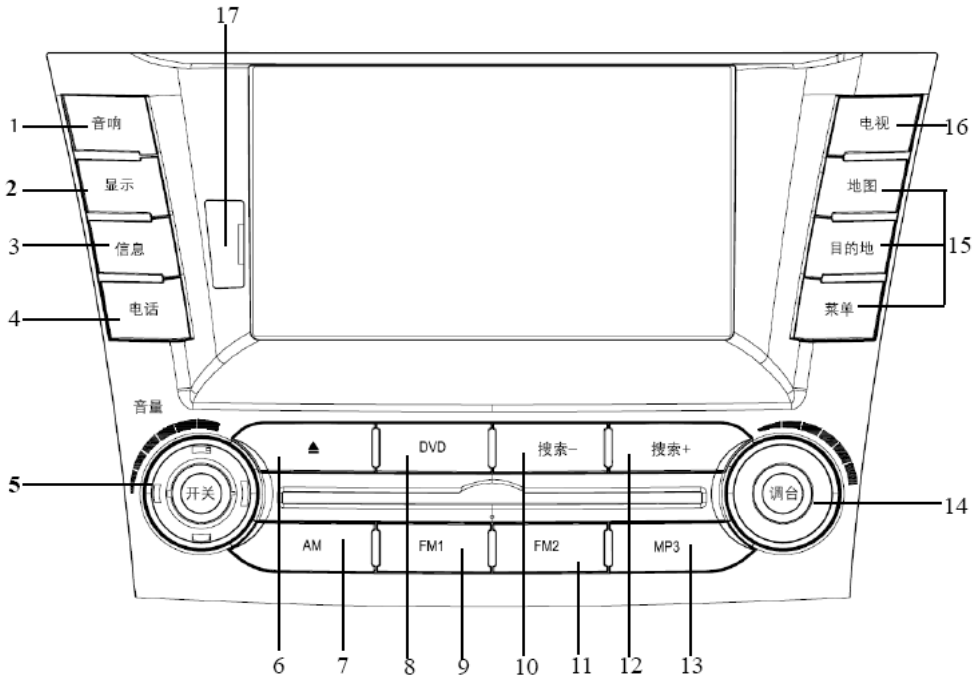

1. Sound main menu
2. Picture quality adjustment
3. Product information
4. Cell phone
5. Power/volume
6. Eject
7. AM
8. DVD
9. FM1
10. Seek-
11. FM2
12. Seek+
13. Cell phone MP3
14. Manual scanning
15. Navigation
16. TV
17. Navigation map card

Downloaded from www.Manualslib.com manuals search engine

AM/FM Radio

Sound system on the vehicle allows you to listen to AM/FM radio. You can save your favorite radio stations with the number presetting buttons.

Radio Operation

You can operate the sound system only when the ignition switch is at ACC (I) or ON (II).

Press Power/Volume and AM/FM button to turn on the radio system. Turn Power/Volume button to adjust the volume.

The last received radio waveband will be displayed. Press AM or FM button to change the waveband. Press FM button repeatedly to switch between FM1, FM2 and FM3. Press AM button repeatedly to switch between AM1 and AM2.

When you are listening to stereo radio, ST will be displayed on the screen. When the radio signal is weak, ST will flicker on the screen.

Select Radio Station

Five ways are available for you to search radio station on the selected waveband: manual scanning, auto scanning, scanning with preview, auto scanning and saving, or number presetting button.

Manual scanning

You can use manual scanning knob to search for radio stations. Rotate it clockwise to go to high frequency, and anticlockwise to low frequency. Stop the knob when the display shows you have reached you desired frequency.

Auto scanning

Auto scanning can automatically search for the radio station with strong signal on a certain waveband. Press Seek- or Seek+ to enable this function. The radio system will search for the next or previous radio station starting from the current frequency. The seeking will stop when it reaches a radio station with strong signal.

Scanning with preview

This function will play all the saved radio stations on all wavebands for previewing. Press Scan to enable this function. SCAN will be displayed on the screen. The radio will go to the first preset station and play for some 5 seconds. If you do not make any operation, it will go on to the next preset station. When you reach your desired station, press Scan to stop scanning.

Presetting

You can save your favorite radio stations on six number presetting buttons. Each number button from 1-6 can save two frequencies on AM waveband (AM1, AM2) and three frequencies on FM waveband (FM1,

Downloaded from www.Manualslib.com manuals search engine

FM2, FM3).

Save a radio station in the following steps:

1. Select an AM/FM waveband.
2. Use manual scanning, auto scanning or scanning with preview to reach your desired radio station.
3. Select a presetting button (1-6) on which you want to save the radio station, and press it for 2 seconds to save the current radio station to the presetting button.
4. You can save 12 AM radio stations and 18 FM radio stations by repeating step 1-3 above.

Once a radio station is saved, you can listen to it by simply pressing the corresponding number button.

If the battery on the vehicle is depleted or disconnected, or if the radio fuse is removed, all preset radio stations will be cancelled.

Auto scanning and saving

Long press Scan for 2 seconds, the system will search for radio stations with strong signal and respectively save them to FM1, FM2, FM3 or AM1, AM2. To turn on this function, long press the Auto Scanning and Saving (Scan) button. SCAN will be displayed on the screen and flickers at 1 Hz. You can save 12 AM radio stations and 18 FM radio stations on number keys (1-6). And you can listen to the saved radio channels through the number keys (1-6). You can also overwrite the radio stations previously saved in the number keys. The procedure to overwrite a radio station is the same with that of saving a radio station to a number key.

Adjust Volume

Bass, treble, balance and fader are adjustable. Press the sound effect adjustment button (AUDIO) to select your desired mode. The mode will switch between bass (BAS), treble (TRE), balance (BAL) and fader (FAD) in turn when you press the AUDIO button repeatedly. After one circle, press AUDIO button and the screen will return to the current mode. When the mode is changed, the mode name will be displayed on the screen.

Balance/Fader

These two modes can adjust the sound intensity of each speaker. Use Balance to adjust balance between the left and right speakers, and use Fader to adjust balance between the front and rear speakers.

Press AUDIO button to select Balance or Fader mode.

Turn the volume knob to adjust

Downloaded from www.Manualslib.com manuals search engine

Balance or Fader to your desired level. The current setting is displayed in numbers.

Treble/Bass

These two mode can adjust the timbre.

Press AUDIO button to select TRE or BAS mode.

Turn the volume knob to adjust the timbre to your desired level. The current setting is displayed in numbers.

If there is no operation on the volume knob for 3 seconds, the system will return to the selected sound mode.

Electronic Clock

When the ignition switch is at ACC or ON, the clock is displayed on the sound system screen. To set up the clock, long press AUDIO (Clock) button for 2 seconds, when you hear a prompt tone, the system enters the clock setup mode. Press the H end (presetting 4) of the strip button until the hour value reaches the current time; press the M end (presetting 5) until the minute value reaches the current time.

Under clock setup mode, press R end (presetting 6) to quickly set up the clock to the beginning of the next or previous hour. If the minute value is within 30, the hour value will be set to the previous hour. If the minute value is above 30, the hour value will be set to the next hour.

For example:

1:06 will be set to 1:00.

1:52 will be set to 2:00.

If the clock on a new vehicle is not set up, or after the battery is disconnected or depleted, the time display will flicker to remind you to set up the clock.

Downloaded from www.Manualslib.com manuals search engine

Operation of USB / AUX Interface (if equipped)

This system can play music files in the speakers, including MP3/WMA files on an external USB disk, and audio signals input through AUX interface.

When you insert a USB device, the system will switch to USB mode and detect music files. If any is detected, it starts playing music. The operations for music on a CD are also available for USB/AUX music, including play/pause, previous/next, fast forward/fast rewind.

Using a data cable, you can connect the system to the earphone port or AUX interface of an external music player, such as a MP3 player, so that you can play the music in the car speakers.

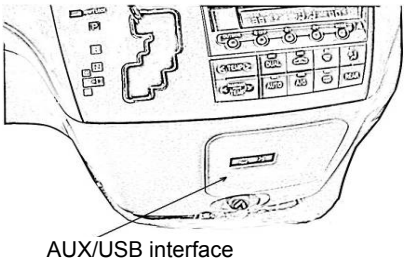

AUX/USB interface

NOTICE

- To prevent damage to USB devices, it is recommended to use the data cable supplied with the vehicle for connection.
- USB cannot support certain USB devices due to compatibility and capacity issues.

Play a CD

When playing a CD disc, the ignition switch shall be at ACC (I) or ON (II).

The CD disc can be operated with the controller used for the radio operation.

Press CD button to select the CD player. When playing a CD, the screen will show CD and the track number. The system will continue to play the CD until you change the mode.

Insert a CD partway into the slot, label side up. The drive will pull it in and begin to play music. When all music on the CD is played, the system will replay the CD from the first track.

Downloaded from www.Manualslib.com manuals search engine

NOTICE

- Do not add any label to a CD. The label may peel off and damage the player.
- Do not insert an 8 cm (3 inch) disc in the CD player. Only use standard CD discs. CD of any other size may be jammed in the drive or cause other troubles.
- Do not get the sound system wet.
- Do not insert any thing other than a standard CD disc into the CD player.
- The speakers may make noise when there is mobile communication equipment in use nearby.

For better audio performance, only use high quality CD disc with a "For Use of Sound System" mark.

CD player cannot play a CD-RW disc.

When playing a disc, press the AM/FM button to switch to radio mode. Press the CD button to switch to CD mode again, resuming playing from the position where you stopped.

When playing a CD, if you turn off the sound system through the PWR/VOL knob or ignition switch, the disc will be left in the drive. When you turn on the CD player again, the playing will be resumed from the position where you stopped. Press the Eject button to eject the CD disc from the drive.

If you do not take out the disc in 10 seconds, the CD will be pulled in again. Press the CD button to play the disc.

When playing a CD, you can select or change music track with the Auto Scanning/Skipping button (SEEK).

When playing a music track, long press SEEK+/SEEK- buttons to go fast forward/backward. Long press SEEK+ button for fast forward, long press SEEK- for fast backward. Release the button to resume playing when reaching the desired position. Press SEEK+ button to skip forward to the next track. Press SEEK- button to replay the current track. Press SEEK- twice to skip backward to the previous track.

When playing a CD, you can operate such functions as REPEAT, RANDOM PLAY and SCAN.

SCAN

When enabling SCAN, the system will preview all music tracks in turn. To enable this function, press the number key 3 in CD mode. SCAN will be displayed on the screen. The system will play the first track for some 10 seconds. If you do not make any operation, it will go on to play the other tracks for some 10 seconds in turn. When reaching your desired track, press the number key 3 again

Downloaded from www.Manualslib.com manuals search engine

to resume playing.

Repeat

To enable this function, press the number key 2 in CD mode. RPT will be displayed on the screen as a prompt. The system will play the current track repeatedly. Press the number key 2 again to cancel this function.

Random Play

This function will play all tracks on a CD in random, rather than sequential, order. To enable this function, press the number key 4 in CD mode. RDM will be displayed on the screen. The music will be played in random order. Press the number key 4 again to exit the Random Play mode.

CD Maintenance

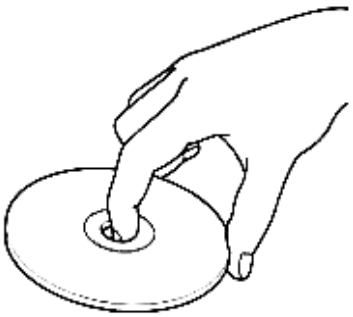

Hold a CD by the edge. Do not touch its surfaces. Do not attach any stabilizing ring or sticker on a CD disc. Prevent a CD from being stained by fingerprints or ink, or the CD may be jammed in the drive or may not be played normally.

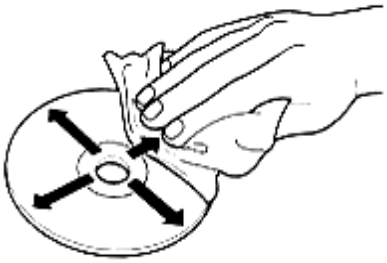

When not in use, keep CD discs in a box to avoid dust or other stains. To avoid deformation, keep CD discs away from direct sunlight or overheat.

Clean a CD disc with a piece of clean and soft cloth. Wipe the disc outward from the center.

Downloaded from www.Manualslib.com manuals search engine

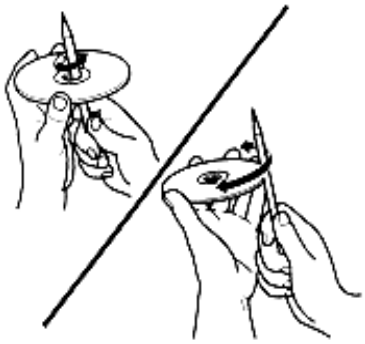

The inner and outer edges of a new CD may have burrs. The burrs may fall off in the CD drive, which may cause track skipping or other troubles. Rub the CD edges with the side of a pen or pencil to remove the burrs.

Do not let any foreign matters enter the CD drive.

Steering Wheel Control of Sound System (if equipped)

There are 3 buttons on the left of the steering wheel hub for setting the sound system. You can operate the basic functions of the sound system without getting your hands away from the steering wheel.

Use volume buttons "+" and "-" to adjust the volume. Press and hold a volume button until you get the desired volume level.

Use Mode button to change the function mode. Press the button repeatedly to switch between FM, AM, CD playing (if a CD is loaded), MP3 playing (if .mp3 files are available through the USB interface) and audio playing (if an external player is connected to the AUX interface).

The channel buttons "∨" and "∧" have the same functions as SEEK+ and SEEK-. When listening to radio, press ∧ to search for the next radio station with strong signal, press ∨ to search for the previous radio station with strong signal.

If you are playing a CD or files on a USB device, press ∧ to skip to the next track; press ∨ to restart the current track; press ∨ twice to skip to the previous track. The album name and track number will be displayed on the screen.

In AUX playing, the channel buttons do not function.

Downloaded from www.Manualslib.com manuals search engine

Chapter 2 Sound and A/C System

2.2. Air Conditioning (A/C) System

Front A/C System 2-12
Rear A/C System.....2-24

Downloaded from www.Manualslib.com manuals search engine

Front A/C System

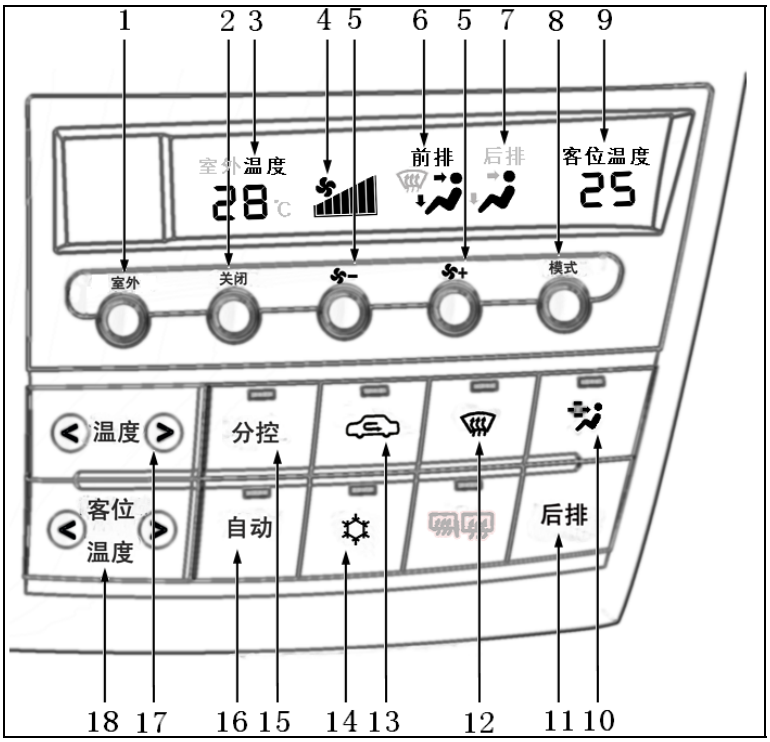

1. Outside Button
2. OFF Button
3. Driver's Side/Outside Temperature (°C)
4. Fan Speed Display
5. Fan Speed Regulating button
6. Front A/C Air Delivery Mode Display
7. Rear A/C Air Delivery Mode Display
8. Mode Button (air delivery mode selection)
9. Front Passenger Side/Rear Temperature (°C)
10. Pollen Removal Mode Button
11. Rear Seats Button
12. Front Defroster Button
13. Air Intake Mode Selection Button
14. Button
15. Separate Control Button
16. AUTO Button
17. Temperature Button
18. Front Passenger/Temperature Button

Downloaded from www.Manualslib.com manuals search engine

Control Operation

AUTO button

Press AUTO button for automatic A/C operation. The indicator will turn on indicating that A/C system is on automatic mode.

The A/C system will automatically turn on/off and select appropriate fan speed and air delivery mode.

If you press any manual control button in AUTO mode, the corresponding parameter will be set up while the other parameters remain under automatic control.

- When the temperature is set to the lower limit (LO)/upper limit (HI), the A/C system will operate under full cooling/heating mode, disabling the AUTO mode.

When the temperature is set to anywhere between the LO and HI, the A/C system can control the inside temperature under AUTO mode.

You can set up the temperature with manual control.

OFF button

Press the OFF button to turn off the A/C system.

1 Low speed 2 High speed

SPEED REGULATING Button

Press an appropriate fan speed regulating button to set up the fan speed: the higher the fan speed, the more air will be cooled. Press the + or – button to increase or reduce the fan speed.

Press OFF button to turn off the fan.

To eliminate the frost or fog on the inside of windshield, set the fan to high speed.

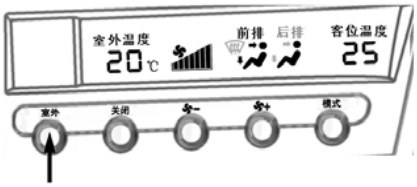

Downloaded from www.Manualslib.com manuals search engine

Outside Button

If you press the Outside button, the outside temperature will be displayed on screen at the driver's side.

Press the Outside button again to display the temperature setting.

You can also press the Temperature button to turn off the outside temperature display.

Separate Control Button

You can use this button to separately control the temperature at the driver and front passenger side.

You can switch between separate mode and associated mode.

- **Separate mode:** temperature is selected separately for the driver and front passenger. The indicator will turn on when selecting the Separate mode;
- **Associated mode:** the temperature at the driver and front passenger sides are set to the same. The indicator will go out under associated mode.

Under associated mode, when you press the temperature control button for the front passenger side, the A/C system will switch to separate mode.

Temperature Button

Under separate mode, use this button to adjust the temperature of the driver side.

Under associated mode, use this button to adjust the temperature for both the driver and front passenger.

Press 〈 to reduce the temperature, press 〉 to increase the temperature.

When the temperature reaches the lower limit, LO will appear on the screen; when it reaches the upper limit, HI will appear on the screen.

FRONT PASSENGER/Temperature Button

Under separate mode, use this button to adjust the temperature of the front passenger side.

Under rear mode, use this button to adjust the temperature of rear seats.

Press 〈 to reduce the temperature, press 〉 to increase the temperature.

Downloaded from www.Manualslib.com manuals search engine

When the temperature reaches the lower limit, LO will appear on the screen; when it reaches the upper limit, HI will appear on the screen.

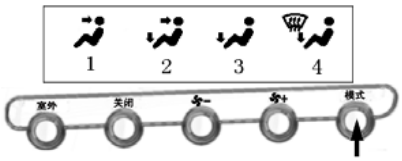

Mode Button

Press Mode button to select an air delivery mode.

Under AUTO mode, do not operate this button unless you want to change the air delivery mode.

1. - This mode directs air to the instrument panel outlets.

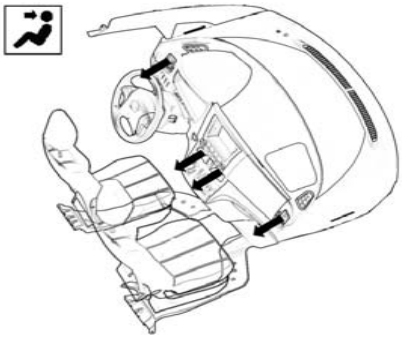

2. - This mode directs half of the air to the instrument panel outlets and the remaining air to the floor outlets.

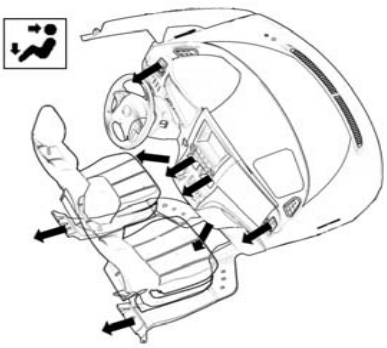

Downloaded from www.Manualslib.com manuals search engine

3. - This mode directs most of the air to the floor outlets.

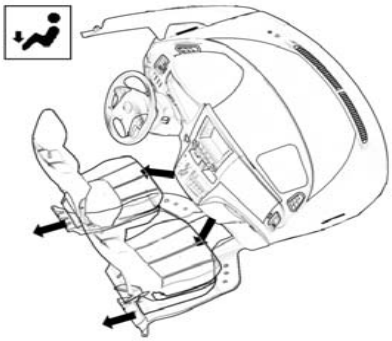

4. - This mode directs most of the air to the floor outlets and front windshield.

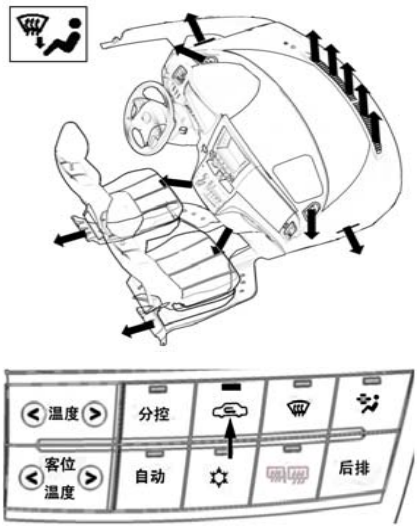

AIR INTAKE Mode SELECTION Button

1. Interior circulation – the air inside the vehicle will be recirculated.

2. Exterior circulation – this mode will draw air from outside for circulation.

Press this button, the green indicator will turn on, indicating the air intake mode is at interior circulation; press this button again, the green indicator will go out, indicating the air intake mode is at exterior circulation.

Button

Press button to turn on the A/C compressor, and the indicator will turn on. Press the button again to turn off the compressor.

Downloaded from www.Manualslib.com manuals search engine

Under AUTO mode, the button is at off by default with the indicator remaining off, but the compressor is under automatic control.

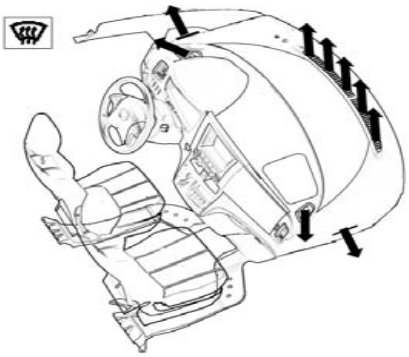

Front Defroster Button

When you press this button, the indicator on it will turn on and most of the air will be directed to the windshield. Press this button again, the indicator will go out and system will return to the previous air delivery mode.

Press this button to turn on the defroster and A/C system. That is, no matter whether the button is pressed, its indicator will turn on and the front view will become clear quickly.

Pollen Removal Mode button

The vehicle has pollen removal function. When enabling this mode, the wind from the air outlets will blow away pollen for the driver and front passenger.

Press the Pollen Removal Mode button, its indicator and the indicator on the button will turn on; at this time the A/C system is at interior circulation mode and most of the air is directed to the instrument panel outlets.

Press this button again, the pollen removal function will be turned off with the indicators going out.

Downloaded from www.Manualslib.com manuals search engine

Rear Seats Button

Press Rear Seats button to change the A/C control mode between the FRONT and REAR mode.

You can press this button to adjust the rear A/C system on the front A/C control panel. Rear Seats will be displayed on the screen of the front A/C control panel.

Press this button to return to the front A/C control mode. FRONT SEATS will be displayed on the screen.

If you do not make any operation in 5 seconds after switching to the rear A/C control mode, the system will return to the previous A/C control mode.

When the front A/C system is turned off, the dehumidification and cooling functions are disabled on the rear A/C system.

Operation Tips

- To quickly cool down the vehicle after it is exposed to intensive sunlight, you can drive for a few minutes with the windows open. The A/C system can cool down the vehicle faster when the hot air is discharged.
- Make sure the air intake grid in the front of the windshield is not blocked by such matters as leaves or snow.
- When the weather is damp, do not let the cool air blow to the windshield; otherwise fogging may appear von the windshield due to the temperature difference between the inside and outside.
- Keep the air flowing freely under the front seats so that the air circulation inside the vehicle is sufficient.
- When the weather is cold, to prevent fogging on the windows, you can run the fan on high speed for one minute in order to remove the snow or moisture in the air intake channel.
- When the air outside the vehicle is dusty, all windows must be closed. If the air entering the vehicle is still dusty, set the A/C air intake mode to interior circulation and set the fan speed to any value other than 0.

Downloaded from www.Manualslib.com manuals search engine

Heating

For better heating performance, make the following settings on the A/C control panel:

Automatic operation:

Press AUTO button Temperature – set to your desired temperature Air intake mode – exterior circulation (outside air) A/C - OFF

Manual operation:

Fan speed – set to your desired speed Temperature – set to a high temperature (red area) Air intake mode – exterior circulation (outside air) Air delivery mode - A/C - OFF

- To warm up the vehicle quickly, enable the interior circulation for a few minutes. To prevent fogging on the windows, use exterior circulation for air intake after the inside is warmed up.
- When heating up, press A/C button to reduce moisture in the air.
- To heat up the inside during defogging or defrosting, set the air delivery mode to .

A/C

For better heating performance, make the following settings on the A/C control panel:

Automatic operation:

Press AUTO button Temperature – set to your desired temperature Air intake mode – exterior circulation (outside air) A/C - ON

Manual operation:

Fan speed – set to your desired speed Temperature – set to a low temperature Air intake mode – exterior circulation (outside air) Air delivery mode - A/C - ON

Downloaded from www.Manualslib.com manuals search engine

- To cool down the vehicle quickly, turn the temperature control knob to the lower limit and enable the interior circulation for a few minutes.

Ventilation

For better heating performance, make the following settings on the A/C control panel:

Automatic operation:

Press AUTO button

Temperature – set to a low temperature

Air intake mode – exterior circulation (outside air)

A/C - OFF

Manual operation:

Fan speed – set to your desired speed

Temperature – set to a low temperature

Air intake mode – exterior circulation (outside air)

Air delivery mode -

A/C - OFF

Defogging and Defrosting

- Inside of Windshield

For better heating performance, make the following settings on the A/C control panel:

Automatic operation:

Temperature –

set to a high temperature (heating up)

set to a low temperature (cooling down)

Air intake mode – exterior circulation (outside air)

Air delivery mode -

Manual operation:

Fan speed – set to your desired speed

Temperature –

set to a high temperature (heating up)

set to a low temperature (cooling down)

Air intake mode – exterior circulation (outside air)

Air delivery mode -

Downloaded from www.Manualslib.com manuals search engine

Press button, most of the air is directed to the windshield outlets.

You can use the defogging function to clear fog from the windshield.

Press button to turn on the defogging and A/C system. That is, no matter whether the A/C button is pressed down, its indicator will turn on and the front view will become clear quickly.

Press button again, the system will return to the previous air delivery mode.

- When the weather is damp, do not let the cool air blow to the windshield. It will make the fog thicker due to the temperature difference between the inside and outside.

- Outside of Windshield

For better heating performance, make the following settings on the A/C control panel:

Automatic operation:

Temperature – set to a high temperature Air intake mode – exterior circulation (outside air) Air delivery mode -

Manual operation:

Fan speed – set to your desired speed Temperature – set to a high temperature Air intake mode – exterior circulation (outside air) Air delivery mode -

Press button, most of the air is directed to the windshield outlets.

You can use the defogging function to clear fog from the windshield.

Press button to turn on the defogging and A/C system. That is, no matter whether the A/C button is pressed down, its indicator will turn on and the front view will become clear quickly.

Press button again, the system will return to the previous air delivery mode.

- To heat up the inside during defogging or defrosting, set the air delivery mode to .

Press the windshield air outlet button to turn on the defrosting and A/C system. That is, no matter whether button is pressed down, its indicator will turn on and the front view will become clear quickly.

Press this button again, the system will return to the previous air delivery mode.

Downloaded from www.Manualslib.com manuals search engine

To heat up the inside during windshield defrosting, you can select the air delivery mode of floor and windshield.

Side and Roof Outlets

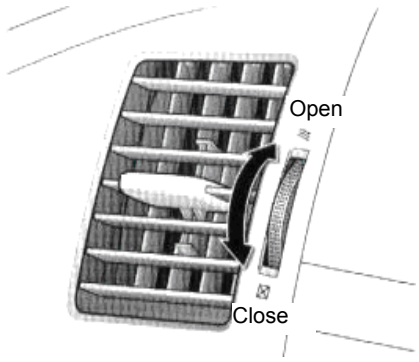

Side Outlet

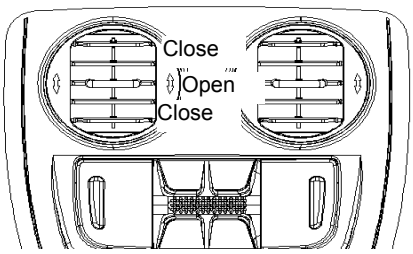

Roof Outlet

All air outlets are adjustable. If the air flow control is bad, check the side and roof outlets.

You can open/close the side outlets in the method as shown in the figure above. To adjust the air flow direction of the roof outlets, you can use the control lever to regulate the outlet orientation, and then adjust the outlet deflectors.

If the outside temperature is low, the air flow from the side and roof outlets will remain cold until the engine coolant is heated up sufficiently.

When the air flow temperature is not satisfactory, you can use the control lever to change the air flow direction. When the outlets are blocked, the air flow temperature may also be cold.

Check and Replace A/C Filter

The A/C filter can prevent dusts from entering the vehicle through the A/C vents.

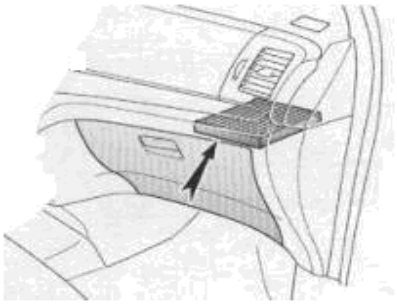

The filter is installed behind the glove box.

The filter may be jammed after

Downloaded from www.Manualslib.com manuals search engine

running for a long time. When efficiency of the A/C and heater drops sharply, or when window fogging occurs easily under the exterior circulation mode, check whether the filter must be replaced.

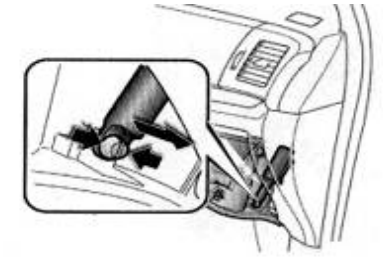

1. Open the glove box and pull off the damper, as shown in the figure above.

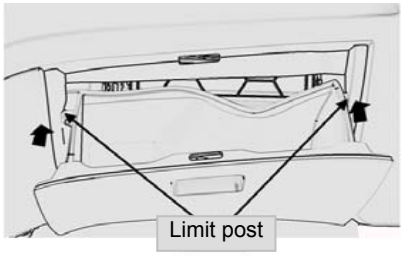

2. Lift up the glove box in the direction of the arrows to remove the glove box. Pay attention to the limit posts on both sides.

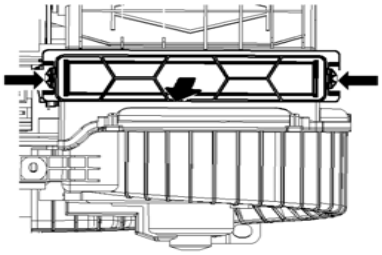

3. Press the latches on both sides to release them, and then pull out the filter.

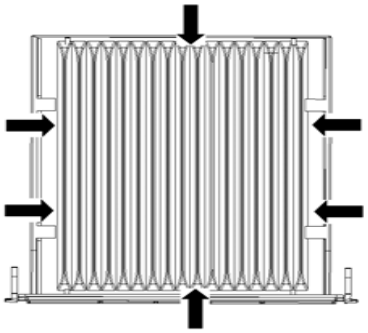

4. Compress the filter toward the center, and take out the filter from the bracket.

5. When the filter is dirty, you can clean it by blowing compressed air from the rear side. Install the filter to check whether it functions normally; if not, replace the filter.

6. When installing the filter, pay attention to hold it in the bracket, preventing it from dropping off.

Downloaded from www.Manualslib.com manuals search engine

Rear A/C System

Controller – GLX-i, GS-i, GLX-iNAVI

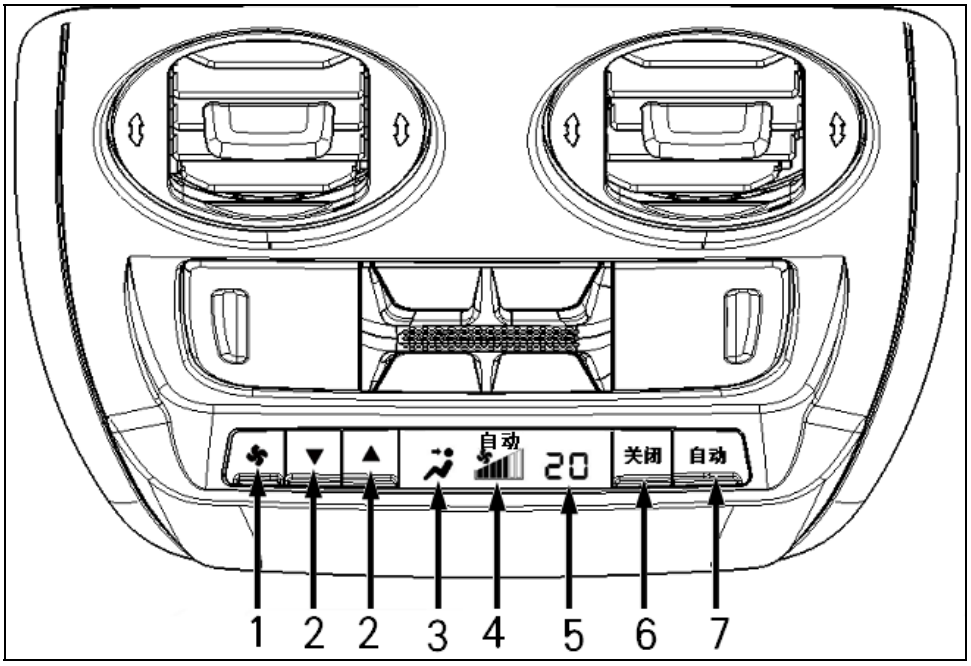

1. Fan Speed Regulating Button
2. Temperature Control Button
3. Rear A/C Air Delivery Mode Display
4. Fan Speed Display
5. Rear Temperature Display (°C)
6. OFF Button
7. AUTO Button

Downloaded from www.Manualslib.com manuals search engine

AUTO Button

Press AUTO button to enable automatic A/C operation. At this time, AUTO will be displayed on the screen of the rear A/C control panel. When the Rear A/C mode is enabled on the front A/C control panel, the AUTO button indicator on the front A/C control panel turns on. The A/C system will automatically select appropriate fan speed and air delivery mode according to the temperature.

You can also set up the temperature with manual control.

Press fan speed regulating button to exit the AUTO mode.

OFF Button

Press the OFF button to turn off the rear A/C system.

Fan Speed Regulating Button

Press the Fan Speed Regulating button to turn on the A/C. Press the Fan Speed Regulating button repeatedly to adjust the air flow from level 1 to level 7 in a circular pattern.

Lower temperature Higher temperature

Temperature Regulating Button

Press ▲ button to increase the temperature, press ▼ to reduce the temperature. When the temperature reaches the lower limit, LO will appear on the screen; when it reaches the upper limit, HI will appear on the screen.

Downloaded from www.Manualslib.com manuals search engine

Controller – G-i, GL-I

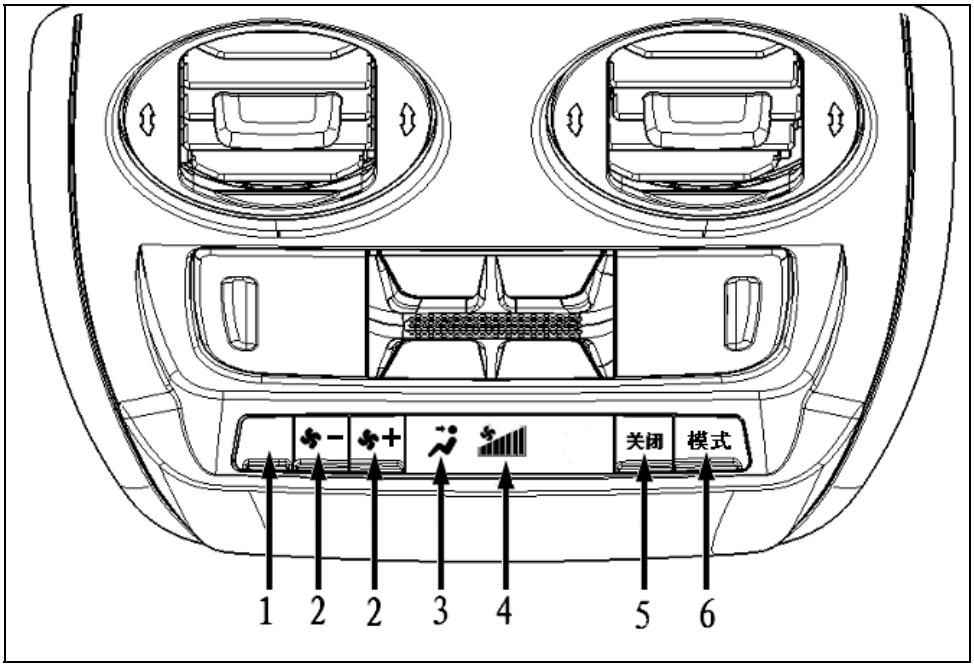

1. Null Button
2. Fan Speed Regulating Button
3. Rear A/C Air Delivery Mode Display
4. Fan Speed Display
5. OFF Button
6. Mode Button

Downloaded from www.Manualslib.com manuals search engine

Low speed High speed

Fan Speed Regulating Button

Press an appropriate fan speed regulating button to set up the fan speed: the higher the fan speed, the more air will be cooled. Press the + or – button to increase or reduce the fan speed.

Press OFF button to turn off the fan.

OFF Button

Press the OFF button to turn off the rear A/C system.

Mode Button

Press Mode button to select an air delivery mode.

1. - Most of the air is directed to the roof outlets.

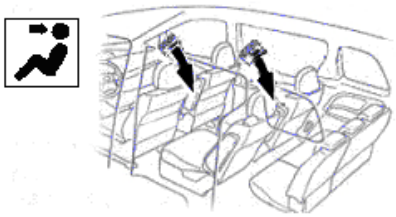

2. - Most of the air is directed to the side outlets.

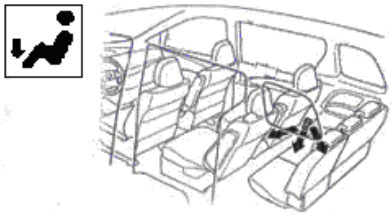

Downloaded from www.Manualslib.com manuals search engine

Downloaded from www.Manualslib.com manuals search engine

Chapter 3 Before Driving

Running-in Period....3-2
Fuel....3-2
Three-way Catalytic Converter....3-3
Engine Exhaust Warning....3-4
Brake System....3-5
ABS Warning Indicator....3-6
Brake Pad Wear Warning Indicator....3-7
Storage of Luggage....3-8

Downloaded from www.Manualslib.com manuals search engine

Running-in Period

Avoid hard driving. Do not drive at high speed.

BYD M6 does not have complex running-in procedure. However, do follow the simple tips below to save fuel and extend the service life of the vehicle.

- Do not press the accelerator pedal to the bottom.
- Do not let the engine overspeed.
- Avoid hard braking in the first 300 kilometers.
- Do not drive the vehicle at the same speed for a long time.

Fuel

Choose the appropriate fuel for the engine.

Inappropriate fuel can damage the emission control devices and the engine. It will also increase the air pollution.

Fuel Type

Only use unleaded gasoline.

NOTICE

- Do not use leaded gasoline. It could cause malfunction of three-way catalytic converter and emission control devices, and increase the maintenance expense.

Octane number must be #93 or above.

Gasoline with lower octane rating could cause persistent engine knock. Heavy knock can lead to engine damage.

In Case of Knock

If you are using gasoline rated at 93 octane or higher and you hear heavy knocking, or if you hear regular knocking when you are driving at a stable speed on a flat, level road, contact a BYD service station to service the engine.

However, it is normal to hear slight knocking for a short time upon acceleration or going uphill.

Fuel Tank Capacity

65L

For fuel economy and normal operation, don't drive the vehicle with a full or empty fuel tank.

Downloaded from www.Manualslib.com manuals search engine

Three-way Catalytic Converter

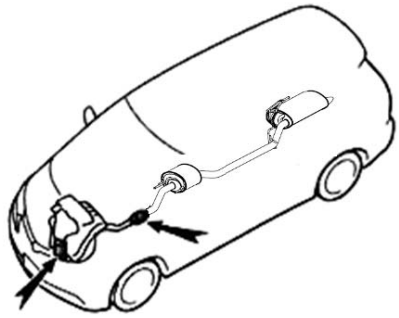

Three-way catalytic converter is a device installed in the exhaust system to control emissions.

It can reduce harmful pollutants in the exhaust gas.

To guarantee compliance with specifications on emission limits of light-duty vehicles (such as GB18352.3-2005), you are recommended to use low sulphur fuel meeting the applicable local standards.

CAUTION

- When the engine is running, keep all personnel and inflammables away from the exhaust pipe. The hot exhaust gas may cause fire or burn injury.
- Avoid driving on the ground covered by inflammables, such as grass, leaves, paper or cloth. Do not park or idle the vehicle on such ground.

NOTICE

Large quantity of unburned fuel entering the catalytic converter may lead to overheating and fire in the catalytic converter. To prevent these problems and other risks, strictly follow the instructions below:

- Only use unleaded gasoline.
- Don't drive the vehicle with low fuel level. Insufficient fuel may lead to misfire in the engine and overload the three-way catalytic converter.
- Don't let the engine idle for more than 20 minutes.
- Don't let the engine overspeed.
- Don't start the engine by towing or pushing the vehicle.
- Don't turn off the ignition switch in driving.
- Always keep the engine in good conditions. Malfunction in the electric system, electronic

Downloaded from www.Manualslib.com manuals search engine

ignition system, distributor ignition system or fuel supply system could cause overheating of the three-way catalytic converter.

- If the engine has trouble in starting or stalls frequently, your vehicle needs service.
- To ensure normal operation of the three-way catalytic converter and the whole emission control system, regularly check the vehicle according to BYD M6 Maintenance Schedule.

Engine Exhaust Warning

CAUTION

- Avoid breathing in the exhaust gas, since the colorless, odorless carbon monoxide in the exhaust can cause you to lose consciousness and even die.
- Make sure the exhaust system is free of leakage or loose connection. Check the exhaust system regularly. After a vehicle collision or in case of a change in the exhaust noise, check the exhaust system immediately.
- Don't run the engine in an enclosed space such as garage except entering/exiting such space. High concentration of exhaust gas is dangerous.
- Don't stay in the vehicle for a long time when it is parked with the engine running. If you have to, park the vehicle in open space and adjust A/C system to forcibly take fresh air into the vehicle.
- Before driving, close the rear door to prevent exhaust gas from entering the vehicle.
- Make sure the air intake grid in the front of the windshield is not blocked by such matters as leaves or snow.
- If you smell exhaust gas in the car, immediately open the windows to let fresh air enter the vehicle. It may be the result of a leak in the exhaust system and needs to be serviced immediately. Exhaust inside the passenger compartment can be very dangerous as it contains toxic gases.

Downloaded from www.Manualslib.com manuals search engine

Brake System

The tandem master cylinder is essentially two separate master cylinders combined into one unit, providing two individual hydraulic circuits. In case that one circuit fails, the other can still function normally. But at this time, you will get a harder brake pedal and longer braking distance. And the braking system indicator comes on too.

CAUTION

- Don't drive the vehicle with one braking circuit failed. Repair the failed braking system immediately.

Vacuum Booster

The vacuum booster uses engine vacuum to provide power assist in braking. If the engine stalls while driving, you can step down the brake pedal with normal pressure.

CAUTION

- Don't press the brake pedal if the engine stalls. The vacuum pressure decreases with each action of the brake pedal.
- Even if the brake booster cannot provide power assist, the brake system can still work. But at this time, you will get a harder brake pedal and longer braking distance.

Anti-lock Brake System

Anti-lock Brake System (ABS) is designed to help prevent the wheels from ceasing rotation, therefore avoiding braking skid. It can improve the steering stability in hard braking and on slippery road surface.

How to Press ABS Brake Pedal

When the ABS functions, you may feel a slight brake pedal pulsation or notice some noise. Just hold the brake pedal down firmly and let the anti-lock system work for you. Don't step down the brake pedal repeatedly in hard braking. This may reduce the braking performance.

On rainy days, the ABS system will activate on slippery road surface such as a bridge steel plate and well cover.

When you start the engine or begin to drive away, you may hear momentary motor or clicking noise in the engine compartment. This is normal as the noise indicates the ABS system is in self-checking.

The followings may occur when ABS is working. They don't indicate that the ABS is malfunctioning.

- You can hear the working noise of the ABS system, and feel a pulsation in the brake pedal and vibration in the steering wheel and vehicle body. You may even hear motor noise after the vehicle stops.

Downloaded from www.Manualslib.com manuals search engine

- When the ABS operation is completed, the brake pedal may move forward slightly.

⚠ CAUTION

- Don't get too close to the vehicle in front of you. Even although the ABS system can help you maintain steering control, the vehicle stability and steering performance will deteriorate.
- When you drive at high speed on rainy days, if the tires' driving force exceeds the limit or if the wheels are spinning, the ABS system cannot help you control the vehicle.
- ABS cannot always reduce the braking distance. Always leave enough room up ahead to stop. Under the following conditions, a longer braking distance may be required compared to a vehicle without ABS:
- In gravel, sand and deep snow;
- When snow chains are mounted on the tires;
- On a stepped road, such as the junction of roads;
- On a rough road with pits or uneven pavement.
- All four tires must have the specified size and tire pressure. ABS monitors the rotational speed of each wheel through a speed sensor. Tires with different size than the original may affect the detection of wheel speed and increase the braking distance.

ABS Warning Indicator

When the ignition switch is at ON, this indicator comes on. If the ABS system and brake assist system are working normally, it will go out in several seconds. The indicator will come on if an error occurs in the ABS system.

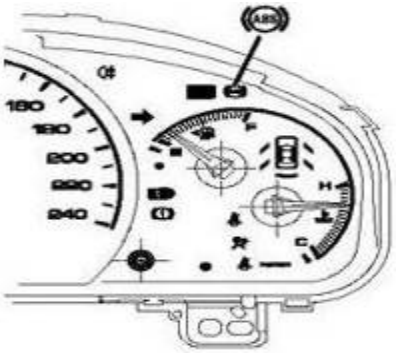

When the (ABS) warning indicator stays on and the braking system indicator remains off, the ABS system, traction control system and stabilization control system are not working normally. However, the

Downloaded from www.Manualslib.com manuals search engine

conventional brake system still works normally.

When the (ABS) warning indicator stays on and the braking system indicator remains off, the ABS system isn't working normally and the wheels may be locked in hard braking or on slippery road surface.

In any of the following cases, there is a problem with the components that are monitored by this indicator. Contact a BYD service station as soon as possible to have the vehicle serviced.

- If this indicator doesn't turn on or stays on when the ignition switch is at ON;
- If this indicator turns on when you are driving the vehicle.

The fact that this indicator turns on temporarily does not mean that something is wrong.

⚠ CAUTION

- If both the (ABS) indicator and braking system indicator turn on in driving, stop the vehicle immediately and contract a BYD service station to service your vehicle.
- In this case, the ABS is not working and the vehicle becomes hard to control.

Brake Pad Wear Warning Indicator

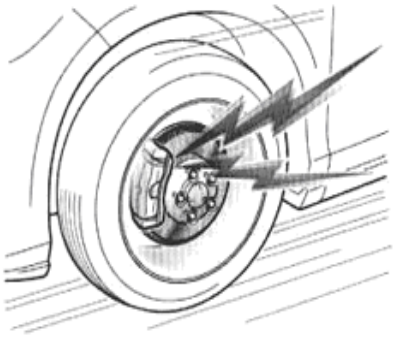

Disc bake pads have built-in wear warning indicators that make warning sound when the worn brake pads must be replaced by new pads.

When you hear high-pitched noise or friction noise in driving, drive to the nearest service station to check and replace the brake pads.

Downloaded from www.Manualslib.com manuals search engine

Don't drive your vehicle for long distance with the warning sound going on.

Continuing to drive with worn-out brake pads could result in costly brake repair. Meanwhile, the braking distance gets longer and you must press the brake pedal harder.

Storage of Luggage

Abide by the following instructions on the luggage storage in the vehicle:

- It is recommended to keep luggage and cargos in the trunk. Make sure all luggage cannot move in driving.
- Maintain proper distribution of weight across the vehicle. Heavy articles must be kept in the front part of the trunk to ensure proper weight distribution.
- Don't leave unnecessary articles on the vehicle to save fuel.

CAUTION

- The luggage stored in the trunk must be lower than the height of the seatback; otherwise the luggage may move forward in driving. The luggage or cargos must be placed as low as possible if they cannot be placed on the floor directly.
- To prevent the luggage from injuring the occupants, do not tilt any seatback too far when the vehicle is moving.
- Don't let anybody stay in the trunk when the vehicle is moving. All occupants must sit in the seats and wear seal belts properly. Otherwise he could be severely injured or even die in a hard braking or crash accident.
- Don't leave any article on the dashboard when you are driving the vehicle. It may interfere with the driver's visibility. In accelerating or turning, it may move and affect the driver's ability to steer or control the vehicle. In collision, it may cause personal injury to the occupants.

Downloaded from www.Manualslib.com manuals search engine

Chapter 4 Starting and Driving

Before engine is started.....4-2
Parking Brake.....4-2
Starting Engine.....4-3
Manual Transmission.....4-6
Automatic Transmission.....4-8
Safety Inspection before Driving.....4-10
Driving Tips in Various Conditions.....4-11
Driving in Bad Weather.....4-12
How to Save Fuel and Extend Vehicle Service Life.....4-13

Downloaded from www.Manualslib.com manuals search engine

Before engine is started

1. Observe the area around the vehicle.
2. Make adjustment to the seats, seat backs, seat cushions, headrests, steering wheel angle and height, if necessary.
3. Adjust the interior and exterior rearview mirror.
4. Lock up all doors.
5. All occupants must fasten their seat belt.
6. Check the fuel gauge and check whether all warning indicators are working normally.

Parking Brake

When parking the vehicle, firmly apply the parking brake to keep the vehicle stationary.

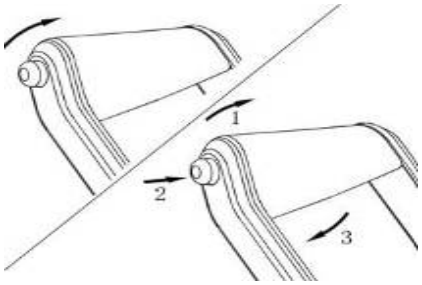

To set the parking brake, pull up the parking brake handle. To get larger braking force, press down and hold the brake pedal first and then pull up the parking brake handle.

To release the parking brake, slightly pull up the parking brake handle (1), press the lock release button (2) and then put down the parking brake handle (3).

To remind you that the parking brake is applied, the warning indicator on the dashboard will stay on until you release the parking brake handle.

⚠ CAUTION

- To park an automatic transmission vehicle, shift to P gear; to park a manual transmission vehicle, turn off the engine and shift to any gear other than N gear. This can prevent the vehicle from moving due to accidental operation or parking brake failure.
- Before driving the vehicle, make sure the parking brake is fully released and the parking brake warning indicator goes out.
- Driving with the parking brake on can cause damage to the rear brake, tires and axle.

Downloaded from www.Manualslib.com manuals search engine

Starting Engine

(a) Before Starting

1. Firmly apply the parking brake.
2. Turn off all unnecessary lights and accessories.
3. If an automatic transmission is equipped, shift to P or N gear.

   If a manual transmission is equipped, shift to N gear.
4. Press down the brake pedal or clutch pedal to the bottom and hold there until the vehicle starts up. (For a manual transmission vehicle, even not at N gear, you can start the engine by stepping down on the clutch pedal. But this operation is not recommended.)

(b) Starting Engine

Always follow the instructions in (a) Before Starting.

Push Button Starting

This vehicle is equipped with a smart key system. You can press the button on the smart key to turn on the engine.

Normal Starting Procedure

To start the engine, a smart key must be in the vehicle.

The indicator on the smart key will turn green when you firmly pressing down the brake or clutch pedal. Press the start button firmly and slowly to start the engine.

Warm up the engine in driving rather than running idle. Drive the vehicle at stable speed until the engine coolant temperature rises up to the normal range.

NOTICE

- Each starting attempt must be less than 20 seconds, otherwise the engine and wiring system may get overheated.
- Don't let a cold engine run at high speed.
- If the engine stalls frequently or is hard to start, your vehicle must be checked immediately.

Downloaded from www.Manualslib.com manuals search engine

If Engine Stalls

Try to start the engine by the normal starting procedure.

NOTICE

- Don't operate the Start key when you get oil on your hand.

⚠ CAUTION

- When the Start switch get faulty during the starting procedure, stop using it and contact a BYD service station to check the vehicle.

If Engine Cannot Start

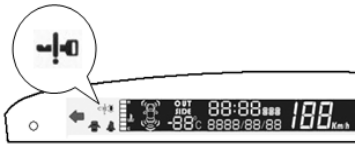

In the following cases, the engine cannot start.

- If the smart key isn't in the vehicle: when you press the Start button, the keyless entry & start system indicator will come on and the buzzer will sound.
- Even if the smart key is in the vehicle, when its transmitter is blocked (for example, the smart key is on the floor or in the glove box), the engine cannot be started.

In the following cases, the engine cannot start when you press the Start switch:

- If the smart key functions are not working, the battery in it may have depleted.

  Try the starting procedure again while holding the smart key close to the Start switch. (For details, see "Keyless Entry & Start System" in section 1-2.)

  Replace the battery in the smart key as soon as possible. (See "Replace Battery in Card Key" and "Replace Battery in Electronic Smart Key" in section 1-2.)

- If the engine starts repeatedly in a short period of time.

  Please wait for at least 10 seconds before trying again.

- If the green indicator on the Start switch is flashing and the keyless entry & start system indicator on

Downloaded from www.Manualslib.com manuals search engine

the dashboard comes on, it indicates the steering wheel is locked.

To release it, press down the Start switch and shake the steering wheel slightly at the same time.

- If the orange indicator on the Start switch is flashing and the keyless entry & start system indicator on the dashboard comes on, it indicates the steering lock is faulty.

  Please contact a BYD service station to check the vehicle and all keys.

- In addition to the situations above, the keyless entry and start function may not work under certain ambient conditions. For details, see "Keyless Entry & Start System" in section 1-2.

Driving and Parking with Keyless Entry & Start System

Tips on Use of Keyless Entry & Start System

When using the keyless entry & start function, you must have a smart key on hand to start the engine.

Sometimes a passenger may take away the smart key without letting the driver know it, and in this case the engine cannot be started. In addition, the power may not be at OFF when you leaving the vehicle.

Always take the smart key with you when leaving the vehicle.

NOTICE

- Don't touch the Start switch in driving.

If an emergency engine stop is necessary when you are driving the vehicle, press and hold the Start switch for 3 seconds.

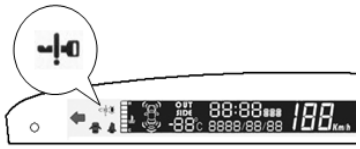

Keyless Entry & Start System Indicator

System Function Reminder

In case of any of the following warnings, follow the instructions below:

(A) If the combination instrument buzzer sounds once when turning on the ignition switch;

This indicates the smart key is not inside the vehicle. The keyless entry & start system indicator stays on for up to 8 seconds. You can operate the ignition switch only when the smart key is inside the vehicle.

Downloaded from www.Manualslib.com manuals search engine

(B) If the combination instrument buzzer sounds once and the indicator flashes when turning off the ignition switch;

This indicates the battery in the smart key runs low. Replace the smart key battery in advance to ensure normal operation of the keyless entry & start system.

(C) If the green indicator on the ignition switch is flashing when turning on the ignition switch;

This indicates the steering lock is stuck. To release it, press down the ignition switch and slightly shake the steering wheel at the same time.

(D) If the orange indicator on the ignition switch blinks once every 2 seconds;

This indicates there is trouble with the steering lock, and your vehicle must be serviced.

Manual Transmission

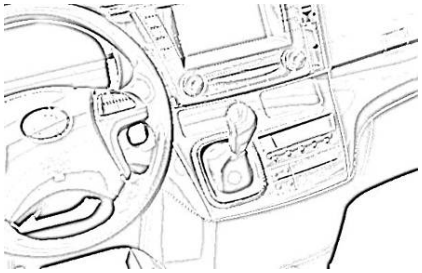

For stable operation of the manual transmission, synchronizer systems are equipped for all forward gears.

The manual transmission is equipped with a lock device to prevent shifting from 5th gear directly to Reverse gear.

To shift gears, press the clutch pedal fully down; to protect the clutch from excessive wear, don't step on the clutch pedal unless you want to shift the gear.

You can shift to Reverse gear only after the vehicle stops. When the vehicle is still moving, shifting to Reverse gear may damage the transmission. After you step down on the clutch pedal, please wait for a few seconds and then shift to Reverse gear; you can also shift to a forward gear for a short moment and then shift to Reverse gear. In this way the gears will stop before shifting to reverse, preventing the gears from "grinding" each other.

In braking, you can get extra braking force from the engine by downshift. The engine braking force can maintain a safe speed, and prevent the brake overheating while driving downhill. Before downshifting, the engine speed shown on the tachometer must not enter the red zone. Refer to the maximum allowable speed table below.

Downloaded from www.Manualslib.com manuals search engine

Driving in a higher gear can maintain stable engine running. Doing so will save fuel and reduce exhaust emission. The recommended gear shift points are listed below:

Upshift	Gear shifting speed
1st to 2nd	20-25 km/h
2nd to 3rd	35-45 km/h
3rd to 4th	50-60 km/h
4th to 5th	70-80 km/h

Maximum Allowable Speed

There is a maximum allowable speed for each gear. When exceeding these speeds, the engine speed will enter the red zone on the tachometer. If this occurs, you will feel the engine cuts out regularly, which is caused by a limiter in the engine's computer controls. The engine will run normally when you reduce the engine speed below the red zone.

To prevent damage to the engine, do not downshift if you are going faster than the maximum allowable speed for the next lower gear.

Gear	Maximum Allowable Speed
1st	47 km/h
2nd	87 km/h
3rd	122 km/h
4th	164 km/h
Reverse	40 km/h

Downloaded from www.Manualslib.com manuals search engine

Automatic Transmission

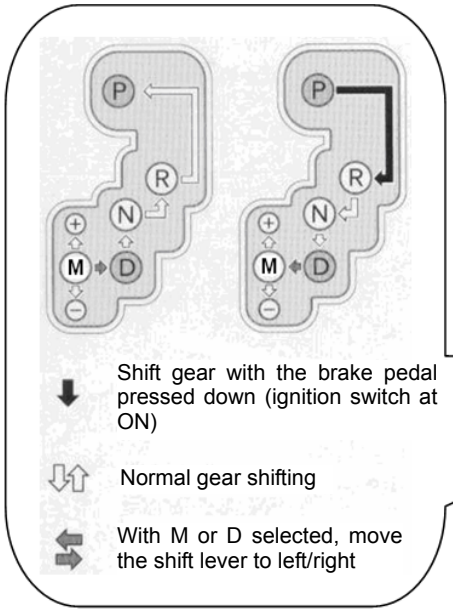

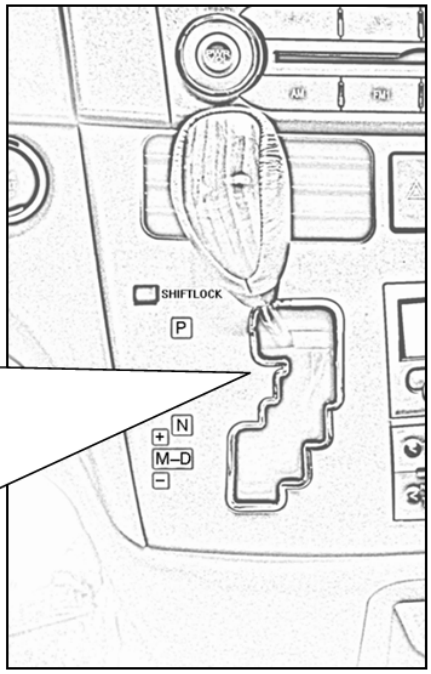

The automatic transmission is equipped with a shift lock system to minimize the possibility of incorrect operation. The shift lever cannot be moved out of P gear unless the brake pedal is pressed down while the ignition switch is at ON.

(a) Shift Lever

The current gear is displayed on the combination instrument.

P: When parking, starting engine or when the key is removed.

R: Reverse gear

N: Neutral gear

D: Drive gear (you can shift to overdrive gear)

M: Drive at M gear

+: Upshift

-: Downshift

Downloaded from www.Manualslib.com manuals search engine

(b) Drive with Automatic Transmission Mode

1. Start the engine following the instructions in "Starting Engine". The transmission must be in P or N.

2. Press down the brake pedal, and move the shift lever into D.

The automatic transmission will select a suitable gear according to the driving conditions, such as the cruise setting or vehicle load.

Driving in D gear can save fuel and improve the vehicle stability. You can shift into overdrive gear from D gear. When the engine coolant temperature is low, the transmission will not shift into overdrive gear even if it is in D.

⚠ CAUTION

- Never step on the accelerator pedal when shifting gear.
- Don't drive in N gear.

(c) Drive with Manual Transmission

When the shift lever is in D, shift it into M gear to switch to manual transmission mode. Under the manual mode, push the shift lever to + or – to manually upshift or downshift.

Upshift +: when driving under manual transmission mode, if you push the shift lever to this position, the powertrain control module will upshift according to the vehicle speed until the transmission is in the highest gear.

Downshift -: when driving under manual transmission mode, if you push the shift lever to this position, the powertrain control module will downshift according to the vehicle speed until the transmission is in the lowest gear.

The M indicator comes on and the current gear is displayed on the combination instrument.

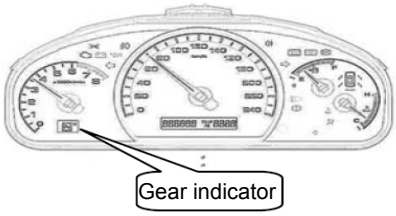

Gear Selection:

1. Upshift
2. Downshift

Downloaded from www.Manualslib.com manuals search engine

Safety Inspection before Driving

You had better make a safety inspection before driving away. A simple safety inspection can ensure safe driving and let you enjoy driving. To conduct the visual inspection, you are supposed to be familiar with the automotive systems.

⚠ CAUTION

- If you conduct the safety inspection in an enclosed garage, make sure there is proper ventilation. Exhaust fumes contains many toxic substances.

Before Starting Engine

Exterior Inspection

Tires: check the tire pressure with a tire gauge, and check for crack, damage or excessive wear.

Wheel nuts: make sure the nuts are not loose or missing.

Fuel leakage: check under the vehicle for leak of fuel, oil, water or any other liquid. (water dripping from using the A/C system is normal)

Oil level: stop the vehicle on level ground, turn off the engine and measure the oil level with a dipstick. (refer to "Check Oil Level" in section 8.2.)

Lights: make sure the headlights, brake lights, tail lights, turn signal lights and other lights are working normally. Check the headlight beam height.

Interior Inspection

Spare tire, jack and wheel nut wrench: check the press the spare tire, and make sure the jack and wheel nut wrench are in the vehicle.

Seat belts: make sure all buckles can fasten the seat belts normally, and check the seat belts for wear or damage.

Instrument and controllers: make sure the service reminding indicators and defrosters are working normally.

Brake system: make sure the brake pedal free travel is sufficient.

Inside engine compartment

Spare fuses: make sure there are spare fuses for all specifications indicated on the fuse box.

Coolant level: make sure the coolant level is appropriate. (refer to the section "Check Engine Coolant Level")

Wiring: check for loose, damaged or broken wires.

Fuel pipes: check for leaking or loose fuel pipes.

Downloaded from www.Manualslib.com manuals search engine

After Starting Engine

Exhaust system: listen for leak noise in the exhaust system. If a leak is identified, you must arrange a repair immediately. (See "Engine Exhaust Warning" in Chapter 3.)

Oil level: stop the vehicle on level ground, turn off the engine and measure the oil level with a dipstick.

In Driving

Instruments: make sure the speedometer and other meters are working normally when you are driving the vehicle.

Brake system: apply the brake under safe traffic conditions, and make sure the vehicle will not pull to the left or right side.

Other abnormalities: check whether there is any other loose or leaking part. Listen for abnormal noise.

If no abnormality is found out, you can enjoy your driving now.

Driving Tips in Various Conditions

- Always slow down in gusty crosswinds. This will allow you much better control.
- Drive slowly onto curbs and, if possible, at a right angle. Avoid driving onto high, sharp-edged objects and other road hazards. Failure to do so can lead to severe tire damage such as a tire burst.
- Drive slowly when passing over bumps or traveling on a bumpy road. Otherwise, the impact could cause severe damage to the tires and/or wheels.
- When parking on a hill, turn the front wheels until they touch the curb so that the vehicle will not roll. Apply the parking brake, and set the transmission in "P". If necessary, place wheel wedges behind the rear tires.
- The brake may get wet after washing the vehicle or driving through water. To check whether the brake is wet, make sure the area around the vehicle is safe and slightly press down the brake pedal. If you feel the braking force is abnormal, the brake may be wet. To dry them, drive the vehicle cautiously while lightly pressing the brake pedal with the parking brake applied. If the brake still cannot work normally, stop the vehicle at a safe place and contact a BYD service station for help.
- After driving in sand, mud, water or snow, immediately check whether the brake system is working normally.

Downloaded from www.Manualslib.com manuals search engine

CAUTION

- Before driving the vehicle, make sure the parking brake is fully released and the parking brake warning indicator goes out.
- Do not leave the vehicle unattended while the engine is running.
- Do not rest your foot on the brake pedal in driving. This will cause overheating, unnecessary wear and waste fuel.
- When driving downhill, slow down the vehicle and shift to a low gear. Excessive use of the brake can cause overheating and malfunction.
- Be careful when speeding up, upshifting, downshifting or braking on a slippery road. Hard acceleration or engine braking may cause wheel skidding or spinning.
- Don't continue driving when the brake is wet. Wet brake requires longer braking distance. The vehicle may also pull to one side in braking. At this time, the parking brake will not hold the vehicle firmly in place.

NOTICE

- Don't drive in deep water. Large amount of water entering the engine compartment may cause damage to the engine or electric components.

Driving in Bad Weather

In bad weather, rain, fog or snow will reduce visibility and driving force between the tires and the road. Following the precautions below can improve driving safety.

Keep your vehicle well-maintained. If you have to drive in bad weather, you should be extremely careful. Don't use cruise control in bad weather.

Driving tips: don't drive at high speed in bad weather. Even if the road is just moderately wet, the vehicle needs longer response time to activate control devices. On a damp road, hard turning or braking may cause the vehicle running out of control. In the first few miles of driving under poor driving conditions, especially on snowy days, you should be extremely careful. You may have forgotten the winter driving skills you developed last winter. Make exercises

Downloaded from www.Manualslib.com manuals search engine

to regain them.

Be especially careful when it rains after a long dry period. That's when the oil and grease builds up on the road, creating slippery road conditions.

Visibility: under all weather conditions, it is very important to have a clear view outside the vehicle and to let other drivers have a clear view of your vehicle. In bad weather, visibility will reduced significantly. Turn on the headlights in daylight so that other drivers and roadway users can see you.

You must check the windshield wiper and washer regularly. Keep sufficient fluid in the washer fluid reservoir. If the wiper cannot clean the windshield or leave streaks, the wipe blade must be replaced. In addition, you can use the defrosters and A/C system to prevent fogging on the inside of windows (see "Rear Windshield and Exterior Rearview Mirror Defrosters").

Driving force (adhesive force): regularly check the tire wear and tire pressure. Inappropriate tire wear and pressure may cause drifting (tire adhesion is lost) on wet surface.

Always observe the ever-changing road conditions. Wet leaves on the road may be as slippery as ice. A road that appears to be dry may be covered by layers of thin ice. When the outside temperature is near 0 degrees Celsius, the road may be covered by a mixture of water and ice and driving can be very dangerous. The tire adhesion may experience sudden change.

Be highly careful when downshifting. If the tire driving force is low, the driving wheels may be locked temporarily and result in skidding.

How to Save Fuel and Extend Vehicle Service Life

The following tips can help you improve fuel economy simply. Abiding by them can also extend the service life of the vehicle and save maintenance costs.

- Keep your tires inflated to the proper pressure. Check the tire pressure every two weeks or at least monthly. Insufficient tire pressure may cause excessive tire wear and increased fuel consumption.
- Don't load unnecessary weight in the vehicle. Heavier vehicles increase the engine load and use more fuel.
- Don't warm up the engine with a long idle period. Once the engine is running stable, you can drive away – but slowly. Pay attention that in cold days, it would take a

Downloaded from www.Manualslib.com manuals search engine

longer time to warm up the engine.

- Speed up slowly and stably. Don't accelerate suddenly. Shift to a higher gear as soon as possible.
- Prevent the engine from idling for a long time. if you must stop the vehicle for a long time, please turn off the engine.
- Prevent the engine from overspeed. Select a suitable gear according to the road conditions.
- Avoid frequent acceleration and sudden stops. Repeated acceleration and braking can lower your fuel mileage.
- Avoid unnecessary stopping and braking. Maintain a steady pace. Try to time the traffic lights so you only need to stop the vehicle as little as possible or take advantage of streets without traffic lights. Keep a proper distance from other vehicles to avoid sudden braking. This will also reduce brake wear.
- Avoid heavy traffic or traffic jams whenever possible.
- Don't rest your foot on the brake pedal. This causes premature wear, overheating and poor fuel economy.
- Maintain a moderate speed on highways. The faster you drive, the greater the fuel consumption. By reducing your speed, you will cut down on fuel consumption.
- Keep the front wheels in proper alignment. Avoid hitting the curb and slow down on rough roads and humps. Improper alignment not only causes faster tire wear but also increases the engine load and the fuel consumption.
- Keep the bottom of your vehicle free from mud, etc. This not only reduces the vehicle weight but also helps prevent corrosion.
- Always keep the vehicle in optimum conditions. A dirty air filter, improper valve clearance, dirty spark plugs, dirty oil and grease, improperly adjusted brakes, etc. all lower engine performance and cause poor fuel economy. For longer service life of all parts and lower operating costs, keep your vehicle serviced at scheduled intervals. If you often drive under severe conditions, your vehicle must receive more frequent maintenance. (See Chapter 8.)

⚠ CAUTION

- Never switch off the engine while driving downhill. This will disable important systems such as the power steering and brake booster. The emission control system cannot work when the engine is turned off.

Downloaded from www.Manualslib.com manuals search engine

Chapter 5 Emergency Handling

Engine Stalling in Driving.....5-2
Vehicle Cannot Start.....5-2
If Your Vehicle Overheats.....5-6
If You Have a Flat Tire.....5-7
If the Vehicle Gets Stuck.....5-14
Towing.....5-15
If You Cannot Shift Automatic Transmission Selector Lever.....5-18

Downloaded from www.Manualslib.com manuals search engine

Engine Stalling in Driving

If the engine stalls while driving,

1. Reduce the vehicle speed gradually, keeping a straight line. Be careful to coast the vehicle to a safe place.

2. Turn on the emergency flashers immediately.

3. Try to start the engine again.

If you cannot start the engine, follow the instructions in "Vehicle Cannot Start".

CAUTION

- If the engine is not running, the power assist for the brakes and steering will not work, so steering and braking will be much harder than usual.
- If the engine stalls while driving, don't open any door until the vehicle stops completely. This can prevent accidents on the road.

Vehicle Cannot Start

(a) Simple Inspection

Before the inspection, perform the procedure in "Starting Vehicle" in Chapter 4 and make sure you have sufficient fuel. Check whether you can start the engine with another key. If that key works, the key you used previously is faulty and you must contact a BYD service station to service it. If all keys aren't working, the engine cut-off device may be at fault. Contact a BYD service station to service your vehicle. (See "Key" in section 1.1)

If the engine can not rotate or rotates too slowly

1. Check whether the battery terminals are tighten and clean.
2. If there is no problem with the battery terminals, turn on the interior lights.
3. If the exterior lights come on, you can try emergency engine starting. For details, please refer to "(b) Emergency Engine Starting".
4. If the lights dim noticeably or go out when the starter is working, the battery is depleted. You can also determine whether the battery is running out through the brightness of the combination instrument. In this case, you can try jump starting. For details, refer to "(d) Jump Starting".
5. After recharging or replacing the battery, if the engine still cannot be started, follow the instructions in "(e) Engine Starting after Battery Discharge".

If the interior lights come on normally but the engine cannot be started, your vehicle needs to be serviced or adjusted. Contact a BYD service station for help.

Downloaded from www.Manualslib.com manuals search engine

NOTICE

- Don't start the engine by towing or pushing the vehicle. This may cause collision or damage to the vehicle when the engine starts, and the three-way catalytic converter may get overheated, even leading to a fire.

If the engine rotates normally but cannot start

1. Turn the ignition switch to ACC or OFF, and try to start the engine again.
2. If the engine still cannot start, oil leak may occur in the engine due to the repeated starting attempts. For details, refer to "(c) Engine Starting with Oil Leak".
3. If the engine still cannot be started, your vehicle needs to be serviced or adjusted. Contact a BYD service station for help.

(b) Emergency Engine Starting

If the starter system and Start button function normally, but the engine cannot be started, try the procedure below to start the engine:

1. Set the transmission into P gear.
2. Press the Start button and set the ignition switch to ACC.
3. Press the Start button for some 15 seconds, and meanwhile firmly step down on the brake pedal and hold it down.

Even if you can start the engine by this procedure, the starting system may have fault. Contact a BYD service station to check your vehicle.

⚠ CAUTION

- Don't place any article near the ignition switch. It may push the switch accidentally and cause unexpected engine starting.

(c) Engine Starting with Oil Leak

Repeated starting attempts may cause oil leak in the engine, resulting in starting failure.

In this case, fully press down the brake pedal and accelerator pedal and, at the same time, press and hold the Start button for 15 seconds. Release the accelerator pedal and start the engine again.

If the starting attempt fails, wait for minutes and try again.

If the engine still cannot be started, your vehicle needs to be serviced or adjusted. Contact a BYD service station for help.

NOTICE

- Each starting attempt must be less than 30 seconds, otherwise the engine and wiring system may get overheated.

Downloaded from www.Manualslib.com manuals search engine

(d) Jump Starting

If you do not follow the correct procedure, jump stating may cause explosion of the battery, corrosion from the sulfuric acid, fire and damage to the electric components and severe damage to the vehicle.

If you need more information about the correct procedure, you are strongly recommended to get help from a BYD service station.

⚠ CAUTION

- The battery contains toxic and corrosive sulfuric acid. Wear safety glasses when jump starting, and avoid spilling acid on your skin, clothing or vehicle.
- If you get acid on your body or in your eyes, remove any contaminated clothing and flush the affected area with water immediately, then get immediate medical treatment. If possible, continue to apply water with a sponge or cloth to the affected area while on the way to the hospital.
- The gas normally produced by a battery will explode if a flame or spark is brought near. Use only standard jumper cables and do not smoke or light a match while jump starting.

NOTICE

- The battery used for boosting must be 12V. Make sure the booster battery is correct before jump starting.

Jump Starting Procedure

1. If the booster battery is installed in another vehicle, make sure the vehicles are not touching. Turn off all unnecessary lights and accessories.

   The booster battery must be equivalent to have higher rating than the depleted battery.

   If the jump starting fails, charge the booster battery for a few minutes and try again.
2. If required, remove all the vent plugs from the booster and discharged batteries. Lay a piece of cloth over the open vents on the batteries. (This helps reduce the risks of explosion hazard, personal injuries and burns.)

Downloaded from www.Manualslib.com manuals search engine

3. If the engine in the vehicle with the booster battery is not running, start it and let it run for a few minutes. During jump starting, run the engine at about 2000 rpm with the accelerator pedal lightly depressed.

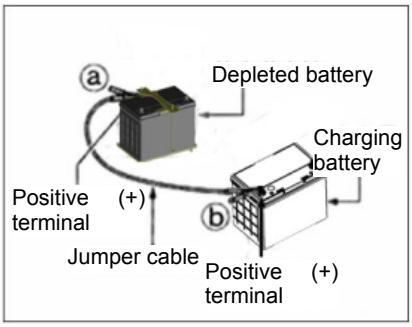

4 Make the cable connections in the order of a, b, c, d.

a. Connect the clamp of the positive (red) jumper cable to the positive (+) terminal on the depleted battery.

b. Connect the clamp at the other end of the positive (red) jumper cable to the positive (+) terminal on the booster battery.

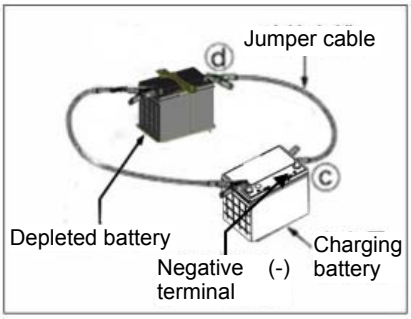

c. Connect the clamp of the negative (black) jumper cable to the negative (-) terminal on the booster battery.

d. Connect the clamp at the other end of the negative (black) jumper cable to a solid unpainted metal point of the vehicle with the depleted battery.

Don't connect the cable to or near any part that moves when the engine is cranked.

⚠ CAUTION

- When making the connections, to avoid serious injury, do not tilt the battery or accidentally let the jumper cables or clamps touch anything except the correct battery terminals or the ground.

5. Charge the depleted battery for some 5 minutes. Keep the engine in the vehicle with the booster battery running at about 2000 rpm with the accelerator pedal lightly depressed.
6. Start your engine in the normal way. After starting, run it at about 2000 rpm for several minutes with the accelerator pedal lightly depressed.
7. Carefully disconnect the cables in the exact reverse order: first

Downloaded from www.Manualslib.com manuals search engine

remove the negative cable and then the positive cable.

8. Carefully dispose of the cloths covering the batteries - they may now contain sulfuric acid.
9. Replace all the battery vent plugs that are removed previously.

After recharging or replacing the battery, maybe you still cannot start the engine. In this case, contact a BYD service station for help.

If the cause of your battery discharging is not apparent (for example, lights left on), you should have the vehicle checked.

If First Starting Attempt Fails

Check whether the clamps of the jumper cables are tight. Recharge the depleted battery with the jumper cables connected for several minutes and restart the engine in the normal way.

If the next starting attempt fails, the battery may be depleted. Have your vehicle checked by a BYD service station.

If Your Vehicle Overheats

If your engine coolant temperature gauge indicates overheating, if you experience a loss of power, or if you hear a loud knocking or pinging noise, the engine has probably overheated. You should follow this procedure:

1. Pull safely off the road, stop the vehicle and turn on the emergency flashers. Put the transmission in "P" (automatic) or neutral (manual) and apply the parking brake. Turn off the A/C system if it is working.
2. If coolant or steam is boiling out of the radiator or reservoir, stop the engine. Open the engine hood after the steam subsides. If no coolant or steam is erupting out, leave the engine running and check whether the electric cooling fan is working. If it is not, turn off the ignition switch.

Downloaded from www.Manualslib.com manuals search engine

⚠ CAUTION

- To avoid personal injury, don't open the engine hood until there is no steam coming out it. Escaping steam or coolant is a sign of very high pressure. Contact a BYD service station for help.

3. Look for obvious coolant leaks from the radiator, hoses, and under the vehicle. However, note that water dripping from the A/C system is normal if it has been used.

⚠ CAUTION

- When the engine is running, keep hands and clothing away from the moving fan and engine drive belts.

4. If the coolant is leaking, stop the engine immediately. Contact a BYD service station for help.

⚠ CAUTION

- Do not attempt to remove the radiator cap when the engine and radiator are hot. Scalding hot coolant and steam may blow out under pressure. This could cause burns or other serious injury.

If You Have a Flat Tire

1. Reduce the vehicle speed gradually, keeping a straight line. Carefully pull off the road at a safe place. Park the vehicle on a level and solid ground. Don't stop the vehicle on the center divider of a highway.
2. Stop the engine and turn on the emergency flashers.
3. Firmly set the parking brake and put the transmission in P (automatic) or N (manual) gear.
4. All occupants must get out of the vehicle and stay away form the traffic.
5. Carefully read the instructions below.

NOTICE

- Do not continue driving with a flat wire. Driving even a short distance may cause permanent damage to wheels and tires.

Downloaded from www.Manualslib.com manuals search engine

⚠ CAUTION

When jacking, be sure to following the instructions below to reduce the possibility of severe injury or even death:

- Follow the manufacturer's instructions on using the jack.
- Don't put any part of your body under the vehicle supported by the jack. Otherwise, personal injury may occur.
- Don't start or run the engine while the vehicle is supported by the jack.
- Stop the vehicle on a level and solid ground, firmly set the parking brake and put the transmission in "P" (automatic) or N (manual) gear. If necessary, block the wheel diagonally opposite to the one to be replaced.
- Make sure to locate the jack properly in the jack point. Raising the vehicle with an improperly positioned jack may damage the vehicle or allow the vehicle to fall off the jack and cause personal injury.
- Never get under the vehicle when it is supported by the jack alone.
- Use the jack only for lifting the vehicle during tires/wheel replacement.
- Don't raise the vehicle with someone in it.
- When raising the vehicle, do not place any objects on top of or underneath the jack.
- Raise the vehicle only high enough to remove and change the flat tire.

Using a Spare Tire

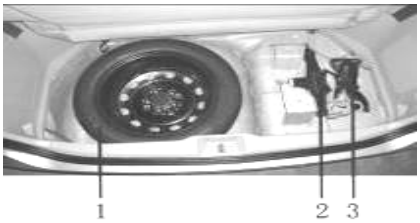

1. Spare tire 2. Jack 3. Toolkit

1. Take out the spare tire and required tools: jack, wheel nut wrench, sleeve (used to remove the tire).

To prepare yourself for an emergency, you should familiarize your self with the use of the jack and other tools and their storage locations

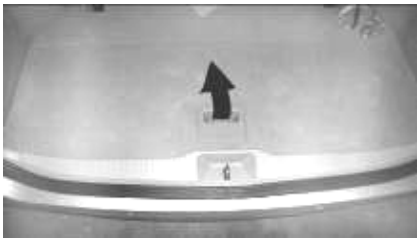

Downloaded from www.Manualslib.com manuals search engine

Lift up and remove the lower cover plate

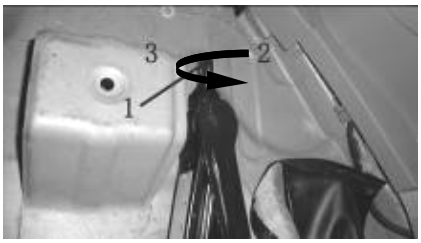

Take out tools

1. Fastening connector
2. To take out the jack, rotate the connector in the compression direction until the jack is released.
3. To store the jack, rotate the connector in the extension direction until the jack is firmly fastened. This prevents the jack from falling off during a collision or hard braking.

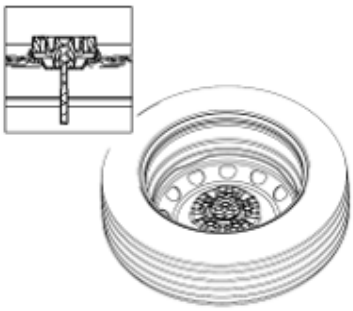

Take out the spare tire

Loosen and remove the nut. Take out the spare tire.

To store the spare tire, put it in place with the inner side of the wheel facing up. Then secure the tire by steps in the reverse sequence of removal. This prevents the spare tire from flying forward during a collision or hard braking.

2. Block the wheel

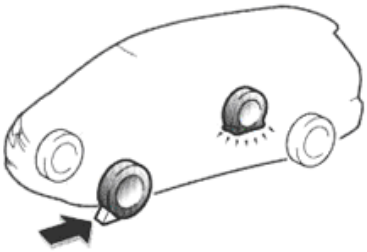

When jacking up the vehicle, block the wheel diagonally opposite to the flat tire to keep the vehicle from rolling.

The chock block must be placed in front of a front wheel and behind a rear wheel.

Downloaded from www.Manualslib.com manuals search engine

3. Loosen wheel nuts

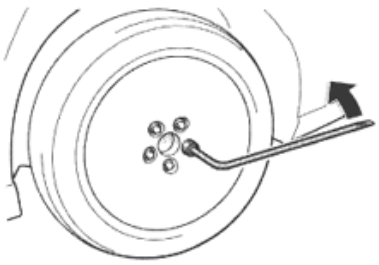

Loosen all the wheel nuts.

Loosen all the wheel nuts before raising the vehicle.

Turn the wheel nuts anticlockwise to loosen them. To get the maximum torque, fit the wrench to the nut so that the handle is on the right side. Hold the wrench near the end of the handle and pull it up. Be careful that the wrench does not slip off the nut.

Do not remove the nuts yet; just unscrew them by one and a half turn.

CAUTION

- Never use oil or grease on the bolts or nuts. Otherwise the nuts may become loose and allow the wheels to fall off, which may cause a severe accident.

4. Locate the jack

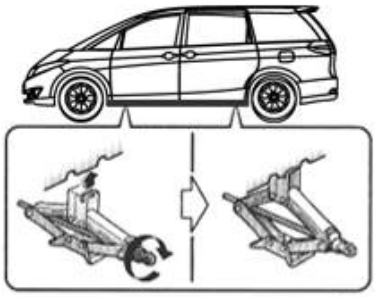

Position the jack at the correct jack point as shown in the figure above.

Make sure the jack is placed on a level and solid ground.

5. Raise the vehicle

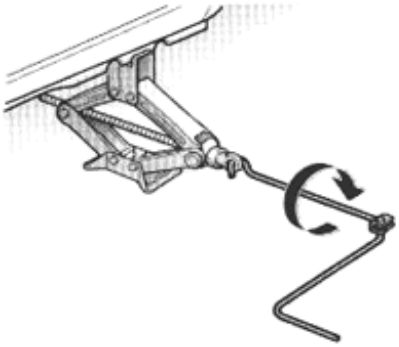

Make sure no one is in the vehicle, and then raise it high enough to remove and change the flat tire.

Remember you will need more ground clearance when installing the spare tire than when removing the flat tire.

To raise the vehicle, insert the jack handle into the jack (it is a loose fitting) and turn the handle clockwise. As the jack touches the vehicle and begins to lift it up, double check that the jack is

Downloaded from www.Manualslib.com manuals search engine

properly located.

⚠ CAUTION

- Never get under the vehicle when it is supported by the jack alone.

6. Replace the wheel

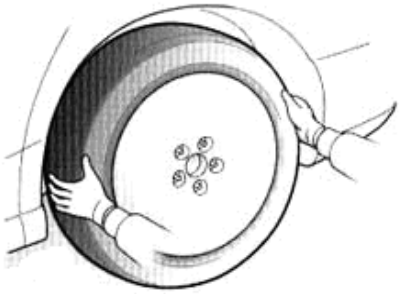

Remove the wheel nuts and change the tire.

Remove the flat tire and put is aside.

Roll the spare wheel to the installation position, and align the holes in the wheel with the bolts. Lift up the wheel and get the top bolt through its hole. Wiggle the tire and press it back through the other bolts.

Before putting on the wheel, clean up the mounting surface with a wire brush to remove any rust or dirt. When installing a wheel, make sure the metal to metal contact on the mounting surface is good. Otherwise it may reduce the driving comfort, cause the wheel nuts to get loose and eventually cause the wheel to come off while driving.

7. Reinstall all the wheel nuts

Reinstall the wheel nuts and tighten them as much as you can by hands.

Press back on the tire to check whether you can further tighten the nuts.

⚠ CAUTION

- Never use oil or grease on the bolts or nuts. Otherwise the bolts may be damaged when the nuts are tightened too hard, or the nuts may get loose and allow the wheels to fall off, which may cause a severe accident. If there is oil or grease on any bolt or nut, clean it.

Downloaded from www.Manualslib.com manuals search engine

8. Lower your vehicle

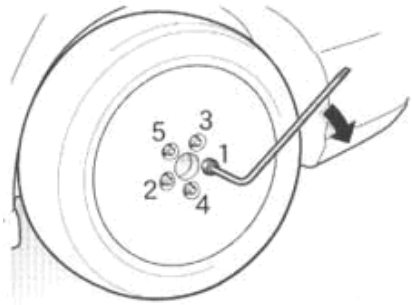

Lower the vehicle completely and tighten the wheel nuts.

Rotate the jack handle anticlockwise to lower the vehicle.

Please only use the wheel nut wrench to tighten the nuts. Don't use any other tool or lever, like pipe or your foot. Make sure the wrench is securely engaged over the nut.

Tighten each nut slightly at a time in the order shown in the figure above, and repeat the process until all nuts are firmly tightened.

⚠ CAUTION

- When lowering down the vehicle, make sure all portions of your body and all other persons around will not be injured.
- After replacing the wheel, all wheel nuts must be tightened with a torque wrench as soon as possible. Otherwise the nuts may become loose and allow the wheels to fall off, which may cause a severe accident.
- Don't attach a damaged plastic wheel ornament to the wheel. It may fall off while driving and cause an accident.

9. Restore the flat tire

Fasten the flat tire to the trunk.

⚠ CAUTION

- Put the flat tire in place and firmly fastened it. This reduces the possibility of personal injury in a collision or hard braking.

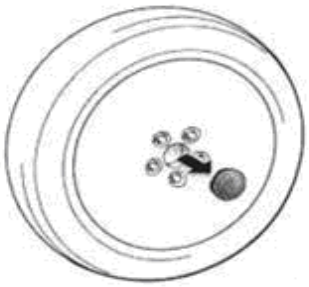

Remember that the wheel center ornament must be firstly removed from the opposite side.

Keep the wheel ornament properly.

Tighten the bolt so that its conical part

Downloaded from www.Manualslib.com manuals search engine

will match with the central hole in the wheel.

10. Reinstall the wheel ornament

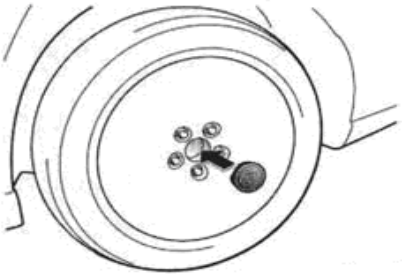

Push the wheel ornament into the central hole on the wheel.

CAUTION

- Handle the ornament with due care to avoid unexpected personal injury.
- Don't attach a damaged plastic wheel ornament to the wheel. It may fall off while driving and cause an accident.

11. After replacing a flat tire

Check the pressure of the newly installed tire.

Adjust the tire pressure to the value specified in Chapter 9. If the pressure is lower, drive slowly to the nearest service station and inflate the tire to the proper pressure.

Don't forget to install the tire valve cap. It can prevent air leakage by keeping dirt and moisture out of the valve core. If the cap is missing, have a new one put on as soon as possible.

Put all the tools and jack in proper storage.

After replacing the wheel, tighten the wheel nuts to the torque specified in Chapter 8 as soon as possible. Have the flat tire repaired in a service station.

CAUTION

- Before driving, make sure all the tools, jack and flat tire are secured in their storage position to reduce the possibility of personal injury in a collision or hard braking.
- Don't leave the transmission in N or P gear when replacing a flat tire.

Downloaded from www.Manualslib.com manuals search engine

If the Vehicle Gets Stuck

If the vehicle gets stuck in snow, mud, sand, etc., take the following measures:

1. Turn off the engine. Apply the parking brake and move the selector lever to P gear.

   As for a manual transmission, set it to N gear;
2. Dig out any mud, snow, sand, etc. around the stuck wheel.
3. Lay wood or stones before the stuck wheel to add traction;
4. Start the engine again;
5. Set the selector lever to forward or reverse gear, and drive carefully to free the vehicle.

CAUTION

- If you try to free the vehicle by rocking it forward and backward, make sure there is no person or object nearby. During the rocking, the vehicle may suddenly move forward or backward as it becomes unstuck. Please handle with due care.

NOTICE

To prevent damage to the transmission or other parts, follow the instructions below when rocking the vehicle:

- Do not press the accelerator pedal while shifting the selector lever or before the transmission is completely shifted to forward or reverse gear.
- Don't let the engine running at high speed and avoid spinning the wheels.
- If the vehicle remains stuck after rocking it for several times, consider other ways such as towing.

Downloaded from www.Manualslib.com manuals search engine

Towing

(a). Towing with a wheel-lift tow truck

Towing from the front – release the parking brake

NOTICE

- When lifting up the front or rear wheels, make sure there is sufficient ground clearance on the opposite end. Otherwise, the bumper or bottom of the vehicle may be damaged in towing.

Towing from the rear – put the front wheels on a tow dolly.

(b) Using a flat-bed tow truck

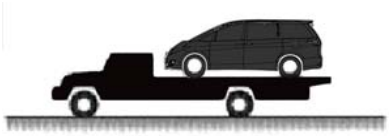

NOTICE

- If your vehicle is equipped with an automatic transmission, don't tow it from the rear end with the front wheels staying on the ground. Otherwise severe automatic transmission damage will occur.

If towing is necessary, we recommend you to have it done by a BYD service station or a commercial tow truck operator. When consulting about the towing service, please inform that the vehicle must be towed using (a) or (b) method.

When professional towing service is not available, carefully follow the instructions in "Emergency Towing" to tow the vehicle.

Using proper equipment in towing can prevent damage to the vehicle. Commercial towing operators are generally aware of the applicable laws and regulations on towing.

Your vehicle can be damaged in appropriate towing. Even a professional operator who knows the correct towing procedure could make a mistake sometimes. To avoid damage to the vehicle, make sure the precautions below are followed. If necessary, show this page to the tow truck driver.

Downloaded from www.Manualslib.com manuals search engine

Precautions on Towing

Use a safety chain system for any towing, and abide by all applicable laws and regulations. The wheels on the ground and their axle must be in good conditions. If the wheels or axle are damaged, please use a tow dolly.

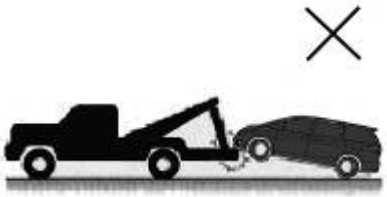

NOTICE

- Don't use a sling type tow truck, either from the front or rear. This may cause damage to the vehicle body.

Emergency Towing

If towing is necessary, we recommend you to have it done by a BYD service station or a commercial tow truck operator.

When professional towing service is not available, you can attach a cable or chain to the tow hook on the chassis for temporary towing. Handle the emergency towing with extreme care.

To install the front tow hook, refer to "Install Front Tow Hook" in this chapter.

CAUTION

- Only use the specified tow hook; otherwise the vehicle may be damaged.
- Don't tow the vehicle from the rear side with all four wheels on the ground. This may cause severe damage to the transmission.

In emergency towing, you must stay in your vehicle to operate steering and braking.

Your vehicle can only be towed in this way for a short distance on solid road surface. The wheels, powertrain, steering wheel and brakes must be in good conditions.

Downloaded from www.Manualslib.com manuals search engine

⚠ CAUTION

- Take special care when towing the vehicle behind another vehicle. Avoid sudden acceleration and hard steering, which may exert great stress on the tow hook, towing cable or chain. If the hitch or cable is broken, severe personal injury or vehicle damage will be caused.

NOTICE

- Only use the specified cable or chain for towing. And firmly attach the cable or chain to the tow hook.

Before towing, release the parking brake and set the transmission to N gear.

The ignition switch must be at ACC with the engine switched off or ON with the engine running.

⚠ CAUTION

- If the engine is not running, the power assist for the brakes and steering will not work, so steering and braking will be much harder than usual.

Install Front Tow Hook

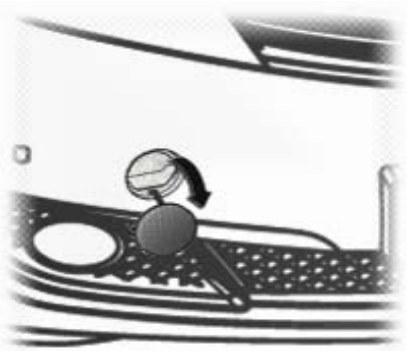

1. Remove the tow hook cover from the front bumper.

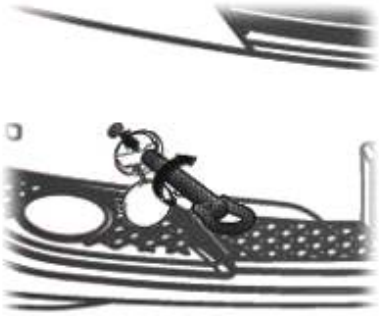

2. Get the front tow hook on hand. Install the front tow hook into the hole on the front bumper by rotating it clockwise (see "If You Have a Flat Tire" for the storage location of the toolkit).

Downloaded from www.Manualslib.com manuals search engine

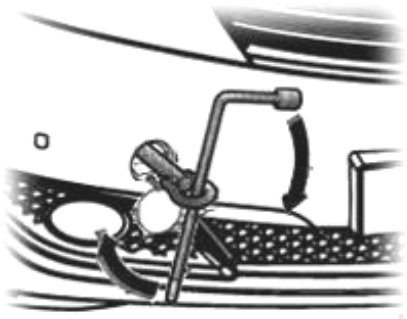

3. Tighten the front tow hook with the wheel nut wrench.

⚠ CAUTION

- The front tow hook must be tightened firmly. If it gets loose in moving, the towed vehicle may come off and cause severe personal injury or even death.

If You Cannot Shift Automatic Transmission Selector Lever

If you cannot shift the selector lever out of P position even if the brake pedal is pressed down, use the Shift Lock button as follows:

1. Turn the ignition switch to ACC. Firmly apply the parking brake.
2. Press down the Shift Lock button. Shift the selector lever out of P position.
3. Shift the selector lever to N position.
4. Start the engine. For the sake of safety, hold down the brake pedal during the whole process.

If the procedure doesn't work, have the system checked by a BYD service station as soon as possible.

Downloaded from www.Manualslib.com manuals search engine

Chapter 6 Vehicle Maintenance

Maintenance Requirements.....6-2
When Maintenance is Needed? 6-3
Maintenance Schedule.....6-3
Required Maintenance Record.....6-8

Downloaded from www.Manualslib.com manuals search engine

Maintenance Requirements

Regular vehicle maintenance is very important.

We strongly recommend you to abide by the maintenance schedule indicated below. Proper vehicle maintenance is helpful in the following aspects:

- Save fuel;
- Extend vehicle service life;
- Improve driving comfort;
- Ensure driving safety;
- Improve driving stability;
- Maintain full compliance with warranty terms;
- Ensure compliance with applicable laws and regulations.

Where to Go for Service?

It is recommended to have your vehicle serviced at a BYD authorized service station.

BYD technicians are well trained and kept up to date with the latest service knowledge through academic journals and training programs provided by BYD. They have learned to work on BYD vehicles rather than getting familiar with them in working. You can be confident that the BYD authorized technicians perform the best service.

Also BYD authorized service stations have special service tools supplied exclusively by BYD AUTO. BYD service stations can perform all services to meet the maintenance requirements - reliably and economically.

About Do-It-Yourself Maintenance

You can perform many maintenance items if you have basic mechanical knowledge and service tools. The maintenance items that you can perform by yourself are described in Chapter 8.

However, remember that part of the maintenance requires special service tools and professional skills. Such maintenance items must be performed by qualified technicians. Even if you are a skilled DIY technician, we recommend you to have the complicated maintenance items performed by a BYD authorized service station. The BYD service station will keep a maintenance record for your vehicle, which is very important to raise a warranty claim.

Downloaded from www.Manualslib.com manuals search engine

When Maintenance is Needed?

Always pay attention to the change in the performance and noise of the vehicle, and observe other audio-visual signs that service is needed. The apparent signs include:

- The engine has misfires, unstable running or knocking sound;
- Engine power reduces significantly;
- The engine is making abnormal noise;
- There is fluid leak at the bottom (water dripping after using the A/C system is normal);
- There is abnormal noise in the exhaust system (this indicates the risk of CO leakage; immediately open the windows and inspect the exhaust system);
- The tire pressure is insufficient: abnormal tire noise in turning, uneven tire wear;
- The vehicle pulls to one side when driving in a straight line on a flat road;
- There is abnormal noise in the suspension system while driving;
- The brake is working abnormally: soft brake pedal, low brake pedal, vehicle pulling to one side in braking;
- Coolant temperature continues to rise.

In any of the above cases, have your vehicle inspected by a BYD service station. The vehicle may need adjustment or repair.

⚠ CAUTION

- Don't continue driving until the vehicle is confirmed to be in good conditions. Otherwise, this may cause severe vehicle damage and even personal injury.

Maintenance Schedule

The maintenance intervals and mileage listed in the maintenance schedule below are designed on the assumption that the vehicle is used for the intended purpose. Please follow the instructions below:

1. Don't exceed the load limit of the vehicle. Overload will add extra load to the engine, brake and other vehicle parts.
2. Don't drive on restricted roads or exceed the speed limit.
3. If the vehicle will not be used for a long time, you must drive it regularly for a few miles.
4. Only use the recommended gasoline.

You are recommended to use BYD genuine parts or fluids for maintenance. As high quality products specifically designed for BYD vehicles, BYD genuine parts or fluids allow optimum operation of your vehicle.

Downloaded from www.Manualslib.com manuals search engine

M6 Maintenance Schedule

Item \ Interval			Odometer reading or number of months														
	×1,000 (km)		3	8	13	18	23	28	33	38	43	48	53	58	63	68	73
	Number of months		First Service	6	9	12	15	18	21	24	27	30	33	36	39	42	45
Engine and transmission																	
1 Inspect the ribbed belt for crack, debris and abnormal wear, and adjust its tension			I		I		I		I		R		I		I		I
2 Replace the engine timing belt	483QA/QB engine		Inspect the belt every 20,000 km; replace it every 80,000 km; replace it earlier if using this vehicle under harsh conditions														
	4G69 engine		Inspect the belt every 20,000 km; replace it every 100,000 km; replace it earlier if using this vehicle under harsh conditions														
3 Inspect the ignition cable for damage			I		I		I		I		I		I		I		I
4 Inspect and replace the spark plug	Under normal conditions	Regular spark plug	Replace it every 20,000 km														
		Iridium spark plug	Replace it every 80,000 km														
	Under harsh conditions		Replace it earlier according to specific conditions														
5 Inspect the crankcase ventilation system (PCV valve and ventilation hose)			I		I		I		I		I		I		I		I
6 Inspect the coolant pipe for damage and inspect whether the pipe connector is fastened tightly			I		I		I		I		I		I		I		I
7 Inspect the coolant level in the overflow			I		I		I		I		I		I		I		I

Downloaded from www.Manualslib.com manuals search engine

Item \ Interval		Odometer reading or number of months														
	×1,000 (km)	3	8	13	18	23	28	33	38	43	48	53	58	63	68	73
	Number of months	First Service	6	9	12	15	18	21	24	27	30	33	36	39	42	45
reservoir																
8 Replace the engine coolant		Replace it every 2 years or every 40,000 km														
9 Replace the air filter element	Under normal conditions	Clean it every 5,000 km, replace it every 10,000 km														
	Under harsh conditions	Inspect it regularly and make replacement earlier if necessary														
10 Change engine oil	Under normal conditions	R: Every 5, 000 km or every 6 months														
	Under harsh conditions	R: Every 3,000 km														
11 Replace the oil filer	Under normal conditions	R: Every 5, 000 km or every 6 months														
	Under harsh conditions	R: Every 3,000 km														
12 Inspect the battery		I		I		I		I		I		I		I		I
13 Inspect the engine idling		I		I		I		I		I		I		I		I
14 Inspect the ignition timing		I				I				I				I		
15 Inspect and adjust the valve clearance		I		I		I		I		I		I		I		I
16 Inspect the exhaust pipe connector for leak		I		I		I		I		I		I		I		I
17 Inspect the throttle body cable		I		I		I		I		I		I		I		I
18 Throttle body		Replace it every 10, 000 km														
19 Fuel injection nozzle		I				I				I				I		
20 Inspect the oxygen sensor		I		I		I		I		I		I		I		I
21 Inspect three-way catalytic converter		I		I		I		I		I		I		I		I

Downloaded from www.Manualslib.com manuals search engine

Item \ Interval		Odometer reading or number of months														
	×1,000 (km)	**3**	**8**	**13**	**18**	**23**	**28**	**33**	**38**	**43**	**48**	**53**	**58**	**63**	**68**	**73**
	Number of months	**First Service**	**6**	**9**	**12**	**15**	**18**	**21**	**24**	**27**	**30**	**33**	**36**	**39**	**42**	**45**
22 Fuel filter		Replace it every 10, 000 km or every 6 months														
23 Fuel tank cap, fuel pipe and connector		I				I				I				I		
24 Carbon canister		I		I		I		I		I		I		I		I
25 Inspect and change the manual transmission fluid	Under normal conditions	I	R			R		I		R		I		R		I
	Under harsh conditions	R: Replace it earlier according to specific conditions														
26 Inspect and refill the automatic transmission fluid	Under normal conditions	Replacement is not necessary, inspect and refill it every year or every 20, 000 km														
	Under harsh conditions	Replace it every 40, 000 km														
Chassis and vehicle body																
27 Inspect and tighten the fixing screws of the chassis		I		I		I		I		I		I		I		I
28 Brake pedal and parking brake		I		I		I		I		I		I		I		I
29 Brake pad and brake disc		I		I		I		I		I		I		I		I
30 Brake fluid		I	I	I	I	I	I	I	I	R	I	I	I	I	I	I
31 Brake system pipeline and hoses		I		I		I		I		I		I		I		I
32 Power steering fluid		I	I	I	I	I	I	I	I	R	I	I	I	I	I	I
33 Steering wheel and tie rod		I		I		I		I		I		I		I		I
34 Drive shaft dust cover		I		I		I		I		I		I		I		I
35 Ball pin and dust cover		I		I		I		I		I		I		I		I

Downloaded from www.Manualslib.com manuals search engine

Item \ Interval	Odometer reading or number of months														
	×1,000 (km)	3	8	13	18	23	28	33	38	43	48	53	58	63	68	73
	Number of months	First Service	6	9	12	15	18	21	24	27	30	33	36	39	42	45
36 Front and rear suspension		I		I		I		I		I		I		I		I
37 Tire and inflation pressure		I	I	I	I	I	I	I	I	I	I	I	I	I	I	I
38 Check the alignment of the front wheel and rear wheels		I		I		I		I		I		I		I		I
39 Inspect the wheel bearing clearance		I		I		I		I		I		I		I		I
40 Inspect the clutch system functionality and adjust the pedal travel		I		I		I		I		I		I		I		I
41 Clutch fluid (interchangeable with brake fluid)		I	I	I	I	I	I	I	I	R	I	I	I	I	I	I
42 Clutch system pipes and hoses		I		I		I		I		I		I		I		I
43 Cooling or heating system		I		I		I		I		I		I		I		I
44 A/C system air filter		I		R		R		R		R		R		R		R
45 Refrigerant of A/C system		I		I		I		I		I		I		I		I
46 Check the SRS airbag system		I		I		I		I		I		I		I		I
47 Inspect the vehicle body for damage		Every year														

Downloaded from www.Manualslib.com manuals search engine

Note: description of symbols in Table 1

I=make inspection, adjustment or replacement if necessary; R=make replacement, modification or lubrication

2. The oil filter replacement interval can be shortened according to the specific engine conditions.

Harsh conditions refers to any of the followings:

(1) If the vehicle is frequently used in dusty area or exposed to salty air.

(2) If you frequently drive the vehicle on rugged roads, in water or in mountainous region.

(3) If the vehicle is frequently used in cold weather.

(4) If you frequently let the engine idling for a long period or make short-trip driving in cold weather.

(5) If the brakes are frequently used, especially for hard braking.

(6) If the vehicle is frequently used as a trailer.

(7) If the vehicle is used as a taxi.

(8) When the temperature is over 32 °C, if driving in busy traffic accounts for 50% or above of the total driving time.

(9) When the temperature is over 30 °C, if driving at a speed of 120km/h or above accounts for 50% or above of the total driving time.

(10) If the vehicle is frequently overloaded in driving.

This maintenance schedule lists the minimum maintenance requirements to ensure the normal vehicle operation. As the driving conditions may vary in different regions, additional maintenance may be required.

Required Maintenance Record

After each scheduled service, please request the technician to record all the required items in the maintenance record. You should keep all maintenance receipts.

Downloaded from www.Manualslib.com manuals search engine

Chapter 7 Part Maintenance

Engine Compartment View.....7-2
Do-It-Yourself Maintenance Precautions 7-3
Jacking Points 7-5
Engine 7-6
Chassis 7-11
Electric Appliances 7-18
Vehicle Body.....7-23

Downloaded from www.Manualslib.com manuals search engine

Engine Compartment View

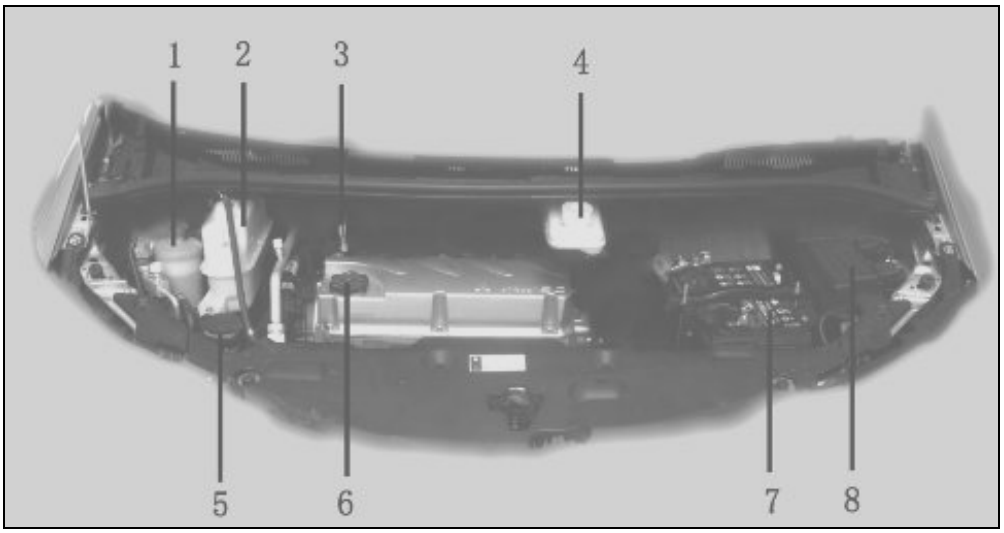

1. Power steering fluid reservoir
2. Engine coolant reservoir
3. Engine oil dipstick
4. Brake fluid reservoir
5. Windshield washer fluid reservoir
6. Engine oil filler cap
7. Battery
8. Distribution box

Downloaded from www.Manualslib.com manuals search engine

Do-It-Yourself Maintenance Precautions

If you perform maintenance yourself, be sure to follow the correct procedure given in this chapter.

Improper and incomplete maintenance will both affect the normal operation of the vehicle.

Only the basic maintenance you can perform by yourself is described in this chapter. But some maintenance items must be performed by professional technicians with special service tools.

During operation, you must take due care to prevent accidental injury. Please strictly follow these precautions:

⚠ CAUTION

- When the engine is running, keep hands, clothing and tools away from the moving fan and engine drive belts. (Don't wear rings, watch or necktie when performing maintenance.)
- Many parts of the vehicle, such as engine, radiator, exhaust manifold and spark plug cover, are very hot after driving. Be careful not to touch the hot parts. The engine oil and other fluids may also be very hot.
- When the engine is hot, don't remove the radiator cover or loosen the drain plug to avoid burning injury.
- To prevent fire, keep spark or flame away from the fuel or battery.
- Handle the battery with extreme care. The battery contains toxic and corrosive sulfuric acid.
- Never get under the vehicle when it is supported by the jack alone. If you have to do so, always support the vehicle with solid support.
- Be sure to turn off the ignition switch when operating around the cooling fan or radiator grid. With the ignition switch at ON, the cooling fan may start running automatically if the engine coolant is hot or if the A/C system turns on.
- Always wear safety glasses to prevent flying/falling objects or fluid from entering your eyes.
- The used oil and oil filter must be proposed properly. Don't dispose of oil by putting it in the trash, pouring in on the ground or into sewers. If you have a problem disposing of your used oil, ask your dealer or a service station for help.
- Be careful when refilling the

Downloaded from www.Manualslib.com manuals search engine

brake fluid since it is harmful to the skin and eyes. In case that it gets in contact with your skin or eyes accidentally, immediately flush the affected area with water. Get medical attention if irritation persists.

NOTICE

- Note that the battery and ignition cable are charged with high voltage and high current. Take due care to prevent short circuit.
- If the coolant overflows, flush it with water to prevent damage to the parts and paint surface.
- Prevent dirt or any other object from entering the spark plug hole.
- Don't pry the external electrode using the spark plug as the center.
- Only use the specified spark plug. Using other spark plugs may cause damage, reduced engine performance or radio interference to other electronic devices on the vehicle.
- Don't reuse an iridium electrode spark plug by cleaning it or adjust the spark plug clearance.
- In case of an automatic transmission, don't overfill the transmission fluid. This may cause powerless acceleration or damage to the transmission parts.
- If the brake fluid overflows, flush it with water to prevent damage to the parts and paint surface.
- Don't drive the vehicle when the air filter is removed. This may cause excessive engine wear. In addition, backfire may occur and cause fire in the engine compartment.
- During maintenance, prevent the wiper from scratching the windshield.
- Before closing the hood, make sure no tool or cloth is left in the engine compartment.

Downloaded from www.Manualslib.com manuals search engine

Jacking Points

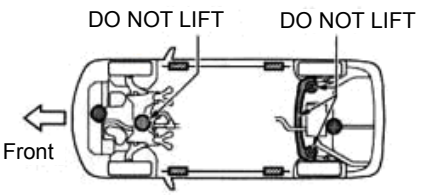

It is prohibited to place the jack at the locations indicated by ● in the figure above.

Front – suspension crossbeam

Rear – bottom plate

Position the jack at the locations indicated by ■ in the figure above.

⚠ CAUTION

When jacking, be sure to following the instructions below to reduce the possibility of severe injury or even death:

- Follow the manufacturer's instructions on using the jack.
- Don't put any part of your body under the vehicle supported by the jack. Otherwise, personal injury may occur.
- Don't start or run the engine while the vehicle is supported by the jack.
- Stop the vehicle on a level and solid ground, firmly set the parking brake and put the transmission in "P" (automatic) or N (manual) gear. If necessary, block both the front and rear of the wheel that is diagonally opposite from the jack position.
- Make sure to locate the jack properly at the jack point. Raising the vehicle with an improperly positioned jack may damage the vehicle or allow the vehicle to fall off the jack and cause personal injury.
- Never get under the vehicle when it is supported by the jack alone. If you have to do so, always support the vehicle with safety stands.
- Don't raise the vehicle with someone in it.
- When raising the vehicle, do not place any objects on top of or underneath the jack.

NOTICE

- An improperly positioned jack will cause damage to the vehicle.

Downloaded from www.Manualslib.com manuals search engine

Engine

Engine Oil Consumption

Engine oil function

The primary function of the engine oil is to lubricate and cool moving parts of the engine, so as to keep the engine running normally.

Engine Oil Consumption

Oil consumption is expected in all engines. Under normal conditions, oil consumption can be attributed to the following reasons:

- Engine oil is used to lubricate the cylinder, piston and position ring. When the piston moves downward in the cylinder, a thin oil film will form on the cylinder wall. When the vehicle is decelerating, high negative pressure generated in the engine will suck some oil into the combustion chamber. This oil as well as part of the oil film left on the cylinder wall is burned during the high temperature combustion process.
- Engine oil is also used to lubricate the intake valve stems. Some of this oil is sucked into the combustion chamber together with the intake air and is burned along with the fuel. High temperature exhaust gases also burn the oil used to lubricate the exhaust valve stems.

The amount of engine oil consumed depends on the viscosity and quality of the oil and the conditions under which you are driving.

Oil consumption will be more during high speed driving and frequent acceleration and deceleration.

A new engine consumes more oil, and proper running-in process is necessary to seat the mating surface of the pistons, piston rings and cylinder walls.

When judging the amount of oil consumption, note that the oil may become diluted and make it difficult to judge the true level accurately.

For example, if a vehicle is used for repeated short trips, and consumes a normal amount of oil, the dipstick may not show any drop in oil level at all, even after 1000km or more.

This is because the oil is gradually diluted by fuel or moisture, making it appears that the oil level has not changed.

The diluting ingredients will evaporate in high speed driving, such as on an expressway. That is why sometimes you will find out the oil is excessively consumed after driving at high speed.

Downloaded from www.Manualslib.com manuals search engine

Importance of Engine Oil Level Check

One of the most important points in proper vehicle maintenance is to keep the engine oil at the optimum level so that oil function will not be impaired. Therefore, it is essential that the oil level be checked regularly. It is recommended to check the oil level every time you refuel the vehicle.

NOTICE

- Check the engine oil level regularly. If there is insufficient oil in the engine, it will cause severe damage.

For details on checking the oil level, refer to the next section "Check Oil Level".

Check Oil Level

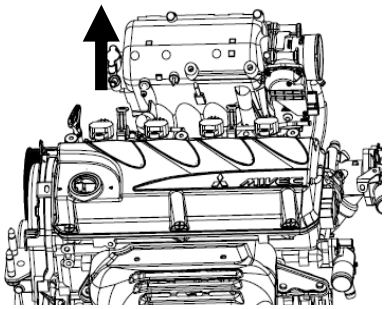

Mitsubishi 4G69S4M engine dipstick (white ring)

There are 2 holes at the upper and lower limit of Mitsubishi 4G69S4M engine dipstick. The oil level must fall between the upper and lower holes.

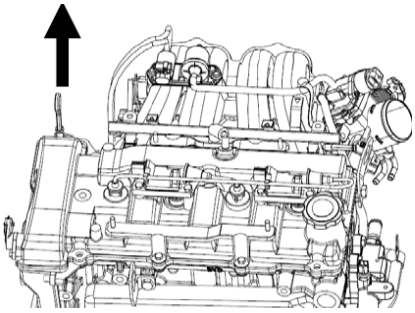

BYD483QB engine dipstick (yellow ring)

The upper and lower limits of the BYD483QB engine dipstick are indicated with two lines: F (Full) and L (Low). The oil level must fall between the upper and lower lines.

Downloaded from www.Manualslib.com manuals search engine

When the engine is at the normal operating temperature, turn if off and check the oil level with a dipstick.

1. To get accurate reading, make sure the vehicle is on level ground. Wait for a few minutes so that the oil has sufficient time to drain back to the sump.
2. Pull out the dipstick and wipe it clean with a cloth.
3. Reinsert the dipstick completely to get the most accurate reading.
4. Pull out the dipstick and check the oil level. Don't turn it upside down to look at it. The oil level must fall between the F line and L lines.

NOTICE

- Prevent the oil from dripping on any vehicle part.

Add Oil

If the oil level is below or slightly above the L line, you must add oil of the same specification to the engine.

Remove the oil filler cap to add oil. Don't overfill oil. You can use a funnel when adding oil.

For oil capacity of the vehicle, see "Maintenance Specifications" in Chapter 8.

After adding enough oil to get the oil level in normal range, put back the filler cap and tighten it manually.

BYD483 engine oil filler cap

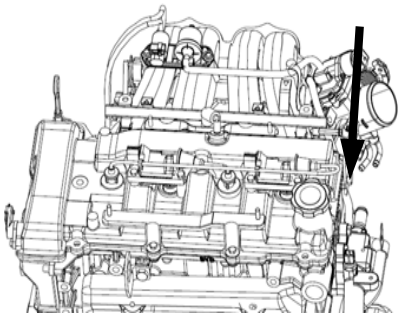

Mitsubishi 4G69S4M engine oil filler cap

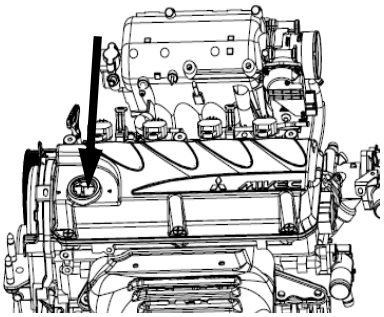

Downloaded from www.Manualslib.com manuals search engine

NOTICE

- Prevent the oil from dripping on any vehicle part.
- Don't add too much oil, otherwise the engine may be damaged. Check the oil level again with the dipstick after adding oil.

Recommended Oil to Use

Engine oil is very important to maintain the performance of the engine and extend its service life. Only use clean, high quality oil. For optimum operation of the vehicle, we recommend you to use BYD genuine engine oil.

- API class: SG or above
- SAE viscosity class:

  5W-30 (above -30°C)

  10W-30/40 (year around in the south and summer in the north, above -15°C)

Recommended oil viscosity (SAE)

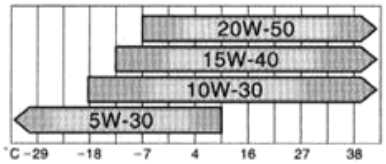

Temperature forecast range before next oil change

In extreme cold weather, you are recommended to use SAE 5W-30 as it provides the best performance. Oil of SAE 10W-30 or above makes the engine hard to start.

Oil Identification Marks

API Service Symbol

ILSAC Certification Mark

Downloaded from www.Manualslib.com manuals search engine

API Certification Marks are added to some oil containers to help you select the oil you should use.

The API Service Symbol is located anywhere on the outside of the container.

The top portion of the label shows the oil quality by API (American Petroleum Institute) designations, such as SM. The centre portion of the label shows the SAE viscosity class, such as SAE 10W-30. Energy-Conserving shown in the lower portion indicates that the oil has fuel saving capabilities.

The ILSAC (International Lubricant Standardization and Approval Committee) Certification Mark is displayed on the front of the container.

Always use oil with API class SG or higher. The ingredients of such oil can help save fuel.

Check Engine Coolant Level

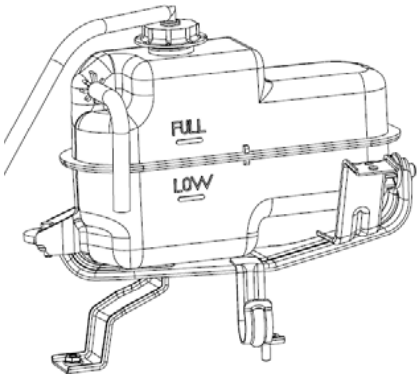

Check the coolant level in the transparent coolant reservoir when the engine is cold. The coolant level must fall between the FULL and LOW line. (Refer to the next section "Which Coolant to Use" to choose a coolant.)

The coolant level in the reservoir varies with the engine temperature. However, if the coolant level is at or below the LOW line, add coolant until the coolant level reaches the FULL line.

If the coolant level drops within a short time after adding, there may be a leak. Conduct a visual inspection of the radiator, hoses, radiator cover, drain plug and pump.

If no leak is identified, contact a BYD service station to measure the radiator cover pressure and check for cooling system leaks.

⚠ CAUTION

- Don't drive in deep water. Large amount of water entering the engine compartment may cause damage to the engine and/or electric components. When the engine is hot, don't touch the radiator or condenser to avoid burning injury.

Downloaded from www.Manualslib.com manuals search engine

Which Coolant to Use

Using inappropriate coolant may cause damage to the engine cooling system.

Only use the coolants authorized by BYD. Select the right type of coolant suitable to the ambient temperature of your region.

⚠ CAUTION

- Don't add plain water to your engine, otherwise the cooling system may get damaged.

Contact a BYD authorized service station for details.

Check Radiator & Condenser

If the radiator or condenser is very dirty, or if you have any problem on checking the radiator or condenser, please have the vehicle serviced by a BYD service station.

NOTICE

- Don't service the radiator or condenser by yourself to prevent damage to them.

Chassis

Check Power Steering Fluid

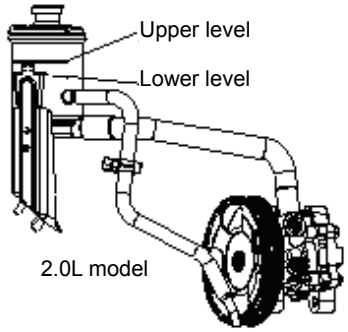

Check the power steering fluid level at least once a year. To check the fluid level, the vehicle must be on level ground and the engine must be cold. The fluid level must fall between the UPPER LEVEL and LOWER LEVEL marks on the reservoir. If the fluid level is below the LOWER LEVEL, add the specified power steering fluid to the UPPER LEVEL.

Downloaded from www.Manualslib.com manuals search engine

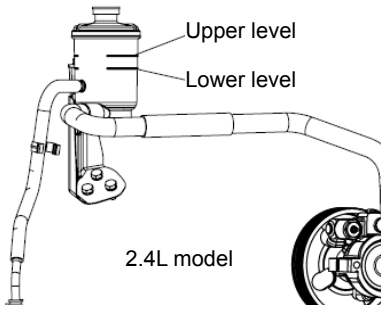

The fluid level may drop if there is a leak in the system. In this case, regularly check the fluid level and have the system inspected and repaired.

NOTICE

- Only use Mobil ATF DEXRON®-III power steering fluid or other ATF fluids that meet DEXRON-III standard. Failure to use the proper fluid can cause damage to the power steering system.
- Add the fluid slowly to prevent overflow. If overflow do occur, remove the excessive fluid immediately. The parts in the engine compartment may be damaged if contaminated by the power steering fluid.
- If you have any problem on checking or adding the power steering fluid, contact a BYD service station.

NOTICE

- Don't turn the steering wheel to full left and full right and lock it there; otherwise the power steering pump may be damaged.

Check Tire Pressure

Keep the tires inflated to the proper pressure.

See specifications in Chapter 8 "Tires" for the recommended tire size and pressure.

Check the tire pressure once a week or at least monthly. You must check the pressure of the spare tire as well.

Improper tire pressure will cause increased fuel consumption, reduced drive comfort, premature tire wear and decreased driving safety.

If the tires lose air quickly, have your vehicle checked by a BYD service station.

Follow the instructions below when checking the tire pressure:

- Check the tire pressure when the tires are cold. To get an accurate reading, you should check your tires when your vehicle has not

Downloaded from www.Manualslib.com manuals search engine

been driven more than 1.5 km or has been parked for at least 3 hours.

- Use a tire pressure gauge. Empirical judgment of the tire pressure without using a tire pressure gauge may be significantly different with the actual pressure. In addition, few pounds of pressure may cause significant difference in ride comfort and drivability.
- Don't deflate the tires after driving. It is normal that the tire pressure increases after driving.
- Make sure to install the tire valve caps. They can prevent air leakage and keep dirt and moisture out of the valve core. If a cap is missing, have a new one put on as soon as possible.

CAUTION

Keep your tires inflated to the proper pressure. A severe accident may be caused if any of the following occurs:

Low tire pressure (underinflated) may cause:

- Excessive tire wear
- Abnormal tire wire
- Reduced steering control
- Air leakage due to tire overheating
- Reduced sealing performance along the tire edge
- Wheel deformation or separation of tire and wheel
- High tire pressure (overinflated) may cause:
- Reduced steering control
- Excessive wear of the center tread
- Increased possibility that tires may be damaged by bumps on the road.

Tire Rotation

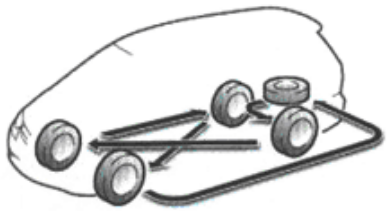

The purpose of regular rotation is to achieve more uniform wear and longer service life for all tires. We recommend you to rotate the tires every 10,000 km. However, the most appropriate time to rotate the tires must be determined by your driving habits and road conditions.

The rotation pattern is shown in the figure above.

Check for unusual wear or damage before rotating the tires. Improper tire pressure or wheel alignment, unbalanced wheels, and frequent

Downloaded from www.Manualslib.com manuals search engine

braking will cause unusual tire wear.

When storing a used radial ply tire, snow tire or rubber studded tire, mark its direction of rotation so that you can reuse it with the same rotation direction in the future. Tires must be stored in a dry and cool place.

⚠ CAUTION

- The spare tire isn't included in the rotation. It is intended only for short trips.

Inspection and Replacement of Tires

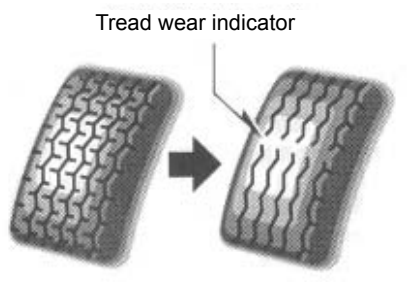

Check Tires

Check the tread wear indicators on a tire. If the tread wear indicators are visible, the tire must be replaced.

Tread wear indicators are built into each tire. If these indicators appear, replace the tire. These indicators appear when your tires have only 1/16 inch (1.6 mm) or less of tread remaining. If the wear indicators appear in two or more adjacent grooves, the tire must be replaced. The thinner tread, the greater the possibility of tire skidding is.

If you can see cut, crack, cord fabric, bulge or any other damage in a tire, it must be replaced.

If the tire loses air quickly or has any damage that cannot be repaired well because of the size or location of the damage, it must be replaced. If you have any doubts, contact a BYD authorized service station.

If air leakage occurs in the tire while driving, stop driving immediately. Even a short travel may cause irreparable damage to the tire.

A tire must be replaced after 6 years due to aging even if there is no apparent damage.

Tires deteriorate over time, even if they are not used or driven on.

The six-year rule also applies to the spare tire and tires in storage.

Downloaded from www.Manualslib.com manuals search engine

Replace Tires

When replacing a tire, only use a new tire with the same size, load range, speed rating and construction type.

Using a tire with other size or structure will adversely affect the drivability, ride comfort, calibration of speedometer/odometer, ground clearance and the clearance between the vehicle body and tire/snow chain.

⚠ CAUTION

Follow the instructions below. Failure to abide by them may cause a server accident or even death.

- It is dangerous to mix tires of different construction (bias, bias-belted or radial); otherwise you could get into steering trouble and even lose control of the vehicle.
- Only use the tires of the recommended size. Tires of other size may cause steering trouble and even losing control of the vehicle.
- Don't mix tires of different brands, size, construction and tread patterns. Mixing tires may cause steering trouble and even losing control of the vehicle.

Never mount a used tire on your vehicle.

Using a tire with unknown past use is very dangerous.

You are recommended to replace all four tires at the same time, or at least you must replace the two tires on the same axle.

See "If You Have a Flat Tire" in Chapter 6 for tire replacement procedure.

Keep the wheels in balance after replacing tires.

Unbalanced tire may adversely affect the drivability and tire life. The tire may lose balance during normal use. Therefore, check the wheels irregularly to ensure they are in good balance.

When replacing a tubeless tire, the tire valve must also be replaced.

Downloaded from www.Manualslib.com manuals search engine

Mounting Snow Chains

When to Use Snow Chains

Snow chains can be used when you drive on snow or icy roads.

On wet or dry surfaces, the normal tires provide larger traction than tires with snow chains.

Choosing Snow Chains

Choose a proper tire chain size.

Refer to the applicable local laws on using snow chains on different roads before you choose the snow chains.

NOTICE

- Improper snow chains may cause damage to the vehicle body.

Mounting Snow chains

Mount the snow chains as firmly as possible on the front wheels. Never mount snow chains on rear wheels. Retighten the snow chain after driving for 0.5-1.0km.

Follow the manufacturer's instruction when installing the snow chains.

If you have installed wheel covers, remove them before mounting the snow chains. Snow chains will scratch the wheel covers.

CAUTION

- When driving with snow chains, do not exceed 50 km/h or the speed limit recommended by the snow chain manufacturer, whichever is lower
- Drive carefully and avoid bumps, holes and sharp turns, which may cause the vehicle to bounce.
- Avoid sharp turns or locked-wheel braking, which may adversely affect vehicle handling.
- Slow down prior to making a turn. Otherwise you may lose control of the vehicle and cause an accident.

NOTICE

- Don't install tire chains to the spare tire that is only intended for temporary use. Otherwise the vehicle or tire may get damaged.

Downloaded from www.Manualslib.com manuals search engine

Replace Wheels

When to Replace a Wheel

If you have wheel damage such as bending, cracks or heavy corrosion, the wheel should be replaced.

Failure to replace a damaged wheel may cause the tire slipping off or loss of vehicle control.

Choose a New Wheel

When replacing a wheel, make sure the new wheel has the same load capacity, diameter, rim width and offset with the damaged wheel.

Have the wheel alignment done at a BYD service station after replacing the wheel.

A wheel of a different size or type may adversely affect handling, wheel and bearing life, brake cooling, speedometer/odometer calibration, braking performance, headlight aiming, bumper height, vehicle ground clearance, and tire or snow chain clearance to the vehicle body and chassis.

⚠ CAUTION

Strictly follow the instructions below. Otherwise an accident may occur resulting in severe injury or even death.

- Don't use a wheel that is in non-compliance with the specifications recommended by the manufacturer. This may adversely affect the vehicle handling and cause loss of vehicle control.

Precautions on Aluminum Wheels

- After installing an aluminum wheel, check whether the wheel nuts are tightened properly after the first 1,600 km of driving.
- After rotation, repair or replacement of tires, check whether the wheel nuts are tightened properly.
- When using snow chains, be careful not to damage the aluminum wheels.
- Only use BYD wheel nuts and wrench designed for the aluminum wheels.
- To balance your wheels when using snow chains, only use BYD balance weights and a plastic or rubber hammer.
- As with any wheel, regularly check the aluminum wheels for damage. If damaged, replace it immediately.

Suspension and Chassis

⚠ CAUTION

- Don't modify the suspension or chassis with gaskets, springs or other devices. This may adversely affect the vehicle handling and cause loss of vehicle control.

Downloaded from www.Manualslib.com manuals search engine

Electric Appliances

Checking Battery Conditions

⚠ CAUTION

Abide by the instructions below when handling the battery since it generates explosive and flammable hydrogen.

- Prevent the battery from generating spark when using tools.
- Don't smoke or use anything that produce an open flame or spark near the battery.
- The battery electrolyte contains toxic and corrosive sulfuric acid.
- Prevent the electrolyte from contacting your eyes, skin or clothing.
- Don't drink the electrolyte by mistake.
- Wear safety glasses when operating around the battery.
- Keep children away from the battery.

Emergency Handling

- If any electrolyte gets into your eyes, flush your eyes with clean water for at least 15 minutes and get immediate medical attention. If possible, continue to apply water with a sponge or cloth to the affected area while on the way to the hospital.
- If electrolyte gets on your skin, thoroughly wash the contacted area. Get immediate medical attention if irritation persists.
- If electrolyte gets on your clothing, it may penetrate to contact your skin. Take off the contaminated clothing and handling the affected area as described above in necessary.
- If you drink the electrolyte by mistake, drink large quantities of water or milk and take raw eggs, plant oil or milk containing magnesium oxide. Get immediate medical attention.

Downloaded from www.Manualslib.com manuals search engine

Appearance Inspection

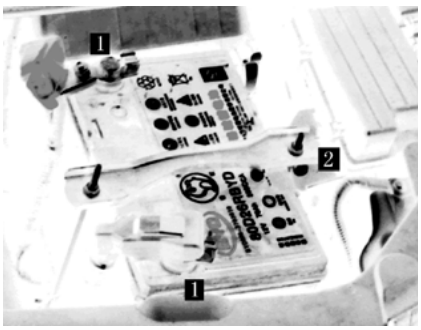

1. Terminals
2. Clamps

Check whether the battery connection is corroded, loose or cracked, and whether the clamp is loose.

a. If the battery is corroded, wash it with a solution of warm water and baking soda. Coat the outside of the terminal with grease to prevent further corrosion.
b. If a terminal is loose, tighten the clamp nut – but do not overtighten.
c. Tighten the battery clamp to the extent that the battery can be firmly held in place. Overtightening may damage the battery case.

NOTICE

- Before performing maintenance, be sure to turn off the engine and all electric accessories.
- When checking the battery, the first step is to remove the grounding cable from the negative (-) terminal and the last step is to reinstall it in place.
- Be careful not to cause a short circuit with tools.
- Don't get any liquid into the battery when washing it.

Checking Battery Electrolyte

Checking by Indicators

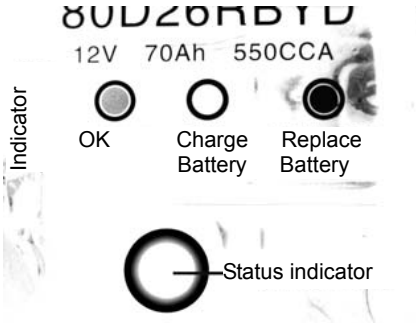

You can determine the battery conditions by the battery status indicator. See the text on the battery case for the meaning of indicator statuses.

⚠ CAUTION

- Replace the battery if the electrolyte is insufficient. Don't add electrolyte by yourself.

Downloaded from www.Manualslib.com manuals search engine

Checking & Replacing Fuses

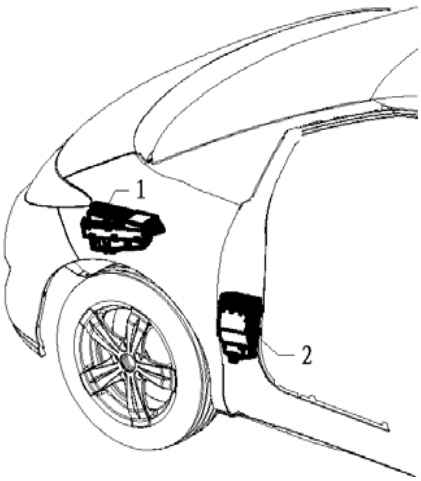

1 Engine compartment

2 Left instrument distribution box

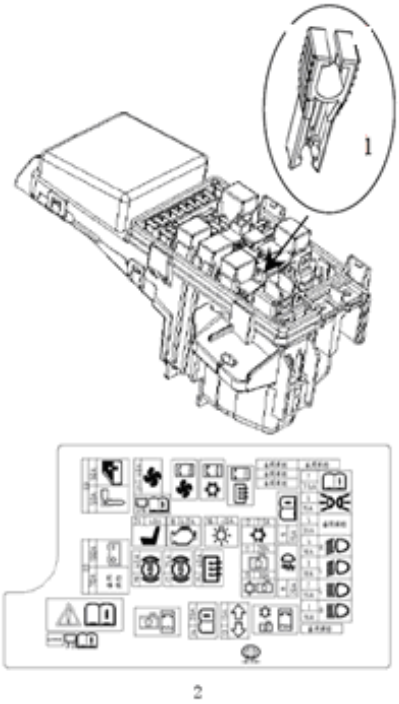

1. Puller
2. Spare fuses

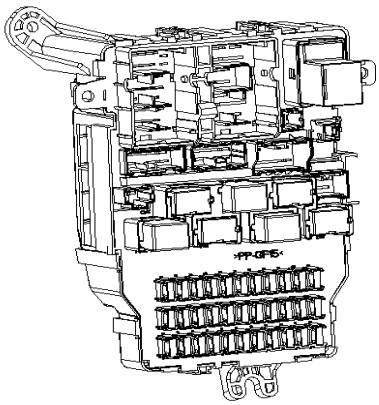

Left instrument panel distribution box

Downloaded from www.Manualslib.com manuals search engine

If the headlights or other electric components do not work, check the fuses. The blown fuses must be replaced.

1. Turn off the ignition switch and open the fuse box cover.

Find out which fuse is causing the problem. The fuse box cover indicates the name of the circuit for each fuse.

2. Make sure the failed component is turned off. Pull the suspected fuse straight out with a puller and check it. If the fuse has blown, install a new fuse in place.

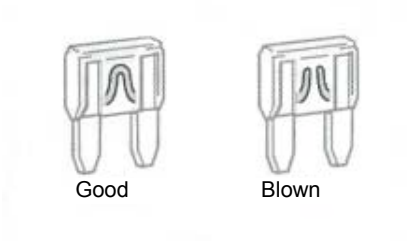

a. Check the fuse carefully. If the fuse wire is broken, the fuse should be replaced. If you are not sure whether the fuse is blown, such as in dim light, you can replace it with another fuse with the same rating.

b. Never replace a fuse with anything but another fuse of the rating indicated on the fuse cover.

If a spare fuse is not available under emergencies, you can remove the fuse with the same rating for unnecessary components, such as interior lights, and use it as the temporary replacement fuse.

If a replacement fuse with the same rating is not available, you can use a fuse which has a rating slightly lower than the blown fuse. A replacement fuse with a lower rating may blow out quickly, but this doesn't mean there is a problem. Install a replacement fuse with the same rating as soon as possible, and put back the temporary replacement fuse in its original place.

You are recommended to keep a complete set of fuses in the vehicle for emergency use.

If the new fuse with the same rating blows out quickly, fault may exist in the electric system. Contact a BYD service station to check the vehicle.

⚠ CAUTION

- Never use a fuse with high rating or anything else as substitute for a blown fuse. It may cause severe wring damage and a possible fire.

Downloaded from www.Manualslib.com manuals search engine

Adding Washer Fluid

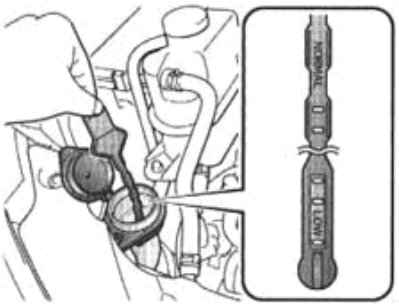

If any washer doesn't work, the washer fluid reservoir may be empty. Please check the fluid level on the level gauge. If the fluid level is near LOW level, add washer fluid.

You may use plain water as washer fluid. However, in cold days when temperature is below the freezing point, antifreeze must be contained in the washer fluid. This product is available at your BYD dealer and most auto parts stores. Follow the manufacturer's instructions on the mixture ratio of antifreeze and water.

NOTICE

- Do not use engine antifreeze or any other substitute because it may damage your vehicle's paint.

Replacing Light Bulbs

If you need to replace any light bulb, have it done by a BYD service station.

Downloaded from www.Manualslib.com manuals search engine

Vehicle Body

Antirust Protection Maintenance

Proper maintenance helps protect the vehicle from rusting for long term.

The most common causes of vehicle rusting are:

- Road salt, alkali, dust or moisture that is accumulated underneath the vehicle;
- Damage of paint or protective coating by stones, gravel or minor scrape, which leave unprotected metal exposed to corrosion.

The corrosion process becomes faster in the cases listed below. Pay special attention to keeping the underside of the vehicle clean, and repair damage in the paint or protective coating as soon as possible.

- Roadway dust containing salt, alkali and chemicals will accelerate the corrosion. In industrial districts or sea coast regions, the air contains salt particles.
- High humidity will accelerate the corrosion, especially when the temperature is just above freezing point.
- Wet or damp on certain parts of your vehicle for an extended period of time, may cause corrosion even though other parts of the vehicle may be dry.
- High temperatures will accelerate corrosion of those parts which are prevented from drying due to lack of proper ventilation.

Follow the instructions below to protect the vehicle from corrosion:

Wash your vehicle frequently. Regular washing helps keep the vehicle body clean. Be sure to observe the guides below on vehicle washing.

- If you drive on dusty road or live near the ocean in winter, wash your chassis at least once a month to minimize corrosion.
- High pressure water or steam is effective for cleaning the vehicle's underside and wheel covers. Pay particular attention to these areas as it is difficult to see all the mud and dirt. It will do greater harm if you simply wet the mud and debris without removing it. The lower edge of doors, rocker panels and frame members have drain holes. Prevent the holes from being blocked with dirt as trapped water in these areas can cause corrosion.
- When the winter is over, you had better wash the underside of your vehicle thoroughly.

See "Washing and Waxing" for more tips.

Keep paint and trim in good

Downloaded from www.Manualslib.com manuals search engine

conditions. Chips or cracks in the paint should be repaired immediately to prevent corrosion. If the paint peels off and leave bare metal exposed, contact a BYD service station to repair the paint surface.

Check the interior of your vehicle. Water and dirt may accumulate under the floor mats and cause corrosion. Regularly check under the mats to make sure the area is dry. Be particularly careful when transporting chemicals, cleansers, fertilizers, etc; these should be transported in proper containers. If a spill or leak should occur, immediately clean and dry the area.

Use mud guards on your wheels. If you drive on dusty or gravel roads, mud guards help protect your vehicle. Full-size mud guards, which come as near to the ground as possible, are the best. We recommend that the area where the mud guards are installed be treated to resist corrosion.

Keep your vehicle in a well ventilated garage or a covered parking lot. Do not park your vehicle in a damp, poorly ventilated garage. If you wash your vehicle in the garage, or if you park it in the garage after driving in rainy or snow weather, your garage may become damp and cause corrosion. Even if the garage remains dry, poor ventilation may also cause corrosion in a damp vehicle.

Washing and Waxing

Washing Your Vehicle

Wash your vehicle regularly to keep the paint finish clean.

In any of the following cases, wash the vehicle immediately to prevent paint peeling off or corrosion in the vehicle body or parts.

- When driving in a coastal area;
- After you drive on a road applied with antifreeze;
- When the vehicle is stuck with coal tar, resin, bird manure or insect remains;
- After you drive in an area with heavy smoke, coal ash, dust, iron or chemical substance in the air;
- When the vehicle is apparently stained with mud or dust.

Downloaded from www.Manualslib.com manuals search engine

Hand Washing

Park the vehicle in the shade and wait until the vehicle body is not hot to the touch.

⚠ CAUTION

- When cleaning the underside or chassis, be careful not to injure your hands.
- The exhaust pipe is very hot in driving. To prevent burning, don't touch the exhaust pipe until it cools down sufficiently.

1. Rinse off loose dirt with a hose. Remove any mud from the underside of the vehicle and wheel wells.
2. Wash with mild car-washing soap, which should be mixed according to the manufacturer's instructions. Use a soft cotton cloth to clean the vehicle, keeping the cloth wet by dipping it frequently into the wash water. Do not rub hard – let the soap and water remove the dirt.

Plastic wheel ornament cover: plastic components may be easily damaged by interaction with organic solvents. If any organic solvent gets on the wheel ornament cover, rinse off it with water and check the wheel cover for damage.

⚠ CAUTION

- Don't attach a damaged plastic wheel ornament to the wheel. It may fall off while driving and cause an accident.

Aluminum wheels: only use neutral soap or detergent and water.

Plastic bumper: be careful when cleaning the plastic bumper. Don't use abrasive detergent as the bumper faces are soft.

Road asphalt: remove it with turpentine or detergents marked safe for painted surfaces.

NOTICE

- Do not use organics such as petrol, kerosene or strong solvents, which may be toxic or cause damage.
- Don't use a hard brush to clean any part of the vehicle, otherwise it may cause damage.

3. Rinse thoroughly – dried soap leaves streaks. In hot weather you may need to rinse each section right after washing the vehicle.
4. To prevent water streaks, dry the vehicle using a clean soft cloth. Do not rub or press hard, otherwise you may scratch the paint.

Downloaded from www.Manualslib.com manuals search engine

Automatic Washing Station

The vehicle can be washed at an automatic washing station. However, note that certain types of brush, unfiltered washing water and preset washing program may cause scratch to the paint surface. Scratch on the paint will reduce its endurability and gloss level, especially to vehicles in dark colors. The washing station staff will tell you which washing program is best for your vehicle paint.

Waxing Your Vehicle

Waxing helps protect the paint surface from rust and deterioration.

Wax the vehicle at lease once a month or when the water does not bead.

1. Always wash and dry the vehicle before you begin waxing, even if you are using a combination of detergent and wax.
2. Use high quality wax products. If the finish has become extremely weathered, first apply cleaning polish and then wax the vehicle. Carefully follow the manufacturer's instructions and precautions. Both chromed surface as well as painted surface should be waxed.
3. Wax the vehicle again when water does not bead, but remains on the surface in large patches.

NOTICE

- Always remove the plastic bumpers if your vehicle is repainted and placed in a high-temperature paint waxing room, otherwise the bumpers may be damaged.

Windshield washer nozzles: make sure the nozzles are not clogged with wax. If clogging does occur, have your vehicle repaired in a BYD service station.

NOTICE

- Don't clear the clogged nozzle with a pin or similar objects, otherwise it may be damaged.

Exterior lights: do not wax the light exterior. Wax may do harm to the lens of the lights. If wax gets on the light exterior, clear it by wipe or rinse.

Minor chips and cracks in the paint surface should be repaired with quick-drying paint to prevent corrosion.

If any paint imperfection is found out, repaint it as soon as possible to prevent corrosion. To spread the paint evenly, use a painting brush and stir the paint well. Ensure the area is clean and dry. To make the repaired area unnoticeable, apply the paint only to the bare spots. Apply the smallest possible amount and do not paint the surface around the crack or chip.

Downloaded from www.Manualslib.com manuals search engine

Cleaning Vehicle Interior

⚠ CAUTION

- Don't use water to clean the floor. Prevent water from flowing onto the floor when cleaning the exterior or interior. Water on the floor may enter electric devices under the carpet or mat and cause malfunction; it may also cause corrosion in vehicle body.

Carpets

Use high quality foam detergent to clean the carpets.

Vacuum thoroughly first to remove as much dirt as possible. Several types of foam detergents are available: Some are in aerosol cans and others are powder or liquid which can be mixed with water to produce foam. Use a sponge or brush soaked with foam to clean the carpets. Wipe in a circular movement.

Do not apply water – best results are obtained by keeping the carpet as dry as possible. Read and follow the detergent instructions.

Seat Belts

Only use neutral soap and water to clean the seat belts.

Use a cloth or sponge. Check the seat belt and buckles for wear or damage.

NOTICE

- Never use bleaching agents, dyes or abrasives to clean the seat belts – this will reduce the seat belt strength.
- Don't drive the vehicle when the seat belts are wet.

Windows

The windows can be cleaned with any household detergent.

NOTICE

- When cleaning the inside of the rear windshield, do not scratch or damage the heating element or its connector.

A/C Control Panel, Sound System, Instrument Panel and Switches

Clean them with a soft damp cloth.

Dip the cloth in warm water and wipe it to remove dust and dirt.

NOTICE

- Don't use an organic solvent, such as kerosene, alcohol, gasoline, etc. or acid/base solution. These chemicals will cause discoloration, contamination or stripping of

Downloaded from www.Manualslib.com manuals search engine

surface material.

- If you use detergent or polish, make sure it does not contain the chemicals mentioned above.
- If you use liquid detergent when washing the vehicle, prevent the detergent from spilling onto vehicle interior surfaces. The detergent may contain the chemicals mentioned above. Clean the spilled liquid immediately as described above.

Interior Leather Trim

Leather trim can be cleaned with neutral wool detergent.

1. Dip a soft cloth in 5% wool detergent solution and wipe it to remove dirt and dust.
2. Wring the cloth dry. Wipe off the detergent residue with the cloth.
3. Let the leather dry in a place in a well ventilated place. Over moisture may cause leather to harden or shrink.

NOTICE

- If neutral detergent cannot remove the stain, use a detergent that does not contain organic solvents.
- Never use organic solvents, such as kerosene, alcohol, gasoline, etc. or acid/base solution to clean the leather. These materials will discolor the leather.
- Using a nylon brush or artificial fiber cloth will damage the leather texture.
- Dirty leather will cause mildew and mold. Prevent the leather from being stained by grease and keep the trim clean.
- Long exposure to sunlight will make the leather harden or shrink. Try to park the vehicle in the shade, especially in summer days.
- In hot summer, the interior temperature may rise easily, therefore do not place objects made of vinyl plastics or wax on the leather trim. Such object will get stuck on the leather under high temperature.
- Improper cleaning of the leather may cause discoloration or spot damages.

If you have any question on washing the vehicle, please contact the local BYD service station.

Downloaded from www.Manualslib.com manuals search engine

Chapter 8 Maintenance Specifications

Engine Lubrication System....8-2
Automatic Transmission....8-2
A/C System....8-3
Brake System....8-3
Hydraulic Steering System....8-3
Battery....8-3
Tires....8-4
Left Instrument Panel Fuses....8-5

Downloaded from www.Manualslib.com manuals search engine

Engine Lubrication System

BYD483QB Engine

- 3.3 L

Mitsubishi 4G69S4M Engine

- 4.3 L

Variation of engine oil capacity (excluding the oil filter)

BYD483QB Engine

- 3.0 L

Mitsubishi 4G69S4M Engine

- 3.8L

Always use oil with API service class SG or higher since it helps save fuel. The ingredients of such oil can help improve the fuel economy.

Oil class:

- 20W-50 and 15W-40
- API class: SG or above
- 10W-30 and 5W-30
- API SG Energy Conserving, SM Energy Conserving or qualified ILSAC oils.

Recommended oil viscosity (SAE):

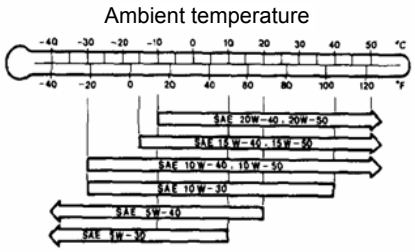

Contact a BYD authorized service station for details.

Automatic Transmission

Automatic transmission fluid specification:

Mitsubishi DiaQueen_ATF_SPIII

You need not change the automatic transmission fluid frequently.

Note: Don't use any ATF fluid other than Mitsubishi DiaQueen_ATF_SPIII. It may reduce gearshift performance, cause stuck transmission and gear shift vibration, resulting in damage to the transmission.

Contact a BYD authorized service store for details.

Downloaded from www.Manualslib.com manuals search engine

Cooling system

Coolant capacity is described in the table below.

Model	Coolant Capacity
G-i, GL-I 483QB	6.4L
GLX-i, GLX-iNAVI 483QB	7.9L
G-i, GL-I 4G69	7.3L
GLX-i, GLX-iNAVI 4G69	8.7L

Coolant specification:

You are recommended to use BYD genuine all season antifreeze/coolant. Don't add any other fluid to it. If this coolant is not available, you can use major brand coolant as temporal substitute as long as the coolant does not contain silicates. Make sure it is a high-quality coolant recommended for aluminum engines. Otherwise, continuous use of non-BYD genuine coolant may cause corrosion and even failure of the cooling system. Drain the cooling system to refill genuine BYD antifreeze/coolant as soon as possible. Don't mix different brands of coolant.

Contact a BYD authorized service store for details.

A/C System

Refrigerant specification:

- HFC-134a
- Capacity: 580g
  850g (with rear A/C)

Brake System

Brake fluid specification:

- DOT3
- Capacity: some 1.0L

Hydraulic Steering System

Steering fluid specification:

- ATF DEXRON III
- Capacity: some 1.1L

Battery

Constant-Current Charging

Above 12.5V: constant-current charging at 7A for 3 hours

12.0-12.5V: constant-current charging at 7A for 6 hours

11.0-12.0V: constant-current charging at 7A for 10-12 hours

Below 11.0V: 1. Constant-current charging at 3.5A for 8-16 hours

2. Constant-current charging at 7A for 10-12 hours

3. Constant-current charging at 3.5A for 3 hours

Constant-voltage Charging With a constant charging voltage of 14.8-15.5V, the maximum current must be no more than 17.5A; when the charging current drops to no more than 0.5A, charge the battery for another 3 hours, keeping the total charging time within 24 hours.

Downloaded from www.Manualslib.com manuals search engine

Tires

Tire type and cold inflation pressure:

Tire type	Position	6 seats vehicle (KPa)	6+ seats vehicle (KPa)
215/55R17 94V	Front wheels	250	250
	Rear wheels	250	250

Downloaded from www.Manualslib.com manuals search engine

Left Instrument Panel Fuses

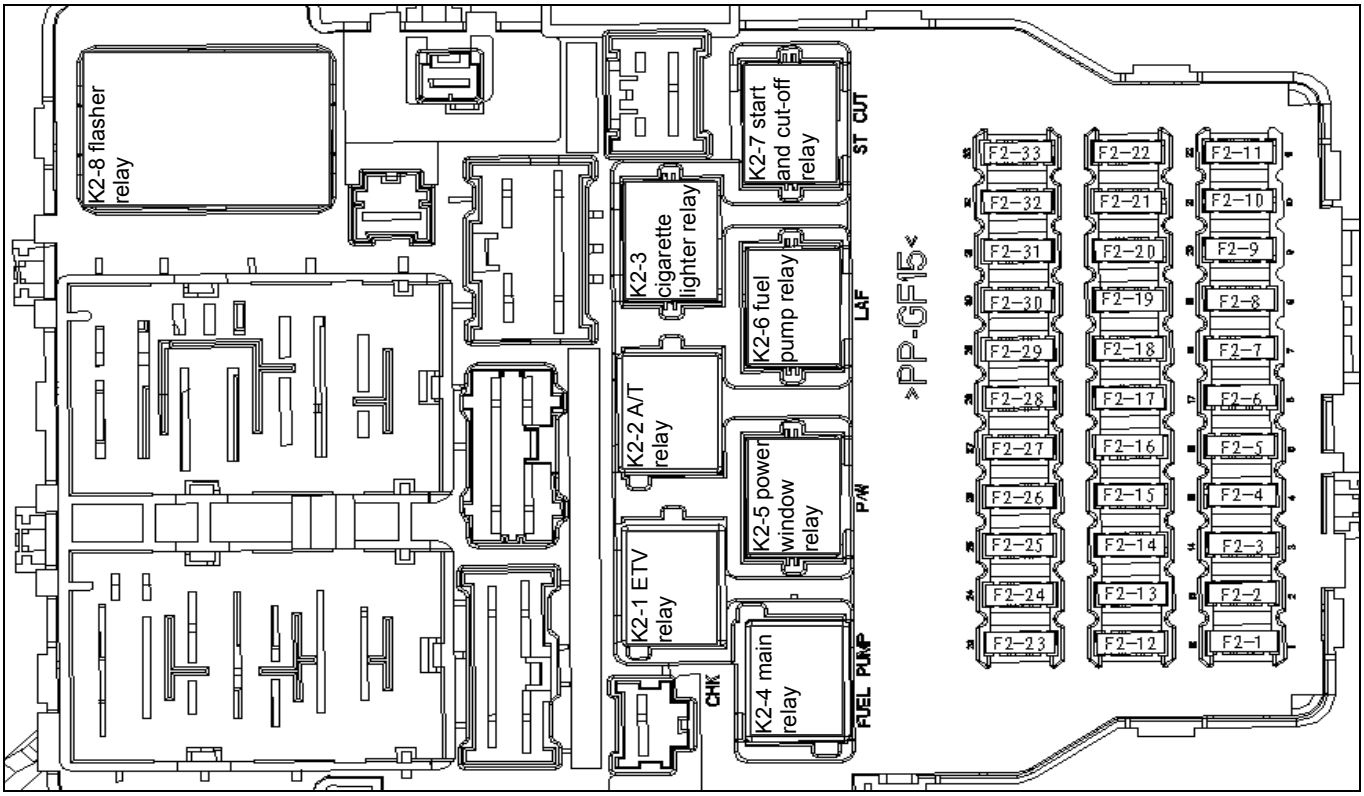

Downloaded from www.Manualslib.com manuals search engine

M6 Instrument Panel Distribution Box Relay			
Position	Definition	Position	Definition
K2-1	EVT relay	K2-5	Power window relay
K2-2	A/T relay	K2-6	Oil pump relay
K2-3	Cigarette lighter relay	K2-7	Starting and cut-off relay
K2-4	Main relay	K2-8	Flasher relay

M6 Instrument Panel Distribution Box Assembly (figure above)					
Position	Definition	Position	Definition	Position	Definition
F2-1	Door Lock Mechanism (20A)	F2-12	Reserved (7.5A)	F2-23	Main relay (30A)
F2-2	Door lights, interior lights (7.5A)	F2-13	Steering shaft lock (7.5A)	F2-24	Oil pump motor (15A)
F2-3	Control module constant power (10A)	F2-14	IG2 power supply (10A)	F2-25	ETV motor (15A)
F2-4	Sound system constant power (15A)	F2-15	Reserved (20A)	F2-26	EMS (15A)
F2-5	Cigarette lighter, onboard power supply (15A)	F2-16	Front left window motor (20A)	F2-27	Reserved
F2-6	Rear fog lights (7.5A)	F2-17	Rear right window motor (20A)	F2-28	ABS+ECU-IG1 (15A)
F2-7	Seat heater (20A)	F2-18	Front right window motor (20A)	F2-29	Reserved
F2-8	Front left power seat (20A)	F2-19	Rear left window motor (20A)	F2-30	Rear wiper power supply (15A)
F2-9	Rear blower (30A)	F2-20	Auxiliary power supply (7.5A)	F2-31	Switching two-position power supply (7.5A)
F2-10	Reserved (20A)	F2-21	Reserved (10A)	F2-32	SRS (10A)
F2-11	Reserved (20A)	F2-22	Reserved (15A)	F2-33	Front wiper power supply (30A)

Downloaded from www.Manualslib.com manuals search engine

Engine Compartment Distribution Box

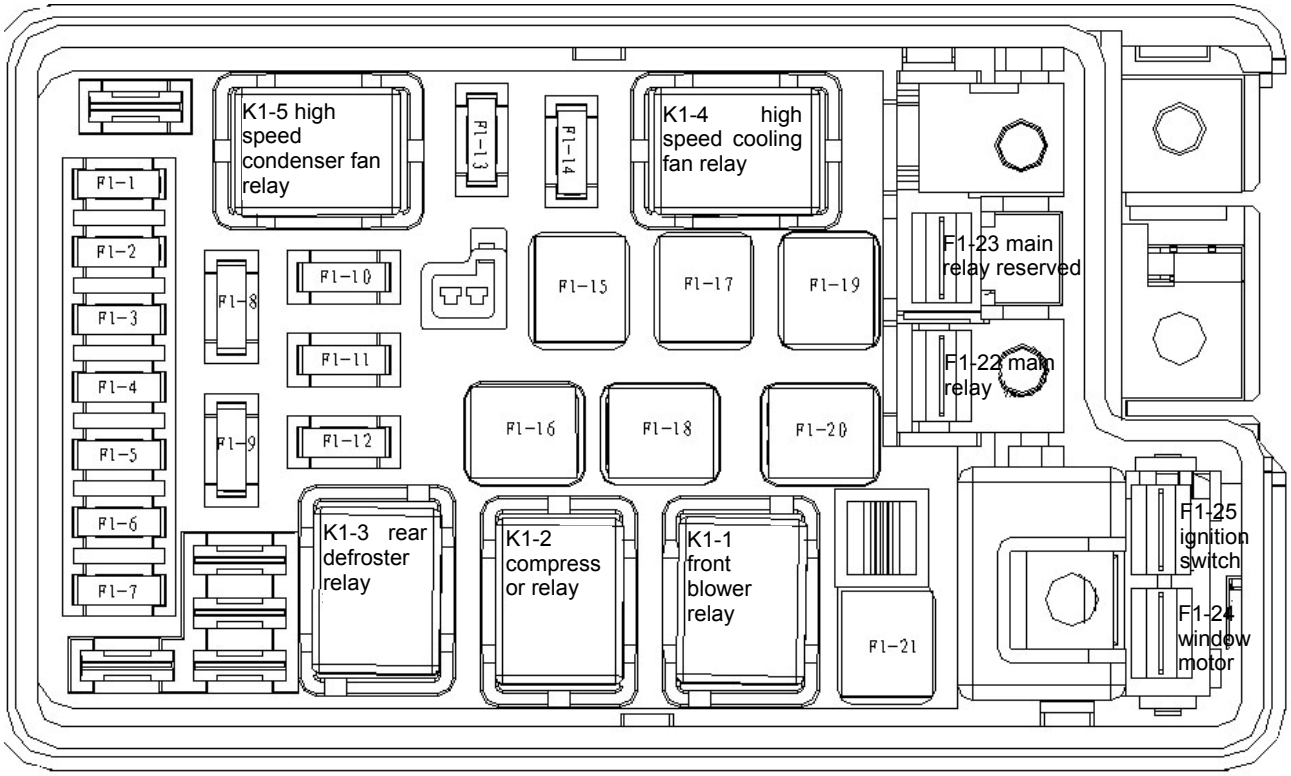

Downloaded from www.Manualslib.com manuals search engine

Definition of M6 Engine Compartment Relays			
Position	Definition	Position	Definition
K1-1	Front blower relay	K1-4	High speed cooling fan
K1-2	Compressor relay	K1-5	High speed condenser fan
K1-3	Rear defroster relay		

M6 Engine Compartment Distribution Box Assembly (figure above)					
Position	Definition	Position	Definition	Position	Definition
F1-1	Right high beam (10A)	F1-10	Low (high) speed fan (30A)	F1-19	ABS pump motor (40A)
F1-2	Left high beam (10A)	F1-11	High speed fan (20A)	F1-20	Power seat (40A)
F1-3	Left low beam (10A)	F1-12	Compressor (7.5A)	F1-21	Front blower (40A)
F1-4	Right low beam (10A)	F1-13	Turn signal lights (15A)	F1-22	Main fuse (125A)
F1-5	2# ignition switch (25A)	F1-14	Horn, braking lights (40A)	F1-23	Main fuse reserve
F1-6	Width-indicator light (15A)	F1-15	Rear defroster (40A)	F1-24	Window motor (50A)
F1-7	MCU (7.5A)	F1-16	Door lock, MICU constant power (40A)	F1-25	1# ignition switch (50A)
F1-8	Front fog lights (25A)	F1-17	ABS ECU (25A)		
F1-9	EMS (15A)	F1-18	EMS (40A)		

Downloaded from www.Manualslib.com manuals search engine

Version 201003

Build Your Dreams

BYD AUTO Co., Ltd.
Address: No. 2, Yadi Road, New Industrial Park, High-tech District, Xi'an, Shanxi, P.R.C. (710119)
F3/F3R producing address:
No. 2, Yadi Road, New Industrial Park, High-tech District, Xi'an, Shanxi, P.R.C. (710119)
F6, F0, M6 producing address:
No. 3001, Hengping Highway, Pingshan, Longgang District, Shenzhen, Guangdong, P.R.C. (518118)
Service hotline: 400-8303666, 0755-84218038
Website: www.bydauto.com.cn E-mail: bydauto@byd.com

Downloaded from www.Manualslib.com manuals search engine