2014-present MAZDA6 Bodyshop Manual

FOREWORD

This bodyshop manual is intended for use by technicians of Authorized Mazda Dealers to help them service and repair Mazda vehicles. It can also be useful to owners and operators of Mazda vehicles in performing limited repair and maintenance on Mazda vehicles.

For proper repair and maintenance, a thorough familiarization with this manual is important, and it should always be kept in a handy place for quick and easy reference.

All the contents of this manual, including drawings and specifications, are the latest available at the time of printing.
As modifications affecting repair or maintenance occur, relevant information supplementary to this volume will be made available at Mazda dealers. This manual should be kept up-to-date.

Mazda Motor Corporation reserves the right to alter the specifications and contents of this manual without obligation or advance notice.

All rights reserved. No part of this book may be reproduced or used in any form or by any means, electronic or mechanical including photocopying and recording and the use of any kind of information storage and retrieval system-without permission in writing.

Mazda Motor Corporation
HIROSHIMA, JAPAN

CONTENTS

Title		Section
GENERAL INFORMATION		00
BODY STRUCTURE	CONSTRUCTION	80A
	PANEL REPLACEMENT	80B
	WATER-PROOF AND RUST PREVENTIVE	80C
	DIMENSIONS	80D
	PLASTIC BODY PARTS	80E
	CONSTRUCTION STANDARD VALVES	80F

APPLICATION:
This manual is applicable to vehicles beginning with the Vehicle Identification Numbers (VIN), shown on the following page.

© **2012 Mazda Motor Corporation**
PRINTED IN U.S.A., DECEMBER 2012
Form No. 3525–1U–12L
Part No. 9999–95–099F–14

cardiagn.com

VEHICLE IDENTIFICATION NUMBERS (VIN)

JM1	GJ1S3*E#	100001—
JM1	GJ1S5*E#	100001—
JM1	GJ1T3*E#	100001—
JM1	GJ1T5*E#	100001—
JM1	GJ1U3*E#	100001—
JM1	GJ1U5*E#	100001—
JM1	GJ1V3*E#	100001—
JM1	GJ1V5*E#	100001—
JM1	GJ1W3*E#	100001—
JM1	GJ1W5*E#	100001—
JM1	GJ1X3*E#	100001—
JM1	GJ1X5*E#	100001—

cardiagn.com

GENERAL INFORMATION

00
SECTION

GENERAL INFORMATION 00-00

00-00 GENERAL INFORMATION

VEHICLE IDENTIFICATION NUMBER (VIN) CODE 00-00–2
VEHICLE IDENTIFICATION NUMBERS (VIN) 00-00–2
2014 Model Year 00-00–2
HOW TO USE THIS MANUAL 00-00–3
Efficient Replacement of Body Panels 00-00–3
Symbols of Panel Replacement 00-00–3
Body Dimensions (Flat-plane Dimensions) 00-00–4
Body Dimensions (Straight-line Dimensions) 00-00–6
Symbols of Body Dimensions 00-00–7
AIR BAG SYSTEM SERVICE WARNINGS 00-00–8
Air Bag Module Inspection 00-00–8
Air Bag Module Handling 00-00–8
Side Air Bag Module Handling 00-00–8
SAS Control Module Handling 00-00–9
Crash Zone Sensor Handling 00-00–9
Side Air Bag Sensor Handling. 00-00–9
Pre-tensioner Seat Belt Inspection 00-00–10
SERVICE PRECAUTIONS 00-00–10
Arrangement of Workshop 00-00–10
Safety Precautions 00-00–10
Vehicle Protection 00-00–10
Remove Dangerous Articles 00-00–10
Use of Pulling Equipment 00-00–11
Prevent Short Circuits 00-00–11
EFFICIENT REMOVAL OF BODY PANELS. 00-00–12
Body Measurements 00-00–12
Prevention of Body Deformation. 00-00–12
Selection of Cut-and-join Locations . . . 00-00–12
Removal of Associated Parts 00-00–12
Rough Cutting of Damaged Panel 00-00–13
EFFICIENT INSTALLATION OF BODY PANELS 00-00–13
Checking Preweld Measurements And Watching 00-00–13
Welding Notes 00-00–13
Spot Welding Notes 00-00–14
Checking Weld Strength. 00-00–15
INSTALLATION PREPARATIONS. 00-00–16
Rough Cutting of New Parts. 00-00–16
Determination of Welding Method 00-00–16
Making Holes for Arc Welding 00-00–16
Application of Weld-through Primer . . . 00-00–17
ANTICORROSION, SOUND INSULATION, AND VIBRATION INSULATION 00-00–17
Body Sealing 00-00–17
Application of Undercoating 00-00–17
Application of Rust Inhibitor 00-00–18
Application of Dumping Sheet 00-00–18
ABBREVIATION 00-00–18
IDENTIFICATION NUMBER LOCATIONS 00-00–19
Vehicle Identification Number (VIN) . . . 00-00–19
Engine Type/Number 00-00–19
BODY COLORS. 00-00–19
Color Code and Color Name 00-00–19
Verification of Primary Color Mixture for Body Color 00-00–19

cardiagn.com

VEHICLE IDENTIFICATION NUMBER (VIN) CODE

id000000600800

2014 Model Year

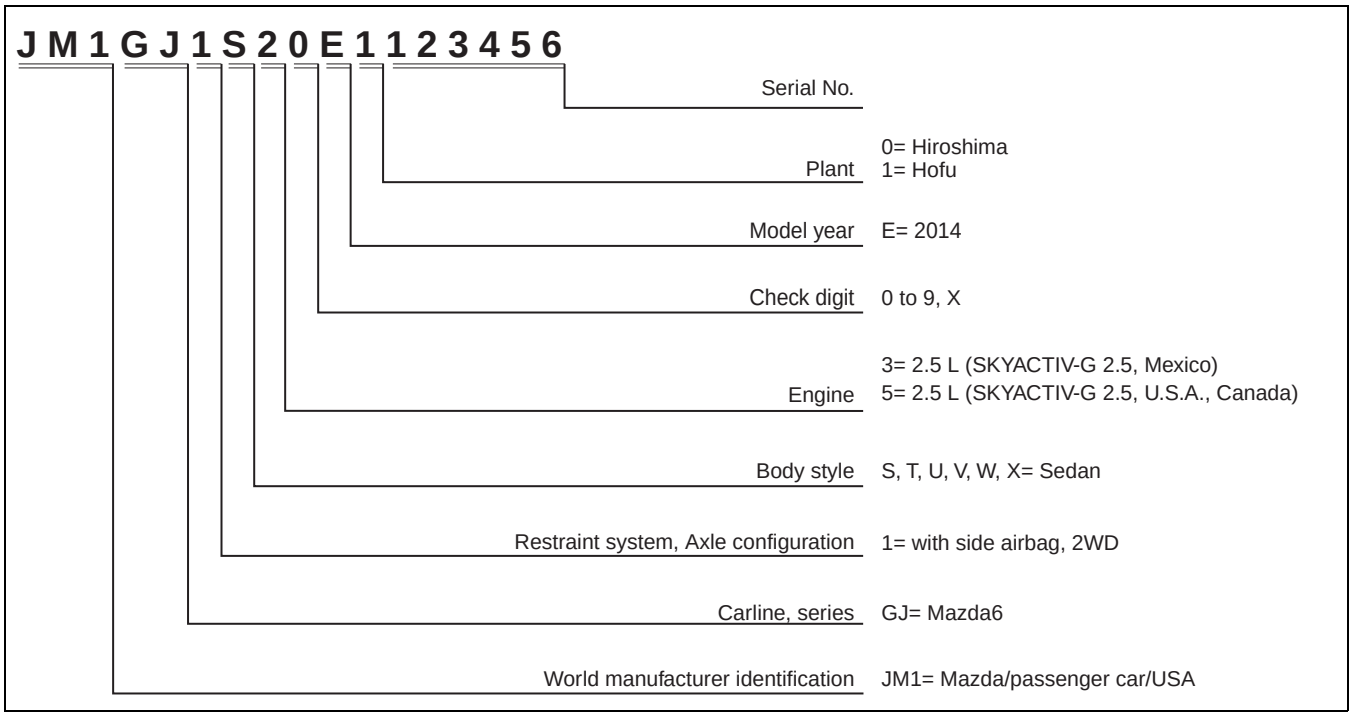

am6xuw0000649

VEHICLE IDENTIFICATION NUMBERS (VIN)

id000000600100

2014 Model Year

JM1 GJ1S3*E# 100001—
JM1 GJ1S5*E# 100001—
JM1 GJ1T3*E# 100001—
JM1 GJ1T5*E# 100001—
JM1 GJ1U3*E# 100001—
JM1 GJ1U5*E# 100001—
JM1 GJ1V3*E# 100001—
JM1 GJ1V5*E# 100001—
JM1 GJ1W3*E# 100001—
JM1 GJ1W5*E# 100001—
JM1 GJ1X3*E# 100001—
JM1 GJ1X5*E# 100001—

cardiagn.com

HOW TO USE THIS MANUAL

id000000600900

Efficient Replacement of Body Panels

- This section contains information on the body panels in regard to the welding types, number of spot welds, and cut-and-join locations that are necessary for panel removal and installation.
- The type of weld and position are indicated by symbols.
- Some sections have notes concerning the operation being performed. Thoroughly read and understand the notes before carrying out any procedures.

Example

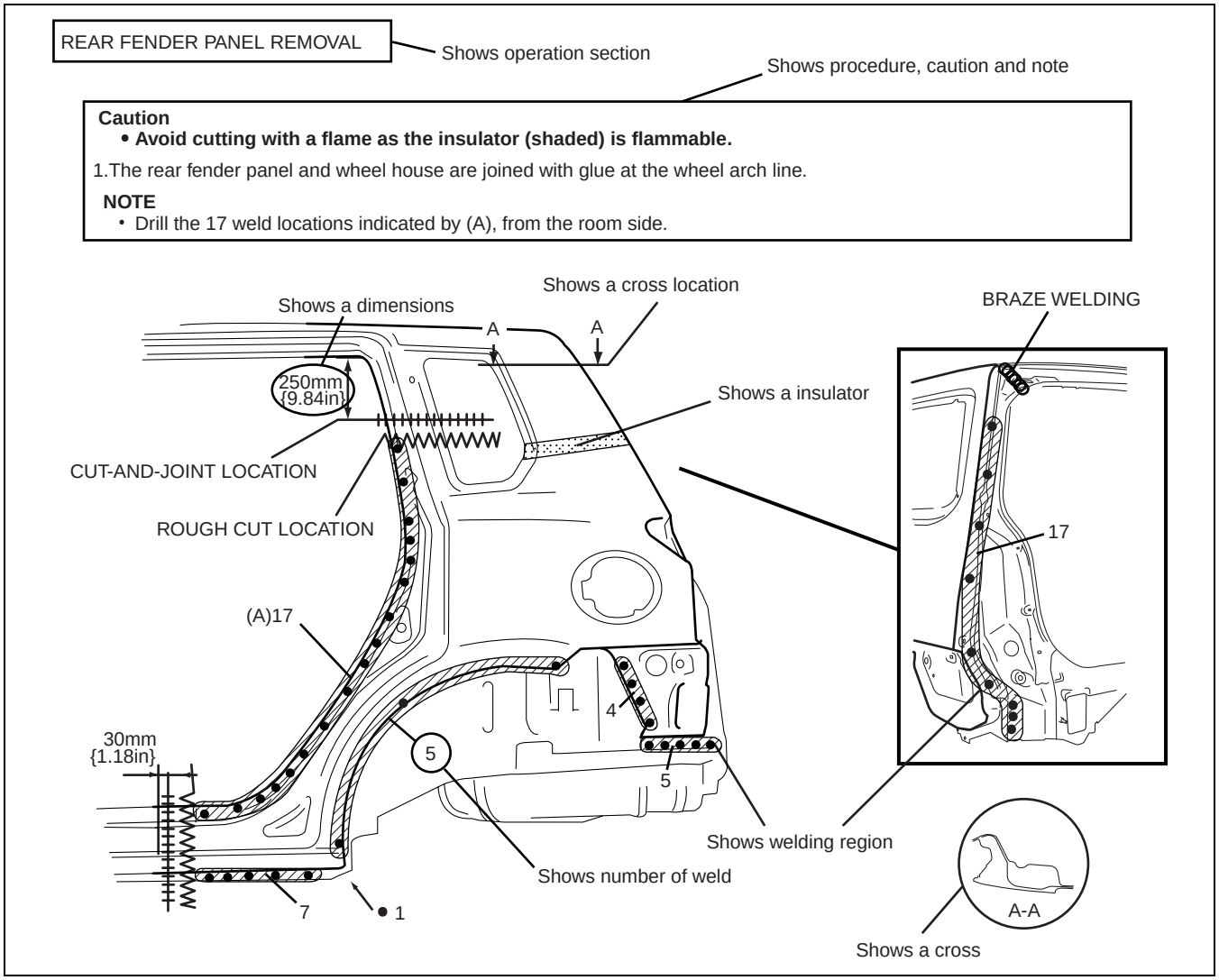

acxuub00000031

Symbols of Panel Replacement

- The following 6 symbols are used to indicate the type of weld that is used when replacing body panels.

SYMBOL	MEANING	SYMBOL	MEANING
●	Spot welding	|||||||||||	Continuous arc welding (Cut-and-join location)
■	Arc welding (plug welding)	⊂⊃⊂⊃⊂⊃	Brazing welding (oxyacetylene welding)
+	Arc welding (spot welding)	∧∧∧	Rough cut location

ac5wzb00000204

cardiagn.com

Body Dimensions (Flat-plane Dimensions)

- Flat-plane dimensions are the dimensions measured by projecting certain reference points onto a plane surface.

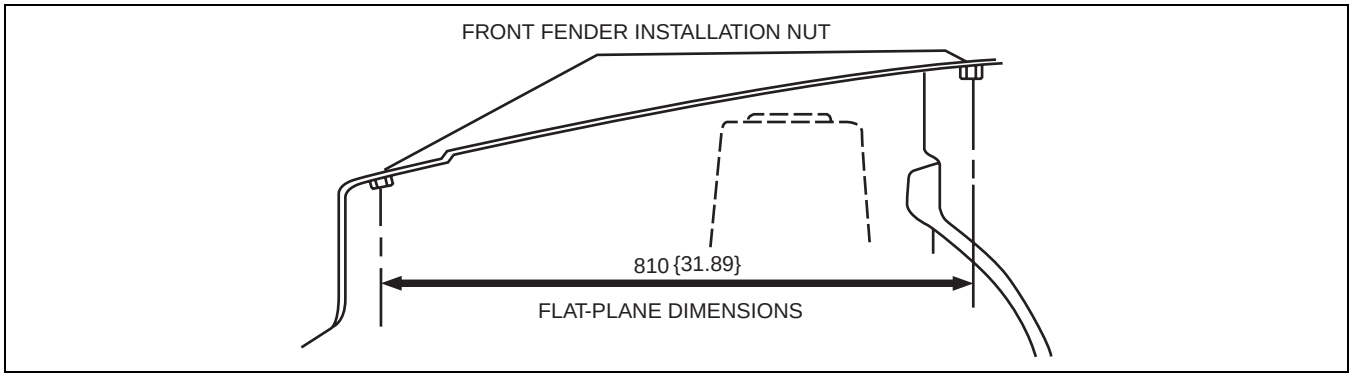

acxuub00000033

- When there are no specific indications, the standard points and dimensions are symmetrical in regard to the center of the vehicle.
- The hypothetical lines may differ according to the vehicle model.
- The schematic diagram shows the vehicle as it is projected from the underbody.

cardiagn.com

Example

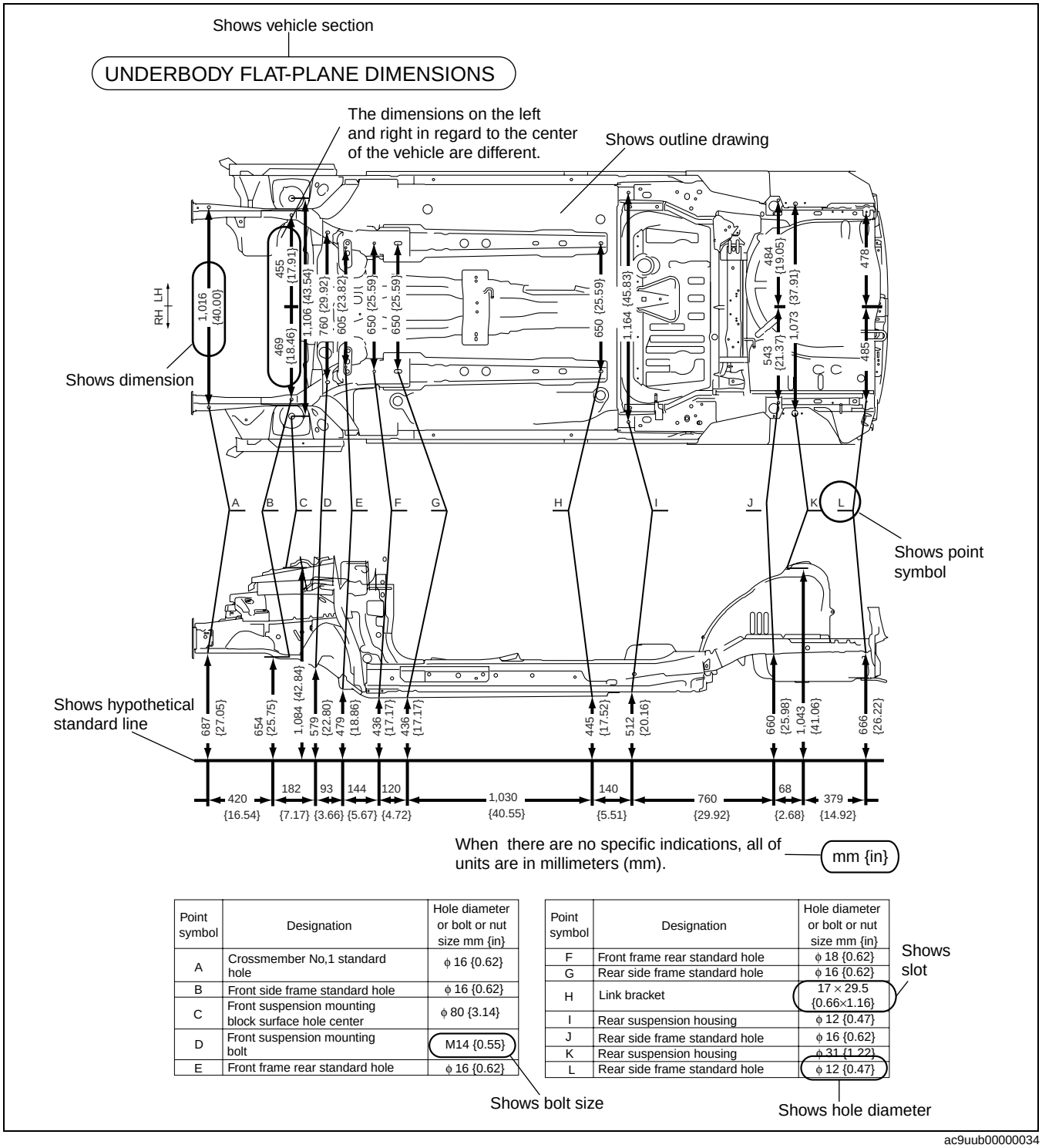

Point symbol	Designation	Hole diameter or bolt or nut size mm {in}
A	Crossmember No,1 standard hole	ϕ 16 {0.62}
B	Front side frame standard hole	ϕ 16 {0.62}
C	Front suspension mounting block surface hole center	ϕ 80 {3.14}
D	Front suspension mounting bolt	M14 {0.55}
E	Front frame rear standard hole	ϕ 16 {0.62}

Point symbol	Designation	Hole diameter or bolt or nut size mm {in}
F	Front frame rear standard hole	ϕ 18 {0.62}
G	Rear side frame standard hole	ϕ 16 {0.62}
H	Link bracket	17 × 29.5 {0.66×1.16}
I	Rear suspension housing	ϕ 12 {0.47}
J	Rear side frame standard hole	ϕ 16 {0.62}
K	Rear suspension housing	ϕ 31 {1.22}
L	Rear side frame standard hole	ϕ 12 {0.47}

ac9uub00000034

cardiagn.com

Body Dimensions (Straight-line Dimensions)

- Straight-line dimensions are the actual dimensions between two standard points.

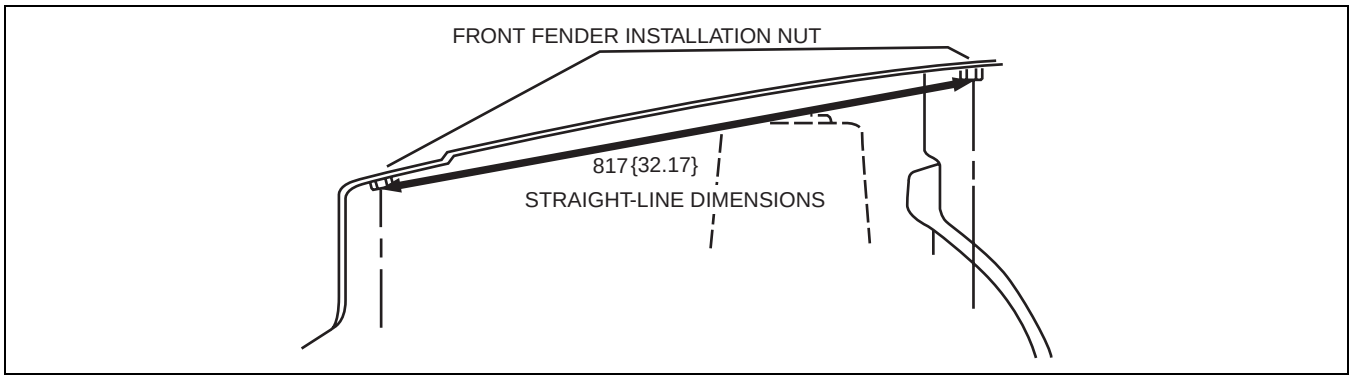

acxuub00000035

- When there are no specific indications, the standard points and dimensions are symmetrical in regard to the center of the vehicle.

cardiagn.com

Example

ROOM STRAIGHT-LINE DIMENSIONS (1)

Shows vehicle section

Shows point symbol

Shows outline drawing

Shows dimension

Shows dimension location

No indication are shown within the outline drawing.

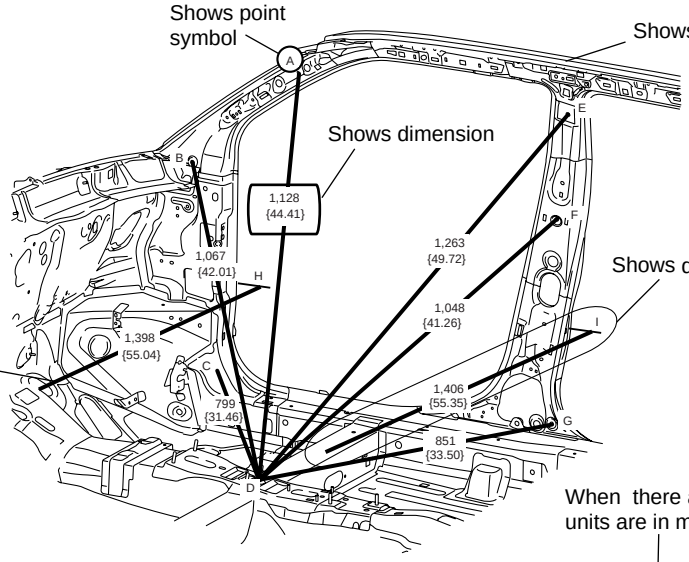

When there are no specific indications, all of units are in millimeters (mm).

mm {in}

Shows point indication
Without apostrophe:RH
With apostrophe:LH

Shows details of the standard point location

Shows position and shape of the points

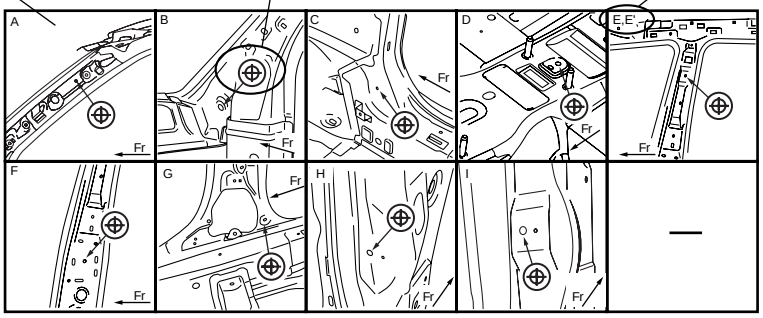

Point symbol	Designation	Hole diameter or bolt or nut size mm {in}
A	Front pillar inner designation	ϕ 16 {0.62}
B	Front pillar inner designation	ϕ 17 {0.67}
C	Harness installation hole	ϕ 31 {1.22}
D	Front floor pan designation	M14 {0.55}
E	Adjuster installation hole	ϕ 16 {0.62}

Shows bolt size

Point symbol	Designation	Hole diameter or bolt or nut size mm {in}
F	Trim installation hole	ϕ 18 {0.71}
G	Harness installation hole	ϕ 16 {0.62}
H	Chaker bracket installation hole	17 × 29.5 {0.66×1.16}
I	Chaker bracket installation hole	ϕ 12 {0.47}

Shows hole diameter

Shows slot

am3uub0000007

Symbols of Body Dimensions

- The following 8 symbols are used to indicate the standard points.

SYMBOL	MEANING
⊕	Center of circular hole
⊕	Center elliptical hole
	Notch
	Panel seam, bead, etc.

SYMBOL	MEANING
← (arrow only)	Bolt tip
⊞	Center of rectangular-shaped hole
◪	Edge of rectangular-shaped hole

acxuub00000037

cardiagn.com

AIR BAG SYSTEM SERVICE WARNINGS

id000000920000

Air Bag Module Inspection

- **Inspecting an air bag module using a tester can operate (deploy) the air bag module, which may cause serious injury. Do not use a tester to inspect an air bag module. Always use the on-board diagnostic function to diagnose the air bag module for malfunctions.**

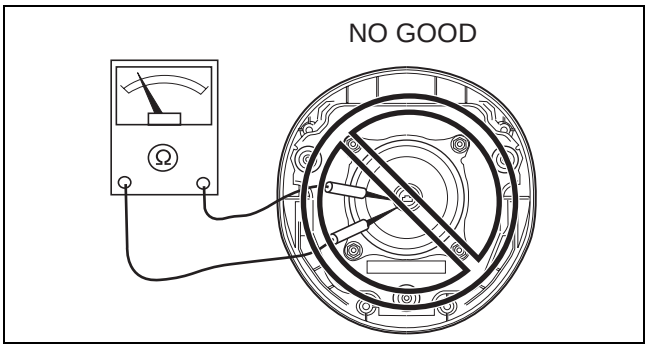

am6xuw0000606

Air Bag Module Handling

- **Before removing the air bag module or disconnecting the air bag module connector, always switch the ignition off, disconnect the negative battery cable, and then wait for 1 min or more to allow the backup power supply of the SAS control module to deplete its stored power.**
- **Handling a live (undeployed) air bag module that is pointed toward your body could result in serious injury if the air bag module were to accidentally operate (deploy). When carrying a live (undeployed) air bag module, point the deployment surface away from your body to lessen the chance of injury in case it operates (deploys).**

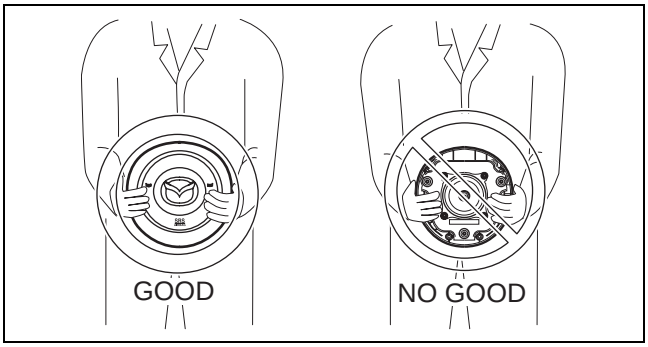

am6xuw0000606

- **A live (undeployed) air bag module placed with its deployment surface to the ground is dangerous. If the air bag module were to accidentally operate (deploy), it could cause serious injury. Always place a live (undeployed) air bag module with its deployment surface up.**

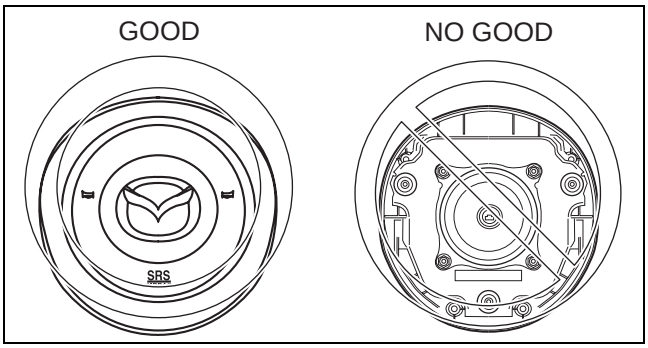

am6xuw0000606

Side Air Bag Module Handling

- **Before removing the side air bag module or disconnecting the side air bag module connector, always switch the ignition off, disconnect the negative battery cable, and then wait for 1 min or more to allow the backup power supply of the SAS control module to deplete its stored power.**
- **When a side air bag module operates (deploys) due to a collision, the interior of the seat back (pad, frame, trim) may become damaged. If a side air bag does not operate (deploy) normally from a seat back that has been reused, a serious accident may result. After a side air bag has operated (deployed), always replace both the side air bag module and the seat back (pad, frame, trim) with new parts. After servicing, verify that the seat operates normally and that the wiring harness is not caught.**

cardiagn.com

SAS Control Module Handling

- **When connecting or disconnecting the SAS control module connector, a person charged with static electricity could accidentally operate (deploy) each air bag module. Before connecting or disconnecting the SAS control module connector, discharge any charged static electricity from your body.**
- **Removing the SAS control module or disconnecting the SAS control module connector with the ignition ON can activate the sensor in the SAS control module and operate (deploy) the air bags and pre-tensioner seat belts, which may cause serious injury. Before removing the SAS control module or disconnecting the SAS control module connector, always switch the ignition off, disconnect the negative battery cable, and then wait for 1 min or more to allow the backup power supply of the SAS control module to deplete its stored power.**
- **Connecting the SAS control module connector with the SAS control module not securely fixed to the vehicle is dangerous. The sensor in the SAS control module could send an electrical signal to the air bag modules and pre-tensioner seat belts. This will operate (deploy) the air bags and pre-tensioner seat belts, which may result in serious injury. Therefore, before connecting the connector, securely fix the SAS control module to the vehicle.**
- **Because a sensor is built into the SAS control module, once the air bags and pre-tensioner seat belts have operated (deployed) due to a collision or other causes, the SAS control module must be replaced with a new one even if the used one does not have any visible external damage or deformation. The used SAS control module may have been damaged internally, which may cause improper operation. If the SAS control module is reused, the air bags and pre-tensioner seat belts may not operate (deploy) normally, which could result in a serious accident. Always replace the SAS control module with a new one. The SAS control module cannot be bench-checked or self-checked.**

Crash Zone Sensor Handling

- **Removing the crash zone sensor or disconnecting the crash zone sensor connector with the ignition ON can activate the crash zone sensor and operate (deploy) the air bags and pre-tensioner seat belts, which may cause serious injury. Before removing the crash zone sensor or disconnecting the crash zone sensor connector, always switch the ignition off, disconnect the negative battery cable, and then wait for 1 min or more to allow the backup power supply of the SAS control module to deplete its stored power.**
- **If the crash zone sensor is subjected to shock or the sensor is disassembled, the air bags and pre-tensioner seat belts may accidentally operate (deploy) and cause injury, or the system may fail to operate normally and cause a serious accident. Do not subject the crash zone sensor to shock or disassemble the sensor.**
- **Because a sensor is built into the crash zone sensor, once the air bags and pre-tensioner seat belts have operated (deployed) due to a collision or other causes, the crash zone sensor must be replaced with a new one even if the used one does not have any visible external damage or deformation. If the crash zone sensor is reused, the air bags and pre-tensioner seat belts may not operate (deploy) normally, which could result in a serious accident. Always replace the crash zone sensor with a new one. The crash zone sensor cannot be bench-checked or self-checked.**

Side Air Bag Sensor Handling

- **Removing the side air bag sensor or disconnecting the side air bag sensor connector with the ignition ON can activate the side air bag sensor and operate (deploy) the side air bag, which may cause serious injury. Before removing the side air bag sensor or disconnecting the side air bag sensor connector, always switch the ignition off, disconnect the negative battery cable, and then wait for 1 min or more to allow the backup power supply of the SAS control module to deplete its stored power.**
- **If the side air bag sensor is subjected to shock or the sensor is disassembled, the side air bag may accidentally operate (deploy) and cause injury, or the system may fail to operate normally and cause a serious accident. Do not subject the side air bag sensor to shock or disassemble the sensor.**
- **Because a sensor is built into the side air bag sensor, once the air bag has operated (deployed) due to a collision or other causes, the side air bag sensor must be replaced with a new one even if the used one does not have any visible external damage or deformation. If the side air bag sensor is reused, the side air bag may not operate (deploy) normally, which could result in a serious accident. Always replace the side air bag sensor with a new one. The side air bag sensor cannot be bench-checked or self-checked.**

cardiagn.com

Pre-tensioner Seat Belt Inspection

- **Inspecting a pre-tensioner seat belt using a tester can operate (deploy) the pre-tensioner seat belt, which may cause serious injury. Do not use a tester to inspect a pre-tensioner seat belt. Always use the on-board diagnostic function to diagnose the pre-tensioner seat belt for malfunctions.**

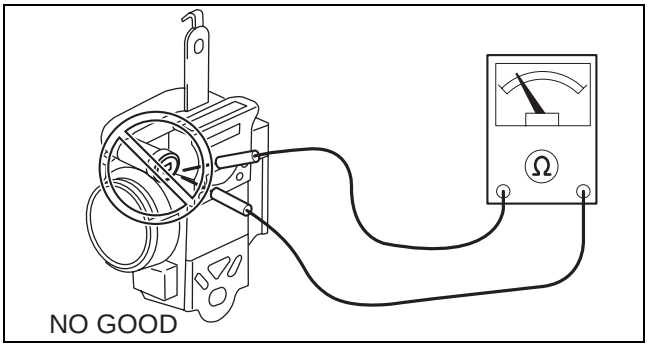

ac5uuw00001455

SERVICE PRECAUTIONS

id000000600200

Arrangement of Workshop

- Arrangement of the workshop is important for safe and efficient work.

Safety Precautions

- Protective head covering and safety shoes should always be worn. Depending upon the nature of the work, gloves, safety glasses, ear protectors, face shield, etc., should also be used.

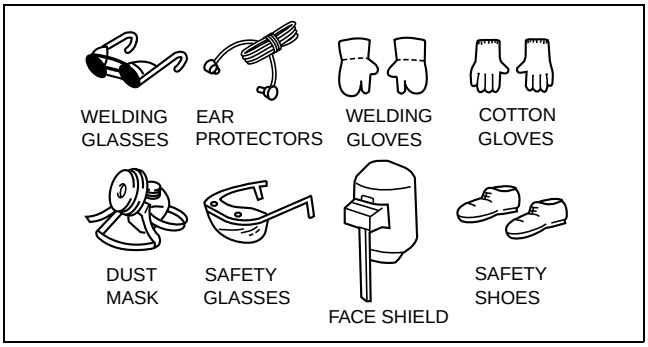

am3uub0000007

Vehicle Protection

- Use seat covers and floor covers.
- Use heat-resistant protective covers to protect glass areas and seats from heat or sparks during welding.
- Protect items such as moldings, garnishes, and ornaments with tape when welding.

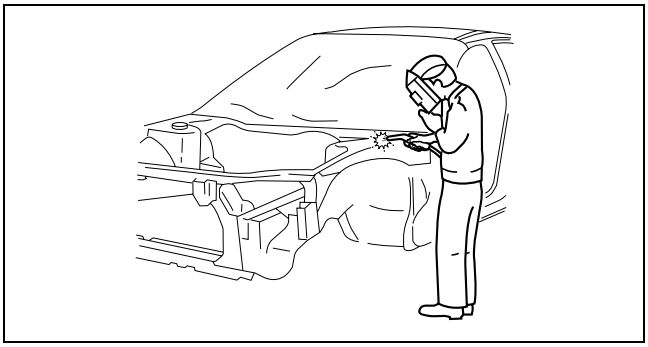

acxuub00000063

Remove Dangerous Articles

- Remove the fuel tank before using an open flame in that area. Plug connection piping to prevent fuel leakage.

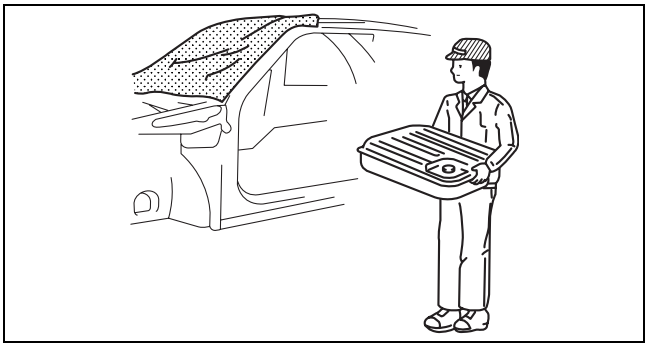

acxuub00000064

cardiagn.com

Use of Pulling Equipment

- When using pulling equipment, keep away from the pulling area and use safety wires to prevent accidents.

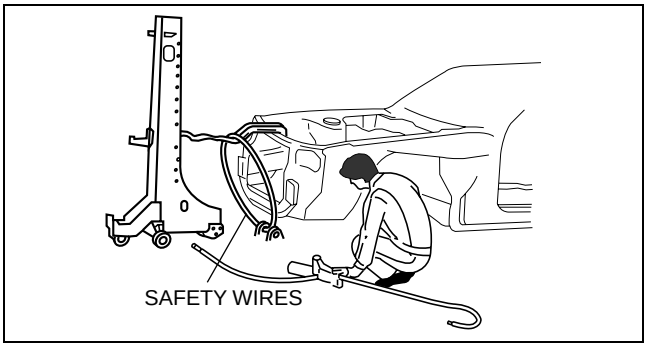

am3uub0000007

Prevent Short Circuits

- Switch the ignition to off.
- Disconnect the battery cables.

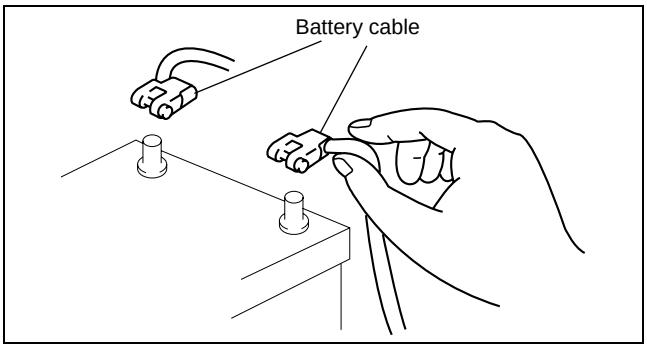

acxuub00000042

- Securely connect the welding machine ground near the welding area.

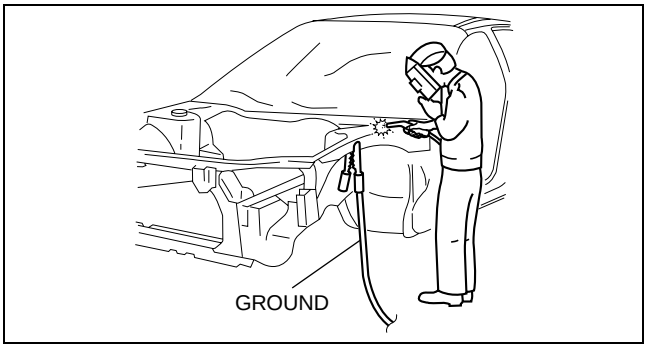

am3uub0000007

cardiagn.com

EFFICIENT REMOVAL OF BODY PANELS

id000000600300

Body Measurements

- Before removal or rough-cutting, first measure the body at and around the damaged area against the standard reference dimension specifications. If there is deformation, use frame repair equipment to make a rough correction.

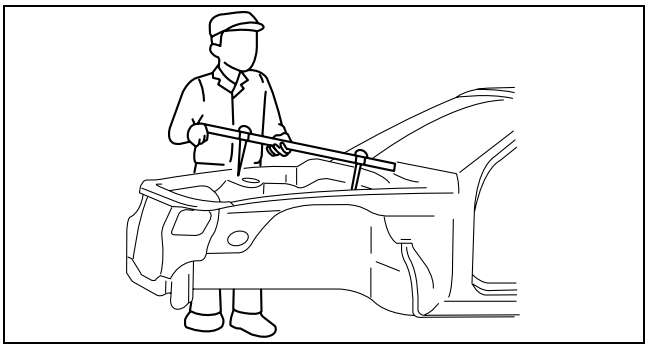

acxuub00000065

Prevention of Body Deformation

- Use a clamp or a jack for removal and reinforce at and around the rough-cutting location to prevent deforming of the body.

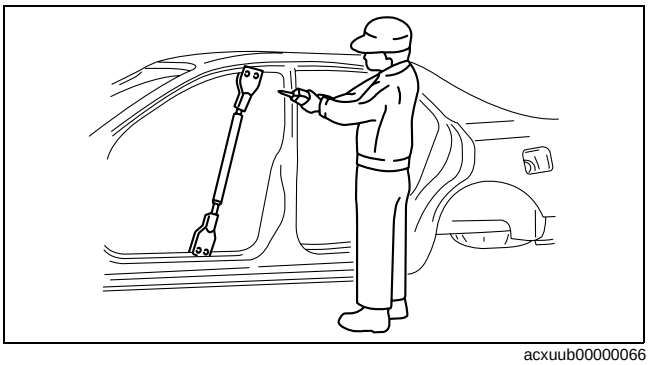

acxuub00000066

Selection of Cut-and-join Locations

- For parts where complete replacement is not feasible, careful cutting and joining operations should be followed. If the location to be cut is a flat area where there is no reinforcement, the selected cutting location should be where the welding distortion will be minimal.

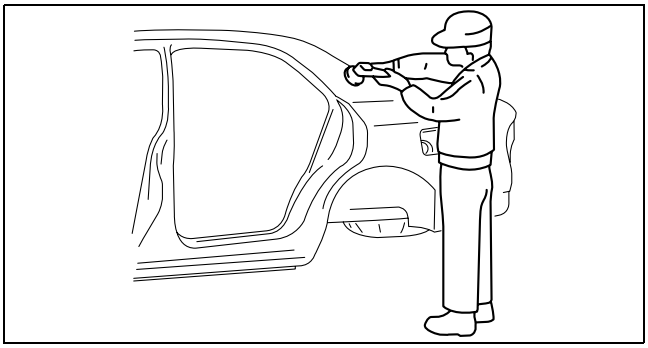

acxuub00000067

Removal of Associated Parts

- Protect moldings, garnishes, and ornaments with tape when removing associated parts.

cardiagn.com

Rough Cutting of Damaged Panel

- Verify that there are no parts (such as pipes, hoses, and wiring harness) nearby or on the opposite side of a panel which could be damaged by heat.
- For cut-and-join areas, allow for an overlap of 30—50 mm {1.2—1.9 in} and then rough-cut the damaged panel.

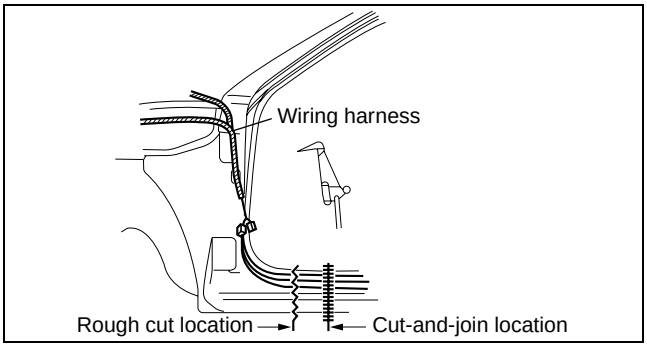

acxuub00000047

EFFICIENT INSTALLATION OF BODY PANELS

id000000600500

Checking Preweld Measurements And Watching

- Align to the standard reference dimensions, based upon the body dimensions illustration, so that new parts are installed in the correct position.

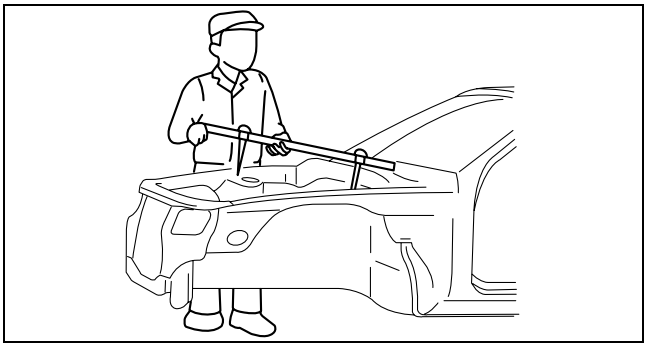

acxuub00000069

Welding Notes

- For the number of weld points, welding should be performed in accordance with the following reference standards.

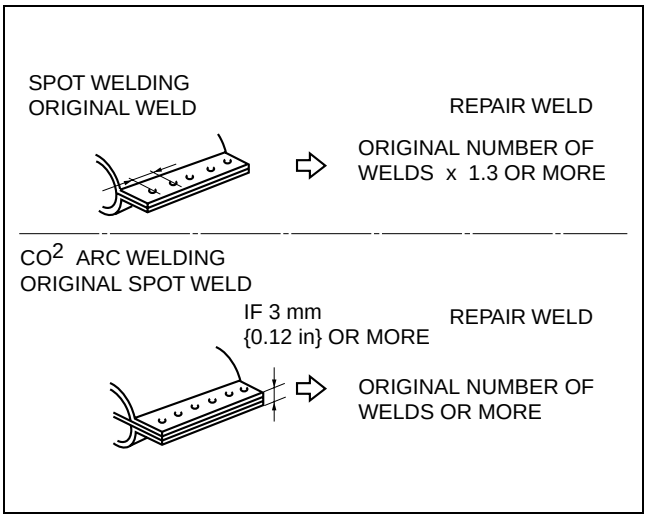

am3uub0000007

cardiagn.com

Spot Welding Notes

- The shape of the spot welder tip is D=(2×t)+3. If the upper panel thickness is different from that of the under panel, adjust to the thinner one.

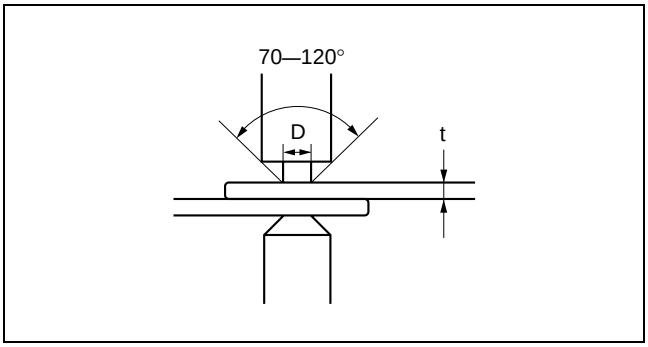

ac9uub00000041

- Because the weld strength is affected by the shape of the spot welder tip, the optimum condition of the tip should always be maintained.
- Spot welds should be made at points other than the originally welded points.

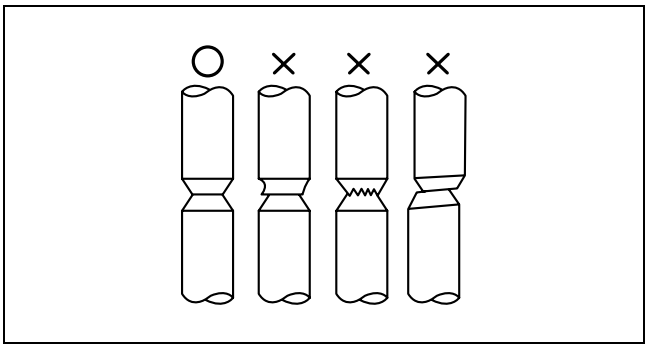

acxuub00000070

- Before spot welding, make a trial weld using the same material as the body panel to check the weld strength.

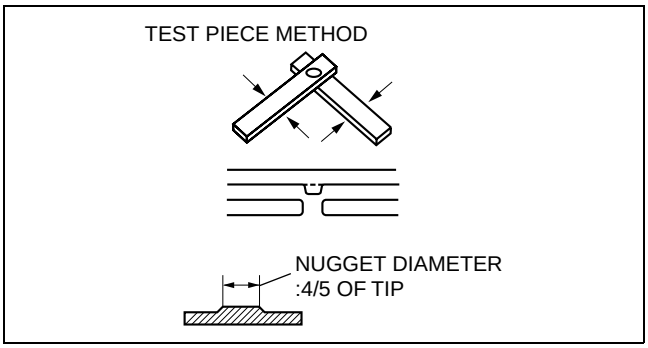

am3uub0000007

cardiagn.com

Checking Weld Strength

- Installation locations of the engine, chassis, and seat belts are designated as important safety locations for weld strength. Check weld strength by driving a chisel between the panels at every fourth or fifth weld spot, and every tenth regular weld location.

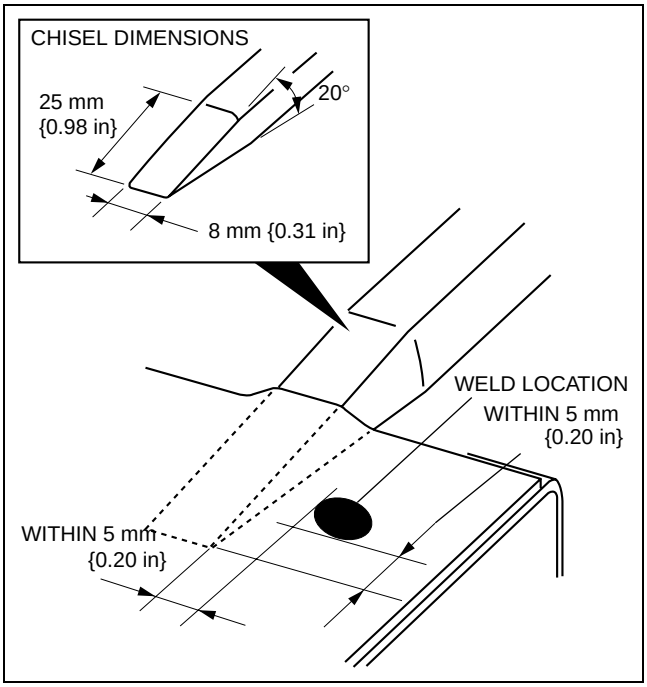

am3uub0000007

- Drive the chisel between the panels according to the number of panels as shown below.
- To determine weld strength, drive the chisel between the panel and check whether the panels come apart. If the panels come apart, make another weld near the original weld.
- Restore the shape of the checked area.

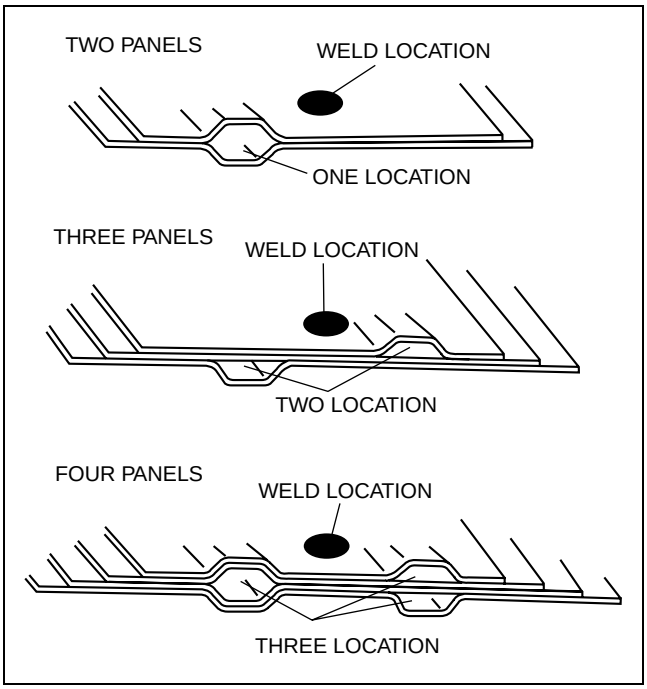

am3uub0000008

cardiagn.com

INSTALLATION PREPARATIONS

id000000600400

Rough Cutting of New Parts

- For cut-and-join areas, allow for an overlap of 30—50 mm {1.2—1.9 in} with the remaining area on the body side and then rough-cut the new parts.

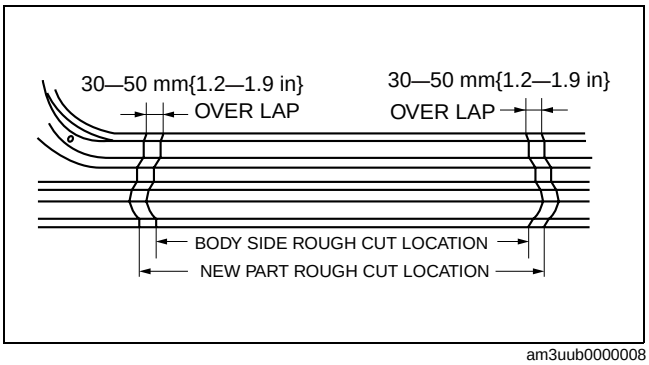

am3uub0000008

Determination of Welding Method

- If the total thickness at the area to be welded is 3 mm {0.12 in} or more, use a gas shielded-arc welder to make the plug welds.

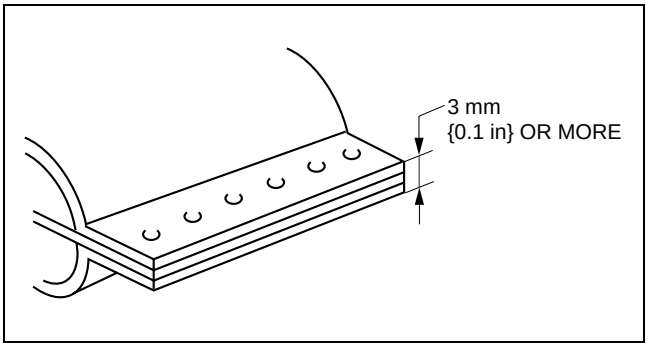

am3uub0000008

Making Holes for Arc Welding

- For places that cannot be spot welded, make a hole for arc welding using a punch or drill as follows.

(mm {in})

Panel thickness (ϕ)	Hole diameter (ϕ)
0.60—0.90 {0.024—0.035}	5.0 {0.20}
0.91—1.20 {0.036—0.047}	6.0 {0.24}
1.21—1.80 {0.0477—0.0708}	8.0 {0.31}
1.81—4.50 {0.072—0.177}	10.0 {0.394}

- Grind the shaded section indicated in the diagram below and create a hole in the part where the 3—4 plates are put together. Also, weld the plates together tightly so that gaps do not develop.

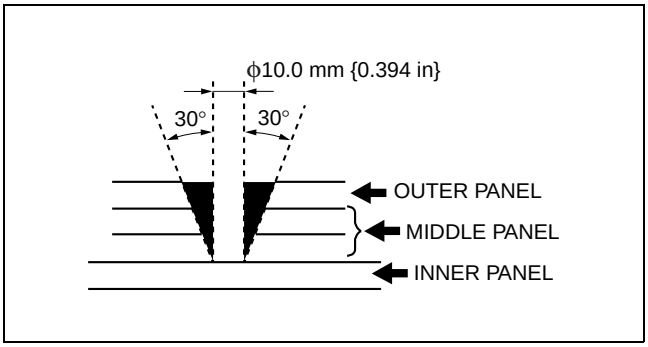

am3uub0000008

cardiagn.com

Application of Weld-through Primer

- For treatment against corrosion, remove the paint grease, and other material from the portion of new part and body to be welded, and apply weld-through primer.

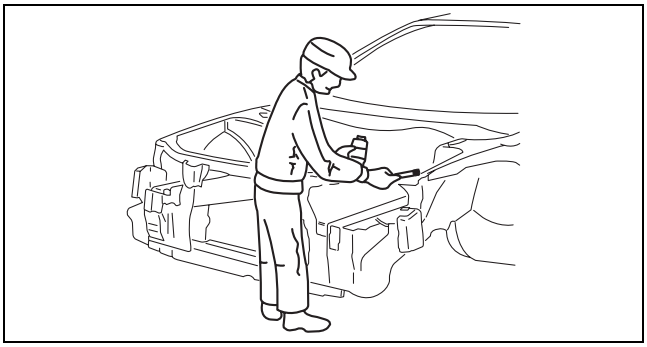

acxuub00000068

ANTICORROSION, SOUND INSULATION, AND VIBRATION INSULATION

id000000600600

Body Sealing

- Apply body sealer where necessary.
- For locations where application of body sealer is difficult after installation, apply it before installation.

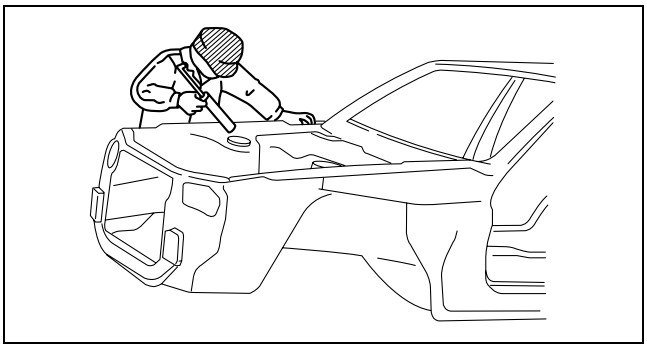

acxuub00000059

Application of Undercoating

- Apply an undercoat to the required location of the body.

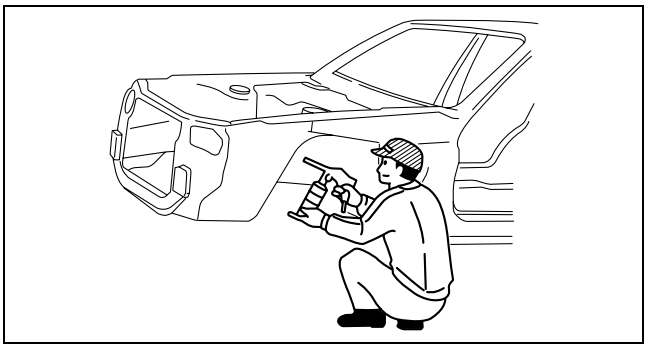

acxuub00000060

cardiagn.com

Application of Rust Inhibitor

- Apply rust inhibitor (wax, oil, etc.) to the back of the welded areas.

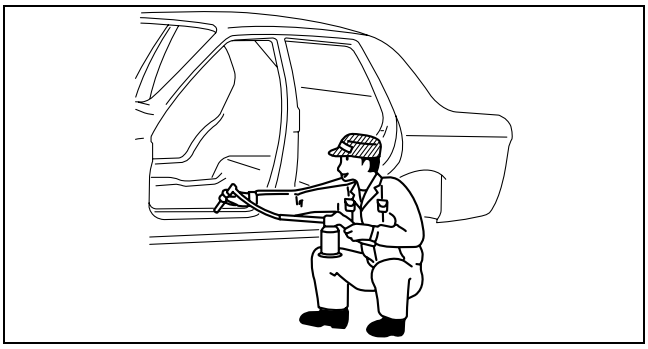

acxuub00000061

Application of Dumping Sheet

- Apply dumping sheet by heating with an infrared ray lamp.

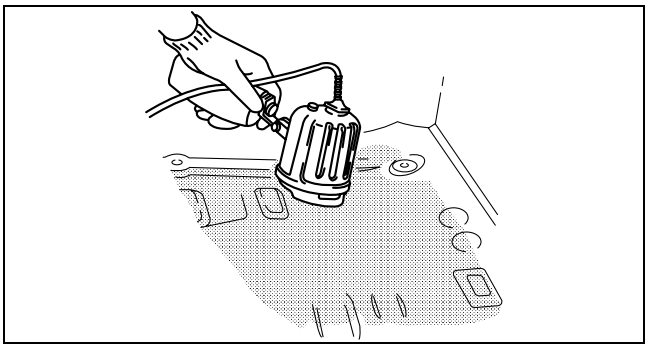

acxuub00000062

ABBREVIATION

id000000600700

Fr	Front
LH	Left Hand
RH	Right Hand
Rr	Rear

cardiagn.com

IDENTIFICATION NUMBER LOCATIONS

id000000978900

Vehicle Identification Number (VIN)

- The VIN marking position is located on the floor on the front passenger-side.

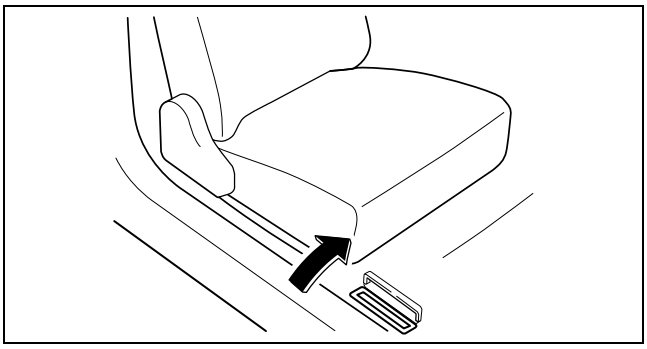

ac5wzw0000118

- If the VIN plate is adhered to the dashboard, it is located in the position shown in the figure.

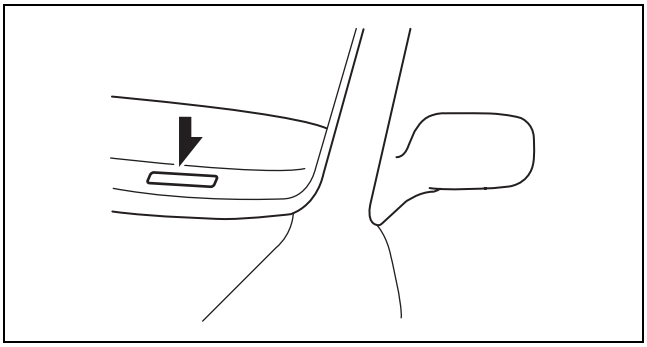

am6zzw0000387

Engine Type/Number
SKYACTIV-G 2.0, SKYACTIV-G 2.5

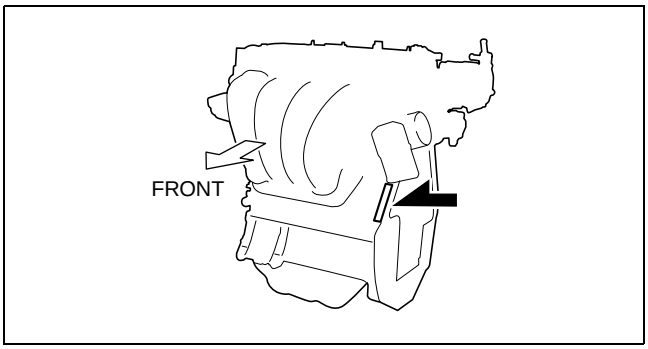

am6xuw0000622

BODY COLORS

id000000788800

Color Code and Color Name

Color Code	Color Name
A4D	Arctic white CLE
25D	Snowflake white pearl
34K	Crystal white pearl
35J	Stormy blue MC
38P	Aluminum metallic M
41V	Soul red M
41W	Jet black MC
42A	Meteor gray MC
42B	Blue reflex MC

Verification of Primary Color Mixture for Body Color

Confirm the primary color mixture for the body color at the paint manufacturer URL.

cardiagn.com

cardiagn.com

BODY & ACCESSORIES

09
SECTION

BODY STRUCTURE [CONSTRUCTION] 09-80A
BODY STRUCTURE [PANEL REPLACEMENT] . . . 09-80B
BODY STRUCTURE [WATER-PROOF AND RUST PREVENTIVE] 09-80C
BODY STRUCTURE [DIMENSIONS] 09-80D
BODY STRUCTURE [PLASTIC BODY PARTS] . . . 09-80E
BODY STRUCTURE [CONSTRUCTION STANDARD VALUES] 09-80F

09-80A BODY STRUCTURE [CONSTRUCTION]

BODY COMPONENTS CONSTRUCTION [CONSTRUCTION] 09-80A–2
ULTRA HIGH-TENSION STEEL [CONSTRUCTION] 09-80A–7
Characteristics of Ultra High-Tensile Steel Plates 09-80A–7
Range of Use and Cautions for Service 09-80A–7

cardiagn.com

BODY COMPONENTS CONSTRUCTION [CONSTRUCTION]

id098007739700

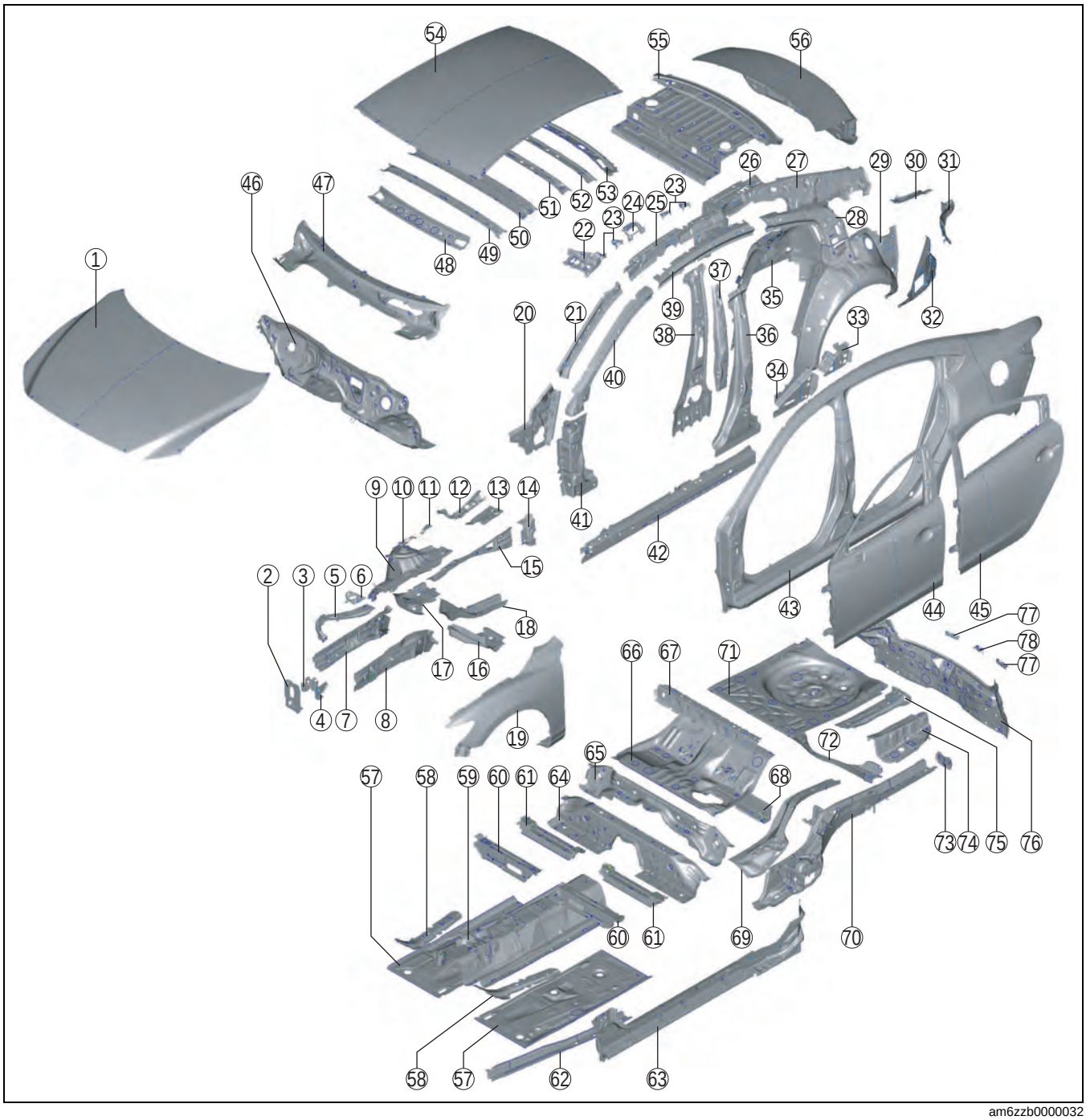

am6zzb0000032

x:Applied
-:Not applied

No.	Part Name	Ultra high-tension steel	High-tension steel	Rust proof steel	Thickness (mm) {in}
1	Hood	-	X	X	0.70 {0.03}
2	Bumper bracket	X	-	X	2.60 {0.10}
3	Suspension mounting reinforcement	-	X	X	2.90 {0.11}
4	Outer frame reinforcement	-	X	X	2.00 {0.0787}

cardiagn.com

No.	Part Name		Ultra high-tension steel	High-tension steel	Rust proof steel	Thickness (mm) {in}
5	Shroud side member component	Apron reinforcement (lower)	-	X	X	1.00 {0.0394}
		Side stay	-	-	X	1.20 {0.0472}
		Shroud side panel	-	X	X	0.90 {0.035}
6	Shroud upper reinforcement		-	-	X	0.80 {0.031)
7	Front side frame (inner)	Front	-	X	X	1.40 {0.0551}
		Rear	X	-	X	1.60 {0.0630}
8	Front side frame (outer)	Front	-	X	X	1.40 {0.0551}
		Rear	X	-	X	1.60 {0.0630}
9	Wheel apron component	Suspension housing (upper)	-	X	X	2.30 {0.091}
		Apron reinforcement	-	X	X	1.20 {0.0472}
		Apron reinforcement No.3	X	-	X	1.40 {0.0551}
		Cowl side reinforcement (inner)	-	X	X	1.00 {0.0394}
		Suspension housing (lower)	-	-	X	1.00 {0.0394}
10	Front wheel apron panel		-	-	X	0.80 {0.031}
11	Front fender junction		-	-	X	0.80 {0.031}
12	Wiper bracket		-	X	X	1.40 {0.0551}
13	Cowl plate (upper)		-	X	X	1.40 {0.0551}
14	Cowl side reinforcement (upper)		-	X	X	1.60 {0.0630}
15	Cowl side reinforcement (lower)	Front	-	X	X	0.80 {0.031}
		Rear	X	-	X	1.20 {0.0472}
16	Torque box		-	X	X	1.80 {0.0709}
17	Side member		-	-	X	1.40 {0.0551}
18	Front frame (rear)		X	-	X	2.00 {0.0787}
19	Front fender panel		-	-	X	0.70 {0.028}
20	Hinge pillar (inner)		X	-	X	1.20 {0.0472}
21	Front pillar (inner)		X	-	-	1.60 {0.0630}
22	Front pillar upper reinforcement		-	-	-	0.70 {0.028}
23	Nut plate		-	-	-	1.20 {0.0472}

cardiagn.com

No.	Part Name		Ultra high-tension steel	High-tension steel	Rust proof steel	Thickness (mm) {in}
24	Roof corner gusset		X	-	-	1.20 {0.0472}
25	Roof rail (inner)		X	-	-	1.20 {0.0472}
26	Package gusset component	Package junction	-	-	-	0.90 {0.035}
		Package reinforcement	-	-	-	0.90 {0.035}
		Package gusset	-	-	-	1.00 {0.0394}
		Wheel housing gusset	-	-	-	1.00 {0.0394}
27	Rear pillar (inner)		-	-	-	0.65 {0.026}
28	Suspension housing reinforcement component	C pillar reinforcement	X	-	-	1.40 {0.0551}
		Suspension housing reinforcement	-	-	-	0.65 {0.026}
29	Wheel housing (outer)		-	-	X	0.65 {0.026}
30	Rear fender rain rail		-	-	X	0.70 {0.028}
31	Corner plate		-	-	X	0.70 {0.028}
32	Rear fender panel (lower)		-	-	X	0.70 {0.028}
33	Tower anchor reinforcement		X	-	-	1.60 {0.0630}
34	Side sill reinforcement (rear)		X	-	X	1.80 {0.0709}
35	Wheel housing (inner)		-	-	X	0.70 {0.028}
36	Center pillar reinforcement	Upper	X	-	-	2.00 {0.0787}
		Lower	X	-	-	2.00 {0.0787}
37	Center pillar reinforcement (inner)		X	-	-	2.30 {0.0906}
38	Center pillar (inner)		-	X	X	1.20 {0.0472}
39	Roof rail reinforcement		X	-	-	1.40 {0.0551}
40	Front pillar reinforcement	Upper	X	-	-	1.60 {0.0630}
		Lower	X	-	-	1.80 {0.0709}
41	Hinge reinforcement		X	-	X	1.40 {0.0551}
42	Side sill reinforcement		X	-	X	1.40 {0.0551}
43	Cabin side outer frame		-	-	X	0.70 {0.028}
44	Front door	Outer panel	-	X	X	0.70 {0.028}
		Inner panel	-	-	X	0.65 {0.026}

cardiagn.com

No.	Part Name		Ultra high-tension steel	High-tension steel	Rust proof steel	Thickness (mm) {in}
45	Rear door	Outer panel	-	X	X	0.70 {0.028}
		Inner panel	-	-	X	0.65 {0.026}
46	Dash lower component	Upper panel	-	-	X	0.80 {0.031}
		Tunnel junction No.1	-	-	X	0.80 {0.031}
		Front frame rear reinforcement	X	-	X	1.20 {0.0472}
		Tunnel reinforcement	-	X	X	1.20 {0.0472}
47	Dash and cowl component	Cowl panel	-	-	X	0.60 {0.024}
		Dash upper panel	-	-	X	0.90 {0.035}
48	Front header		-	-	X	0.70 {0.028}
49	Roof reinforcement No.1		-	-	-	0.55 {0.022}
50	Roof reinforcement No.2		X	-	-	1.00 {0.0394}
51	Roof reinforcement No.3		-	-	-	0.55 {0.022}
52	Roof reinforcement No.4		-	-	-	0.55 {0.022}
53	Rear header		-	-	-	0.75 {0.0310}
54	Roof panel		-	-	-	0.75 {0.0310}
55	Rear package tray		-	-	-	0.60 {0.024}
56	Cabin side outer frame	Outer	-	-	X	0.70 {0.028}
		Inner	-	-	X	0.60 {0.024}
		End	-	-	X	0.60 {0.024}
57	Front floor side panel		-	-	X	0.60 {0.024}
58	Floor reinforcement	Front	X	-	-	1.80 {0.0709}
		Rear	-	X	-	1.00 {0.0394}
59	Tunnel reinforcement		X	-	X	0.90 {0.035}
60	Crossmember No.2		X	-	-	1.00 {0.0394}
61	Crossmember No.2.5		X	-	-	1.60 {0.0630}
62	Front B frame	Front	X	-	-	1.40 {0.0551}
		Rear	X	-	-	1.00 {0.0394}

cardiagn.com

No.	Part Name		Ultra high-tension steel	High-tension steel	Rust proof steel	Thickness (mm) {in}
63	Side sill (inner)	Front	-	X	X	1.40 {0.0551}
		Center	X	-	X	1.60 {0.0630}
		Rear	X	-	X	1.20 {0.0472}
64	Crossmember No.3 (lower)	Center upper	X	-	X	1.40 {0.0551}
		Side upper	X	-	X	1.60 {0.0630}
		Center lower	-	X	X	0.80 {0.031}
		Side lower	-	X	X	1.00 {0.0394}
65	Crossmember No.3 (upper)		-	-	X	0.60 {0.024}
66	Center floor panel		-	-	X	0.60 {0.024}
67	Rear floor front reinforcement		-	X	-	0.90 {0.035}
68	Crossmember No.4 (front)		-	-	X	0.90 {0.035}
69	Rear frame reinforcement		-	-	X	0.90 {0.035}
70	Rear side frame	Front	X	-	X	1.60 {0.0630}
		Center	X	-	X	1.60 {0.0630}
		Rear	X	-	X	1.40 {0.0551}
71	Trunk floor panel		-	-	X	0.60 {0.024}
72	Crossmember No.4 (rear)		-	-	X	0.90 {0.035}
73	Rear bumper bracket		X	-	X	2.00 {0.0787}
74	Floor side panel No.2		-	-	X	0.70 {0.028}
75	Floor side panel No.1	Front	X	-	X	1.20 {0.0472}
		Rear (upper)	-	X	X	2.00 {0.0787}
		Rear (lower)	X	-	X	1.60 {0.0630}
76	Rear end panel component	Rear end panel	-	-	X	0.60 {0.024}
		Rear end member	-	-	X	0.70 {0.028}
77	Rear bumper reinforcement No.1		-	-	X	1.00 {0.0394}
78	Rear bumper reinforcement No.2		-	-	X	1.00 {0.0394}

cardiagn.com

ULTRA HIGH-TENSION STEEL [CONSTRUCTION]

id098007745600

Characteristics of Ultra High-Tensile Steel Plates

- Ultra high-tensile steel plates have enhanced tensile strength compared to previous high-tensile steel plates.
- Because the strength is maintained even though the plates are thin-walled, the ultra high-tensile steel plates are used for the frames and the main frame parts which form the cabin, reducing the weight of the vehicle.
- Enhanced shock absorption has improved the safety.

Range of Use and Cautions for Service

- Because the ultra high-tensile steel is hard and it may be difficult to reform, when extracting the damaged part using a frame repair machine, perform the work verifying that other parts are not affected.
- When drilling welded parts, use a well-ground drill bit.
- After welding, inspect the weld strength. If adhesion is poor, perform arc welding (plug welding).

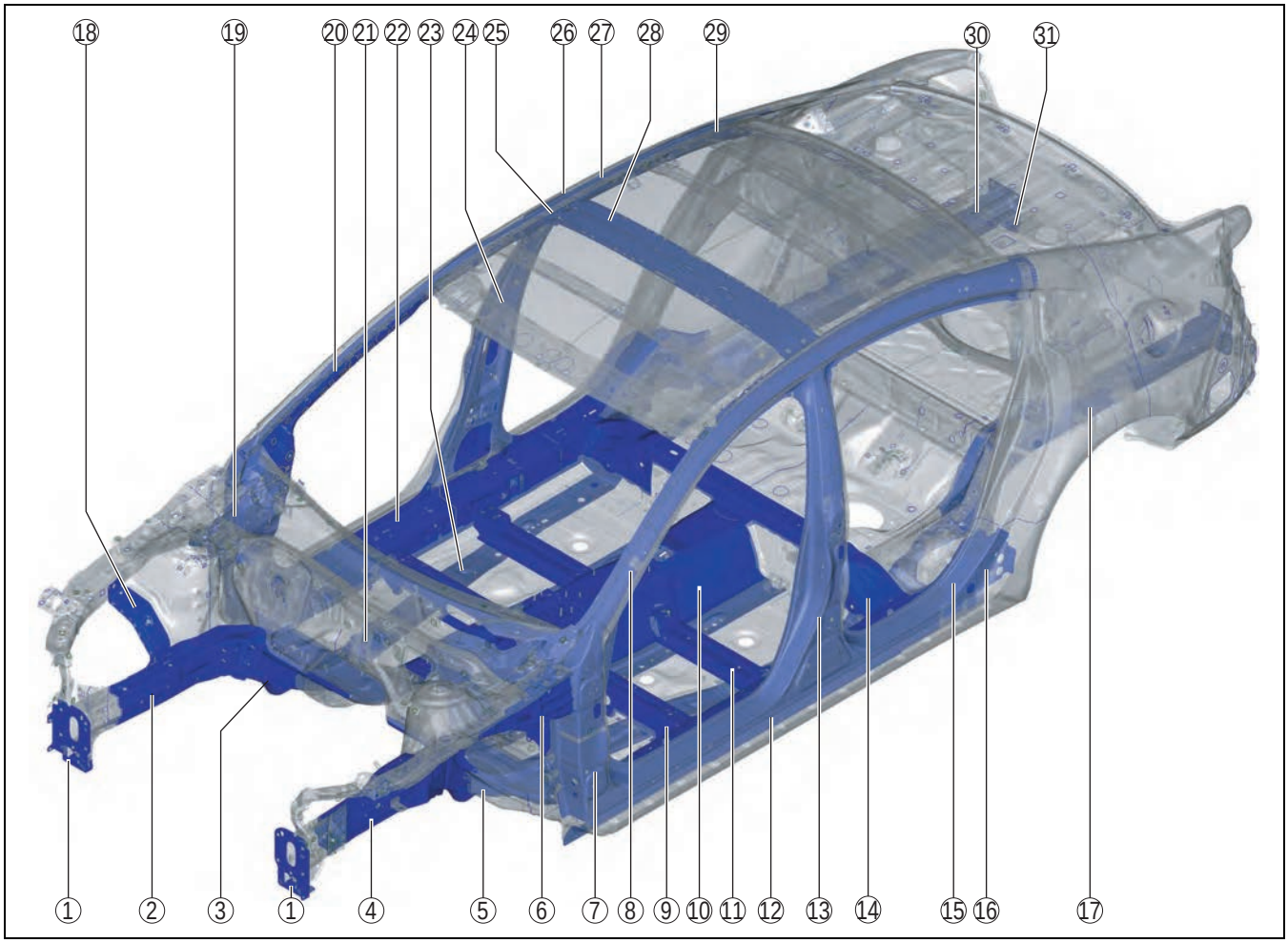

aatjjb00000297

NO.	Part Name	Strength (MPa) {kgf/cm^2, psi}
1	Bumper bracket	590 {6016, 85572}
2	Front side frame (inner, rear)	590 {6016, 85572}
3	Front frame (rear)	590 {6016, 85572}
4	Front side frame (outer, rear)	590 {6016, 85572}
5	Front frame (rear) reinforcement	590 {6016, 85572}
6	Cowl side reinforcement (lower, rear)	590 {6016, 85572}
7	Hinge reinforcement	590 {6016, 85572}
8	Front pillar reinforcement	590 {6016, 85572}
9	Crossmember No.2	590 {6016, 85572}
10	Tunnel reinforcement	590 {6016, 85572}
11	Crossmember No.2.5	780 {7954, 113130}
12	Side sill reinforcement	780 {7954, 113130}

cardiagn.com

NO.	Part Name		Strength (MPa) {kgf/cm^2, psi}
13	Center pillar reinforcement	Upper	780 {7954, 113130}
		Lower	590 {6016, 85572}
14	Crossmember No.3 (lower)	Center, upper	590 {6016, 85572}
		Side, upper	590 {6016, 85572}
15	Side sill reinforcement (rear)		590 {6016, 85572}
16	Tower anchor reinforcement		590 {6016, 85572}
17	Rear side frame	Front	590 {6016, 85572}
		Center	590 {6016, 85572}
		Rear	590 {6016, 85572}
18	Apron reinforcement No.3		590 {6016, 85572}
19	Hinge pillar (inner)		590 {6016, 85572}
20	Front pillar (inner)		590 {6016, 85572}
21	Floor reinforcement (front)		780 {7954, 113130}
22	Side sill (inner)	Center	780 {7954, 113130}
		Rear	590 {6016, 85572}
23	Front B frame		590 {6016, 85572}
24	Center pillar reinforcement (inner)		980 {9993, 142137}
25	Roof corner gusset		590 {6016, 85572}
26	Roof rail reinforcement		780 {7954, 113130}
27	Roof rail (inner)		590 {6016, 85572}
28	Roof rail reinforcement No.2		590 {6016, 85572}
29	C pillar reinforcement (upper)		780 {7954, 113130}
30	Floor side panel No.1	Front	590 {6016, 85572}
		Rear, lower	780 {7954, 113130}
31	Rear bumper bracket		590 {6016, 85572}

cardiagn.com

09-80B BODY STRUCTURE [PANEL REPLACEMENT]

BUMPER BRACKET REMOVAL [PANEL REPLACEMENT] 09-80B–3
Symbol Mark 09-80B–3
Removal Procedure 09-80B–3
BUMPER BRACKET INSTALLATION [PANEL REPLACEMENT] 09-80B–5
Symbol Mark 09-80B–5
Installation Procedure 09-80B–5
SHROUD SIDE MEMBER REMOVAL [PANEL REPLACEMENT] 09-80B–6
Symbol Mark 09-80B–6
Removal Procedure 09-80B–6
SHROUD SIDE MEMBER INSTALLATION [PANEL REPLACEMENT] 09-80B–7
Symbol Mark 09-80B–7
Installation Procedure 09-80B–7
SHROUD UPPER REINFORCEMENT REMOVAL [PANEL REPLACEMENT] 09-80B–8
Symbol Mark 09-80B–8
Removal Procedure 09-80B–8
SHROUD UPPER REINFORCEMENT INSTALLATION [PANEL REPLACEMENT] 09-80B–9
Symbol Mark 09-80B–9
Installation Procedure 09-80B–9
COWL SIDE REINFORCEMENT REMOVAL [PANEL REPLACEMENT] 09-80B–10
Symbol Mark 09-80B–10
Removal Procedure 09-80B–10
COWL SIDE REINFORCEMENT INSTALLATION [PANEL REPLACEMENT] 09-80B–11
Symbol Mark 09-80B–11
Installation Procedure 09-80B–11
WIPER BRACKET REMOVAL [PANEL REPLACEMENT] 09-80B–12
Symbol Mark 09-80B–12
Removal Procedure 09-80B–12
WIPER BRACKET INSTALLATION [PANEL REPLACEMENT] 09-80B–13
Symbol Mark 09-80B–13
Installation Procedure 09-80B–13
WHEEL APRON COMPONENT REMOVAL [PANEL REPLACEMENT] 09-80B–14
Symbol Mark 09-80B–14
Removal Procedure 09-80B–14
WHEEL APRON COMPONENT INSTALLATION [PANEL REPLACEMENT] 09-80B–16
Symbol Mark 09-80B–16
Installation Procedure 09-80B–16
FRONT FENDER JUNCTION REMOVAL [PANEL REPLACEMENT] 09-80B–18
Symbol Mark 09-80B–18
Removal Procedure 09-80B–18
FRONT FENDER JUNCTION INSTALLATION [PANEL REPLACEMENT] 09-80B–19
Symbol Mark 09-80B–19
Installation Procedure 09-80B–19
FRONT SIDE FRAME REMOVAL [PANEL REPLACEMENT] 09-80B–20
Symbol Mark 09-80B–20
Removal Procedure 09-80B–20
FRONT SIDE FRAME INSTALLATION [PANEL REPLACEMENT] 09-80B–21
Symbol Mark 09-80B–21
Installation Procedure 09-80B–21
FRONT SIDE FRAME (PARTIAL CUTTING) REMOVAL [PANEL REPLACEMENT] 09-80B–22
Symbol Mark 09-80B–22
Removal Procedure 09-80B–22
FRONT SIDE FRAME (PARTIAL CUTTING) INSTALLATION [PANEL REPLACEMENT] 09-80B–24
Symbol Mark 09-80B–24
Installation Procedure 09-80B–24
COWL UPPER PLATE REMOVAL [PANEL REPLACEMENT] 09-80B–30
Symbol Mark 09-80B–30
Removal Procedure 09-80B–30
COWL UPPER PLATE INSTALLATION [PANEL REPLACEMENT] 09-80B–31
Symbol Mark 09-80B–31
Installation Procedure 09-80B–31
TORQUE BOX REMOVAL [PANEL REPLACEMENT] 09-80B–32
Symbol Mark 09-80B–32
Removal Procedure 09-80B–32
TORQUE BOX INSTALLATION [PANEL REPLACEMENT] 09-80B–34
Symbol Mark 09-80B–34
Installation Procedure 09-80B–34
SIDE MEMBER REMOVAL [PANEL REPLACEMENT] 09-80B–36
Symbol Mark 09-80B–36
Removal Procedure 09-80B–36
SIDE MEMBER INSTALLATION [PANEL REPLACEMENT] 09-80B–37
Symbol Mark 09-80B–37
Installation Procedure 09-80B–37
FRONT FRAME (REAR) REMOVAL [PANEL REPLACEMENT] 09-80B–38
Symbol Mark 09-80B–38
Removal Procedure 09-80B–38
FRONT FRAME (REAR) INSTALLATION [PANEL REPLACEMENT] 09-80B–39
Symbol Mark 09-80B–39
Installation Procedure 09-80B–39
FRONT PILLAR REMOVAL [PANEL REPLACEMENT] 09-80B–40
Symbol Mark 09-80B–40
Removal Procedure 09-80B–40
FRONT PILLAR INSTALLATION [PANEL REPLACEMENT] 09-80B–44
Symbol Mark 09-80B–44
Installation Procedure 09-80B–44
CENTER PILLAR REMOVAL [PANEL REPLACEMENT] 09-80B–47
Symbol Mark 09-80B–47

cardiagn.com

Removal Procedure 09-80B–47
CENTER PILLAR INSTALLATION [PANEL REPLACEMENT] 09-80B–52
Symbol Mark 09-80B–52
Installation Procedure 09-80B–52
SIDE SILL PANEL REMOVAL [PANEL REPLACEMENT] 09-80B–55
Symbol Mark 09-80B–55
Removal Procedure 09-80B–55
SIDE SILL PANEL INSTALLATION [PANEL REPLACEMENT] 09-80B–58
Symbol Mrak 09-80B–58
Installation Procedure 09-80B–58
REAR FENDER PANEL REMOVAL [PANEL REPLACEMENT] 09-80B–61
Symbol Mark 09-80B–61
Removal Procedure 09-80B–61
REAR FENDER PANEL INSTALLATION [PANEL REPLACEMENT] 09-80B–64
Symbol Mark 09-80B–64
Installation Procedure 09-80B–64
REAR FENDER PANEL (LOWER) REMOVAL [PANEL REPLACEMENT] 09-80B–67
Symbol Mark 09-80B–67
Removal Procedure 09-80B–67
REAR FENDER PANEL (LOWER) INSTALLATION [PANEL REPLACEMENT] 09-80B–68
Symbol Mark 09-80B–68
Installation Procedure 09-80B–68
CORNER PLATE REMOVAL [PANEL REPLACEMENT] 09-80B–69
Symbol Mark 09-80B–69
Removal Procedure 09-80B–69
CORNER PLATE INSTALLATION [PANEL REPLACEMENT] 09-80B–70
Symbol Mark 09-80B–70
Installation Procedure 09-80B–70
REAR FENDER RAIN RAIL REMOVAL [PANEL REPLACEMENT] 09-80B–71
Symbol Mark 09-80B–71
Removal Procedure 09-80B–71
REAR FENDER RAIN RAIL INSTALLATION [PANEL REPLACEMENT] 09-80B–72
Symbol Mark 09-80B–72
Installation Procedure 09-80B–72
REAR END PANEL REMOVAL [PANEL REPLACEMENT] 09-80B–73
Symbol Mark 09-80B–73
Removal Procedure 09-80B–73
REAR END PANEL INSTALLATION [PANEL REPLACEMENT] 09-80B–74
Symbol Mark 09-80B–74
Installation Procedure 09-80B–74
FLOOR SIDE PANEL REMOVAL [PANEL REPLACEMENT] 09-80B–75
Symbol Mark 09-80B–75
Removal Procedure 09-80B–75
FLOOR SIDE PANEL INSTALLATION [PANEL REPLACEMENT] 09-80B–77
Symbol Mark 09-80B–77
Installation Procedure 09-80B–77
TRUNK FLOOR PANEL REMOVAL [PANEL REPLACEMENT] 09-80B–79
Symbol Mark 09-80B–79
Removal Procedure 09-80B–79
TRUNK FLOOR PANEL INSTALLATION [PANEL REPLACEMENT] 09-80B–80
Symbol Mark 09-80B–80
Installation Procedure 09-80B–80
REAR SIDE FRAME REMOVAL [PANEL REPLACEMENT] 09-80B–82
Symbol Mark 09-80B–82
Removal Procedure 09-80B–82
REAR SIDE FRAME INSTALLATION [PANEL REPLACEMENT] 09-80B–84
Symbol Mark 09-80B–84
Installation Procedure 09-80B–84
ROOF PANEL REMOVAL [PANEL REPLACEMENT] 09-80B–86
Symbol Mark 09-80B–86
Removal Procedure 09-80B–86
ROOF PANEL INSTALLATION [PANEL REPLACEMENT] 09-80B–88
Symbol Mark 09-80B–88
Installation Procedure 09-80B–88

cardiagn.com

BUMPER BRACKET REMOVAL [PANEL REPLACEMENT]

id098008999500

Symbol Mark

SYMBOL MARK	MEANING
●	SPOT WELDING
	CONTINUOUS CO_2 ARC WELDING (CUT-AND-JOIN LOCATION)
	ROUGH CUT LOCATION

am6zzb0000032

Removal Procedure

1. Rough cut the location indicated by (A) shown in the figure.

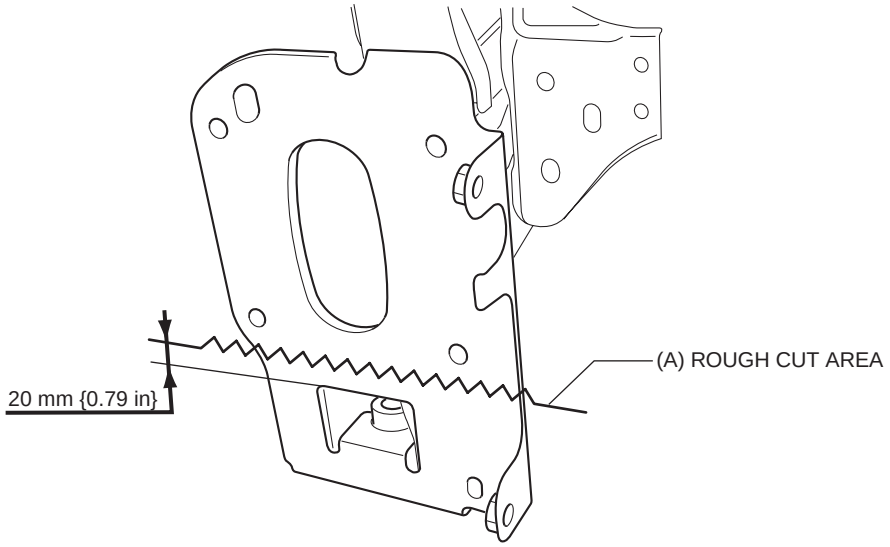

am6zzb0000032

2. Grind the 6 locations indicated by (B) shown in the figure.

Caution

- **When grinding 6 locations indicated by (B) shown in the figure and the front side frame is damaged, there is a possibility that attachment of a bracket may become difficulty. When grinding 6 locations indicated by (B) shown in the figure, the amount removed will affect the quality of the installation.**

cardiagn.com

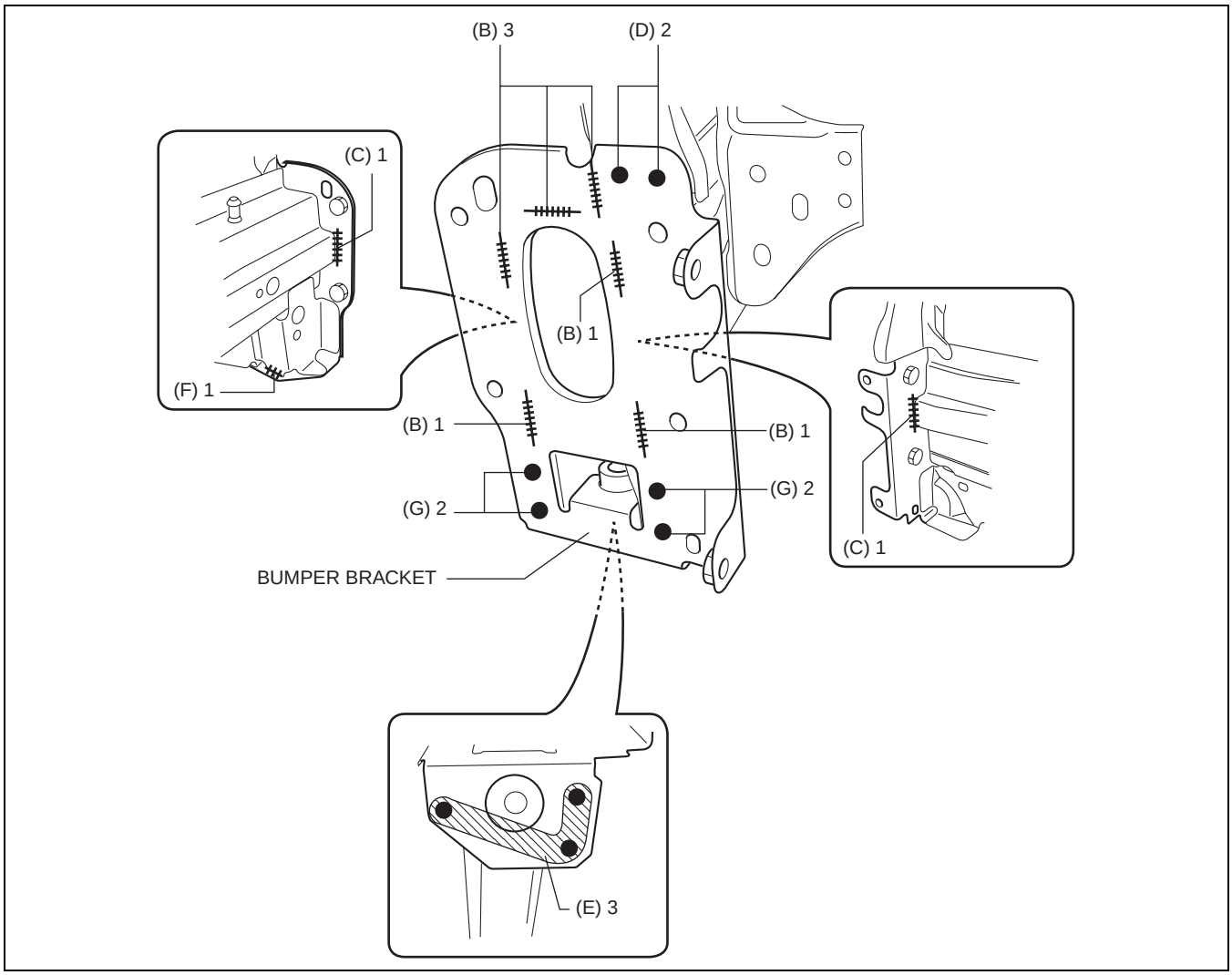

am6zzb0000032

3. Grind the 2 locations indicated by (C) shown in the figure.
4. Drill the 2 locations indicated by (D) shown in the figure, then remove the half portion above the bumper bracket.
5. Drill the 3 locations indicated by (E) shown in the figure.
6. Grind the 1 location indicated by (F) shown in the figure.
7. Drill the 4 locations indicated by (G) shown in the figure.
8. Remove the half portion below the bumper bracket.

cardiagn.com

BUMPER BRACKET INSTALLATION [PANEL REPLACEMENT]

id098008999600

Symbol Mark

SYMBOL MARK	MEANING
■	PLUG WELDING (ARC WELDING)
┼┼┼┼┼┼┼┼┼┼┼┼┼┼┼┼┼┼┼┼┼┼┼┼┼┼┼┼┼┼	CONTINUOUS ARC WELDING (CUT-AND-JOIN LOCATION)

am6zzb0000032

Installation Procedure

1. When installing new parts, measure and adjust the body as necessary to conform with standard dimensions.
2. Drill holes for the plug welding before installing the new parts.
3. After temporarily installing new parts, make sure the related parts fit properly.
4. Plug weld the 6 locations indicated by (A) shown in the figure.

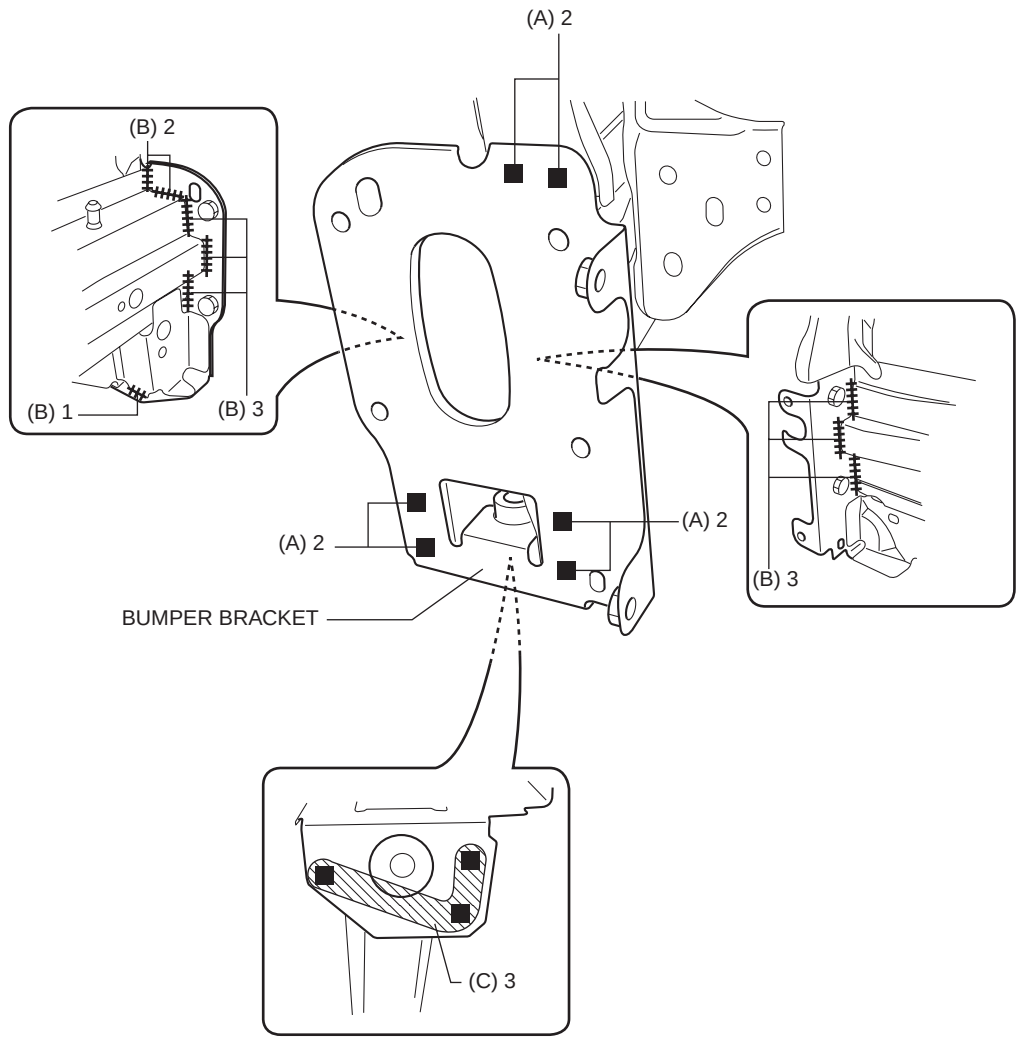

am6zzb0000032

5. Continuos weld the 9 locations indicated by (B) shown in the figure from the front wheel housing and engine room.

   Note
   - A flange part is fixed by a hand vise, and where a welded area is press-fitted, welding is performed so that a clearance does not open in the part welded.

6. Plug weld the 3 locations indicated by (C) shown in the figure, then install the bumper bracket.

cardiagn.com

SHROUD SIDE MEMBER REMOVAL [PANEL REPLACEMENT]

id098008919000

Symbol Mark

SYMBOL MARK	MEANING
●	SPOT WELDING

am6zzb0000032

Removal Procedure

1. Drill the 3 locations indicated by (A) shown in the figure.

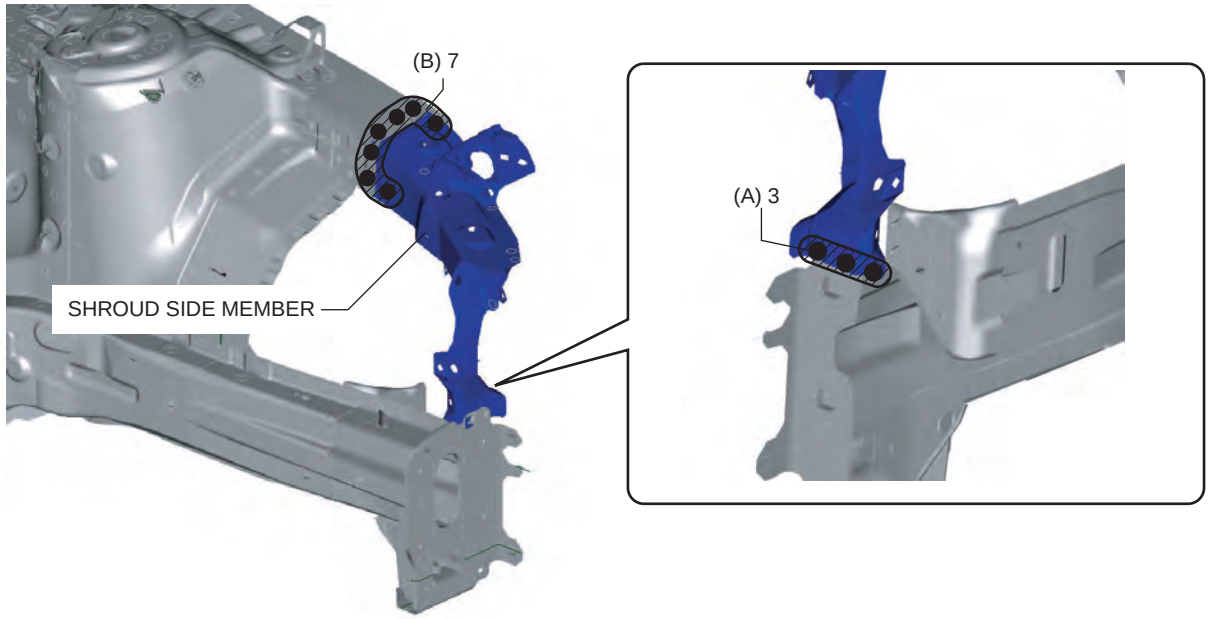

aatjjb00000172

2. Drill the 7 locations indicated by (B) shown in the figure.
3. Remove the shroud side member.

cardiagn.com

SHROUD SIDE MEMBER INSTALLATION [PANEL REPLACEMENT]

id098008919100

Symbol Mark

SYMBOL MARK	MEANING
■	PLUG WELDING (ARC WELDING)

am6zzb0000032

Installation Procedure

1. When installing new parts, measure and adjust the body as necessary to conform with standard dimensions.
2. Drill holes for the plug welding before installing the new parts.
3. After temporarily installing new parts, make sure the related parts fit properly.
4. Plug weld the 7 locations indicated by (A) shown in the figure.

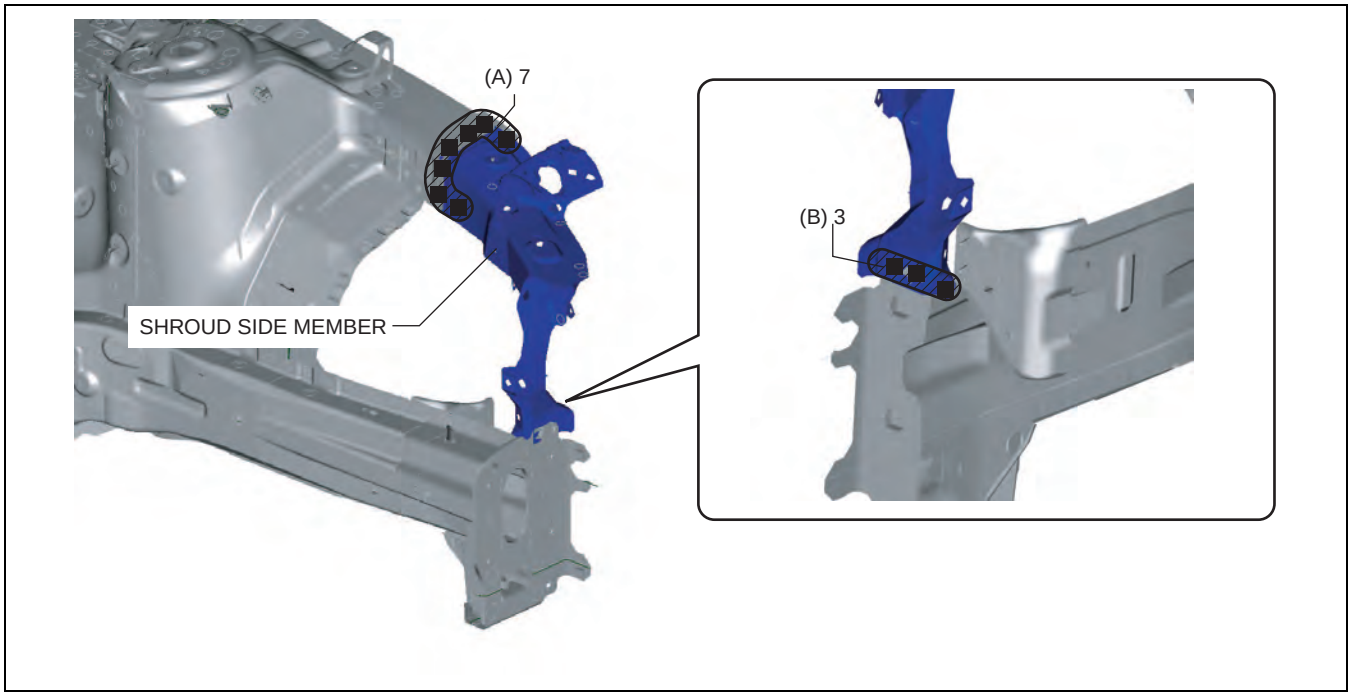

aatjjb00000173

5. Plug weld the 3 locations indicated by (B) shown in the figure, then install the shroud side member.

cardiagn.com

SHROUD UPPER REINFORCEMENT REMOVAL [PANEL REPLACEMENT]

id098008927900

Symbol Mark

SYMBOL MARK	MEANING
●	SPOT WELDING

am6zzb0000033

Removal Procedure

1. Drill the 3 locations shown in the figure.

Note

- When drilling the 3 locations shown in the figure, do not drill a hole all the way through or there could be a problem when installing the new part.

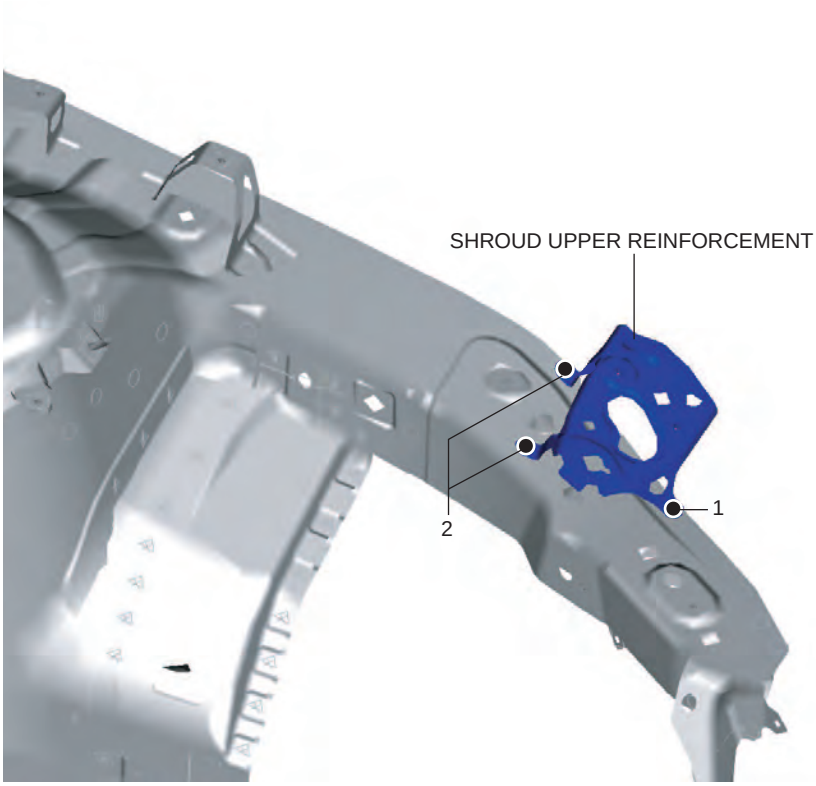

am6zzb0000033

2. Remove the shroud upper reinforcement.

cardiagn.com

SHROUD UPPER REINFORCEMENT INSTALLATION [PANEL REPLACEMENT]

id098008928000

Symbol Mark

SYMBOL MARK	MEANING
■	PLUG WELDING (CO_2 ARC WELDING)

am6zzb0000033

Installation Procedure

1. When installing new parts, measure and adjust the body as necessary to conform with standard dimensions.
2. Drill holes for the plug welding before installing the new parts.
3. After temporarily installing new parts, make sure the related parts fit properly.
4. Plug weld 3 locations shown in the figure, then install the shroud upper reinforcement.

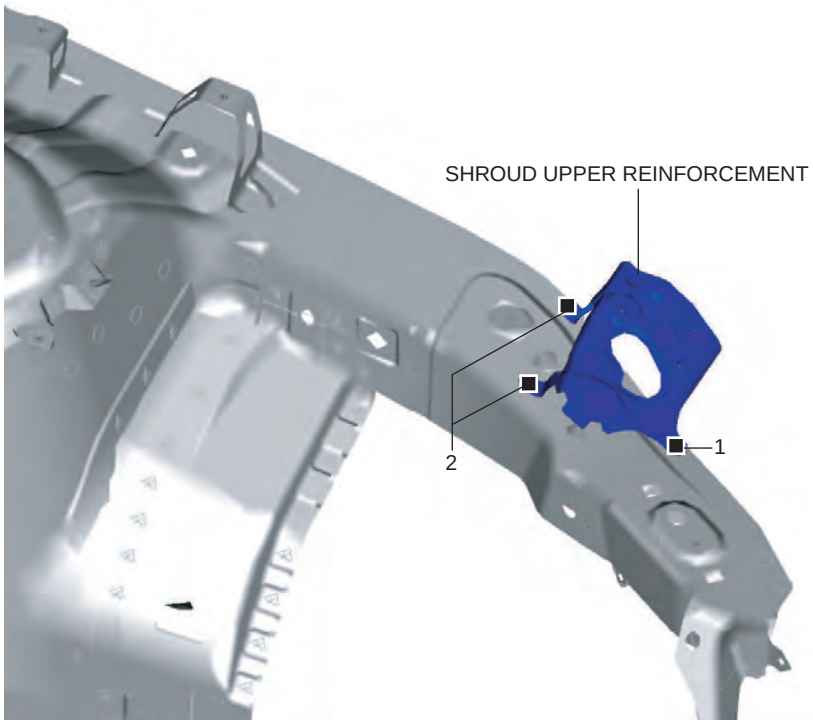

am6zzb0000033

cardiagn.com

COWL SIDE REINFORCEMENT REMOVAL [PANEL REPLACEMENT]

id098008741700

Symbol Mark

SYMBOL MARK	MEANING
●	SPOT WELDING

am6zzb0000032

Removal Procedure

1. Drill the 29 locations indicated by (A) shown in the figure.

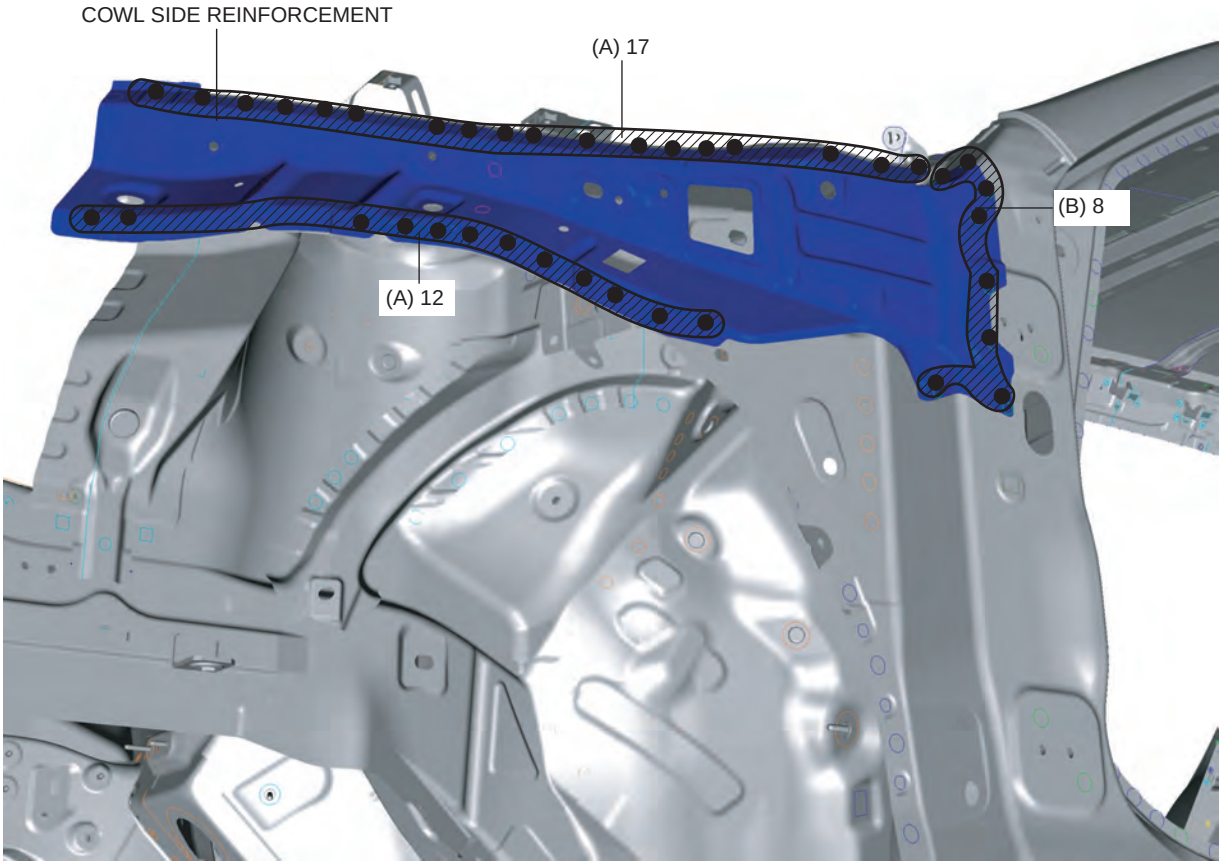

am6zzb0000033

2. Drill the 8 locations indicated by (B) shown in the figure, then remove the cowl side reinforcement.

cardiagn.com

COWL SIDE REINFORCEMENT INSTALLATION [PANEL REPLACEMENT]

id098008741800

Symbol Mark

SYMBOL MARK	MEANING
■	PLUG WELDING (CO_2 ARC WELDING)

am6zzb0000033

Installation Procedure

1. When installing new parts, measure and adjust the body as necessary to conform with standard dimensions.
2. Drill holes for the plug welding before installing the new parts.
3. After temporarily installing new parts, make sure the related parts fit properly.
4. Plug weld 8 locations indicated by (A) shown in the figure.

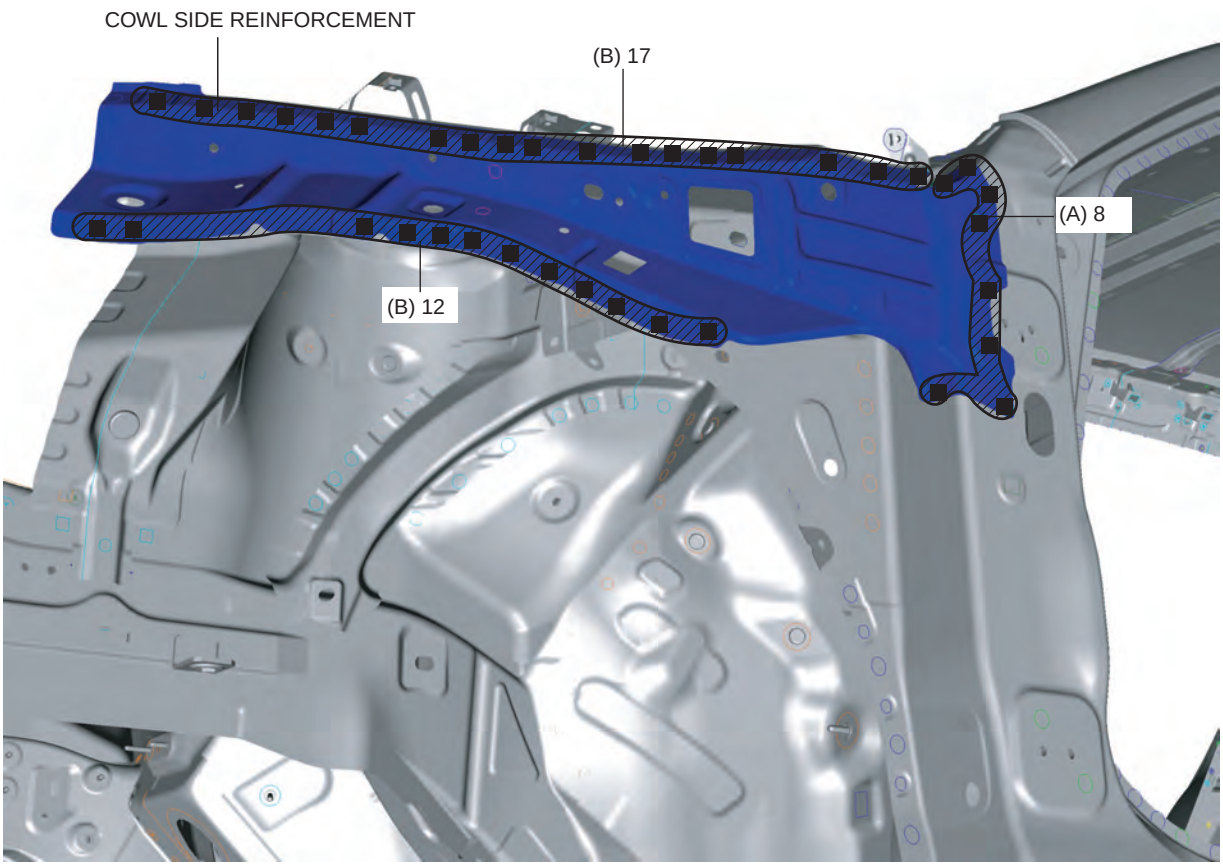

am6zzb0000033

5. Plug weld 29 locations indicated by (B) shown in the figure, then install the cowl side reinforcement.

cardiagn.com

WIPER BRACKET REMOVAL [PANEL REPLACEMENT]

id098008968800

Symbol Mark

SYMBOL MARK	MEANING
●	SPOT WELDING

am6zzb0000033

Removal Procedure

1. Drill the 1 location indicated by (A) from the inside shown in the figure.

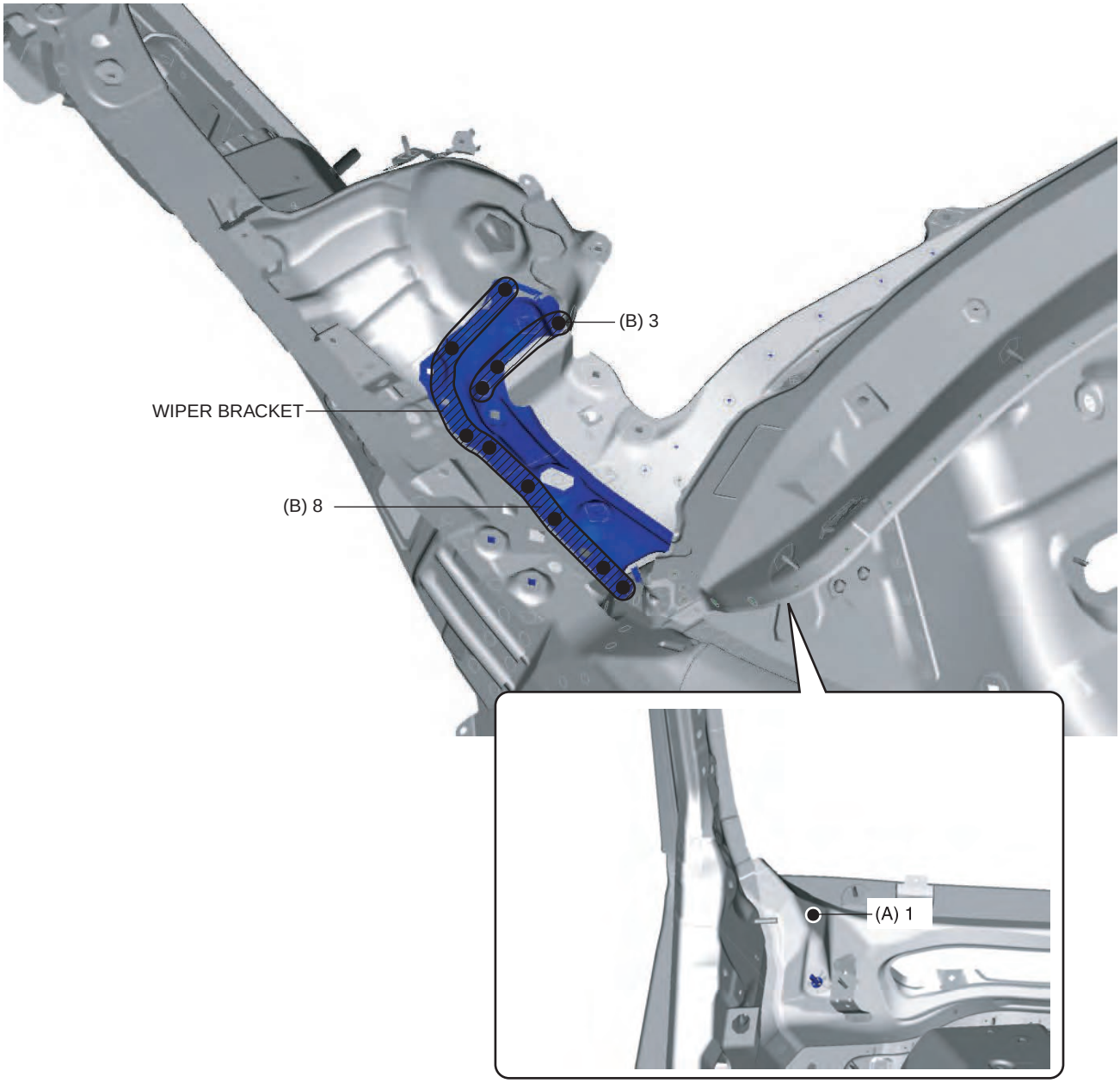

am6zzb0000033

2. Drill the 11 locations indicated by (B) shown in the figure, then remove the wiper bracket.

cardiagn.com

WIPER BRACKET INSTALLATION [PANEL REPLACEMENT]

id098008968900

Symbol Mark

SYMBOL MARK	MEANING
■	PLUG WELDING (CO_2 ARC WELDING)

am6zzb0000033

Installation Procedure

1. When installing new parts, measure and adjust the body as necessary to conform with standard dimensions.
2. Drill holes for the plug welding before installing the new parts.
3. After temporarily installing new parts, make sure the related parts fit properly.
4. Plug weld the 11 locations indicated by (A) shown in the figure.

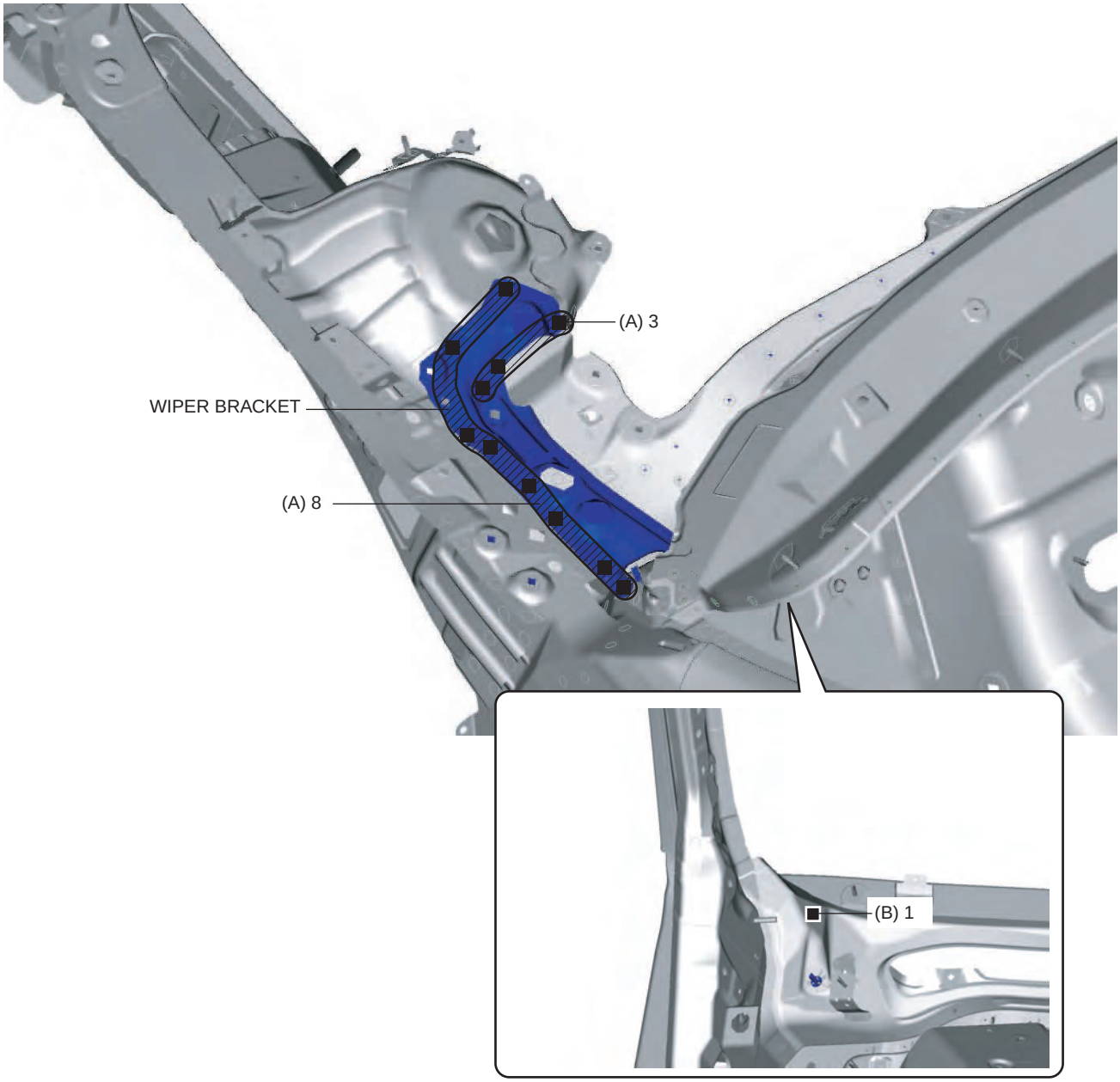

am6zzb0000034

5. Plug weld the 1 location indicated by (B) from the inside shown in the figure, then install the wiper bracket.

cardiagn.com

WHEEL APRON COMPONENT REMOVAL [PANEL REPLACEMENT]

id098008746000

Symbol Mark

SYMBOL MARK	MEANING
●	SPOT WELDING
+	ARC WELDING (SPOT WELDING)

am6zzb0000034

Removal Procedure

1. Drill the 16 locations (driver-side), 15 locations (passenger-side) indicated by (A) from the wheel housing shown in the figure.

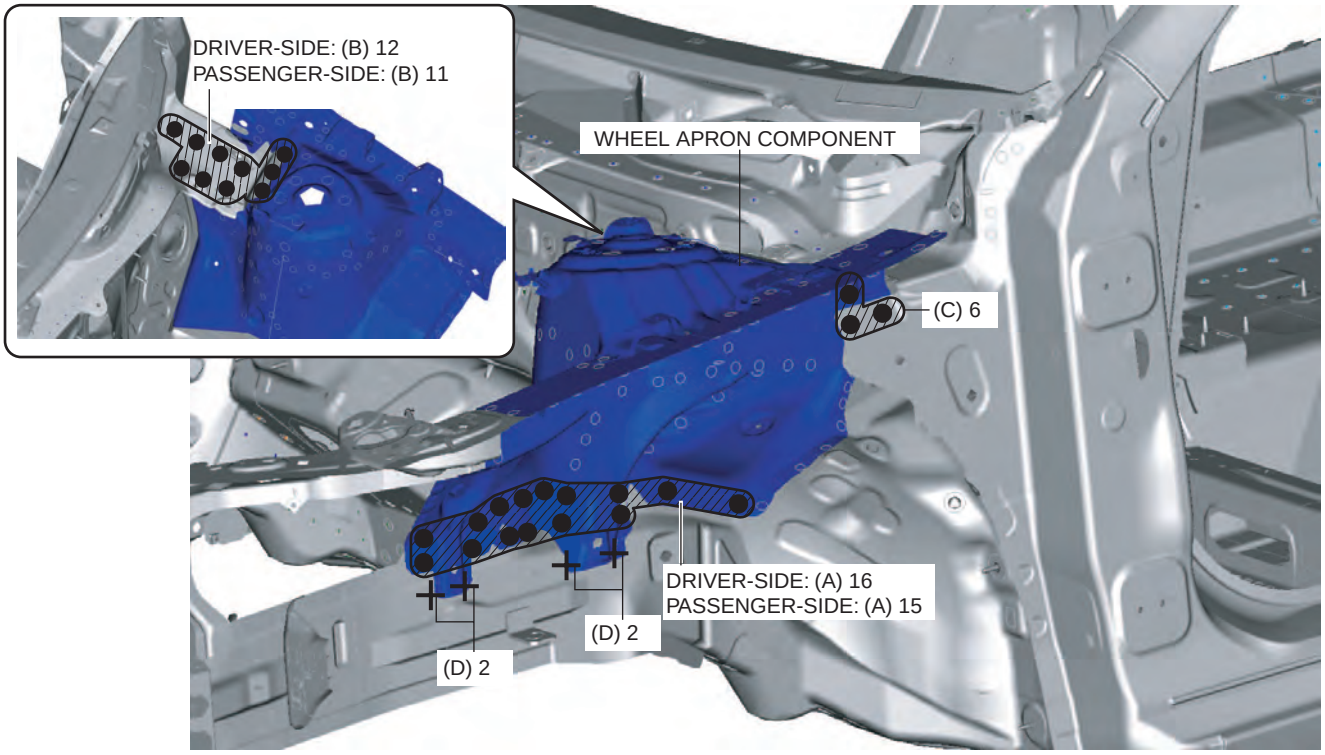

am6zzb0000034

2. Drill the 12 locations (driver-side), 11 locations (passenger-side) indicated by (B) shown in the figure.
3. Drill the 6 locations indicated by (C) shown in the figure.
4. Grind the 4 locations indicated by (D) shown in the figure.
5. Drill the 11 locations indicated by (E) from the inside shown in the figure.

cardiagn.com

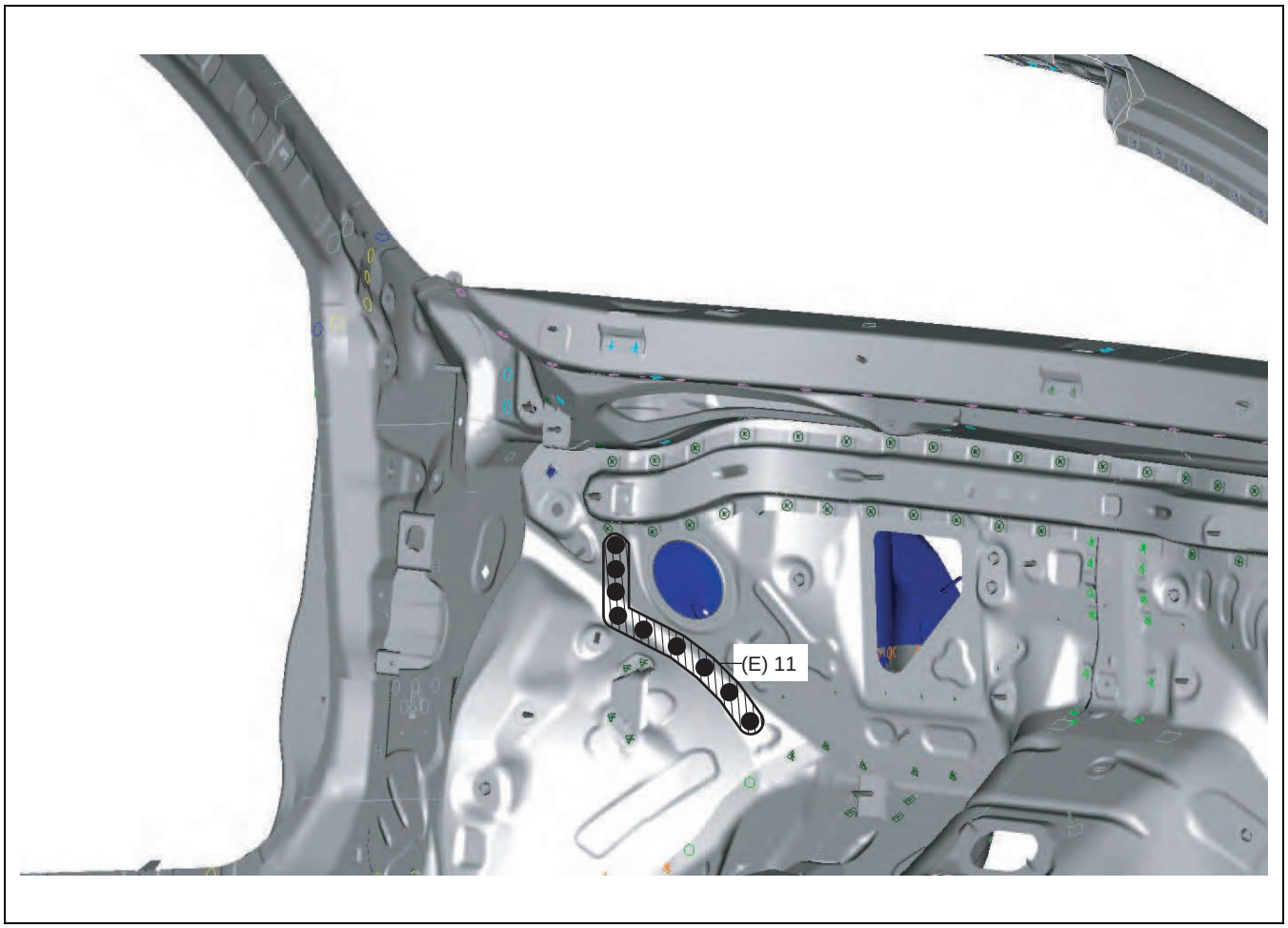

aatjjb00000181

6. Remove the wheel apron component.

cardiagn.com

WHEEL APRON COMPONENT INSTALLATION [PANEL REPLACEMENT]

id098008746100

Symbol Mark

SYMBOL MARK	MEANING
■	PLUG WELDING (CO_2 ARC WELDING)
+	ARC WELDING (SPOT WELDING)

am6zzb0000034

Installation Procedure

1. When installing new parts, measure and adjust the body as necessary to conform with standard dimensions.
2. Drill holes 16 locations (driver-side), 15 locations (passenger-side) indicated by (A) for the plug welding before installing the new parts.
3. After temporarily installing new parts, make sure the related parts fit properly.
4. Plug weld the 16 locations (driver-side), 15 locations (passenger-side) indicated by (A) from the wheel housing shown in the figure.

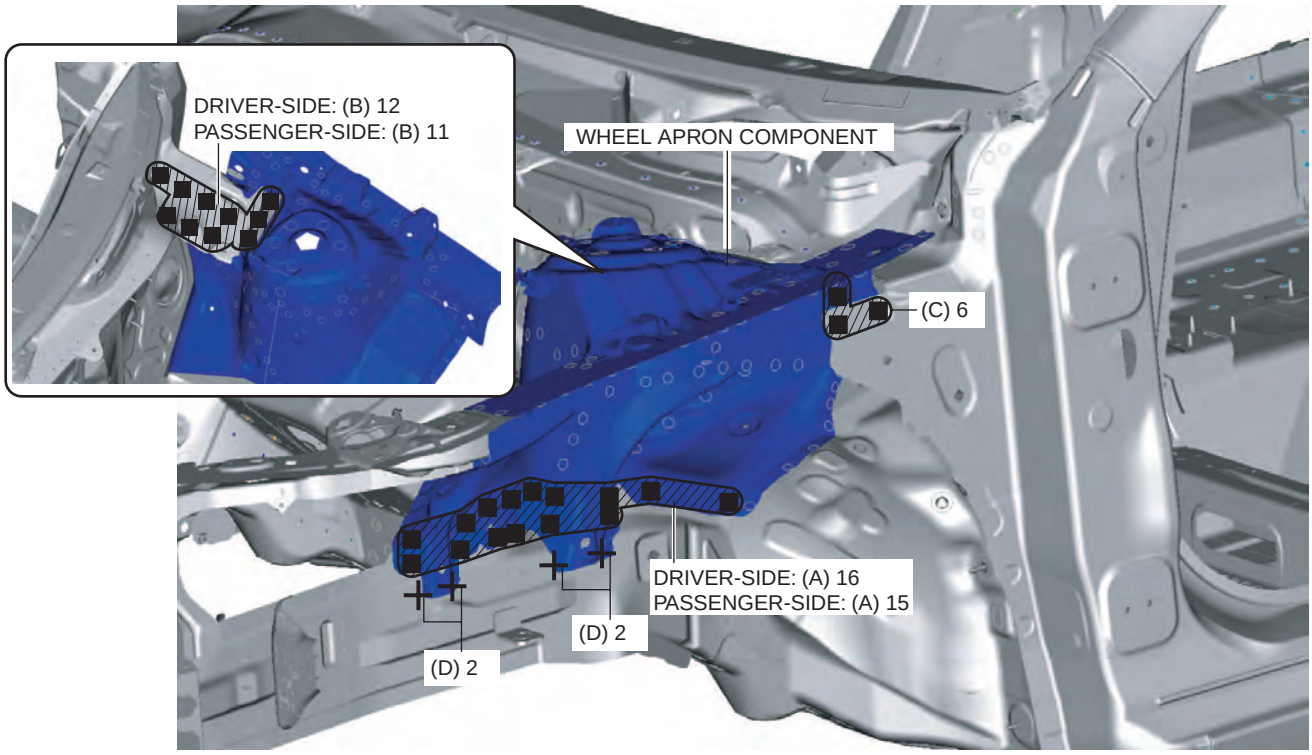

am6zzb0000034

5. Plug weld the 12 locations (driver-side), 11 locations (passenger-side) indicated by (B) shown in the figure.
6. Plug weld the 6 locations indicated by (C) shown in the figure.
7. Arc weld the 4 locations indicated by (D) shown in the figure.
8. Plug weld the 11 locations indicated by (E) from the inside shown in the figure, then install the wheel apron component.

cardiagn.com

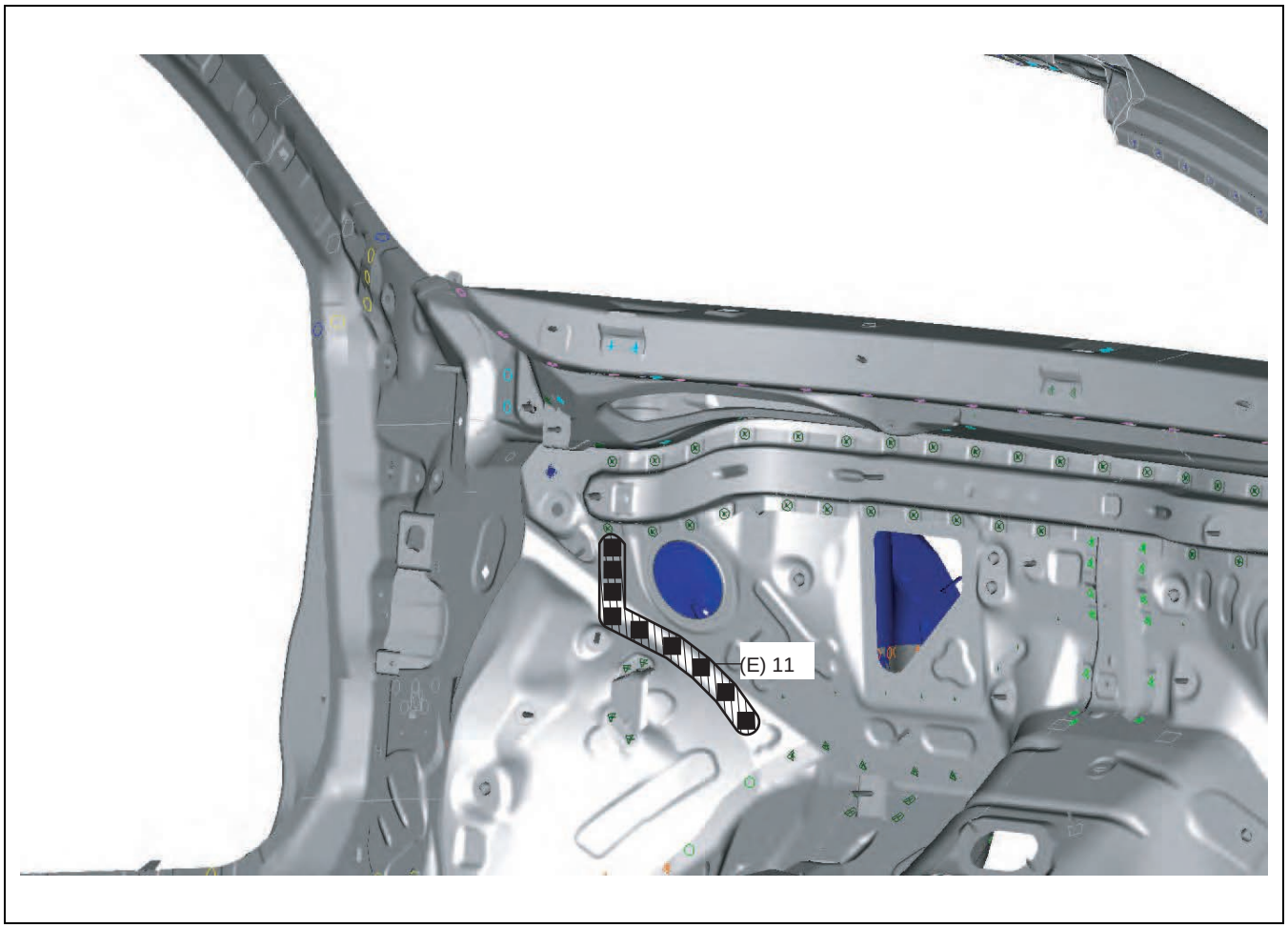

aatjjb00000184

cardiagn.com

FRONT FENDER JUNCTION REMOVAL [PANEL REPLACEMENT]

id098008828300

Symbol Mark

SYMBOL MARK	MEANING
●	SPOT WELDING

am6zzb0000034

Removal Procedure

1. Drill the 3 locations indicated shown in the figure.

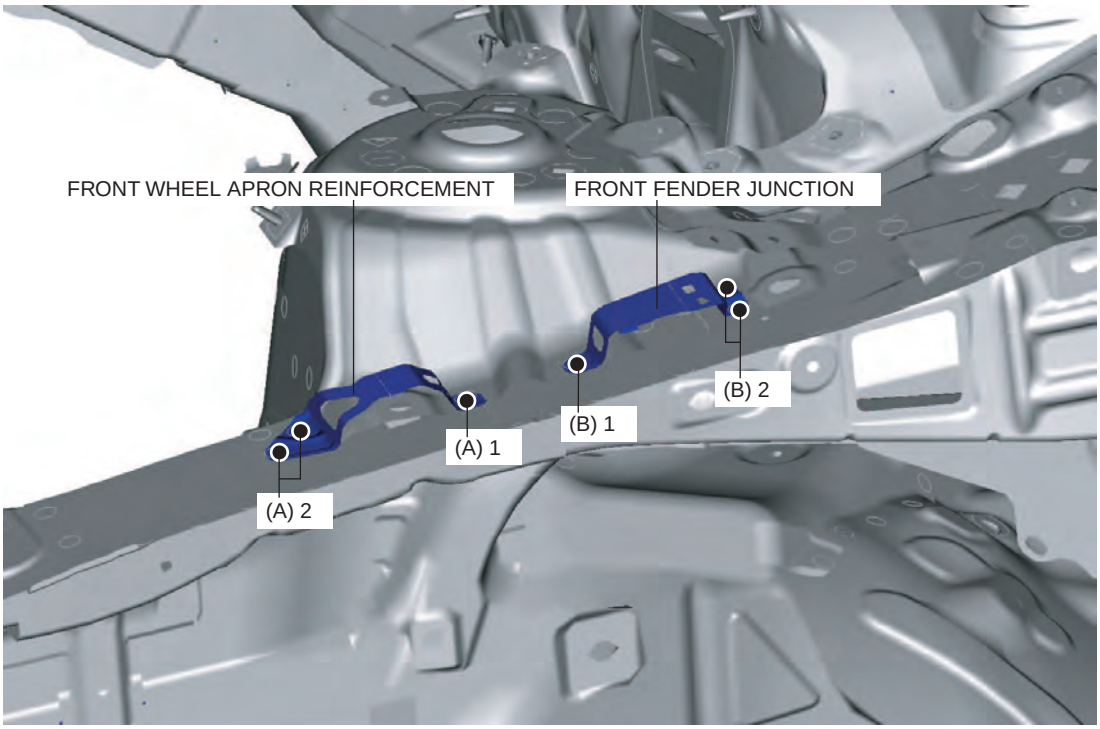

am6zzb0000034

2. Remove the front wheel apron reinforcement.
3. Drill the 3 locations indicated by (B) shown in the figure.
4. Remova the front fender junction.

cardiagn.com

FRONT FENDER JUNCTION INSTALLATION [PANEL REPLACEMENT]

id098008828400

Symbol Mark

SYMBOL MARK	MEANING
■	PLUG WELDING (CO_2 ARC WELDING)

am6zzb0000034

Installation Procedure

1. When installing new parts, measure and adjust the body as necessary to conform with standard dimensions.
2. Drill holes for the plug welding before installing the new parts.
3. After temporarily installing new parts, make sure the related parts fit properly.
4. Plug weld the 3 locations indicated by (A) shown in the figure, then install the front wheel apron reinforcement.

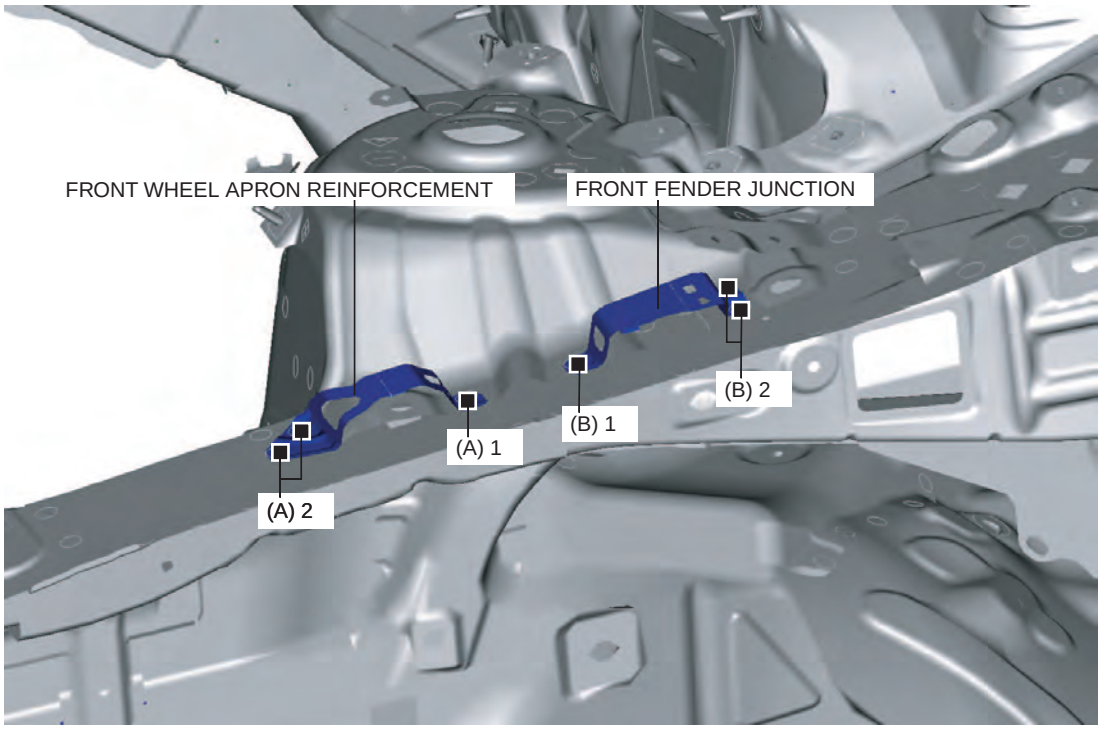

am6zzb0000034

5. Plug weld the 3 locations indicated by (B) shown in the figure, then install the front fender junction.

cardiagn.com

FRONT SIDE FRAME REMOVAL [PANEL REPLACEMENT]

id098008605900

Symbol Mark

SYMBOL MARK	MEANING
●	SPOT WELDING

am6zzb0000034

Removal Procedure

1. Drill the 15 locations indicated by (A) shown in the figure.
2. Drill the 4 locations indicated by (B) shown in the figure.

Note

- When drilling the 4 locations indicated by (B) shown in the figure, do not drill a hole all the way through or there could be a problem when installing the new part.

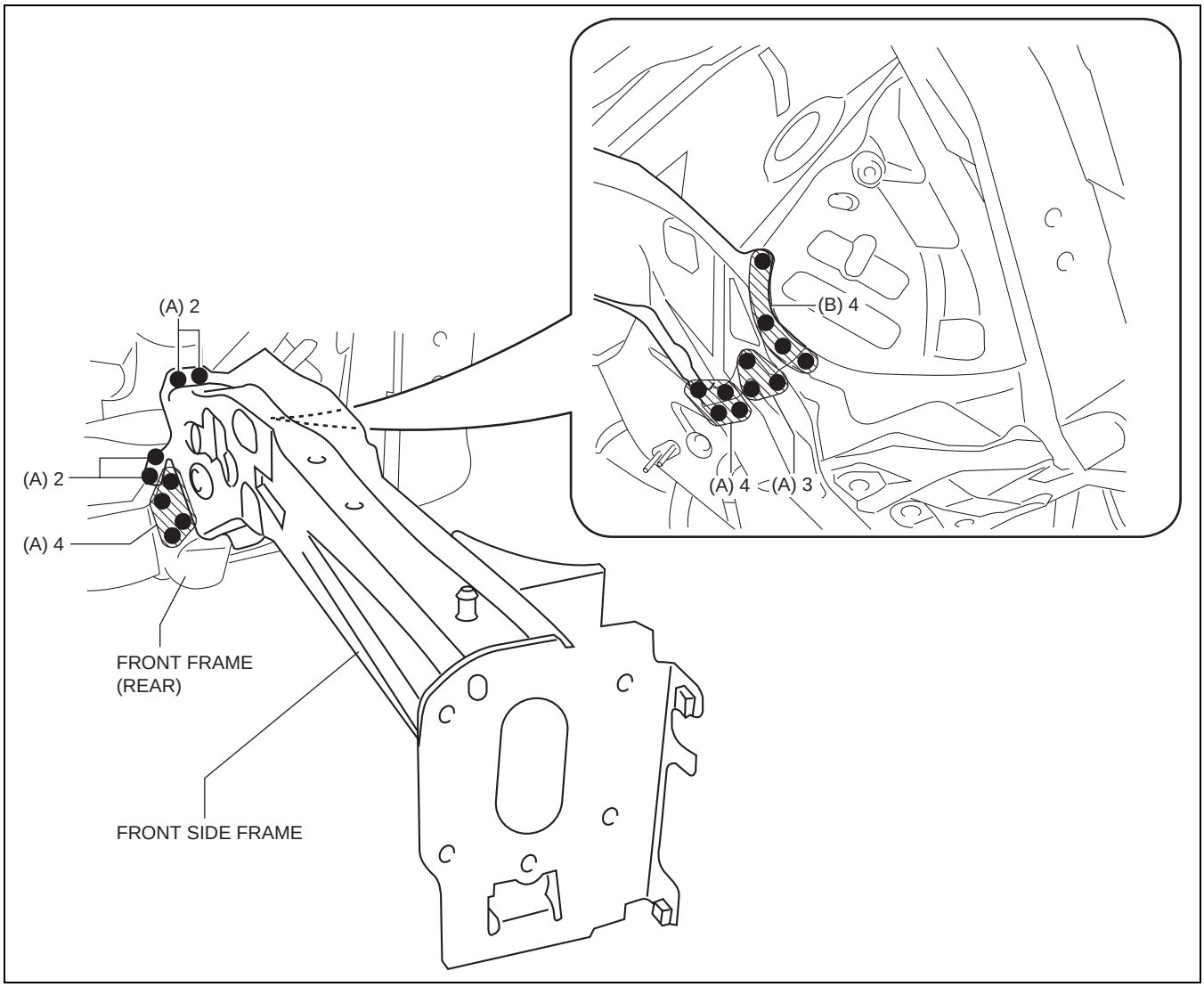

am6zzb0000035

3. Remove the front side frame from the front frame (rear).

cardiagn.com

FRONT SIDE FRAME INSTALLATION [PANEL REPLACEMENT]

id098008606000

Symbol Mark

SYMBOL MARK	MEANING
■	PLUG WELDING (CO_2 ARC WELDING)

am6zzb0000035

Installation Procedure

1. When installing new parts, measure and adjust the body as necessary to conform with standard dimensions.
2. Drill holes for the plug welding before installing the new parts.
3. After temporarily installing new parts, make sure the related parts fit properly.
4. Plug weld the 8 locations indicated by (A) shown in the figure.
5. Plug weld the 11 locations indicated by (B) shown in the figure them install the front side frame.

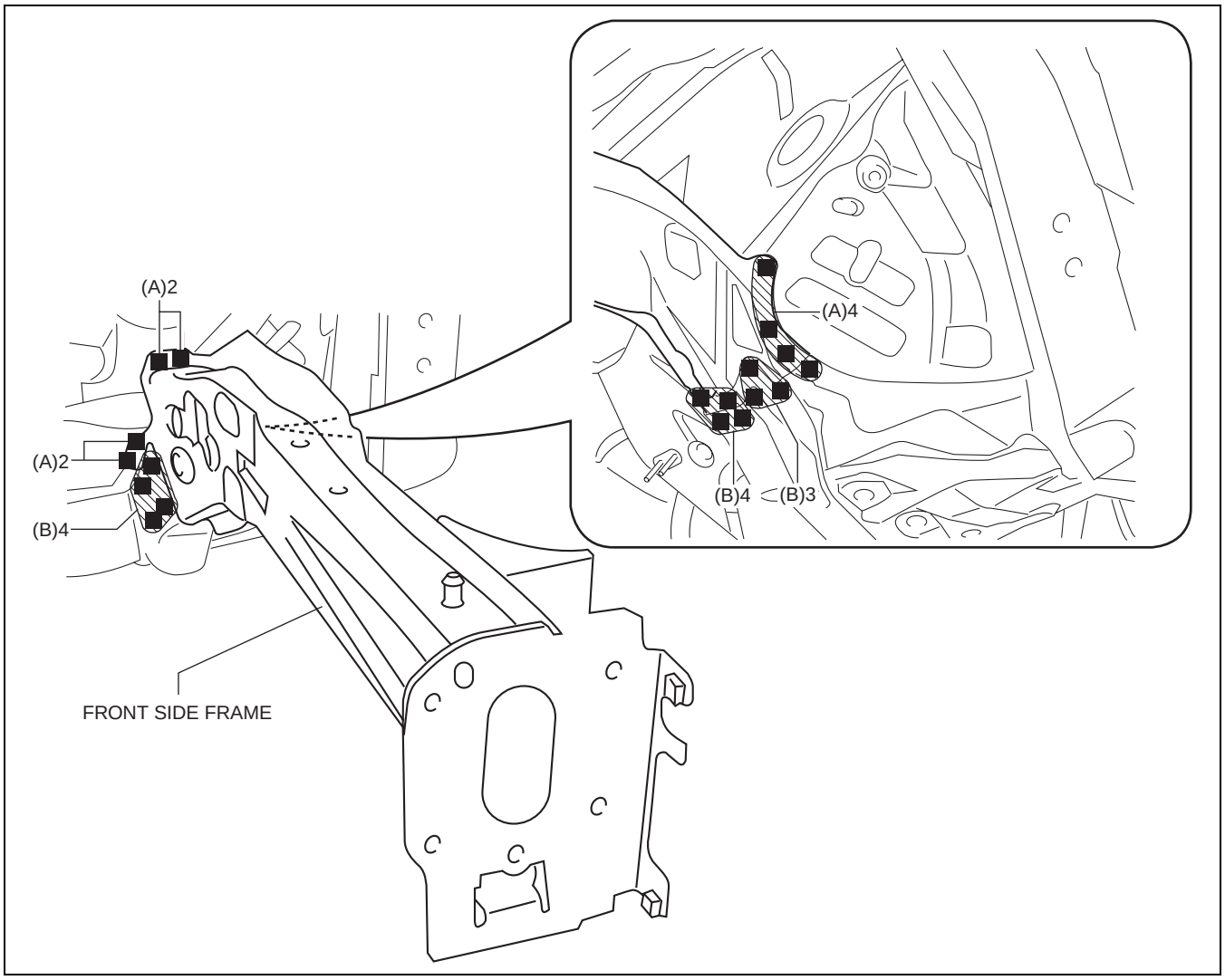

am6zzb0000035

cardiagn.com

FRONT SIDE FRAME (PARTIAL CUTTING) REMOVAL [PANEL REPLACEMENT]

id098008742100

Symbol Mark

SYMBOL MARK	MEANING
●	SPOT WELDING
⁄⁄⁄⁄⁄⁄⁄⁄⁄⁄⁄⁄⁄⁄⁄⁄⁄⁄⁄⁄	ROUGH CUT LOCATION
+	ARC WELDING (SPOT WELDING)

am6zzb0000035

Removal Procedure

1. Drill the 7 locations indicated by (A) shown in the figure.

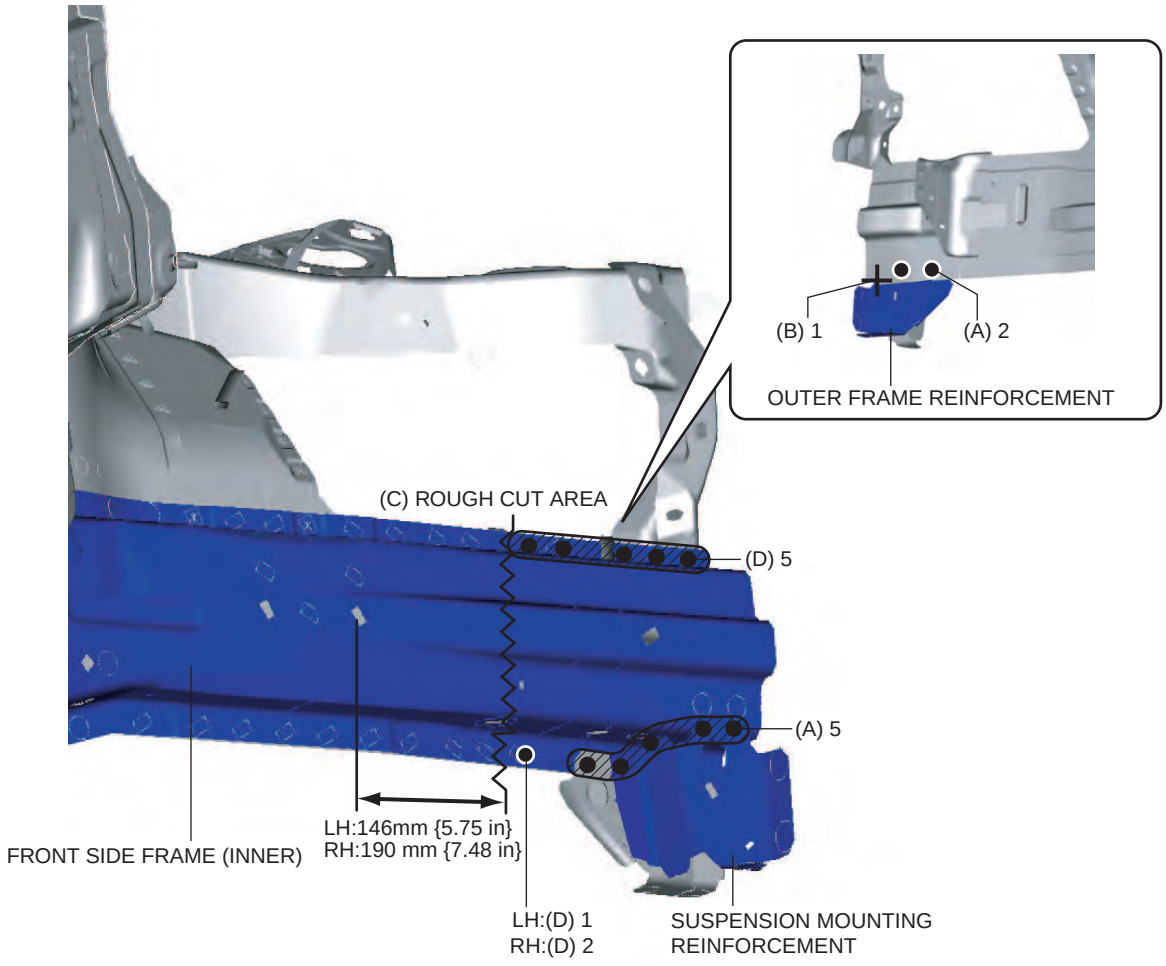

am6zzb0000035

2. Grind the 1 location indicated by (B) shown in the figure, then remove the suspension mounting reinforcement and outer frame reinforcement.
3. Rough cut the location indicated by (C) shown in the figure.
4. Drill the 6 locations (LH), 7 locations (RH) indicated by (D) shown in the figure, then remove the front side frame (inner).
5. Rough cut the location indicated by (E) shown in the figure.

cardiagn.com

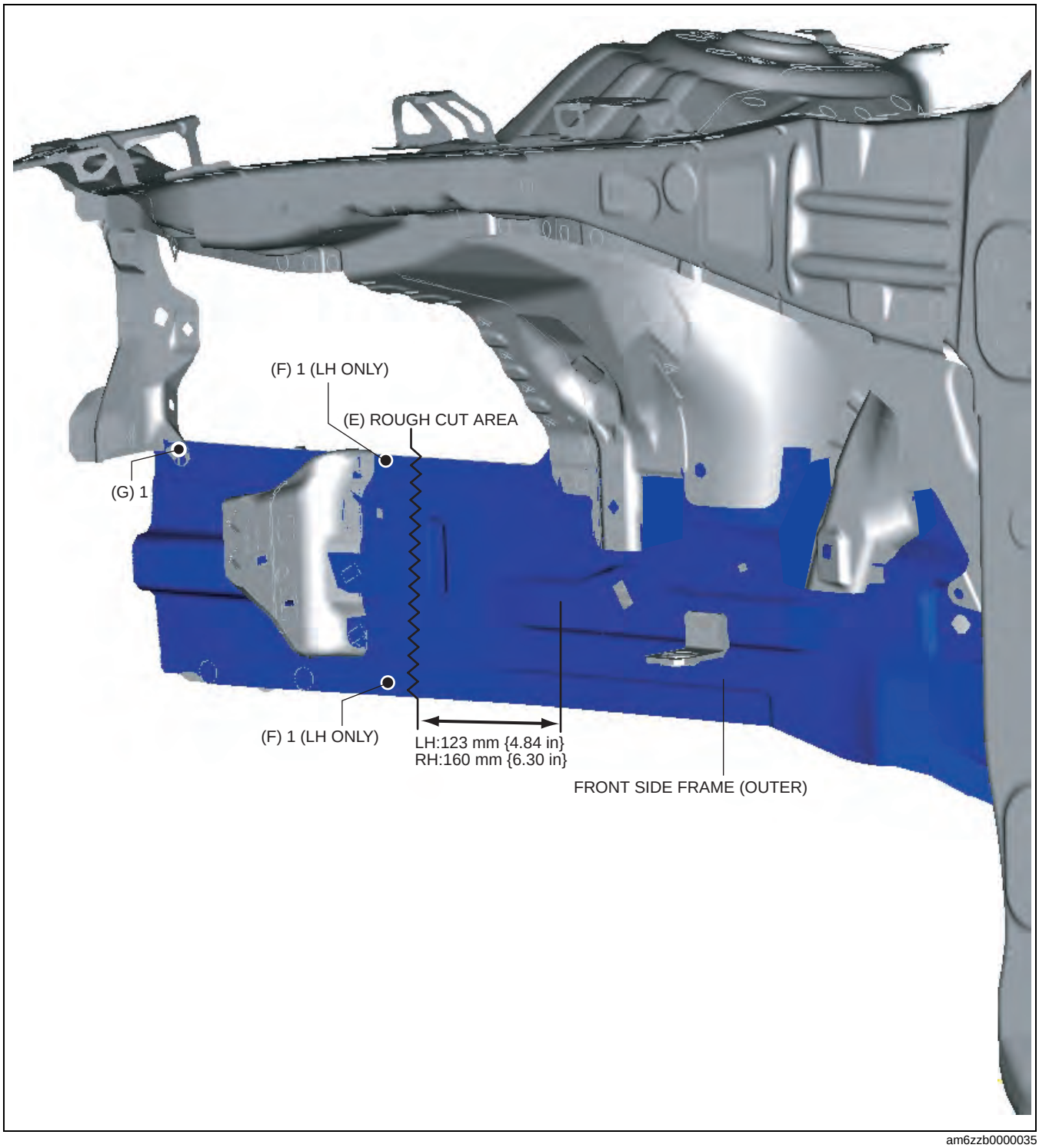

am6zzb0000035

6. Drill the 2 locations indicated by (F) shown in the figure. (LH only)
7. Drill the 1 location indicated by (G) shown in the figure, then remove the front side frame (outer).

cardiagn.com

FRONT SIDE FRAME (PARTIAL CUTTING) INSTALLATION [PANEL REPLACEMENT]

id098008742200

Symbol Mark

SYMBOL MARK	MEANING
	PLUG WELDING (CO_2 ARC WELDING)
	ROUGH CUT LOCATION
	CONTINUOUS CO_2 ARC WELDING (CUT-AND-JOIN LOCATION)
	ARC WELDING (SPOT WELDING)

am6zzb0000035

Installation Procedure

Caution

- **The cut and joint area indicates the maximum size range of the installation position.**

1. When installing new parts, measure and adjust the body as necessary to conform with standard dimensions.
2. Drill holes for the plug welding before installing the new parts.
3. Cut and join location indicated by (A) shown in the figure.

cardiagn.com

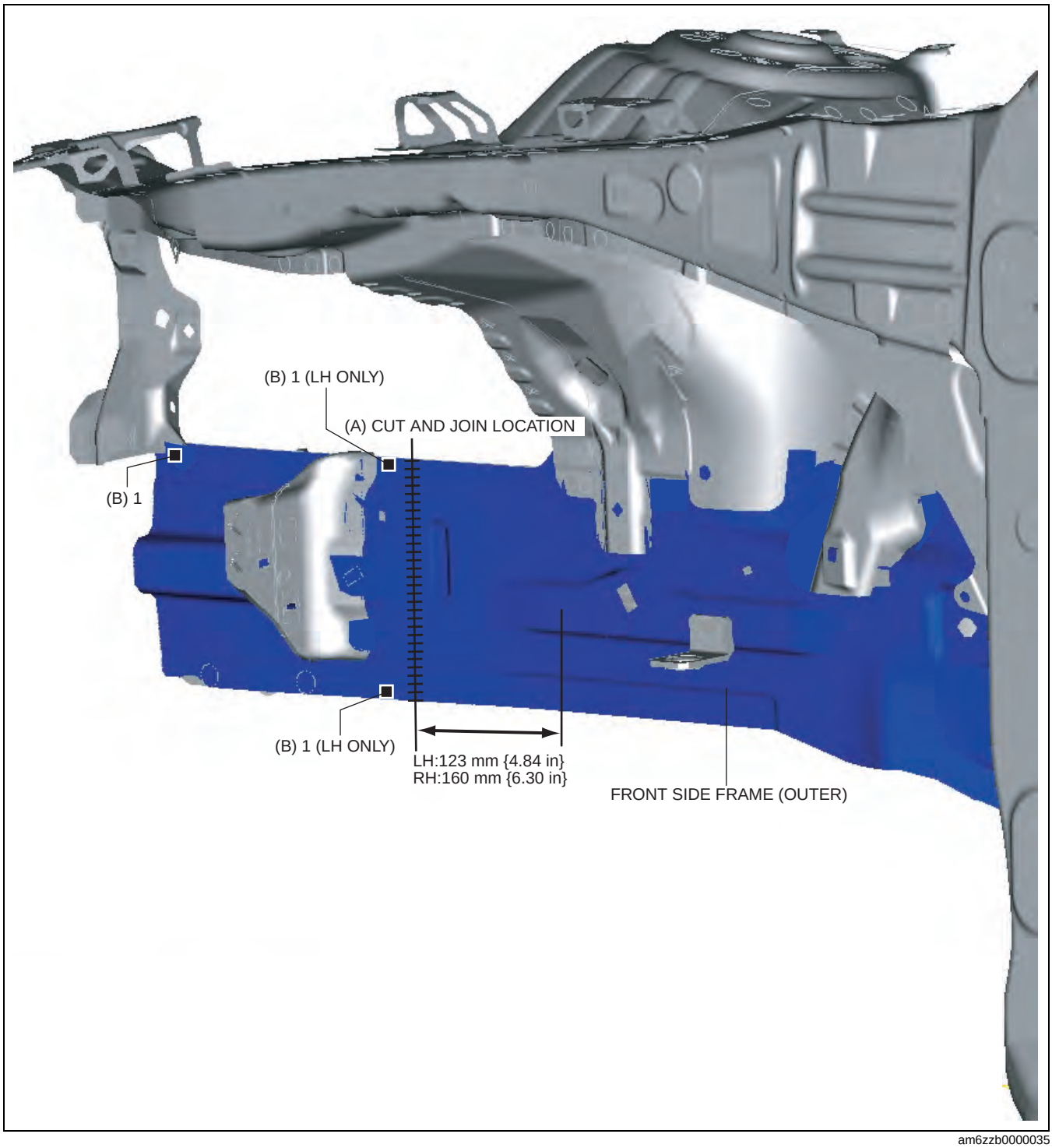

am6zzb0000035

4. Plug weld the 3 locations (LH), 1 location (RH) indicated by (B) shown in the figure, then install the front side frame (outer).
5. To cut and join the new and existing parts, rough cut the new part at the specified location shown in the figure, and chamfer the joint surfaces of the new and existing parts.

cardiagn.com

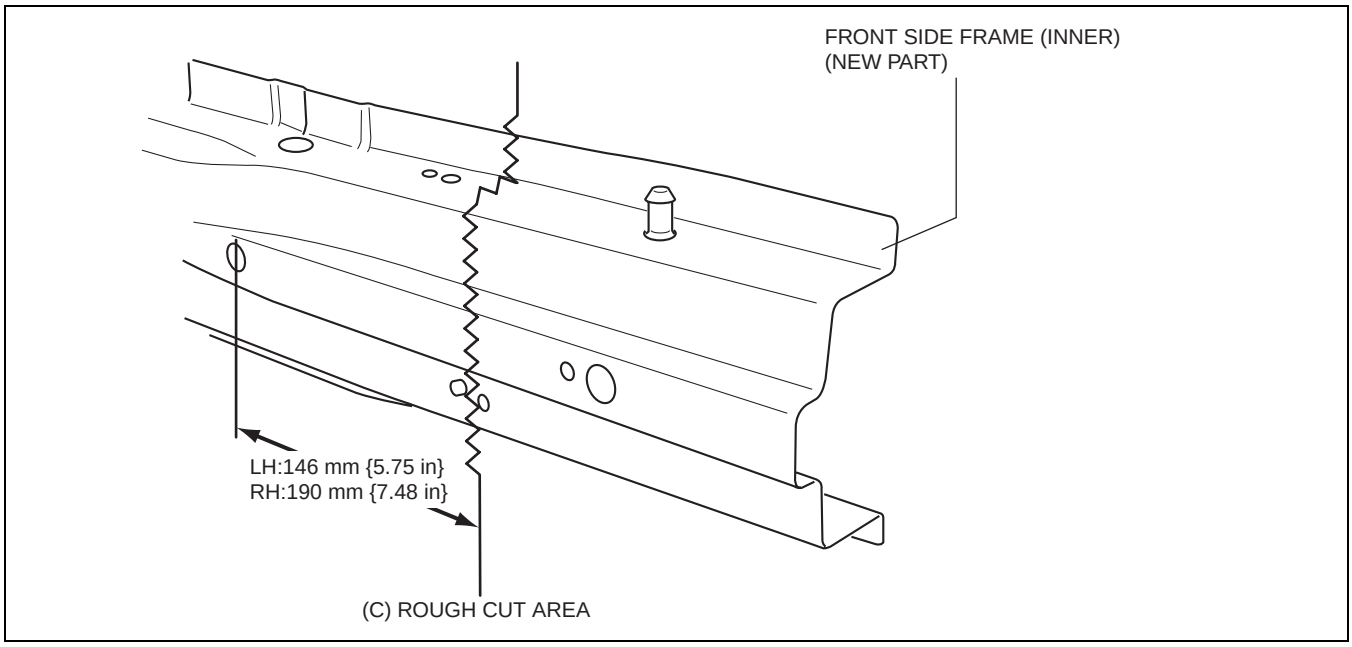

am6zzb0000035

6. Make a reinforcement panel using the material from the front side frame (inner).
7. Plug weld the 4 locations (LH), 6 locations (RH) indicated by (D) shown in the figure, then install the reinforcement to the new front side frame (inner).

cardiagn.com

LH

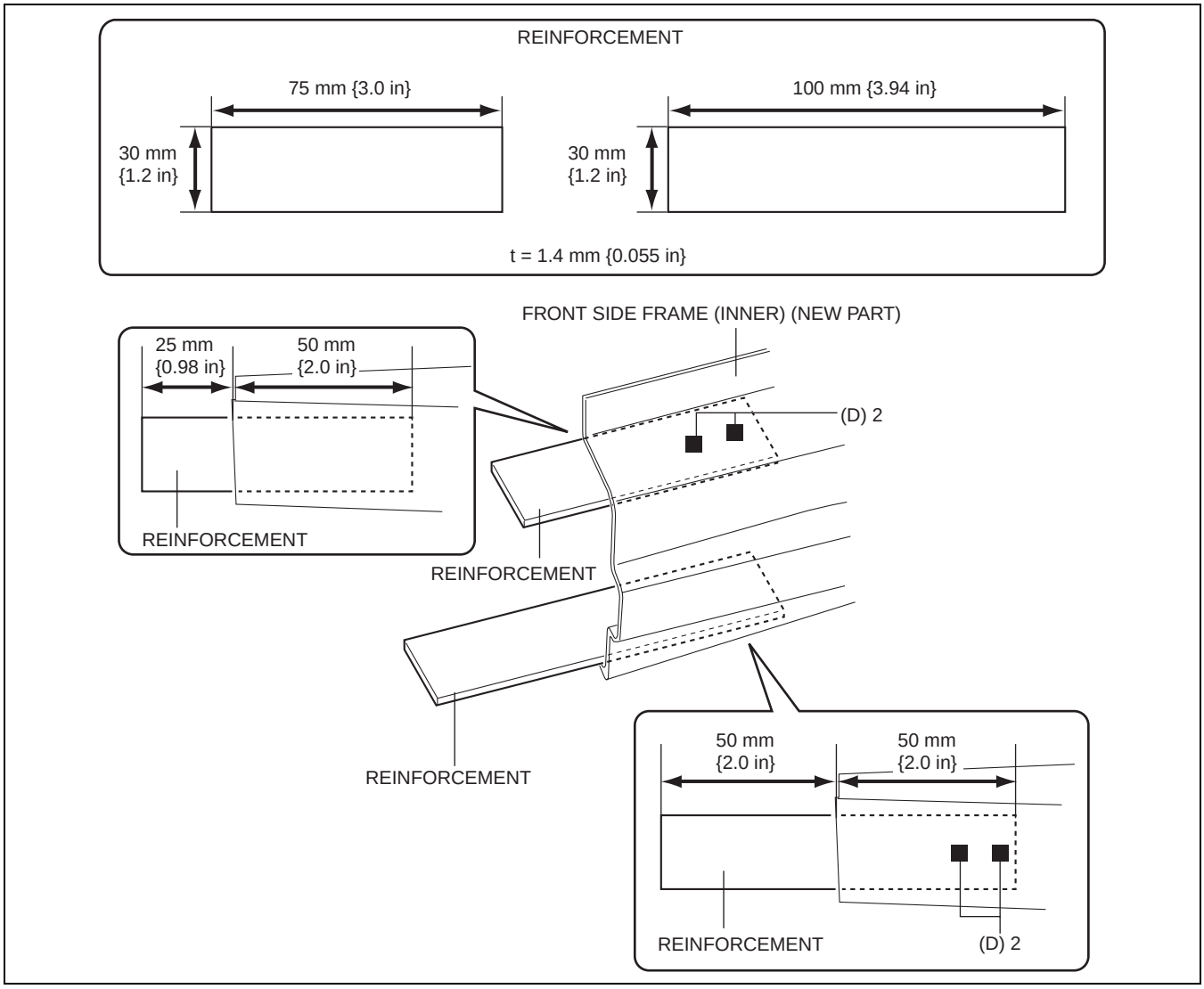

am6zzb0000051

cardiagn.com

RH

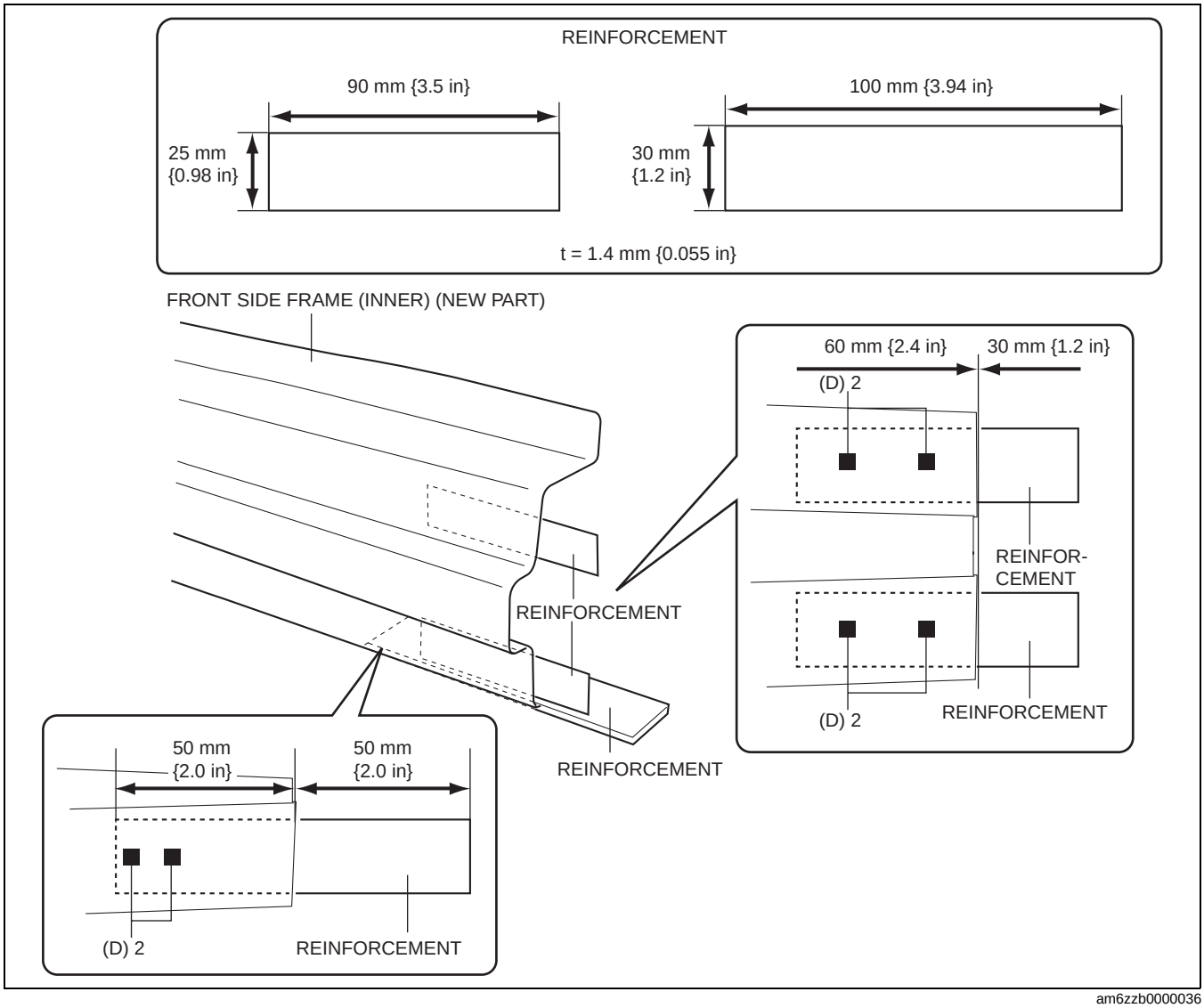

am6zzb0000036

8. Plug weld 3 locations (LH), 2 locations (RH) indicated by (E) shown in the figure.

Note

- Press fit the reinforcement panel and the body side material, and then weld them.

cardiagn.com

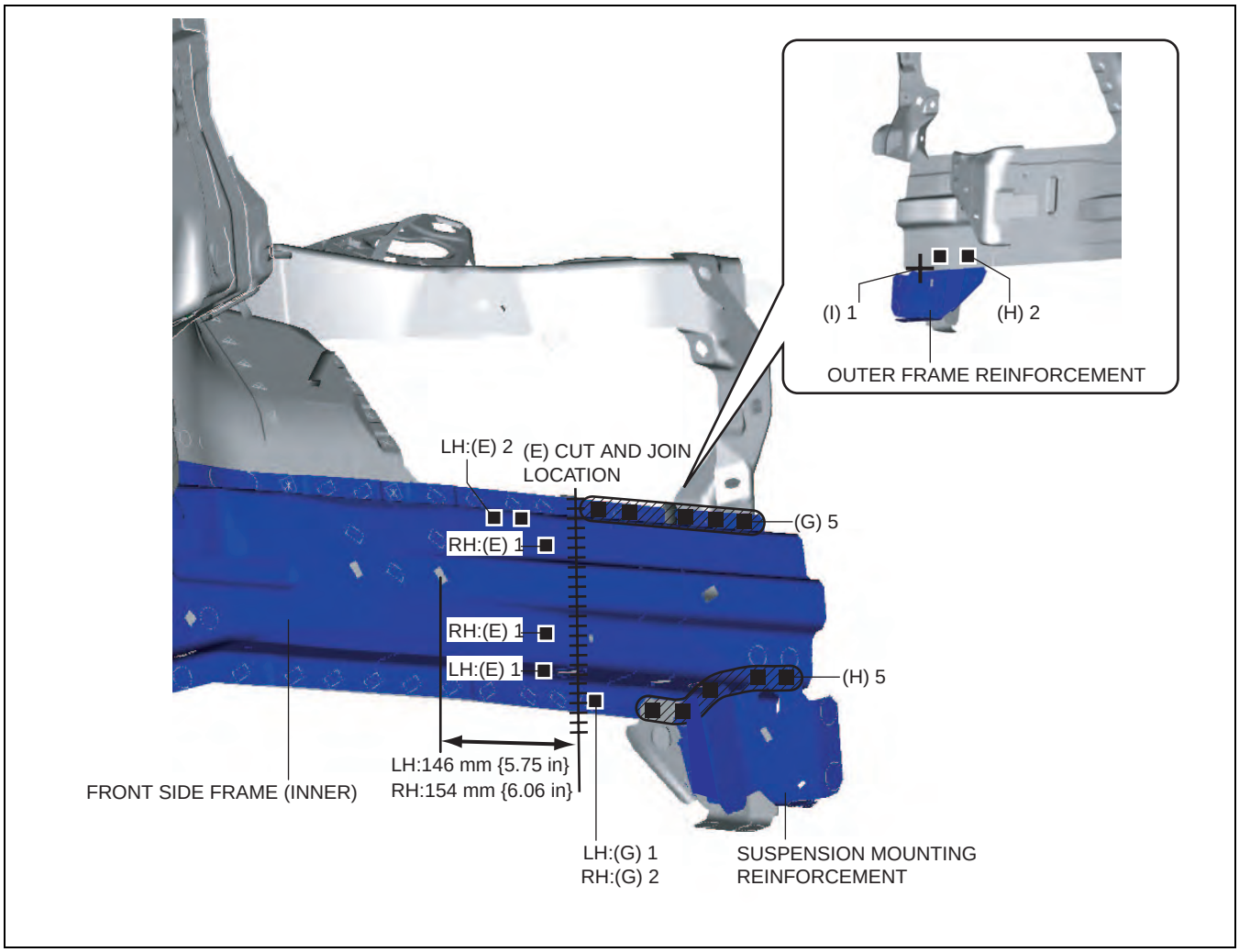

am6zzb0000036

9. Cut and join location indicated by (F) shown in the figure.
10. Plug weld the 6 locations (LH), 7 locations (RH) indicated by (G) shown in the figure, then install the front side frame (inner).
11. Plug weld the 7 locations indicated by (H) shown in the figure.
12. Plug weld the 1 location indicated by (I) shown in the figure, then install the suspension mounting reinforcement and outer frame reinforcement.

cardiagn.com

COWL UPPER PLATE REMOVAL [PANEL REPLACEMENT]

id098008957100

Symbol Mark

SYMBOL MARK	MEANING
●	SPOT WELDING

am6zzb0000036

Removal Procedure

1. Drill the 9 locations indicated by (A) shown in the figure.

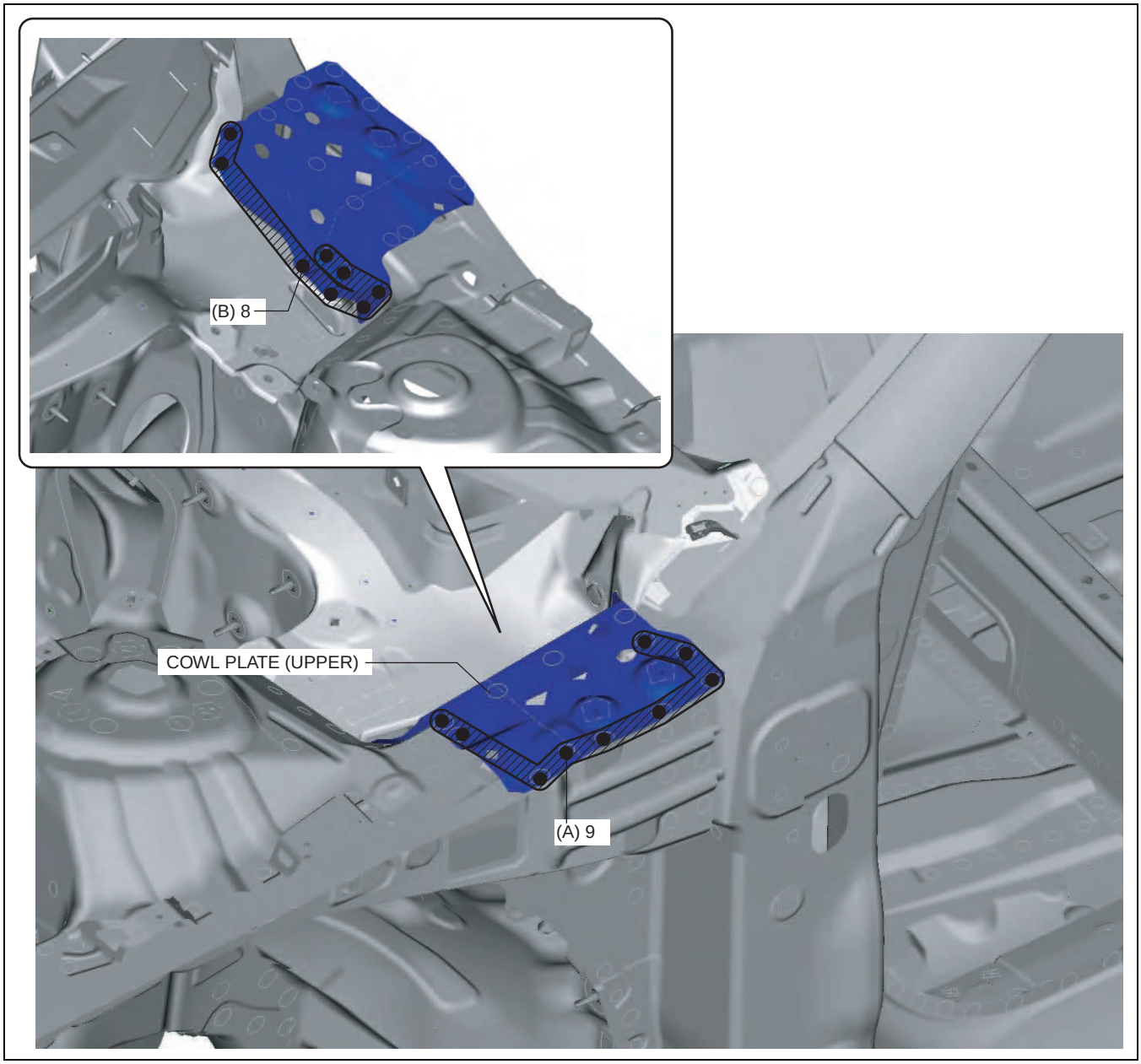

am6zzb0000036

2. Drill the 8 locations indicated by (B) shown in the figure, then remove the cowl plate (upper).

cardiagn.com

COWL UPPER PLATE INSTALLATION [PANEL REPLACEMENT]

id098008957200

Symbol Mark

SYMBOL MARK	MEANING
■	PLUG WELDING (CO_2 ARC WELDING)

am6zzb0000036

Installation Procedure

1. When installing new parts, measure and adjust the body as necessary to conform with standard dimensions.
2. Drill holes for the plug welding before installing the new parts.
3. After temporarily installing new parts, make sure the related parts fit properly.
4. Plug weld the 8 locations indicated by (A) shown in the figure.

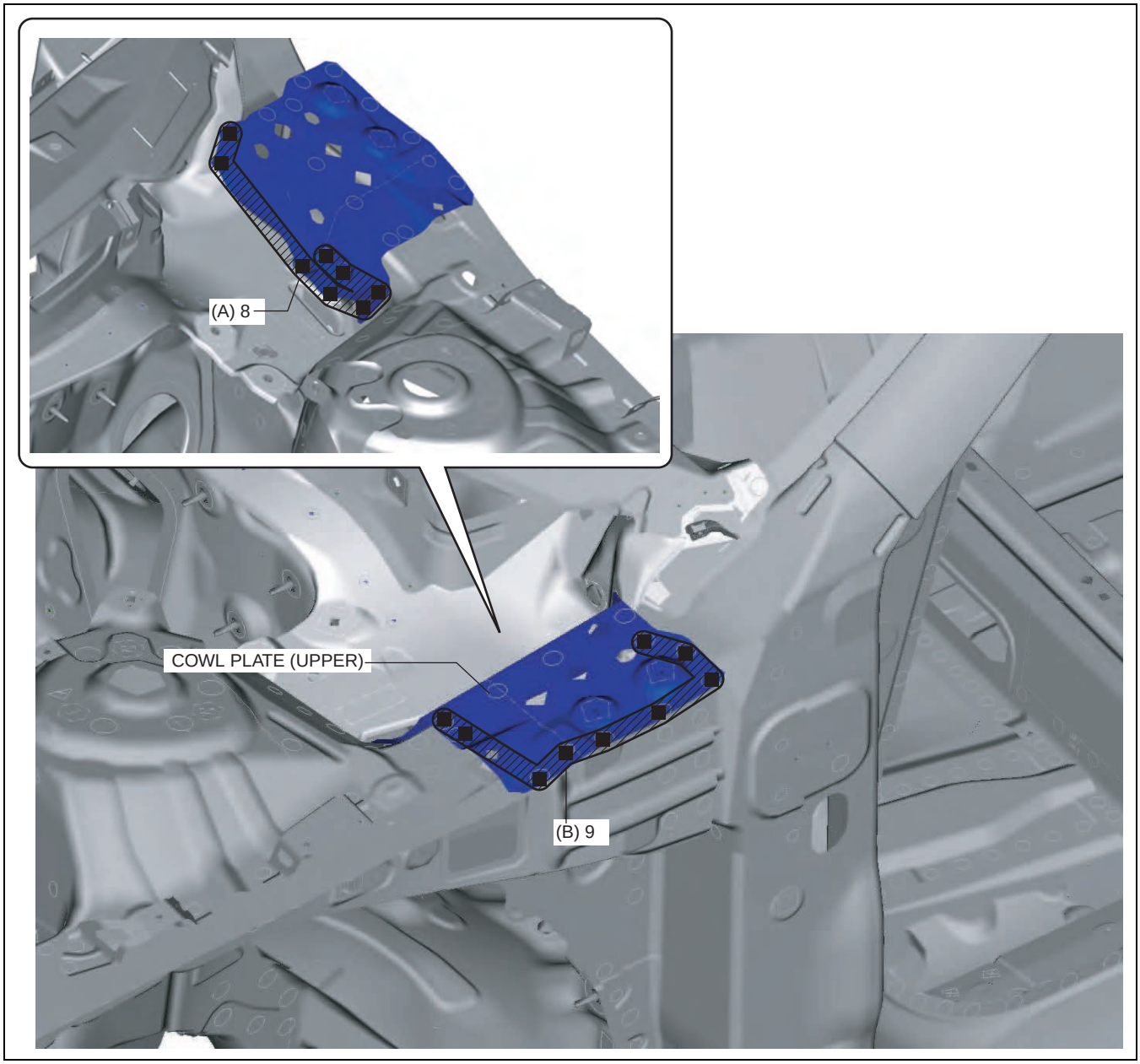

am6zzb0000036

5. Plug weld the 8 locations indicated by (B) shown in the figure, then install the cowl plate (upper).

cardiagn.com

TORQUE BOX REMOVAL [PANEL REPLACEMENT]

id098008607100

Symbol Mark

SYMBOL MARK	MEANING
●	SPOT WELDING

am6zzb0000036

Removal Procedure

1. Drill the 23 locations (LH), 28 locations (RH) indicated by (A) shown in the figure.

Note

- When drilling the 23 locations (LH), 28 locations (RH) indicated by (A) shown in the figure, do not drill a hole all the way through or there could be a problem when installing the new part.

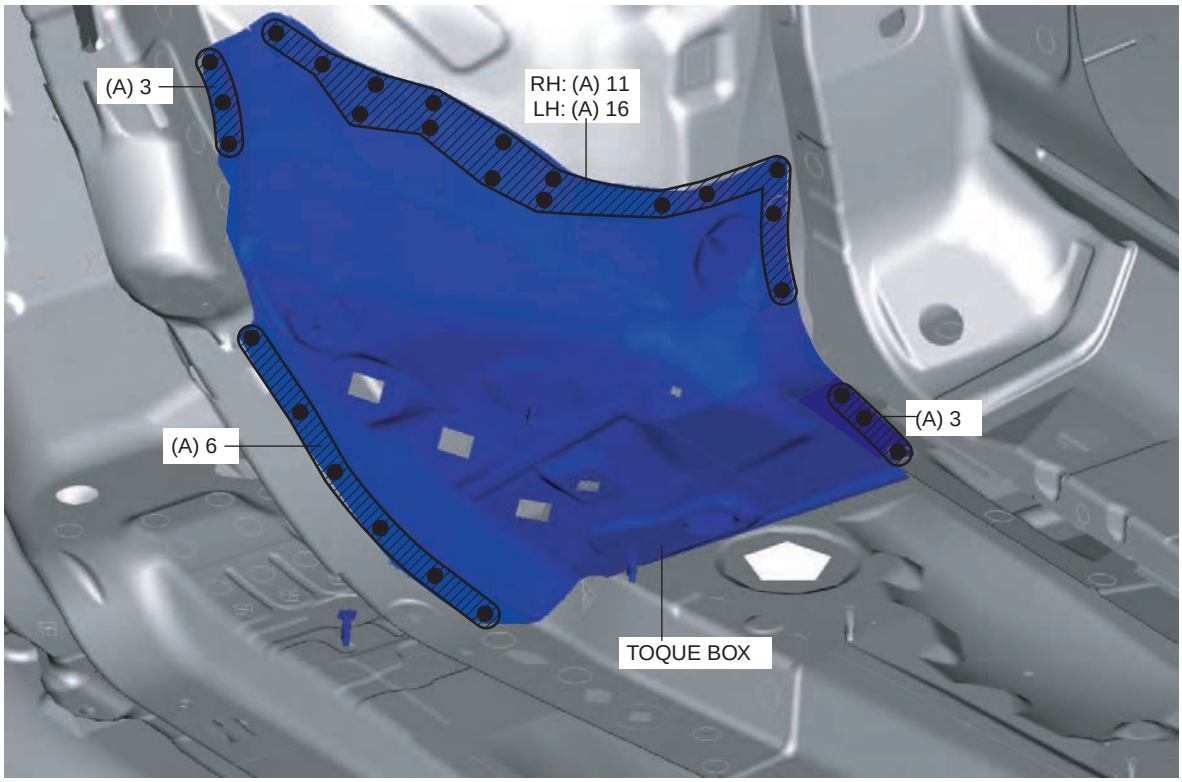

am6zzb0000036

2. Drill the 7 locations indicated by (B) from the inside shown in the figure.

cardiagn.com

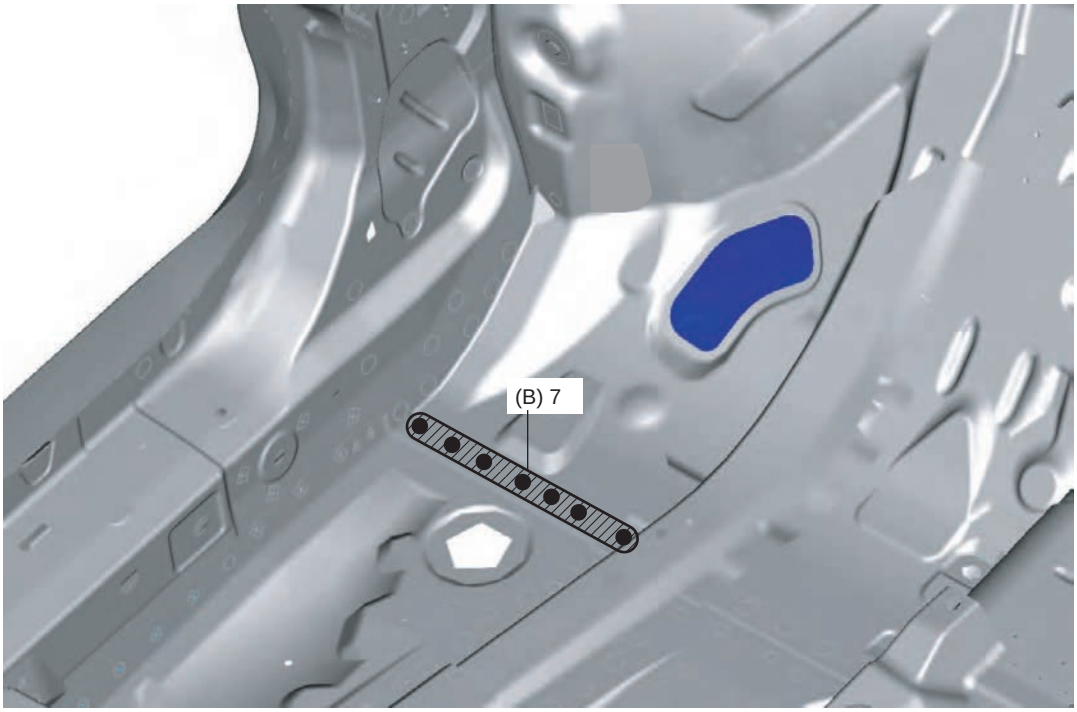

aatjjb00000198

3. Remove the torque box.

cardiagn.com

TORQUE BOX INSTALLATION [PANEL REPLACEMENT]

id098008607200

Symbol Mark

SYMBOL MARK	MEANING
■	PLUG WELDING (CO_2 ARC WELDING)

am6zzb0000036

Installation Procedure

1. When installing new parts, measure and adjust the body as necessary to conform with standard dimensions.
2. Drill holes 23 locations (LH), 28 locations (RH) indicated by (B) shown in the figure for the plug welding before installing the new parts.
3. After temporarily installing new parts, make sure the related parts fit properly.
4. Plug weld the 7 locations indicated by (A) from the room side shown in the figure.

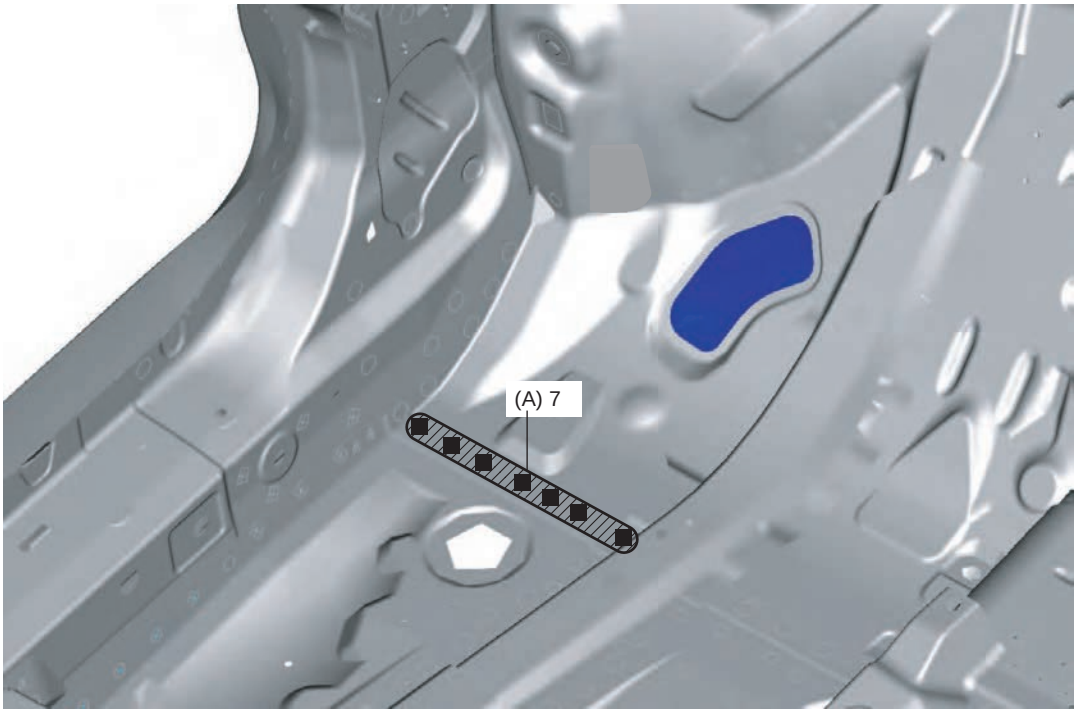

am6zzb0000036

5. Plug weld the 23 locations (LH), 28 locations (RH) by (B) shown in the figure, then install the toque box.

cardiagn.com

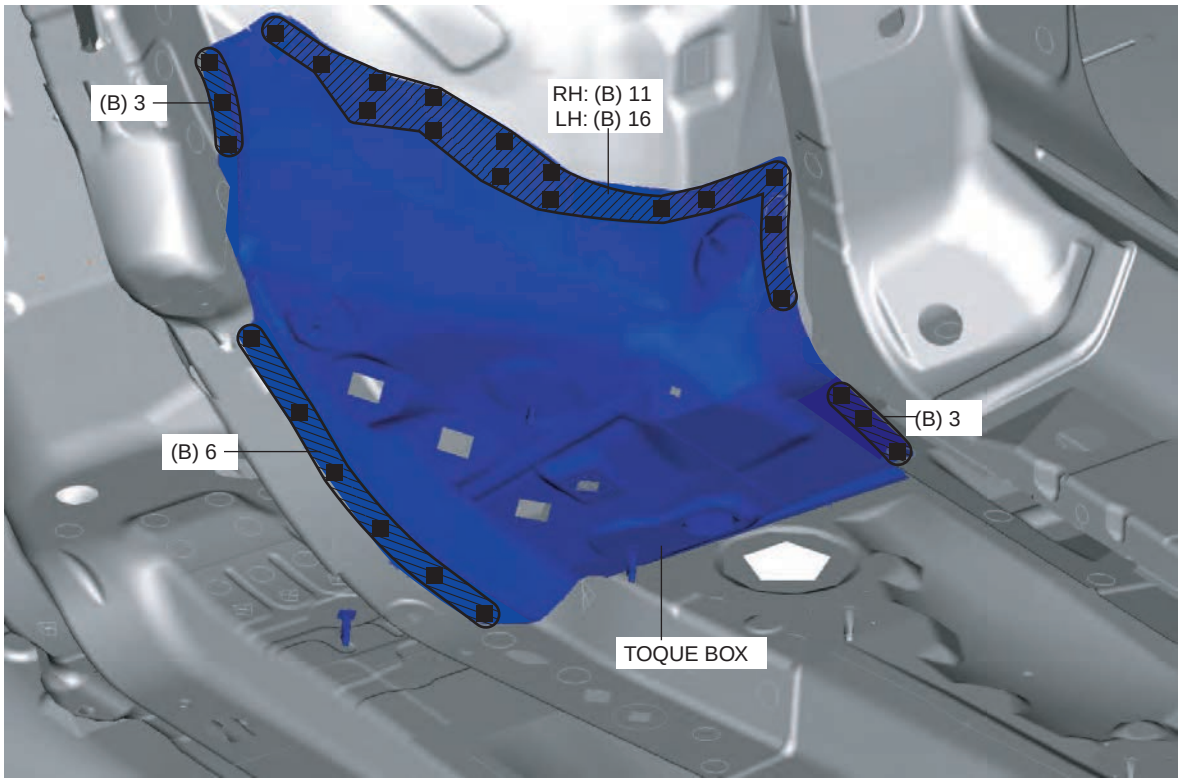

am6zzb0000037

cardiagn.com

SIDE MEMBER REMOVAL [PANEL REPLACEMENT]

id098008928100

Symbol Mark

SYMBOL MARK	MEANING
●	SPOT WELDING

am6zzb0000037

Removal Procedure

1. Drill the 45 locations (driver-side), 44 locations (passenger-side) shown in the figure.

Note

- When drilling the 45 locations (driver-side), 44 locations (passenger-side) shown in the figure, do not drill a hole all the way through or there could be a problem when installing the new part.

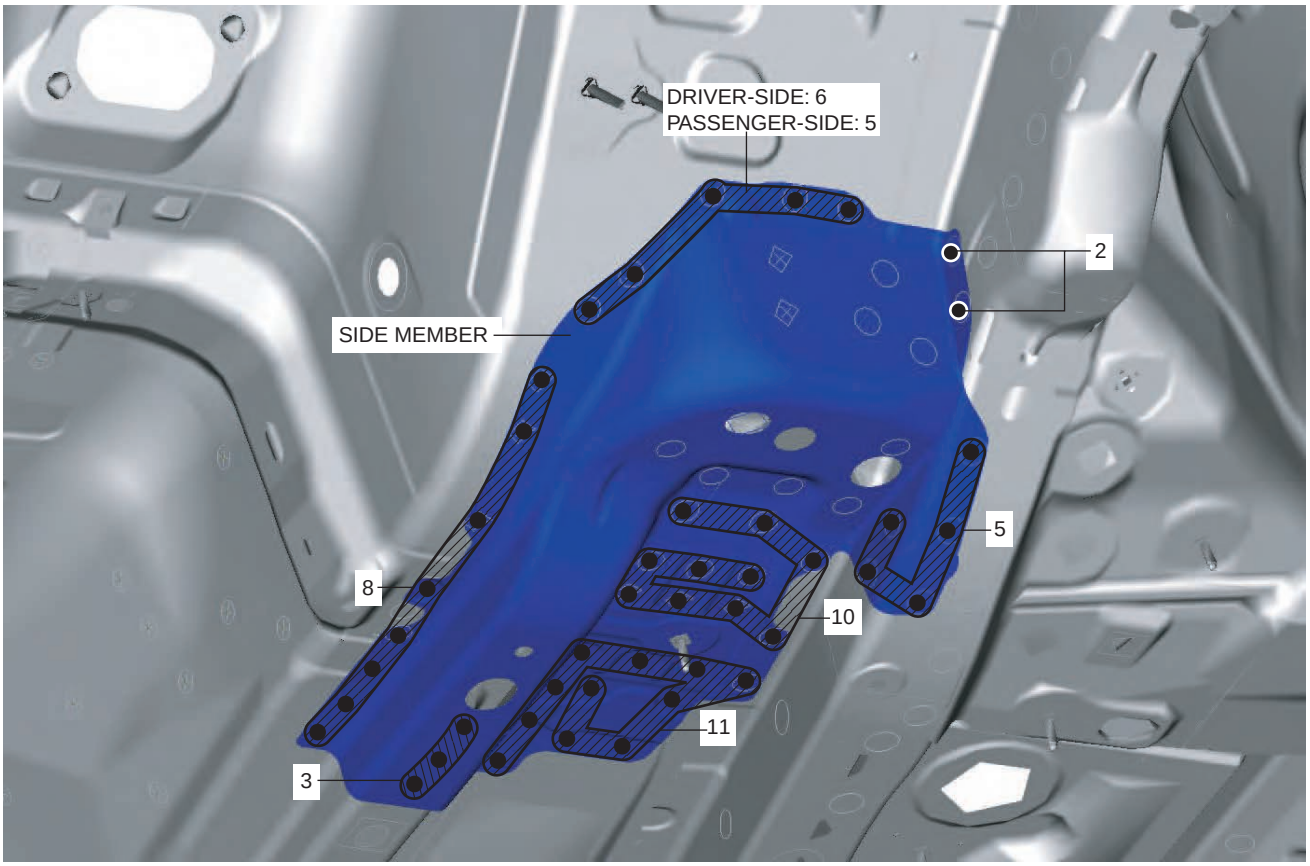

am6zzb0000037

2. Remove the side member.

cardiagn.com

SIDE MEMBER INSTALLATION [PANEL REPLACEMENT]

id098008928200

Symbol Mark

SYMBOL MARK	MEANING
■	PLUG WELDING (CO_2 ARC WELDING)

am6zzb0000037

Installation Procedure

1. When installing new parts, measure and adjust the body as necessary to conform with standard dimensions.
2. Drill holes for the plug welding before installing the new parts.
3. After temporarily installing new parts, make sure the related parts fit properly.
4. Plug weld the 45 locations (driver-side), 44 locations (passenger-side) shown in the figure, then install the side member.

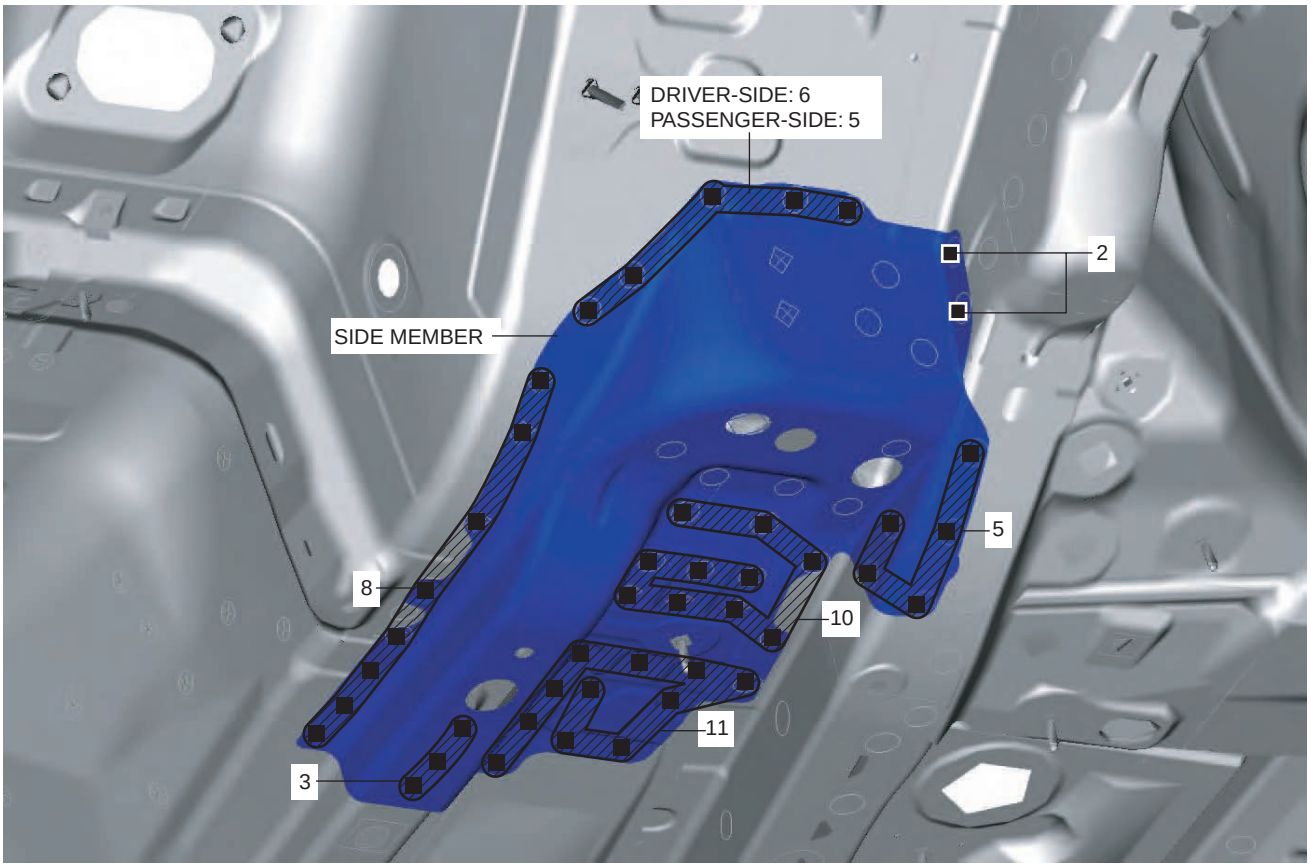

am6zzb0000037

cardiagn.com

FRONT FRAME (REAR) REMOVAL [PANEL REPLACEMENT]

id098008742500

Symbol Mark

SYMBOL MARK	MEANING
●	SPOT WELDING

am6zzb0000037

Removal Procedure

1. Drill the 26 locations shown in the figure.

Note

- When drilling the 26 locations shown in the figure, do not drill a hole all the way through or there could be a problem when installing the new part.

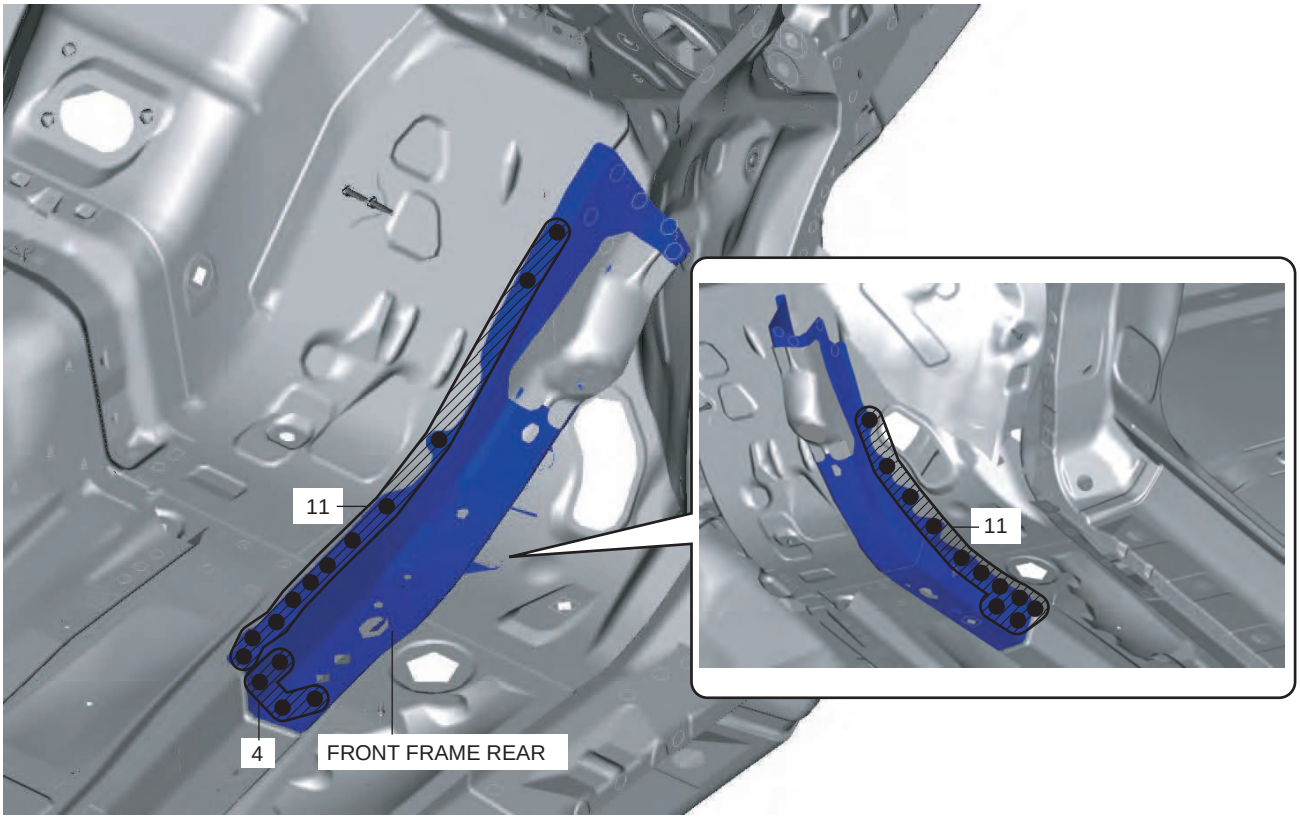

am6zzb0000037

2. Remove the front frame (rear).

cardiagn.com

FRONT FRAME (REAR) INSTALLATION [PANEL REPLACEMENT]

id098008742600

Symbol Mark

SYMBOL MARK	MEANING
■	PLUG WELDING (CO_2 ARC WELDING)

am6zzb0000037

Installation Procedure

1. When installing new parts, measure and adjust the body as necessary to conform with standard dimensions.
2. Drill holes for the plug welding before installing the new parts.
3. After temporarily installing new parts, make sure the related parts fit properly.
4. Plug weld the 26 locations shown in the figure, then install the front frame (rear).

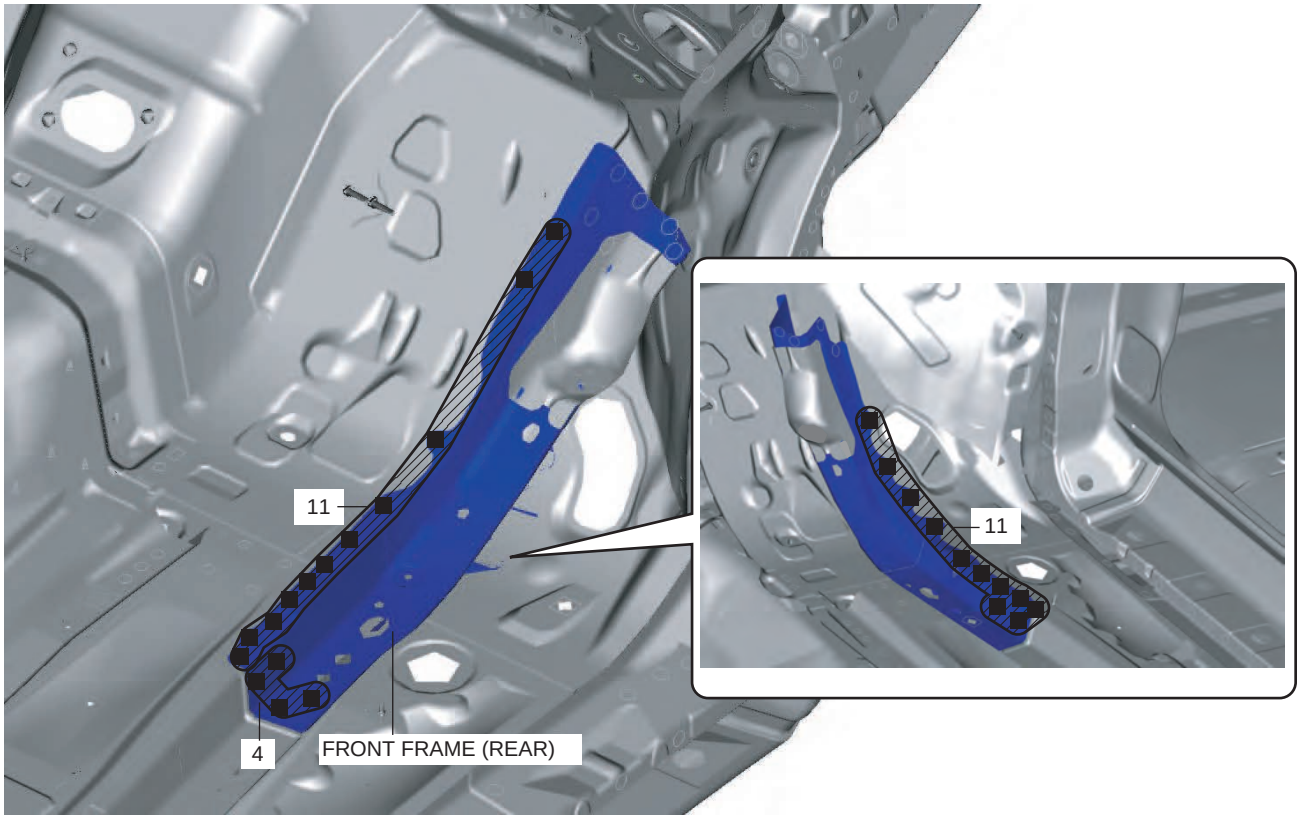

am6zzb0000037

cardiagn.com

FRONT PILLAR REMOVAL [PANEL REPLACEMENT]

id098008744700

Symbol Mark

SYMBOL MARK	MEANING
●	SPOT WELDING
	ROUGH CUT LOCATION

am6zzb0000037

Removal Procedure

Caution
- **Remove the curtain air bag module to prevent damage before servicing.**

Front-side

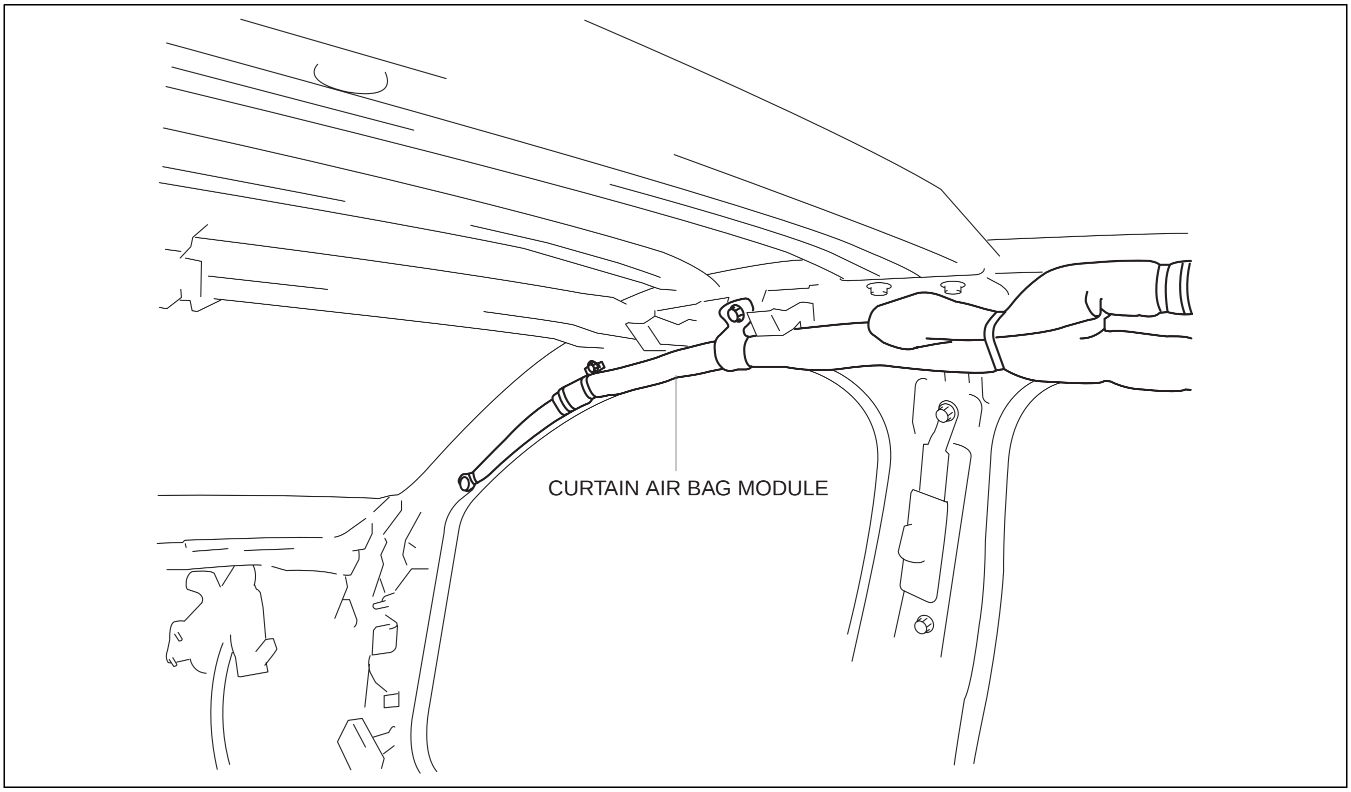

am6xub0000010

cardiagn.com

Rear-side

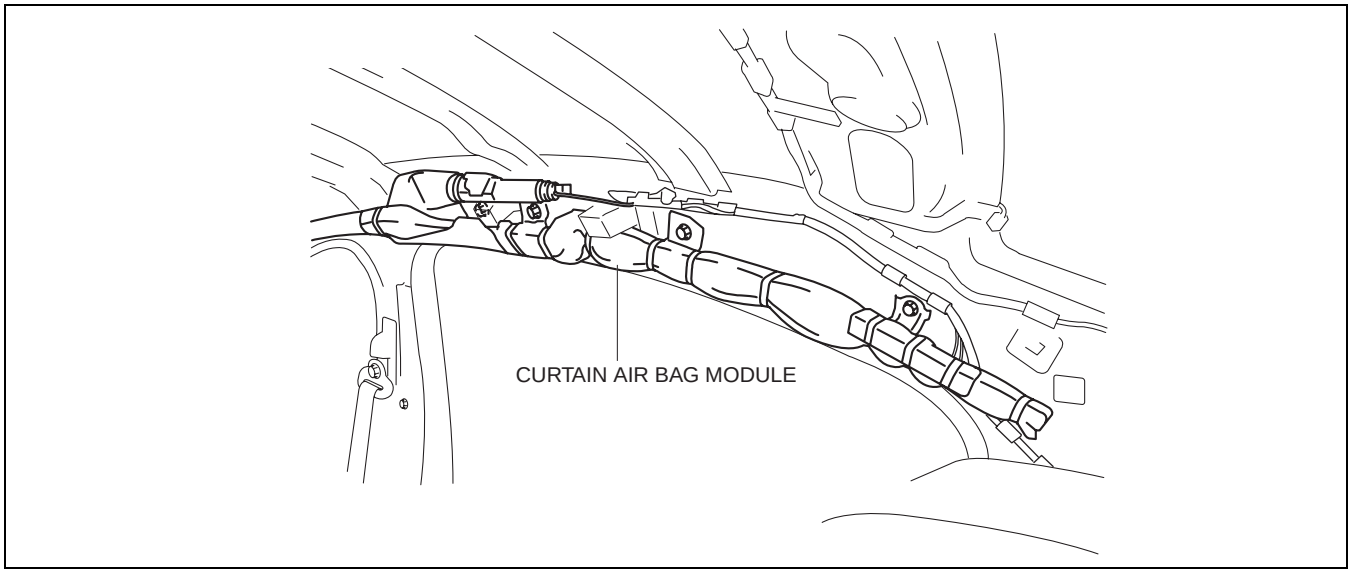

am6xub0000010

Caution

- **Avoid cutting with a blowtorch or similar tools as the insulator (shaded area) is flammable.**

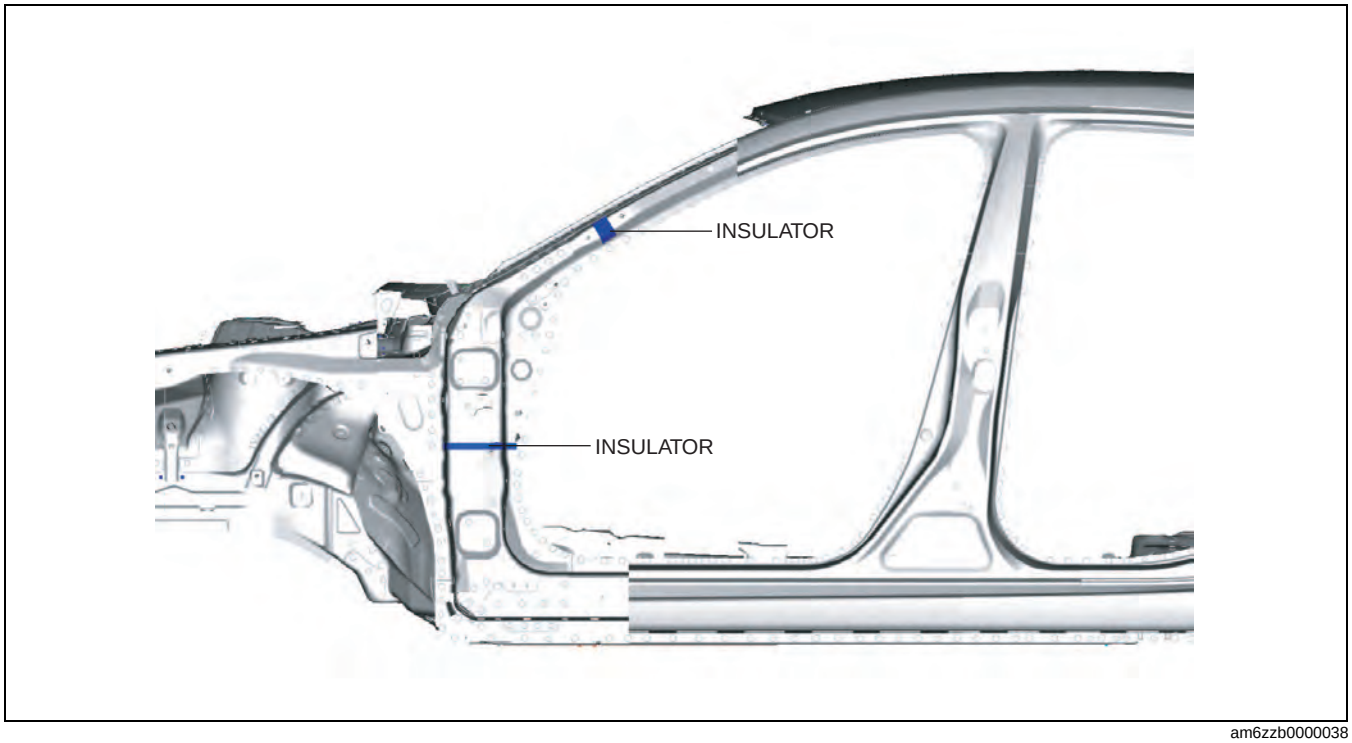

am6zzb0000038

1. Rough cut the 2 locations indicated by (A) shown in the figure.

cardiagn.com

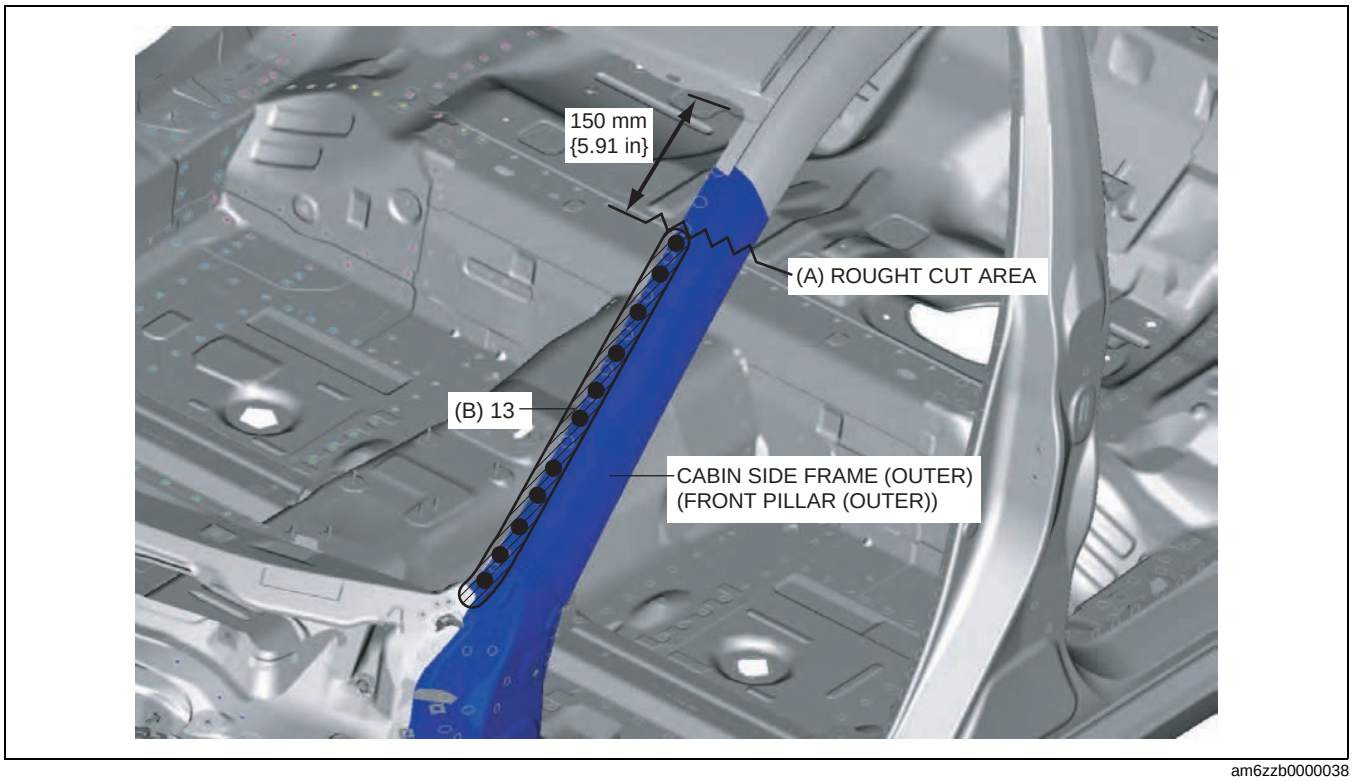

am6zzb0000038

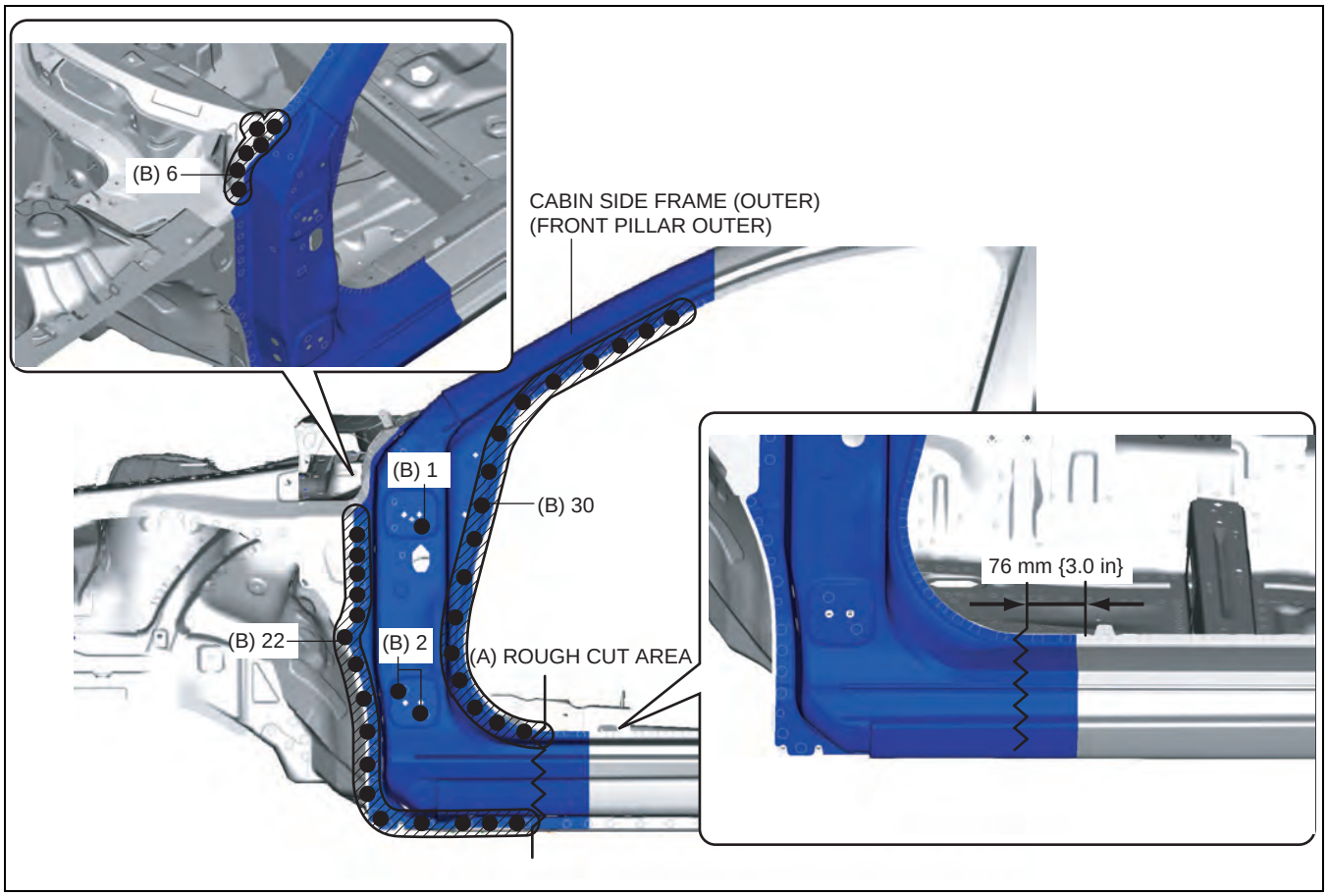

am6zzb0000038

2. Drill the 74 locations indicated by (B) shown in the figure, then remove the cabin side frame (outer) (front pillar (outer)).
3. Rough cut the location (C) shown in the figure.

cardiagn.com

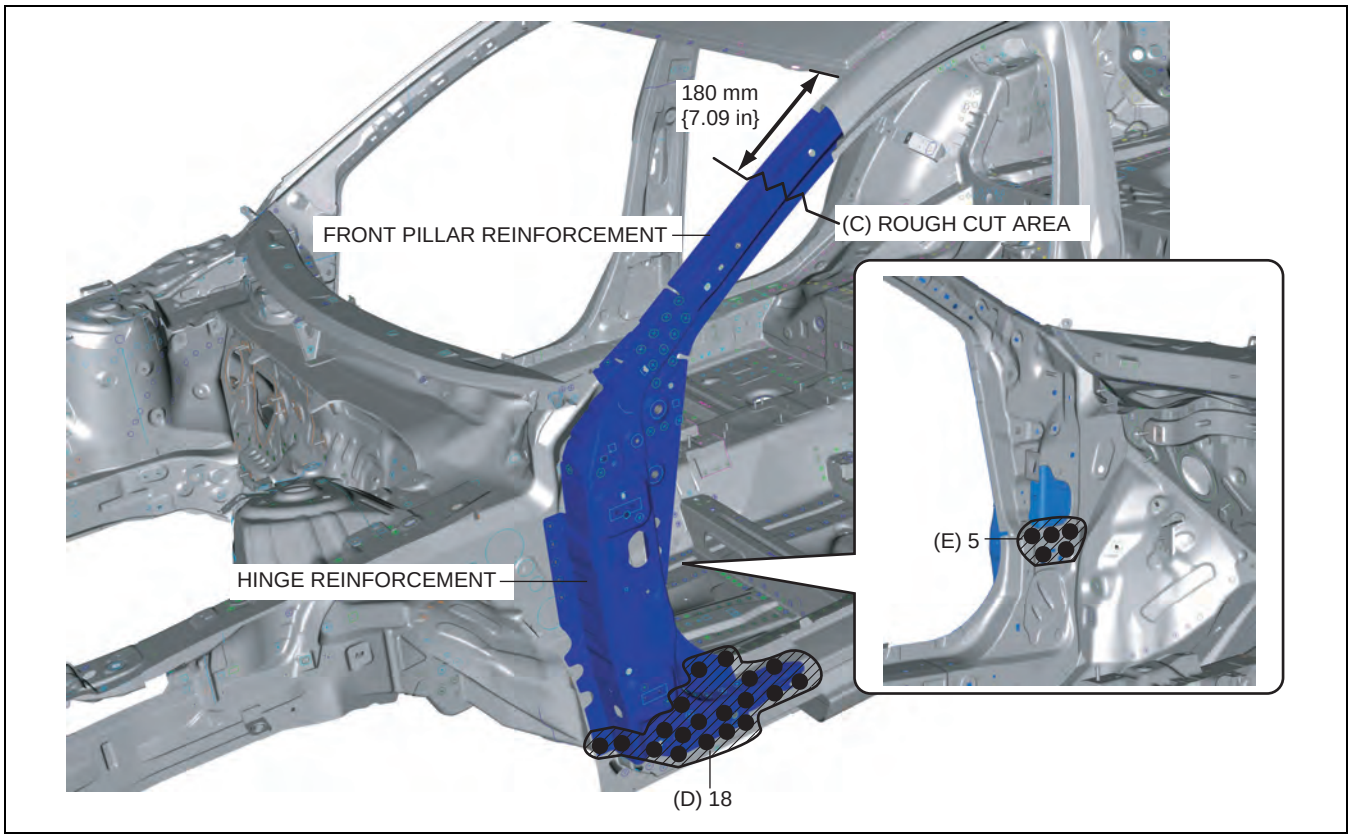

am6zzb0000038

4. Drill the 18 locations indicated by (D) shown in the figure.
5. Drill the 5 locations indicated by (E) from the room side shown in the figure, then front pillar reinforcement and hinge reinforcement as a single unit.
6. Rough cut the location indicated by (F) shown in the figure.

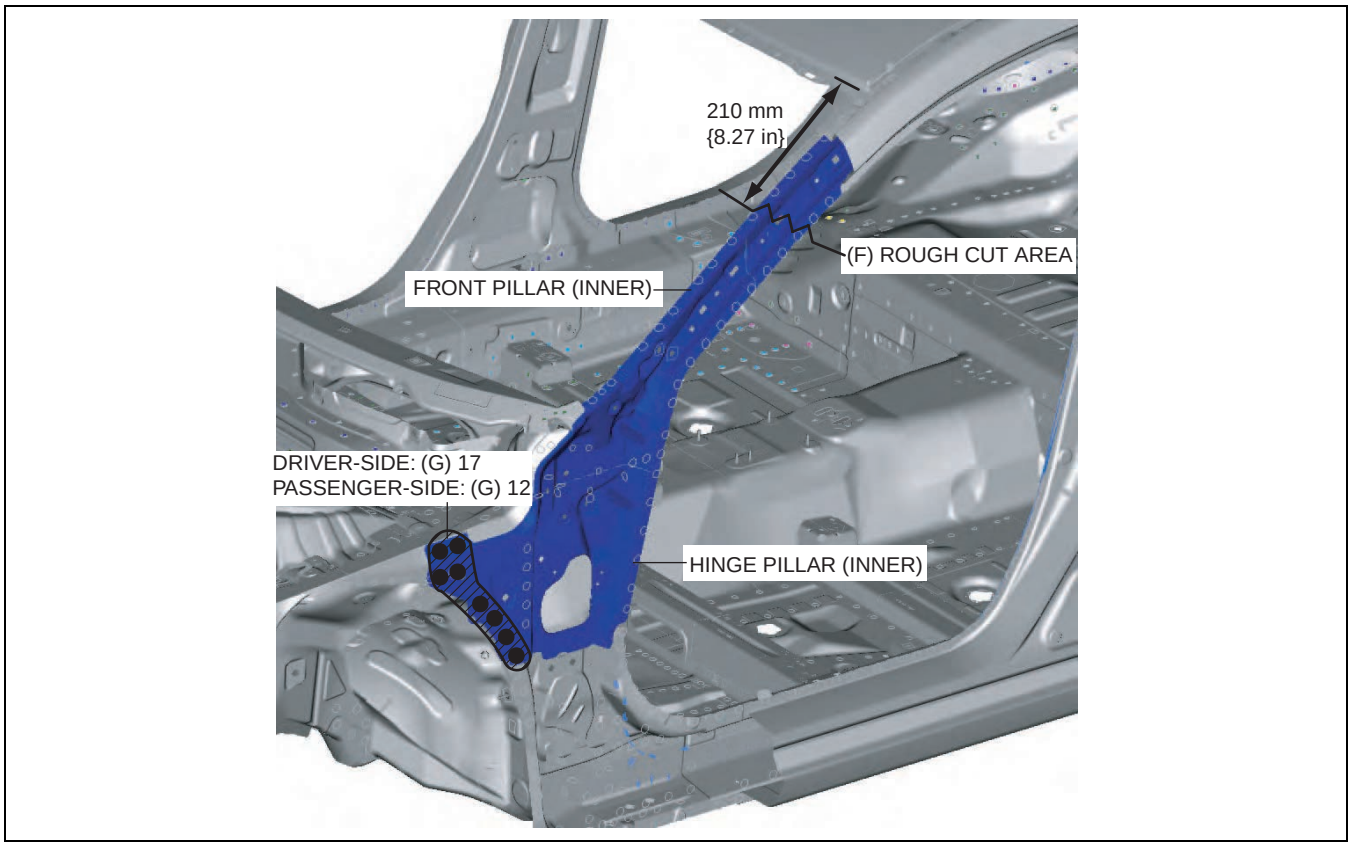

am6zzb0000038

cardiagn.com

7. Drill the 17 locations (driver-side), 12 locations (passenger-side) indicated (G) shown in the figure, then remove the front pillar (inner) and hinge pillar (inner) as a single unit.

FRONT PILLAR INSTALLATION [PANEL REPLACEMENT]

id098008744800

Symbol Mark

SYMBOL MARK	MEANING
■	PLUG WELDING (CO_2 ARC WELDING)
⌇⌇⌇⌇⌇⌇⌇⌇⌇⌇⌇⌇	ROUGH CUT LOCATION
┼┼┼┼┼┼┼┼┼┼┼┼┼┼┼┼┼┼┼┼┼┼┼┼┼┼	CONTINUOUS CO^2 ARC WELDING (CUT-AND-JOIN LOCATION)

am6zzb0000038

Installation Procedure

1. When installing new parts, measure and adjust the body as necessary to conform with standard dimensions.
2. Drill holes for the plug welding before installing the new parts.
3. After temporarily installing new parts, make sure the related parts fit properly.
4. Cut and join location the indicated by (A) shown in the figure, then install the front pillar (inner).
5. Plug weld the 21 locations (LH), 16 locations (RH) indicated by (B) shown in the figure, then install the hinge pillar (inner).

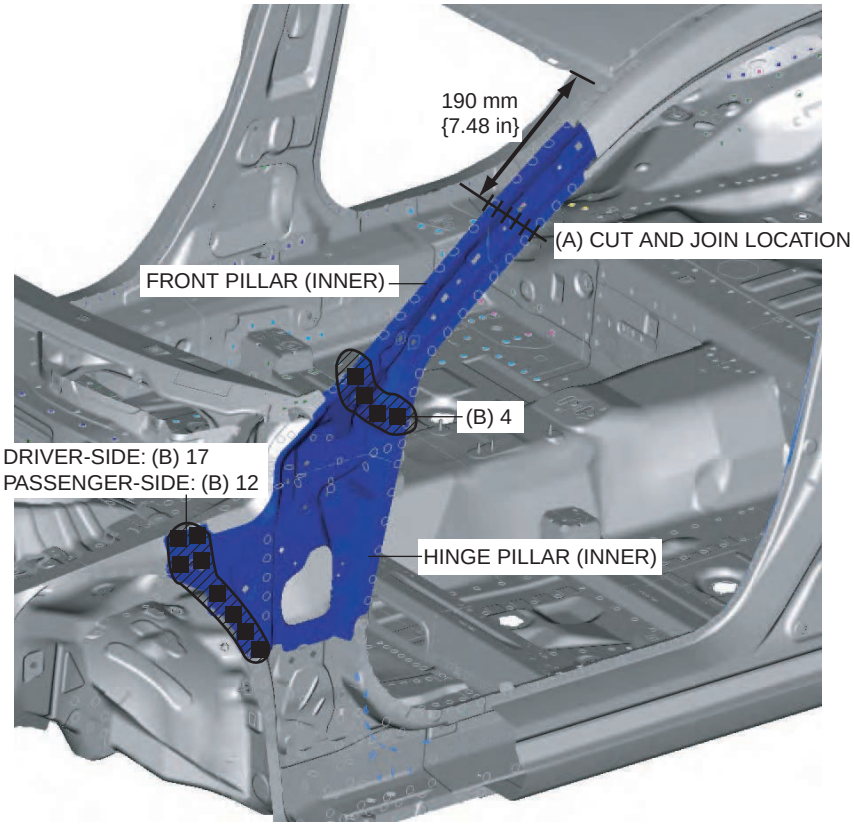

am6zzb0000038

6. Plug weld the 5 locations indicated by (C) from the room side shown in the figure.
7. Plug weld the 18 locations indicated by (D) shown in the figure, then install the hinge reinforcement.
8. Cut and join the location indicated by (E) shown in the figure.

cardiagn.com

9. Plug weld the 10 locations indicated by (F) shown in the figure, then install the front pillar reinforcement.

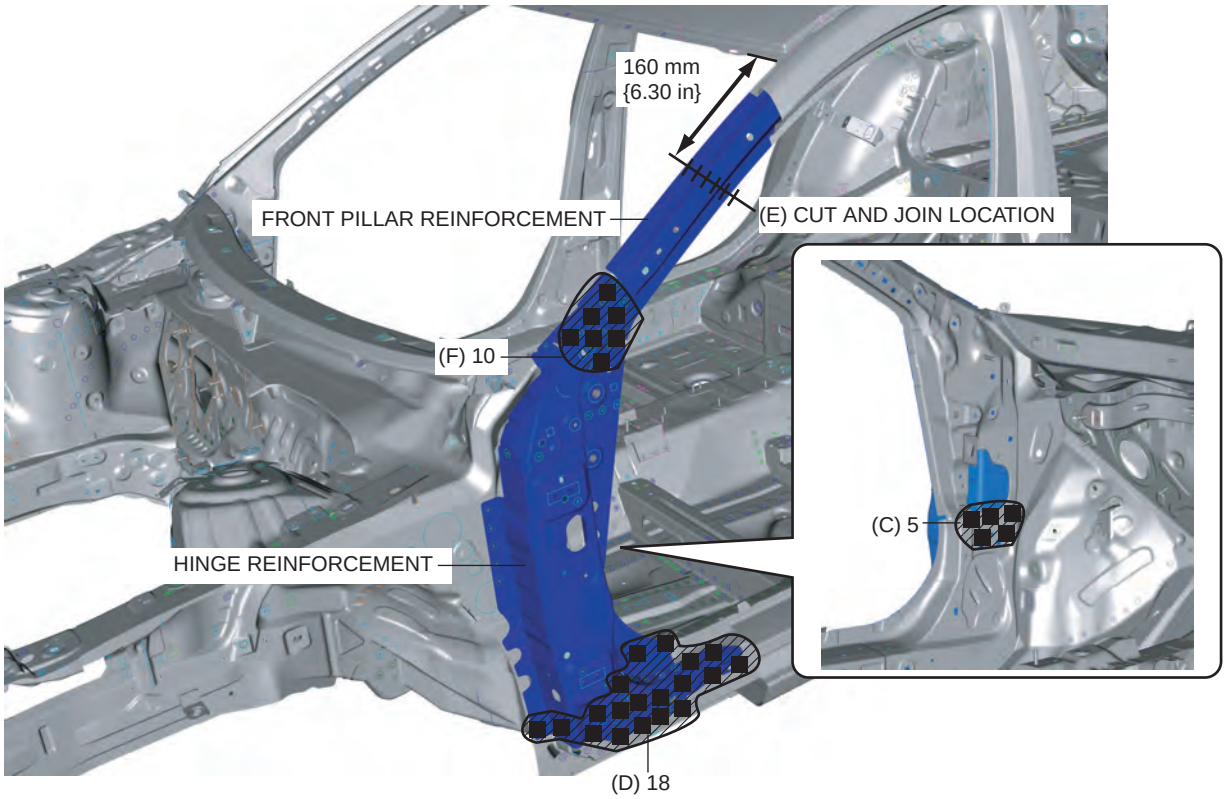

am6zzb0000038

10. Cut and join the 2 locations indicated by (G) shown in the figure.

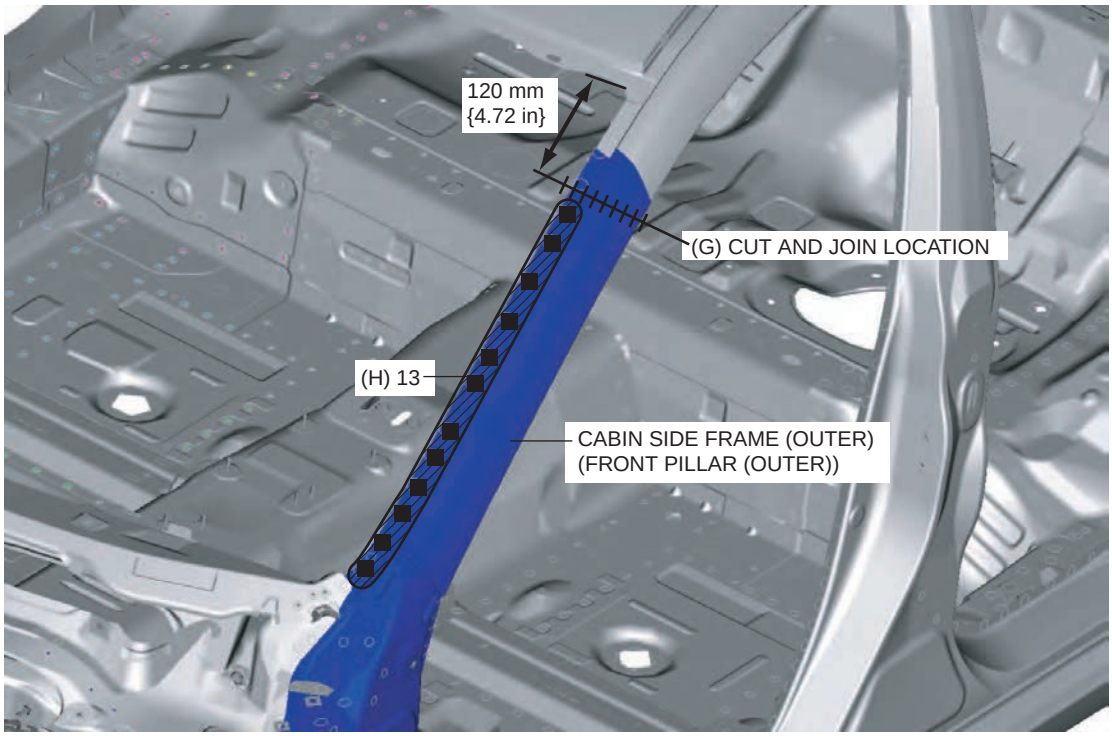

am6zzb0000039

cardiagn.com

11. Plug weld the 74 locations indicated by (H) shown in the figure, then install the cabin side frame (outer).

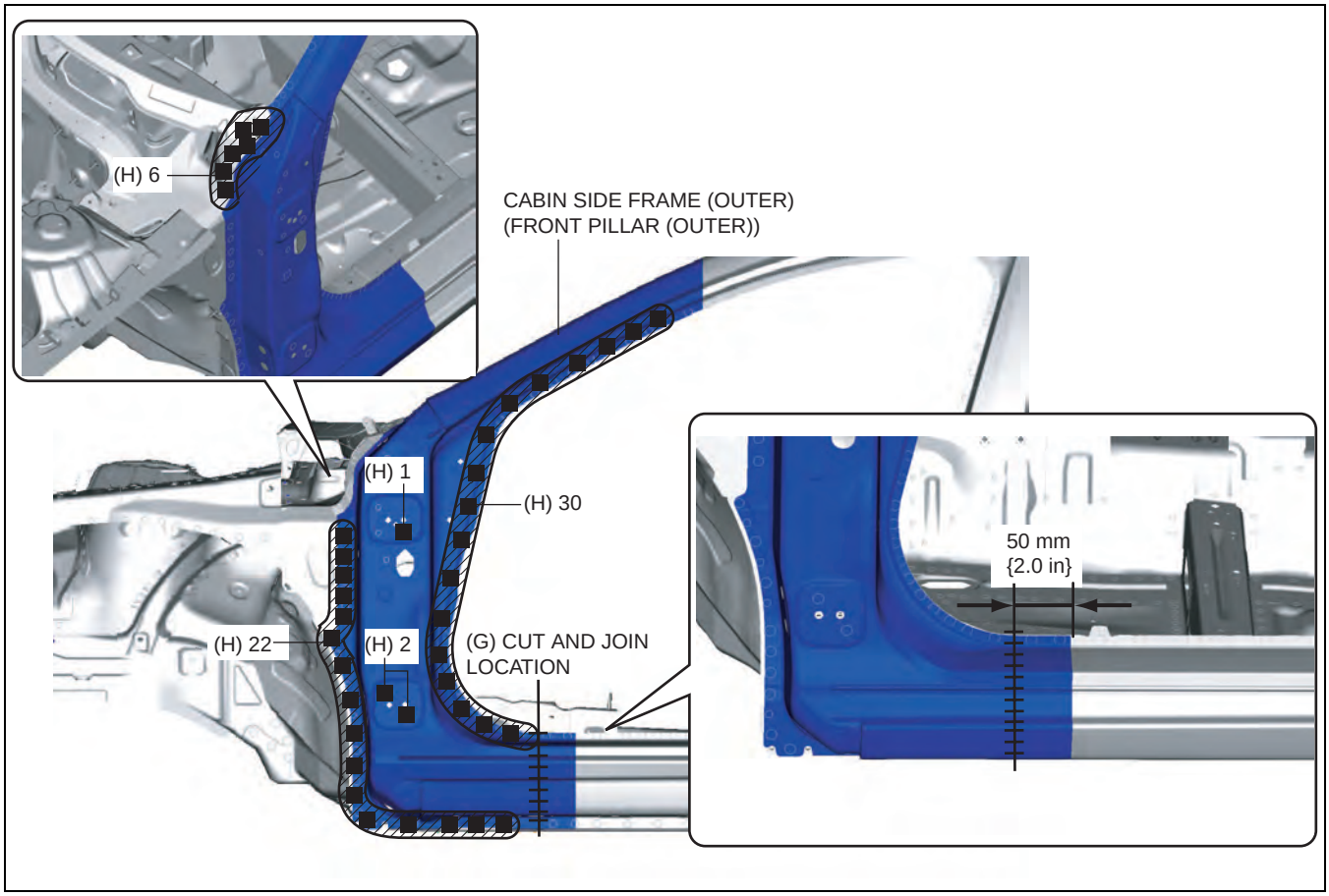

am6zzb0000051

cardiagn.com

CENTER PILLAR REMOVAL [PANEL REPLACEMENT]

id098008743900

Symbol Mark

SYMBOL MARK	MEANING
●	SPOT WELDING
	ROUGH CUT LOCATION

am6zzb0000039

Removal Procedure

Caution

- **Remove the curtain air bag module to prevent damage before servicing.**

Front-side

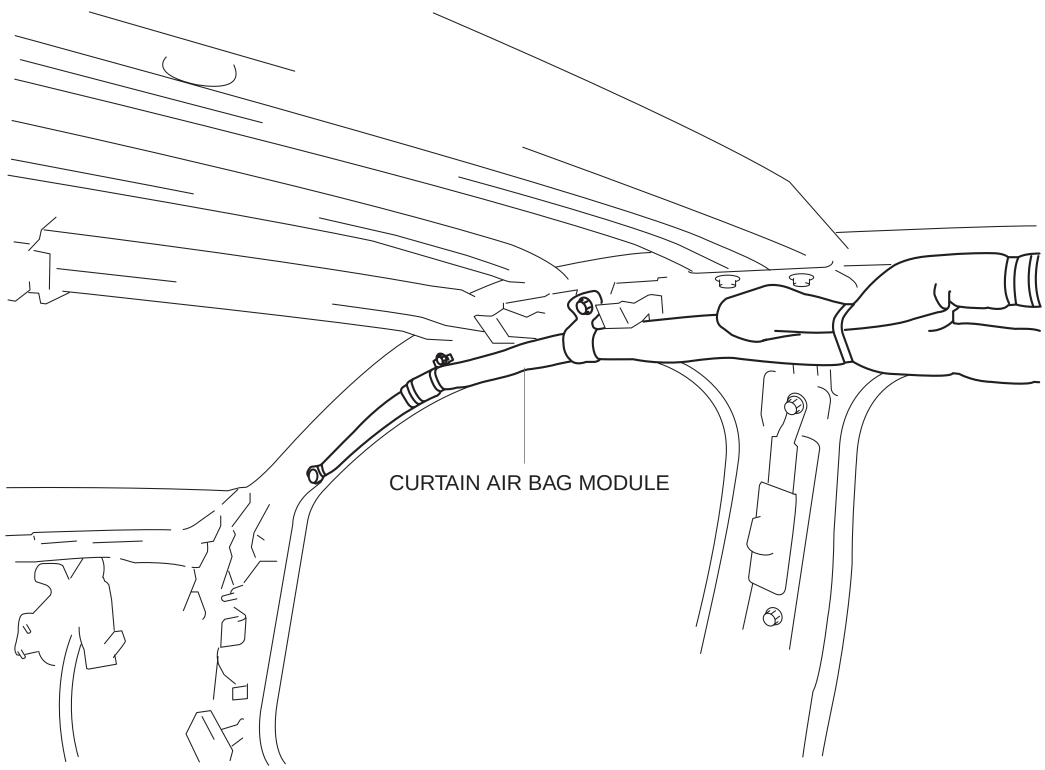

am6xub0000010

cardiagn.com

Rear-side

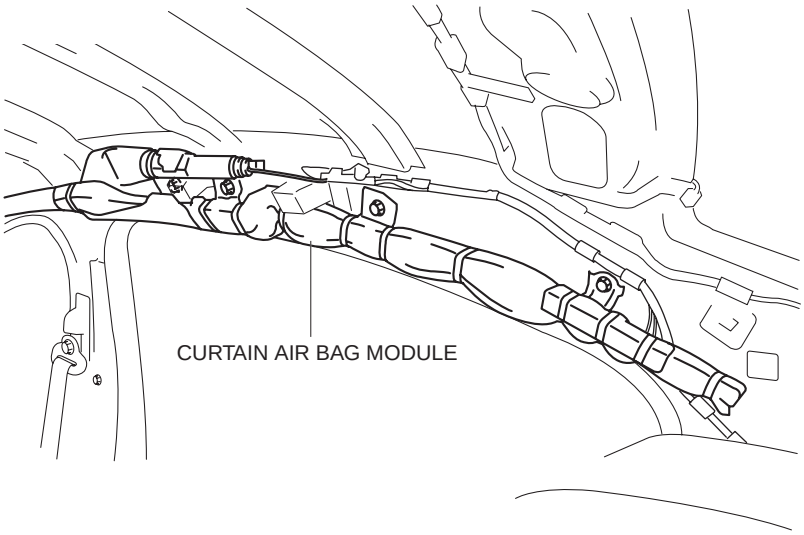

am6xub0000009

Caution

- **Avoid cutting with a blowtorch or similar tools as the insulator (shaded area) is flammable.**

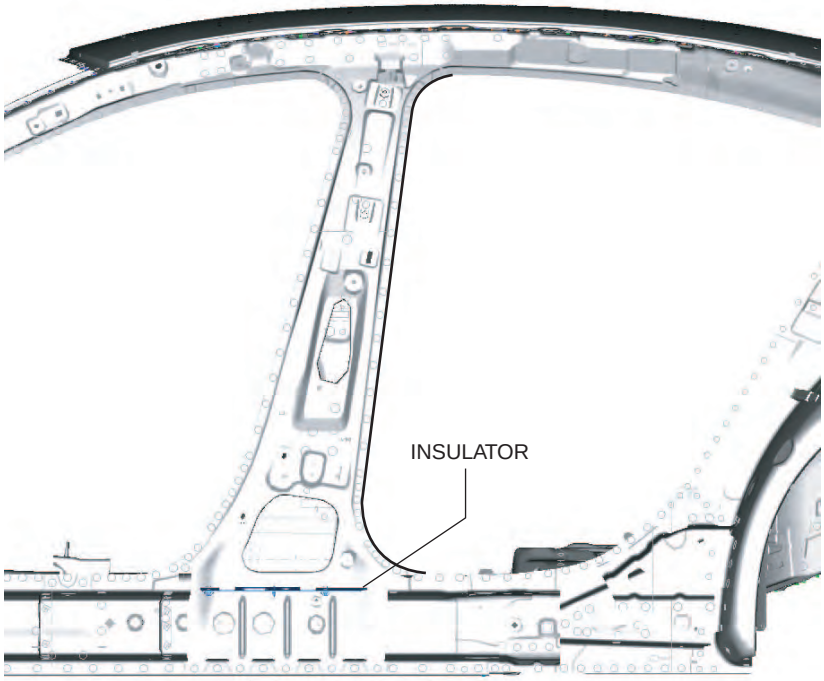

am6zzb0000039

1. Rough cut the 3 locations indicated by (A) shown in the figure.

cardiagn.com

2. Drill the 81 locations indicated by (B) shown in the figure, then remove the cabin side frame (outer) (center pillar (outer)).

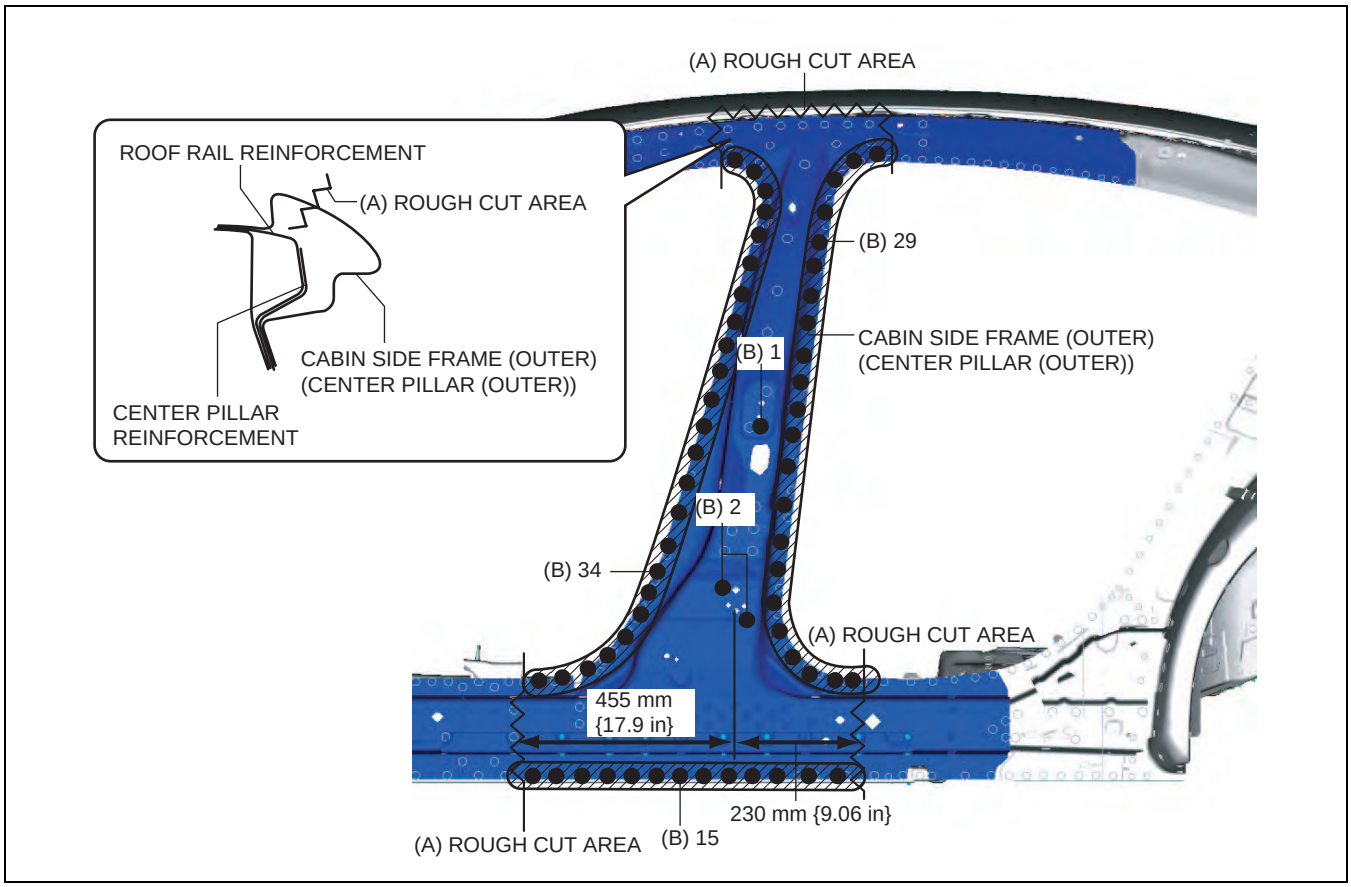

am6xub0000009

3. Drill the 36 locations indicated by (C) shown in the figure, then remove the center pillar reinforcement.

cardiagn.com

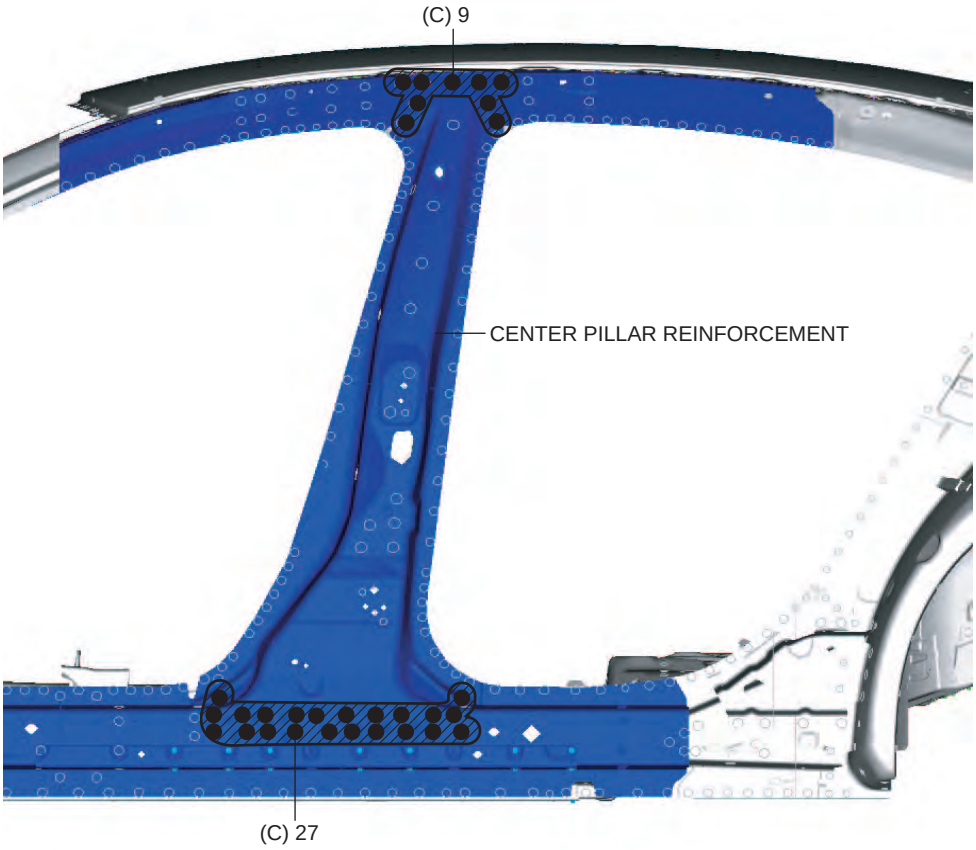

am6xub0000009

4. Rough cut the location (D) shown in the figure.
5. Drill the 5 locations indicated by (E) shown in the figure.
6. Drill the 6 locations indicated by (F) from the room side shown in the figure.

cardiagn.com

7. Pull the center pillar (inner) in the direction of arrow shown in the figure, then remove it from between the side sill (inner) and side sill reinforcement.

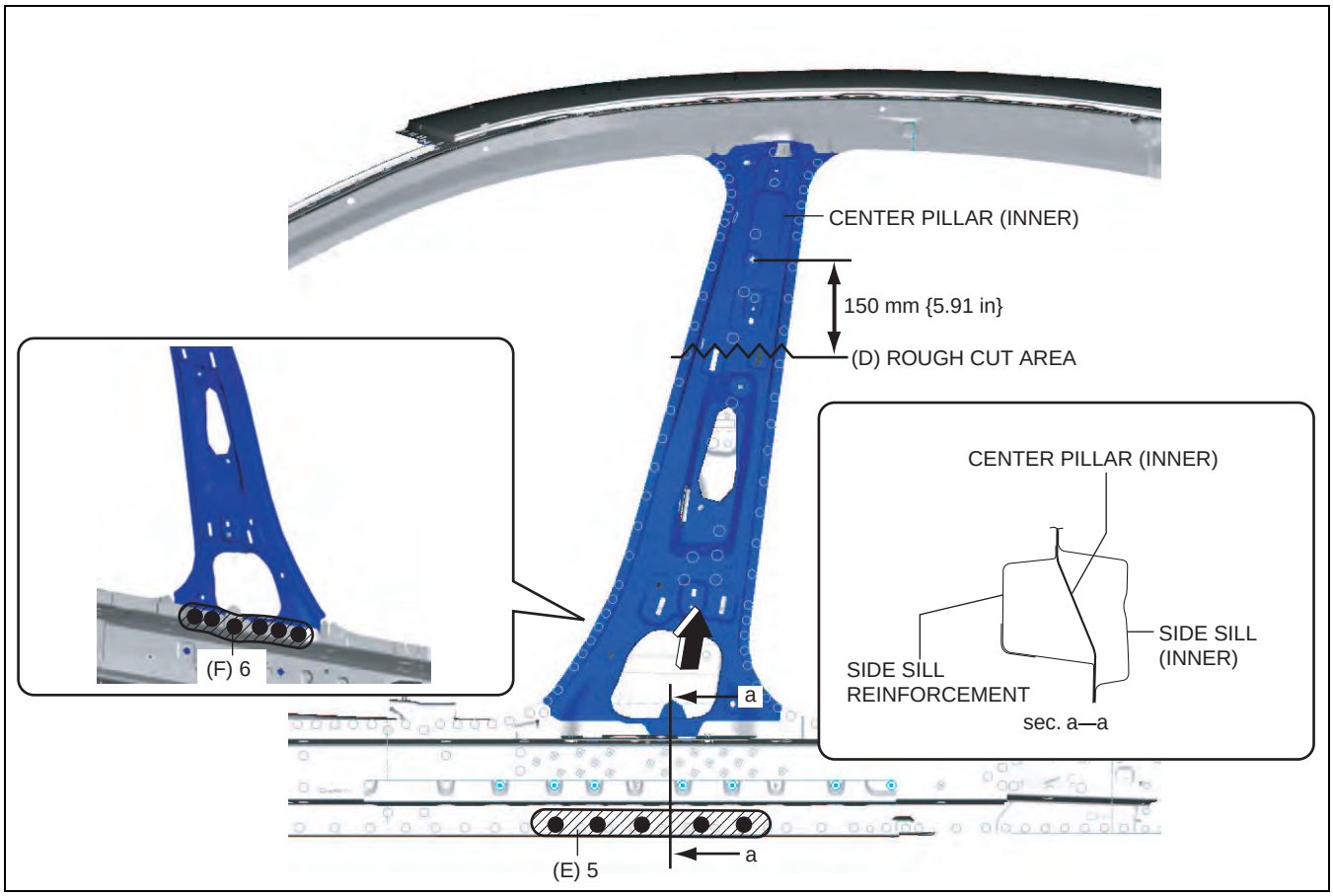

am6zzb0000039

cardiagn.com

CENTER PILLAR INSTALLATION [PANEL REPLACEMENT]

id098008744000

Symbol Mark

SYMBOL MARK	MEANING
■	PLUG WELDING (CO_2 ARC WELDING)
┼┼┼┼┼┼┼┼┼┼┼┼┼┼┼┼┼┼┼┼┼┼┼┼┼┼┼┼┼┼	CONTINUOUS CO_2 ARC WELDING (CUT-AND-JOIN LOCATION)

am6zzb0000039

Installation Procedure

1. When installing new parts, measure and adjust the body as necessary to conform with standard dimensions.
2. Drill holes for the plug welding before installing the new parts.
3. After temporarily installing new parts, make sure the related parts fit properly.
4. Insert the end of the center pillar (inner) shown in the figure, between the side sill (inner) and side sill reinforcement.
5. Cut and join location indicated by (A) shown in the figure.
6. Plug weld the 6 locations indicated by (B) from the room side shown in the figure, then install the center pillar (inner).

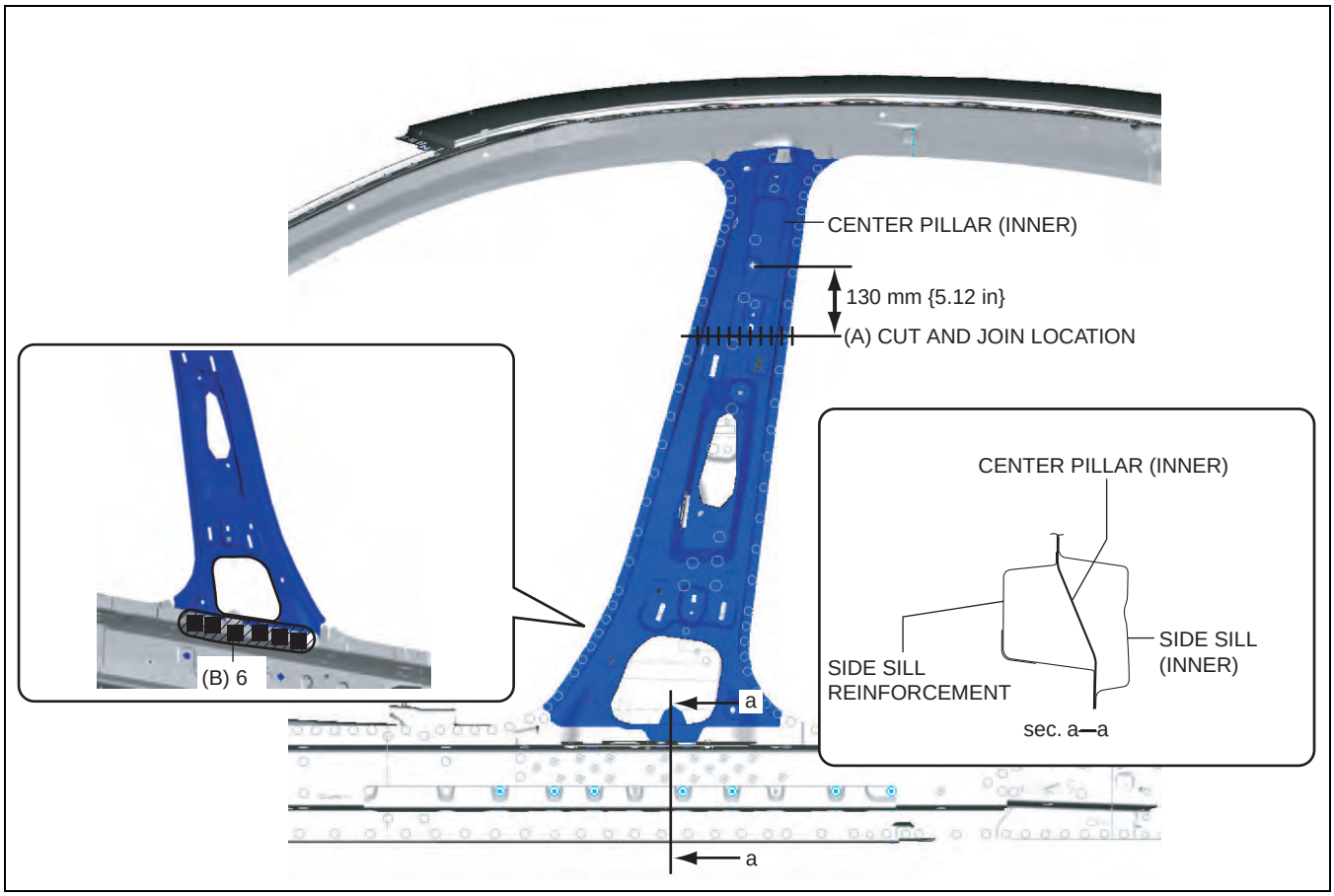

am6zzb0000040

7. Plug weld the 36 locations indicated by (C) shown in the figure, then install the center pillar reinforcement.

cardiagn.com

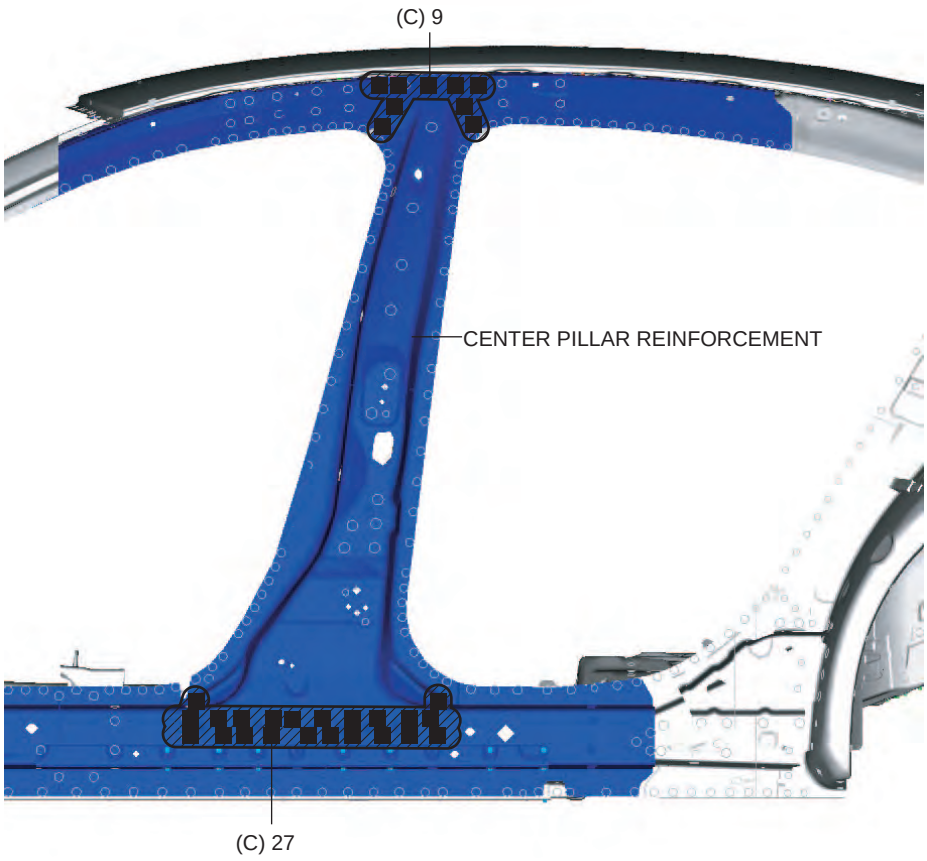

am6xub0000011

8. Cut and join the 3 locations indicated by (D) shown in the figure.
9. Plug weld the 81 locations indicated by (E) shown in the figure, then install the cabin side frame (outer) (center pillar (outer)).

cardiagn.com

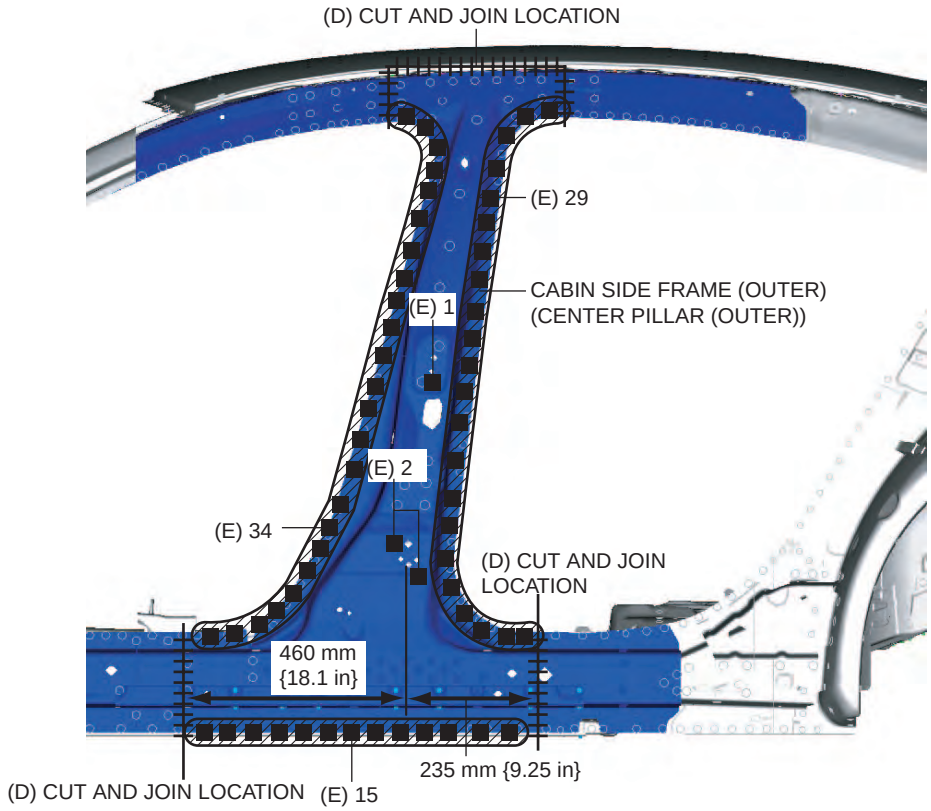

am6xub0000011

cardiagn.com

SIDE SILL PANEL REMOVAL [PANEL REPLACEMENT]

id098008615300

Symbol Mark

SYMBOL MARK	MEANING
●	SPOT WELDING
⁄⁄⁄⁄⁄⁄⁄⁄⁄⁄⁄⁄⁄⁄⁄⁄⁄⁄⁄⁄	ROUGH CUT LOCATION

am6zzb0000040

Removal Procedure
Side Sill (Front-side)

1. Rough cut the 2 locations indicated by (A) shown in the figure.
2. Drill the 16 locations indicated by (B) shown in the figure.

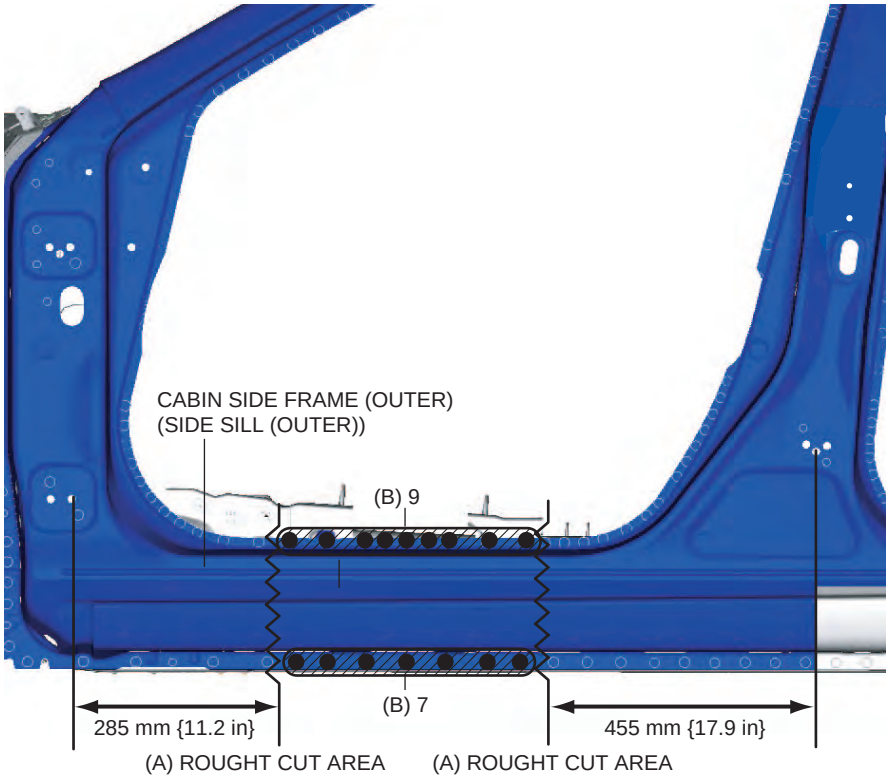

am6zzb0000040

3. Remova the cabin side frame (outer) (side sill (outer)).

cardiagn.com

Side Sill (Component)

1. Rough cut the 3 locations indicated by (A) shown in the figure.
2. Drill the 106 locations indicated by (B) shown in the figure, remove the cabin side frame (outer) (side sill (outer)).

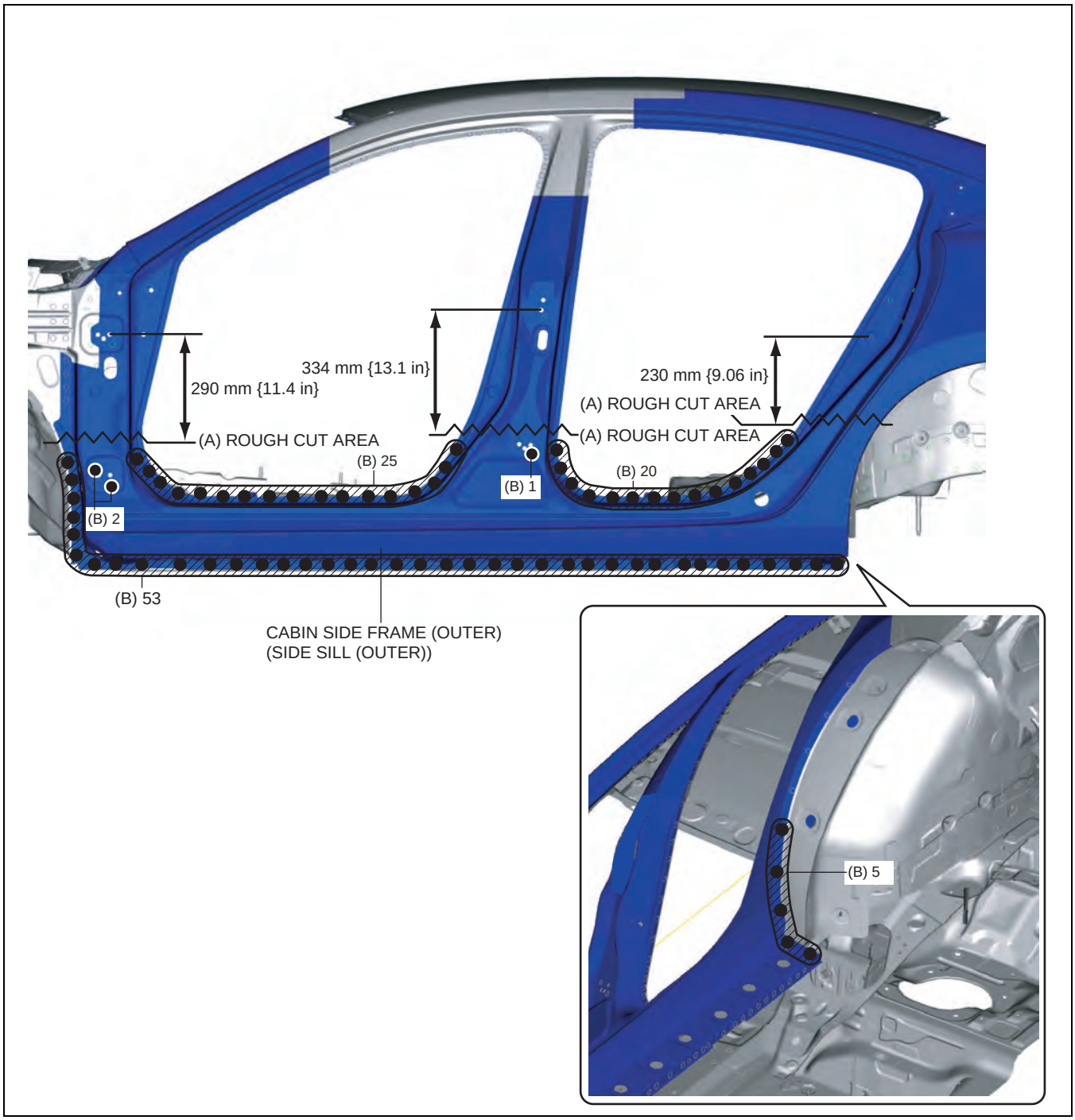

am6xub0000010

3. Drill the 50 locations indicated by (C) shown in the figure.

cardiagn.com

4. Pull the side sill reinforcement from the side sill (inner), hinge reinforcement and center pillar reinforcement, and then remove it.

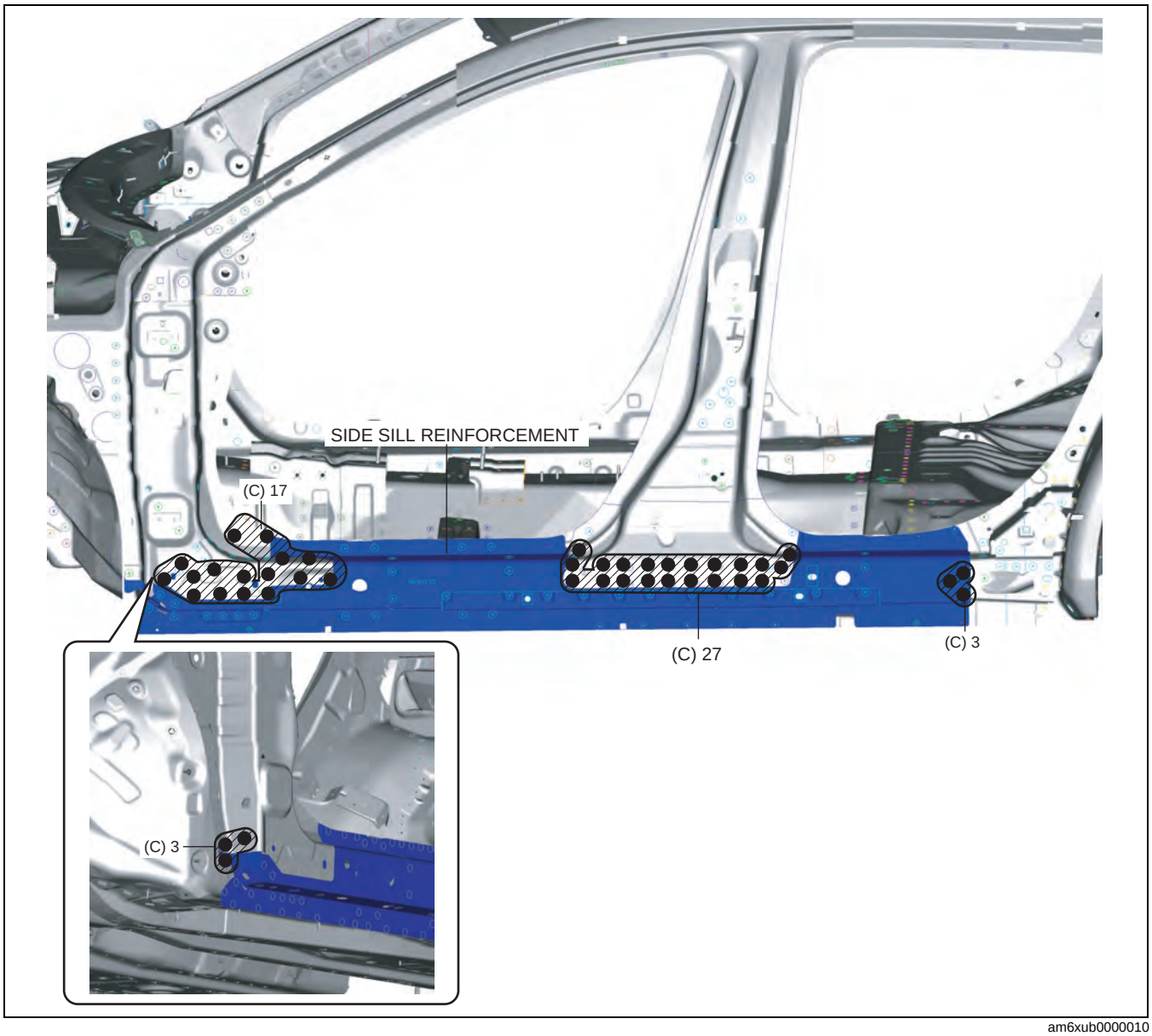

am6xub0000010

cardiagn.com

SIDE SILL PANEL INSTALLATION [PANEL REPLACEMENT]

id098008615200

Symbol Mrak

SYMBOL MARK	MEANING
●	SPOT WELDING
■	PLUG WELDING (CO_2 ARC WELDING)
⊣⊣⊣⊣⊣⊣⊣⊣⊣⊣⊣⊣⊣⊣⊣⊣⊣⊣⊣⊣⊣⊣⊣⊣⊣⊣⊣⊣	CONTINUOUS CO_2 ARC WELDING (CUT-AND-JOIN LOCATION)

am6zzb0000040

Installation Procedure
Side Sill (Front-side)

1. When installing new parts, measure and adjust the body as necessary to conform with standard dimensions.
2. Drill holes for the plug welding before installing the new parts.
3. After temporarily installing new parts, make sure the related parts fit properly.
4. Cut and join the locations indicated by (A) shown in the figure.
5. Plug weld the 16 locations indicated by (B) shown in the figure, then install the cabin side frame (outer) (side sill (outer)).

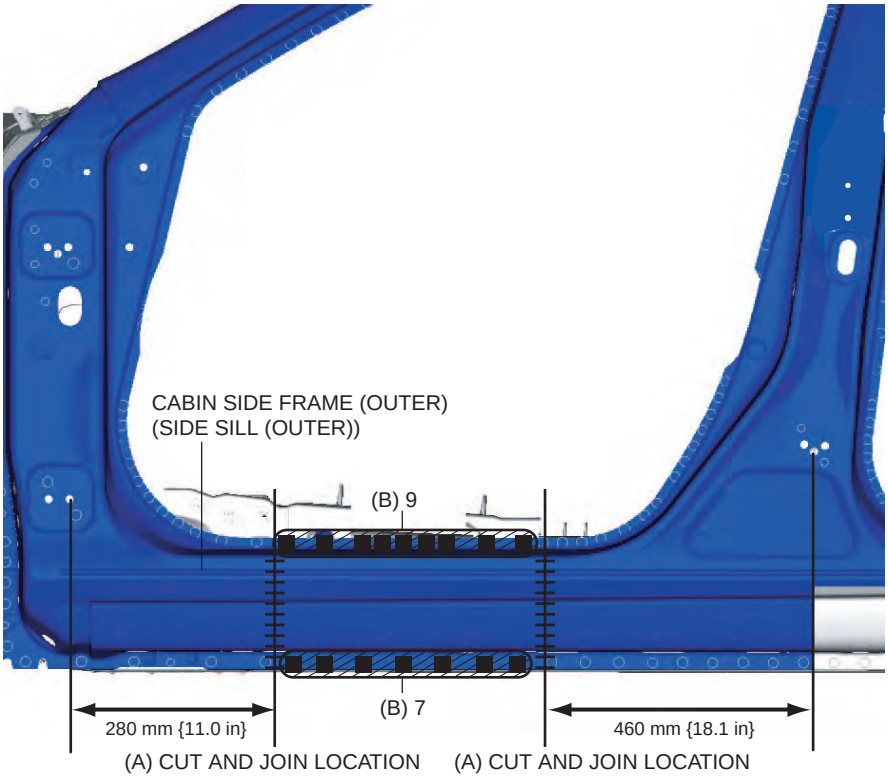

am6zzb0000040

cardiagn.com

Side Sill (component)

1. When installing new parts, measure and adjust the body as necessary to conform with standard dimensions.
2. Drill holes for the plug welding before installing the new parts.
3. After temporarily installing new parts, make sure the related parts fit properly.
4. Plug weld the 50 locations indication by (A) shown in the figure, then install the side sill reinforcement.

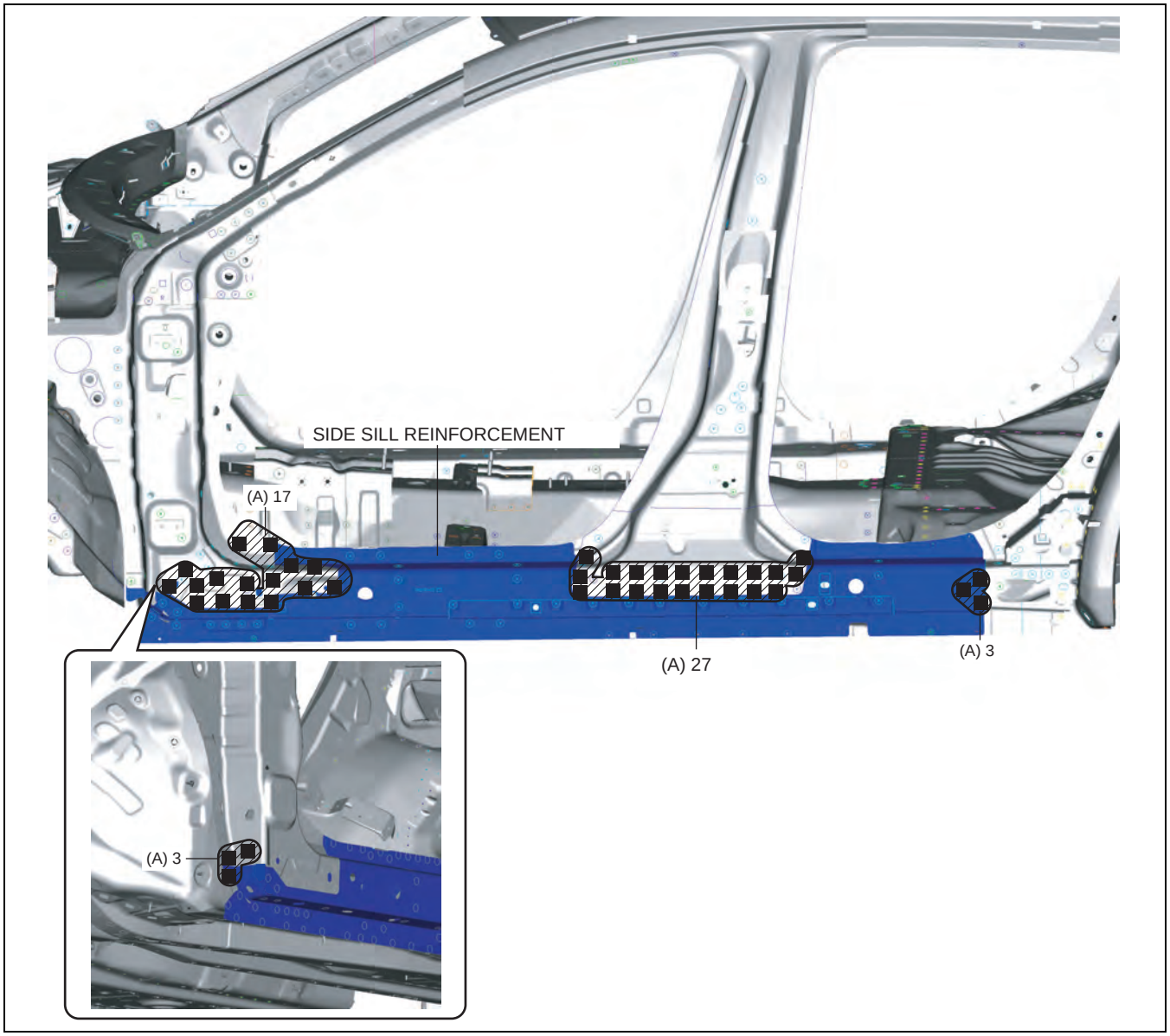

am6xub0000010

5. Cut and join the 3 locations indicated by (B) shown in the figure.

cardiagn.com

6. Plug weld the 106 locations indicated by (C) shown in the figure, then install the cabin side frame (outer) (side sill (outer)).

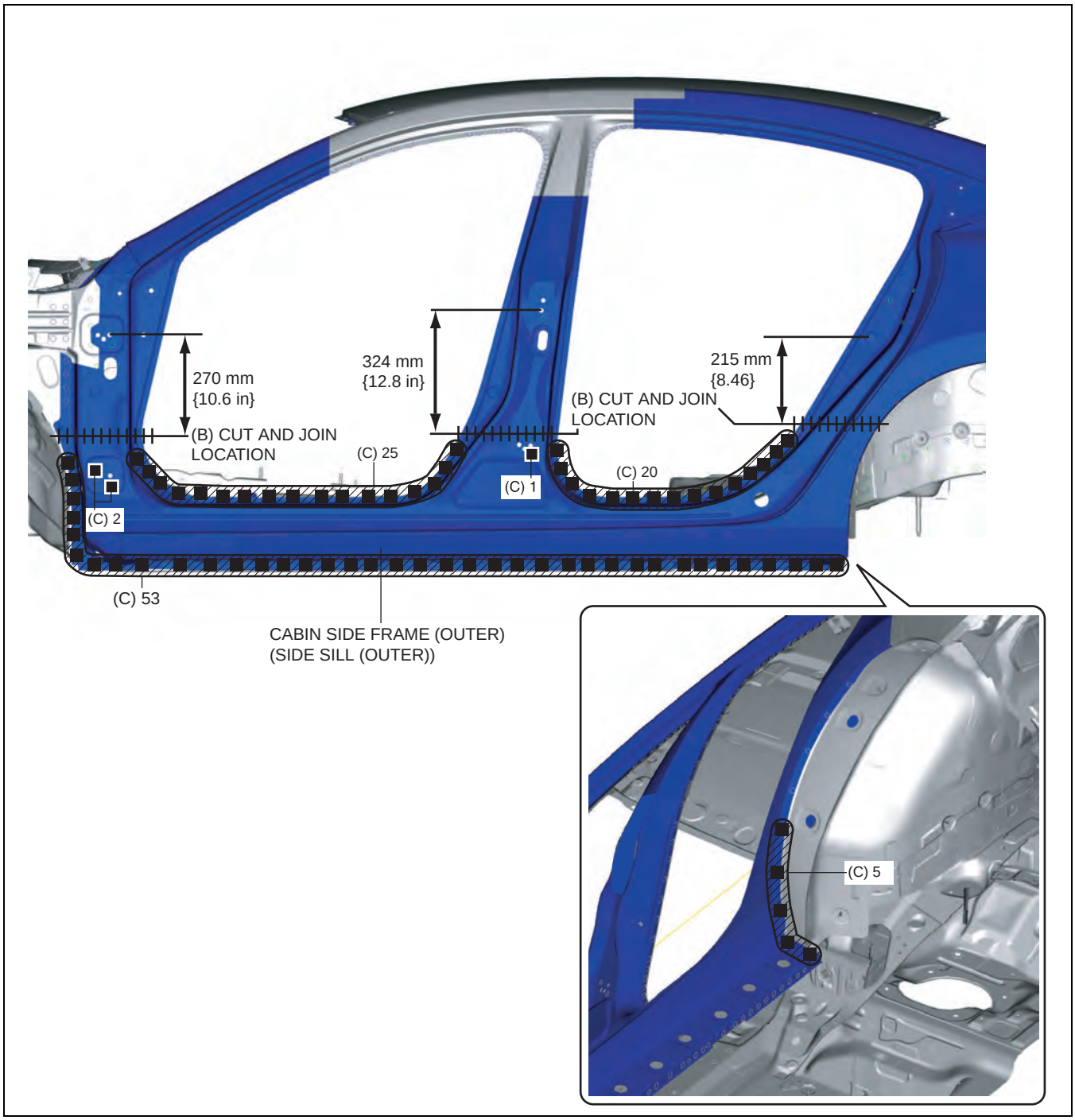

am6xub0000010

cardiagn.com

REAR FENDER PANEL REMOVAL [PANEL REPLACEMENT]

id098008744900

Symbol Mark

SYMBOL MARK	MEANING
●	SPOT WELDING
⁄⁄⁄⁄⁄⁄⁄⁄⁄⁄⁄⁄⁄⁄⁄⁄⁄⁄⁄⁄	ROUGH CUT LOCATION

am6zzb0000041

Removal Procedure

Caution

- **Avoid cutting with a blowtorch or similar tools as the insulator (shaded area) is flammable.**

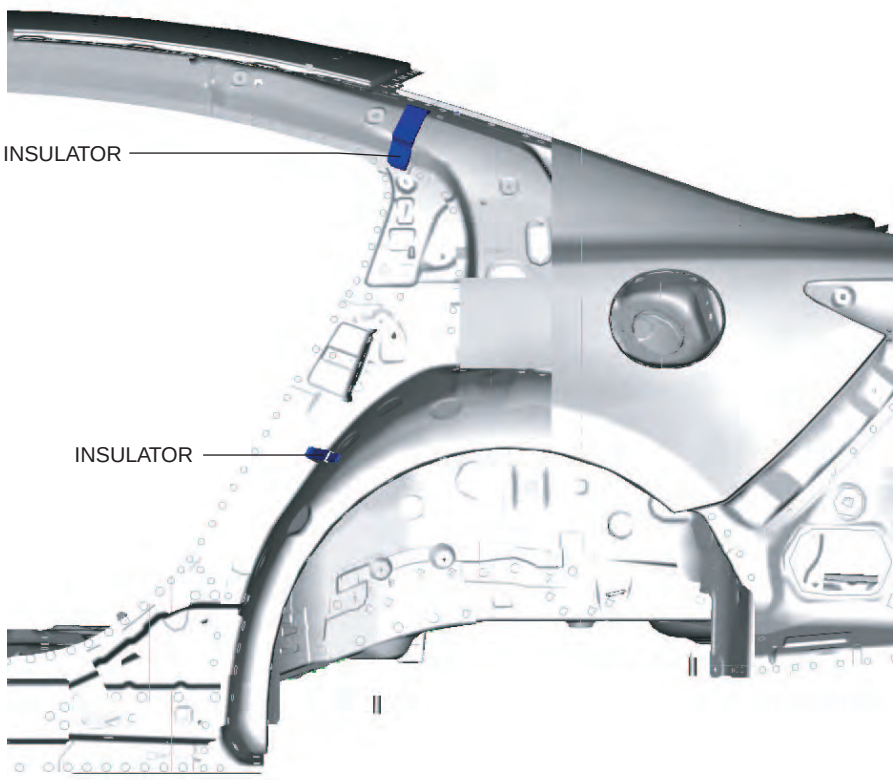

am6zzb0000041

1. Rough cut the 2 locations indicated by (A) shown in the figure.

cardiagn.com

2. Drill the 66 locations indicated by (B) shown in the figure.

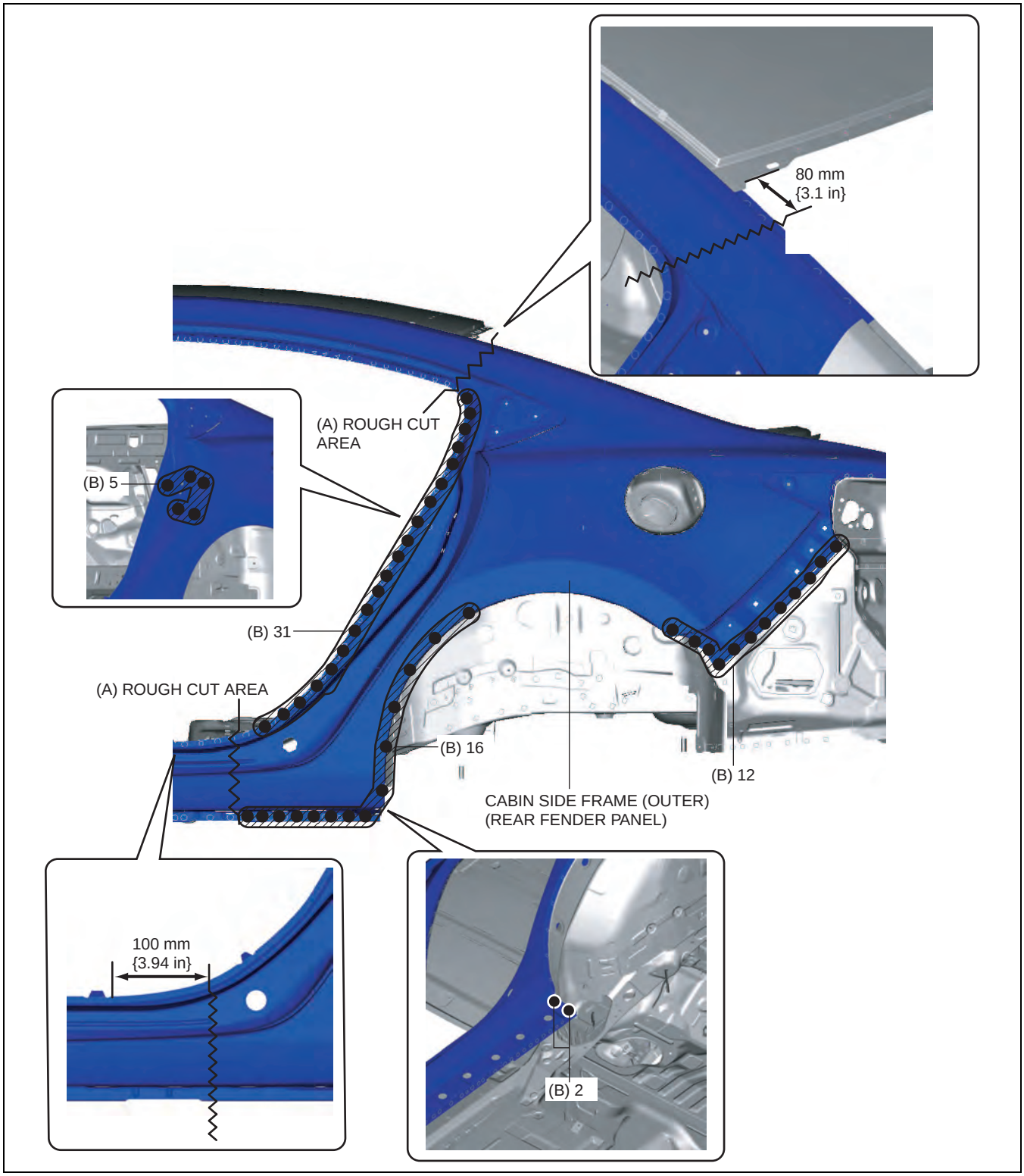

am6zzb0000041

3. Drill the 27 locations indicated by (C) shown in the figure.

cardiagn.com

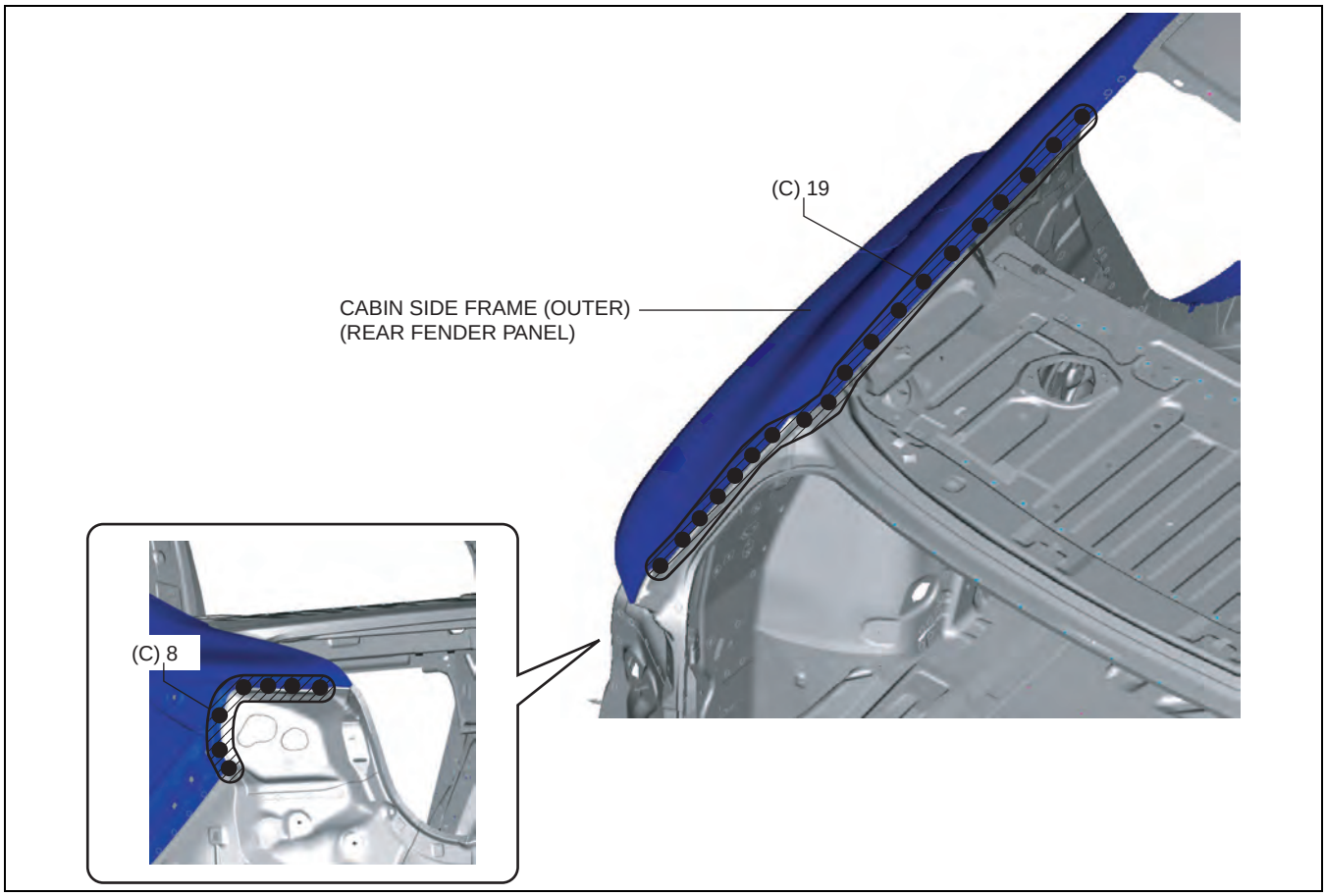

am6zzb0000041

4. Remove the cabin side frame (outer) (rear fender panel).

cardiagn.com

REAR FENDER PANEL INSTALLATION [PANEL REPLACEMENT]

id098008745000

Symbol Mark

SYMBOL MARK	MEANING
■	PLUG WELDING (CO_2 ARC WELDING)
	CONTINUOUS CO_2 ARC WELDING (CUT-AND-JOIN LOCATION)

am6zzb0000041

Installation Procedure

1. When installing new parts, measure and adjust the body as necessary to conform with standard dimensions.
2. Drill holes for the plug welding before installing the new parts.
3. After temporarily installing new parts, make sure the related parts fit properly.
4. Before installing new parts, apply body sealer to the wheel arch line.

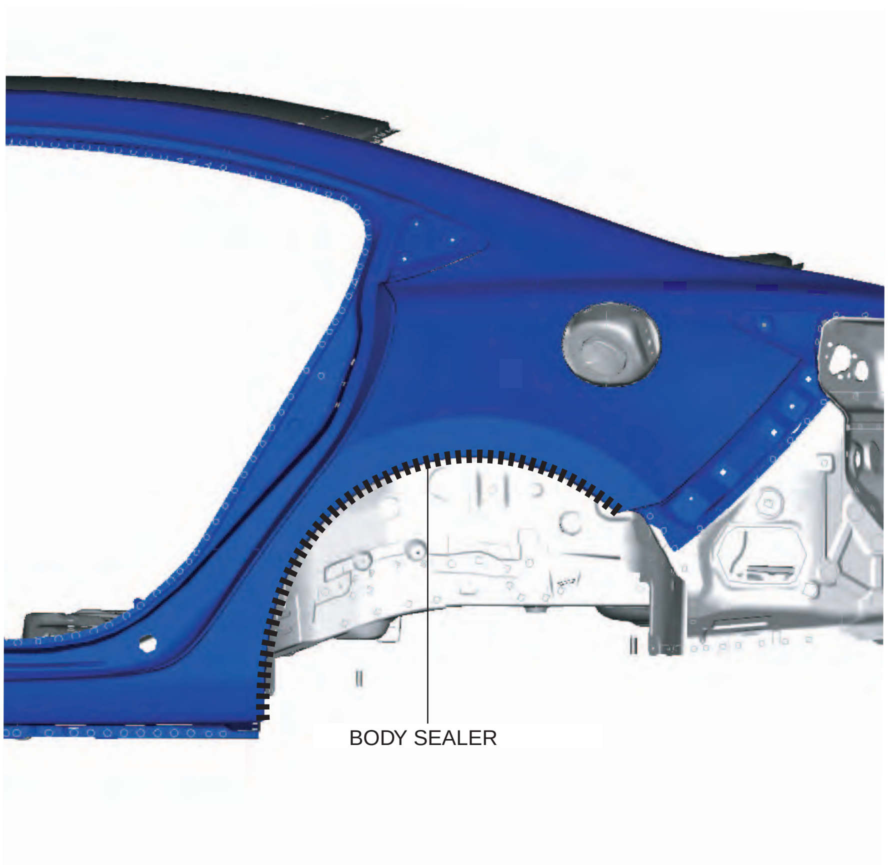

am6zzb0000041

5. Cut and join the 2 locations indicated by (A) shown in the figure.

cardiagn.com

6. Plug weld the 66 locations indicated by (B) shown in the figure.

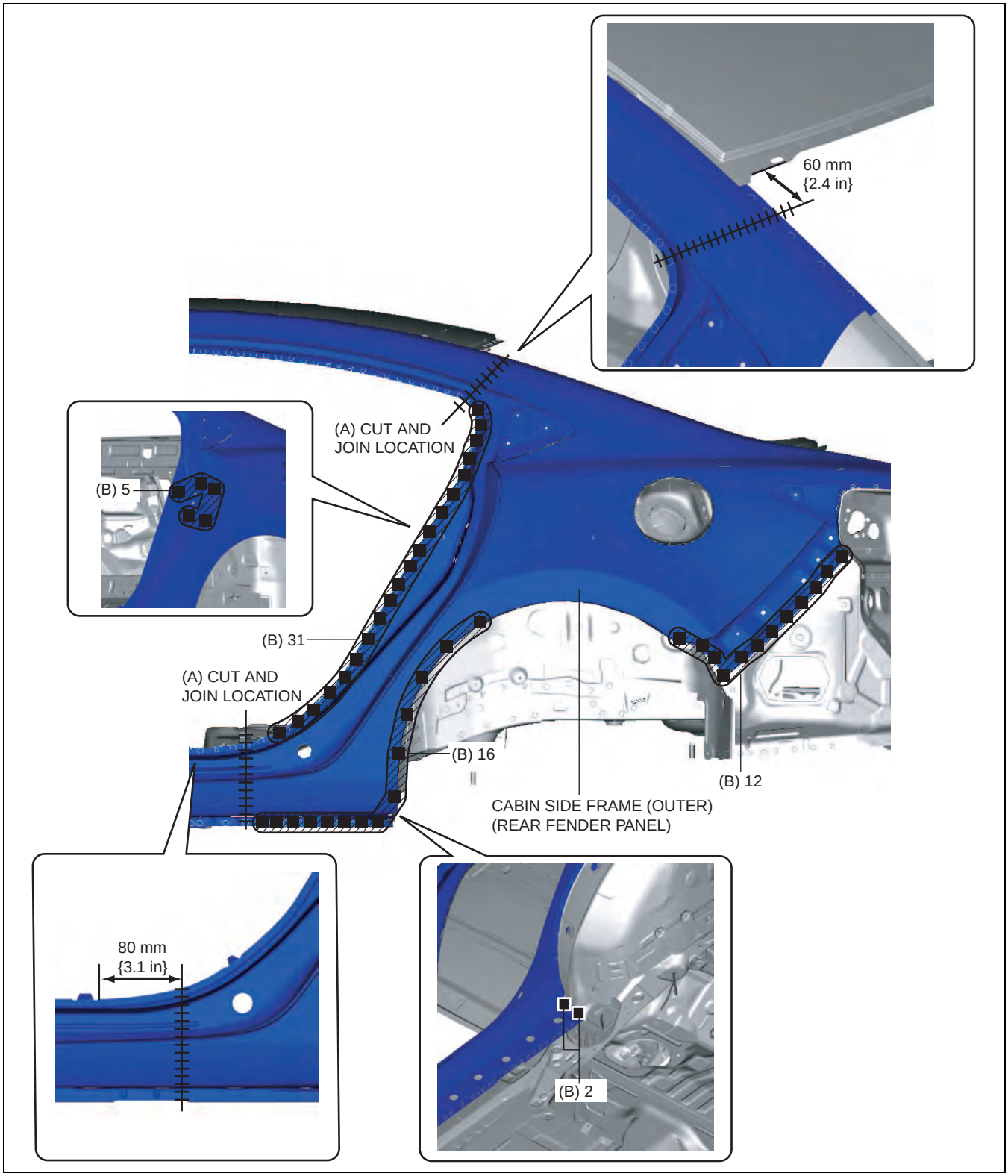

am6zzb0000042

7. Plug weld the 27 locations indicated by (C) shown in the figure, then install the cabin side frame (rear fender panel).

cardiagn.com

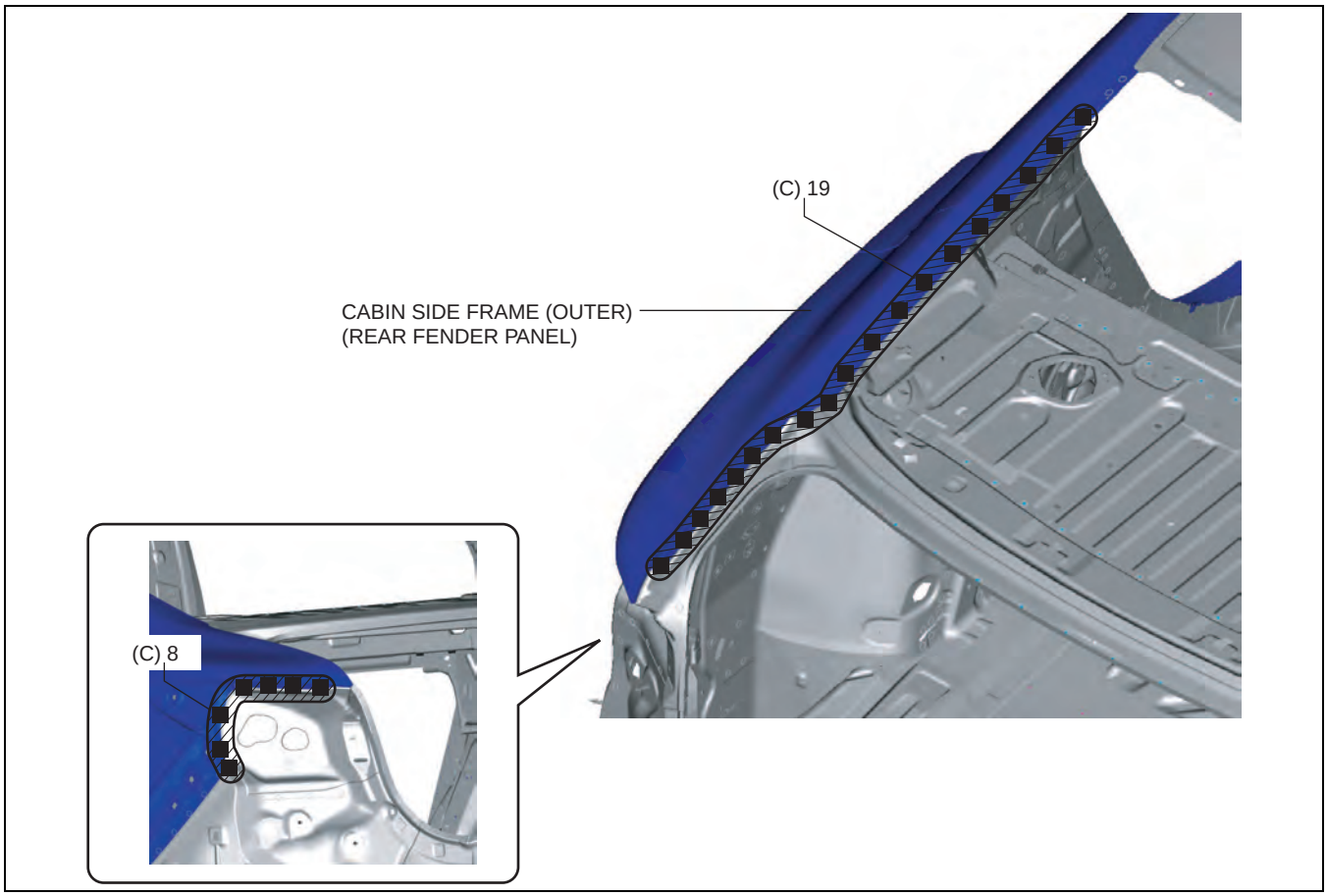

am6zzb0000042

cardiagn.com

REAR FENDER PANEL (LOWER) REMOVAL [PANEL REPLACEMENT]

id098008614300

Symbol Mark

SYMBOL MARK	MEANING
●	SPOT WELDING

am6zzb0000042

Removal Procedure

1. Drill the 24 locations shown in the figure.

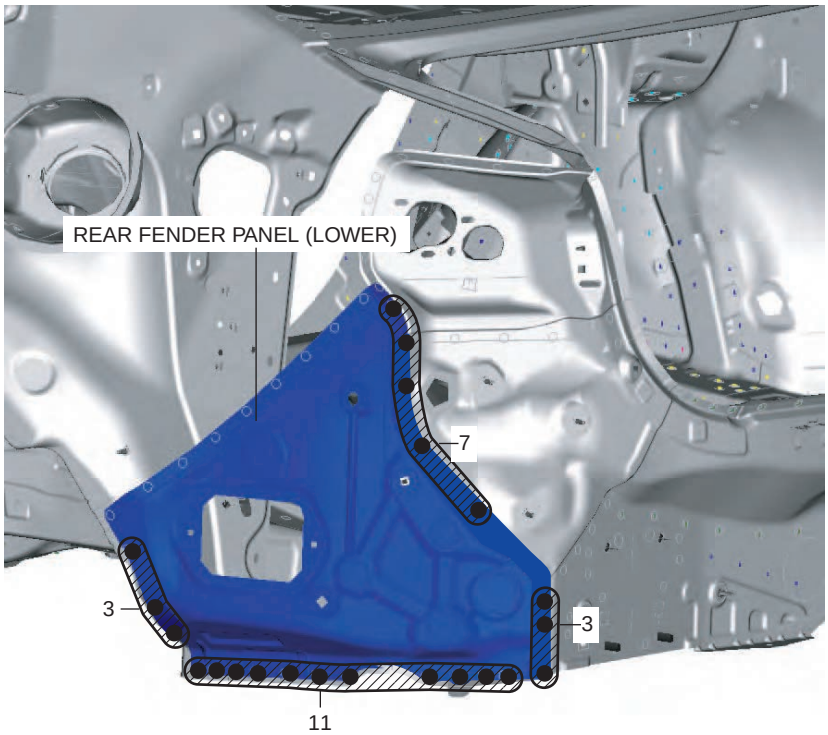

am6zzb0000042

2. Remove the rear fender panel (lower).

cardiagn.com

REAR FENDER PANEL (LOWER) INSTALLATION [PANEL REPLACEMENT]

id098008614400

Symbol Mark

SYMBOL MARK	MEANING
■	PLUG WELDING (CO_2 ARC WELDING)

am6zzb0000042

Installation Procedure

1. When installing new parts, measure and adjust the body as necessary to conform with standard dimensions.
2. After temporarily installing new parts, make sure the related parts fit properly.
3. Plug weld the 24 locations shown in the figure, then install the rear fender panel (lower).

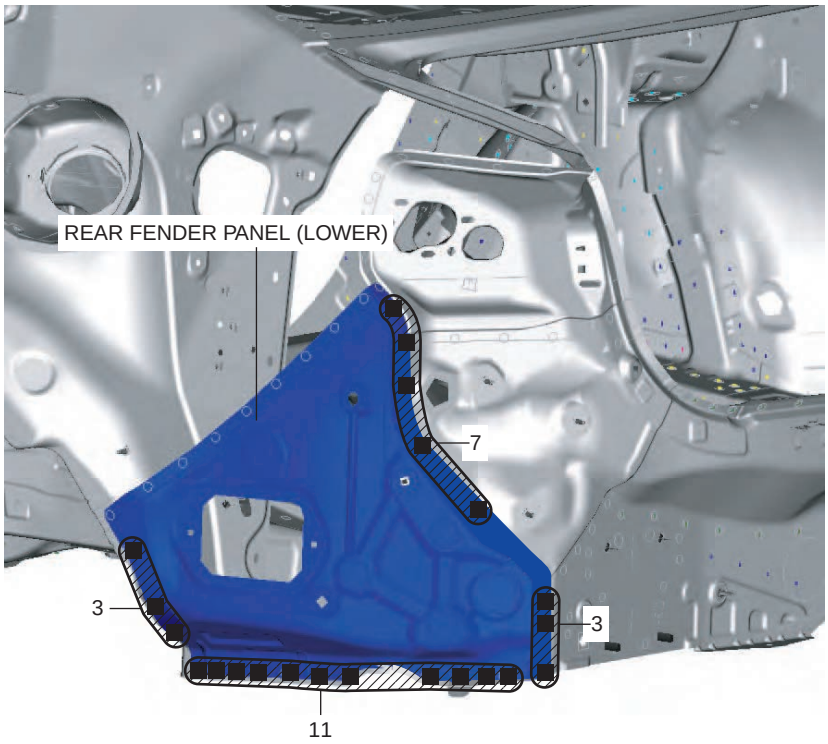

am6zzb0000042

cardiagn.com

CORNER PLATE REMOVAL [PANEL REPLACEMENT]

id098008610400

Symbol Mark

SYMBOL MARK	MEANING
●	SPOT WELDING

am6zzb0000043

Removal Procedure

1. Drill the 15 locations shown in the figure.

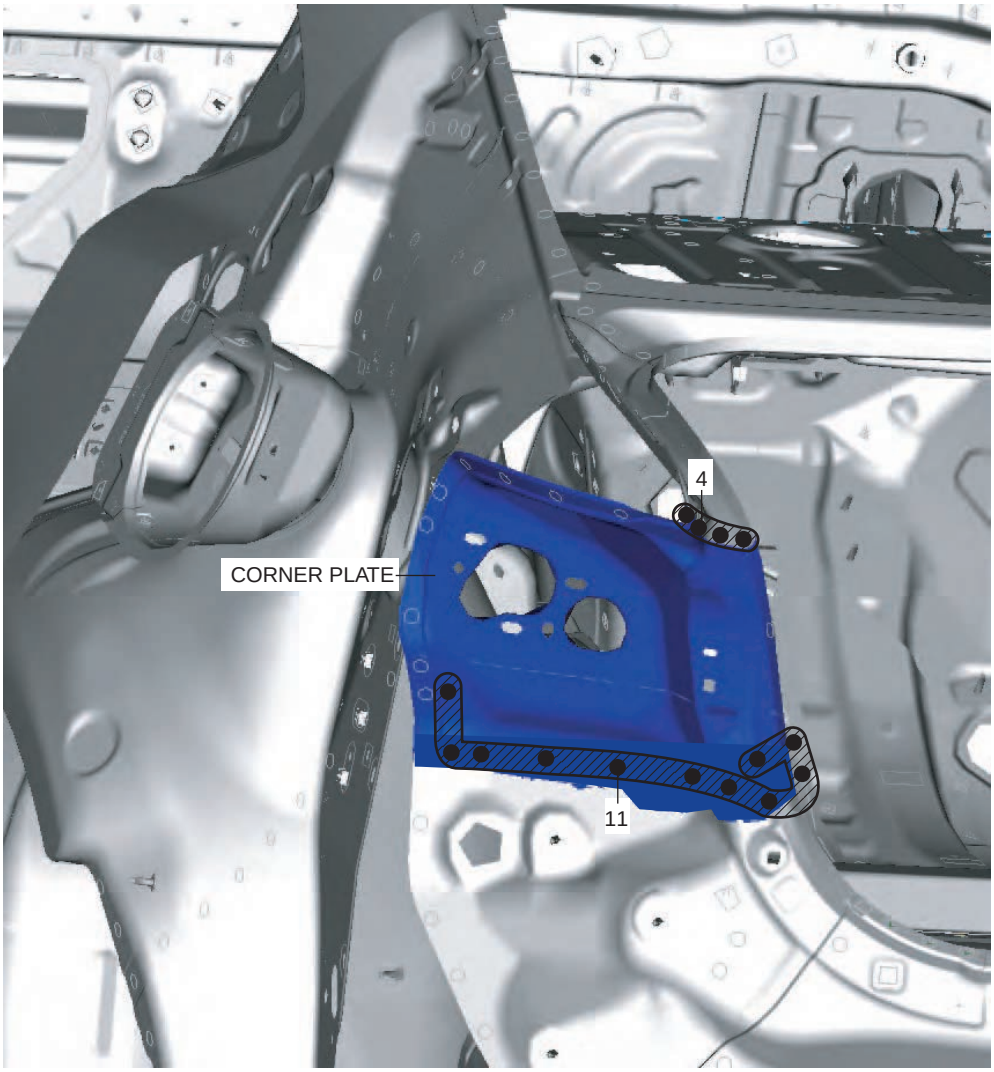

am6zzb0000043

2. Remove the corner plate.

cardiagn.com

CORNER PLATE INSTALLATION [PANEL REPLACEMENT]

id098008610500

Symbol Mark

SYMBOL MARK	MEANING
●	SPOT WELDING
■	PLUG WELDING (CO_2 ARC WELDING)

am6zzb0000043

Installation Procedure

1. When installing new parts, measure and adjust the body as necessary to conform with standard dimensions.
2. Drill holes for the plug welding before installing the new parts.
3. After temporarily installing new parts, make sure the related parts fit properly.
4. Plug weld the 12 locations indicated by (A) shown in the figure.
5. Spot weld the 3 locations indicated by (B) shown in the figure, then install the corner plate.

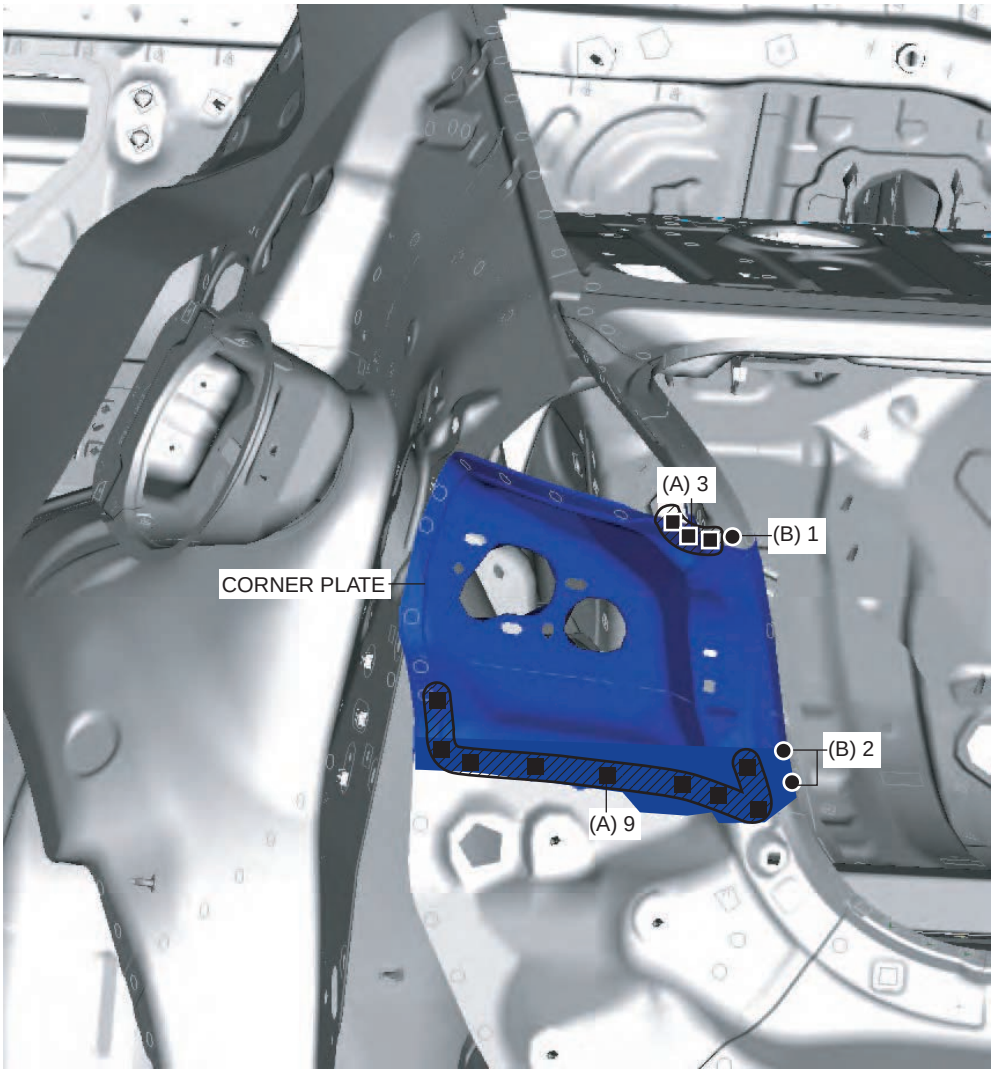

am6zzb0000043

cardiagn.com

REAR FENDER RAIN RAIL REMOVAL [PANEL REPLACEMENT]

id098008902200

Symbol Mark

SYMBOL MARK	MEANING
●	SPOT WELDING

am6zzb0000044

Removal Procedure

1. Drill the 9 locations shown in the figure.

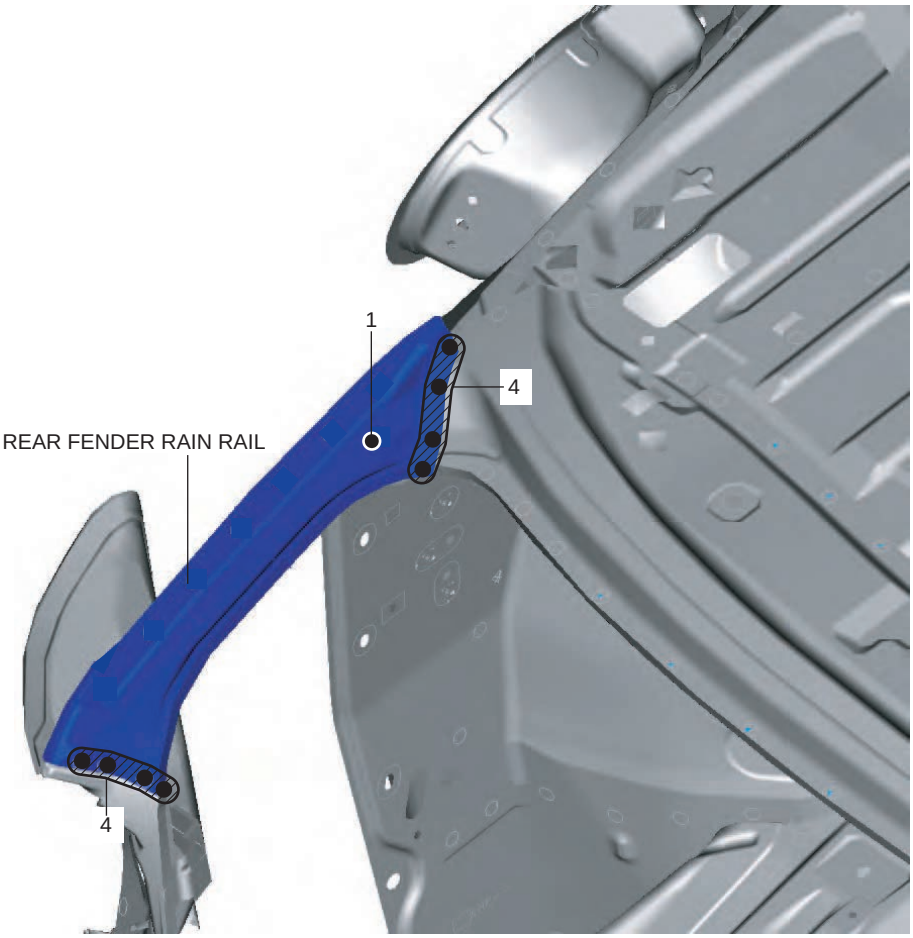

am6zzb0000044

2. Remove the rear fender rain rail.

cardiagn.com

REAR FENDER RAIN RAIL INSTALLATION [PANEL REPLACEMENT]

id098008902300

Symbol Mark

SYMBOL MARK	MEANING
●	SPOT WELDING
■	PLUG WELDING (CO_2 ARC WELDING)

am6zzb0000044

Installation Procedure

1. When installing new parts, measure and adjust the body as necessary to conform with standard dimensions.
2. Drill holes for the plug welding before installing the new parts.
3. After temporarily installing new parts, make sure the related parts fit properly.
4. Plug weld the 7 locations indicated by (A) shown in the figure.
5. Spot weld the 2 locations indicated by (B) shown in the figure, then install the rear fender rain rail.

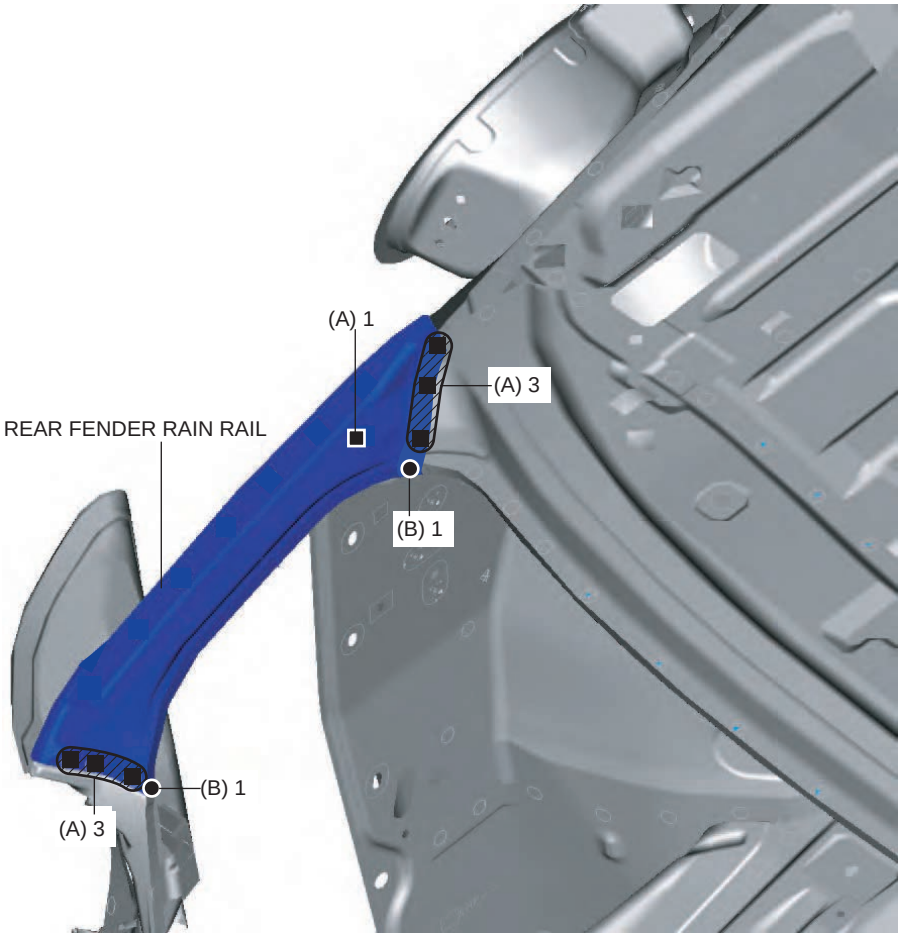

am6zzb0000044

cardiagn.com

REAR END PANEL REMOVAL [PANEL REPLACEMENT]

id098008744500

Symbol Mark

SYMBOL MARK	MEANING
●	SPOT WELDING

am6zzb0000044

Removal Procedure

1. Drill the 71 locations indicated by (A) shown in the figure.
2. Drill the 4 locations indicated by (B) from the room side shown in the figure.

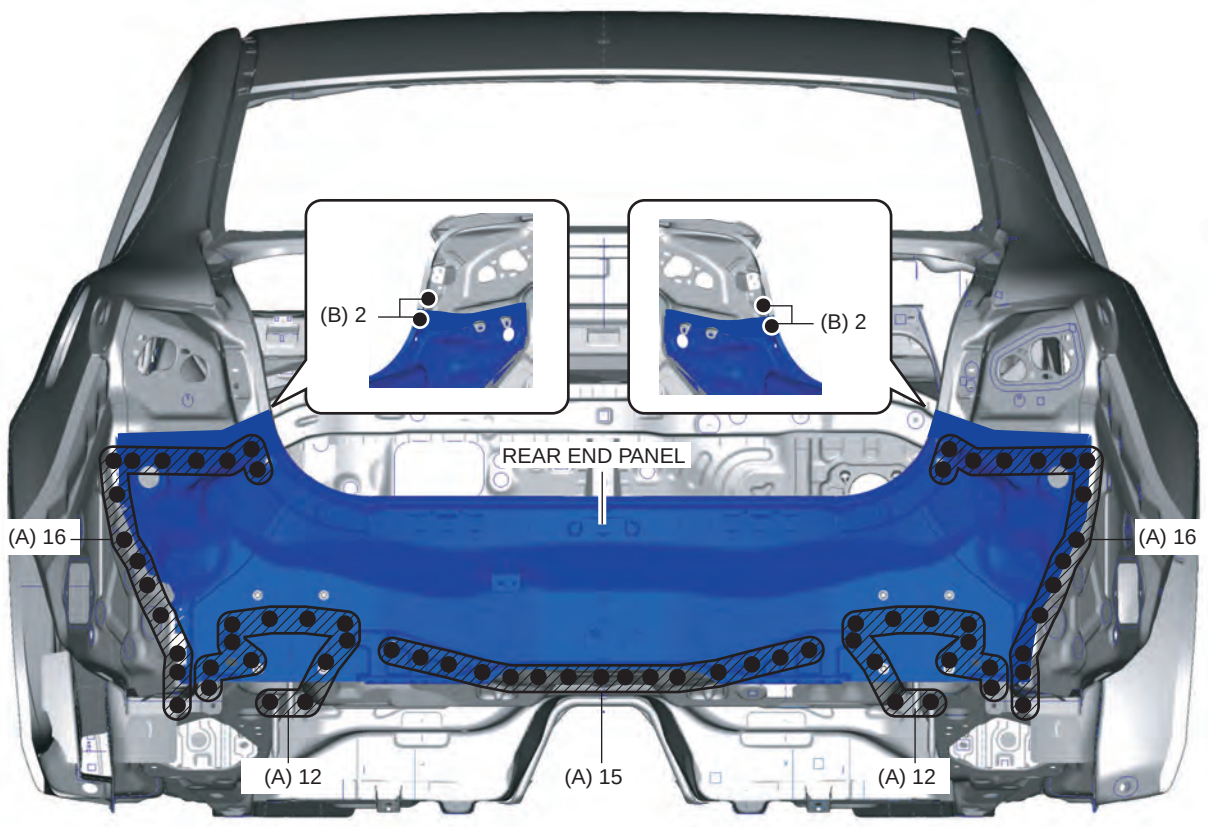

am6zzb0000044

3. Remove the rear end panel.

cardiagn.com

REAR END PANEL INSTALLATION [PANEL REPLACEMENT]

id098008744600

Symbol Mark

SYMBOL MARK	MEANING
■	PLUG WELDING (CO_2 ARC WELDING)

am6zzb0000044

Installation Procedure

1. When installing new parts, measure and adjust the body as necessary to conform with standard dimensions.
2. Drill holes for the plug welding before installing the new parts.
3. After temporarily installing new parts, make sure the related parts fit properly.
4. Plug weld the 71 locations indicated by (A) shown in the figure.
5. Plug weld the 4 locations indicated by (B) from the room side shown in the figure, then install the rear end panel.

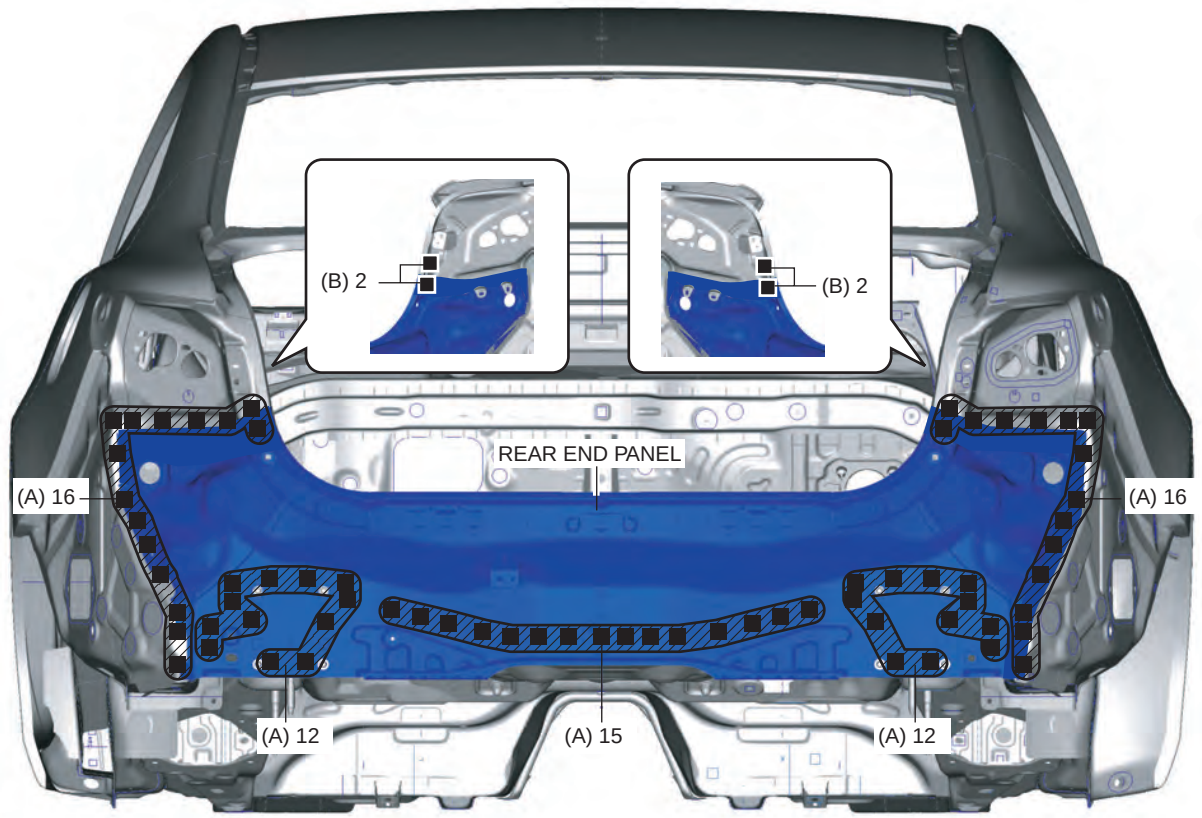

am6zzb0000044

cardiagn.com

FLOOR SIDE PANEL REMOVAL [PANEL REPLACEMENT]

id098008618700

Symbol Mark

SYMBOL MARK	MEANING
●	SPOT WELDING

am6zzb0000045

Removal Procedure

1. Drill the 40 locations indicated by (A) shown in the figure, then remove the floor side panel No.1.

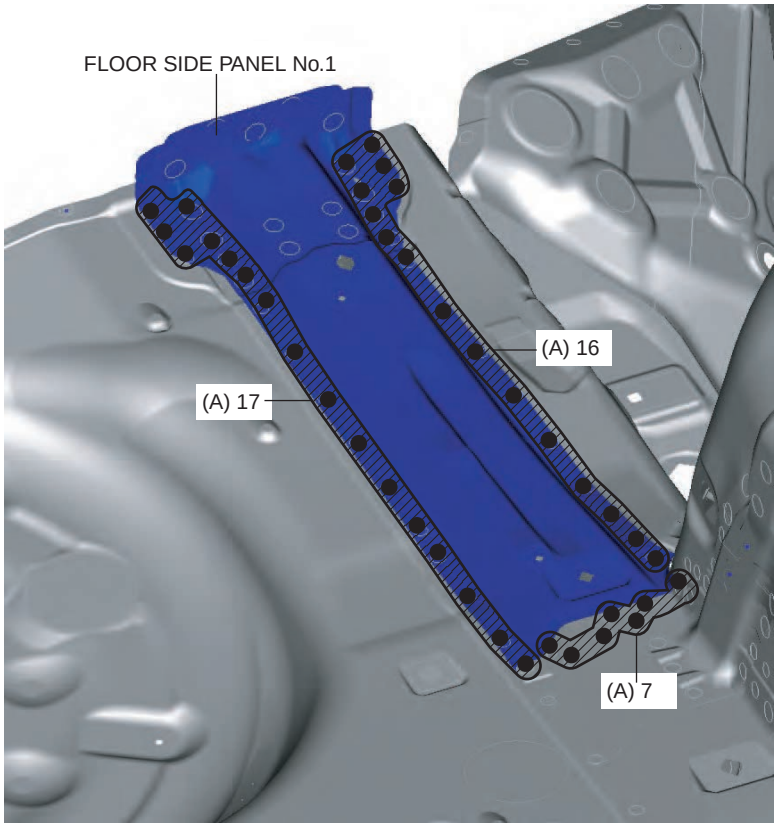

am6zzb0000046

2. Drill the 11 locations indicated by (B) shown in the figure.

cardiagn.com

3. Drill the 7 locations indicated by (C) from the rear wheel housing side shown in the figure.

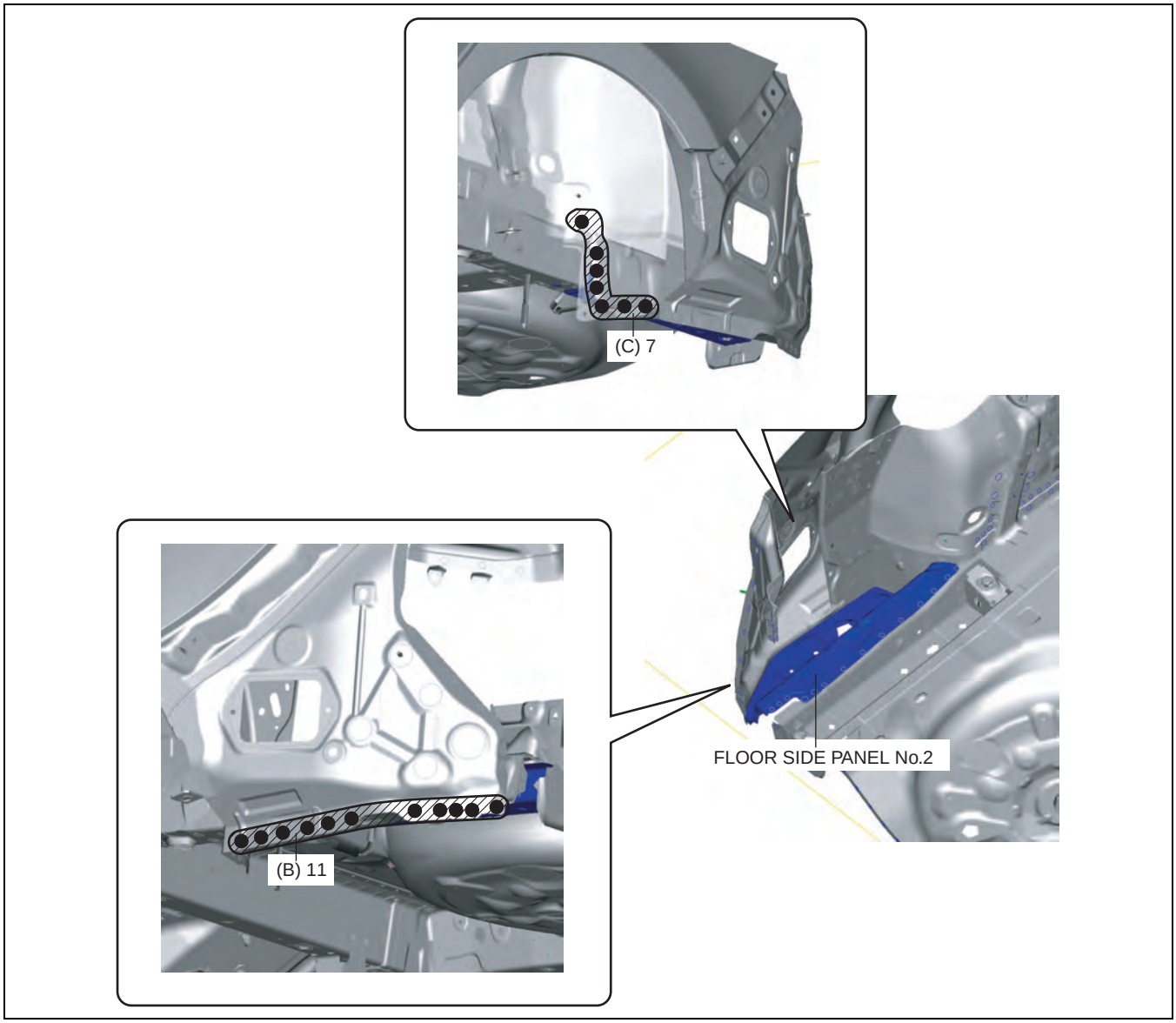

am6zzb0000046

4. Remove the floor side panel No.2.

cardiagn.com

FLOOR SIDE PANEL INSTALLATION [PANEL REPLACEMENT]

id098008618800

Symbol Mark

SYMBOL MARK	MEANING
●	SPOT WELDING
■	PLUG WELDING (CO_2 ARC WELDING)

am6zzb0000046

Installation Procedure

1. When installing new parts, measure and adjust the body as necessary to conform with standard dimensions.
2. Drill holes for the plug welding before installing the new parts.
3. After temporarily installing new parts, make sure the related parts fit properly.
4. Spot weld the 11 locations indicated by (A) shown in the figure.
5. Plug weld the 7 locations indicated by (B) shown in the figure, then install the floor side panel No.2.

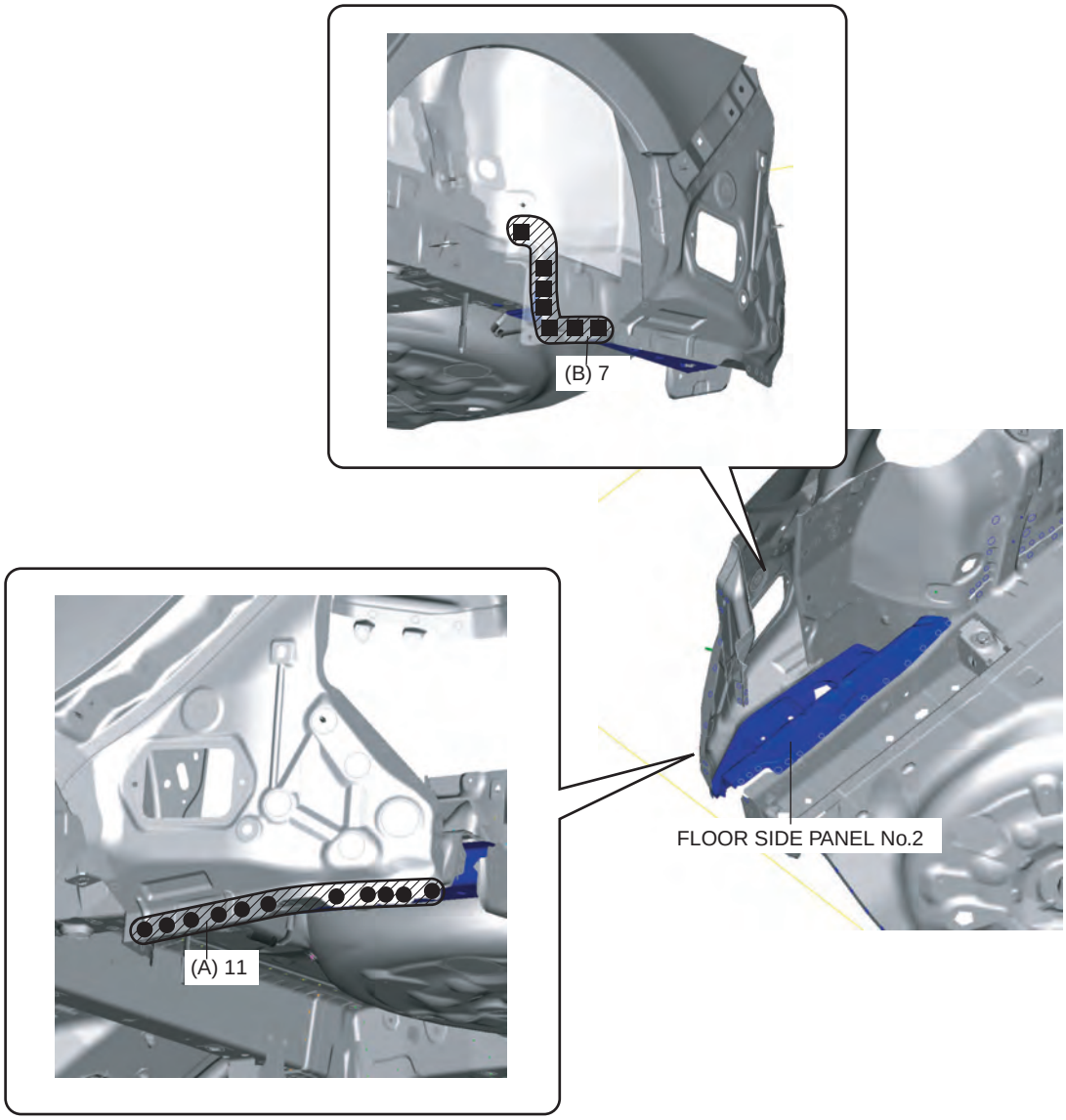

am6zzb0000046

6. Plug weld the 40 locations indicated by (C) shown in the figure, then install the floor side panel No.1.

cardiagn.com

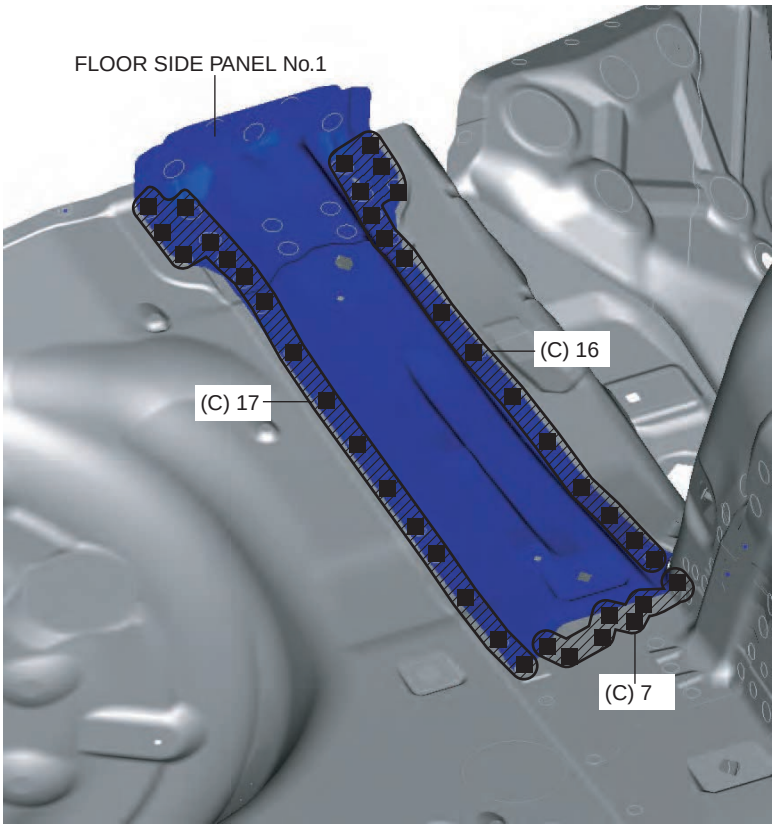

am6zzb0000046

cardiagn.com

TRUNK FLOOR PANEL REMOVAL [PANEL REPLACEMENT]

id098008829500

Symbol Mark

SYMBOL MARK	MEANING
●	SPOT WELDING

am6zzb0000046

Removal Procedure

1. Drill the 94 locations shown in the figure.

Caution

- **When drilling the 94 locations shown in the figure, do not drill a hole all the way through or there could be a problem when installing the new part.**

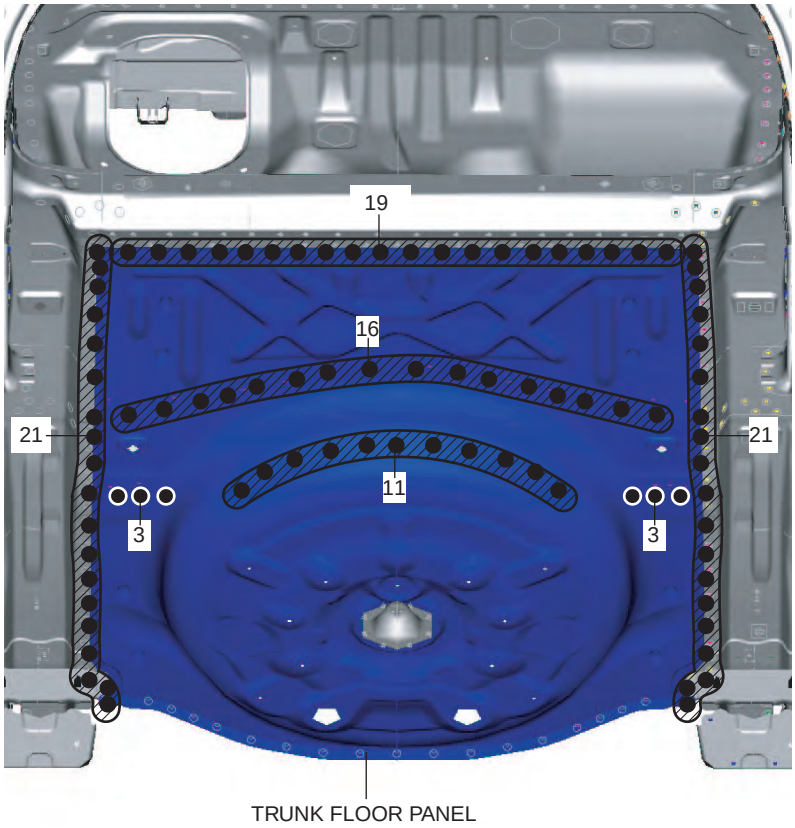

am6zzb0000046

2. Remove the trunk floor panel.

cardiagn.com

TRUNK FLOOR PANEL INSTALLATION [PANEL REPLACEMENT]

id098008829600

Symbol Mark

SYMBOL MARK	MEANING
■	PLUG WELDING (CO_2 ARC WELDING)

am6zzb0000046

Installation Procedure

1. When installing new parts, measure and adjust the body as necessary to conform with standard dimensions.
2. Drill holes for the plug welding before installing the new parts.
3. After temporarily installing new parts, make sure the related parts fit properly.
4. Slide the end of trunk floor panel in the direction of arrow shown in the figure, and then insert it.

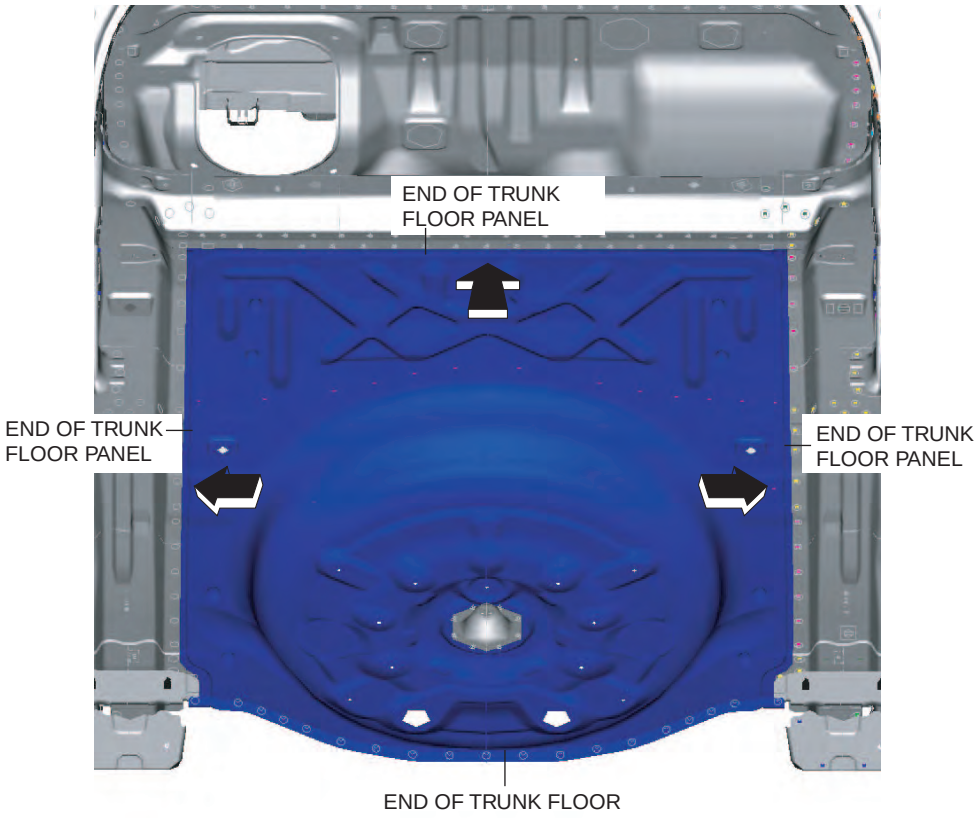

am6zzb0000047

5. Plug weld the 94 locations shown in the figure, then install the trunk floor panel.

cardiagn.com

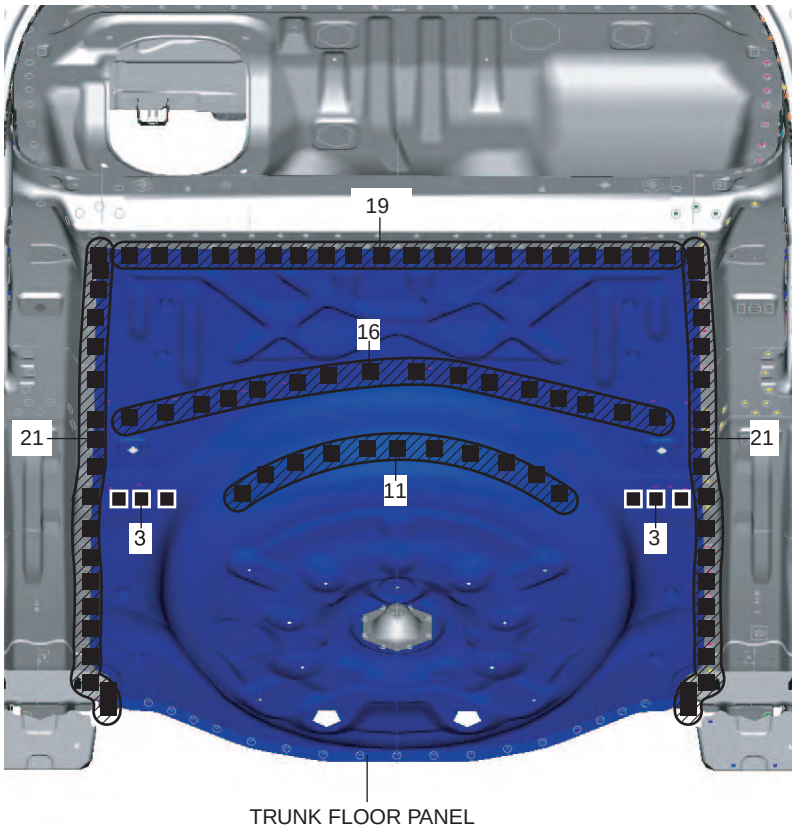

am6zzb0000047

cardiagn.com

REAR SIDE FRAME REMOVAL [PANEL REPLACEMENT]

id098008801200

Symbol Mark

SYMBOL MARK	MEANING
●	SPOT WELDING
⎯⎯⎯⎯⎯⎯⎯⎯⎯⎯⎯⎯⎯⎯⎯⎯⎯⎯⎯⎯	ROUGH CUT LOCATION

am6zzb0000047

Removal Procedure

1. Drill the 40 locations indicated by (A) shown in the figure, then remove the floor side panel No.1.

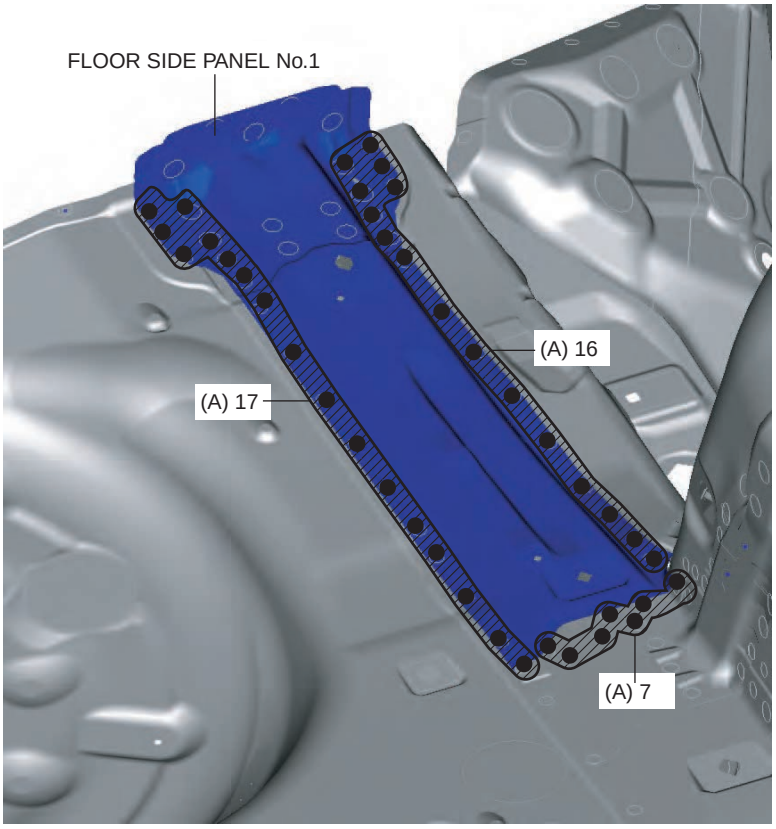

am6zzb0000047

2. Rough cut the location indicated by (B) shown in the figure.

cardiagn.com

3. Drill the 3 locations indicated by (C) shown in the figure, then remove the part of trunk floor panel (shaded arear).

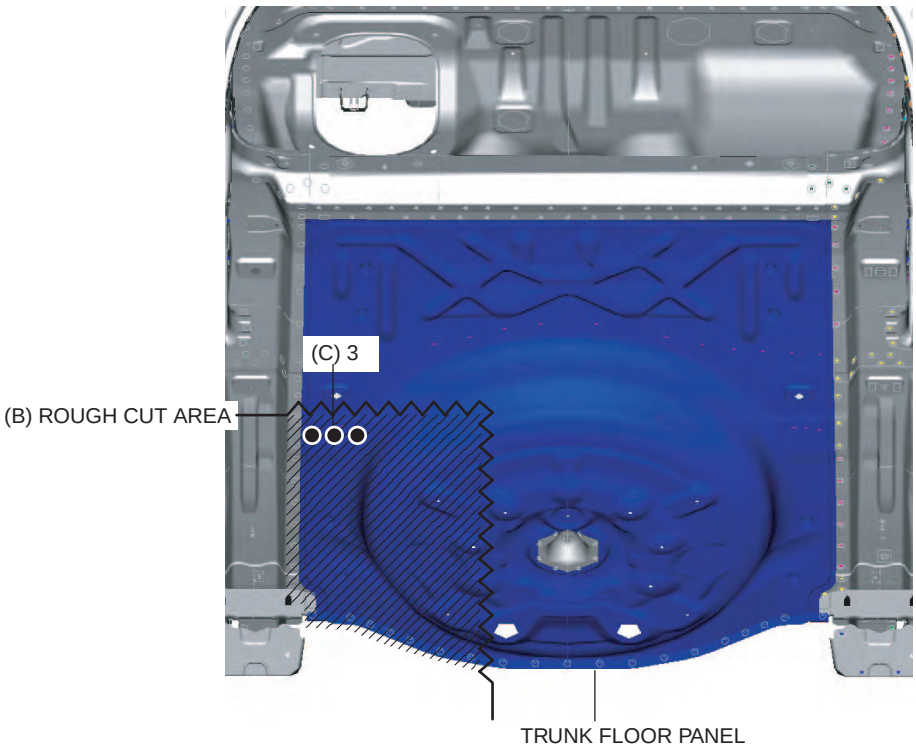

am6zzb0000047

4. Drill the 13 locations indicated by (D) shown in the figure.

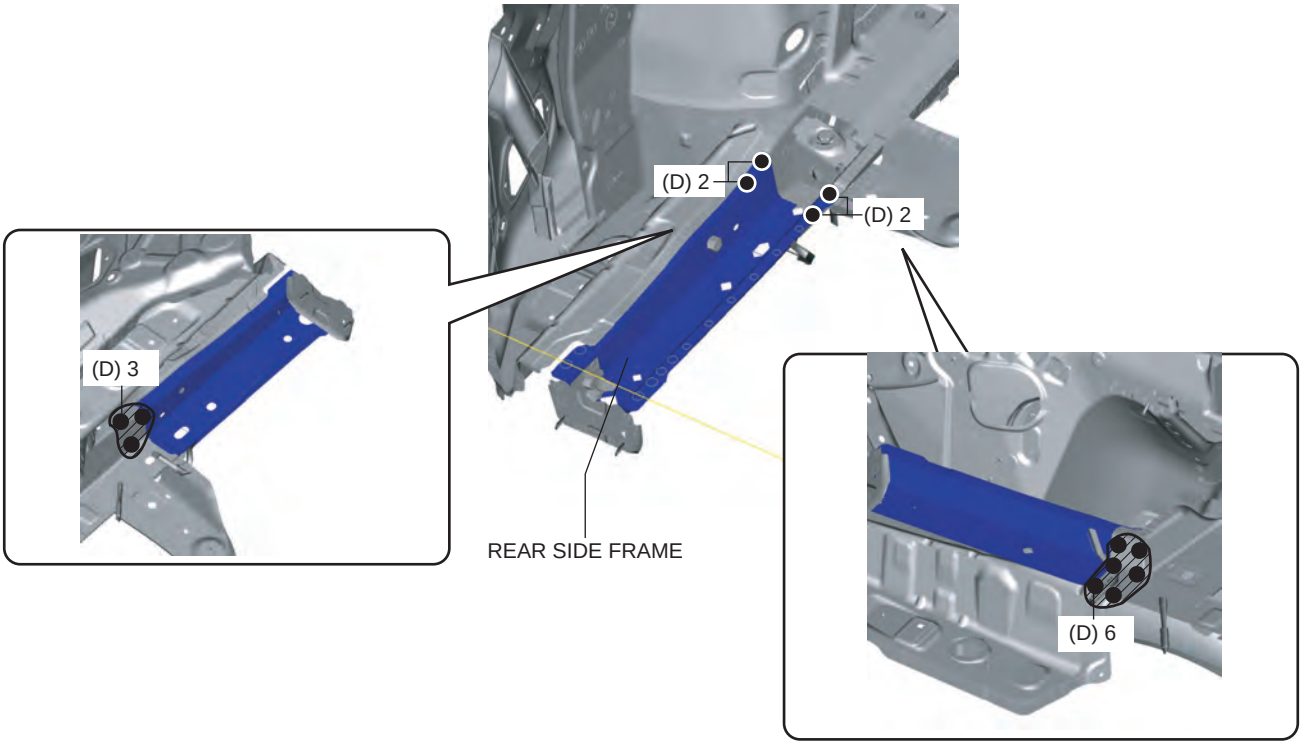

am6zzb0000047

5. Remove the rear side frame.

cardiagn.com

REAR SIDE FRAME INSTALLATION [PANEL REPLACEMENT]

id098008801300

Symbol Mark

SYMBOL MARK	MEANING
■	PLUG WELDING (CO_2 ARC WELDING)
┼┼┼┼┼┼┼┼┼┼┼┼┼┼┼┼┼┼┼┼┼┼┼┼┼┼┼┼┼┼	CONTINUOUS CO_2 ARC WELDING (CUT-AND-JOIN LOCATION)

am6zzb0000047

Installation Procedure

1. When installing new parts, measure and adjust the body as necessary to conform with standard dimensions.
2. Drill holes for the plug welding before installing the new parts.
3. After temporarily installing new parts, make sure the related parts fit properly.
4. Plug weld the 13 locations indicated by (A) shown in the figure, then install the rear side frame.

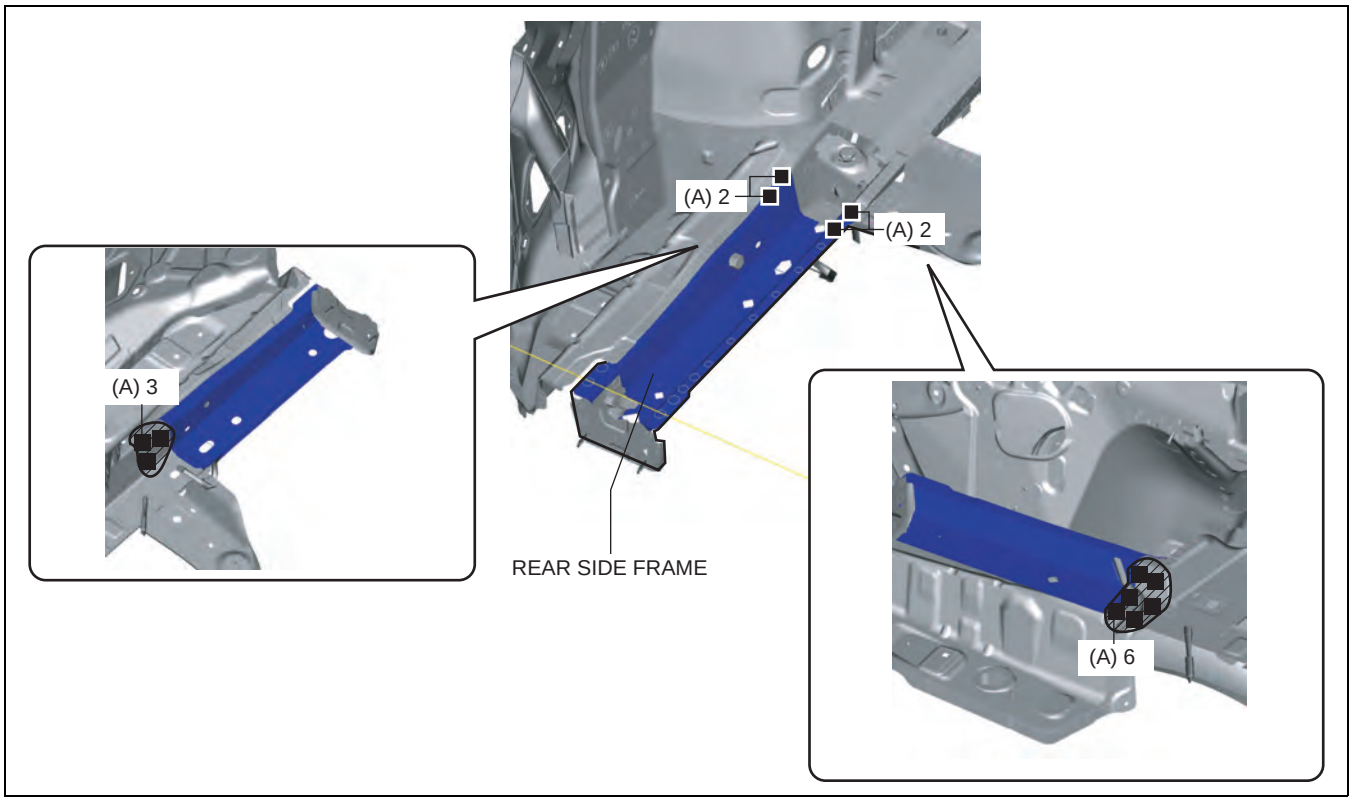

am6zzb0000047

5. Cut and join location indicated by (B) shown in the figure.

cardiagn.com

6. Plug weld the 3 locations indicated by (C) shown in the figure, then install the part of trunk floor panel.

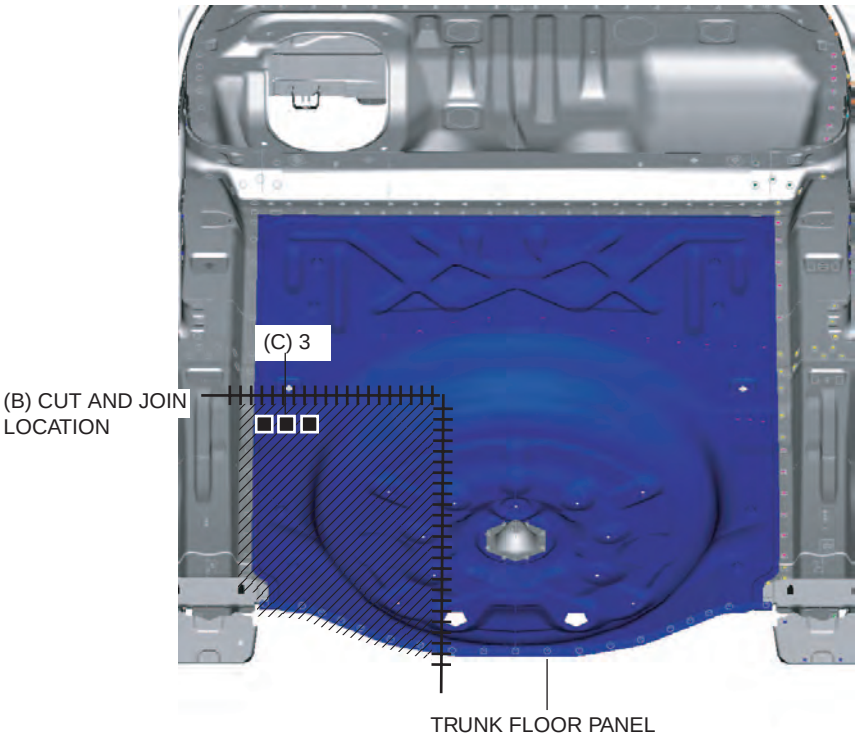

am6zzb0000047

7. Plug weld the 40 locations indicated by (D) shown in the figure, then install the floor side panel No.1.

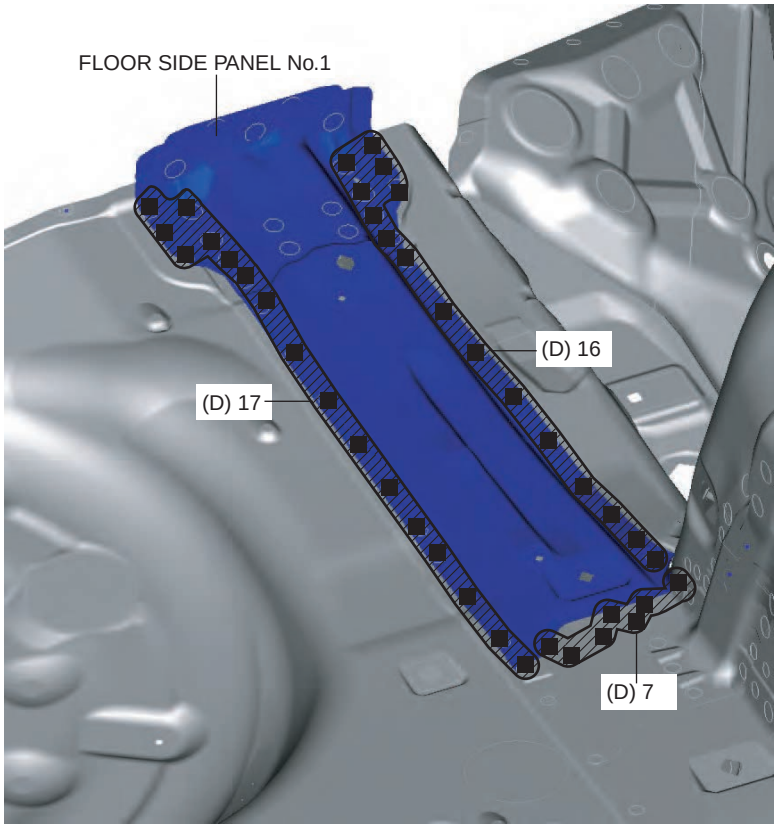

am6zzb0000047

cardiagn.com

ROOF PANEL REMOVAL [PANEL REPLACEMENT]

id098008744300

Symbol Mark

SYMBOL MARK	MEANING
●	SPOT WELDING

am6zzb0000048

Removal Procedure

Caution

- **Remove the curtain air bag module to prevent damage before servicing.**

Front-side

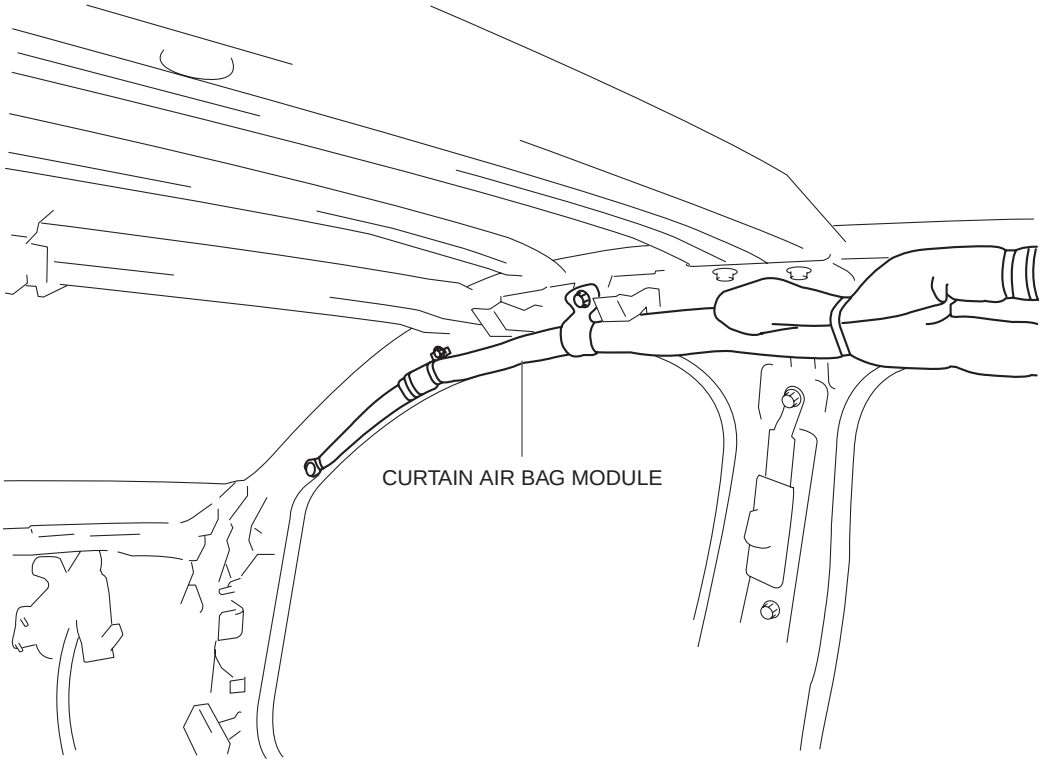

am6xub0000011

Rear-side

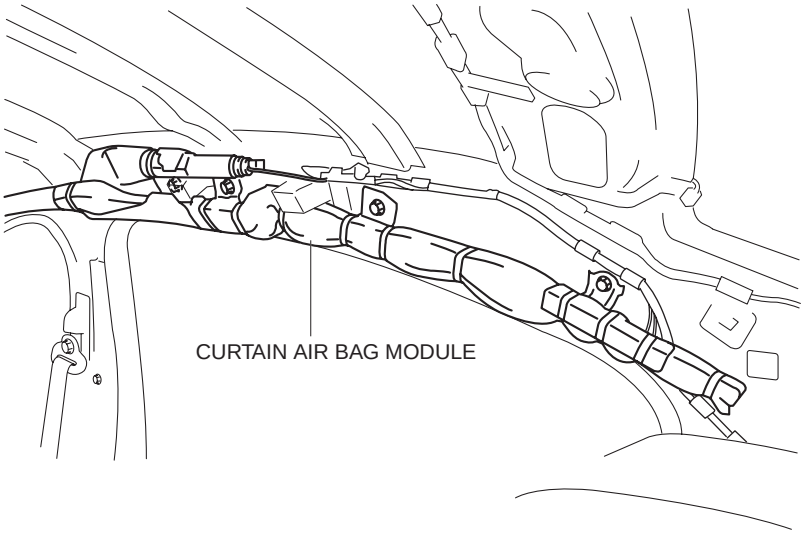

am6xub0000011

cardiagn.com

1. Drill the 82 locations shown in the figure.

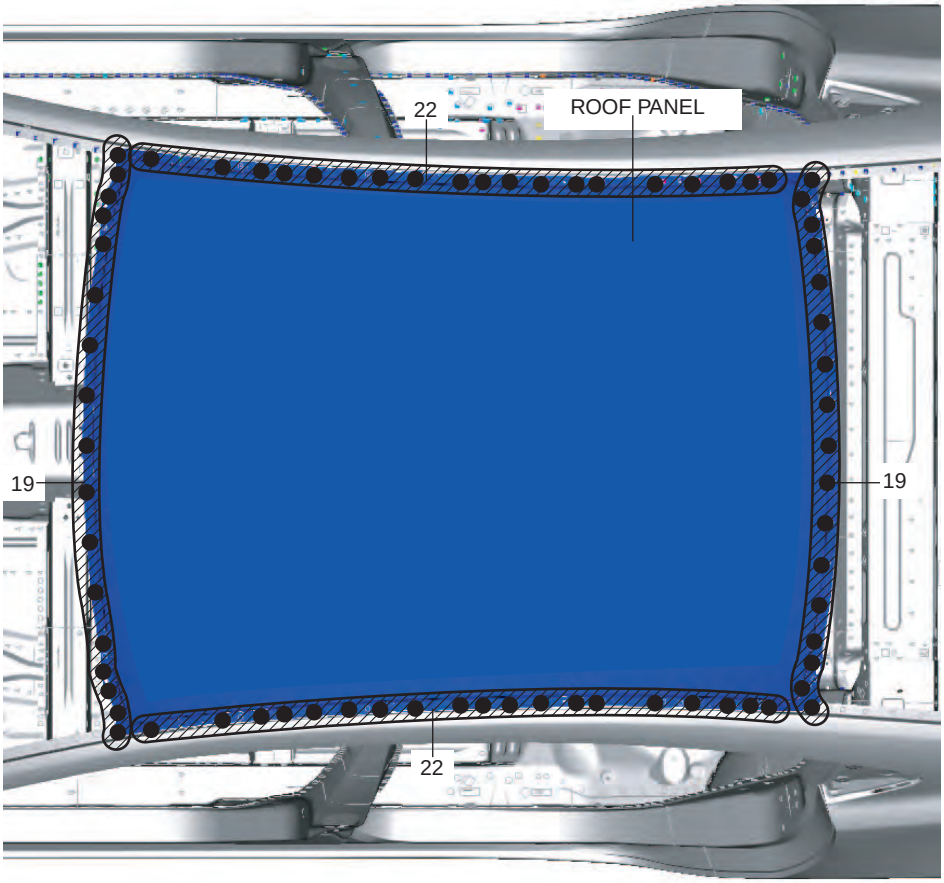

am6zzb0000048

2. Remove the roof panel.

cardiagn.com

ROOF PANEL INSTALLATION [PANEL REPLACEMENT]

id098008744400

Symbol Mark

SYMBOL MARK	MEANING
●	SPOT WELDING
■	PLUG WELDING (CO_2 ARC WELDING)

am6zzb0000048

Installation Procedure

1. When installing new parts, measure and adjust the body as necessary to conform with standard dimensions.
2. Drill holes for the plug welding before installing the new parts.
3. After temporarily installing new parts, make sure the related parts fit properly.
4. Apply the body sealer to the position shown in the figure.

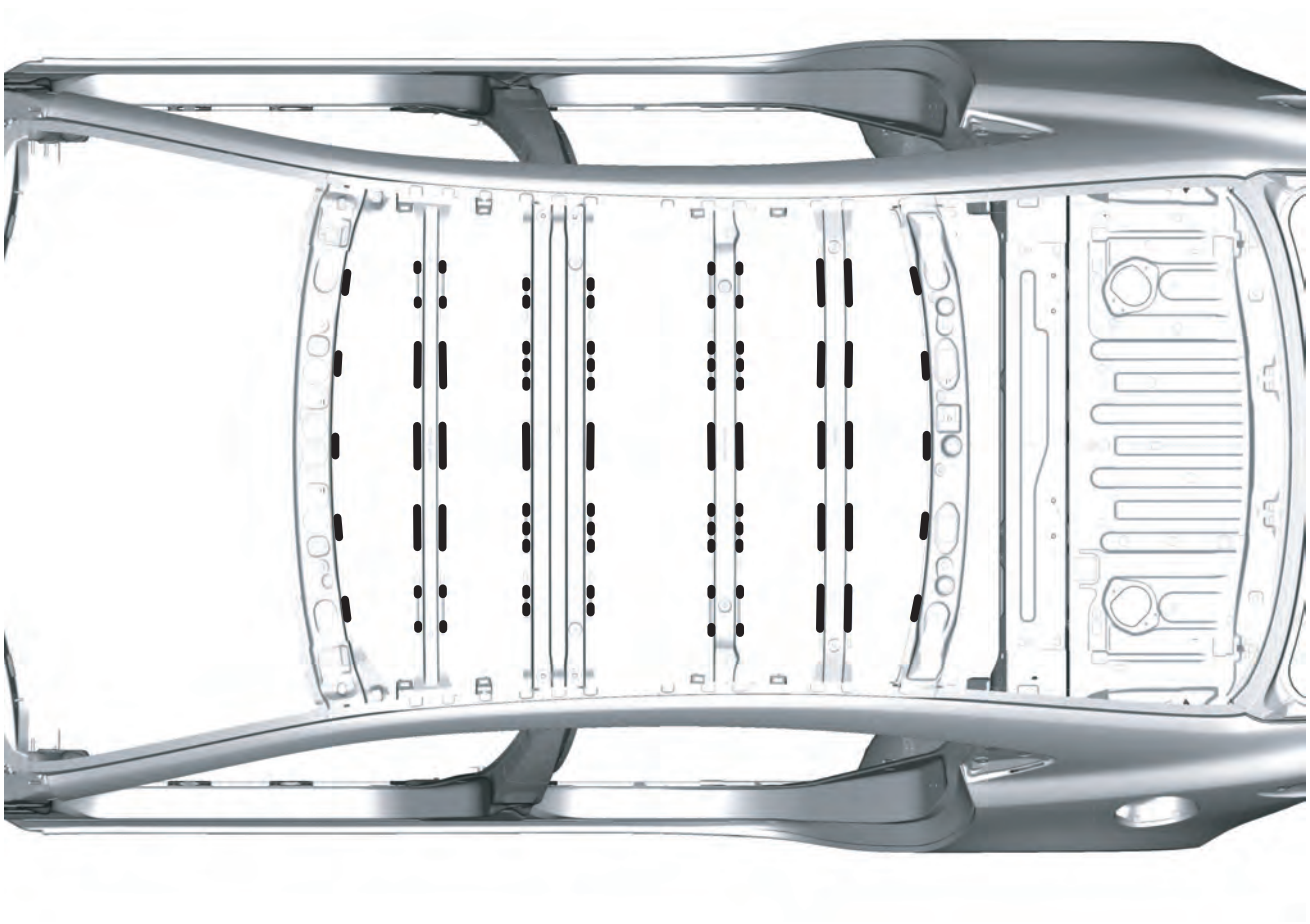

: BODY SEALER

am6zzb0000048

5. Plug weld the 44 locations indicated by (A) shown in the figure.

cardiagn.com

6. Spot weld the 38 locations indicated by (B) shown in the figure, then install the roof panel.

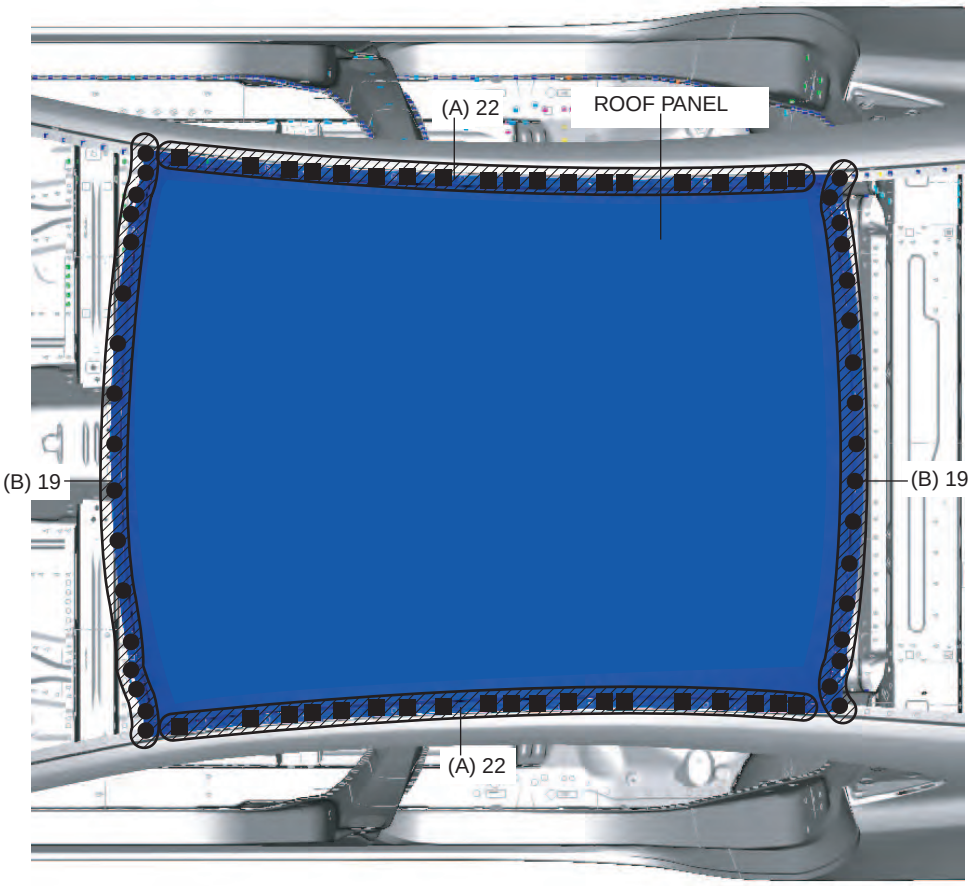

am6zzb0000048

cardiagn.com

09-80C BODY STRUCTURE [WATER-PROOF AND RUST PREVENTIVE]

BODY SEALING [WATER-PROOF AND RUST PREVENTIVE] 09-80C–1
UNDER COATING [WATER-PROOF AND RUST PREVENTIVE] 09-80C–5
CHIPPING-RESISTANT COATING [WATER-PROOF AND RUST PREVENTIVE] 09-80C–5
RUST PREVENTIVE TREATMENT [WATER-PROOF AND RUST PREVENTIVE] 09-80C–6
DUMPING SHEET REPLACEMENT [WATER-PROOF AND RUST PREVENTIVE] 09-80C–7

BODY SEALING [WATER-PROOF AND RUST PREVENTIVE]

id098009739800

- Sealant is applied to the parts where the panels meet and to the hemmed parts of the door panel and hood panel to provide water proofing and rust proofing.

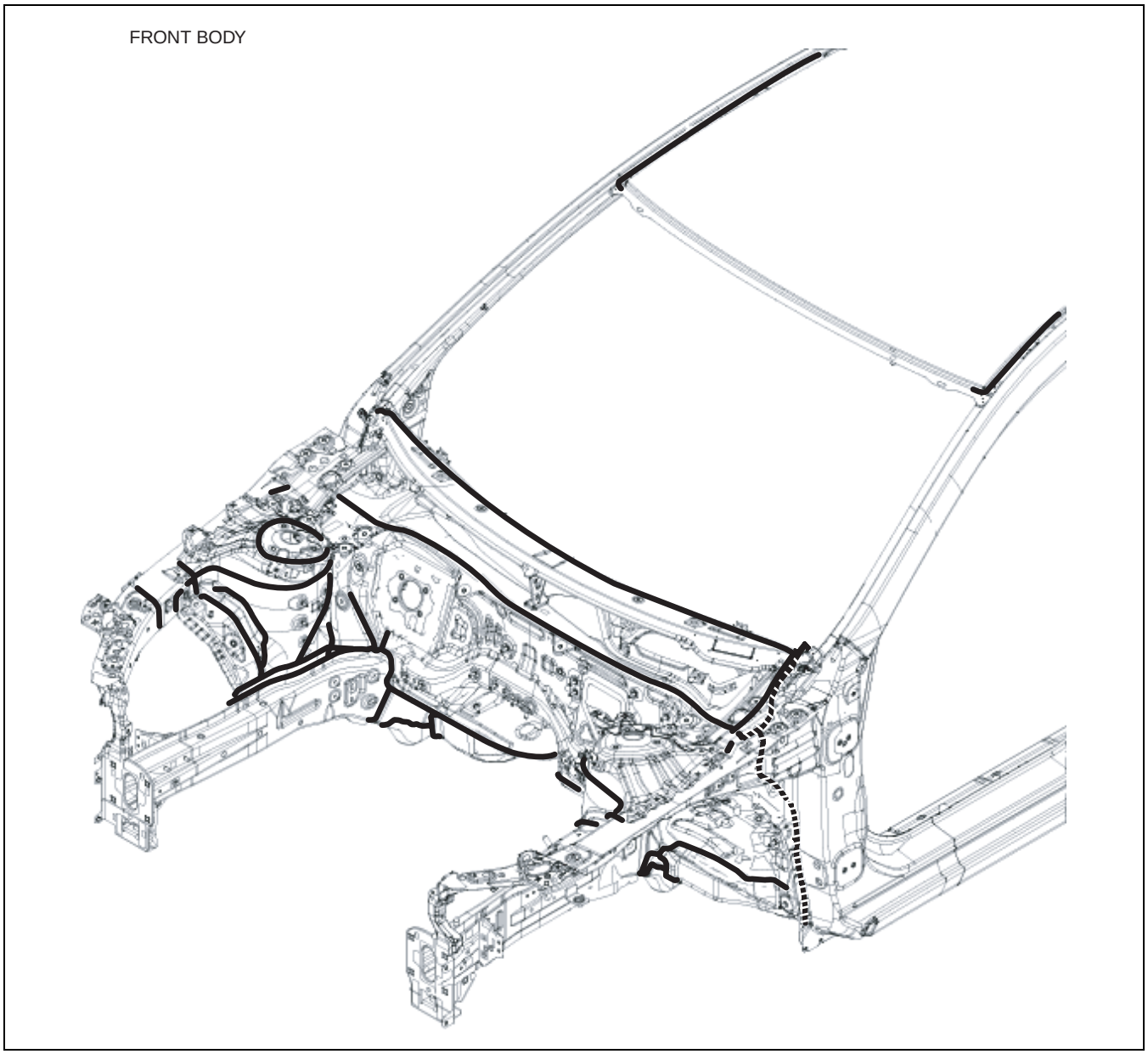

am6zzb0000049

cardiagn.com

ROOM

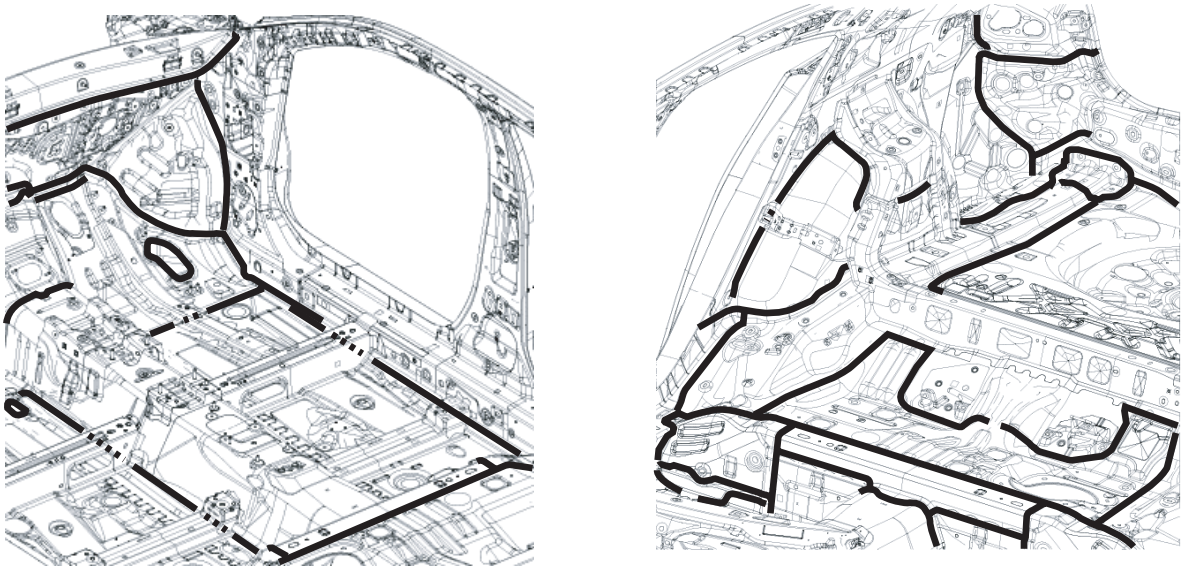

am6zzb0000049

REAR BODY

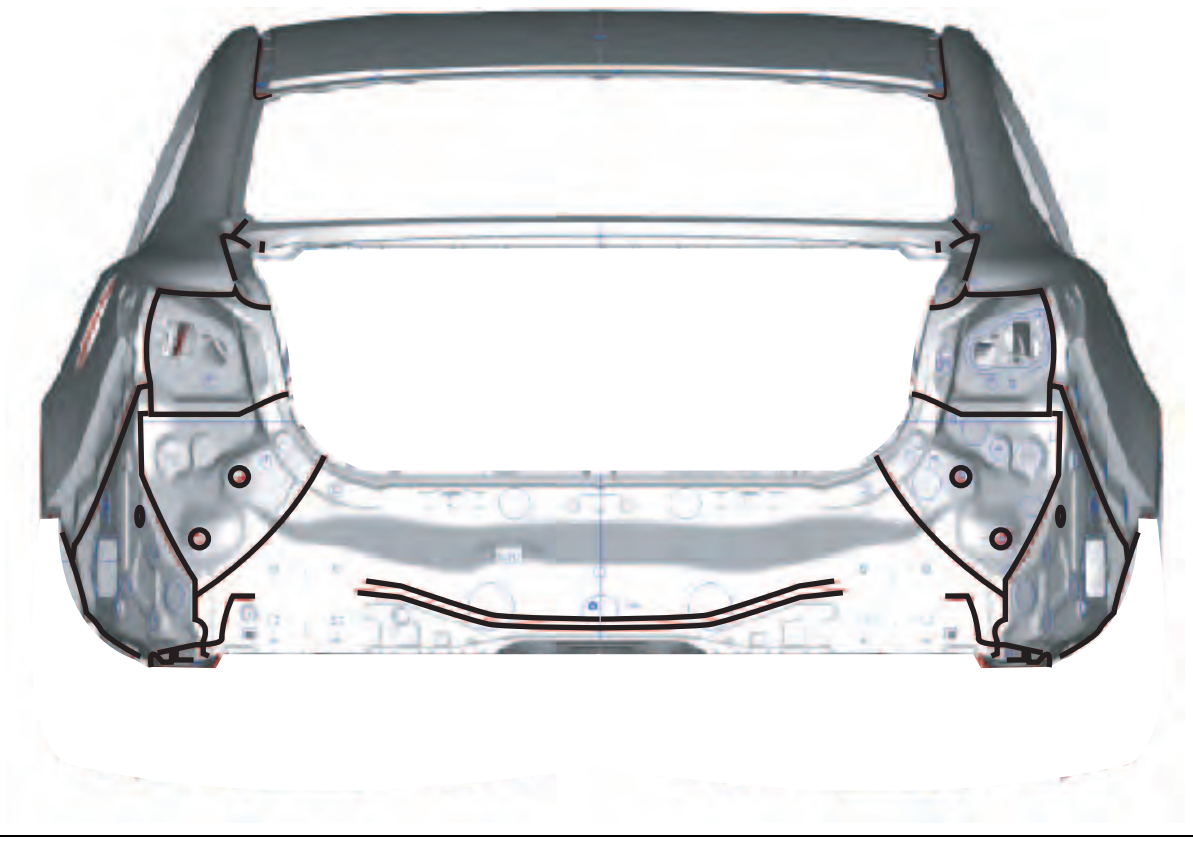

am6zzb0000049

cardiagn.com

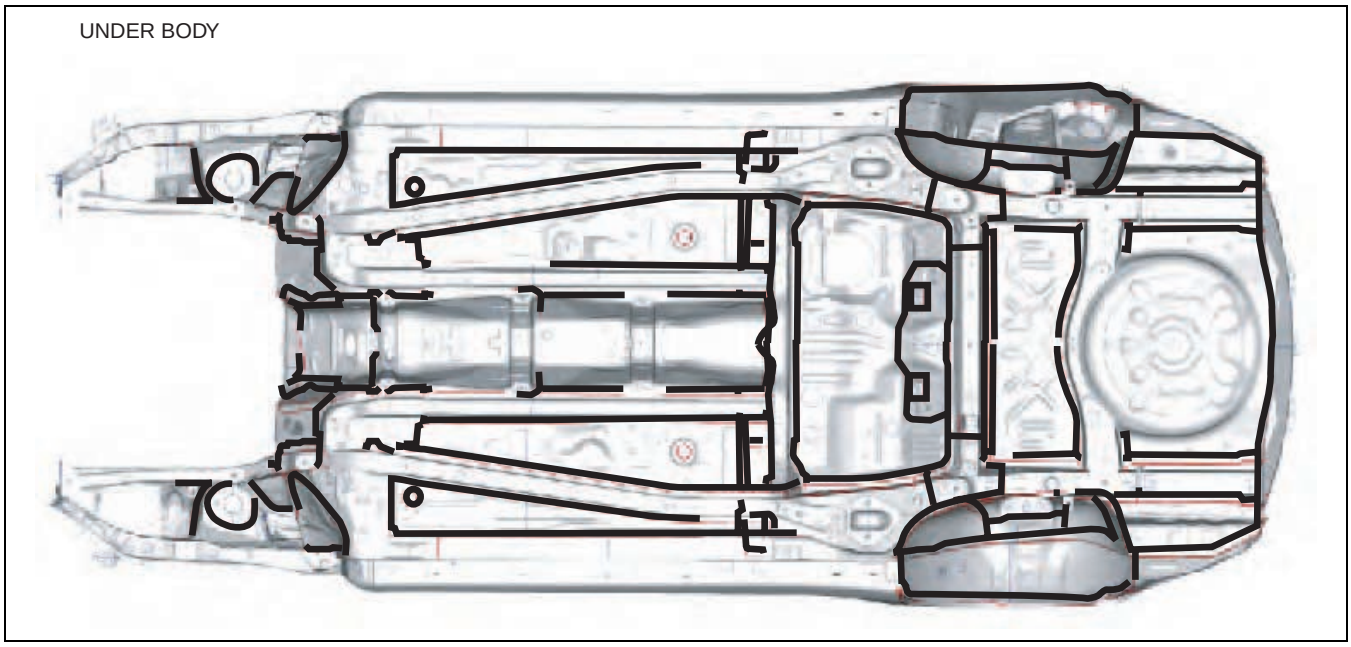

am6zzb0000049

cardiagn.com

HOOD

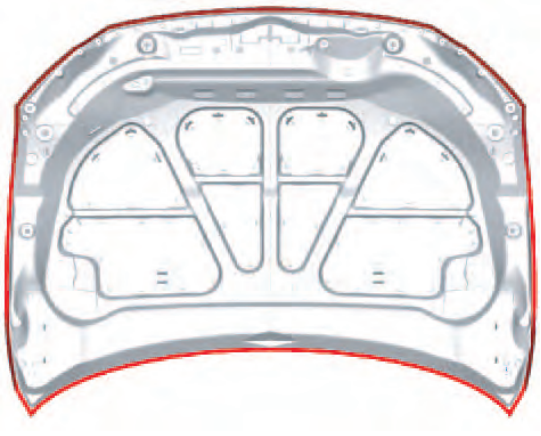

DOOR

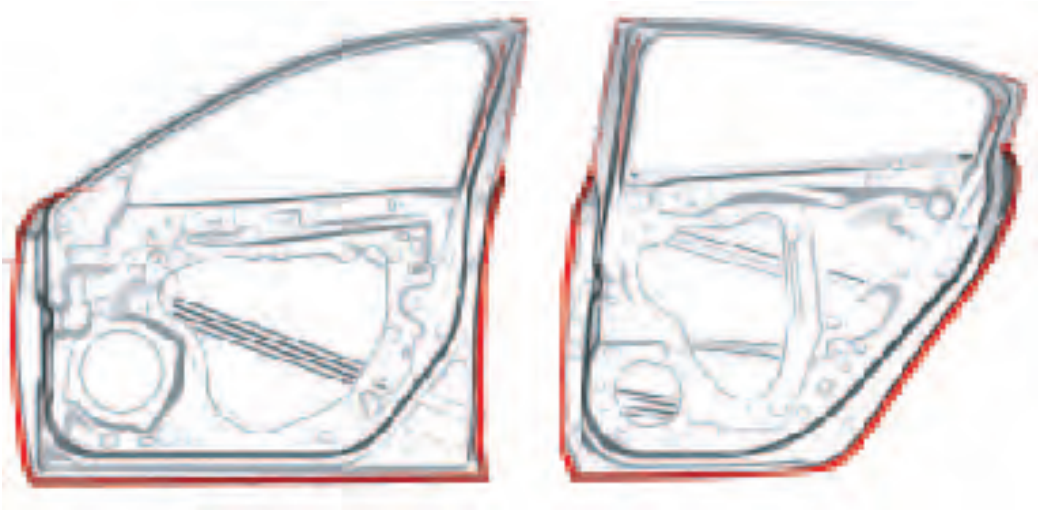

TRUNK LID

am6xub0000011

cardiagn.com

UNDER COATING [WATER-PROOF AND RUST PREVENTIVE]

id098009739900

- The shaded areas indicated under body locations that are undercoated to prevent noise and rusting.

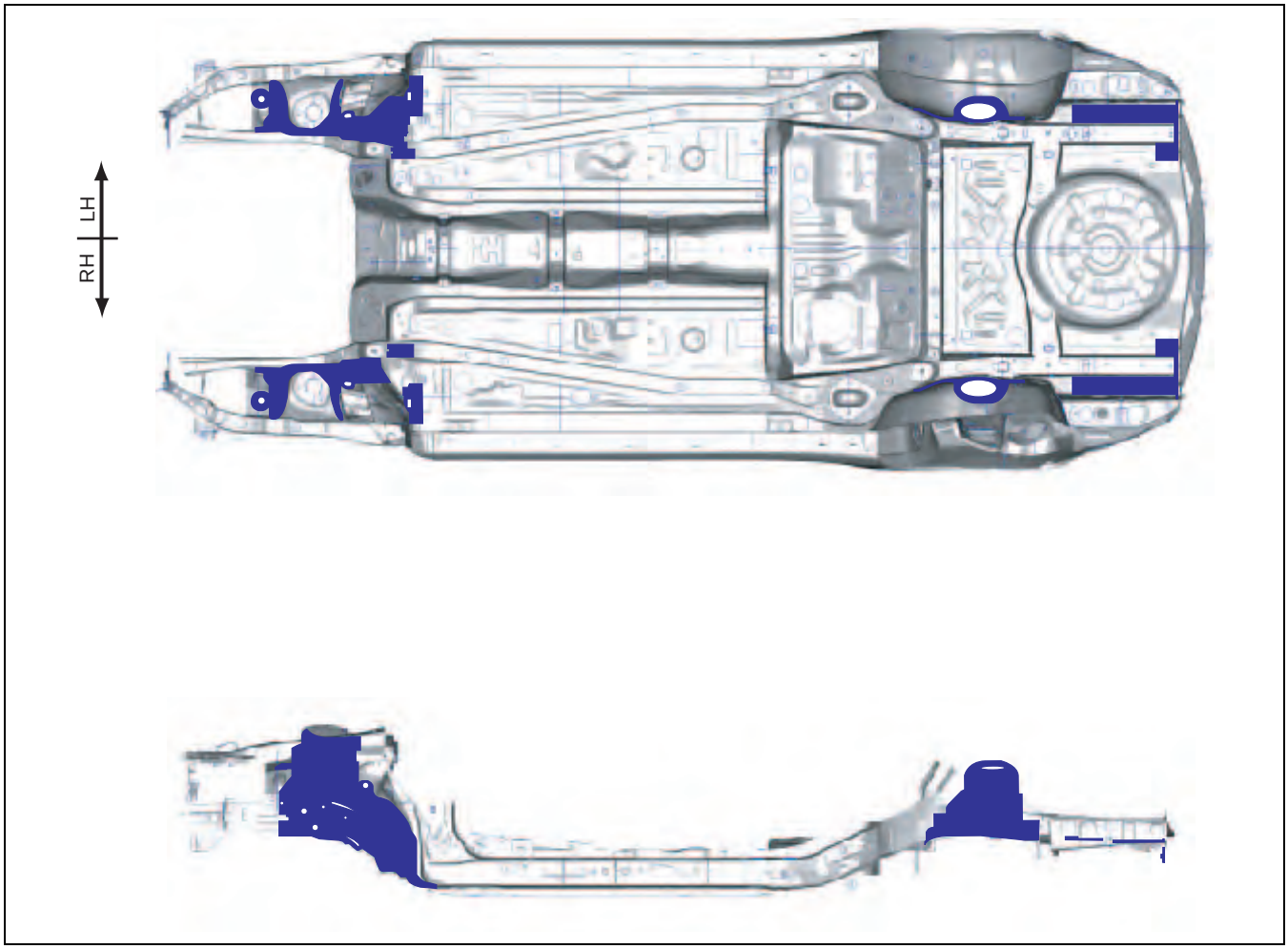

aatjjb00000333

CHIPPING-RESISTANT COATING [WATER-PROOF AND RUST PREVENTIVE]

id098009740000

- The coating locations are indicated by the shaded areas.

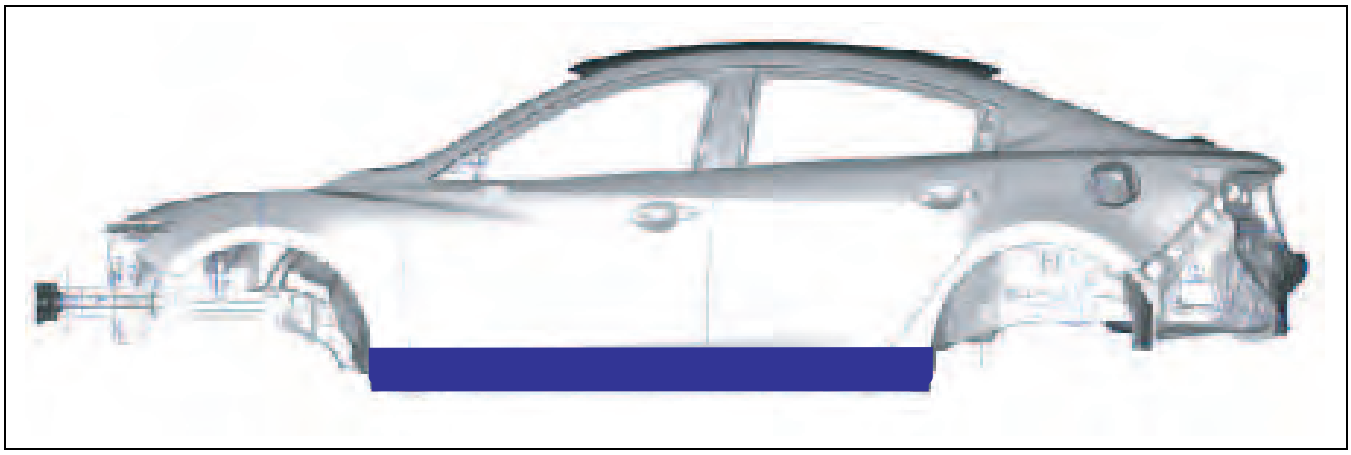

aatjjb00000335

cardiagn.com

RUST PREVENTIVE TREATMENT [WATER-PROOF AND RUST PREVENTIVE]

id098009740100

HOOD

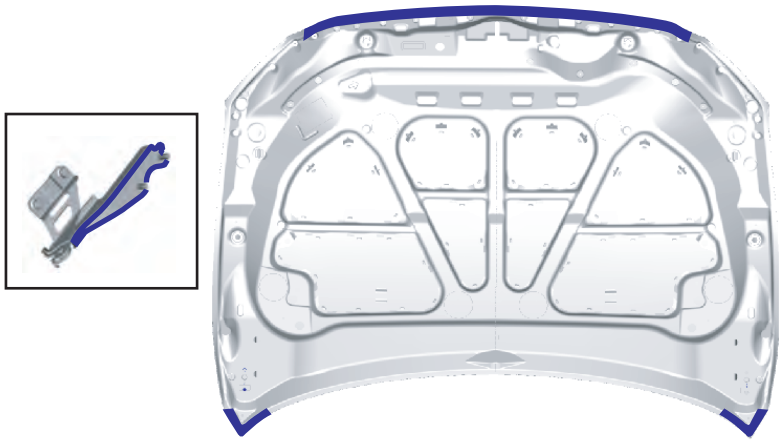

DOOR

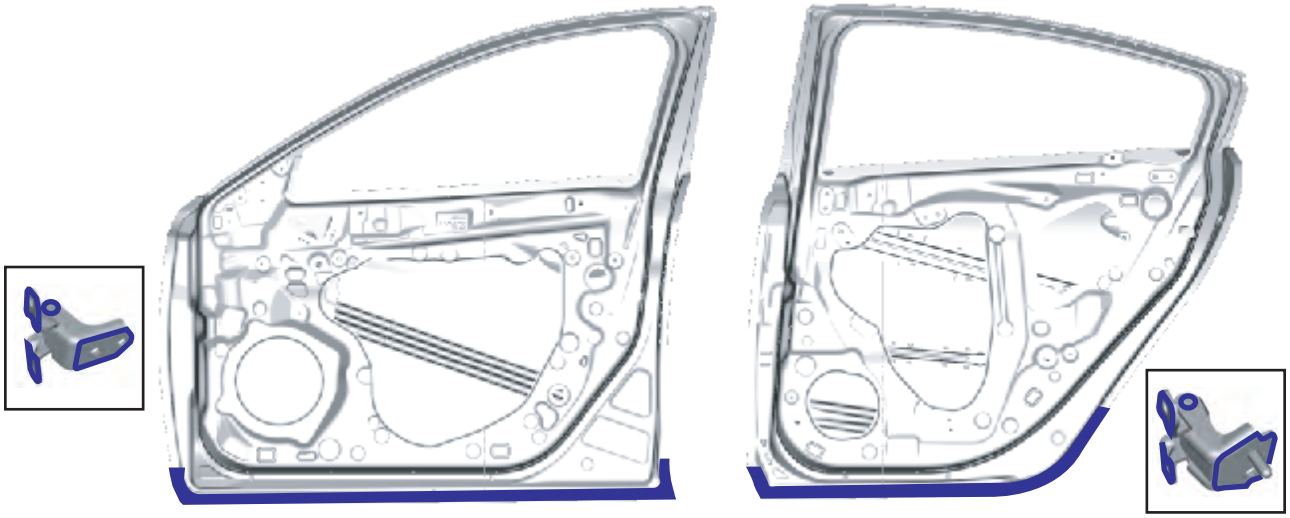

TRUNK LID

am6xub0000011

cardiagn.com

DUMPING SHEET REPLACEMENT [WATER-PROOF AND RUST PREVENTIVE]

id098009745700

- After repairing the body, attach the dumping sheet to the location shown in the figure for noise insulation.

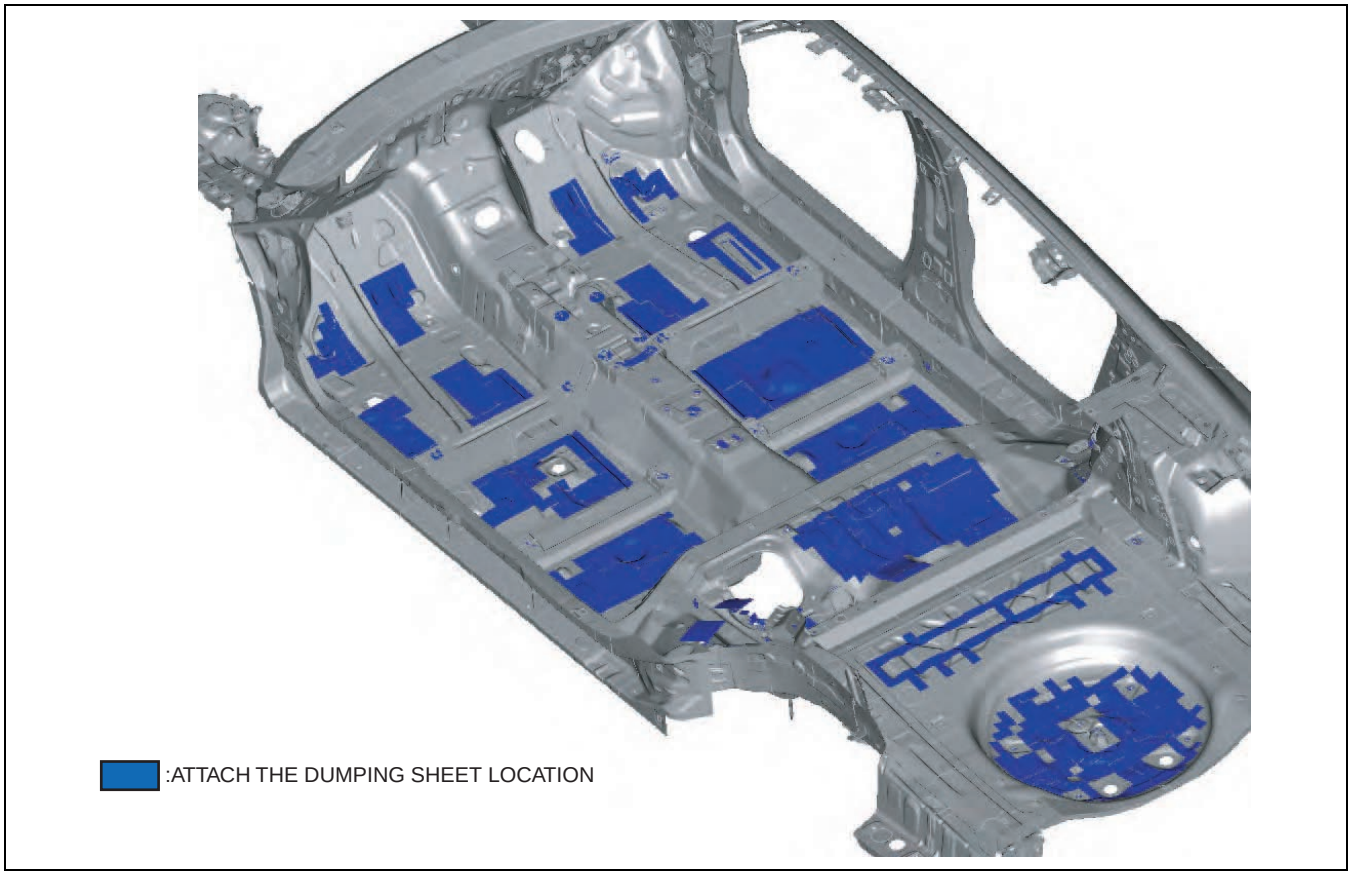

am6zzb0000050

cardiagn.com

cardiagn.com

09-80D BODY STRUCTURE [DIMENSIONS]

UNDERBODY DIMENSIONS [DIMENSIONS] 09-80D–2
FRONT WHEEL ALIGNMENT [DIMENSIONS] 09-80D–3
Steering Angle Adjustment 09-80D–4
Total Toe-in Adjustment 09-80D–4
REAR WHEEL ALIGNMENT [DIMENSIONS] 09-80D–5
Total Toe-in Adjustment 09-80D–5
FRONT BODY DIMENSIONS (1) [DIMENSIONS] 09-80D–6
FRONT BODY DIMENSIONS (2) [DIMENSIONS] 09-80D–7
CABIN SIDE FRAME DIMENSIONS [DIMENSIONS] 09-80D–9
ROOM DIMENSIONS (1) [DIMENSIONS] 09-80D–11
ROOM DIMENSIONS (2) [DIMENSIONS] 09-80D–13
ROOM DIMENSIONS (3) [DIMENSIONS] 09-80D–14
REAR BODY DIMENSIONS [DIMENSIONS] 09-80D–15

cardiagn.com

UNDERBODY DIMENSIONS [DIMENSIONS]

id098010990000

- The following figures are bottom and side views.

STRAIGHT-LINE DIMENSIONS

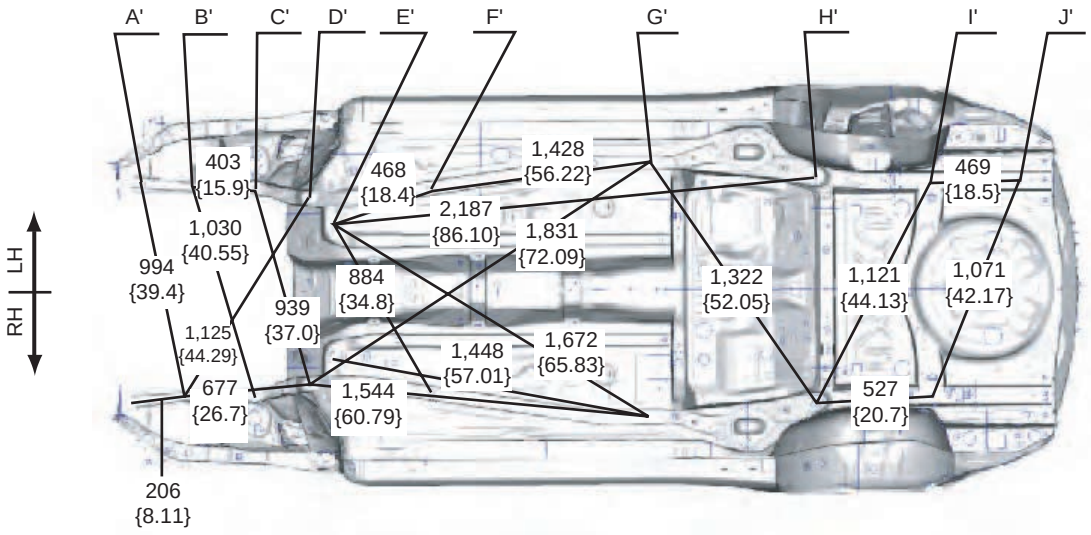

FLAT-PLANE DIMENSIONS

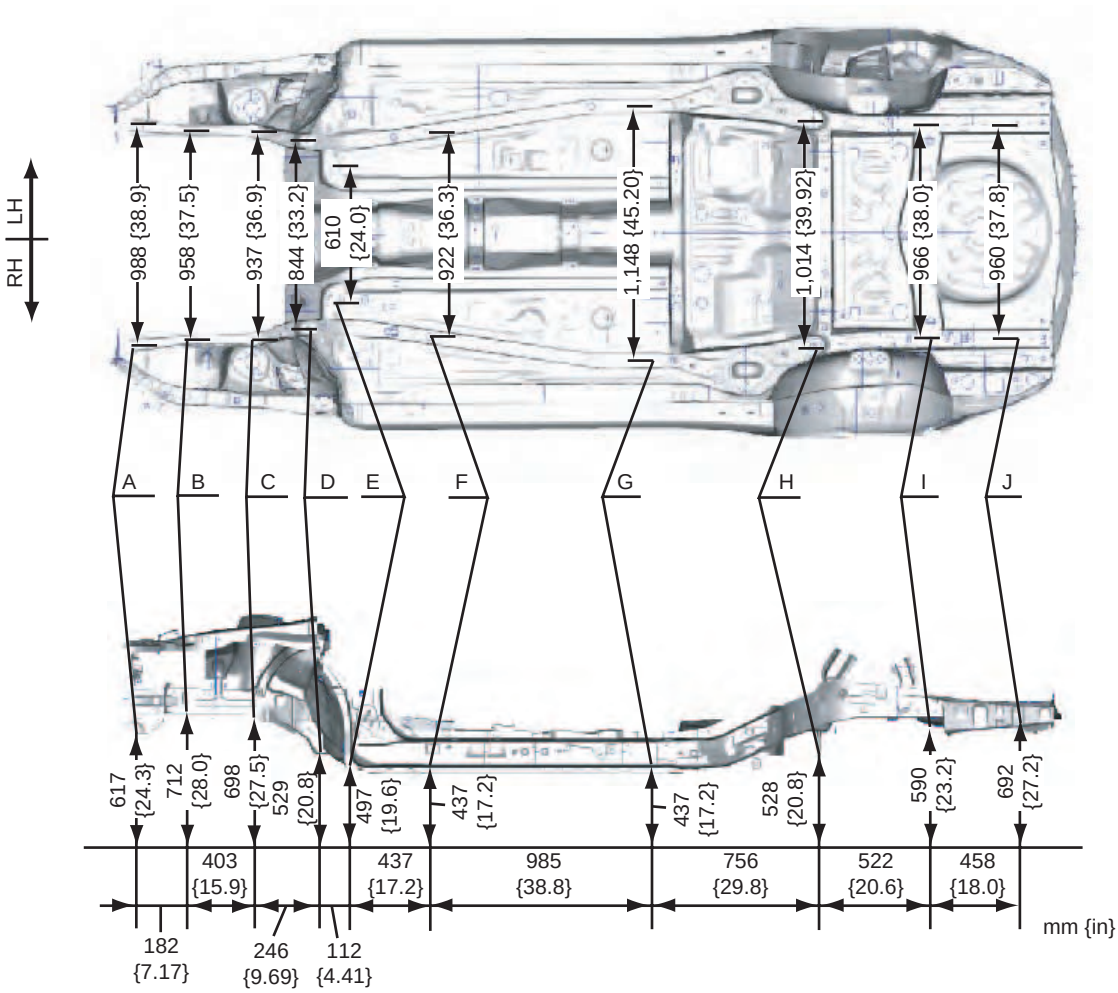

am6zzb0000050

cardiagn.com

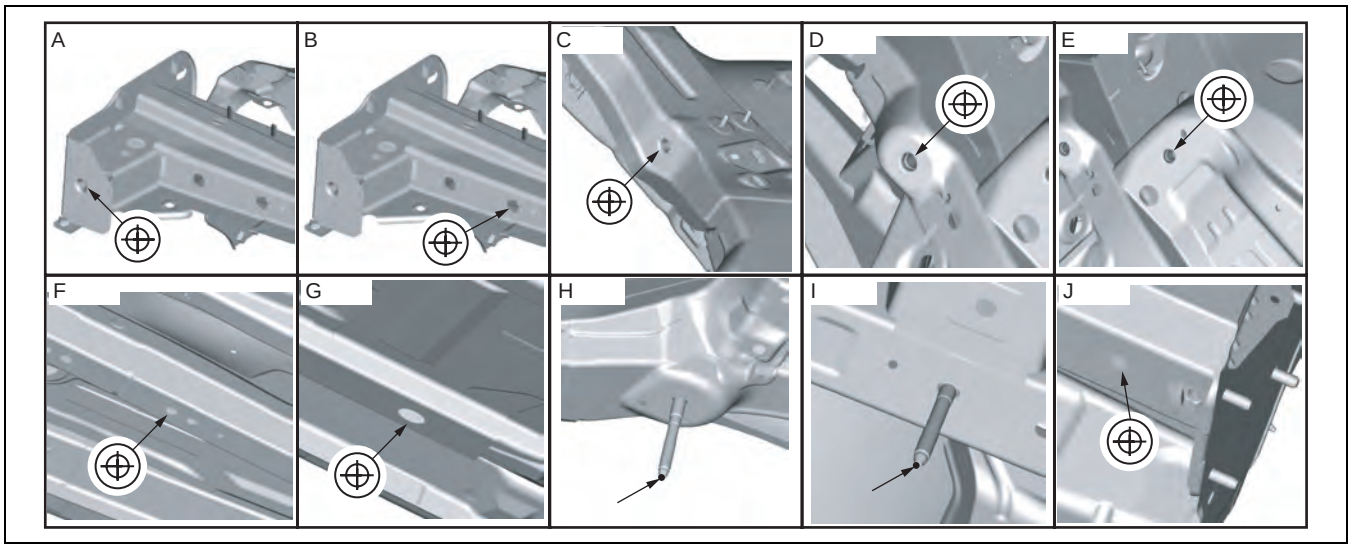

aatjjb00000284

Point symbol	Designation	Hole diameter or bolt or nut size (mm {in})
A	Front crossmember installation hole	ϕ20 {0.79}
B	Front side frame datum hole	ϕ16 {0.63}
C	Front crossmember installation hole	ϕ22.5 {0.886}
D	Front crossmember installation hole	ϕ19 {0.75}
E	Front crossmember installation hole	ϕ22 {0.87}

Point symbol	Designation	Hole diameter or bolt or nut size (mm {in})
F	Front B frame datum hole	ϕ16 {0.63}
G	Front B frame datum hole	ϕ25 {0.98}
H	Rear crossmember installation bolt	M12
I	Rear crossmember installation bolt	M12
J	Rear side frame datum hole	ϕ16 {0.63}

FRONT WHEEL ALIGNMENT [DIMENSIONS]

id098010898900

Front wheel alignment (Unloaded)*1

Item			Fuel gauge indication				
			Empty	1/4	1/2	3/4	Full
Maximum steering angle [Tolerance ±3°]		Inner	38°36′				
		Outer	31°54′				
Total toe-in	Tire [Tolerance ±4 {0.2}]	(mm {in})	2 {0.08}				
	Rim inner [Tolerance ±3 {0.1}]		1.0 {0.04}				
		(degree)	0°10′±0°20′				
Caster angle*2 (Reference value) [Tolerance ±1°]			6°08′	6°11′	6°13′	6°15′	6°17′
Camber angle*2 (Reference value) [Tolerance ±1°]			-0°17′	-0°17′	-0°18′	-0°18′	-0°19′
Steering axis inclination (Reference value)			15°07′	15°08′	15°09′	15°09′	15°10′

***1 : Engine coolant and engine oil are at specified level. Spare tire, jack and tools are in designated position.**
***2 : Difference between left and right must not exceed 1°30′.**

cardiagn.com

Steering Angle Adjustment

1. Loosen the tie-rod end locknuts.
2. Remove the steering gear boot clamp.
3. Turn the tie rods.

   Standard length L
   17.7—30.7 mm {0.70—1.20 in}

4. Turn the tie rods equally to provide the correct maximum steering angle.
5. Tighten the tie-rod end locknuts.

   Tightening torque
   69—98 N·m {7.1—9.9 kgf·m, 51—72 ft·lbf}

6. Verify that the boot is not twisted, and install the boot clamp.
7. Adjust the toe-in after adjusting the steering angle.

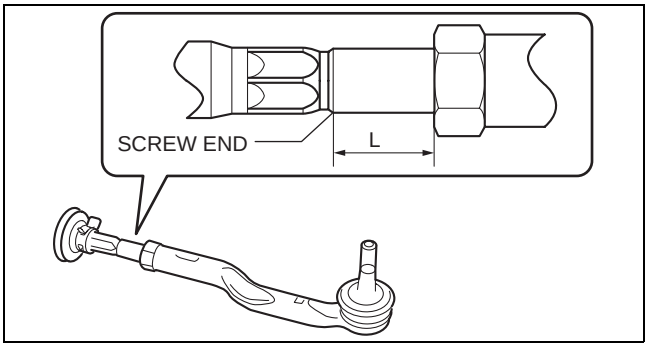

am6zzw0000945

Total Toe-in Adjustment

1. Loosen the locknut of the tie-rod end.
2. Remove the rack boot clamp.
3. Adjust the total toe-in by rotating each tie rod (left and right) in the opposite directions by the same amount respectively.

   Note
   - If toe-in is measured at the tires, the change on one wheel is **approx. 7 mm {0.3 in}** per one rotation of the tie rod.
   - Each tie rod has a right-hand thread. When increasing the toe-in angle, rotate the right tie rod toward the front of the vehicle and rotate the left tie rod toward the rear of the vehicle by the same amount.

4. Tighten the locknut of the tie-rod end.

   Tightening torque
   69—98 N·m {7.1—9.9 kgf·m, 51—72 ft·lbf}

5. Verify that the rack boot does not have any twisting and install the rack boot clamp.

cardiagn.com

REAR WHEEL ALIGNMENT [DIMENSIONS]

id098010899000

Rear wheel alignment (Unloaded)*1

Item			Fuel gauge indication				
			Empty	1/4	1/2	3/4	Full
Total toe-in	Tire [Tolerance ±4 {0.2}]	(mm {in})	2 {0.08}				
	Rim inner [Tolerance ±3 {0.1}]		1.0 {0.04}				
		(degree)	0°10′±0°20′				
Camber angle*2 (Reference value) [Tolerance ±1°]			-0°53′	-0°56′	-0°58′	-1°00′	-1°03′
Thrust angle (Reference value) [Tolerance ±0°48′]			0°00′				

***1 : Engine coolant and engine oil are at specified level. Spare tire, jack and tools are in designated position.**
***2 : Difference between left and right must not exceed 1°30′.**

Total Toe-in Adjustment

1. Loosen the installation nut of the adjusting cam bolt.
2. Rotate the adjusting cam bolt in either direction to adjust the toe-in.

	Left wheel	Right wheel
Toe-out direction	Clockwise	Counterclockwise
Toe-in direction	Counterclockwise	Clockwise

3. Tighten the nut.

Tightening torque
84—101 N·m {8.6—10 kgf·m, 62—74 ft·lbf}

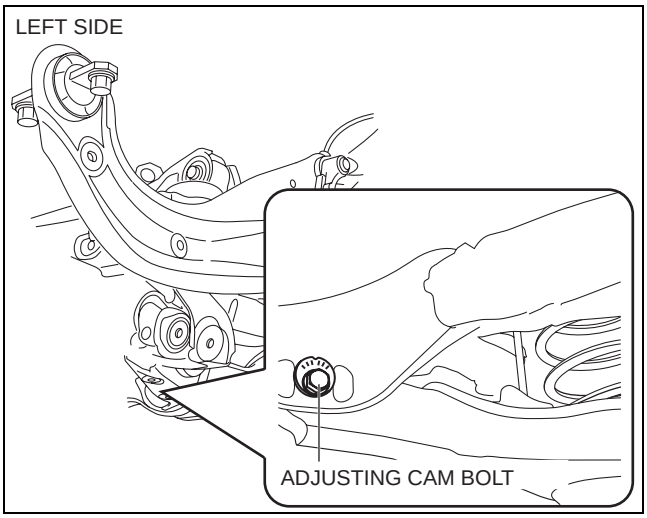

ac5wzw0000245

cardiagn.com

FRONT BODY DIMENSIONS (1) [DIMENSIONS]

id098010990100

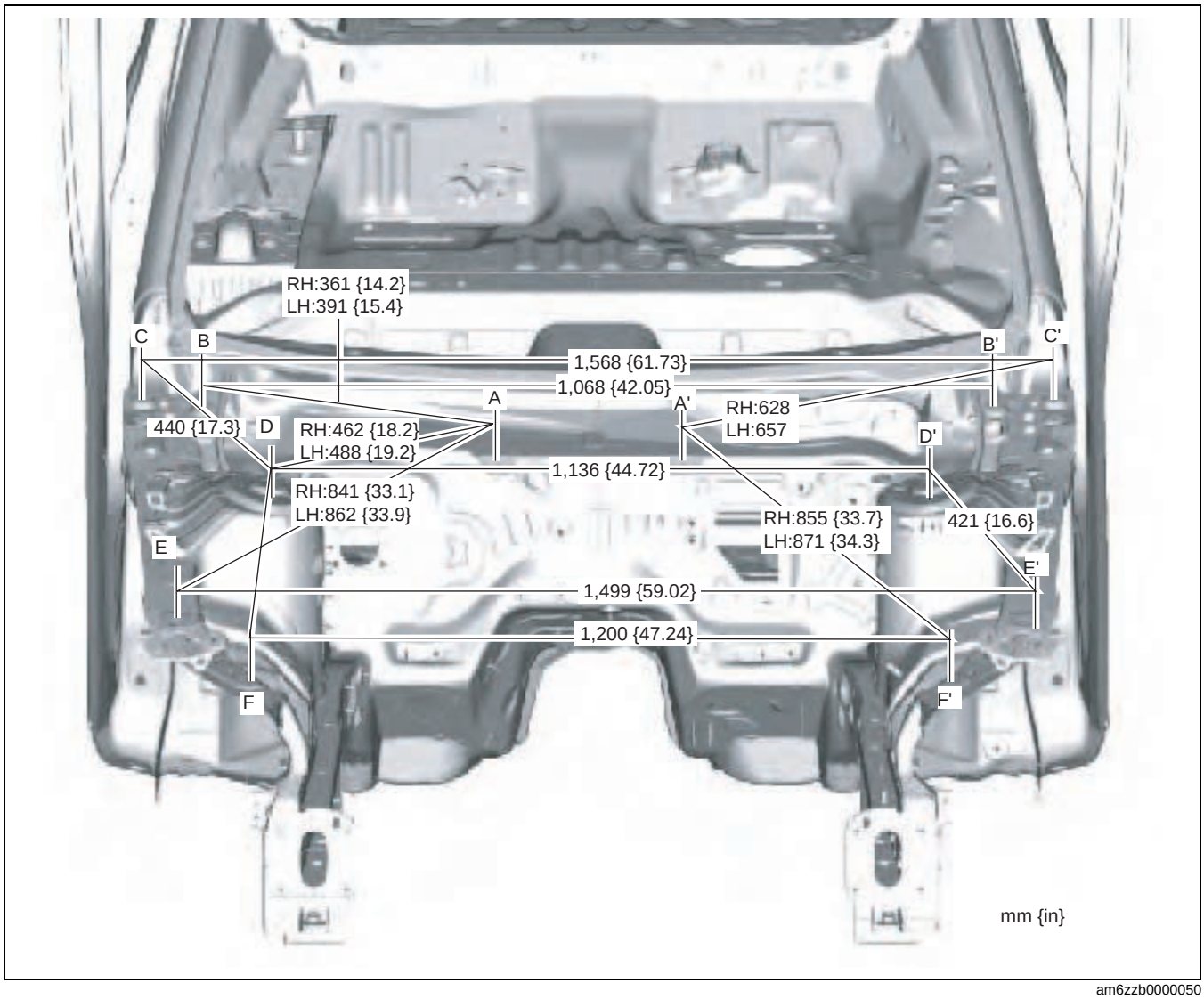

am6zzb0000050

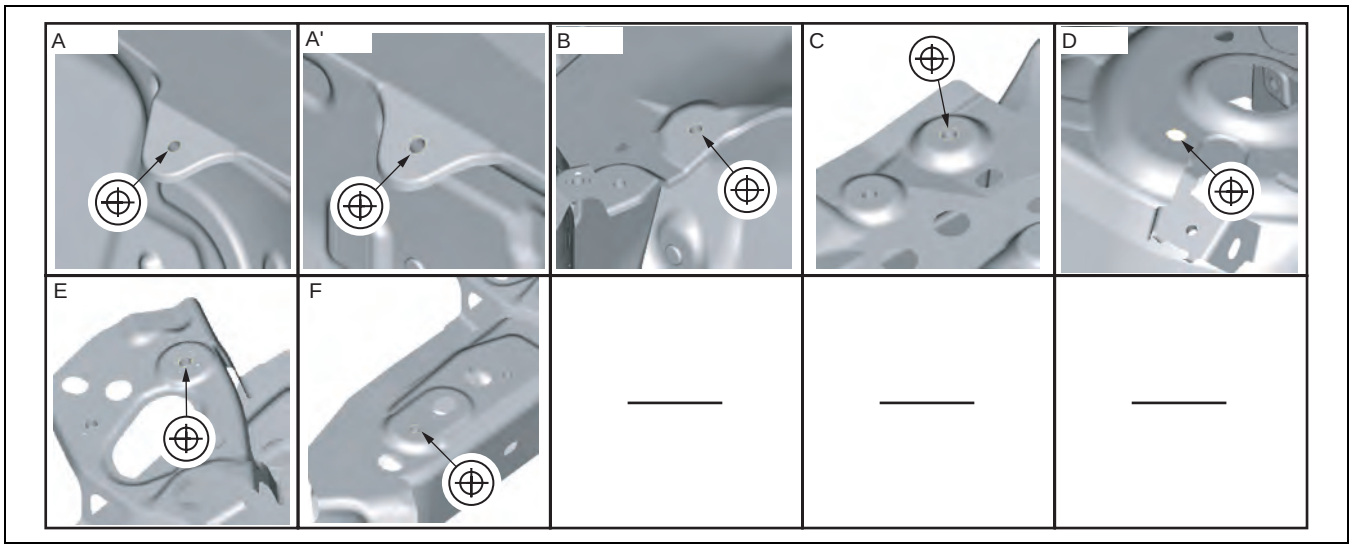

aatjjb00000296

cardiagn.com

Point symbol	Designation	Hole diameter or bolt or nut size (mm {in})
A	Cowl panel installation nut	M8
B	Cowl panel installation nut	M8
C	Hood hinge installation nut	M8
D	Suspension housing (upper) datum hole	ϕ10.2 {0.402}

Point symbol	Designation	Hole diameter or bolt or nut size (mm {in})
E	Front fender panel installation nut	M6
F	Front fender panel installation nut	M6

FRONT BODY DIMENSIONS (2) [DIMENSIONS]

id098010990200

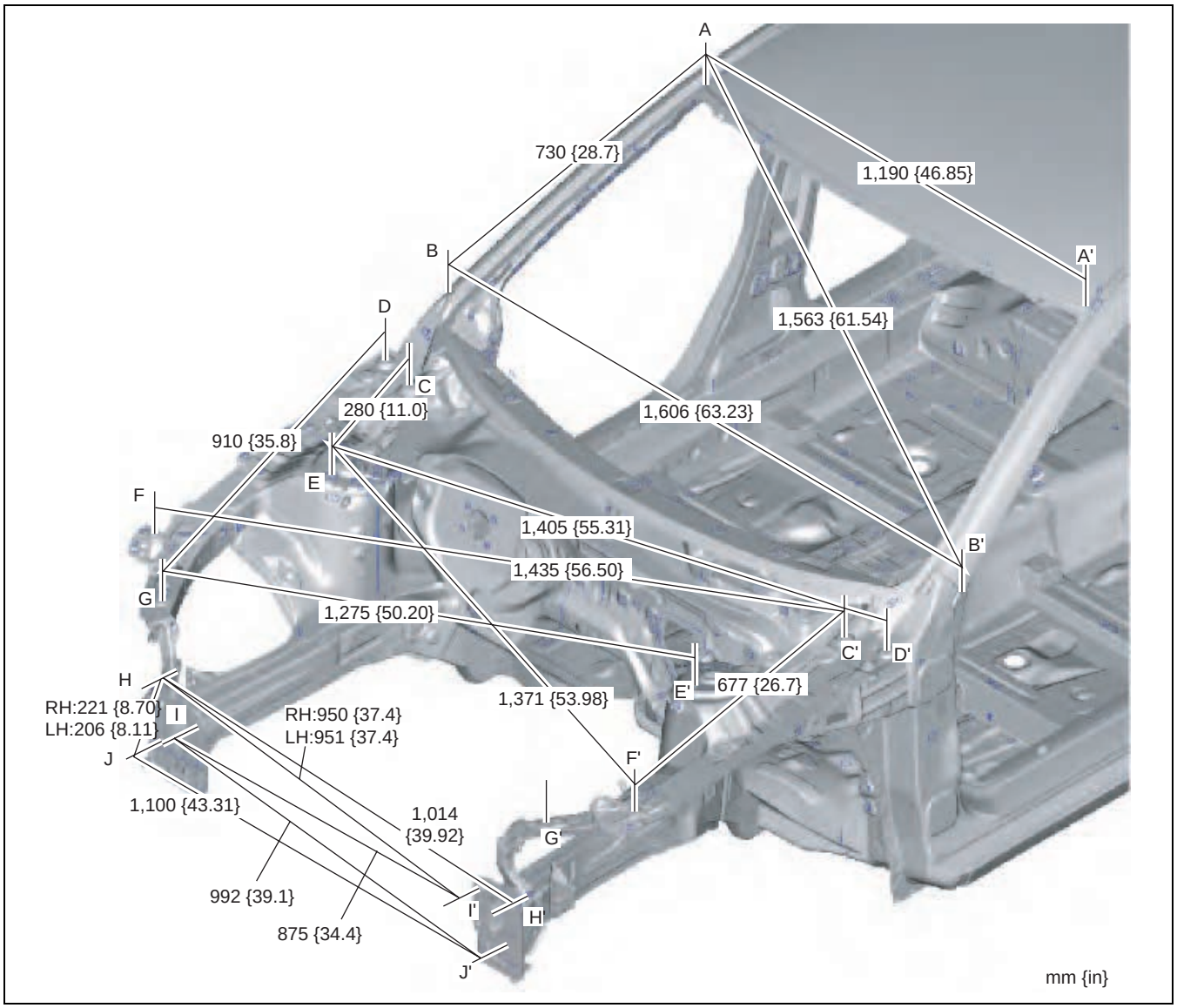

am6zzb0000050

cardiagn.com

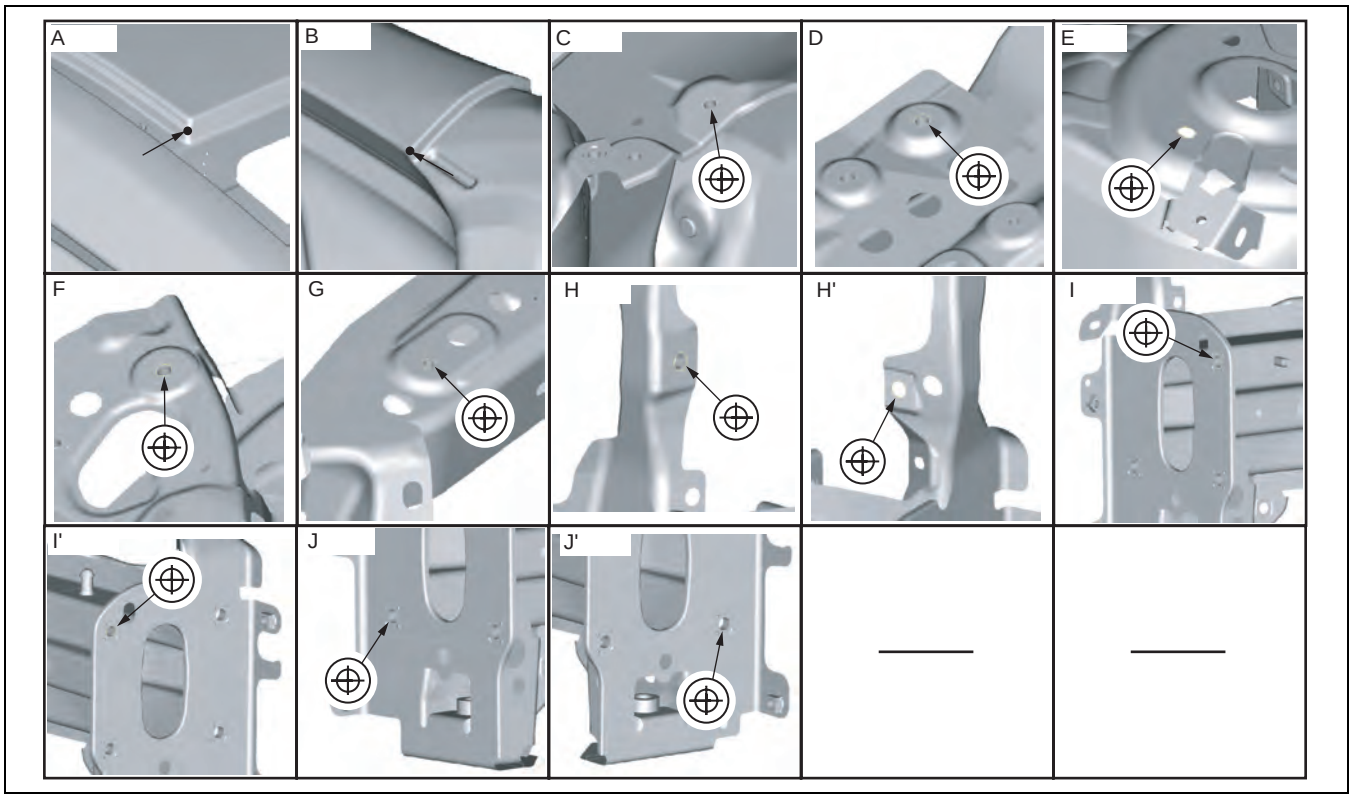

ac5wzb00000168

Point symbol	Designation	Hole diameter or bolt or nut size (mm {in})
A	Roof projection location	-
B	Cabin side outer frame (front pillar outer) projection location	-
C	Cowl panel installation nut	M8
D	Hood hinge installation nut	M8
E	Suspension housing (upper) datum hole	ϕ10.2 {0.402}

Point symbol	Designation	Hole diameter or bolt or nut size (mm {in})
F	Front fender panel installation nut	M6
G	Shroud upper member installation nut	M6
H	Shroud side stay datum hole	ϕ10 {0.39}
I	Front bumper reinforcement installation nut	M10
J	Front bumper reinforcement installation nut	M10

cardiagn.com

CABIN SIDE FRAME DIMENSIONS [DIMENSIONS]

id098010990400

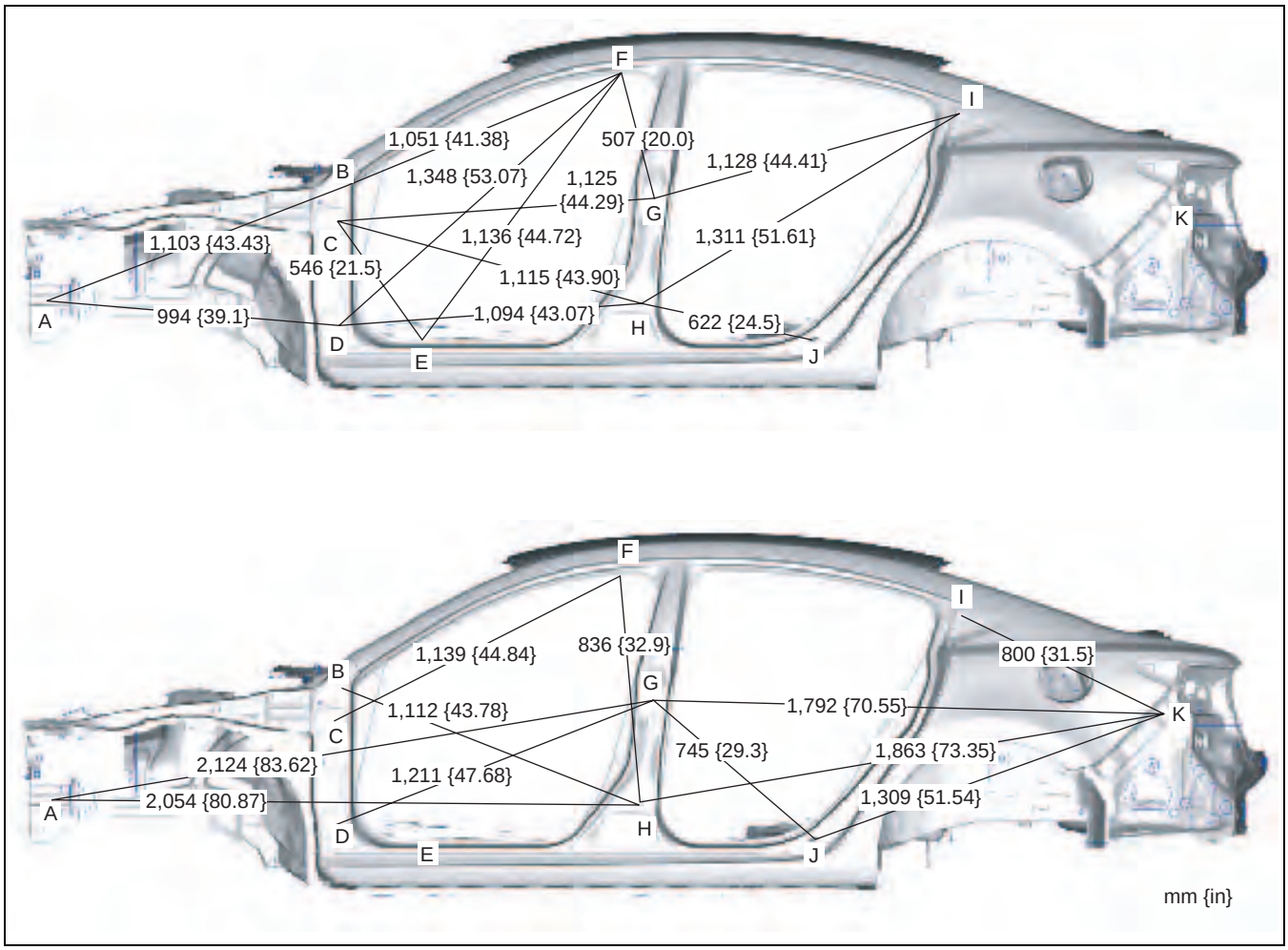

am6zzb0000050

cardiagn.com

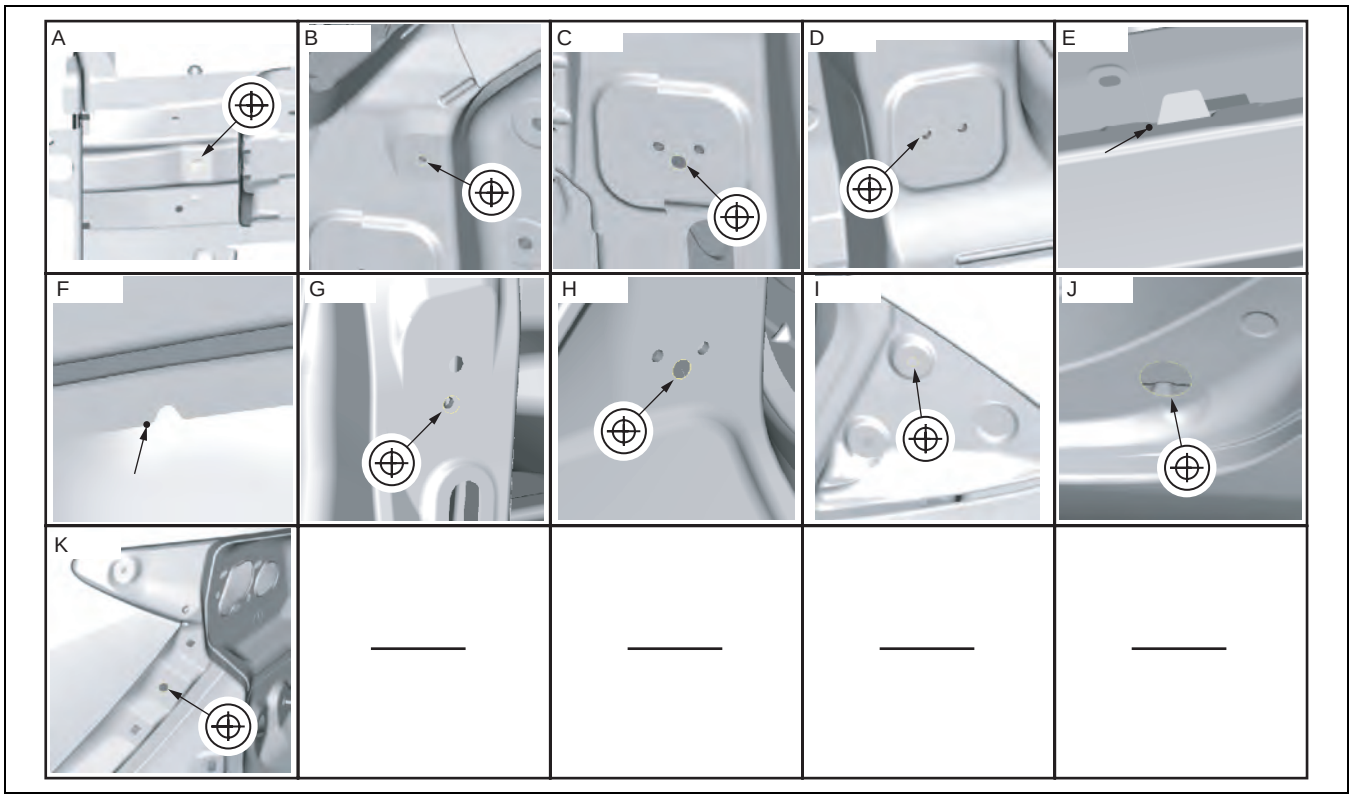

aatjjb00000294

Point symbol	Designation	Hole diameter or bolt or nut size (mm {in})
A	Front side frame (outer) datum hole	ϕ12 {0.47}
B	Front fender installation nut	M6
C	Front door hinge installation hole	ϕ12 {0.47}
D	Front door hinge installation nut	M8
E	Cabin side frame (outer) notch	—
F	Cabin side frame (outer) notch	—

Point symbol	Designation	Hole diameter or bolt or nut size (mm {in})
G	Rear door hinge installation nut	M8
H	Rear door hinge installation hole	ϕ12 {0.47}
I	Rear pillar garnish installation hole	ϕ8 {0.3}
J	Hole cover installation hole	ϕ37 {1.5}
K	Cabin side frame (outer) datum hole	ϕ12 (0.47)

cardiagn.com

ROOM DIMENSIONS (1) [DIMENSIONS]

id098010990500

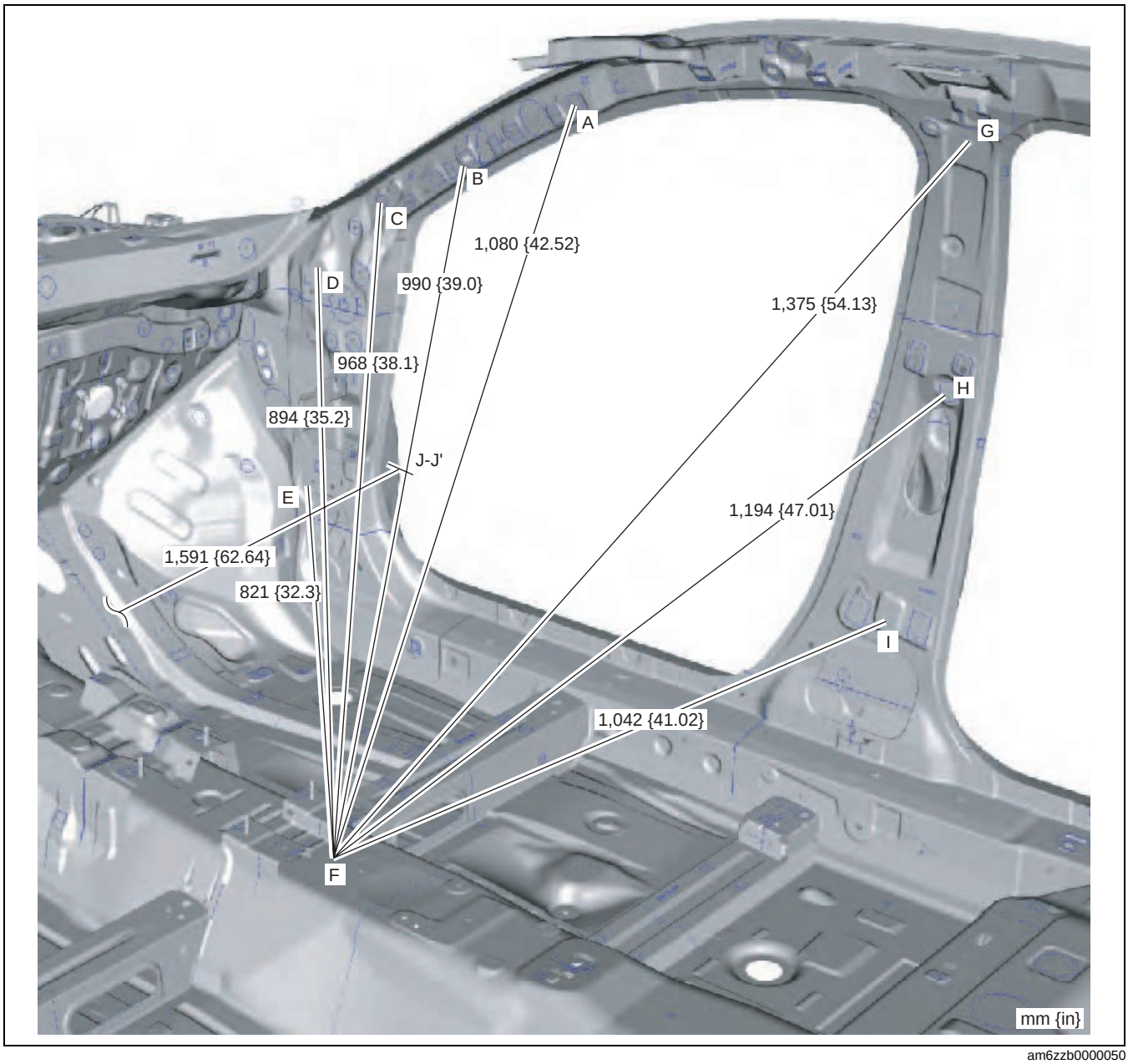

am6zzb0000050

cardiagn.com

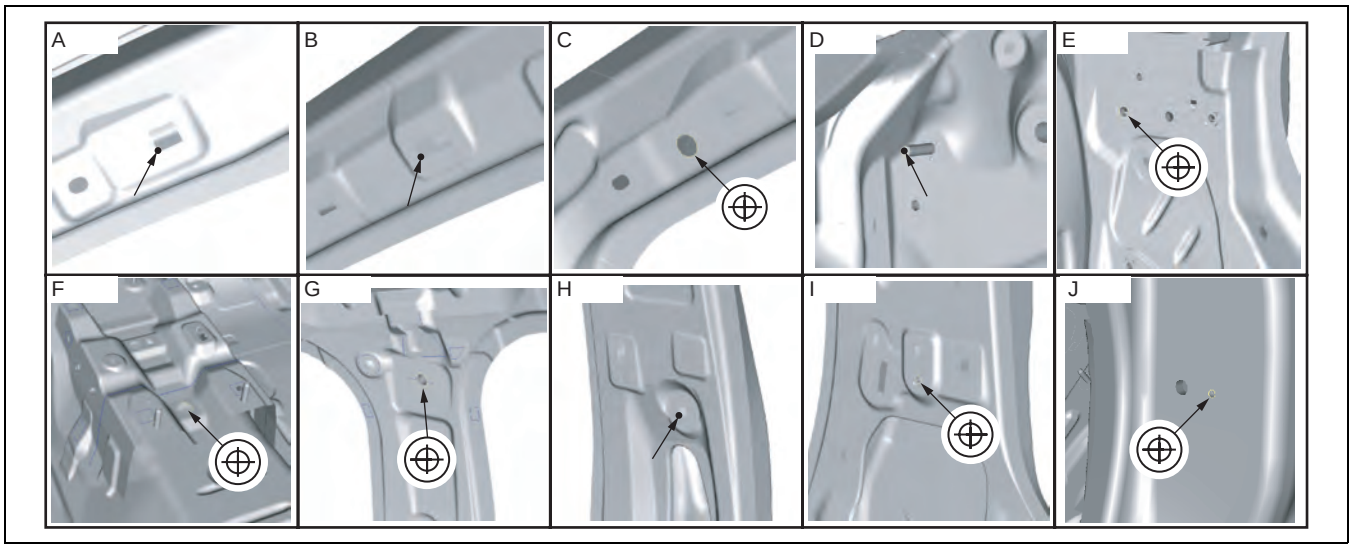

aatjjb00000301

Point symbol	Designation	Hole diameter or bolt or nut size (mm {in})
A	A pillar trim installation square hole	11 X 13 {0.43 X 0.51}
B	A pillar trim installation square hole	20 X 8 {0.79 X 0.3}
C	Front pillar datum hole	ϕ12 {0.47}
D	Dashboard installation stud pin	—
E	Side sill (inner) datum nut	M8

Point symbol	Designation	Hole diameter or bolt or nut size (mm {in})
F	Tunnel reinforcement datum hole	ϕ20 {0.79}
G	Front seat belt upper anchor installation nut	M10
H	Center pillar (inner) datum square hole	7 X 7 {0.3 X 0.3}
I	Pre-tensioner seat belt installation nut	M10
J	Front door checker installation hole	ϕ4 {0.2}

cardiagn.com

ROOM DIMENSIONS (2) [DIMENSIONS]

id098010990600

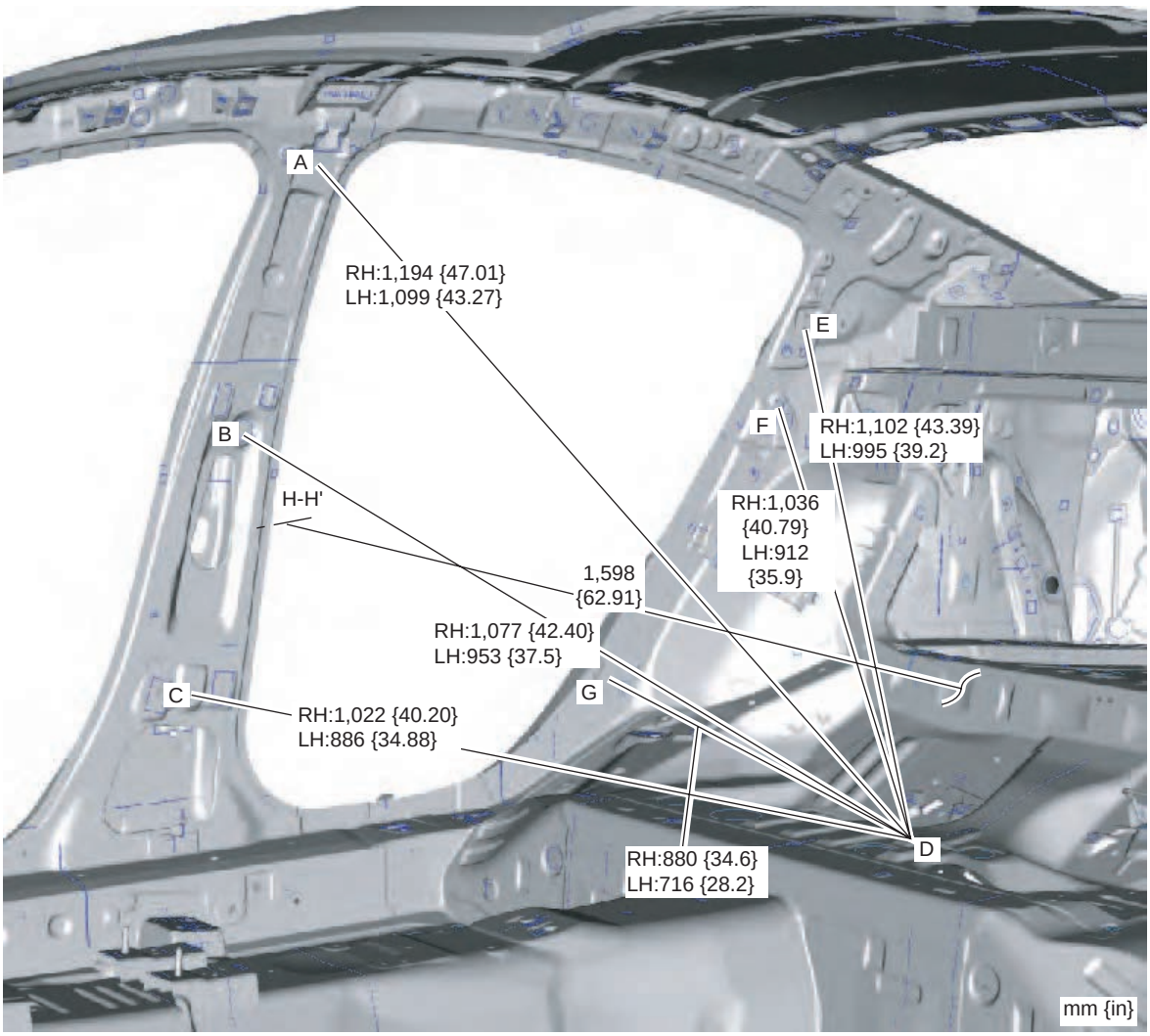

am6zzb0000051

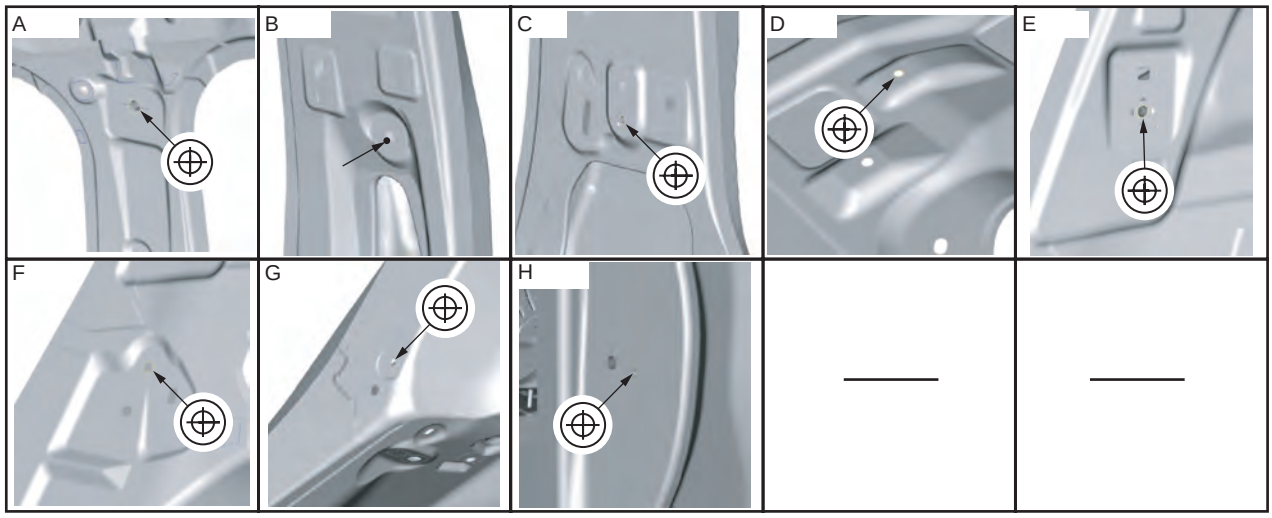

aatjjb00000302

cardiagn.com

Point symbol	Designation	Hole diameter or bolt or nut size (mm {in})
A	Front seat belt upper anchor installation nut	M10
B	Center pillar (inner) datum square hole	7×7 {0.3 X 0.3}
C	Pre-tensioner seat belt installation nut	M6
D	Center floor panel datum hole	ϕ6 {0.2}

Point symbol	Designation	Hole diameter or bolt or nut size (mm {in})
E	RH: Keyless receiver installation nut LH: Condenser installation nut	M6
F	Tire house trim installation hole	ϕ8.6 {0.34}
G	Rear pillar (inner) datum hole	ϕ8.6 {0.34}
H	Rear door checker installation hole	ϕ4 {0.2}

ROOM DIMENSIONS (3) [DIMENSIONS]

id098010990700

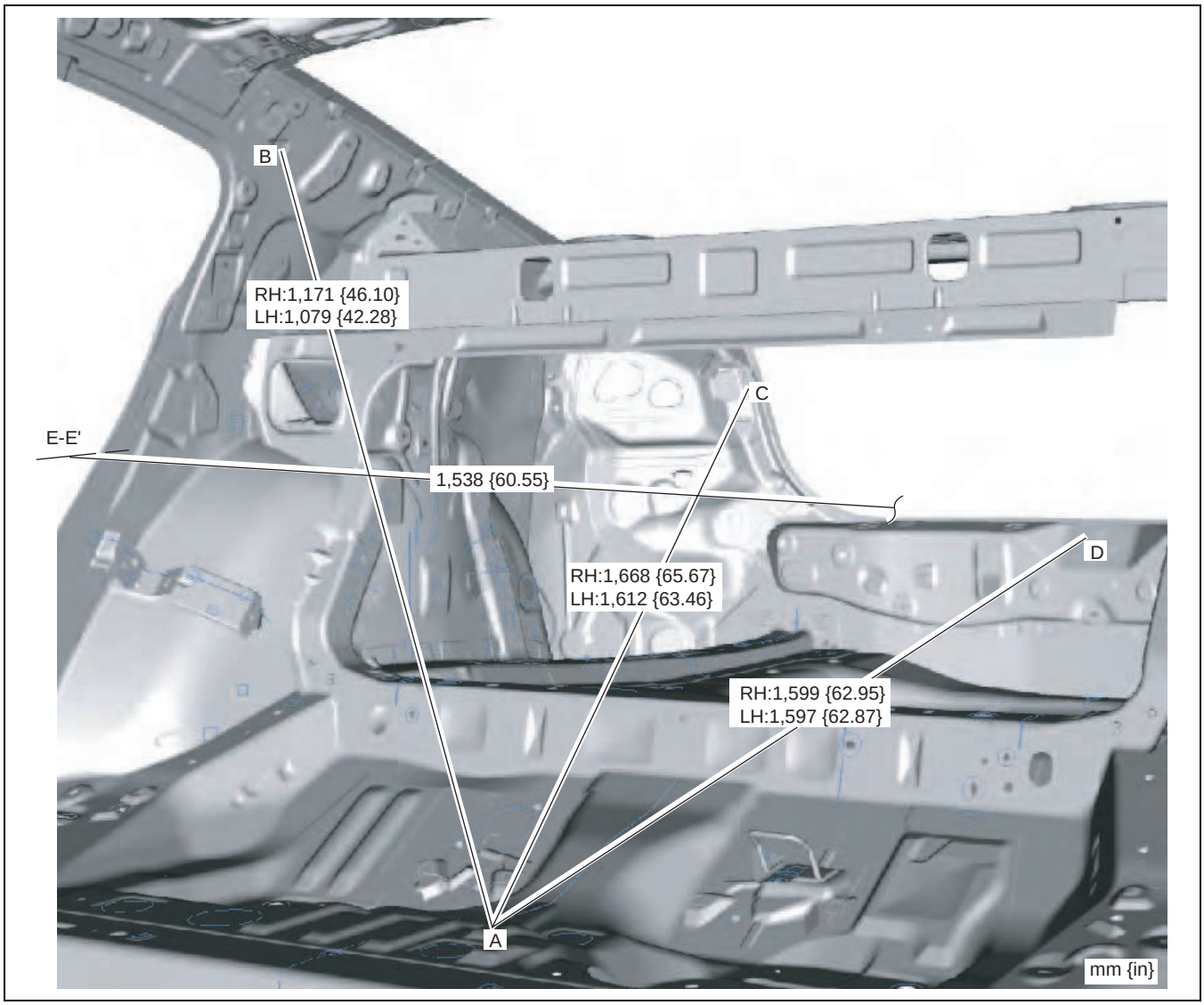

am6zzb0000051

cardiagn.com

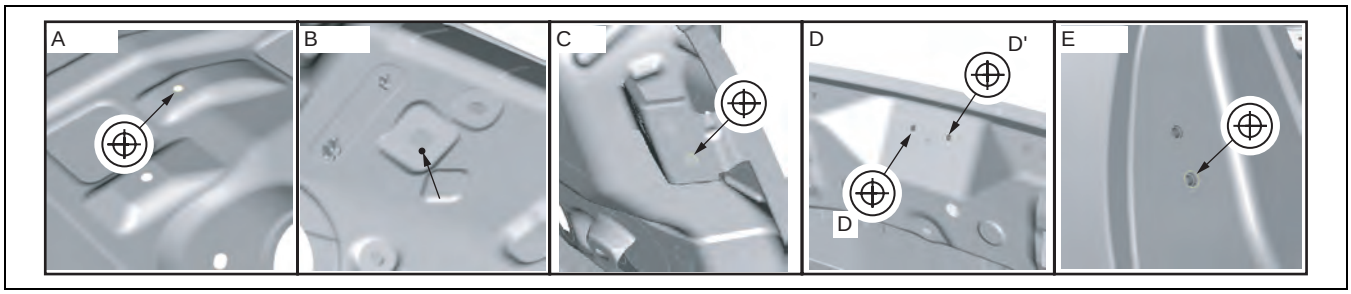

aatjjb00000304

Point symbol	Designation	Hole diameter or bolt or nut size (mm {in})
A	Center floor panel datum hole	ϕ6 {0.2}
B	C pillar trim installation square hole	11X13 {0.43 X 0.51}
C	Trunk side trim installation hole	ϕ6 {0.2}

Point symbol	Designation	Hole diameter or bolt or nut size (mm {in})
D	Trunk lid striker installation nut	M6
E	Rear door striker installation hole	ϕ13 {0.51}

REAR BODY DIMENSIONS [DIMENSIONS]

id098010990800

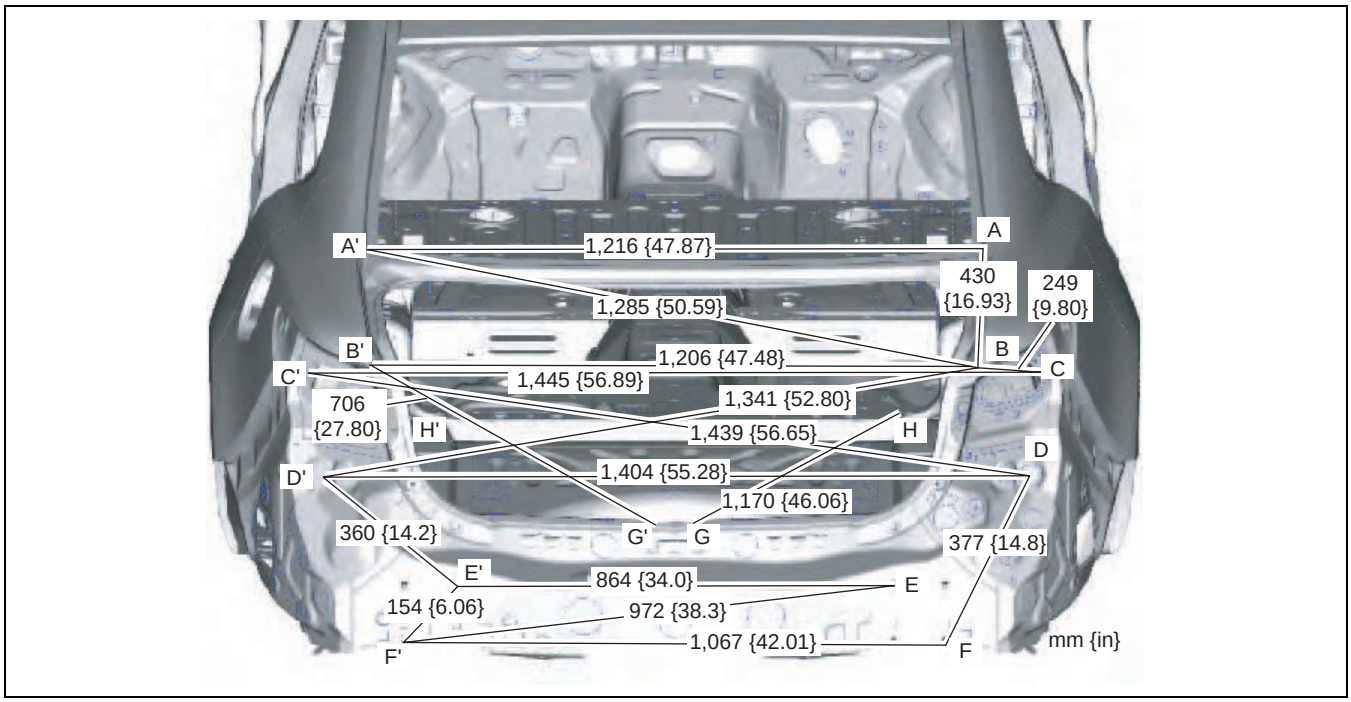

am6zzb0000051

cardiagn.com

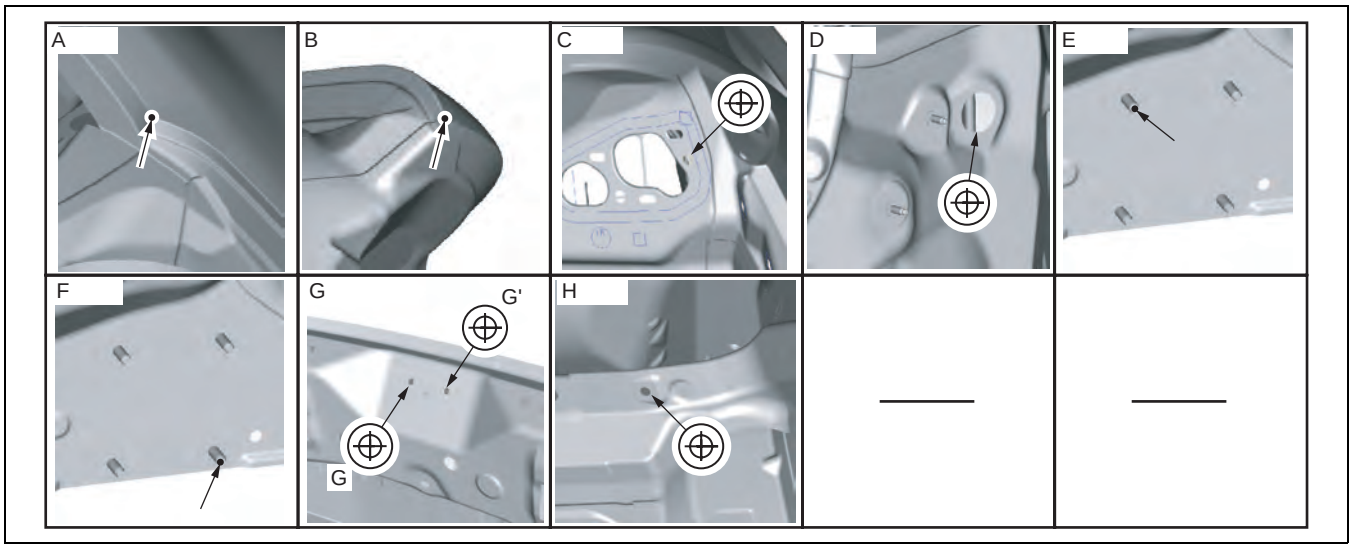

aatjjb00000407

Point symbol	Designation	Hole diameter or bolt or nut size (mm {in})
A	Cabin side frame (outer) (rear fender panel) projection location	—
B	Cabin side frame (outer) (rear fender panel) projection location	—
C	Corner plate datum hole	ϕ10 {0.39}

Point symbol	Designation	Hole diameter or bolt or nut size (mm {in})
D	Rear combination light wiring harness through hole	ϕ35 {1.4}
E	Rear bumper reinforcement installation bolt	M10
F	Rear bumper reinforcement installation bolt	M10
G	Trunk lid striker installation nut	M6
H	Brace bracket datum hole	ϕ10 {0.39}

cardiagn.com

09-80E BODY STRUCTURE [PLASTIC BODY PARTS]

PLASTIC PARTS HEAT RESISTING TEMPERATURE [PLASTIC BODY PARTS] 09-80E–1
REPAIRABLE RANGE OF POLYPROPYLENE BUMPERS [PLASTIC BODY PARTS] 09-80E–2
Repairable Bumpers **09-80E–2**
POLYPROPYLENE BUMPER REPAIR [PLASTIC BODY PARTS]. 09-80E–3
PROCEDURE [PLASTIC BODY PARTS]. 09-80E–4

PLASTIC PARTS HEAT RESISTING TEMPERATURE [PLASTIC BODY PARTS]

id098011740200

Part Name		Code	Material Name	Heat resisting Temperature°C{°F}
Front bumper		PP	POLYPROPYLENE	120 {216}
Cowl grille		PP	POLYPROPYLENE	120 {216}
Front combination light	Lens	PC	POLYCARBONATE	125 {225}
	Housing	PP	POLYPROPYLENE	120 {216}
Power outer mirror	Panel	ABS	ABS	90 {162}
	Visor	AAS	AAS	100 {180}
	Under panel	AAS	AAS	100 {180}
Rear combination light	Lens	PMMA	ACRYLIC	96 {173}
	Housing	AAS	AAS	100 {180}
Rear bumper		PP	POLYPROPYLENE	120 {216}
Reflector	Lens	ABS	ABS	90 {162}
	Housing	PMMA	ACRYLIC	96 {173}
Outer handle lever		PC-PBT	POLYCARBONATE-PBT	125 {212}
Trunk lid light	Lens	PMMA	ACRYLIC	96 {180}
	Housing	AAS	AAS	100 {158}
Liftgate light	Lens	PMMA	ACRYLIC	96 {180}
	Housing	AAS	AAS	100 {158}
High-mount brake light	Lens	PMMA	ACRYLIC	96 {180}
	Housing	PC	POLYCARBONATE	125 {225}
Sail outer garnish		PVC	POLYVINYLCHLORIDE	95 {203}
Front door garnish		AAS	AAS	100 {180}
Rear door garnish		AAS	AAS	100 {180}
Trunk lid garnish		ABS	ABS	90 {162}
Liftgate garnish		PC-ABS	POLYCARBONATE-ABS	100 {180}

Note
- The application of temperatures higher than heat resisting temperatures may result in part deformation.

cardiagn.com

REPAIRABLE RANGE OF POLYPROPYLENE BUMPERS [PLASTIC BODY PARTS]

id098011600100

The three types of damaged bumpers shown below are considered repairable. Although a bumper which has been damaged greater than this could also be repaired, it should be replaced with a new one because such repair would detract from the looks and quality of the bumper. In addition, such repair is not considered reasonable in terms of work time.

Repairable Bumpers

1. A bumper with a hole less than 50 mm {1.97 in} in diameter.

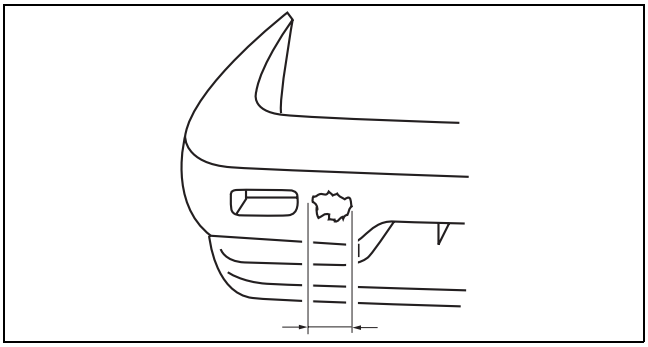

am8rrb00000046

2. A bumper with a crack less than 100 mm {3.94 in} in length.

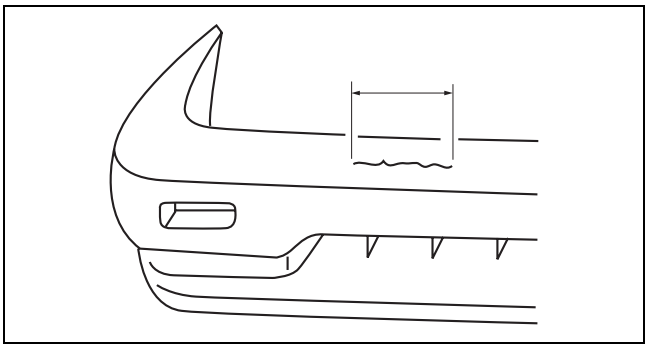

am8rrb00000047

3. A bumper with a crack less than 100 mm {3.94 in} in length that is less than half of the width of the bumper.

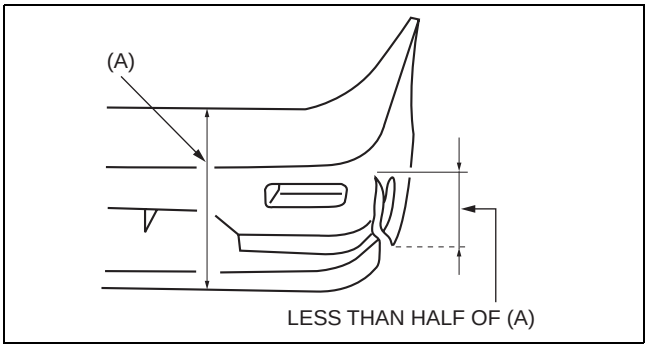

am8rrb00000048

cardiagn.com

POLYPROPYLENE BUMPER REPAIR [PLASTIC BODY PARTS]

id098011600200

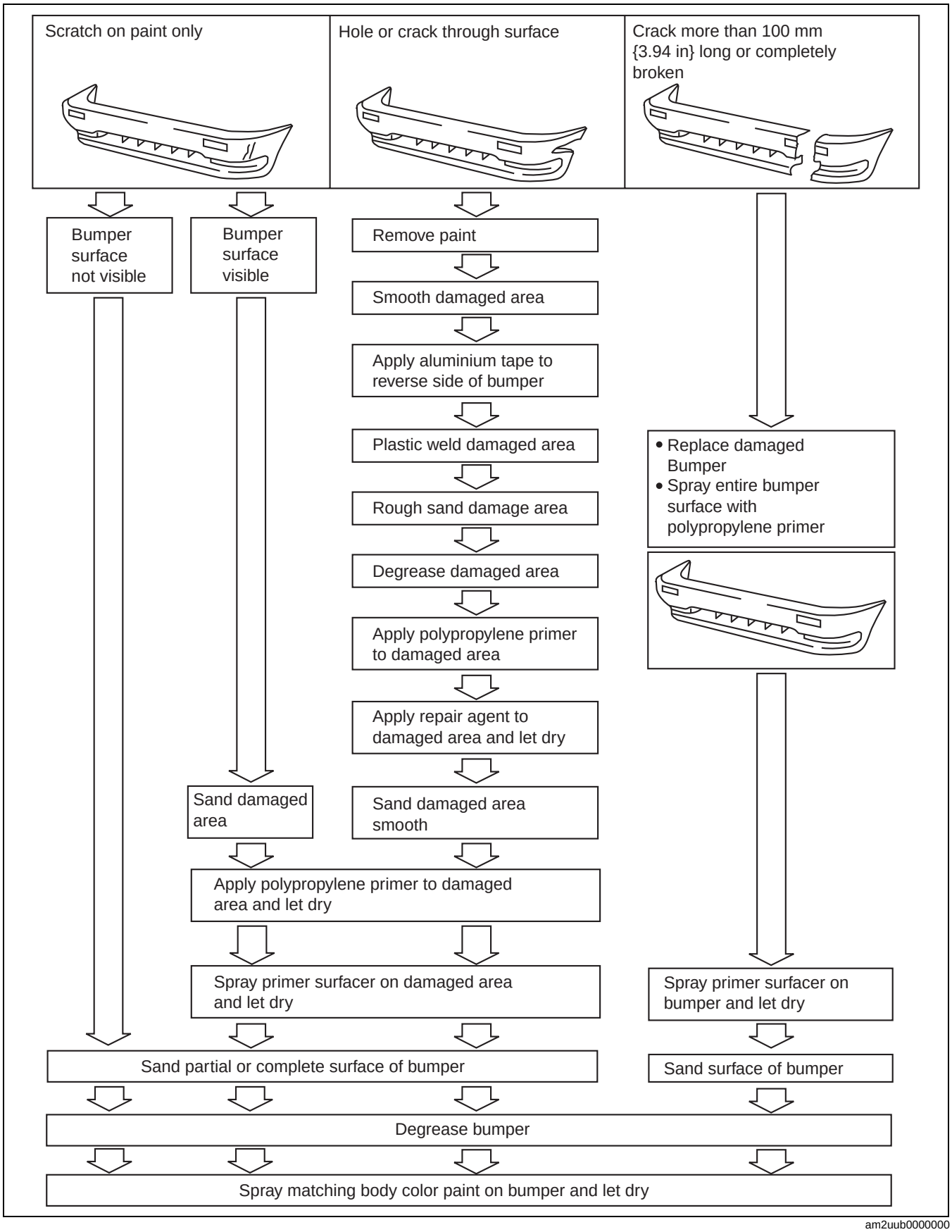

am2uub0000000

cardiagn.com

PROCEDURE [PLASTIC BODY PARTS]

id098011600300

Repair of polypropylene bumpers having damage that has reached the surface of the polypropylene and are too serious to be restored by painting only.

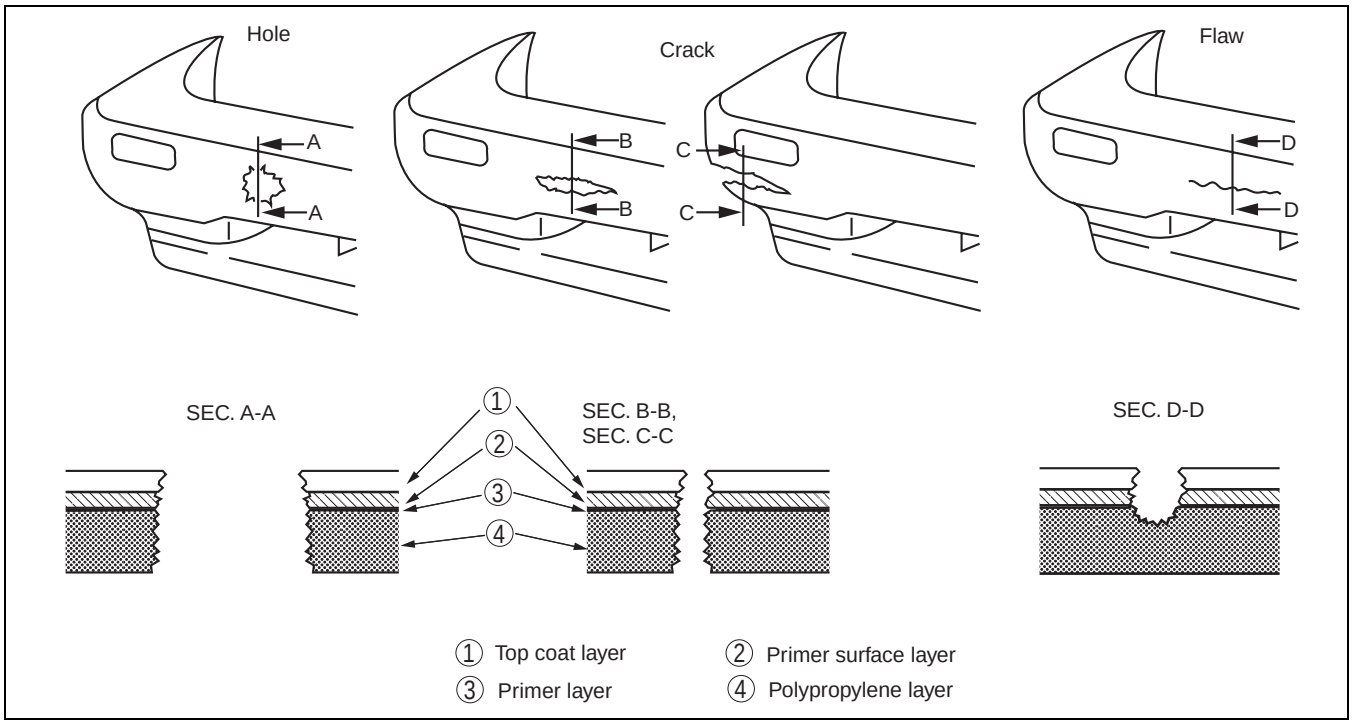

am2uub0000001

1. Cut the rough edges around the damage with a knife to make it smooth. Sand the area with a sander to make an angle of about 45°.

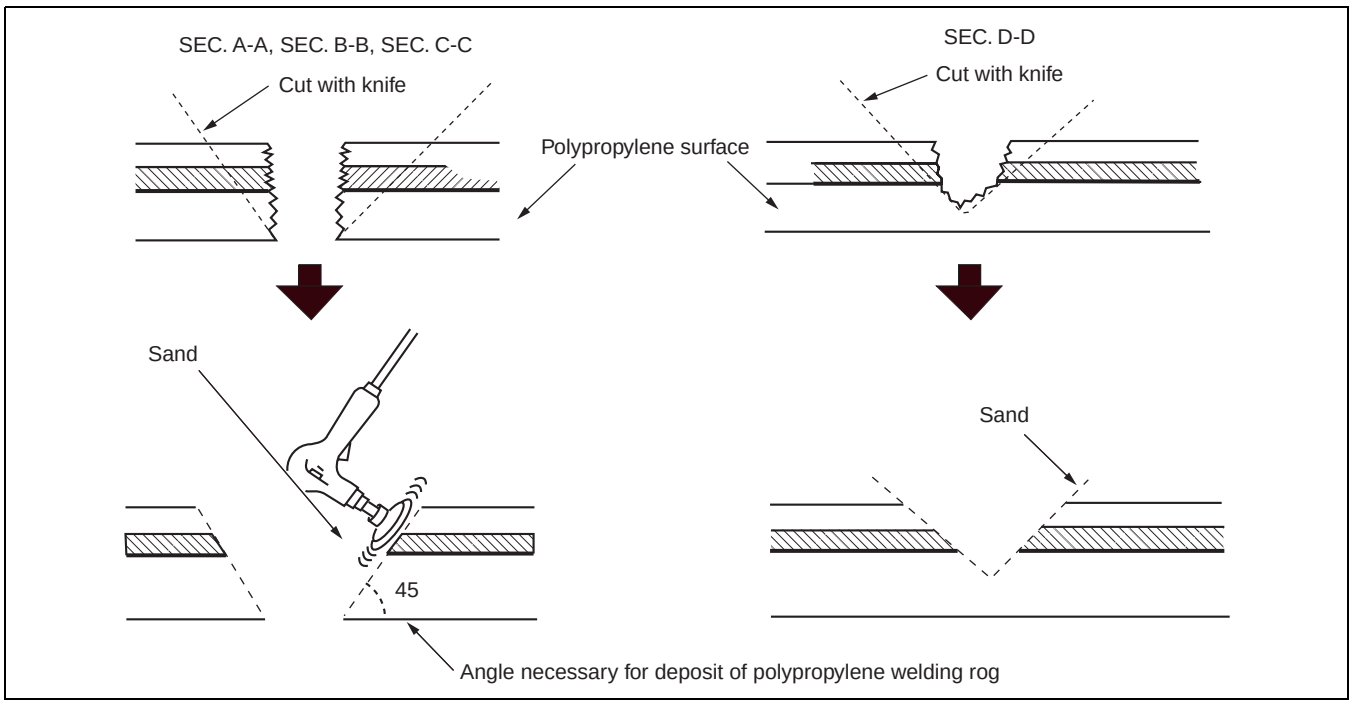

am2uub0000001

cardiagn.com

2. Weld the damaged area.
   - For repair of a cracked area, melt the crack together with a heat gun and a melting attachment.

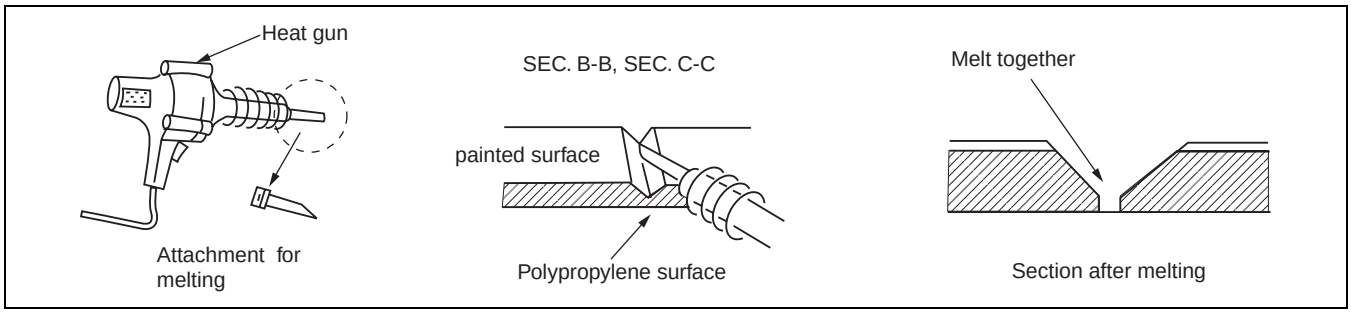

am2uub0000001

   - For repair of a hole, degrease the area on both sides of the bumper and apply aluminium tape on the reverse side of the damage area.

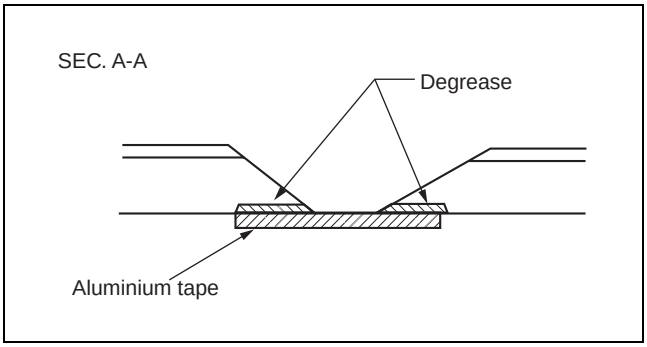

am2uub0000001

3. Melt the polypropylene welding rod with a heat gun and deposit it the cracked area.

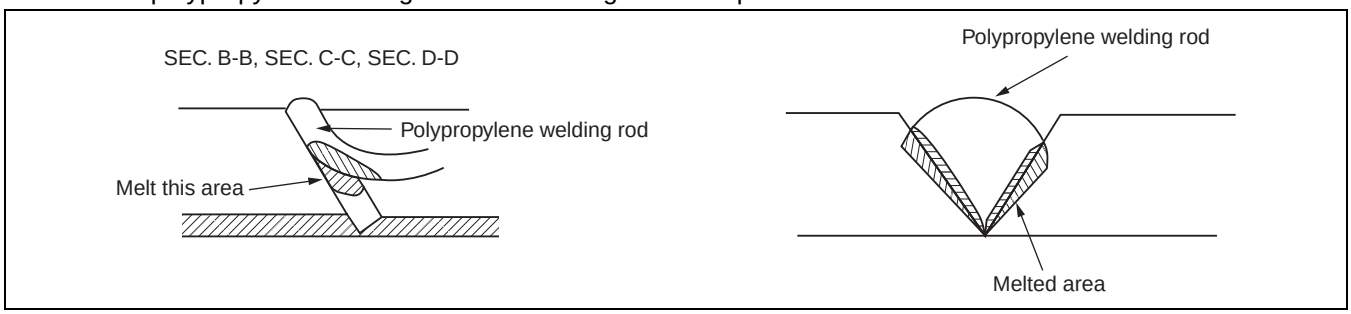

am2uub0000001

Note
- Heat the shaded area to melt it.
- Take care not to overly melt welding rod. If the part is welded with the welding rod melted like jelly, the welding strength will be reduced.
- Hold the heat gun 10—20 mm {0.39—0.79 in} from the part being welded.
- Do not move the welding rod until the welded parts cool.

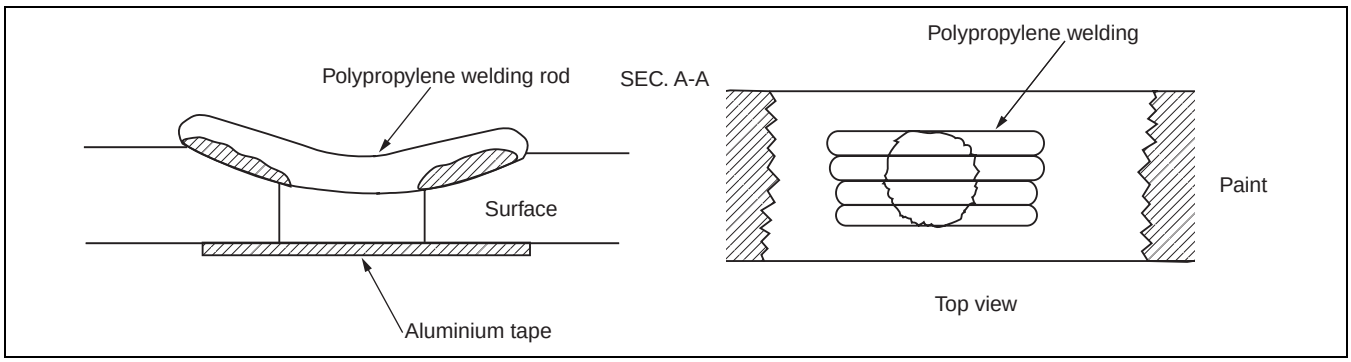

am2uub0000001

cardiagn.com

4. Sand the surface of the polypropylene gradually as it is easily melted by the abrasion heat. Sand the area to which repair agent will be applied.

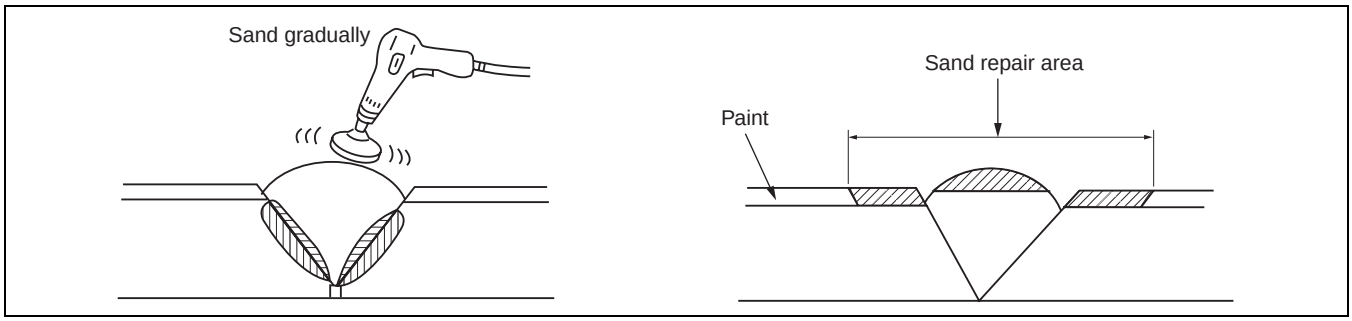

am2uub0000001

5. Uniformly apply polypropylene primer with a brush to an area larger than the repaired area. Allow to dry about 10 minutes at 20 °C {68 °F}.

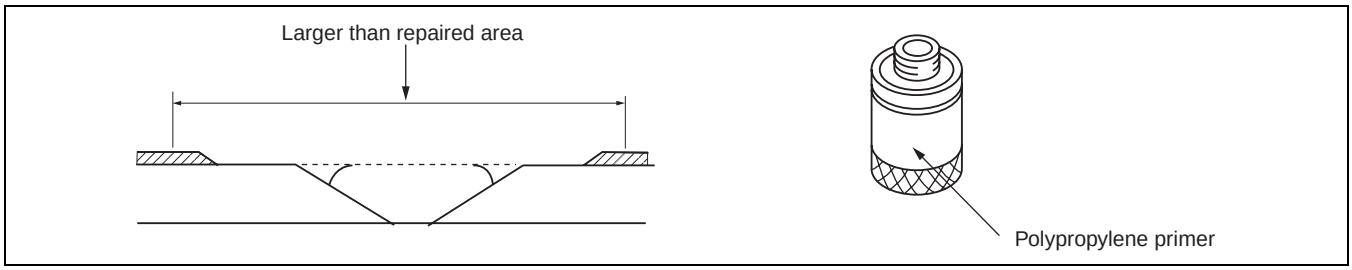

am2uub0000001

6. Mix the main agent and the stiffening agent in a ratio of one to one. Apply the mixed repair agent to the damaged area.

Note
- When mixing the main and stiffening agents, take care not to allow bubbles to form.
- The repair agent hardens quickly (about 5 minutes); proceed with the work immediately after mixing the agents.
- Allow about 30 minutes to dry (20 °C {68 °F}) before sanding.

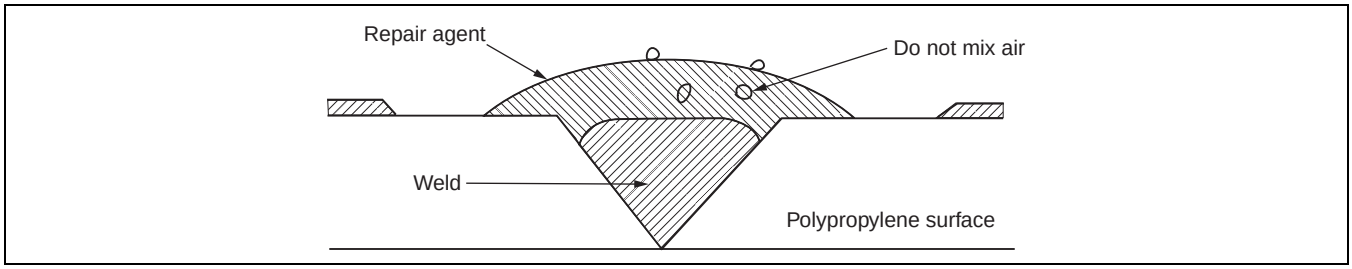

am2uub0000001

The repair agent is a two part epoxy adhesive.
When the repair agent hardens, it will provide a good finish with the same flexibility as the polypropylens.
The repair agent for a **urethane** bumper is also a two part adhesive compound. However, this is different from that for a polypropylene bumper. If the incorrect repair agent is used, the repair will be faulty.

cardiagn.com

7. Sand the area with #180—240 sandpaper.

Note
- If excessive force is applied to the area when sanding, the surface will be damaged.
- If fuzz remains around the repaired area, melt it with a heat gun.

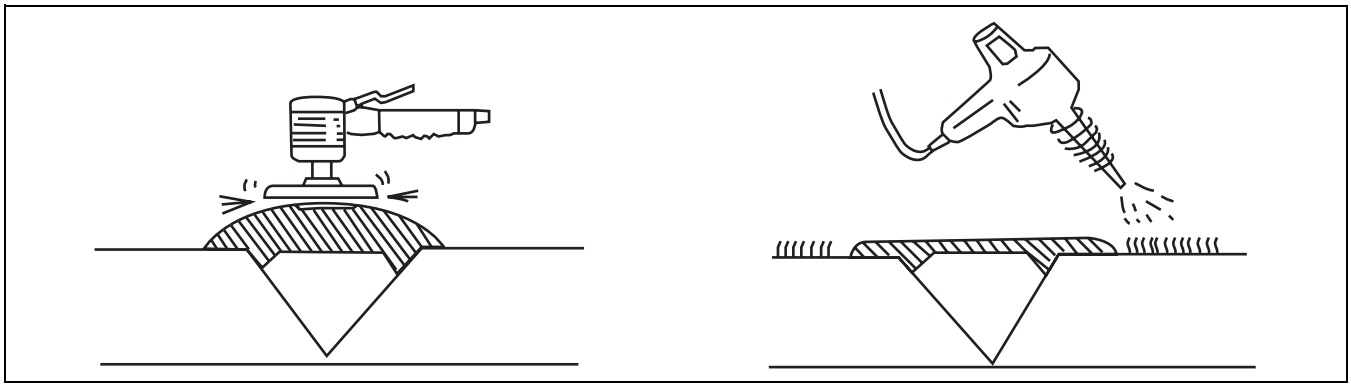

am2uub0000001

8. Degrease the painted surface.
9. Mix the primer and the hardener at a ratio of one to one. Apply the primer to the repaired area and the surface of the bumper with a brush or spray.

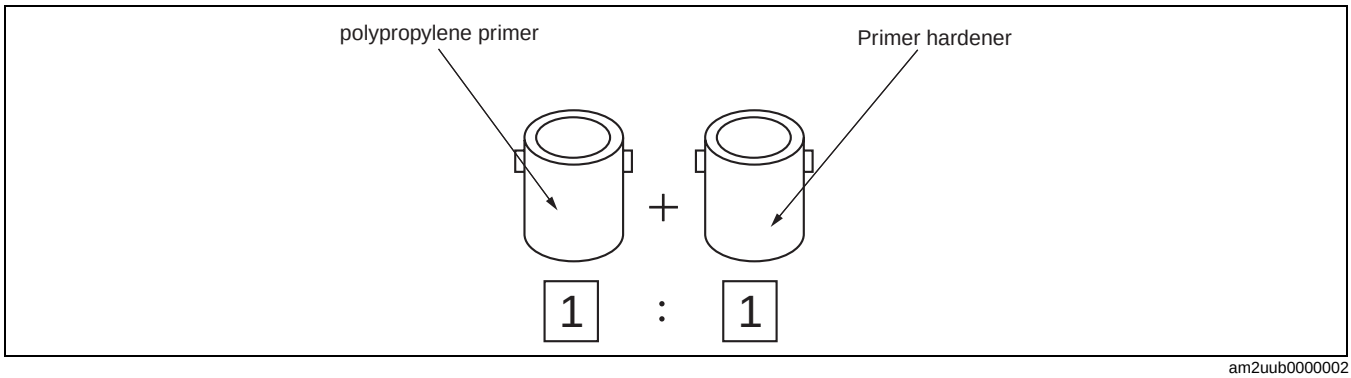

am2uub0000002

Use the primer within 16 hours after it is mixed.

Note
- Polypropylene primer will dissolve even after drying if it is wiped with solvent. Use only water to clean around the primer.

10. Allow the part to dry.

cardiagn.com

11. Add the softener to the urethane primer surfacer and spray it on the repaired area.
    a. Mixing method
       Urethane primer surfacer + Softener ..... Mixture A
       Mixture A + hardener ..... Mixture B
       Dilute mixture B with thinner to spray on bumper
    b. Viscosity
       14—16 seconds/viscosimeter 20 °C {68 °F}

    Note
    - Mix the solutions at the specified ratio.

    c. Spray pressure
       300—400 kPa {3—4 kg/cm^2, 43—57 psi}
    d. Standard film thickness
       30—40 μ
    e. Spray method
       Spot-spray primer surfacer on bumper three or four times

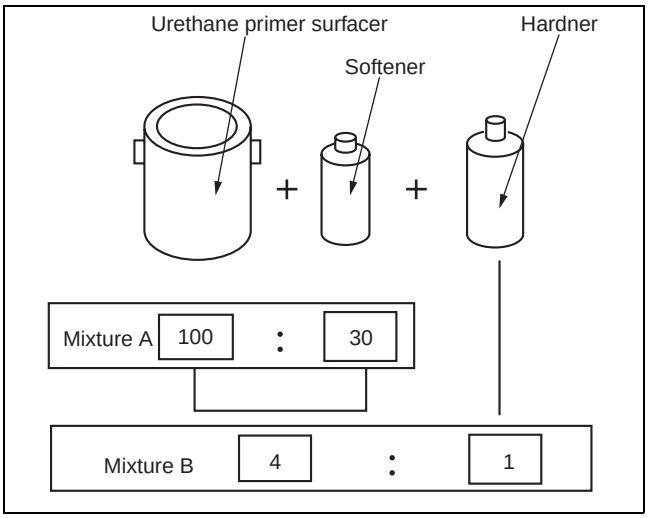

am2uub0000002

12. Air drying 20 °C {68 °F} — 8 hours minimum.
    Forced drying 60 °C {140 °F} — 1 hour
13. Lightly sand the complete surface of the bumper with #400—#600 sandpaper. Do not expose the surface of the polypropylene. (Wet or dry sanding is acceptable.)
14. Wipe the complete surface of the bumper with degreasing agent. Quickly wipe the surface with a clean rag to degrease it.
15. Apply a matching coat of body color to the polypropylene bumper.

    Note
    - Be sure to use only urethane primer for a urethane bumper and polypropylene primer for a polypropylene bumper. Other paints for repairing a polypropylene bumper are the same as those for the urethane bumper.

16. Air drying 20 °C {68 °F} — 8 hours minimum.
    Forced drying 60 °C {140 °F} — 1 hour

    Note
    - Let the part air dry when possible as forced drying could cause bubbles in the top coat.

cardiagn.com

09-80F BODY STRUCTURE [CONSTRUCTION STANDARD VALUES]

CONSTRUCTION STANDARD VALUES [CONSTRUCTION STANDARD VALUES] **09-80F–1**
Front View **09-80F–1**
Rear View **09-80F–2**

CONSTRUCTION STANDARD VALUES [CONSTRUCTION STANDARD VALUES]

id0980c0740300

Front View

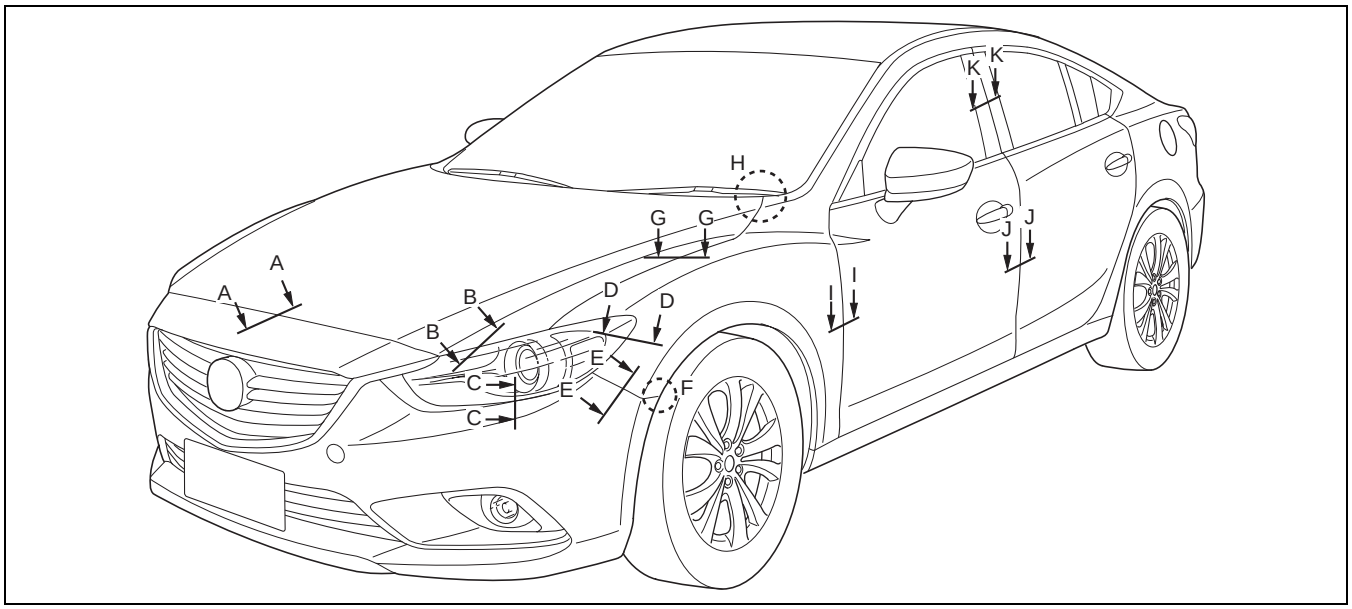

aatjjb00000330

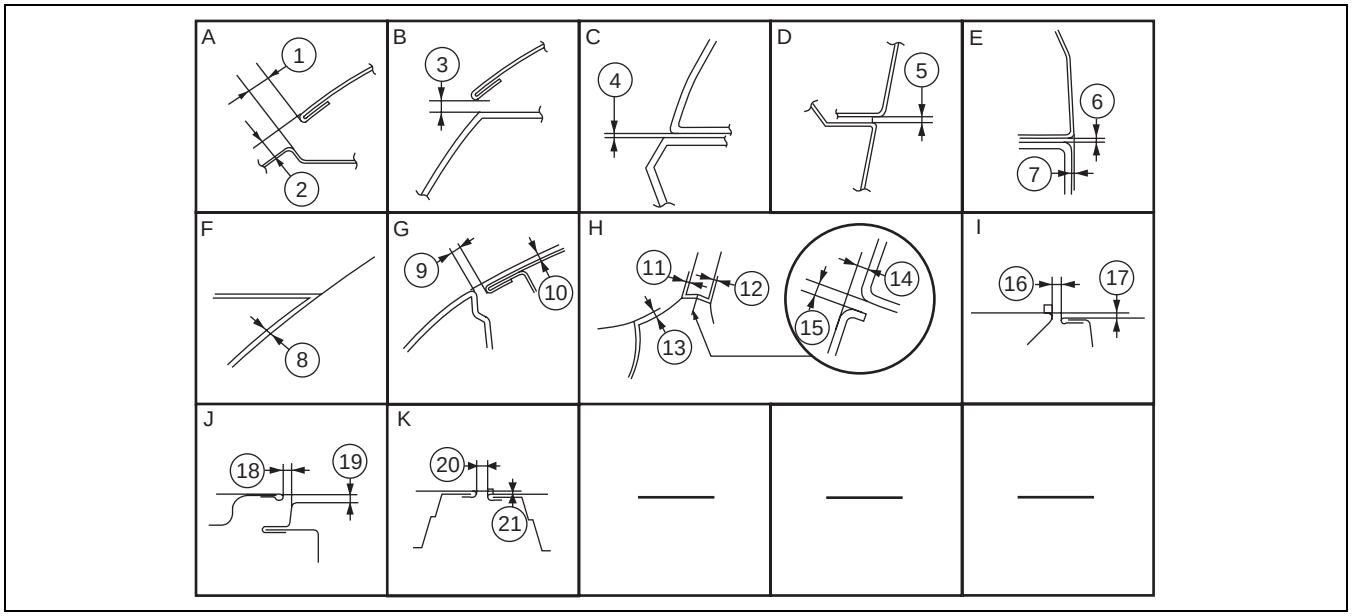

am6xub0000011

No.	Measurement part	Standard values (mm {in})	Maximum values (mm {in})	Minimum values (mm {in})	Side by difference (mm {in})
A	1	4.2 {0.17}	6.0 {0.24}	2.4 {0.094}	2.0 {0.079}
	2	0	2.0 {0.079}	-2.0 {-0.079}	-

No.	Measurement part	Standard values (mm {in})	Maximum values (mm {in})	Minimum values (mm {in})	Side by difference (mm {in})
B	3	6.4 {0.25}	8.3 {0.33}	3.5 {0.14}	2.5 {0.098}
C	4	1.8 {0.078}	3.3 {0.13}	0.3 {0.01}	1.5 {0.059}

cardiagn.com

No.	Measurement part	Standard values (mm {in})	Maximum values (mm {in})	Minimum values (mm {in})	Side by difference (mm {in})
D	5	1.8 {0.071}	3.1 {0.12}	0.5 {0.02}	1.3 {0.051}
E	6	0.5 {0.051}	1.8 {0.071}	-	-
	7	0.5 {0.051}	1.2 {0.047}	-0.2 {-0.008}	-
F	8	0	1.5 {0.059}	-1.5 {-0.059}	-
G	9	3.5 {0.14}	4.5 {0.18}	2.5 {0.098}	1.0 {0.039}
	10	0	1.0 {0.039}	-1.0 {-0.039}	-
H	11	0	1.0 {0.039}	-1.0 {-0.039}	-
	12	0	1.0 {0.039}	-1.0 {-0.039}	-
	13	0	1.2 {0.047}	-1.2 {-0.047}	-
	14	0	1.5 {0.059}	-1.5 {-0.059}	-
	15	2.0 {0.079}	3.2 {0.13}	0.8 {0.03}	1.2 {0.047}

No.	Measurement part	Standard values (mm {in})	Maximum values (mm {in})	Minimum values (mm {in})	Side by difference (mm {in})
I	16	3.5 {0.14}	4.5 {0.18}	2.5 {0.098}	1.0 {0.039}
	17	0	1.0 {0.039}	-1.0 {-0.039}	-
J	18	3.5 {0.14}	4.5 {0.18}	2.5 {0.098}	1.0 {0.039}
	19	0	1.0 {0.039}	-1.0 {-0.039}	-
K	20	5.0 {0.20}	6.9 {0.27}	3.1 {0.12}	1.9 {0.075}
	21	0	2.0 {0.079}	-2.0 {-0.079}	-

Rear View

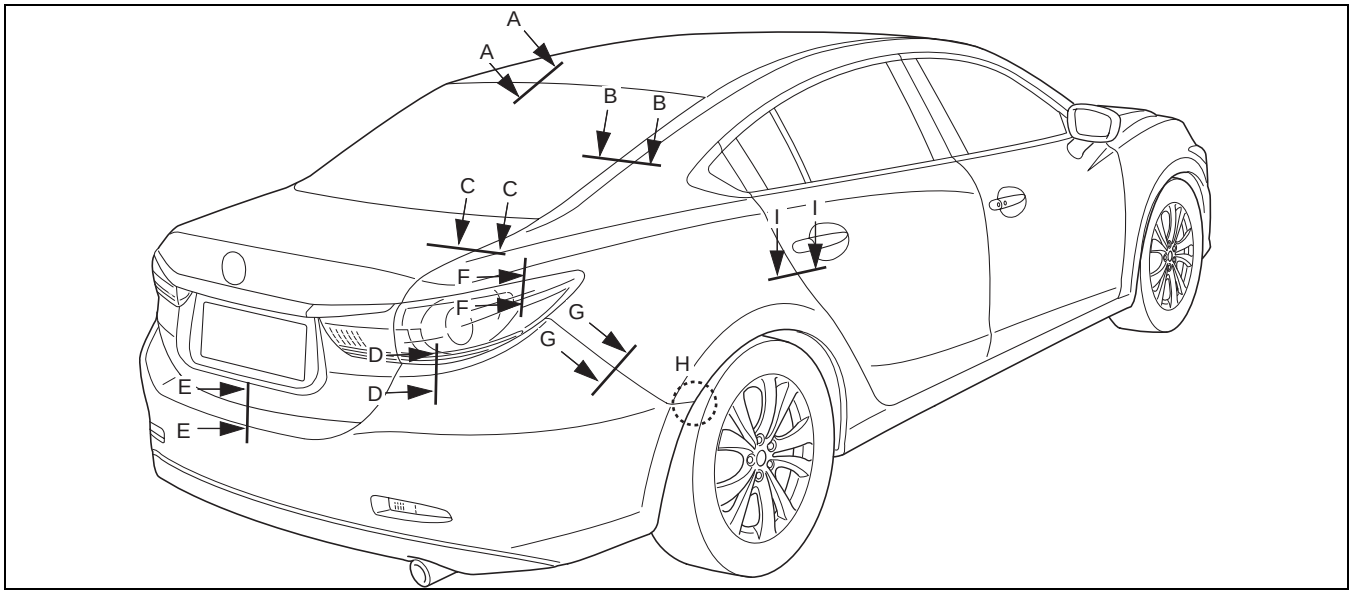

aatjjb00000331

cardiagn.com

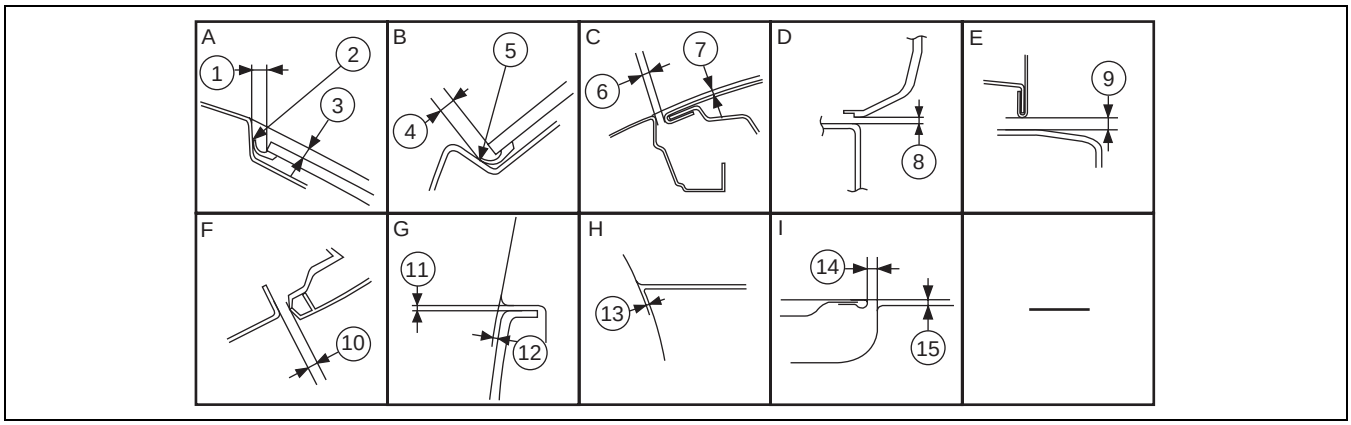

am6xub0000011

No.	Measurement part	Standard values (mm {in})	Maximum values (mm {in})	Minimum values (mm {in})	Side by difference (mm {in})
A	1	4.0 {0.16}	5.7 {0.22}	2.3 {0.091}	-
	2	0	0.5 {0.02}	-	-
	3	2.0 {0.079}	3.8 {0.15}	0.2 {0.008}	-
B	4	4.0 {0.16}	6.2 {0.24}	1.8 {0.071}	-
	5	0	0.5 {0.02}	-	-
C	6	3.5 {0.14}	4.5 {0.18}	2.5 {0.098}	1.0 {0.039}
	7	0.5 {0.02}	1.5 {0.059}	-0.5 {-0.059}	1.2 {0.047}
D	8	1.8 {0.071}	3.3 {0.13}	0.3 {0.01}	-

No.	Measurement part	Standard values (mm {in})	Maximum values (mm {in})	Minimum values (mm {in})	Side by difference (mm {in})
E	9	6.0 {0.24}	8.0 {0.31}	4.0 {0.16}	2.0 {0.079}
F	10	1.8 {0.071}	3.0 {0.12}	0.6 {0.02}	-
G	11	0.5 {0.02}	1.8 {0.071}	-	-
	12	0.5 {0.02}	1.2 {0.047}	-0.2 {-0.008}	-
H	13	0	2.0 {0.079}	-2.0 {-0.079}	-
I	14	3.5 {0.14}	4.5 {0.18}	2.5 {0.098}	1.0 {0.039}
	15	0	1.0 {0.039}	-1.0 {-0.039}	-

cardiagn.com

cardiagn.com