11 00 ... Handling components after flood damage

Flood damage can occur if the permissible fording depth of a vehicle is exceeded. Ingress of water can cause damage to the engine (water shock) or components.

Because dirt particles generally enter into the component with the water (e.g. starter motor, wiring harness), the components need to be thoroughly inspected.

Residual moisture in the components leads to corrosion (increased contact resistance in the component), which can lead to a component failure at a later time.

If water ingress into the electrical components cannot be ruled out, it is recommended to replace the component to ensure correct functioning through the vehicle lifetime.

cardiagn.com

61 00 ... Information on removing, connecting and changing the battery

Observe safety informations for handling vehicle battery.

Disconnecting the battery

Before disconnecting battery:

Turn off the ignition and other electrical loads/consumers to prevent sparking when reconnecting.

Note:

> If the ignition is not turned off when the battery is disconnected, fault memories may be set in some control units.

Important!

- There is a danger of mixing up battery cables: If the battery positive and negative leads are the same colour and you are in doubt, follow the polarity to the battery, then mark and cover the leads.
- The on-board computer and clock may lose your data.

General notes on disconnecting battery:

- Do not disconnect battery leads and leads from alternator and starter motor while engine is running.
- Disconnect terminal of battery earth lead from the battery. Cover battery negative terminal(s) and secure.
- Disconnect both battery earth leads in versions with an auxiliary battery. Cover battery negative terminal(s) and secure.
- When work is carried out on the electrical system, faults may be caused in the fault memories of some control units when the battery is connected.
- When installing battery terminal: Tightening torque 61 21 1AZ.

AGM battery only:

- On vehicles with IBS at negative battery terminal:
  Do not under any circumstances pull/lever off pole shoes by force.
  Do not under any circumstances release the hexagon socket screw of the IBS.

Connected battery

After connecting battery:

Important!

> The scope of application of some systems may be restricted after an open circuit.
>
> Personal Profiles may also be lost.
>
> Settings or activations must be carried out, depending on the equipment specification.
>
> For example:
>
> - Activate slide/tilt sunroof, if necessary
> - Activate power window, if necessary
>
> Refer to the diagnosis system for further vehicle-specific information.

Battery replacement

A vehicle battery is constructed for the installation location and the individual power requirements of the particular vehicle. These individual power requirements depend on the motorisation and different types of

cardiagn.com

equipment. The individually assigned vehicle battery is the ideal compromise between the power requirements of the vehicle electrical system and the weight and service life of the vehicle battery.

Vehicles with the automatic engine start-stop function or particular engine types and optional equipment are equipped with a special vehicle battery (AGM battery), since only this battery type can provide elevated power requirements over the extended service life. Installing a different vehicle battery can cause problems with vehicle electronics, can reduce functions or can cause leakage of battery acid.

In the event of an accident where the airbags are deployed in vehicles with a vehicle battery in the luggage compartment, the electrical connection between the vehicle battery and the trigger is automatically disconnected through pyrotechnics. This prevents possible short-circuiting.

Proper operation of all of these safety and convenience functions requires a battery that conforms with specifications and that is properly registered in vehicles with energy management systems (IBS, power module).

Vehicles with energy management systems (IBS, power module): Register battery replacement.

The vehicle electrical system is informed about the vehicle battery characteristic data, such as type, size, age and current power capacity. Therefore, there will always be only one work scope provided that is permitted by the current status of information.

If performance readiness drops below a defined minimum, a Check Control message will be generated to advise the driver that the battery must be replaced.

When installing a new vehicle battery, the battery must be registered and thus must also be registered with the vehicle electrical system.

Note:

> Only this registration/logon will ensure that the corresponding Check Control message will go out again.

Diagnosis system:

Registering the battery replacement:

- Service functions
- Body
- Voltage supply
- Register battery replacement

When retrofitting, a more powerful battery may be used. Standard batteries may always be replaced by AGM batteries with the same specifications.

When installing a battery of a different size or a different battery type, this change in vehicle data must be programmed into the vehicle data in accordance with specifications.

Programming system:

- Battery retrofitting

cardiagn.com

12 00 ... Instructions for removal and replacement of control units

Important!

- Disconnecting the vehicle battery will cancel the fault memories of control units. Consequently, before disconnecting the car's battery, always interrogate the fault memories. Investigate stored faults and, once any faults have been remedied, cancel the fault memory.
- Control unit plugs should only ever be connected and disconnected while the ignition is turned off.
- The removal and installation of components, relays, fuses etc. can cause faults to be stored in fault memories capable of self diagnosis. Always interrogate the fault memories after completing work on the electrical system.
- Investigate stored faults and, once any faults have been remedied, cancel the fault memory.
- If necessary, initialise power window regulator Initialise power window regulator

On replacement of the DME/DDE control unit note the following:

- In every case use the diagnosis system to read out the hardware/software version of the corresponding control unit.
  Comply with the diagnosis system instructions for the encoding and programming work operations.
  On vehicles with an electronic immobiliser, comply with the diagnosis system instructions.
- In every control unit certain mean values are stored that are the basic values. The control unit receives different input values according to the engine condition. The teachable system compares the input values against the stored basic values and then forms the associated control commands. The control commands are forwarded to the corresponding actuators.
- When the DME control unit is de-energized for a long period (over one hour), the teachable system then loses the stored values. When a deleted control unit is returned to service or a new control unit is installed, the teachable system itself must read in and store the input value of the associated engine as new basic values.
- This process may cause uneven idle and faults in coasting mode after starting. Depending on the engine characteristics, it may take some time until all values have been compared with the engine condition.
- Therefore, comply with the following procedure before replacement or reinstallation of a DME/ DDE control unit is carried out:
  1. If possible, bring the engine up to its operating temperature prior to replacement of the control unit.
  2. Change control units and drive the vehicle with changing engine speeds.

cardiagn.com

12 00 ... Instructions for working on the ignition system

Caution!

Always switch off ignition before working on ignition system.

Use only test leads which have been approved and belong to these testing instruments (e.g. DIS Tester).

Comply with operating instructions of the respective testing instrument used.

Comply with the country-specific safety regulations.

Never touch components under current with engine running!

Comply with instructions of DIS tester.

Do not connect any suppression capacitors or inspection lamps to terminal 1 on the ignition coil.

Terminal 1 of ignition coil must not be connected to ground or battery positive lead.

If an alarm system is subsequently installed, lead of terminal 1 must not be used for start prevention.

When working on ignition system, always disconnect supply leads to ignition coils.

High tension! - High tension! Important!

Hazardous voltages occur at:

- Ignition lead
- spark-plug connectors
- spark plugs
- Ignition coil (high voltage at terminal 4 is approx. 40 kV)
- Lead of terminal 1 from ignition coil to DME control unit (high voltage approx. 350 V)

cardiagn.com

61 00 ... Notes on handling wiring harnesses and cables

The following applies in general:

To avoid damage, observe the following instructions:

- Avoid compressive and tensile loads
- To ensure professional repairs, perform repair work only with BMW-approved or recommended special tools and spare parts
- Make sure cables are laid without kinks or abrasions
- Ensure non-contacting routing at sharp-edged body parts; use edge protection if necessary
- Secure additionally laid cables/leads with cable ties

The following additionally applies:

Shielded lines

Interference radiation and interference resistance can lead to neutral zones at contact points in the shielding. Consequently, distinctions have to be drawn between the following types:

Coaxial lines

- Shielded coaxial cables RTK031 may only be repaired with a special crimping tool.
- For aerial lines only the bushing contact may be repaired.
- RG174 Lines and the bushing contact may not be repaired.

CVBS lines

- CVBS cables may not be repaired.
- CVBS cables must be replaced in their entirety.

HSD lines

- HSD cables may not be repaired.
- HSD cables must be replaced in their entirety.

Optical fibre cable:

Note:
Fibre-optic cables are coloured differently as follows:

- Green = **MOST** (**M**edia **O**riented **S**ystems **T**ransport) optical fibres
- Yellow = **ISIS** (**I**ntelligent **S**afety and **I**ntegration **S**ystem) optical fibres
- Orange=repair fibre-optic cables

Attention!

- Optical fibres are permitted to show only one junction point (bridge). Replace optical fibres if necessary
- Smallest permissible bending radius is 25 mm
- Avoid effects of heat ≥ 85 °

Treating cables and fibre-optic cables

FlexRay (twisted cables):

It is possible to repair the FlexRay. In the event of damage, the cables can be joined with conventional butt connectors and heat-shrink tubing.

cardiagn.com

Note:

- FlexRay lines may only reveal one separation point (bride); renew complete line if necessary.
- If possible, maintain twisted cable after repair.
- After repairs, twist cables as close as possible to the connector/separation point.
- Twisting must be as symmetrical as possible.

Airbag lines:

Repairing airbag cables

Ribbon cables:

Repairing ribbon cables

Replacing wiring harnesses

Repair wiring harnesses mainly cover the full equipment of the vehicle. If certain optional equipment is not installed in the vehicle, note the following:

- If necessary, secure the remaining connectors.
- If necessary, seal the remaining connectors outside the vehicle interior, for example, with butyl tape in such a way that moisture ingress can be eliminated permanently.
- If necessary, repin the connector of the repair wiring harness.

Note:
Repair wiring harnesses can be equipped with an **additional socket housing** (30-pin, for example), **which was not provided on the previous vehicle-side wiring harness**. This socket housing also cannot be found in the wiring diagram.

Procedure

The separation point between the vehicle-side wiring harness and the repair wiring harness is located **in the vehicle interior** (in the footwell, for example):

- Cut the additional socket housing and connect the lines to the vehicle-side wiring harness using a butt connector.
- Alternatively, a suitable pin housing can be fitted on the vehicle-side wiring harness and connected to the additional socket housing.

  However, this is permitted only if the following conditions are met:

  - Carpets must not protrude visibly or become deformed due to the installation of the additional plug connection.
  - It must be possible to install the adjacent components (for example, trims, trim panels, etc.) correctly after installing the additional plug connection.
  - All the attachment points of the adjacent components (for example, trims, trim panels, etc.) must engage correctly.
  - There must be no rattling noise due to the installation of the additional plug connection.
  - The additional plug connection must not damage the adjacent components/wiring harnesses, etc..

The separation point between the vehicle-side wiring harness and the repair wiring harness is located **outside the vehicle interior** (in the

cardiagn.com

wheel arch, for example):

- Cut the additional socket housing and connect the lines to the vehicle-side wiring harness using a butt connector.
- **Using the additional socket housing is not permitted with a separation point outside the vehicle interior.**

cardiagn.com

12 00 ... Notes/information on start assistance (jump starting)

Do not start the engine with help of starting sprays.

Preparation:

Conform with the following when starting the engine with a jump starting cable.

- Ensure that the jump starting cable wires are of appropriate cross-section size.
- Only use fuse-protected jump starting cables.
- Check whether the current-supplying battery has 12 V voltage.
- If the engine is started from the battery of another vehicle, ensure that there is no contact between the bodies of both vehicles.

Important!

> Never touch electrically live ignition system components: high voltage - danger of injury!

If the battery in the vehicle supplying power is weak, start the engine of this vehicle and let it run at idling speed.

Operation:

It is essential to conform to the procedures so as to avoid injury to persons or damage to parts.

- Automatic transmission: select drive position ”P”, apply parking brake.
- Manual transmission: move gear lever to neutral position, apply parking brake.
- Ensure that the jump leads cannot get caught in rotating parts, e.g. fan.
- First connect both positive poles of the batteries with one jump starting cable (red).
- Use the battery positive terminal in the engine compartment for vehicles with the battery in the luggage compartment.
- Then use the second jump starting cable (black) to connect the negative post of the current-supplying battery with the earth/ground point (not the negative pole or the body) of the vehicle to be started.

Important!

> Do not connect the second jump starting cable (black) with the negative pole of the battery in the vehicle to be started. Produced gas could be ignited by sparks.

Risk of explosion!

After the engine of the vehicle to be started has fired, first disconnect the jump starting cable between the negative pole and the earth/ground point. Then remove the starting cable from the positive poles.

cardiagn.com

00 Safety information for working on vehicles with automatic engine start-stop function (MSA)

Warning!

If the engine hood/bonnet contact is pulled upwards (workshop mode), the information "switch closed" is output. The automatic engine start-stop function is active.

An automatic engine start is possible.

Observe safety precautions when working on MSA vehicles.

Before carrying out practical work on the engine, always ensure that the MSA functionality is deactivated so as to prevent automatic engine starting while work is being carried out in the engine compartment.

MSA function is deactivated by:

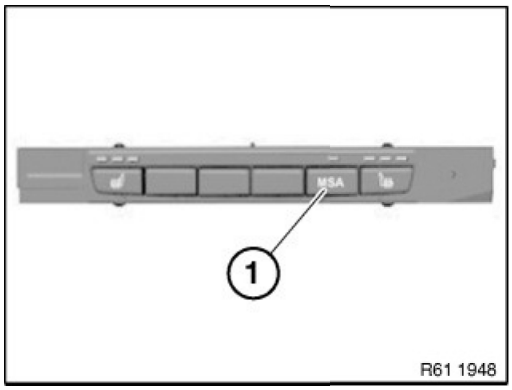

- Deactivate MSA by means of button (1) in passenger compartment
- Open seat belt buckle and driver's door

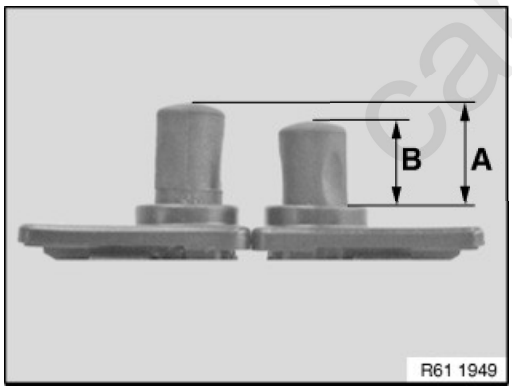

- Open engine bonnet/hood and ensure that engine hood/bonnet contact is not in workshop mode
  - Workshop mode

    A = 10 mm
  - Basic setting (engine hood/bonnet open)

    B = 7 mm

  To make sure that the engine hood/bonnet contact is at the basic setting, if necessary press the hood/bonnet contact up to the limit position before starting work and slowly release.

When working with diagnosis tools:

- Observe instructions in diagnosis tool

cardiagn.com

Note:
For further information on automatic engine start-stop function (MSA):

- Refer to the Service Information (bulletin) (for manual transmissions) Service Information (bulletin) 61 01 07 335
- Refer to the Service Information (bulletin) (for automatic transmissions or twin-clutch gearboxes) Service Information (bulletin) 61 01 10 629

cardiagn.com

61 00 ... Safety information on handling hybrid cars

1. *Qualification:*
   All repair work on high-voltage components may **only be performed by specially trained personnel** (qualification: Work on high-voltage inherently save vehicles) must be performed by qualified technicians. Each hybrid car requires additional vehicle specific training with training achievement controls.
   Required training is offered by the BMW Training Academy.
2. *Identification:*
   Observe **warning notices** on high-voltage components. When replacing individual high-voltage components, check if warning stickers are present. Independently attaching warnings is only allowed on the locations provided for them. Use only approved and appropriately identified original new parts.
3. *Rules of conduct/protective measures:*
   - Note operating instructions for handling high-voltage battery units.
   - Do not under any circumstances touch open high-voltage cables and high-voltage components on damaged vehicle before shutting down the high-voltage electrical system.
   - In the event of damage (mechanical, thermal) transition metal oxides, carbon, electrolyte solvents and their products of decomposition may be released.
     Suitable acid-resistant protective clothing/equipment must therefore be used when handling the vehicle!
     - Hand protection: Gloves
     - Eye protection: Safety goggles

     Damaged high-voltage battery units must be stored in an acid-resistant pan in a location in the open that is protected against the weather (sun, rain) and secured against unauthorised access. Do not inhale escaping gasses.
   - Prevent escaping substances from entering drains, pits and the sewer system.
   - Collect any material that is discharged and have it disposed of according to the work instruction, wear acid-resistant protective clothing when doing so.
   - Notify the fire brigade if fire breaks out, clear the area immediately and make accident scene safe. Attempt to extinguish the fire without putting persons in danger (suitable extinguishant: water and water foam).
   - A cut 2nd emergency separation point must be repaired with a butt connector.
4. *Measures before starting work:*
   - Each job on the vehicle must be assigned by appropriately trained personnel. Before work is started, this electrician must place the vehicle in the operating condition required to perform the relevant activity. The qualified personnel's instructions and directions absolutely must be followed. **No work may be carried out without this qualified personnel being consulted first.**
   - It is **not** permitted to work on the high voltage system or on high voltage components while the engine is running.
   - The readiness to drive must be ended before shutting off the voltage of the high-voltage system. The readiness to drive is ended when the driver is absent only under the following conditions:
     1. seat belt buckle unlocked **and**
     2. the driver's door is open **and**
     3. no brake activated **and**
     4. the accelerator pedal is not activated **and**
     5. speed < 3 km/h (2 mph)
   - Work on live high-voltage components is expressly prohibited. Before each operation on the high-voltage system, the system must be isolated from the power supply by qualified personnel (high-voltage safety connector Off) and secured against unauthorised recommissioning (padlock).
   - After each deactivation of the high-voltage system, it is essential to observe a **waiting period** of at least **10 seconds** prior to further work.
   - Before beginning work, it is mandatory to check that the equipment is de-energised and is protected against being energised again.
     Work is only permitted to begin if:
     1. Corresponding display in the KOMBI **High-voltage system deactivated** or

     When a high-voltage warning is active (indicator light, Check Control, etc.), it is essential to determine and eliminate the cause of this warning via the diagnosis system before continuing with any other work.
     If it cannot be definitively established that the equipment is de-energised, work is not permitted to begin. **Danger to life!** Before work begins, a qualified electrician (1000 V AC) must verify that the

cardiagn.com

system is de-energised using appropriate measuring devices and procedures.
=> In this case, Technical Support must be contacted!

- Do not perform any work on the vehicle while it is charging. Before starting work, disconnect the charging cable from the vehicle.
  Battery charging may result in heating of the high-voltage battery unit. This heating may lead to sporadic launches of the electric fan (switch-on request from the electric fan). Therefore, work in the vicinity of the electric fan during the charging procedure is prohibited. Ensure freedom of movement of the battery charge lines in the vicinity of the electric fan.

5. *Measures during/after activities:*
   - Identifiable mechanical damage to or tampering with high-voltage components must be reported immediately to the qualified personnel in charge.
   - When carrying out any work on the high-voltage system, it is prohibited to drive externally all the drivetrain components (wheels, gearbox, drive shafts, etc.).
   - *E72 only:* When the "Power Electronic Box Cover" is removed, the high-voltage system is not permitted to be activated. The high-voltage service disconnect must only be used when the "Power Electronics Box Cover" is completely installed.
   - High-voltage cables (orange coating) and their connectors and stop parts **may not** be repaired. If damaged, a cable must always be replaced completely.
   - When working in the vicinity of high-voltage components (identified accordingly with warning stickers and orange-coloured coating), protect these components against damage.
   - The specified work steps in the repair instructions must be adhered to exactly.
   - High-voltage components and their holders must be screwed/bolted to the defined tightening torque. Tightening torques and tightening specifications must be observed.
   - Connecting high-voltage components to body ground is crucial to safety for reasons of equipotential bonding. For this reason, it is prohibited to operate any high-voltage components without them being correctly connected to body ground. The measurements (insulation/potential equalisation measurement) are performed automatically by the vehicle. Manual measurement is not therefore necessary.
     For a correct earthing connection, the retaining elements of high-voltage components must not be painted. Follow further painting notes.
   - Removed high-boltage battery units must be stored in a manner that protects them from misuse and damage.
   - Damaged or warning stickers that are no longer legible on high-voltage components must always be replaced.
6. *Potential compensation:*
   Equipotential bonding lines, high-voltage cables and the battery negative lead to the EME are fitted with safety screws.
   - Clean contact faces and have then checked by a second person.
   - Tighten down screws/bolts to specified torque.
   - Have tightening torque checked by a second person.
   - Both persons must document that the work has been carried out correctly in the vehicle records.

cardiagn.com

61 13 ... Unlocking and disconnecting various plug connections in electrical and hybrid vehicles

Attention!

Observe the following instructions for handling high-voltage plug connections:

- Damaged high-voltage plug connections must be replaced completely. Repair is not permitted.
- Dirt contamination must be removed before opening the plug connection.

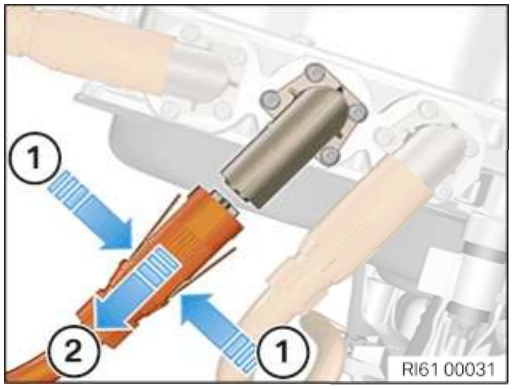

Disconnect the Hirschmann high-voltage connector:

Press the lock (1) on the left and right on the connector in the direction of the arrow.

Pull off connector (2) in direction of arrow.

Attention!

Connector (2) is difficult to pull off.

In the event of damage to high-voltage connector (2), the complete high-voltage cable must be replaced!

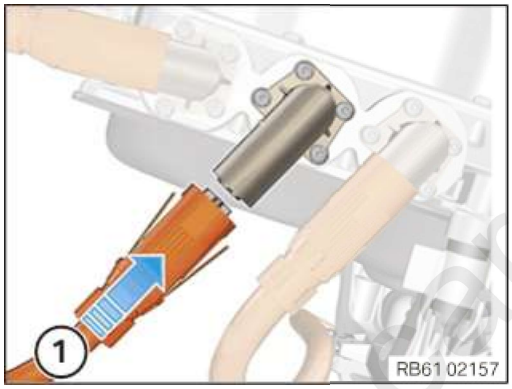

Connect the Hirschmann high-voltage connectors:

Slide the connector (1) on in the direction of the arrow.

Note:
Connector (2) must lock audibly.

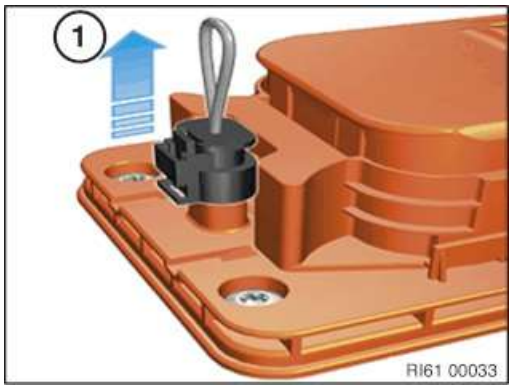

Disconnect the Kostal high-voltage connector:

Unlock and disconnect high-voltage interlock loop (1).

cardiagn.com

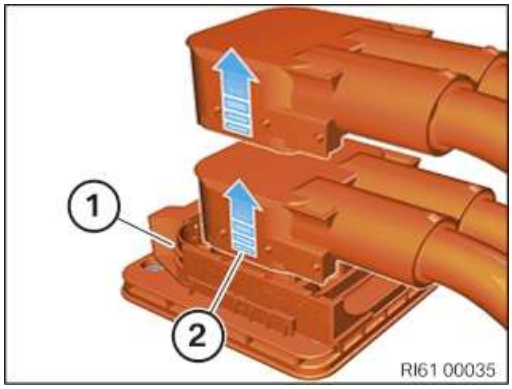

Push the lock (1) fully to the front.

Lift the connector (2) and remove it entirely.

Attention!

Plug connection (3) is difficult to pull off.

The connector (2) must be completely pulled off the opposite housing in one step. Damage may be caused to contact protection if connector is only partly pulled off and then closed again!

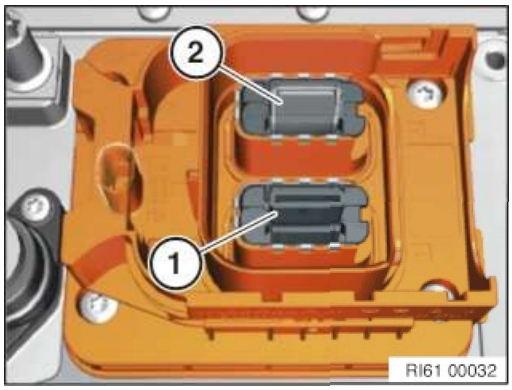

Check the Kostal high-voltage connector and connection for damage:

Check the touch protection for damage and correct positioning (1).

Warning!

Do not touch unprotected connector (2)!

If the contact protection (1) has been pushed to the bottom (2), the high-voltage connector must be refitted.

If contact protection (1) remains in bottom position (2) after reinstallation, the contact protection is faulty and the component must be replaced!

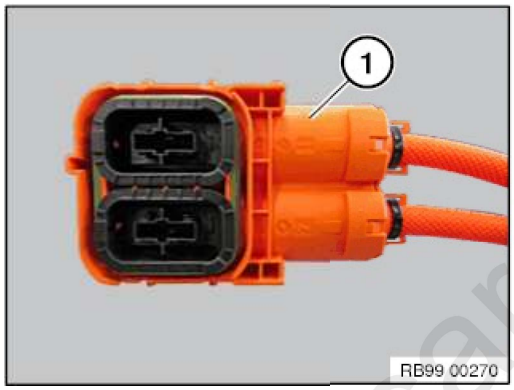

Check the high-voltage connector (1) for damage.**Warning!**

In the event of damage to the high-voltage connector (1), the complete high-voltage cable must be replaced!

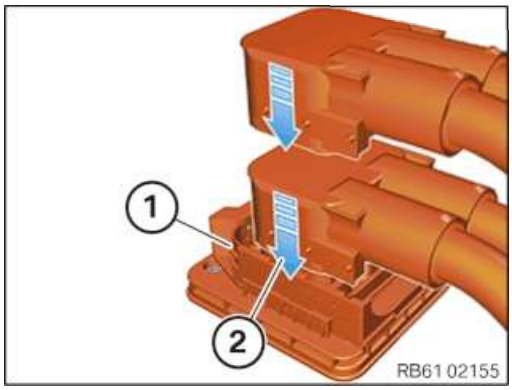

Connect the Kostal high-voltage connector:

Connect the connector (2) in one single movement to the counter-housing.

Push the lock (1) fully to the rear.

Attention!

Plug connection (3) must be correctly locked by lock (2), otherwise there is a risk of damage.

cardiagn.com

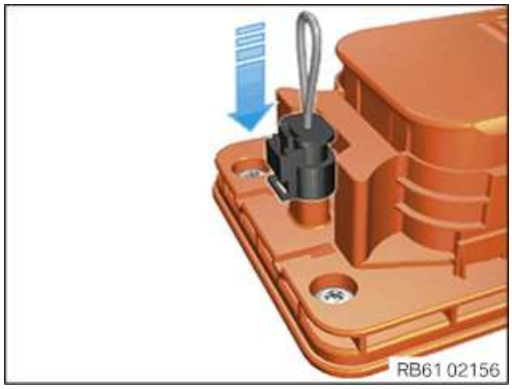

Connect the connector for the high-voltage interlock.

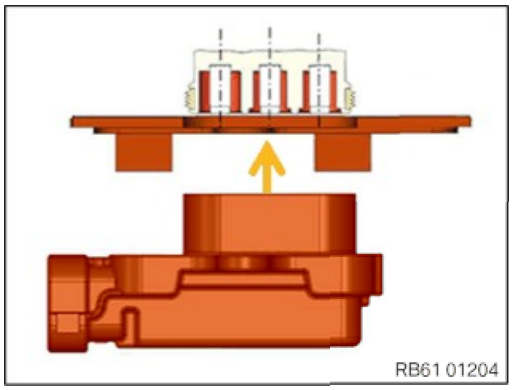

Three-phase high-voltage connector:

Connect and disconnect the connector straight.

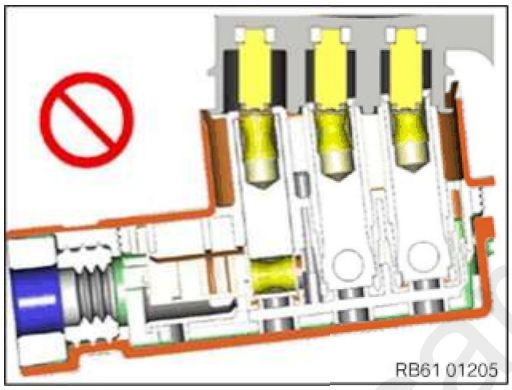

Attention!

The system is designed to only offer limited protection against damage caused by connectors that are inserted at an angle.

Increased tilted connections will increase the connecting force and the risk of danger.

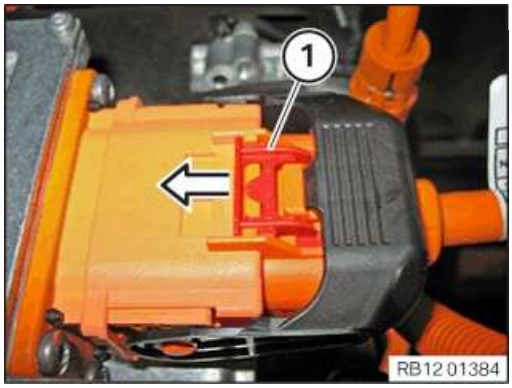

Disconnect the high-voltage connector from the high-voltage connection of the KLE:

Slide lock (1) in direction of arrow up to stop.

cardiagn.com

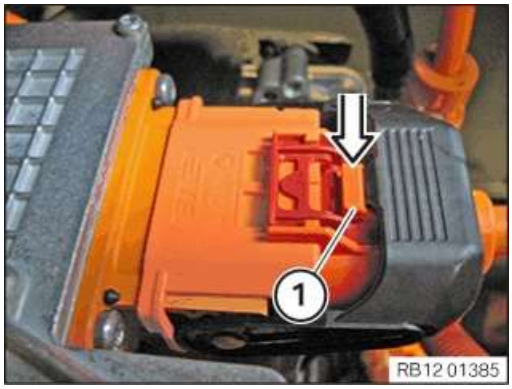

Press lock (1).

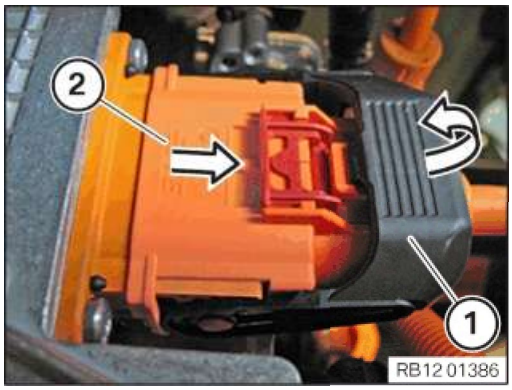

Open the lock (1) completely and disconnect the connector (2).

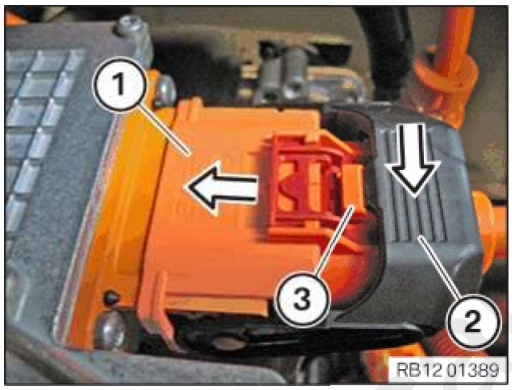

Connect the high-voltage connector to the high-voltage connection of the KLE:

Connect the connector (1) to the limit position and close the lock (2).

Attention!

Lock (2) must snap audibly into place.

The retaining lug of the lock (2) must be positioned completely under the lock (2).

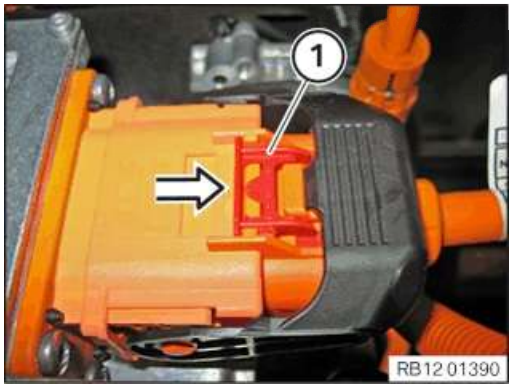

Slide the lock (1) on to the stop in the direction of the arrow.

cardiagn.com

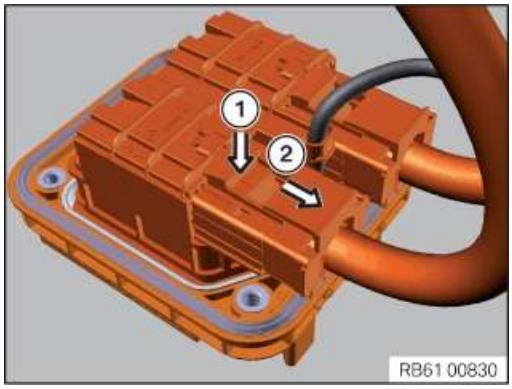

High-voltage connector on the high-voltage connection of the high-voltage battery unit:

Press down unlocking (1) in direction of arrow and pull off connector in direction of arrow (2).

Attention!

Contact protection is no longer provided in the event of a damaged connector housing.

In this case, contact technical support.

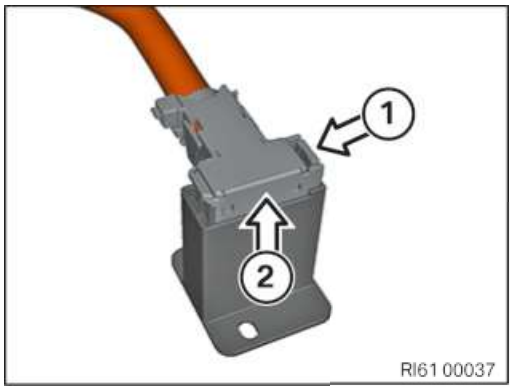

High-voltage connector on the cell module I01:

Press unlocking device (1) together and pull off connector upwards (2).

Attention!

Contact protection is no longer provided in the event of a damaged connector housing.

In this case, contact technical support.

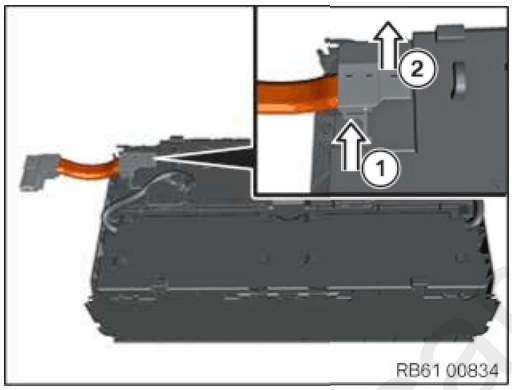

High-voltage connector on the cell module (cell module connecting line):

Press unlocking (1) in direction of arrow and pull off connector in direction of arrow (2).

Attention!

Contact protection is no longer provided in the event of a damaged connector housing.

In this case, contact technical support.

cardiagn.com