C O N T E N T S

Sections

Getting to know your vehicle 1

Driving 2

Your comfort 3

Maintenance 4

Practical advice 5

Technical specifications 6

Alphabetical index 7

0.4

Section 1: Getting to know your vehicle

Keys, radio frequency remote control: general information . . . 1.2
Locking and unlocking the doors . . . 1.5
Opening and closing the doors . . . 1.6
Engine immobiliser system . . . 1.7
Front headrests . . . 1.8
Front seats. . . . 1.9
Steering wheel, Clock . . . 1.10
Seat belts. . . . 1.11
Methods of restraint in addition to the front seat belts. . . . 1.15
Side protection devices . . . 1.19
Additional methods of restraint . . . 1.20
Child safety: general information . . . 1.21
    mounting a child seat . . . 1.24
    fitting a child seat . . . 1.26
    deactivating, activating the front passenger airbag . . . 1.32
Rear-view mirrors . . . 1.35
Driving position . . . 1.36
Warning lights . . . 1.40
Displays and indicators . . . 1.43
On-board computer . . . 1.45
Exterior lighting and signals. . . . 1.49
Adjusting the headlight beam height . . . 1.51
Audible and visual signals . . . 1.52
Windscreen washer/wiper, De-icing . . . 1.53
Fuel tank (filling with fuel) . . . 1.56

KEYS, RADIO FREQUENCY REMOTE CONTROL: general information (1/2)

Key *A*

1 Coded key for ignition switch, doors and fuel filler cap.

The key must not be used for any function other than those described in the handbook (removing the cap from a bottle, etc.).

Radio frequency remote control *B*

2 Locking the doors and tailgate.
3 Unlocking the doors and tailgate.
4 Coded key for ignition switch, driver's door and fuel filler cap.

Advice

Avoid leaving the remote control in hot, cold or humid areas.

Driver's responsibility

Never leave your vehicle with the keys inside when leaving a child (or animal) in the car, even for a short period.

The reason for this is that the child may endanger himself or others by starting the engine, activating equipment such as the window winders for example, or locking the doors.

Risk of serious injury.

The remote control unit operating range

This varies according to the environment. It is therefore important when handling the remote control to ensure that you do not lock or unlock the vehicle by inadvertently pressing the buttons.

Interference

The presence of certain objects (metal objects, mobile telephones, or an area with strong electromagnetic radiation, etc.) close to the key may create interference and affect the operation of the system.

Replacement and additional keys or remote controls.

You must only contact an approved Dealer:

– If you need to replace a key it will be necessary to take the vehicle and all of its keys to an approved Dealer in order to initialise the system.

– depending on the vehicle, you have the option of using up to four remote controls.

Remote control unit failure

Make sure that the correct battery type is being used, and that the battery is in good condition and inserted correctly. These batteries should have a service life of approximately two years.

Refer to Section 5: “Radio frequency remote control: batteries” for the battery changing procedure.

RADIO FREQUENCY REMOTE CONTROL: use

Doors are locked and unlocked using remote control unit ***B***.

It is powered by a battery which must be replaced (refer to the information on the “Radio frequency remote control: batteries” in Section 5).

Locking the doors

Press locking button ***1***.

The hazard warning lights and side indicator lights **flash twice** to indicate that the doors have locked.

If a door or the tailgate is open or not properly shut, the doors and tailgate lock then quickly unlock and the hazard warning lights and side indicator lights do not flash.

Unlocking the doors

Press unlocking button ***2***.

The hazard warning lights and side indicator lights **flash once** to indicate that the doors have unlocked.

Manual locking

From the outside

Unlock the doors using the remote control (refer to information on the “Radio frequency remote control: use” in Section 1) or using the key in one of the door locks.

Depending on the vehicle, the key locks and unlocks the driver’s door or all four doors.

From the inside (depending on vehicle)

Push in button ***1*** to lock and lift button ***1*** to unlock.

Electric central locking

Depending on the vehicle, it can be used to simultaneously lock or unlock the doors and luggage compartment.

Lock or unlock the doors by pressing switch ***2***.

The front door mechanism cannot be locked if the door is open.

Child safety

To make it impossible for the rear doors to be opened from the inside, move lever ***3*** on each door and check from the inside that the doors are securely locked.

Driver’s responsibility

If you decide to keep the doors locked when you are driving, remember that it may be more difficult for those assisting you to gain access to the passenger compartment in the event of an emergency.

Opening the doors manually from the outside

With the doors unlocked (refer to the information on “Locking/unlocking the doors” in Section 1).

Front: Place your hand behind handle ***1*** and pull it towards you..

Rear (manual opening)**:** lift unlocking button ***2*** from the inside and move the door handle.

Opening the doors from the inside

Front: pull handle ***3***.

Rear: from the inside, lift unlocking button ***2*** and pull door handle ***3***.

Lights-on reminder buzzer

If you have left the lights on after switching off the ignition, a warning buzzer will sound when a front door is opened (to prevent the battery from discharging, etc.).

Driver’s responsibility when parking or stopping the vehicle

Never leave an animal, child or adult who is not self-sufficient alone on your vehicle, even for a short time.
They may pose a risk to themselves or to others by starting the engine, activating equipment such as the electric windows or by locking the doors.
Also, in hot and/or sunny weather, please remember that the temperature inside the passenger compartment increases very quickly.
RISK OF DEATH OR SERIOUS INJURY.

As a safety precaution, the doors should only be opened or closed when the vehicle is stationary.

ENGINE IMMOBILISER

This prevents the vehicle being driven by anyone not in possession of the vehicle's coded ignition key.

Operating principle

The vehicle is automatically protected a few seconds after the ignition is switched off.

If the vehicle does not recognise the coded ignition key, tell-tale light ***1*** will flash continuously and the engine cannot be started.

System operation

When the ignition is switched on, tell-tale ***1*** lights up continuously for approximately three seconds and then goes out. The vehicle has recognised the code. You can then start the engine.

Vehicle protection

A few seconds after the ignition has been switched off, tell-tale light ***1*** will flash constantly.

The vehicle will only be protected after the ignition has been switched off.

Operating faults

After the ignition has been switched on, if warning light ***1*** continues to flash or remains continuously lit, there is a system operating fault.

In all cases, it is **essential** to contact an approved dealer as only they are qualified to repair the engine immobiliser.

If the coded ignition key is faulty, use the second key (supplied with the vehicle).

Any unauthorised work carried out on the engine immobiliser (computers, wiring, etc.) could be dangerous. Work must be carried out by qualified personnel.

FRONT HEADRESTS

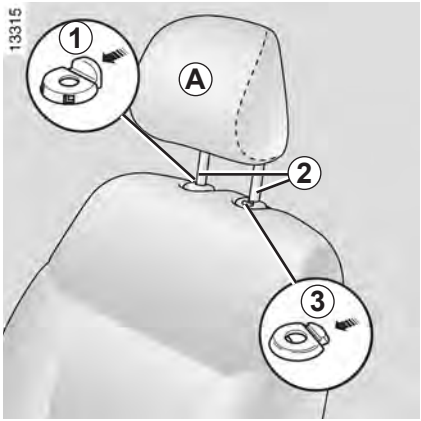

Adjusting the height of headrest *A*

Press tab ***1*** and simultaneously slide the headrest to the required position.

To raise the headrests *A* or *B*

Depending on the vehicle, press tabs ***1*** and ***2*** on the head restraint guides or on button ***3*** or ***4*** and lift the headrest to release it (tilt the seatback backwards if necessary).

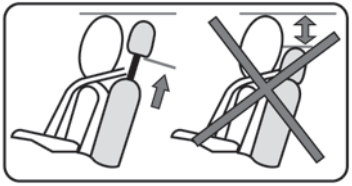

The headrest is a safety component. Ensure that it is fitted and in the correct position: the top of your head should be in line with the top of the headrest.

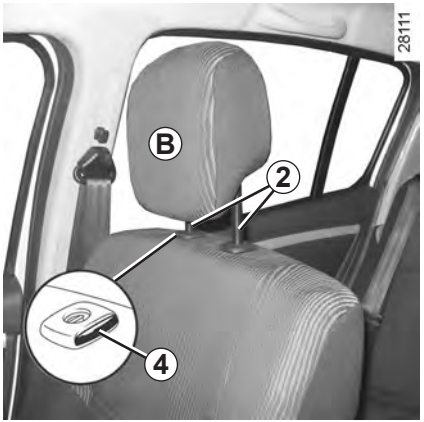

To refit headrests *A* or *B*

Insert headrest rods ***2*** into the holes (tilt the seatback backwards if necessary). Push the headrest in until it locks in position.

Headrest ***B*** is fixed and its height cannot be adjusted.

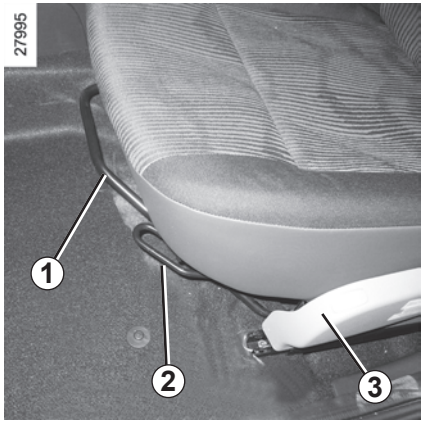

To move forwards or backwards

Lift bar ***1*** to release.
Release the bar in the desired position and ensure it locks in place properly.

To raise or lower the driver's seat surface

Depending on the vehicle, lift lever ***2***, adjust the seat base to the desired height, then release the lever.

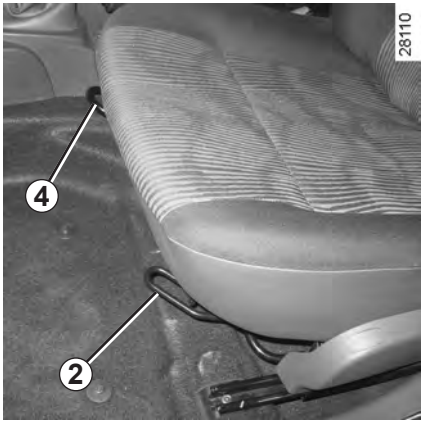

Heated seats

Depending on the vehicle, with the ignition on, press switch ***3***.

The system, which has a thermostat, decides whether or not the heating is needed.

To tilt the seatback

Move handle ***5*** and tilt the seatback to the desired position.

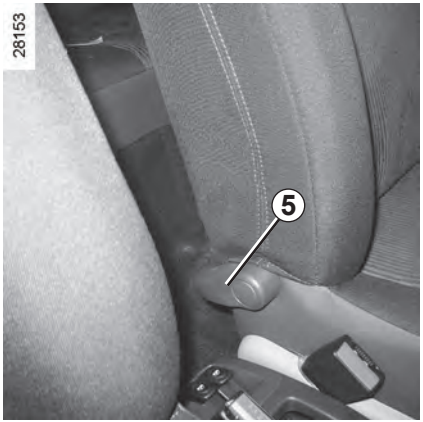

For safety reasons, carry out any adjustments when the vehicle is not being driven.

We would advise you not to recline the seatbacks too far to ensure that the effectiveness of the seat belts is not reduced.

Make sure that the seatbacks are correctly locked in place.

Nothing should be placed on the floor (area in front of driver) as such objects may slide under the pedal during braking manoeuvres, thus obstructing its use.

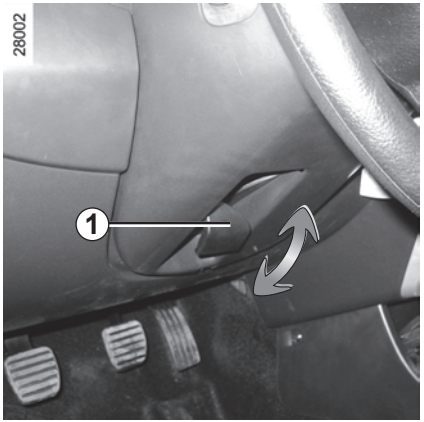

Adjusting the steering wheel

Depending on the vehicle version, the height of the steering wheel can be adjusted. Lift lever ***1*** and place the steering wheel in the desired position; lower the lever to lock the steering wheel.

Make sure that the steering wheel is correctly locked.

For safety reasons, only adjust the steering wheel when the vehicle is stationary.

Resetting the clock

With the ignition on, select display ***2*** showing the total mileage and clock.

There are two ways to set the time:

– Pressing and holding button ***3*** allows you to scroll through the hours and minutes quickly;

– short presses on button ***3*** allow you to set the time minute by minute.

If the electrical supply is cut (battery disconnected, broken supply wire, etc.), the clock will lose its time setting.

The clock must be reset.

For your safety, we recommend that you do not adjust the clock while driving.

SEAT BELTS (1/4)

Always wear your seat belt when travelling in your vehicle. You must also comply with the legislation of the particular country you are in.

Make sure that the rear bench seat is locked in position correctly so that the rear seat belts will operate efficiently. Refer to the information on the “Rear bench seat: functions” in Section 3.

Incorrectly adjusted or twisted seat belts may cause injuries in the event of an accident.
Use one seat belt per person, whether child or adult.
Even pregnant women should wear a seat belt. In this case, ensure that the lap belt is not exerting too much pressure on the abdomen, but do not allow any slack.

Before starting, adjust your driving position and then have each occupant adjust their seat belt to ensure optimum protection.

Adjusting your driving position
(depending on the vehicle)

- **Sit well back in your seat** (having removed your coat or jacket etc.). This is essential to ensure your back is positioned correctly;
- **adjust the distance between the seat and the pedals.** Your seat should be as far back as possible while still allowing you to depress the clutch pedal fully. The seatback should be adjusted so that your arms are slightly bent when you hold the steering wheel;
- **adjust the position of the steering wheel**.
- **adjust the position of your headrest.** For the maximum safety, your head must be as close as possible to the headrest;
- **Adjust the height of the seat.** This adjustment allows you to select the seat position which offers you the best possible view.

Adjusting the seat belts

Sit with your back firmly against the seatback.

Shoulder strap ***1*** should be as close as possible to the base of the neck but not on it.

Lap belt ***2*** must be worn flat over the thighs and against the pelvis. The seat belt must be worn as close to the body as possible. i.e.: avoid wearing heavy clothing or keeping bulky objects under the belts, etc.

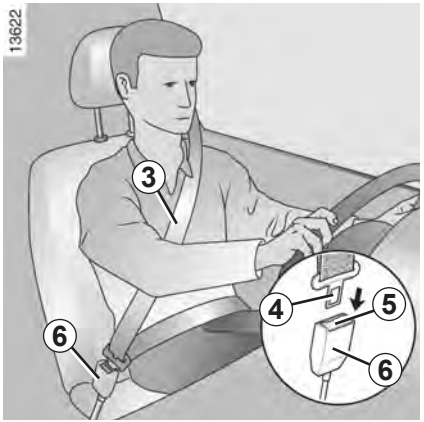

To fasten

Unwind the belt **slowly and smoothly** and ensure that buckle ***4*** locks into catch ***6*** (check that it is locked by pulling on buckle ***4***). If the belt jams, allow it to return slightly before attempting to unwind it again.

If your seat belt is completely jammed, pull slowly, but firmly, so that just over 3 cm unwinds. Allow it to return slightly before attempting to unwind it again.

If there is still a problem, contact an approved dealer.

Adjusting the front seat belt height

(depending on the vehicle)

Move button ***7*** to select the position you require so that chest strap ***3*** is worn as described above.

Make sure that the seat belt is locked in position correctly after you have adjusted it.

Unlocking

Press button ***5*** on catch ***6***; the seat belt is wound up by the inertia reel. Guide the buckle to facilitate this manoeuvre.

Seat belt reminder light

Depending on the vehicle, it comes on when the engine is started if the driver's seat belt is not fastened. When the vehicle is being driven, it comes on and a beep sounds for approximately 2 minutes until the driver's seat belt is fastened.

Rear central seat belts *7*
(depending on the vehicle)

Unwind the belt slowly from its housing ***8***.

Click the buckle into black catch ***9***.

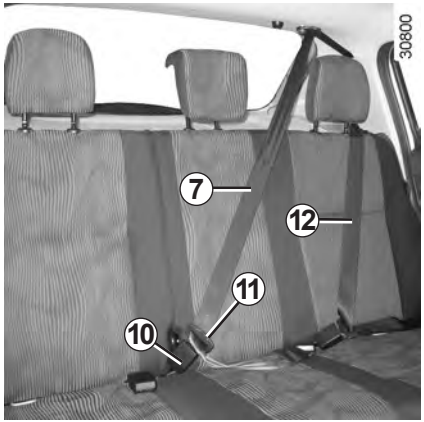

Fasten sliding buckle ***11*** into red catch ***10***.

Rear side seat belts *12*

The belts are locked, unlocked and adjusted in the same way as the front belts.

Rear lap belt with manual adjustment *13*
(depending on the vehicle)

The strap should be worn flat over your thighs and against your pelvis.
The belt should be worn so that it is as close as possible to your body, i.e. avoid wearing heavy clothing or keeping bulky objects under the belts.
To tighten, pull on free section ***14*** of the belt.
To loosen, tilt adjusting buckle ***16*** perpendicular to the seat belt, press the buckle on the ring side while pulling lap belt ***15***.

Check that the rear seat belts are positioned and operating correctly each time the rear seats are moved.

SEAT BELTS (4/4)

The following information applies to the vehicle's front and rear seat belts.

– No modification may be made to the component parts of the originally fitted restraint system: belts, seats and their mountings. For special operations (e.g. fitting child seats), please contact an authorised dealer.

– Do not use devices which allow any slack in the belts (e.g. clothes pegs, clips, etc.): a seat belt which is worn too loosely may cause injury in the event of an accident.

– Never wear the shoulder strap under your arm or behind your back.

– Never use the same belt for more than one person and never hold a baby or child on your lap with your seat belt around them.

– The belt should never be twisted.

– Following an accident, have the seat belts checked and replaced if necessary. Always replace your seat belts as soon as they show any signs of wear.

– Make sure that the buckle is inserted into the appropriate catch.

– When refitting the rear bench seat, take care that the seat belts are correctly positioned so that they can be used properly.

– Ensure that no objects are placed in the area around the seat belt catch as they could prevent it from being properly secured.

– Make sure the seat belt catch is properly positioned (it should not be hidden away, crushed or flattened by people or objects).

SYSTEMS IN ADDITION TO THE FRONT SEAT BELTS (1/4)

Depending on the vehicle, they are composed of:

– seat belt pretensioners;

– chest-level load limiters;

– air bags for the driver and front passenger.

These systems are designed to act independently or together when the vehicle is subjected to a frontal impact.

Depending on the severity of the impact, the system can trigger:

– seat belt locking;

– the seat belt pretensioner to hold the occupant in the seat, and the force limiter;

– the front air bag.

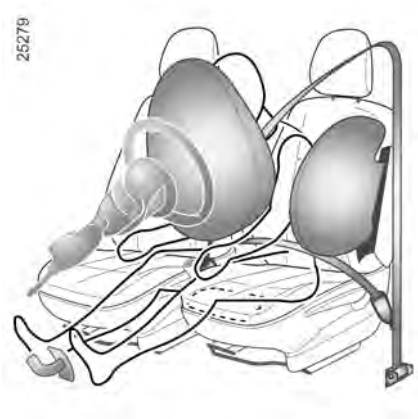

Pretensioner

With the ignition switched on, if the vehicle is subject to a significant frontal impact the system may, depending on the severity of the impact, trigger a piston which instantly retracts the seat belt.
The pretensioner holds the seat belt against the body, holding the occupant more securely against the seat, thus increasing the seat belt's efficiency.

– Have the entire restraint system checked following an accident.

– No operation whatsoever is permitted on any part of the system (air bags, electronic control units, wiring) and the system components must not be reused on any other vehicle, even if identical.

– To avoid premature triggering of the system which may cause injury, only qualified Network personnel are authorisedto work on the methods of restraint in addition to the front seat belt.

– The electric trigger system may only be tested by a specially trained technician using special equipment.

– When the vehicle is scrapped, contact an approved dealer for disposal of the pretensioner and airbag gas generators.

Load limiter

Above a certain level of impact force, this mechanism is used to limit the force of the belt against the body so that it is at an acceptable level.

The air bag system uses pyrotechnic principles. This explains why, when the air bag inflates, it will generate heat, produce smoke (this does not mean that a fire is about to start) and make a noise upon detonation. An air bag may inflate immediately, causing some minor, superficial grazing to the skin or other discomfort.

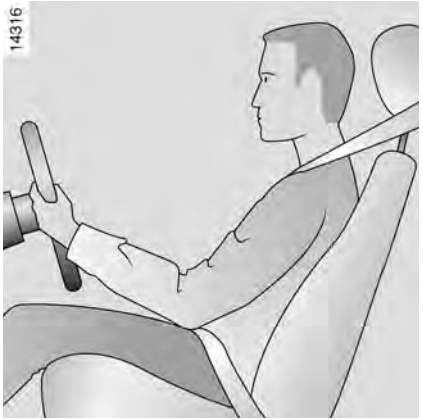

Driver's and passenger air bags

These may be provided for the driver and the front passenger seats.

The presence of this equipment is indicated by the words "Air bag" on the steering wheel and the dashboard, and a label on the base of the windscreen or on the sun visor.

Each air bag system consists of:

- an air bag and gas generator fitted on the steering wheel for the driver and in the dashboard for the front passenger;
- an electronic unit for system monitoring which controls the gas generator electrical trigger system;
- a special tell-tale light ;
- remote sensors.

Operation

This system is only operational when the ignition is switched on.

If a severe **frontal** impact occurs, the air bag(s) inflate(s) rapidly, cushioning the impact of the driver's head and chest against the steering wheel and the front passenger's head against the dashboard. The air bag then deflates immediately so that the passengers are not impeded in any way when they get out of the vehicle.

The air bag system uses pyrotechnic principles. This explains why, when the air bag inflates, it will generate heat, produce smoke (this does not mean that a fire is about to start) and make a noise upon detonation. In a situation where an air bag is required, it will inflate immediately and this may cause some minor, superficial grazing to the skin or other problems.

Operating faults

Warning light ***1*** will light up on the instrument panel when the ignition is turned on and then go out after a few seconds.

If it does not light up when the ignition is switched on, or comes on when the engine is running, there is a fault in the system.

In this case, a child seat MUST NOT be fitted to the front passenger seat.

Allowing any other passenger to sit in that seat is not recommended.

In these two cases, contact an approved dealer as soon as possible.

All of the warnings below are given so that the air bag is not obstructed in any way when it is inflated and also to prevent the risk of serious injuries caused by items which may be dislodged when the air bag inflates.

Warnings concerning the driver's air bag

– Do not modify the steering wheel or the steering wheel boss.
– Do not cover the steering wheel boss under any circumstances.
– Do not attach any objects (badge, logo, clock, telephone holder, etc.) to the steering wheel boss.
– You must not remove the steering wheel (such work must only be performed by trained personnel from our Network).
– When driving, do not sit too close to the steering wheel. Sit with your arms slightly bent (see the information on "Adjusting your driving position" in Section 1). This will allow sufficient space for the air bag to inflate properly and be fully effective.

Warnings concerning the passenger airbag: location *2*

– Do not attach or glue any objects (badge, logo, clock, telephone holder, etc.) to the dashboard in the proximity of the air bag housing.
– Do not place anything between the dashboard and the passenger (pet, umbrella, walking stick, parcels, etc.).
– The passenger must not put his or her feet on the dashboard or seat as there is a risk that serious injuries may occur. In general, all parts of the body should be kept away from the dashboard (knees, hands, head etc.).
– You should reactivate the passenger air bag as soon as you remove the child seat to ensure the protection of the front passenger in the event of an impact.

IT IS PROHIBITED TO FIT A REAR-FACING CHILD SEAT TO THE FRONT PASSENGER SEAT UNLESS THE RESTRAINT SYSTEMS IN ADDITION TO THE FRONT PASSENGER SEAT BELT HAVE BEEN DEACTIVATED.

(Refer to the information on "Deactivating the frontpassenger air bag" in Section 1).

Side air bags

These air bags may be fitted to the front seats and are deployed at the sides of the seats (door side) to protect the occupants in the event of a severe side impact.

Warnings concerning the side air bag

– **Fitting seat covers:** seats equipped with an air bag require covers specifically designed for your vehicle. Contact an approved dealer to find out if such covers are available from our Network. The use of any covers other than those designed for your vehicle (including those designed for another vehicle) may affect the operation of the air bags and reduce your protection.

– Do not place any accessories, objects, or even pets, between the seatback, the door and the internal fittings. Do not cover the seatback with objects such as clothes or accessories. This may prevent the air bag from operating correctly or cause injury when the air bag is deployed.

– No work or modification whatsoever may be carried out on the seat or internal fittings, except by qualified personnel from our Network.

ADDITIONAL METHODS OF RESTRAINT

All of the warnings below are given so that the air bag is not obstructed in any way when it is inflated and also to prevent the risk of serious injuries caused by items which may be dislodged when the air bag inflates.

The airbag is designed to complement the action of the seat belt. Both the airbags and seat belts are integral parts of the same protection system. It is therefore essential to wear the seat belt at all times. If seat belts are not worn, the occupants are exposed to the risk of serious injury in the event of an accident. It may also increase the risk of minor superficial injuries occurring when the airbag is deployed, although such minor injuries are always possible with airbags.

If the vehicle should overturn or suffer a rear impact, however severe, the pretensioners and air bags are not always triggered. Impacts to the underside of the vehicle, e.g. from pavements, potholes or stones, can all trigger these systems.

– No work or modification **whatsoever** may be carried out on any part of the driver or passenger air bag system (air bag, electronic unit, wiring, etc.), except by qualified personnel from our Network.

– To ensure that the system is in good working order and to avoid accidental triggering of the system which could cause injury, only qualified personnel from our Network may work on the air bag system.

– As a safety precaution, have the air bag system checked if your vehicle has been involved in an accident, or is stolen or broken into.

– When selling or lending the vehicle, inform the user of these points and hand over this driver's handbook with the vehicle.

– When scrapping your vehicle, contact your approved Dealer for disposal of the gas generator(s).

Carrying children

Children, and adults, must be correctly seated and strapped in for all journeys. The children being carried in your vehicle are your responsibility.

A child is not a miniature adult. Children are at risk of specific injuries as their muscles and bones have not yet finished growing. The seat belt alone would not provide suitable protection. Use an approved child seat and ensure you use it correctly.

To prevent the doors being opened, use the childproof locks (refer to the information on “Locking/unlocking the doors” in Section 1).

A collision at 30 mph (50 km/h) is the same as falling a distance of 10 metres. Transporting a child without a restraint is the equivalent of allowing him or her to play on a fourth-floor balcony without railings.
Never travel with a child held in your arms. In the event of an accident, you will not be able to keep hold of the child, even if you yourself are wearing a seat belt.
If your vehicle has been involved in a road accident, replace the child seat and have the seat belts and ISOFIX fittings checked.

Never leave a child unattended in the vehicle.

Check that your child is always strapped in and that the belt or safety harness used is correctly set and adjusted. Avoid wearing bulky clothing which could cause the belts to slacken.

Never let your child put their head or arms out of the window.

Check that the child is in the correct position for the entire journey, especially if asleep.

Using a child seat

The level of protection offered by the child seat depends on its ability to restrain your child and on its installation. Incorrect installation compromises the protection it offers the child in the event of harsh braking or an impact.

Before purchasing a child seat, check that it complies with the regulations for the country you are in and that it can be fitted in your vehicle. Consult an approved dealer to find out which seats are recommended for your vehicle.

Before fitting a child seat, read the manual and respect its instructions. If you experience any difficulties during installation, contact the manufacturer of the equipment. Keep the instructions with the seat.

Set a good example by always fastening your seat belt and teaching your child:
– to strap themselves in correctly;
– to always get in and out of the car at the kerb, away from busy traffic.

Do not use a second-hand child seat or one without an instruction manual.
Check that there are no objects in the vicinity of the child seat which could impede its operation.

Never leave a child unattended in the vehicle.

Check that your child is always strapped in and that the belt or safety harness used is correctly set and adjusted. Avoid wearing bulky clothing which could cause the belts to slacken.

Never let your child put their head or arms out of the window.

Check that the child is in the correct position for the entire journey, especially if asleep.

Rear-facing child seats

A baby's head is, proportionally, heavier than that of an adult and its neck is very fragile. Transport the child in this position for as long as possible (until the age of 2 at the very least). It supports the head and neck. Choose a bucket type seat for better side protection and replace it as soon as the child's head extends past the seat shell.

Forward-facing child seats

The child's head and abdomen need to be protected as a priority. A forward-facing child seat which is firmly attached to the vehicle will reduce the risk of impact to the head. Transport your child in a forward-facing seat with a safety harness or guard depending on the child's size. Choose a bucket type seat for better side protection.

Booster cushions

From 15 kg or 4 years, the child can travel using a booster seat, which will enable the seat belt to be adapted to suit his/her size and shape. The booster seat cushion must be fitted with guides to position the seat belt on the child's thighs rather than the stomach. It is recommended that you use a seat-back fitted with a belt strap guide which can be adjusted in terms of height to position the seat belt in the centre of the shoulder. It should never rest on the neck or over the arm. Choose a bucket type seat for better side protection.

Attachment via the seat belt

The seat belt must be adjusted to ensure that it is effective in the event of harsh braking or an impact.

Ensure that the strap paths indicated by the child seat manufacturer are respected.

Always check that the seat belt is correctly fastened by pulling it up, then pulling it out fully whilst pressing on the child seat.

Check that the seat is correctly held by moving it from side to side and back to front: the seat should remain firmly fixed.

Check that the child seat has not been installed at an angle and that it is not resting against a window.

Do not use the child seat if it may unfasten the seat belt restraining it: the base of the seat must not rest on the buckle and/or catch of the seat belt.

The seat belt must never be twisted or the tension relieved. Never pass the shoulder strap under the arm or behind the back.
Check that the seat belt has not been damaged by sharp edges.
If the seat belt does not operate normally, it will not protect the child. Consult an approved dealer. Do not use this seat until the seat belt has been repaired.

No modifications may be made to the component parts of the restraint system (belts, ISOFIX and seats and their mountings) originally fitted.

Attachment with the ISOFIX system

Authorised ISOFIX child seats are approved in accordance with regulation ECE-R44 in one of the three following scenarios:
– ISOFIX universal 3 point forwardfacing seat;
– ISOFIX semi-universal 2 point seat;
– specific.

For the latter two, check that your child seat can be installed by consulting the list of compatible vehicles.

Attach the child seat with the ISOFIX locks, if these are provided. The ISOFIX system allows quick, easy, safe fitting.

The ISOFIX system is composed of 2 rings for each rear side seat.

Before using an ISOFIX child seat that you purchased for another vehicle, check that its installation is authorised. Consult the list of vehicles which can be fitted with the seat with the equipment manufacturer.

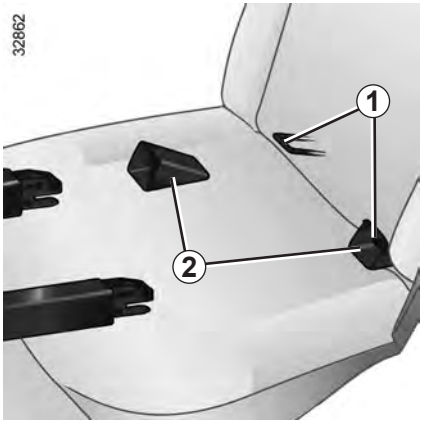

The two ISOFIX rings ***1*** are located between the seatback and the seat base and are clearly visible.

To ensure your child seat can be easily fitted and locked on rings ***1***, use access guides ***2*** on the child seat.

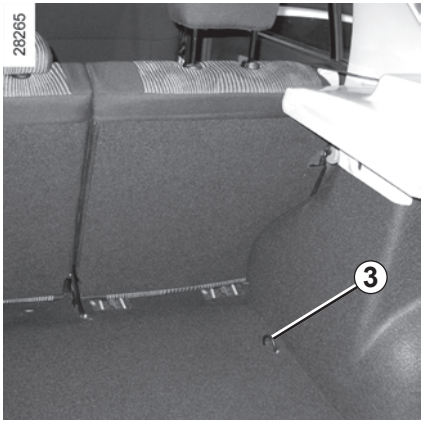

The third ring is used to attach the upper strap on some child seats.

Fix the hook of the strap onto ring ***3*** and pull the strap so that the seatback of the child seat comes into contact with the seatback of the vehicle seat.

It is essential to use the luggage compartment anchorage point ***3*** to attach the upper belt of the child seat.

It is forbidden to use other mounting points to attach this strap.

The ISOFIX anchorage points have been exclusively designed for child seats with the ISOFIX system. Never fit a different type of child seat, seat belt or other objects to these fittings.

Check that nothing is obstructing the anchorage points.

If your vehicle has been involved in a road accident, have the ISOFIX fittings checked and replace your child seat.

Some seats are not suitable for fitting child seats. The diagram on the following page shows you how to attach a child seat.

The types of child seats indicated may not be available. Before using a different child seat, check with the manufacturer that it can be fitted.

Fit the child seat in a rear seat wherever possible.

Check that when installing the child seat in the vehicle it is not at risk of coming loose from its base.

If you have to remove the headrest, check that it is correctly stored so that it does not come loose under harsh braking or impact.

Always attach the child seat to the vehicle even if it is not in use so that it does not come loose under harsh braking or impact.

In the front seat

The laws concerning children travelling in the front passenger seat differ in every country. Consult the legislation in force and follow the indications on the diagram on the following page.

Before fitting a child seat in this seat (if authorised):

– deactivate the front passenger air bag;
– lower the seat belt as far as possible;
– move the seat as far back as possible;
– gently tilt the seatback away from vertical (approximately 25°).

Do not change these settings after the child seat is installed.

RISK OF DEATH OR SERIOUS INJURY: before fitting a child seat in this seat, check that the air bag has been deactivated (refer to the information on “Deactivating the front passenger air bag” in Section 1).

In the rear side seat

A carrycot can be installed across the vehicle and will take up at least two seats. Position the child with his or her feet nearest the door.

Before installing a child seat in the ISOFIX anchoring points on a rear side seat, check that the seat belt buckles are not placed between the two ISOFIX anchorage points in this seat. If necessary, move the buckle for the seat concerned towards the centre of the vehicle.

Move the front seat as far forward as possible to install a rear-facing child seat, then move back the seat in front as far as it will go, although without allowing it to come into contact with the child seat.

For the safety of the child in the forward-facing seat, do not move the seat in front back past the middle of the runner, do not tilt the seatback too far (maximum of 25°) and raise the seat as much as possible.

Check that the forward-facing child seat is resting against the back of the vehicle seat and that the headrest of the vehicle is not obstructing its use.

Check that neither the child seat nor the child's feet prevent the front seat from locking into place. Refer to the information on the "Front seat" in Section 1.

Rear centre seat

A child seat may only be fitted in this seat if it is equipped with an inertia-reel seat belt. For any additional information, contact an approved dealer.

Vehicles without airbag or with airbag deactivated

28055

Check the status of the air bag before fitting a child seat or allowing a passenger to use the seat.

RISK OF DEATH OR SERIOUS INJURY: before installing a child/baby seat on the front passenger seat, check that the air bag has been deactivated (refer to “Deactivating the front passenger air bag” at the end of the paragraph).

Seat not suitable for fitting child seats.

Child seat attached using the belt

U Seat which allows a child seat with “Universal” approval to be attached by a seat belt.

UD Seat which **only** allows a **rear-facing seat** with “Universal” approval to be attached with a seat belt.

(1) Only if the seat is equipped with an inertia-reel belt.

Child seat attached using the ISOFIX mounting

Seat which allows an ISOFIX child seat to be fitted.

The rear seats are fitted with an anchorage point which allows a forward-facing ISOFIX child seat with universal approval to be fitted. The anchorage points are located under the luggage compartment carpet and are indicated by a marking.

The size of the ISOFIX child seat is indicated by a letter:

– A, B and B1: for forward-facing seats in group 1 (9 to 18 kg);
– C: rear-facing seats in group 1 (9 to 18 kg);
– D and E: shell seat or rear-facing seats in group 0 or 0+ (less than 13 kg);
– F and G: cots in group 0 (less than 10 kg).

Using a child safety system which is not approved for this vehicle will not correctly protect the baby or child. They risk serious or even fatal injury.

Vehicles with passenger air bag not deactivated

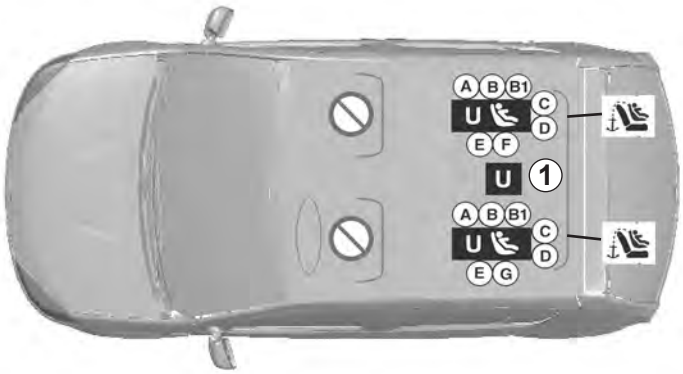

A child seat must not be fitted in this seat

RISK OF DEATH OR SERIOUS INJURY: never fit a child seat to this seat.

Child seat attached using the belt

U Seat which allows a child seat with “Universal” approval to be attached by a seat belt.

1 Only if the seat is equipped with an inertia-reel belt.

Child seat attached using the ISOFIX mounting

Seat which allows an ISOFIX child seat to be fitted.

The rear seats are fitted with an anchorage point which allows a forward-facing ISOFIX child seat with universal approval to be fitted. The anchorage points are located under the luggage compartment carpet and are indicated by a marking.

The size of the ISOFIX child seat is indicated by a letter:
- A, B and B1: for forward-facing seats in group 1 (9 to 18 kg);
- C: rear-facing seats in group 1 (9 to 18 kg);
- D and E: shell seat or rear-facing seats in group 0 or 0+ (less than 13 kg);
- F and G: cots in group 0 (less than 10 kg).

Using a child safety system which is not approved for this vehicle will not correctly protect the baby or child. They risk serious or even fatal injury.

CHILD SAFETY: Fitting a child seat (5/6)

The table below summarises the information already shown on the diagram on the previous pages, to ensure the regulations in force are respected.

Type of child seat	Weight of the child	Seat size	Front passenger seat with airbag		Front passenger seat without airbag (1)	Rear side seats	Rear centre seat (7)
			WITH deactivation (1) (5)	WITHOUT deactivation (1) (6)			
Carrycot fitted across the vehicle Group 0	< 10 kg	F - G	X	X	X	U - IL (2)	U
Shell seat/Rear-facing seat Group 0, 0+ and 1	< 13 kg 9 kg to 18 kg	E, D	U	X	U	U - IL (3)	U
Rear-facing seat Group 0+ and 1	< 13 kg 9 kg to 18 kg	C	U	X	U	U - IL (3)	U
Forward-facing seat Group 1	9 kg to 18 kg	B, B1	X	X	X	U - IUF - IL (4)	U
Forward-facing seat Group 1	9 kg to 18 kg	A	X	X	X	U (4)	U
Booster seat Group 2 and 3	15 to 25 kg and 25 to 36 kg	–	X	X	X	U (4)	U

(5) RISK OF DEATH OR SERIOUS INJURY: before fitting a child seat on the front passenger seat, check that the air bag has been deactivated (refer to the information on “Deactivating the front passenger air bag” in Section 1).

(6) RISK OF DEATH OR SERIOUS INJURY: never fit a child seat to this seat.

CHILD SAFETY: Fitting a child seat (6/6)

X = Seat not suitable for fitting child seats.
U = Seat which allows a child seat with “Universal” approval to be installed using a seat belt; check that it can be fitted.
IUF = Seat which, on equipped vehicles, allows forward-facing child seats with “Universal” approval to be attached by the ISOFIX system; check that it can be fitted.
IL = Seat which, on equipped vehicles, allows child seats with “Semi-Universal” or “Specific to vehicle” approval to be attached by the ISOFIX system; check that it can be fitted.

Refer to the brochure “Child safety equipment” available from the Network to choose the seat suited to your child and recommended for your vehicle.

(1) Only a rear-facing child seat can be fitted in this seat: raise the seat to the maximum and position it as far back as possible, tilting the seatback slightly (approximately 25°).
(2) A carrycot can be installed across the vehicle and will take up two seats. Position the child with his or her feet nearest the door.
(3) Move the front seat as far forward as possible to install a rear-facing child seat, then move back the seat in front as far as it will go, although without allowing it to come into contact with the child seat.
(4) Forward-facing child seat; position the seatback of the child seat in contact with the seatback of the vehicle seat. Adjust the headrest, or remove it if necessary. Do not push the seat in front of the child more than halfway back on its runners and do not recline the seatback more than 25°.
(7) Only if the seat is equipped with an inertia-reel belt.

Deactivating the front passenger air bag
(depending on vehicle)

To fit a rear-facing child seat on the front passenger seat, you **must** deactivate the front passenger air bag if your vehicle is fitted with air bag deactivation.

To deactivate the passenger air bag, with the vehicle stopped and the ignition off, press and turn button ***1*** to the **OFF** position.

When the ignition has been switched back on, it is **essential** to check that the warning light ***2***, , is lit on the instrument panel.

This warning light remains continuously lit to let you know that you can fit a child seat.

The passenger air bag must be activated or deactivated with the **ignition off**.

If handled when the ignition is on, the warning light comes on.

Switch the ignition off then on again to reset the air bag in accordance with the lock.

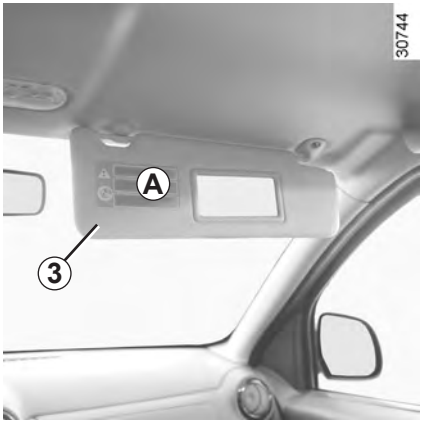

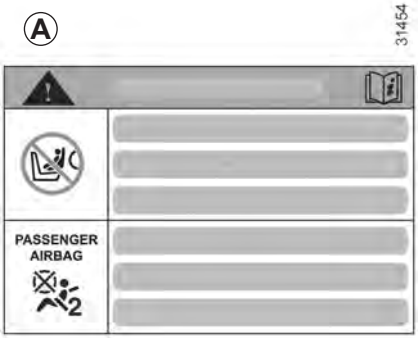

The markings on the dashboard and labels ***A*** on each side of passenger sun blind ***3*** (example: label shown above) remind you of these instructions.

DANGER

Since operation of the front passenger air bag is not compatible with the position of a rear-facing child seat, **NEVER** fit a rear-facing child seat on a front passenger seat with an active front air bag. The child may suffer very serious injuries if the air bag is triggered.

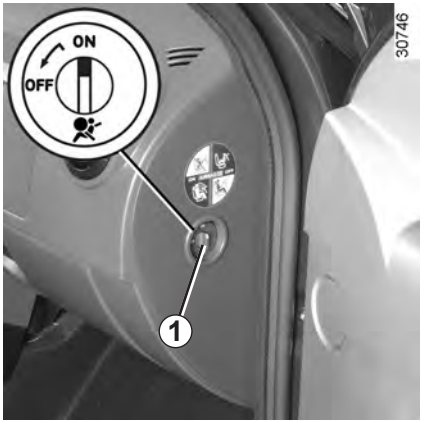

Activation of the front passenger air bag
(depending on vehicle)

You should reactivate the air bag as soon as you remove the child seat from the front passenger seat to ensure the protection of your front passenger in the event of an impact.

To reactivate the air bag: with the vehicle stopped and the ignition off, press and turn button ***1*** to the **ON** position.

With the ignition on, it is **essential** to check that warning light ***2***, , is off.

Operating faults

It is forbidden to fit a rear-facing child seat to the front passenger seat if the air bag activation/deactivation system is faulty.

Allowing any other passenger to sit in that seat is not recommended.

Contact your approved dealer as soon as possible.

Door mirrors with manual adjustment

To adjust the mirror, move lever ***1***.

Foldable door mirrors

Fold the door mirror manually against the door window.

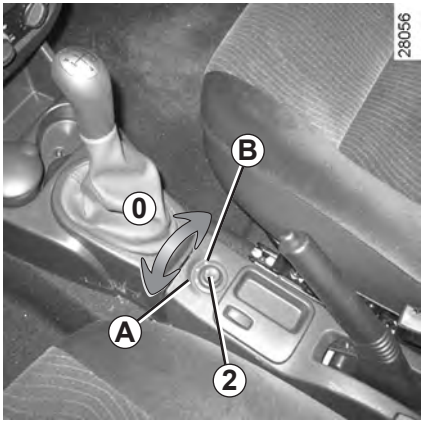

Door mirrors with electrical adjustment:

With the ignition on, move button ***2***:
- position ***A*** to adjust the left-hand door mirror;
- position ***B*** to adjust the right-hand door mirror;

0 is the neutral centre position.

Heated door mirrors

The mirror is de-iced when the rear screen is de-iced/demisted; refer to the information on the “Heated rear screen”.

Interior rear view mirror

Its position can be adjusted. When driving at night, to avoid being dazzled by the headlights of the vehicle behind, depress the little lever located behind the rear view mirror ***3***.

DRIVER'S POSITION, LEFT-HAND DRIVE (1/2)

The presence of the equipment DEPENDS ON THE VEHICLE VERSION AND COUNTRY.

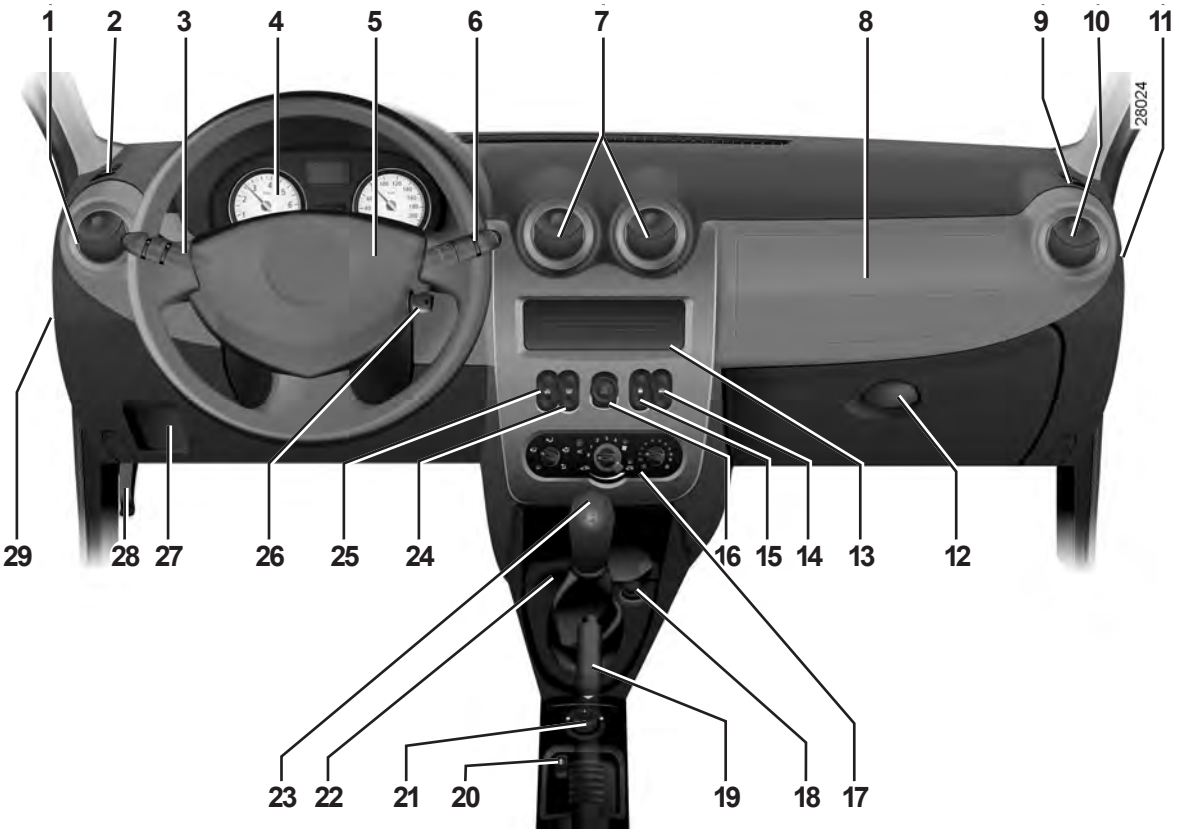

DRIVER'S POSITION, LEFT-HAND DRIVE (2/2)

The presence of the equipment DEPENDS ON THE VEHICLE VERSION AND COUNTRY.

1 Side air vent.

2 Demister outlet.

3 Stalk for:
- direction indicator lights,
- exterior lights,
- front fog lights,
- rear fog lights,
- horn.

4 Instrument panel.

5 Location for driver's air bag.

6 Steering column stalk for windscreen and rear screen wash/wipe. On-board computer information readout control.

7 Centre air vents.

8 Location for passenger air bag or storage compartment.

9 Demister outlet.

10 Side air vent.

11 Passenger air bag activation/deactivation switch.

12 Glove box.

13 Location for radio or storage compartment.

14 Electric window control.

15 Central door locking switch.

16 Hazard warning lights switch.

17 Heating and ventilation controls.

18 Cigar lighter.

19 Handbrake.

20 Rear window electric locking control.

21 Electric door mirror control.

22 Location for ashtray or cup holder.

23 Gear lever.

24 Heated rear screen control.

25 Electric window control.

26 Ignition switch.

27 Headlight beam height adjustment control.

28 Bonnet release.

29 Fuse flap.

DRIVER'S POSITION, RIGHT-HAND DRIVE (1/2)

The presence of the equipment DEPENDS ON THE VEHICLE VERSION AND COUNTRY.

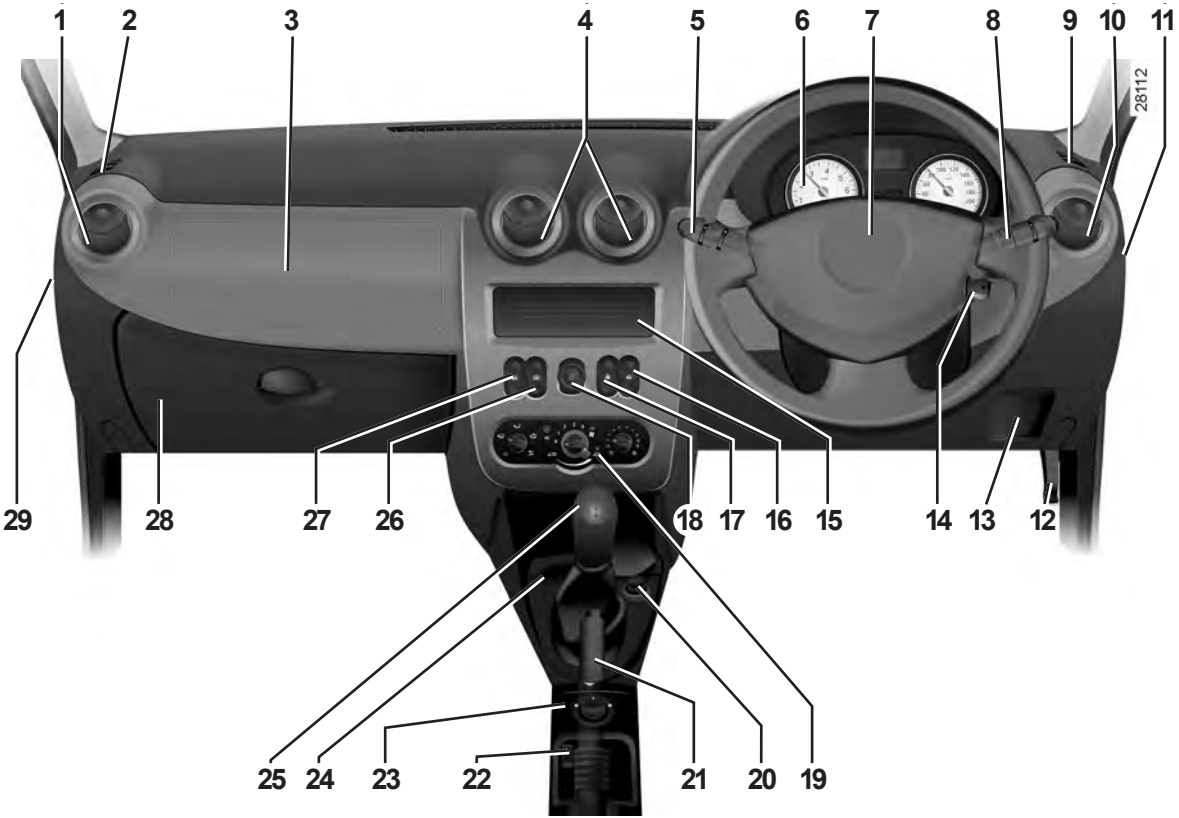

DRIVER'S POSITION, RIGHT-HAND DRIVE (2/2)

The presence of the equipment DEPENDS ON THE VEHICLE VERSION AND COUNTRY.

1 Side air vent.

2 Demister outlet.

3 Storage compartment or location for passenger air bag.

4 Centre air vents.

5 Stalk for:
- direction indicator lights,
- exterior lights,
- front fog lights,
- rear fog lights.

6 Instrument panel.

7 Location for driver's air bag (depending on vehicle).

8 Windscreen wiper/washer stalk. On-board computer information readout control.

9 Demister outlet.

10 Side air vent.

11 Fuse box.

12 Bonnet release.

13 Headlight beam height adjustment control.

14 Ignition switch.

15 Location for radio or storage compartment.

16 Electric window control.

17 Central locking switch.

18 Hazard warning lights switch.

19 Heating and ventilation controls.

20 Cigar lighter.

21 Handbrake.

22 Rear window electric locking control

23 Electric door mirror control.

24 Location for ashtray or cup holder.

25 Gear lever.

26 Heated rear screen control.

27 Electric window control.

28 Glove box.

29 Passenger air bag activation/deactivation switch.

WARNING LIGHTS (1/3)

The presence and operation of the warning lights DEPEND ON THE EQUIPMENT AND COUNTRY.

Instrument panel *A*

The STOP warning light requires you to stop immediately, for your own safety, as soon as traffic conditions allow. Switch off the engine and do not restart it. Contact an approved Dealer.

Dipped beam headlight tell-tale light

Main beam headlight tell-tale light

Engine oil change warning light

This lights up on the instrument panel when an oil change is required.
Change the oil or have it changed as soon as possible.

Only the distance travelled between two oil changes is taken into account; the time interval between two oil changes is not.
The oil should always be changed when the first threshold is reached, i.e. either the distance travelled or the interval specified in your vehicle's maintenance document. This means you may have to change the oil before the warning light comes on.
Refer to the information on the "Oil change" in Section 4.

Anti-lock braking warning light

This light comes on when the ignition is switched on and goes out within three seconds. If it lights up when you are driving, it indicates a fault in the anti-lock braking system. Braking will then be as normal, without the ABS system: contact an approved dealer urgently.

Front passenger air bag deactivation warning light.

Refer to the information on "Child Safety" in Section 1.

Seat belt reminder light

This warning light goes out to let you know that the seat belt has been correctly fastened.

If no lights or sounds are apparent, this indicates a fault in the instrument panel. This indicates that it is essential to stop immediately (as soon as traffic conditions allow). Ensure that the vehicle is correctly immobilised and contact an approved Dealer.

WARNING LIGHTS (2/3)

The presence and operation of the warning lights DEPEND ON THE EQUIPMENT AND COUNTRY.

Coolant temperature warning light

This goes out as soon as the engine starts. If it comes on when driving, it indicates an increase in the coolant temperature. Stop and let the engine idle for a minute or two; the temperature should fall. If it does not fall, stop the engine and allow it to cool before checking the coolant level. If the level is normal, there is another cause. Consult an approved dealer.

Oil pressure warning light

It should go out as soon as the engine starts; if it comes on when you are driving, stop at once and switch off the ignition. Check the oil level.

If the level is normal, the indicator light is being lit by something else. Contact an approved Dealer.

Direction indicator tell-tale light

Engine immobiliser system warning light

This light performs several functions.

Refer to the information on the “Engine immobiliser” in Section 1.

Electronic fault or preheating warning light

Preheating warning light

This light should come on when the ignition key is in position **M**; it indicates that the heater plugs are in operation.

It goes out when preheating is complete and the engine can be started.

Electronic fault warning light

If it remains lit or comes on when you are driving, it indicates an electrical or electronic fault. Contact an approved dealer as soon as possible

Rear screen de-icing/demisting indicator light

Battery charge warning light

It should go out as soon as the engine starts.

If it comes on when you are driving, it indicates that the circuit is overcharging or has discharged. Stop and contact an approved Dealer.

Toxic Fume Filter System Warning Light

On equipped vehicles, the light comes on when the ignition is switched on then goes out.

– If it comes on continuously, consult an approved dealer as soon as possible.

– If it flashes, reduce the engine speed until the light stops flashing. Contact an approved dealer as soon as possible.

Refer to the information on “Antipollution, fuel economy and driving” in Section 2.

WARNING LIGHTS (3/3)

The presence and operation of the warning lights DEPEND ON THE EQUIPMENT AND COUNTRY.

Instrument panel *A*

The STOP warning light requires you to stop immediately, for your own safety, as soon as traffic conditions allow. Switch off the engine and do not restart it. Contact an approved Dealer.

Handbrake on and brake circuit incident warning light

If it lights up, check that the hand brake is fully released. If not, it indicates that the fluid level is low in one of the circuits. It may be dangerous to continue driving, contact an approved dealer.

Rear fog light tell-tale

Front fog light tell-tale

Door status warning light

STOP light

This lights up when the ignition is switched on and goes out as soon as the engine is started.

Low fuel level warning light

It comes on when the engine is started then goes out after three seconds. If it stays on, fill up with fuel as soon as possible.

LPG mode indicator

Refer to the document for the LPG system for vehicles which are equipped with it.

Air bag warning light

This lights up when the ignition is switched on and goes out after a few seconds.

If it does not light up when the ignition is switched on, or lights up when the engine is running, there is a fault in the system.

Refer to the information on “Systems in addition to the front seat belts” in Section 1.

Contact an approved dealer as soon as possible.

Water in the diesel filter warning light

If it remains lit or comes on while driving, it indicates that water is present in the diesel filter. Contact an approved dealer as soon as possible.

Rev counter *1* (rpm × 1 000)

Speedometer *2* (km or miles per hour)

Overspeed buzzer

Depending on the vehicle, a buzzer sounds for approximately 10 seconds every 30 seconds, as long as the vehicle is travelling in excess of 72 mph (120 km/h).

Speedometer *2* Dual speed scale (miles per hour and km per hour)
(depending on vehicle)

Fuel gauge *3*

The number of squares lit shows the fuel level. When it is at minimum, the squares disappear and the low fuel level warning light comes on.

Coolant temperature indicator *4*

The number of squares lit depends on the engine coolant temperature. There is no warning unless the last three squares light up.

Multifunction display *A*

Total mileage recorder, distance travelled trip mileometer, clock.

OR

Trip computer and warning system

Refer to the information on the “Trip computer and warning system” in Section 1.

Multifunction key *5*

– **Display selection**

By pressing the button you can shift from the total mileage recorder, trip mileometer and time or vice-versa.

– **Resetting the trip mileage recorder**

Once the trip mileage display is selected, press and hold the button.

– **Resetting the clock**

Refer to the information on the “Clock” in Section 1.

TRIP COMPUTER AND WARNING SYSTEM (1/4)

The information displayed DEPENDS ON THE VEHICLE EQUIPMENT AND COUNTRY.

Display *1*

General reset and trip mileage recorder reset key *2*

To reset the trip mileage recorder, the display must show the Trip mileometer function.

Press and hold button ***2***.

Display selection key *3*

Keep pressing key ***3*** briefly to scroll through the following information (depending on the vehicle) in sequence:

a) total mileage recorder,
b) trip mileage recorder,
c) fuel used,
d) average consumption,
e) estimated range,
f) distance travelled,
g) average speed.

Refer to the table on the following pages showing display examples.

The information displayed DEPENDS ON THE VEHICLE EQUIPMENT AND COUNTRY.

Interpreting some of the values displayed after resetting

The values showing average fuel consumption, range and average speed will become more stable and reliable the further you travel after pressing the reset button.

For the first few miles after pressing the reset key you will notice that the range increases as you travel. This range takes into account the average fuel consumption since the last time the reset button was pressed. Therefore, the fuel consumption may decrease when:

– the vehicle stops accelerating;

– the engine reaches its operating temperature (if the engine was cold when the reset key was pressed);

– driving from an urban area onto the open road;

  Therefore, if the average fuel consumption decreases, the range will increase.

– You may also notice that the average fuel consumption increases when the vehicle is stationary and the engine idling.

  This is normal, since the computer takes account of fuel used during idling.

Manually resetting the journey parameters: with the display showing one of the journey parameters, press button 2 until the display is reset.

Automatically resetting the journey parameters: the reset is automatic when the capacity of one of the memories is exceeded.

TRIP COMPUTER AND WARNING SYSTEM (3/4)

The information displayed DEPENDS ON THE VEHICLE EQUIPMENT AND COUNTRY.

Examples of display selections by repeatedly pressing *3*		Interpreting the display
24448	→	**a) Total mileage recorder.**
24449	→	**b) Trip mileage recorder.**
24450	→	**c) Fuel used** since the last time the reset button was pressed.
24451	→	**d) Average fuel consumption** since the last time the reset button was pressed. This value is displayed after driving 400 metres and takes into account the distance travelled and the fuel used since the last time the reset button was pressed.

TRIP COMPUTER AND WARNING SYSTEM (4/4)

The information displayed DEPENDS ON THE VEHICLE EQUIPMENT AND COUNTRY.

Examples of display selections by repeatedly pressing *3*	Interpreting the display
24445	**e) Estimated range with remaining fuel** This range takes into account the average fuel consumption since the last time the reset button was pressed. The value is displayed after driving around 400 metres.
24446	**f) Distance travelled** since the last reset.
24447	**g) Average speed** since the last reset. The value is displayed after driving around 400 metres.

Side lights

Turn the end of stalk ***1*** until the symbol is opposite mark ***2***.

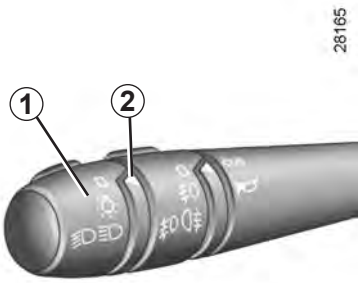

Dipped beam headlights

Turn the end of stalk ***1*** until the symbol is opposite mark ***2***.

An indicator light on the instrument panel will come on.

Main beam headlights

With stalk ***1*** in dipped beam headlights position, move the stalk towards you.

When the main beam headlights are lit, an indicator light lights up on the instrument panel.

To return to the dipped beam headlight position, pull the switch stalk towards you.

Switching off the lights

Return the end of stalk ***1*** to its initial position.

Lights-on reminder buzzer

A warning buzzer will sound when a front door is opened and the lights are left on after the ignition has been switched off (to prevent discharge of the battery).

Before driving at night, check that the electrical equipment is operating correctly and adjust the headlight beams (if your vehicle is not carrying its normal load).

Check that the lights are not obscured (by dirt, mud, snow or objects which could cover them).

Front fog lights

Turn the centre ring of stalk ***3*** until the symbol is opposite mark ***4***.

The fog lights only light up if the exterior lights have been switched on. An indicator light on the instrument panel then lights up.

Do not forget to switch off the fog lights when they are no longer needed, to avoid inconveniencing other road users.

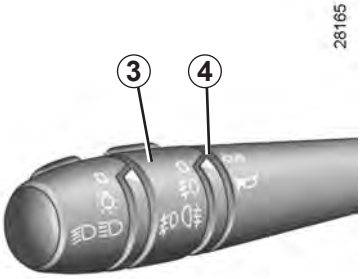

Rear fog lights

Turn the centre ring of stalk ***3*** until the symbol is opposite mark ***4***.

The fog lights only light up if the exterior lights have been switched on. An indicator light on the instrument panel then lights up.

Remember to switch off the these lights when they are no longer required to avoid inconveniencing other road users.

Turning off the fog lights

Turn centre ring ***3*** again to position the symbol corresponding to the fog light or off position opposite mark ***4***. The corresponding indicator light goes out on the instrument panel.

The front and rear fog lights switch off when the exterior lights are switched off.

ADJUSTMENT OF HEADLIGHT BEAM HEIGHT

Control ***A*** is used to adjust the height of the headlight beams according to the load.

Turn control ***A*** anticlockwise to lower the beams and clockwise to raise them.

Vehicle load conditions	Setting position of control *A*
Basic setting: luggage compartment empty and only the driver on board or with one front passenger.	0
Luggage compartment empty, 1, 2, 3 passengers	1
Luggage compartment full, 3 passengers	2
Luggage compartment full, driver only	3

Horn

Press the end of the stalk ***1***.

Depending on the vehicle, press on one of areas ***2***.

Headlight flasher

Pull stalk ***1*** towards you to flash the headlights.

Hazard warning lights

Press switch ***3***.

This switch activates all four direction indicators and the side indicator lights simultaneously.

It must only be used in an emergency to warn drivers of other vehicles that you have had to stop in an area where stopping is prohibited or unexpected, or that you are obliged to drive under special conditions.

Direction indicators

Move stalk ***1*** parallel to the steering wheel and in the direction you are going to turn it.

When driving on the motorway, the steering wheel is not usually turned sufficiently to return the stalk automatically to its starting position. There is an intermediate position in which the stalk may be held when changing lanes.

When the stalk is released, it will automatically return to its starting position.

Windscreen wiper

With the ignition on, move stalk ***1*** around the steering wheel:

A Park.

B Intermittent wiping.
The wipers will pause for several seconds between sweeps.

C Normal wiping speed.

D Fast wiping speed.

Windscreen wiper

With the ignition on, pull stalk ***1*** towards you.

A brief pull will trigger a single sweep of the wipers, in addition to the windscreen washer.

A longer pull will trigger three sweeps of the wipers, in addition to the windscreen washer.

When working in the engine compartment, ensure that the windscreen wiper stalk is in position **A** (park). Risk of injury.

In frosty weather, make sure that the wiper blades are not stuck by ice (risk of motor overheating).

Keep an eye on the condition of the blades. Replace the wiper blades as soon as they begin to lose efficiency (approximately once a year).

Clean your windscreen regularly.

If you switch off the ignition before switching off the windscreen wiper (position ***A***) the blades will stop at random on the windscreen.

After switching the ignition back on, simply move stalk ***1*** to position ***A*** to place them in the park position.

Before any action on the windscreen (washing the vehicle, de-icing, cleaning the windscreen, etc.) return stalk ***1*** to position **A** (park).

Risk of injury and/or damage.

Rear screen wiper
(depending on vehicle)

With the ignition on, turn the end of stalk ***1*** to align the symbol with mark ***2***.

Rear screen washer/ wiper
(depending on vehicle)

With the ignition on, turn the end of stalk ***1*** to align the symbol with mark ***2***.

When the stalk is released, it returns to the rear wipe position.

Before using the rear wiper, check that no object is obstructing the travel of the blade.

In frosty weather, make sure that the wiper blades are not stuck by ice (to avoid the risk of the motor over-heating).

Keep an eye on the condition of the blades. Replace the wiper blades as soon as they begin to lose efficiency (approximately once a year).

Regularly clean your rear screen.

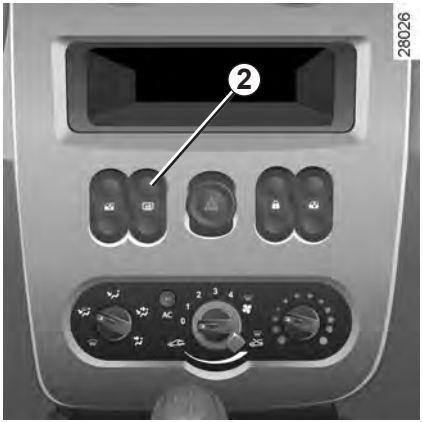

Heated rear screen

With the engine running, press button ***2*** (the indicator light on the instrument panel lights up).
This function de-ices/demists the rear screen and the electric de-icing rear-view mirrors (depending on the vehicle).

The operation is stopped:

– automatically after it has been running for 12 minutes (the indicator light goes out);

– by pressing button ***2*** again (the indicator light goes out).

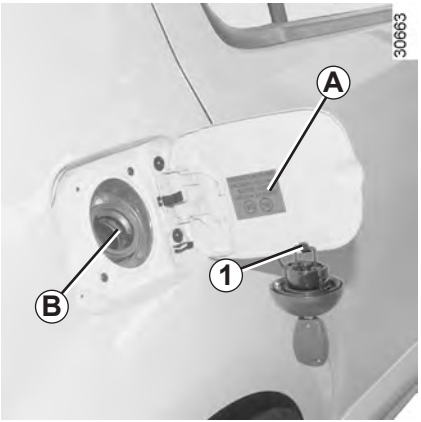

Capacity of the fuel tank: 50 litres approximately.

The cap can be unlocked with the ignition key.

For details on filling the fuel tank, refer to the information on “Filling with fuel”. There is a cap holder ***1*** on the fuel filler flap for holding the cap when the tank is being filled.

Do not mix even small amounts of petrol (unleaded or E85) with diesel.

Do not use ethanol-based fuel if your vehicle is not compatible with this fuel.
Do not add any additives to the fuel, you risk damaging the engine.

Fuel filler cap: this is specific to the vehicle type. If you have to replace it, make sure the new cap is of the same type. Contact an approved dealer.

Never place the cap near a source of heat or flame.

Do not wash the filler area with a high-pressure washer.

Fuel grade

Always use a high-grade fuel that complies with the legislation in force in each country. It must conform to the specifications given on label A inside the fuel filler flap.

Refer to the “Engine specifications” table in Section 6.

Vehicles running on ethanol-based fuel

Always use unleaded petrol or fuel containing a maximum of 85 percent ethanol (E85).

In very cold conditions, it may be very difficult or even impossible to start the engine.

Note: you may notice an increase in fuel consumption with this type of fuel.

When the fuel is changed the engine must adjust, which may cause minor inconveniences for a few minutes (longer starting times, cutting out, etc.).

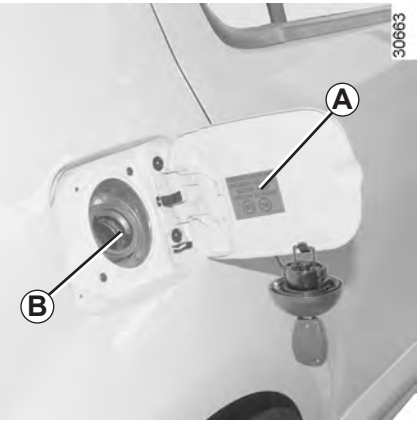

Petrol version

It is **essential** to use unleaded petrol. The octane rating (RON) must conform with the specifications given on the label inside the fuel filler flap ***A***.

Diesel versions

It is **essential** to use diesel fuel that conforms to the specifications given on the label inside fuel filler flap ***A***.

Filling with fuel

Insert the nozzle to open valve ***B*** and insert it **fully** before turning it on to fill the fuel tank (risk of splashing).

Hold it in this position for the whole filling operation. Following the first automatic shut-off at the end of filling, the trigger can be pulled two more times at most, to leave room for expansion.

Make sure that no water enters the fuel tank during filling. Valve ***B*** and its surround must remain clean.

Petrol versions
Using leaded petrol will damage the antipollution system and may lead to a loss of warranty.

To ensure that the fuel tank is not filled with leaded petrol, the fuel tank filler neck contains a restrictor fitted with a foolproof system which **only allows the nozzle for unleaded petrol to be used** (at the pump).

Persistent smell of fuel
If you notice a persistent smell of fuel you should:
– stop the vehicle as soon as traffic conditions allow and switch off the ignition;
– switch on the hazard warning lights and ask your passengers to leave the vehicle and stay clear of the traffic;
– contact an approved Dealer.

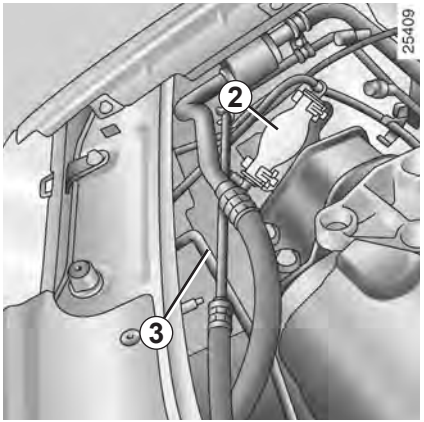

Priming bulb
(diesel version)

After a breakdown caused by completely running out of fuel, the system must be reprimed before the engine is restarted:

Note: the bulb is always located on the right-hand side of the engine compartment.

Work bulb ***2*** until the fuel runs into pipe ***3***.

If the engine does not start after several attempts, contact an approved dealer.

No modifications whatsoever are permitted on any part of the fuel supply system (computers, wiring, fuel circuit, injector, protection covers, etc.) as this may be dangerous (such work must be undertaken by qualified Network personnel).

The engine may be hot when working in close proximity. In addition, the engine cooling fan may come on at any moment.

Risk of injury.

Section 2: Driving

(Advice on use relating to fuel economy and the environment)

Running in, Ignition switch 2.2
Starting, Stopping the engine 2.3
Special features of petrol versions 2.4
Special features of diesel versions 2.5
Recommendations: anti-pollution, fuel economy and driving 2.6
Environment 2.9
Gear lever 2.10
Handbrake, Power-assisted steering. 2.11
Driver correction devices and aids 2.12
Automatic gearbox. 2.14

Petrol version

For the first **600 miles (1,000 km)**, do not exceed 78 mph (130 km/h) in the highest gear, or 3,000 to 3,500 rpm.

You may only expect top performance from your vehicle after approximately **1,800 miles (3,000 km).**

Service intervals: refer to the Maintenance Service Booklet for the vehicle.

Diesel version

For the first **900 miles (1,500 km)**, do not exceed 2,500 rpm. After completing this mileage you may drive faster, although you may only expect top performance after approximately 3,600 miles (6,000 km).

Do not accelerate hard while the engine is still cold and do not let the engine over-rev.

Service intervals: refer to the Maintenance Service Booklet for the vehicle.

Stop and steering lock position St

To lock: remove the key and turn the steering wheel until the steering column locks.

To unlock: turn the key and the steering wheel slightly.

Accessories position A

When the ignition is switched off, any accessories (radio, etc.) will continue to function.

Ignition on position M

The ignition is switched on:

– **petrol version:** the engine may be started.

– **diesel version:** the engine is pre-heating.

Start position D

If the engine fails to start at the first attempt, the key must be turned back before the starter can be activated again.

Release the key as soon as the engine starts.

STARTING/STOPPING THE ENGINE

Starting the engine

In very cold conditions (temperatures below –20°C): so that it is easier to start the engine, switch on the ignition for several seconds **before** starting the engine.

Make sure the engine immobiliser is not activated. Refer to the information on the “Engine immobiliser” in Section 1.

Vehicle equipped with an automatic gearbox

Before starting, move the lever to position N or P.

Refer to the information on the “Automatic gearbox” in Section 2.

Petrol injection

Engine warm or cold

– Activate the starter **without depressing the accelerator**.

– Release the key as soon as the engine starts.

Diesel injection

Turn the ignition key to ignition “On” position **M**, and hold this position until the preheating warning light goes out.

Move the key to “Start” position **D without accelerating.** Release the key as soon as the engine starts.

Stopping the engine

With the engine idling, turn the key back to “Stop” position **St**.

Never leave your vehicle with the key or remote control inside and never leave a child (or a pet) unsupervised, even for a short while.

The reason for this is that the child may endanger himself or others by starting the engine, activating equipment such as the window winders for example, or locking the doors.

Risk of serious injury.

Never switch off the ignition before the vehicle has stopped completely. Once the engine has stopped, the brake servo, power assisted steering and passive safety equipment such as air bags will no longer operate.

The steering is locked when the key is removed.

The following operating conditions:

– driving for long periods when the low fuel level warning light is lit;
– using leaded petrol;
– using oil or fuel additives which are not approved by the manufacturer.

Or operating faults such as:

– faulty ignition system, running out of fuel or disconnected spark plugs resulting in the engine misfiring or cutting out when driving;
– loss of power,

may cause the catalytic converter to overheat, reducing its efficiency **which may irreparably damage it and cause heat damage to the vehicle.**

If you notice any of the above operating faults, have the necessary repairs carried out as soon as possible by an approved Dealer.

These faults may be avoided by regularly taking your vehicle to your approved dealer at the intervals specified in your Maintenance Service Document.

Starting problems

To avoid damaging the catalytic converter, **do not** keep trying to start the engine (using the start button, or by pushing or towing the vehicle) **without having identified and corrected the starting fault.**

If the fault cannot be identified, do not continue to try and start the engine, but contact an approved dealer.

Do not park the vehicle or run the engine in locations where combustible substances or materials such as grass or leaves can come into contact with a hot exhaust system.

SPECIAL FEATURES OF DIESEL VERSIONS

Diesel engine speed

Diesel engines are fitted with an injection pump **which prevents the engine speed being exceeded** irrespective of the gear selected.

When driving, depending on the fuel grade used, it is possible that white smoke may be emitted.

This is due to the exhaust particle filter being cleaned automatically, and does not affect the way the vehicle runs.

Running out of fuel

If the **tank has been completely drained**, the system must be reprimed after the tank is refilled: see information on the “Fuel tank” in Section 1 before restarting the engine.

Precautions to be taken in winter

To avoid any faults in icy weather:

– ensure that the battery is always fully charged,

– always keep the diesel tank relatively full to avoid water vapour condensing in it and accumulating at the bottom of the tank.

Do not park the vehicle or run the engine in locations where combustible substances or materials such as grass or leaves can come into contact with a hot exhaust system.

ADVICE: antipollution, fuel economy and driving (1/3)

By virtue of its design, moderate fuel consumption and initial settings, your vehicle conforms to current antipollution regulations. The manufacturer is actively striving to reduce pollutant exhaust gas emissions and to save energy. But the fuel consumption of your vehicle and the level of pollutant exhaust gas emissions are also your responsibility. Ensure that it is maintained and used correctly.

Maintenance

It should be noted that failure to respect antipollution regulations may lead to legal action being taken against the vehicle owner. In addition, replacing engine, fuel supply system and exhaust components with parts other than those originally recommended by the manufacturer may alter your vehicle so that it no longer complies with antipollution regulations.

Have your vehicle adjusted and checked by an approved Dealer, in accordance with the instructions given in your maintenance schedule: they will have all the equipment necessary for ensuring that your vehicle is maintained to its original standard.

Engine adjustments

– **ignition:** this does not require adjustment.

– **spark plugs:** for optimum fuel economy, efficiency and performance the specifications laid down by our Design Department must be strictly applied.

  If the spark plugs have to be changed, use the make, type and gap specified for your vehicle's engine. Contact an approved dealer for this.

– **idle speed:** this does not require adjustment.

– **air filter, diesel filter:** a choked element hinders performance. It must be replaced.

Exhaust gas monitoring system

The exhaust gas monitoring system detects operating faults in the vehicle's antipollution system. These faults may cause mechanical damage or the release of harmful substances.

This warning light on the instrument panel will indicate if there are any faults in the system:

This comes on when the ignition is switched on and goes out after three seconds.

– If it comes on continuously, consult an approved dealer as soon as possible.
– If it flashes, reduce the engine speed until the light stops flashing. Contact an approved dealer as soon as possible.

Driving

– Drive carefully for the first few miles until the engine reaches its normal operating temperature, rather than let it warm up while the vehicle is stationary.

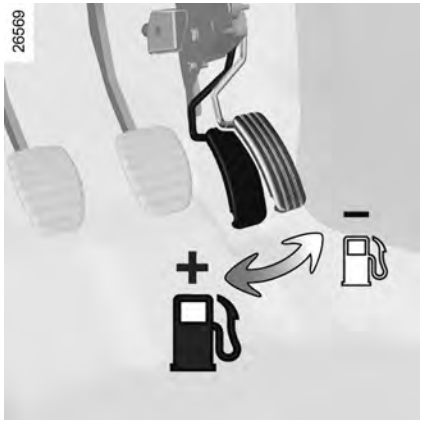

– Speed is expensive.
– Sporty driving uses a lot of fuel: drive with a light right foot.
– Study the road ahead so that you are able to brake as little as possible, it can be sufficient just to lift off the accelerator.
– Avoid sudden acceleration.
– Do not overrev the engine in the intermediate gears. Always use the highest gear possible without labouring the engine.

On versions with an automatic gearbox, it is preferable to keep the gear lever in position **D**.

– Do not try to maintain the same speed up a hill, accelerate no more than you would on the level. Keep your foot in the same position on the accelerator pedal.
– Double declutching and accelerating before switching off are unnecessary in modern vehicles.
– Poor weather conditions, flooded roads. Do not drive through water if it is higher than the lower edge of the wheel rim.

Driving problems

On the driver's side, only use mats specially adapted for the vehicle and attached to prefitted devices. Check regularly to make sure they are secure. Do not overlay several mats.

Risk of pedals jamming.

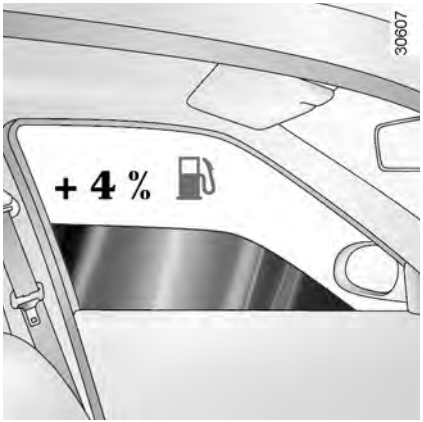

Advice on use

– Electricity is fuel; switch off all the electrical components which are not really needed.

However (safety first), keep your lights on when the visibility is bad ("see and be seen").

– Use the air vents. Driving with the windows open at 60 mph (100 km/h) will increase fuel consumption by 4%.

– **In vehicles fitted with air conditioning,** it is normal to observe an increase in fuel consumption (especially in urban conditions) when it is used. For vehicles fitted with manual air conditioning, switch off the system when it is not required.

Advice for reducing consumption and therefore helping to preserve the environment:

If the vehicle has been parked in the sun, open the doors for a few moments to let the hot air escape before starting the engine.

– Never fill the fuel tank right to the brim to avoid overflow.

– Do not leave an empty roof rack fitted to the vehicle.

– It is better to fit a trailer for bulky objects.

– When towing a caravan, fit a wind deflector and adjust it carefully.

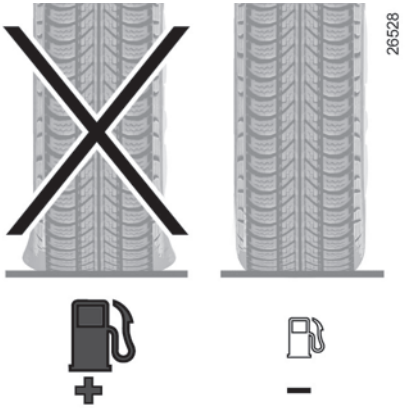

– Avoid using the vehicle for door-to-door journeys (short journeys, with long stops in-between) because in these conditions, the engine never reaches its ideal temperature.

Tyres

Increased fuel consumption could be the result of:

– insufficient pressure,

– using non-recommended tyres.

ENVIRONMENT

Your vehicle has been designed with respect for the **environment** in mind for its entire service life: during production, use and at the end of its life.
This commitment is illustrated by the of the manufacturer eco² signature.

Manufacture

Your vehicle has been manufactured at a factory which complies with a policy to reduce the environmental impact on the surrounding areas (reduction of water and energy consumption, visual and noise pollution, atmospheric emissions and waste water; sorting and re-using waste).

Emissions

Your vehicle has been designed to emit fewer greenhouse gases (CO2) while in use, and therefore to consume less fuel (eg. 140 g/km, equivalent to 5.3 l/100 km for a diesel vehicle).

Our vehicles are also equipped with a particle filter system including a catalytic converter, an oxygen sensor and an active carbon filter (the latter prevents vapour from the fuel tank being released into the open air).

For certain diesel vehicles, this system also has a particle filter to reduce the volume of soot particles emitted.

Please make your own contribution towards protecting the environment too

– Worn parts replaced in the course of routine vehicle maintenance (vehicle battery, oil filter, air filter, batteries, etc.) and oil containers (empty or filled with used oil) must be disposed of through specialist organisations.

– At the end of the vehicle's service life, it should be sent to approved centres to ensure that it is recycled.

– In all cases, comply with local legislation.

Recycling

Your vehicle is 85% recyclable and 95% recoverable.

To achieve these objectives, many of the vehicle components have been designed to enable them to be recycled. The materials and structures have been carefully designed to allow these components to be easily removed and reprocessed by specialist companies.

In order to preserve raw material resources, this vehicle incorporates numerous parts made from recycled plastics or renewable materials (vegetable or animal-derived materials such as cotton or wool).

To select reverse gear
(vehicle stationary)

Vehicle with manual gearbox

Move the lever to neutral, then follow the gate shown on knob ***1***.

Vehicle with automatic gearbox

Refer to the information on the “Automatic gearbox” in Section 2.

The reversing light will come on as soon as reverse gear is selected (ignition on).

An impact to the underside of the vehicle while manoeuvring (e.g.: striking a post, raised kerb or other street furniture) may result in damage to the vehicle (e.g.: deformation of an axle).

To prevent any risk of accident, have your vehicle checked by an approved dealer.

Handbrake

To release

Pull lever ***1*** up slightly, press button ***2*** and then lower the lever to the floor.

Make sure that the handbrake is properly released when driving (red indicator light off), otherwise overheating, or even damage, may occur.

To apply

Pull lever ***1*** upwards and make sure the vehicle is immobilised.

Depending on the gradient and/or vehicle load, it may be necessary when stationary to apply the brake by at least a further two notches and engage a gear (1st or reverse gear).

Power-assisted steering

With the engine running, do not leave the steering wheel at full lock while stationary as this may damage the power-assisted steering pump.

With the engine switched off, or if there is a system fault, it is still possible to turn the steering wheel. The force required will be greater.

Never switch off the ignition when travelling downhill, and avoid doing so in normal driving (assistance is not provided).

Depending on the vehicle, this is composed of:

- **the ABS (anti-lock braking system);**
- **emergency brake assist.**

These functions are an additional aid in the event of critical driving conditions, enabling the vehicle behaviour to be adapted to suit the driving conditions.

However, the functions do not take the place of the driver. **They do not increase the vehicle's limits and should not encourage you to drive more quickly.** Therefore, they can under no circumstances replace the vigilance or responsibility of the driver when manoeuvring the vehicle (the driver must always be ready for sudden incidents which may occur when driving).

ABS (anti-lock braking system)

Under heavy braking, the ABS prevents the wheels from locking, allowing the stopping distance to be managed and keeping control of the vehicle.

Under these circumstances, the vehicle can be steered to avoid an obstacle whilst braking. In addition, this system can increase stopping distances, particularly on roads with low surface grip (wet ground etc.).

You will feel a pulsation through the brake pedal each time the system is activated. The ABS does not in any way improve the vehicle's physical performance relating to the road surface and roadholding. It is still **essential** to follow the rules of good driving practice (such as driving at a safe distance from the vehicle in front etc.).

In an emergency, apply **firm and continuous pressure** to the brake pedal. There is no need to pump it repeatedly. The ABS will modulate the force applied in the braking system.

Operating faults

– Warning light lights up on the instrument panel: the ABS is deactivated.

Braking safety is still guaranteed.

– and are lit on the instrument panel, **this indicates a fault in the braking system.**

In both cases, consult an approved Dealer.

Your braking systems are partially operational. However, it is **dangerous to brake suddenly** and it is essential to stop immediately, as soon as traffic conditions allow. Contact an approved dealer.

Emergency brake assist

This system supplements the ABS and helps reduce vehicle stopping distances.

Operating principle

The system is for detecting an emergency braking situation. In this case, the braking assistance immediately develops maximum power and may trigger ABS regulation.

ABS braking is maintained as long as the brake pedal is applied.

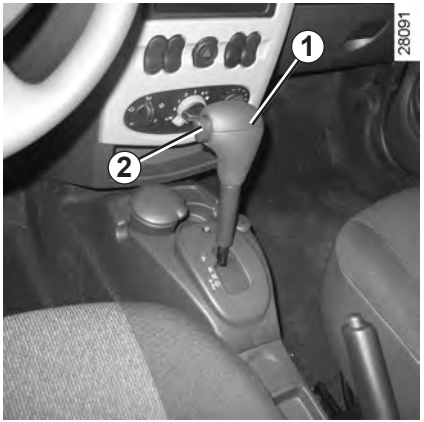

Selector lever *1*

P: park

R: reverse

N: neutral

D: automatic mode

***3*:** displays gear engaged in manual mode.

For safety reasons, do not switch off the ignition before the vehicle has come to a complete standstill.

Operation

With the gear lever in position **P** or **N**, switch on the ignition.

With your foot on the brake pedal, move the lever out of position **P**.

Only engage D or R when the vehicle is stopped, with your foot on the brake and the accelerator pedal released.

You must apply the brake before pressing the unlocking button *2* to move out of position P.

Driving in automatic mode

Move lever ***1*** to position **D**.

In the majority of traffic conditions, you will not have to touch the gear selector lever again: the gear will be changed automatically at the right time and at the most suitable engine speed because the automatic system takes into account the vehicle load and road contour and adjusts itself to the particular driving style you have chosen.

Economical driving

When driving, leave the lever in position **D**, keeping the accelerator pedal lightly depressed to ensure automatic gear changes at comparatively low engine speeds.

Accelerating and overtaking

Depress the accelerator pedal firmly and fully (so that it goes beyond the kickdown point).
This will enable you to change down to the optimum gear within the engine range.

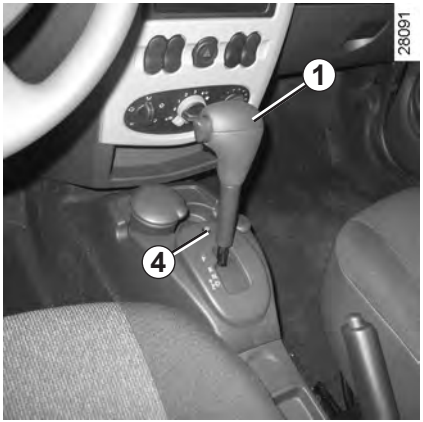

Driving in manual mode

With selector lever ***1*** in position **D**, move the lever to the left.
Shifting the lever repeatedly allows you to change gears manually:

– To move down through the gears, push the lever backwards;

– to move up through the gears, push the lever forwards.

The gear selected is displayed on the instrument panel.

Special cases

In certain driving conditions (e.g.: to protect the engine) the “automated system” may change the gear automatically.

Likewise, to prevent incorrect manoeuvres, a gear change may be refused by the automatic system: in this case the gear display flashes for a few seconds as a warning.

Special circumstances

– **Snow position:** if you are driving on ground where you are likely to skid (snow, mud, etc.), press switch ***4*** and operating tell-tale ***5*** will come on.
Once these special driving conditions no longer apply, exit this function by pressing switch *4* again. Operating tell-tale light *5* goes out.

– **If the road contour and bends in the road** do not allow you to stay in automatic mode (e.g.: in mountainous areas), it is recommended that you switch to manual mode.
This will prevent the automatic gearbox from changing gears repeatedly when climbing, and permit engine braking on long descents.

– **In cold weather**, start the engine and wait a few seconds before moving the selector lever from position **P** or **N** and engaging it in **D** or **R** to prevent the engine stalling.

– **Vehicles not fitted with traction control:** on a slippery surface or surface with a low level of adhesion, change to manual mode and select second gear (or even third) before starting the engine to avoid wheelspin when accelerating.

In very cold weather, the system may prevent the gears from being shifted in manual mode until the gearbox reaches the right temperature.

Parking the vehicle

When the vehicle is stopped, move the lever to position **P** while keeping your foot on the brake pedal: the gearbox is in neutral and the drive wheels are mechanically locked by the driveshaft.
Apply the handbrake.

For safety reasons, do not switch off the ignition before the vehicle has come to a complete standstill.

An impact to the underside of the vehicle while manoeuvring (e.g.: striking a post, raised kerb or other street furniture) may result in damage to the vehicle (e.g.: deformation of an axle).

To avoid any risk of accident, have your vehicle checked by an approved Dealer.

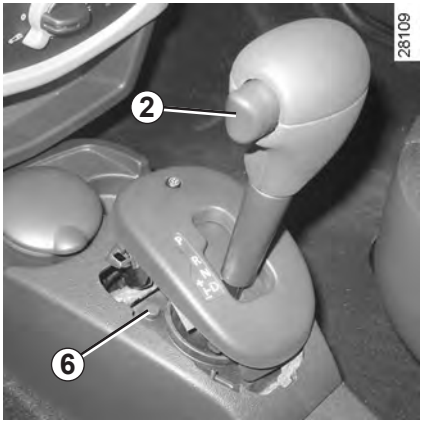

Operating faults

If a vehicle with an automatic gearbox breaks down, please refer to the information on “Towing” in Section 5.
When setting off, if the lever is locked in position **P** even though you are pressing the brake pedal, the lever can be released manually. To do this, unclip the base of the lever, press recess ***6***, visible on the gear lever gaiter, and the unlocking button ***2***.

Section 3: Your comfort

Air vents, air outlets 3.2
Heating, Ventilation, Air conditioning 3.4
Manual air conditioning 3.6
Air conditioning: information and advice on use 3.9
Interior lighting 3.10
Electric windows 3.11
Sun visor, Grab handle 3.13
Ashtrays, Cigarette lighter, Accessories socket 3.14
Passenger compartment storage space and fittings 3.15
Rear headrests 3.17
Rear bench seat: functions 3.18
Luggage compartment, Transporting objects in the boot 3.19
Roof bars 3.20
Rear parcel shelf 3.21
Multimedia equipment 3.22

AIR VENTS, air outlets (1/2)

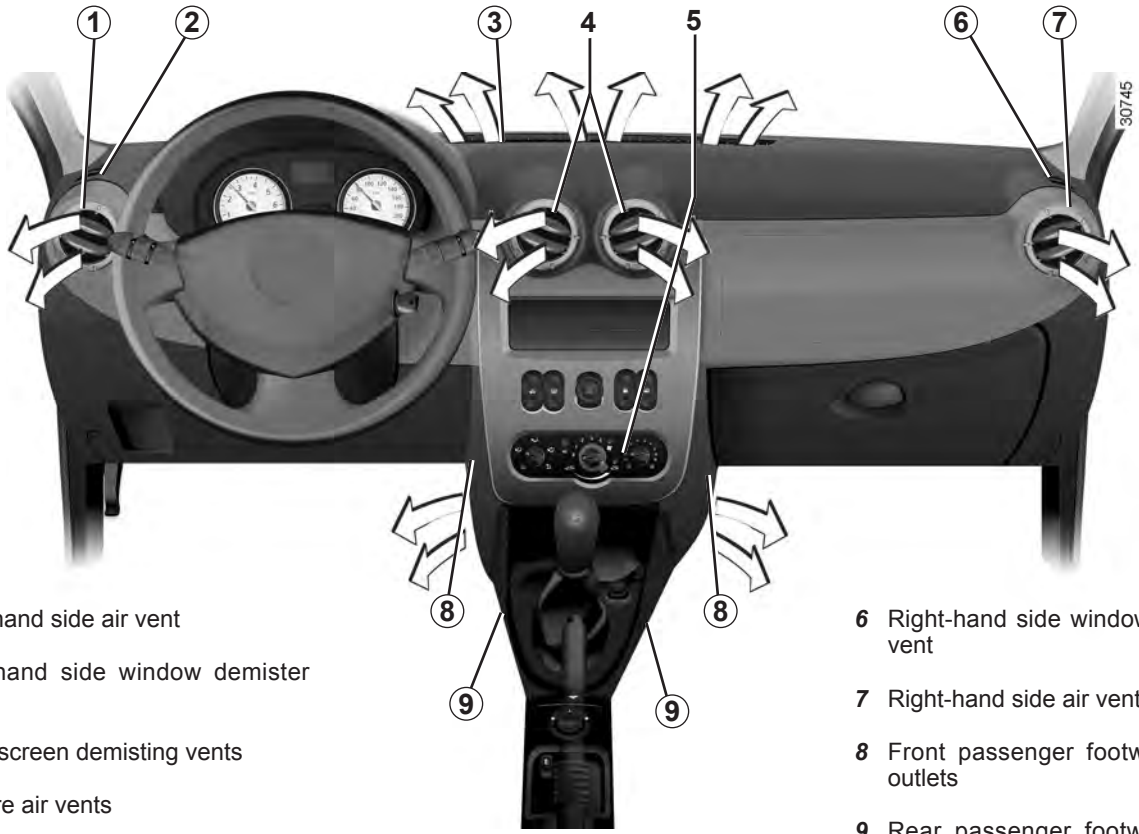

1 Left-hand side air vent

2 Left-hand side window demister vent

3 Windscreen demisting vents

4 Centre air vents

5 Control panel

6 Right-hand side window demister vent

7 Right-hand side air vent

8 Front passenger footwell heater outlets

9 Rear passenger footwell heater outlets (depending on the vehicle)

Centre and side air vents

Air flow

To open air vent ***10*** or ***12***, press on the air vent (point ***11***) until it is open as far as required.

Direction

To direct the air flow, swivel air vent ***10*** or ***12***.

To remove bad odours from your vehicles, only use the systems designed for this purpose. Consult an approved Dealer.

Do not add anything to the vehicle's ventilation circuit (for example, to remove bad odours).

There is a risk of damage or of fire.

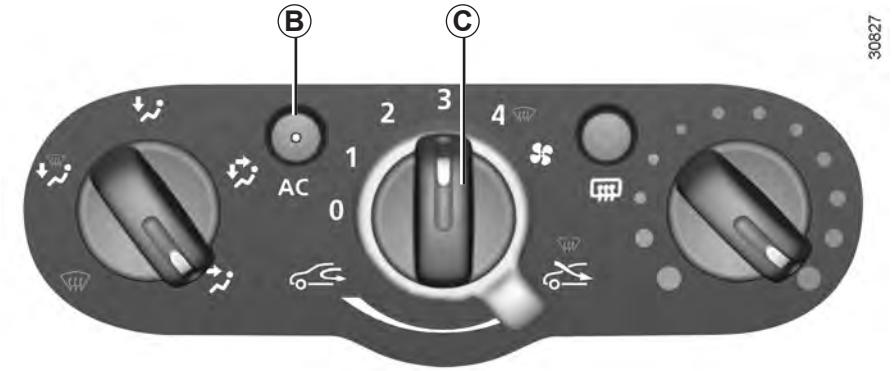

Air conditioning controls
(depending on vehicle)

Button ***B*** switches the air conditioning on or off.

The system **cannot be switched on** if control ***C*** is set to **0**.

Using the air conditioning system enables you to:

– lower the internal passenger compartment temperature, especially in hot weather, when driving in traffic or when the vehicle has been parked in the sun;

– reduce the humidity of the air blown into the passenger compartment (removal of condensation).

Fuel consumption increases when the air conditioning system is being used (switch it off when it is not required).

Note: The air conditioning may be used in all conditions but does not operate when the external temperature is low.

– **Button *B* not activated (warning light off).**

  The air conditioning is not operating. The heating and ventilation controls are the same as a vehicle without air conditioning.

– **Button *B* activated (warning light on).**

  The air conditioning is operating.

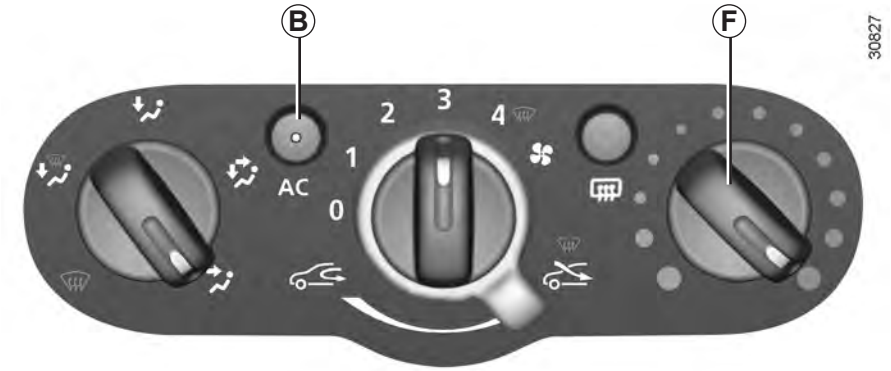

In very hot weather or when the vehicle has been parked in the sun, open the doors for a few moments to let the hot air escape before starting the engine.

Use the passenger compartment isolation function to lower the temperature as quickly as possible to the required comfort level. Switch off the air recirculation function once a comfortable level has been reached.

When the air conditioning system is operating, all windows must be closed for maximum efficiency.

If there is an operating fault, contact an approved dealer.

Do not open the refrigerant fluid circuit. The fluid may damage eyes or skin.

If no cold air is produced

Check that the controls are set correctly and that the fuses are sound. If they are not, switch off the heating and air conditioning system (warning light integrated into button ***B***) and contact an authorised dealer.

Adjusting the air temperature.

Move control ***F*** to obtain the desired temperature. The further the control is in the red, the more the temperature will be increased.

MANUAL AIR CONDITIONING (1/3)

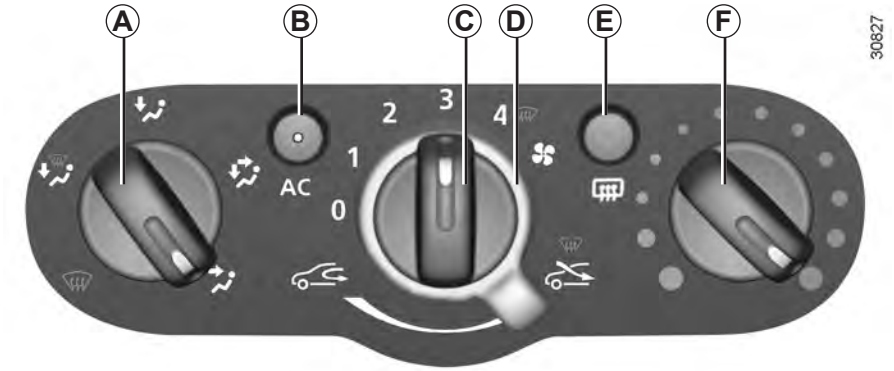

Controls

A Adjusting the distribution of air in the passenger compartment.

B Air conditioning button (depending on vehicle).

C Adjusting the ventilation speed.

D Air recirculation and isolation of the passenger compartment.

E Heated rear screen and demister and heated door mirror button (depending on vehicle).

F Adjusting the air temperature.

Information and advice for use:

Please see the information on “Air conditioning: information and advice on use”.

Distribution of air in the passenger compartment

Turn control ***A***.

Close the dashboard vents for more effective demisting.
All the air is then directed to the windscreen and front side window demister outlets.

The air flow is distributed between all the air vents, the front side window demisting vents, the windscreen demisting vents and the footwells.

The air flow is directed mainly towards the footwells.

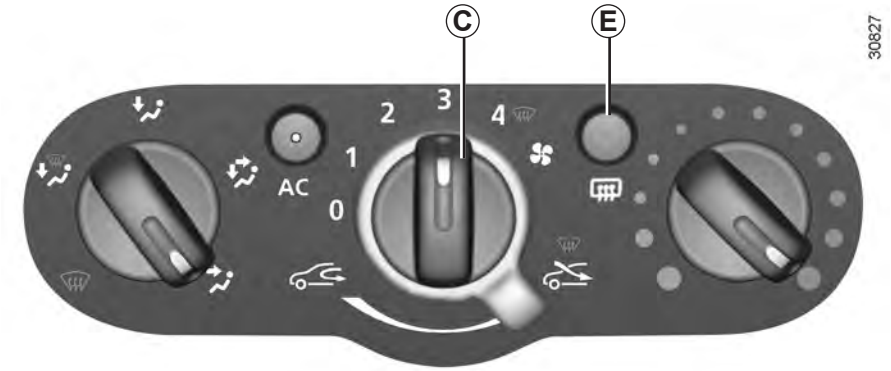

The air flow is directed towards the dashboard vents and the footwells.

All the air flow is directed to the dashboard vents.

This selection is not appropriate if all the air vents are closed.

Rear screen de-icing/ demisting

With the engine running, press button ***E***, the operating warning light for the button will come on.

This function permits rapid demisting/ de-icing of the rear screen and de-icing of the door mirrors (on equipped vehicles).

To exit this function, press button ***E*** again.

Demisting automatically stops by default.

Adjusting the ventilation speed

Turn control ***C*** from **0** to **4**.

The passenger compartment is ventilated by blown air. The blower determines how much air enters but vehicle speed has a slight effect on this.

The further the control is positioned to the right, the greater the amount of air blown into the passenger compartment.

Air recirculation operation (isolation of the passenger compartment)
(depending on vehicle)

Turn control ***D*** towards air recirculation symbol .

In these conditions air is taken from the passenger compartment and is recirculated, with no air being taken from outside the vehicle.

Air recirculation is for:

– isolating the vehicle from the external atmosphere (driving in polluted areas, etc.);

– bringing the passenger compartment to the desired temperature as quickly as possible.

Prolonged use of this position (isolation mode) may mist up the windows slightly or cause odours due to the air not being renewed.
It is therefore advisable to return to normal operation (external air) by pressing control ***D*** when you have passed through the polluted area.

Fuel consumption

You will normally notice an increase in fuel consumption (especially when driving in town) when the air conditioning is operating.

For vehicles fitted with air conditioning with no automatic mode, switch off the system when it is not required.

Advice for reducing consumption and helping to preserve the environment

Drive with the air vents open and the windows closed.

If the vehicle has been parked in the sun, open the doors for a few moments to let the hot air escape before starting the engine.

Maintenance

Refer to the Maintenance Service Booklet for your vehicle for the inspection frequency.

Operating faults

As a general rule, contact your approved dealer in the event of an operating fault.

– **Reduction in de-icing, demisting or air conditioning performance**.
This may be caused by the passenger compartment filter cartridge becoming clogged.

– **No cold air is being produced**.
Check that the controls are set correctly and that the fuses are sound. Otherwise, switch off the system.

Presence of water under the vehicle. After prolonged use of the air conditioning system, it is normal for water to be present under the vehicle. This is caused by condensation.

Do not open the refrigerant fluid circuit. The fluid may damage eyes or skin.

Courtesy light

Pressing switch ***1*** provides:

– continuous lighting;

– or temporary lighting by opening one of the front doors, or by opening one of the four doors, depending on the vehicle. The light only goes out when the doors are correctly closed;

– no lighting.

Automatic operation of interior lighting (depending on the vehicle)

– if the doors are unlocked using the remote control, the lighting is switched on for approximately 30 seconds.

– if a door is open (or not properly closed), the lighting is switched on for approximately 30 minutes.

– if all the doors are closed, the lighting start to dim when the ignition is switched on.

Map reading light
(depending on the vehicle)

Pressing switch ***2*** provides:

– continuous lighting;

– no lighting.

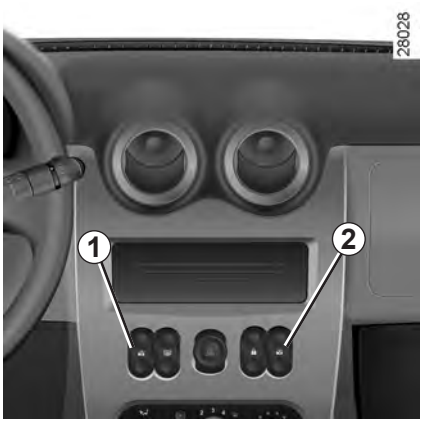

Front electric windows
(depending on vehicle)

With the ignition on, press the bottom of switch ***1*** or ***2*** to open the window or press the top of switch ***1*** or ***2*** to close it.

Avoid resting any objects against a half-open window: there is a risk that the electric window winder could be damaged.

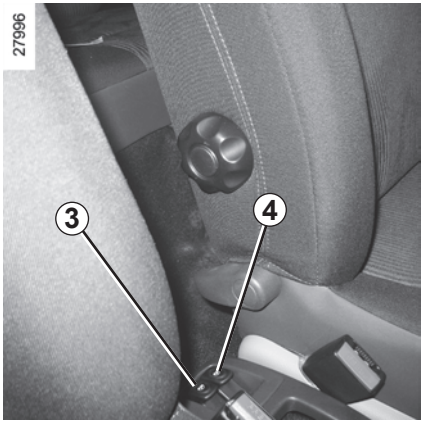

Rear electric windows
(depending on vehicle)

With the ignition on, press switch ***3*** or ***4*** to open the window or raise switch ***3*** or ***4*** to close it.

Locking and unlocking the rear window controls

Press the top of switch ***5*** to lock the operation of the rear electric windows or on the bottom of switch ***5*** to unlock it.

Manual window winder controls

Turn handle ***6*** to lower or raise the window to the desired height.

Safety of rear occupants

The driver can inhibit operation of the rear electric windows by pressing switch ***5***.

Driver's responsibility

Never leave your vehicle with the key or remote control inside and never leave a child (or a pet) unsupervised, even for a short while. They may pose a risk to themselves or to others by starting the engine, activating equipment such as the electric windows or by locking the doors. If any part of the body becomes trapped, reverse the direction of the window immediately by pressing the relevant switch.

Risk of serious injury.

Sun visor

Pivot sun visor ***1*** or ***5*** against the windscreen.

OR

Unclip the sun visor from its mounting ***3*** or ***4*** and pivot it against the door window.

Sun blind storage compartment *2*

This can be used for storing motorway tickets, cards, etc.

Vanity mirror
(depending on the vehicle)

The passenger sun blind is fitted with a courtesy mirror ***6*** on the passenger side.

Grab handle *7*

This offers support and can be held when the vehicle is being driven.

Do not use it for getting into or out of the vehicle.

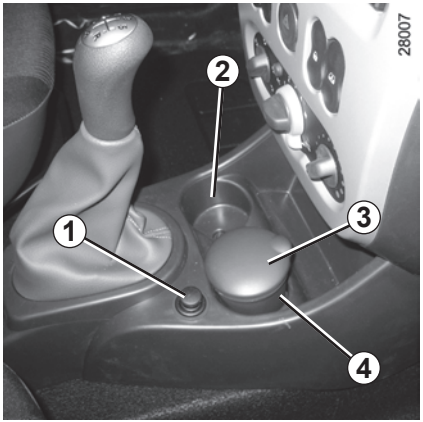

Cigar lighter *1*

With the ignition on, push in the cigar lighter ***1***.

It will spring back with a click when it is ready. Pull it out to use. After use, replace it without pushing it all the way in.

OR

Accessories socket *1*

It is provided for connecting accessories approved by our Technical Department with a maximum power of 120 Watts (12 V).

Ashtray

It can be housed in either position ***2*** or ***4***.

Lift cover ***3*** to open.

Remove the ashtray to empty it.

Connect accessories with a maximum power of 120 Watts only.

Fire hazard.

If your vehicle is not fitted with a cigar lighter and an ashtray, these can be obtained from an approved Dealer.

Passenger side glove box

Pull handle ***1*** to open it.

Nothing should be placed on the floor area in front of the driver as such objects may slide under the pedal during braking manoeuvres, thus obstructing its use.

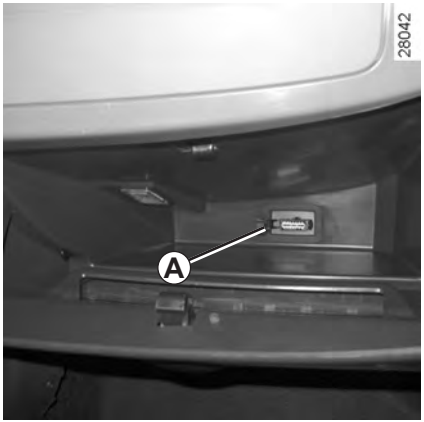

This glove box can be used to store A4 format documents.

Inside the cover, there are two storage spaces for pens and maps.

Precautions during use

Cover ***A*** in the bottom of the glove box protects a socket reserved exclusively for operations by the approved dealer network

You should therefore avoid keeping liquids in this compartment (there is a risk of liquid leaking and getting into this socket).

Storage compartment *2*

(or passenger air bag location)

Ensure that no hard, heavy or pointed objects are placed in the “open” storage compartments in such a way that they may fall onto passengers during sudden turning, braking or in the event of an accident.

Centre console storage compartment *3*
(or radio location)

Front door storage compartments *4*

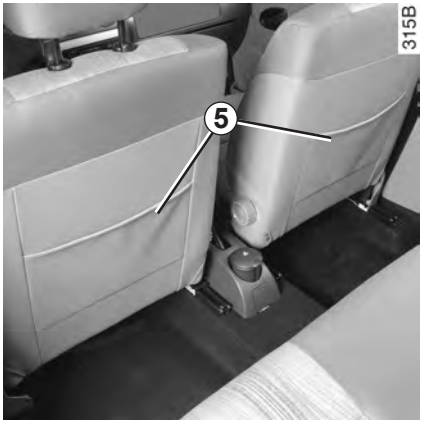

Front seat storage compartments *5*

Nothing should be placed on the floor area in front of the driver as such objects may slide under the pedal during braking manoeuvres, thus obstructing its use.

Ensure that no hard, heavy or pointed objects are placed in the “open” storage compartments in such a way that they may fall onto passengers during sudden turning, braking or in the event of an accident.

REAR HEADRESTS

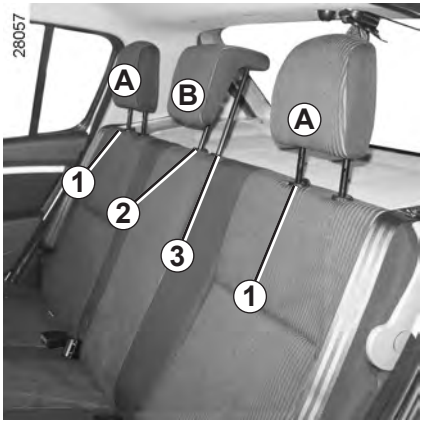

Adjusting the height of the headrests *A*
Press the tab on catch ***1*** on each of the rods on headrest ***A*** and simultaneously slide the headrest.

To remove the headrests *A*
Press the tabs on the catches ***1*** and ***4*** and remove the headrest.

Child headrest storage position *B* (depending on the vehicle)

When the headrest is set at the lowest position, this is for storage only. It should not be in this position when a seat is occupied.

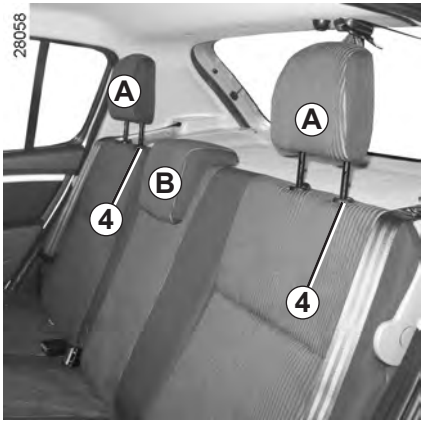

To remove headrest *B*

Simultaneously press the tabs on catches ***2*** and ***3*** on each of the headrest rods, then remove the headrest.

Position for using headrest *B*

Raise the headrest to the upper stop to use it in the high position. Press the tabs on the catches ***2*** and ***3*** and lower the headrest completely.

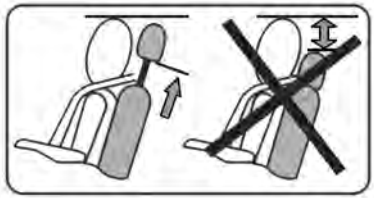

To refit headrests *A* and *B*

Insert the rods into the holes, press the tabs on both rods and lower the headrest.

The headrest is a safety component. Ensure that it is fitted and in the correct position: the top of your head should be in line with the top of the headrest.

To fold down the seatback

Remove the rear headrests (if fitted).

Lower handle ***1***.

Lower seatbacks ***2*** and ***3***.

When moving the rear bench seat, make sure the anchorage points are clean (they should be free from grit, cloths, toys etc.).

To reposition the seatback

Raise the seatbacks.

Check the seatbacks are correctly locked in position.

Check that the rear seat belts are positioned and operating correctly each time the rear bench seat is moved.

For safety reasons, carry out any adjustments when the vehicle is not being driven.

- **When returning the seatback to its normal position,** make sure that it is properly locked at the top.
- **If seat covers are fitted,** make sure these do not prevent the seatback latch from locking in.
- **When moving the bench seat,** ensure the seat belt unit buckles do not cross over and ensure they are correctly repositioned before folding down the seat base.

Once the bench seat has been returned to its normal position, check that the seat belts are correctly positioned. The seat belts must be on the seatback.

Manual control

To open, insert the key in the lock and turn it clockwise.

Remove the key and press button ***1***. Lift the luggage compartment lid.
To close, push the luggage compartment lid downwards. Insert the ignition key in the lock and turn it anticlockwise.

Electric central locking

The tailgate is locked and unlocked at the same time as the doors.

To open, press button ***2*** and lift the tailgate.

To close, push the luggage compartment lid downwards.

Transporting objects in the luggage compartment

Always position the objects transported so that the largest surface is against:

– The back of the rear bench seat, for normal loading.

– The front seats for maximum loads.

Ensure that the load is evenly distributed over the largest possible loading surface to prevent damage to the vehicle.

Always position the heaviest items directly on the floor. Use the lashing points on the luggage compartment floor, if these are fitted to the vehicle. The luggage should be loaded in such a way that no items will be thrown forward and strike the occupants if the driver has to brake suddenly. Fasten the rear seat belts, even if the seats are not occupied.

Access to the mounting points

(depending on the vehicle)

Open the doors. Behind seal ***2*** are blanking bolts ***1*** which protect the mounting bolt locations.

When fitting roof bars, replace the blanking bolts with the mounting bolts supplied with the roof bars.

Never remove blanking bolts ***1*** without plugging the holes afterwards.

Roof bars *3*

(depending on the vehicle)

Luggage can be transported on the roof rack mounted on the roof bars.

Once they are secured on to the vehicle, the mounting bolts should never be removed (risk of damaging the vehicle). Only bolts supplied originally with the roof bars should be used to fit the roof bars onto the vehicle.

For information on the range of equipment adapted to your vehicle, we advise you to consult an approved Dealer. Refer to the manufacturer's instructions for information on how to fit and operate the equipment.

Please keep these instructions with the rest of the vehicle documentation.

Maximum permissible load on roof rack: refer to the information on "Weights" in Section 6.

REAR PARCEL SHELF

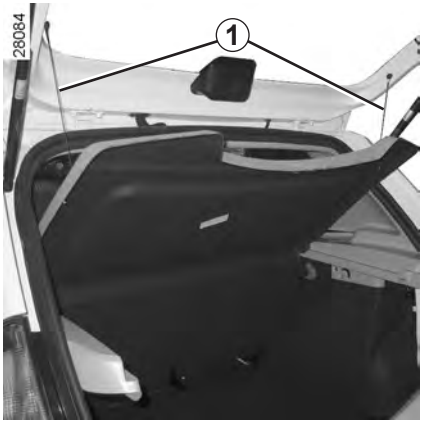

Removal

Unhook the two cords ***1*** (tailgate side).

Lift rear parcel shelf ***2*** slightly and pull it towards you.

To refit it, proceed in reverse order to removal.

Do not place any objects, especially heavy or hard objects, on the parcel shelf. These may pose a risk to the vehicle occupants if the driver has to brake suddenly or if the vehicle is involved in an accident.

The presence and location of this equipment depends on the vehicle's multimedia equipment.

1 Radio;

2 Steering column control;

3 Microphone.

To use this equipment, consult the instructions for the equipment which should be kept with the other vehicle documentation.

Hands-free telephone integrated control

On equipped vehicles, use microphone ***3*** and steering column control ***2***.

Using the telephone

We remind you of the need to conform to the legislation in force concerning the use of such equipment.

Section 4: Maintenance

Bonnet 4.2
Engine oil level: general information 4.4
Engine oil level: topping up, filling 4.5
Engine oil change 4.6
Levels: 4.7
- Brake fluid 4.7
- Engine coolant 4.8
- Windscreen washer reservoir 4.8
- Power-assisted steering fluid reservoir 4.9

Filters 4.10
Tyre pressure 4.11
Battery 4.12
Bodywork maintenance 4.13
Interior trim maintenance 4.15

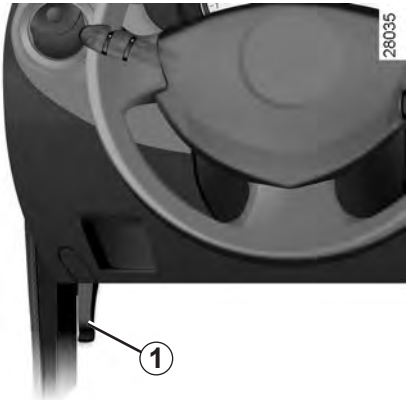

To open the bonnet, pull the handle ***1***.

Unlocking the bonnet catch

To unlock, raise the bonnet slightly and release hook ***2*** by pushing tab ***3*** to the left.

Opening the bonnet

Lift the bonnet, release stay ***4*** from its holder; for your safety, **always** fix it in location ***5***.

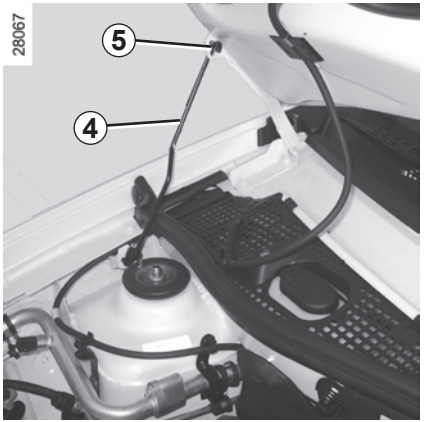

The engine may be hot during operations in close proximity. In addition, the engine cooling fan may come on at any moment.

Risk of injury.

In the event of even a slight impact involving the radiator grille or bonnet, have the bonnet lock checked by an approved Dealer as soon as possible.

Do not press down on the bonnet: there is a risk that the bonnet may accidentally close.

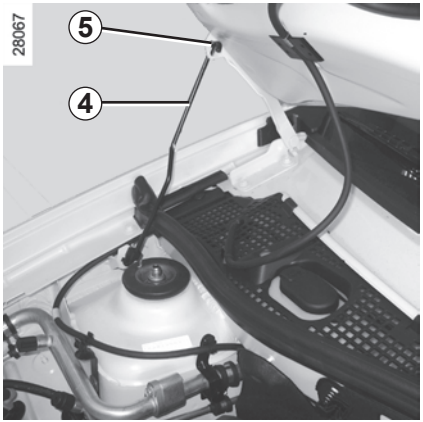

Closing the bonnet

Before closing the bonnet, check to make sure that nothing has been left in the engine compartment.

To close the bonnet, replace stay ***4*** back into its holder ***5***, hold the bonnet in the middle and lower it to 20 cm above the closed position, then release it. It will latch automatically under its own weight.

Check that the bonnet is properly closed and ensure that nothing is obstructing the catch (gravel, cloth, etc.).

Make sure nothing is left in the engine compartment (cloth, tools, etc.).

These may damage the engine or cause a fire.

ENGINE OIL LEVEL: general information

It is normal for an engine to use oil for lubrication and cooling of moving parts and it is sometimes necessary to top up the level between oil changes.

However, contact your approved dealer if more than 0.5 litres is being consumed every 600 miles (1,000 km) after the running in period.

Oil change frequency: check the oil level from time to time and certainly before any long journey to avoid the risk of damaging your engine.

The vehicle must be parked on level ground and the engine should have been switched off for some time beforehand to obtain an accurate reading.

In order to prevent splashback, it is recommended that a funnel be used when topping up/filling with oil.

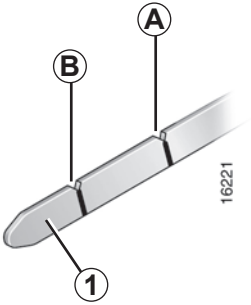

Reading the oil level

– Remove dipstick ***1*** and wipe with a clean, lint-free cloth;

– push in the dipstick as far as it will go;

– take out the dipstick again;

– read the level: it should never fall below minimum mark ***B*** or exceed maximum mark ***A***.

Once the level has been read, push the dipstick in as far as it will go.

Exceeding the maximum engine oil level

The oil level should only be read with the dipstick as explained above.

If the oil level exceeds the maximum level, **do not start your vehicle** and contact an approved dealer.

Consult your approved dealer at once if you notice an abnormal or repeated drop in any of the fluid levels.

Under no circumstances must maximum fill level ***A*** be exceeded: risk of damage to the engine and catalytic converter.

ENGINE OIL LEVEL: topping up/filling (1/2)

Topping up/filling

The vehicle must be parked on level ground and the engine should be cold (for instance, before the engine is started up for the first time in the day).

Engine oil grade

Refer to the Maintenance Service Booklet for your vehicle.

> When working in the engine compartment, ensure that the windscreen wiper stalk is in the park position.
>
> Risk of injury.

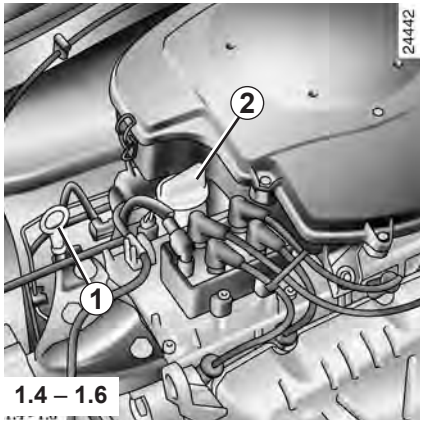

- Unscrew cap ***2***;
- top up the level (as a guide, the capacity between the minimum and maximum reading on dipstick ***1*** is between 1.5 and 2 litres, depending on the engine);
- wait approximately 10 minutes to allow the oil to flow into the engine;
- check the level using dipstick ***1*** (as described above).

Once the level has been read, push the dipstick in as far as it will go.

> Do not exceed the **MAX** level and do not forget to refit dipstick ***1*** and cap ***2***.

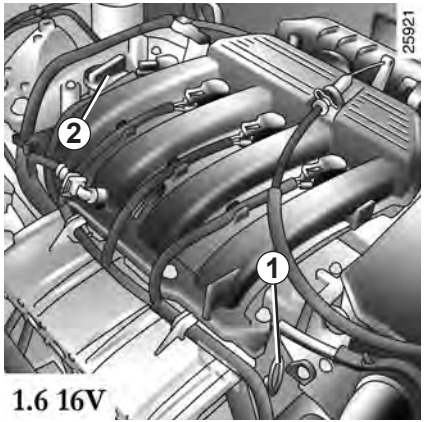

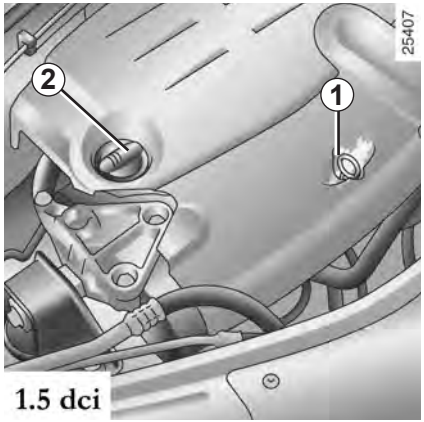

Oil change

Service interval: refer to the Maintenance Service Booklet for your vehicle.

Average capacities for oil change oil filter included.
(for information)
1.2 16V engines: 4.00 litres
1.4 engines : 3.30 litres
1.6 engines : 3.30 litres
1.6 16V engines: 4.80 litres
1.5 dCi engines : 4.10 litres

Engine oil grade

Refer to the Maintenance Service Booklet for your vehicle.

Filling: take care when topping up the oil that no oil drips onto engine components - risk of fire. Remember to refit the cap securely as there is a risk of fire if oil splashes onto hot engine components.

Resetting the alert after an oil change

(depending on the vehicle)

If you change the oil yourself, you will need to reset the oil change warning.
To do this, after switching on the ignition, for ten seconds you must:
– Depress the accelerator pedal fully,
– with your foot on the accelerator, depress the brake pedal three times in succession.

Reinitialisation is complete when the indicator light goes out. If this is not the case, repeat the operation.

Special case: if you change the oil before the oil change interval exceeded warning is displayed, it will also be necessary to reset the display. In this case, the warning light comes on for approximately 5 seconds to confirm the reset.

Never run the engine in an enclosed space as exhaust gases are poisonous.

Engine oil change: if you are changing the oil when the engine is hot, be careful not to scald yourself if the oil overflows.

Consult an approved dealer at once if you notice an abnormal or repeated drop in any of the fluid levels.

The engine may be hot during operations in close proximity. In addition, the engine cooling fan may come on at any moment.

Risk of injury.

Brake fluid level

This should be checked frequently, and immediately if you notice even the slightest loss in braking efficiency.

The level should be read with the engine switched off and on level ground.

The engine may be hot during operations in close proximity. In addition, the engine cooling fan may come on at any moment.

Risk of burns.

Level

It is normal for the level to drop as the brake shoes become worn, but it must never drop lower than the "**MINI**" warning line shown on brake fluid reservoir ***1***.

If you wish to check the disc and drum wear yourself, you should obtain the document explaining the checking procedure from the manufacturer's network or web site.

Consult your approved dealer at once if you notice an abnormal or repeated drop in any of the fluid levels.

Topping up

After any operation on the hydraulic circuit, a specialist must replace the fluid.

Only use fluids approved by the Technical Department and which have been taken from a sealed container.

Replacement intervals

Refer to the Maintenance Service Booklet for your vehicle.

Coolant

With the engine switched off and on level ground, the level **when cold** must be between the "**MINI**" and "**MAXI**" marks on reservoir ***2***.

Top this level up **when cold** before it reaches the "**MINI**" mark.

No operations should be carried out on the cooling circuit when the engine is hot.

Risk of burns.

Checking intervals

Check the coolant level regularly (very severe damage is likely to be caused to the engine if it runs out of coolant).

If the level needs to be topped up, only use products approved by our Technical Department which ensure:

– protection against freezing;

– anti-corrosion protection of the cooling system.

Replacement intervals

Refer to the Maintenance Service Booklet for your vehicle.

Consult an approved dealer at once if you notice an abnormal or repeated drop in any of the fluid levels.

The engine may be hot during operations in close proximity. In addition, the engine cooling fan may come on at any moment.

Risk of burns.

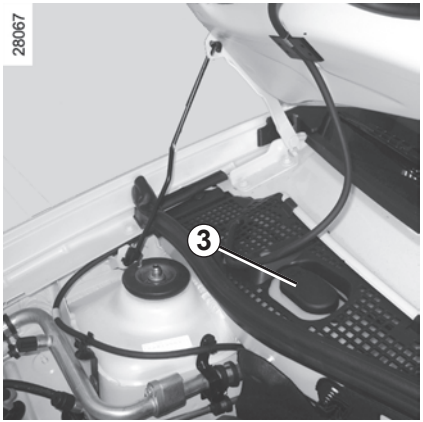

Windscreen washer reservoir

Filling: Remove cap ***3***, fill until you can see the fluid, then refit the cap.

This reservoir supplies the front and rear screen washers.

Liquid: Special windscreen washer fluid (anti-freeze product in winter).

Jets: to adjust the angle of the jets pivot the little ball using a pin.

Use products approved by the Technical Department.

Power-assisted steering fluid reservoir *4* or *5*

Level: for a correct level **when cold**, with the engine switched off and on level ground, it must be visible between the “MINI" and “MAXI" marks on reservoir ***4*** or ***5***.

For maintenance operations on the power-assisted steering, contact an approved dealer.

If you feel any variation in the effectiveness of the power-assisted steering, consult an approved dealer.

Consult an approved dealer at once if you notice an abnormal or repeated drop in any of the fluid levels.

The engine may be hot when carrying out operations in close proximity. In addition, the engine cooling fan can come on at any moment.

Risk of injury.

FILTERS

The replacement of filter elements (air filter, passenger compartment filter, diesel filter, etc.) is scheduled in the maintenance operations for your vehicle.

Replacement intervals for filter elements: refer to the Maintenance Service Booklet for your vehicle.

Passenger compartment filter

If your vehicle is not originally fitted with a passenger compartment filter, it is possible to have one retrofitted.

Contact an approved dealer.

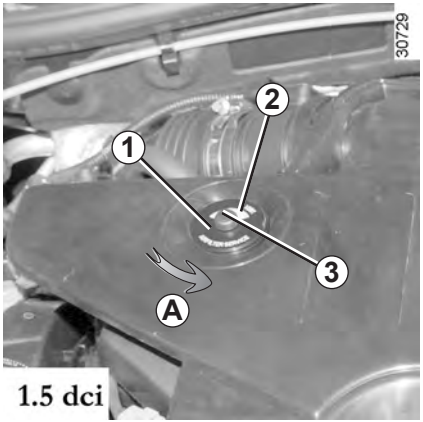

Air filter

If fitted to the vehicle, clogging sensor ***1*** allows you to see the condition of the air filter.

Replacement of the filter is scheduled in the maintenance operations: refer to your vehicle's Maintenance Service Booklet for your vehicle.

However, it must be checked regularly, especially if you drive in dusty environments.

If clogging level indicator ***2*** reaches 100%, consult an approved dealer as soon as possible to have the filter replaced.

Resetting the air filter clogging sensor

Once the air filter has been replaced, turn button ***3*** on the clogging sensor fully (movement ***A***).

The engine may be hot when carrying out operations in close proximity. In addition, the engine cooling fan can come on at any moment.

Risk of injury.

TYRE PRESSURE

The tyre pressure is indicated on label ***A*** affixed to the edge of the driver's door. Open the door to read it.

B: dimension of the tyres fitted to the vehicle.
C: tyre pressures for the front wheels (non-motorway).
D: tyre pressures for the rear wheels (non-motorway).
E: tyre pressures for the front wheels (motorway).
F: tyre pressures for the rear wheels (motorway).

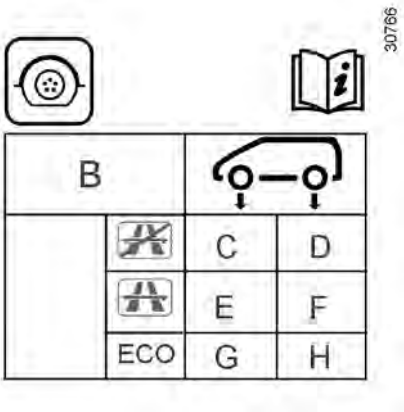

G: tyre pressure for front wheels, recommended for optimising fuel consumption.

H: tyre pressure for rear wheels, recommended for optimising fuel consumption.

Tyre safety and use of snow chains

Refer to the information on "Tyres" in Section 5 for details of the maintenance conditions and, depending on the vehicle version, the use of chains.

Special note

For vehicles used fully laden (maximum permissible all-up weight) **and towing a trailer.** The maximum speed must be limited to **60 mph (100 km/h)** and the tyre pressure increased by **0.2 bar.**

Refer to the information on "Weights" in Section 6.

When they need to be replaced, only tyres of the same make, size, type and profile should be used.

Tyres fitted to the vehicle should either be identical to those fitted originally or conform to those recommended by your approved dealer.

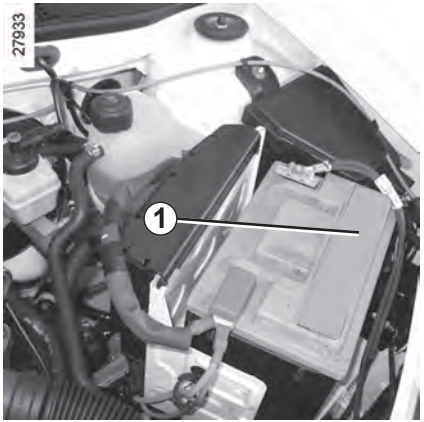

Depending on the vehicle, the battery may be a low maintenance version.

Low maintenance battery

A label on the battery will indicate if the battery is the low maintenance type.

As the battery is **specific to the vehicle** (presence of a ventilation pipe to expel corrosive and explosive gases), make sure that it is replaced with a battery that enables this pipe to be connected. Consult an approved Dealer.

Battery requiring maintenance

Checking intervals:
Every six months, open cover ***1***. Remove the caps and check the level.

Liquid
Distilled or demineralised water to 1.5 cm above the plates. Never add electrolyte or other products.

Replacing the battery

As this operation is complex, we advise you to contact an approved dealer.

Handle the battery with care as it contains sulphuric acid, which must not come into contact with eyes or skin. If it does, wash the affected area with plenty of water and see a doctor if necessary.

Ensure that naked flames, red hot objects and sparks do not come into contact with the battery as there is a risk of explosion.

Label *A*
Observe the indications on the battery:
– ***2*** Naked flames and smoking forbidden;
– ***3*** Eye protection required;
– ***4*** Keep away from children;
– ***5*** Explosive materials;
– ***6*** Refer to the handbook;
– ***7*** Corrosive materials.

The engine may be hot during operations in close proximity. In addition, the engine cooling fan may start at any moment.

Risk of injury.

BODYWORK MAINTENANCE (1/2)

A well-maintained vehicle will last longer. It is therefore recommended to maintain the exterior of the vehicle regularly.

Your vehicle has been treated with very effective anti-corrosion products. It is nevertheless subject to various outside influences.

Corrosive agents in the atmosphere
- atmospheric pollution (built-up and industrial areas),
- saline atmospheres (near the sea, particularly in hot weather),
- seasonal and damp weather conditions (e.g. road salt in winter, water from road cleaners, etc.).

Minor impacts

Abrasive action
Dust and sand in the air, mud, road grit thrown up by other vehicles, etc.

You should take a number of minor precautions in order to safeguard your vehicle against such risks.

What you should not do

Do not degrease or clean mechanical components (e.g. the engine compartment), underneath the body, parts with hinges (e.g. inside the doors) and painted plastic external fittings (e.g. bumpers) using high-pressure cleaning equipment or by spraying on products not approved by our Technical Department. Doing this could give rise to corrosion or operational faults.

Wash the vehicle in bright sunlight or freezing temperatures.

Do not scrape off mud or dirt without pre-wetting.

Allow dirt to accumulate on the exterior.

Allow rust to form following minor impacts.

Do not use solvents not approved by our Technical Department to remove stains as this could damage the paintwork.

Do not drive in snow or muddy conditions without washing the vehicle, particularly under the wheel arches and body.

You should

Wash your car frequently, **with the engine off**, with cleaning products recommended by the manufacturer (never use abrasive products). Rinse thoroughly beforehand with a jet:
- spots of tree resin and industrial grime;
- mud in the wheel arches and underneath the body which forms damp patches;
- **bird droppings**, which cause a chemical reaction with the paint that **rapidly discolours paintwork and may even cause the paint to peel off;**
  wash the vehicle **immediately** to remove these marks since it is impossible to remove them by polishing;
- salt, particularly in the wheel arches and underneath the body after driving in areas where the roads have been gritted.

Remove any plant matter (resin, leaves, etc.) from the vehicle regularly.

Respect local regulations about washing vehicles (e.g. do not wash your vehicle on a public highway).

Observe the vehicle stopping distances when driving on gravelled surfaces to prevent paint damage.

Repair, or have repaired quickly, areas where the paint has been damaged, to prevent corrosion spreading.

Remember to visit the body shop periodically in order to maintain your anti-corrosion warranty. Refer to the Maintenance Document.

If it is necessary to clean mechanical components, hinges, etc., spray them with products approved by our Technical Department to protect them after they have been cleaned.

We have selected special products to care for your vehicle and you can obtain these from the manufacturer's accessory outlets.

Vehicles with a matte paint finish

This type of paint requires certain precautions.

Do not do the following

– use wax-based products (polishing);
– rub hard;
– wash the vehicle in a roller-type car wash;
– wash the vehicle using a high-pressure device;
– attach stickers to the paintwork (risk of leaving marks).

You should do the following

Wash the vehicle by hand using plenty of water, using a soft cloth or a gentle sponge.

Using a roller type car wash

Return the windscreen wiper stalk to the Park position (refer to the information on the "Windscreen washer, wiper" in Section 1). Check the mounting of external accessories, additional lights and mirrors, and ensure that the wiper blades are secured with adhesive tape. Remove the radio aerial mast if your vehicle is fitted with this equipment.
Remember to remove the tape and refit the antenna after washing.

Cleaning the headlights

As the headlights are made of plastic "glass", use a soft cloth or cotton wool to clean them. If this does not clean them properly, moisten the cloth with soapy water, then wipe clean with a soft damp cloth or cotton wool.
Finally, carefully dry off with a soft dry cloth.

Cleaning products containing alcohol must not be used.

A well-maintained vehicle will have a longer service life. It is therefore advisable to maintain the vehicle interior regularly.

Stains should always be dealt with quickly. Whatever type of stain is on the trim, use **soapy water** (if possible, warm water) containing:

Do not use detergents (washing up liquid, powdered products, alcohol-based products, etc.).

Use a soft cloth.

Rinse and soak up the excess.

Glass instrument panel

(e.g.: instrument panel, clock, exterior temperature display, radio display).

Use a soft or cotton cloth. If this does not clean them properly, use a soft cloth (or cotton wool) slightly moistened with soapy water and then wipe clean with another damp soft or cotton cloth.

Finally, dry off **carefully** with a soft dry cloth.

Cleaning products containing alcohol must not be used under any circumstances.

Seat belts

These must be kept clean. Use products selected by our Technical Department or warm, soapy water and a sponge and wipe with a dry cloth.

Detergents or dyes must not be used under any circumstances.

Fabrics (seats, door trim, etc.)

Dust fabrics **regularly**.

Liquid stains

Use soapy water.

Dab lightly (never rub) with a soft cloth, rinse and remove the excess.

Solid or thick stains

Remove any excess solid or thick material **immediately** and carefully using a spatula (from the edge inwards to avoid spreading the stain).
Clean using the procedure for a liquid stain.

Special instructions for sweets or chewing gum

Put an ice cube on the stain to solidify it, then proceed as for a solid stain.

For advice on interior maintenance and/or on unsatisfactory results, contact an approved dealer.

Removing/refitting factory fitted removable equipment in the vehicle

If you need to remove equipment to clean the passenger compartment (e.g. mats), always make you refit it properly and on the correct side (driver's side mats must be fitted on the driver's side, etc.), using retaining components supplied with the equipment (e.g. the driver's side mat must always be secured using prefitted retaining devices).

In all cases, with the vehicle stationary, ensure that nothing can hinder driving (obstacle underneath the pedals, heel trapped by the mat, etc.).

What you should not do

You are strongly advised not to place items such as air fresheners, perfume etc. near the air vents as these could damage the dashboard fittings.

You are strongly recommended not to use high-pressure or spray cleaning equipment inside the passenger compartment: this equipment could impair the correct functioning of the electrical or electronic components in the vehicle, or have other detrimental effects.

Section 5: Practical advice

Tools 5.2
Puncture 5.3
Tyre inflation kit 5.4
Wheel trims, Wheels 5.7
Changing a wheel 5.9
Tyres (tyre and wheel safety, use in winter) 5.11
Changing bulbs 5.14
    Front lights 5.14
    Fog lights 5.15
    Rear lights 5.16
    Side indicator lights 5.18
    Interior lights. 5.19
Fuses. 5.22
Battery 5.25
Radio frequency remote control unit: battery. 5.27
Wiper blades 5.28
Towing: breakdown 5.29
Towing: towbar. 5.31
Fitted audio equipment 5.32
Accessories 5.33
Operating faults 5.34

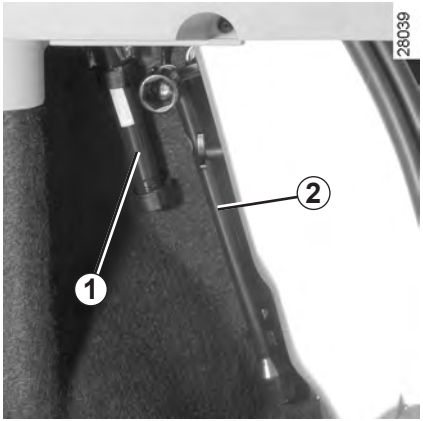

Accessing the tools

The tools are stored in the luggage compartment.

The presence of the tools depends on the vehicle.

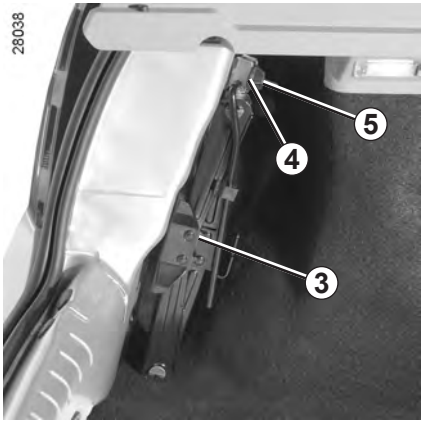

Towing hitch *1*

Refer to the information on “Towing: breakdown” in Section 5.

Wheelbrace *2*

(depending on the vehicle)

This is used to tighten/loosen the wheel bolts and, depending on the vehicle, to access the emergency spare wheel.

Jack *3*

To use the jack, undo bolt ***5***.
When refitting, fold the jack before placing it in its housing. Tighten the nut to secure the jack.

Hubcap tool *4*

This tool is used to remove the wheel trims.

Do not leave the tools unsecured inside the vehicle as they may come loose under braking. After use, make sure the tools are correctly positioned in their housings: risk of injury.

If wheel bolts are supplied in the tool kit, only use these bolts for the emergency spare wheel: refer to the label affixed to the emergency spare wheel.

The jack is designed for wheel changing purposes only. Under no circumstances should it be used for carrying out repairs underneath the vehicle or to gain access to the underside of the vehicle.

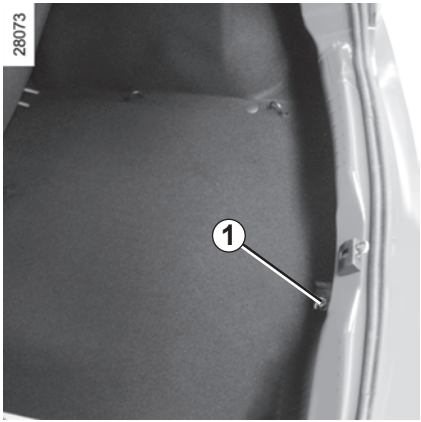

In the event of a puncture, depending on the vehicle, you will have:

An emergency spare wheel or tyre inflation kit (refer to the information on the following pages).

Emergency spare wheel

This is stored in cage ***3*** under the floor at the rear of the vehicle.

To access it:

– Open the tailgate.

– Undo nut ***1*** with the wheelbrace found in the luggage compartment; refer to the information on “Tools” in this section;

– Detach the cage using handle ***2***.

– Remove the emergency spare wheel ***4***.

If the emergency spare wheel has been stored for several years, have it checked by your Dealer to ensure that it is safe to use.

Vehicles fitted with an emergency spare wheel which is different to the four other wheels:

– Never fit more than one emergency spare wheel to the same vehicle.

– Replace the emergency spare wheel as soon as possible with a wheel identical to the original one.

– When this is fitted to the vehicle, which must only be a temporary measure, the driving speed must not exceed the speed indicated on the label on the wheel.

– Fitting an emergency spare wheel may alter the way the vehicle usually runs. Avoid sudden acceleration or deceleration and reduce your speed when cornering.

– If you need to use snow chains, fit the emergency spare wheel to the rear axle and check the tyre pressure.

TYRE INFLATION KIT (1/3)

The kit repairs tyres with tread ***A*** damaged by objects smaller than **4** mm. It cannot repair all types of puncture, such as cuts of more than **4** mm, or cuts in tyre sidewall ***B*** etc.

Ensure also that the wheel rim is in good condition.

Do not pull out the foreign body causing the puncture if it is still in the tyre.

Do not attempt to use the inflation kit if the tyre has been damaged as a result of driving with a puncture.

You should therefore carefully check the condition of the tyre sidewalls before any operation.

Driving with underinflated, flat or punctured tyres can be dangerous and may make the tyre impossible to repair.

This repair is temporary

A tyre which has been punctured should always be inspected (and repaired, where possible) as soon as possible by a specialist.

When replacing a tyre repaired with this kit, you must consult a specialist. When driving, vibration may be felt due to the presence of the repair product injected into the tyre.

The kit is only approved for inflating the tyres of the vehicle originally equipped with the kit.

It must never be used to inflate the tyres of another vehicle, or any other inflatable object (rubber ring, rubber boat, etc.).

Avoid spillage on skin when handling the repair liquid bottle. If droplets do leak out, rinse them off with plenty of water.

Keep the repair kit away from children.

Do not dispose of the empty bottle in the countryside. Return it to your approved dealer or to a recycling organisation.

The bottle has a limited service life which is indicated on its label. Check the expiry date.

Contact an approved dealer to replace the inflation tube and repair product bottle.

TYRE INFLATION KIT (2/3)

Depending on the vehicle, in the event of a puncture, use the kit located in the boot.

Before using this kit, park the vehicle at a sufficient distance from traffic, switch on the hazard warning lights, apply the handbrake, ask all passengers to leave the vehicle and keep them away from traffic.

Open the kit, remove caps ***1*** and ***3*** (it is **essential** not to remove the cap from the bottle) then screw bottle ***2*** to its support **3**.

With the engine running and the handbrake applied,

– unscrew the valve cap on the wheel concerned and screw the inflation adapter ***6*** onto valve;

– connect adapter ***8*** to accessories socket ***9*** on the dashboard of the vehicle;

– press switch ***5*** to inflate the tyre to the recommended pressure (check the label affixed to the edge of the driver's door);

– after a maximum of **5** minutes, stop inflating and read the pressure (on the pressure gauge ***4***);

  Note: while the bottle is emptying (approximately 30 seconds), pressure gauge ***4*** will briefly indicate a pressure of 6 bar, then the pressure will drop.

– adjust the pressure: to increase it, continue inflating with the kit, to reduce it, turn button ***7*** located on the inflation adapter.

If a minimum pressure of 1.8 bar is not reached after 15 minutes, repair is not possible; do not drive the vehicle but contact an approved dealer.

Once the tyre is inflated correctly:

– stop using the kit;
– close the integrated cap on the bottle again;
– disconnect adapter ***8***;

Nothing should be placed around the driver's feet as such objects may slide under the pedals during sudden braking manoeuvres and obstruct their use.

– affix driving recommendation label ***10*** to the dashboard where it can easily be seen by the driver;
– store the kit;
– after the first inflation procedure the tyre will still be leaking; it is vital to drive in order to plug the hole;
– start immediately and drive at between 12 and 36 mph (20 and 60 km/h) to distribute the product evenly throughout the tyre, stopping after a distance of 2 miles (3 kilometres) to check the pressure;

Following repair with the kit, do not travel further than 120 miles (200 km). In addition, reduce your speed and under no circumstances exceed 48 mph (80 km/h). The sticker, which you must affix in a prominent position on the dashboard, reminds you of this.
Depending on the country or local legislation, a tyre repaired with the tyre pressure kit will need to be replaced.

– if the pressure is above 1.3 bar but lower than the recommended pressure, readjust it (refer to the label affixed to the edge of the driver's door), otherwise contact an approved dealer: repair is not possible.

Note: after using the inflation kit, you should visit an approved dealer to replace the inflation hose and the bottle of repair product.

Precautions when using the kit

The kit should not be operated for more than 15 consecutive minutes.

Important: a missing or loose valve cap may compromise the tyre seal and cause a loss of pressure. Always use valve caps which are identical to the originals and fully tightened.

Wheel trim with concealed wheel bolts

Remove the wheel trim using the hubcap tool ***1***, by inserting the tool into valve recess ***2***.

To refit it, align it with valve ***2***. Push the retaining hooks in fully, starting with side ***A*** near the valve, followed by ***B*** and ***C***, finishing at ***D*** opposite the valve.

Central clipped wheel trim with concealed wheel bolts

Remove the wheel trim using hubcap tool ***1***, inserting the tool into valve recess ***3*** and pulling.

To refit the trim, turn it so that arrow ***4*** is aligned with recess ***5*** in the wheel rim, and clip the trim in, checking it is completely secure.

Central wheel trim with concealed wheel bolts

Remove the wheel trim using the hubcap tool by inserting tool ***6*** into valve recess ***7***.

To refit the wheel trim, align recess ***7*** with the wheel rim, clip the wheel trim back in place and use tool ***6*** to tighten the screw.

We would advise you to note the number engraved on the tool so that you can replace it if it is lost.

Central wheel trim with concealed wheel bolts

Remove it using hubcap tool ***1***, inserting the tool into recess ***8*** provided.

To refit it, turn it so that it is aligned with the rim and clip it in place.

Central wheel trim with visible wheel bolts *9*

To remove it without removing the wheel, press it at the points indicated by the arrows.

Turn it so that the retaining brackets holding it in place behind the wheel bolts are released.

To refit the hubcap, proceed in reverse order.

Switch on the hazard warning lights.

Keep the vehicle away from traffic and on a level surface where it will not slip (if necessary, place a solid support under the jack base).

Apply the parking brake and engage a gear (first or reverse, or P for automatic transmissions). Ask the passengers to leave the vehicle and to keep away from traffic.

If you have a puncture, replace the wheel as soon as possible.

A tyre which has been punctured should always be inspected (and repaired, where possible) by a specialist.

Vehicles equipped with a jack and wheelbrace

If necessary, remove the wheel trim, refer to the information on “Wheel trims/ Wheels” in this Section. Undo the wheel bolts using wheelbrace **2**. Fit it so that you press downwards rather than pulling upwards.

If the vehicle is not equipped with a jack or wheelbrace, you can obtain these from your approved dealer.

Present the jack horizontally, the jack head must slide in the lower slot in the body, as close as possible to the wheel concerned.

Crank up the jack ***1*** by hand to align the base plate (slightly inwards under the vehicle). Place a plank of wood under the base plate if on soft ground.

To prevent any risk of injury or damage to the vehicle, only crank the jack until the wheel you are replacing is a maximum of 3 centimetres off the ground.

If the vehicle is parked on the hard shoulder, you must warn other road users of your vehicle’s presence with a warning triangle or with other devices as per the legislation applying to the country you are in.

CHANGING A WHEEL (2/2)

Turn the wheelbrace until the wheel lifts off the ground.

Remove the bolts.

Take off the wheel.

Fit the emergency spare wheel on the central hub and turn it to locate the mounting holes in the wheel and the hub.

If bolts are supplied with the emergency spare wheel, only use these bolts for the emergency spare wheel.

Tighten the bolts, checking that the wheel is correctly positioned on its hub and lower the jack.

With the wheels on the ground, tighten the nuts as fully as possible and check the tightness as soon as possible (tightening torque 105 Nm).

Note: ensure that the emergency spare wheel or punctured wheel and the wheel tray are correctly positioned so that the luggage compartment carpet can be properly fitted.

If the vehicle is parked on the hard shoulder, you must warn other road users of your vehicle's presence with a warning triangle or with other devices as per the legislation applying to the country you are in.

Tyre and wheel safety

The tyres are the only contact between the vehicle and the road, so it is essential to keep them in good condition.

You must make sure that your tyres conform to local road traffic regulations.

When they need to be replaced, only tyres of the same make, size, type and profile should be used.

Tyres fitted to the vehicle should either be identical to those fitted originally or conform to those recommended by your approved Dealer.

Maintaining the tyres

The tyres must be in good condition and the tread form must have sufficient depth; tyres approved by our Technical Department have wear warning strips ***1*** which are **indicators moulded into the tread at several points.**

When the tyre tread has been worn to the level of the warning strips, **they become visible *2***: it is **then** necessary to replace your tyres because the tread rubber is now only **1.6 mm deep at most, resulting in poor road holding on wet roads.**

An overloaded vehicle, long journeys by motorway, particularly in very hot weather, or continual driving on poorly surfaced minor roads will lead to more rapid tyre wear and affect safety.

Incidents which occur when driving, such as striking the kerb, may damage the tyres and wheel rims, and could also lead to misalignment of the front or rear axle geometry.

In this case, have the condition of these checked by an approved dealer.

Tyre pressures

Adhere to the tyre pressures (including the emergency spare wheel). The tyre pressures should be checked at least once a month and additionally before any long journey (refer to the label affixed to the edge of the driver's door).

Incorrect tyre pressures lead to abnormal tyre wear and unusually hot running. These are factors which may seriously affect safety and lead to:

– poor roadholding;

– risk of blowouts or throwing a tread.

The tyre pressure depends on the load and speed of use; adjust the pressures according to the conditions of use (refer to the information on "Tyre pressures" in Section 4).

Pressures should be checked when the tyres are cold; ignore higher pressures which may be reached in hot weather or following a fast journey.

If tyre pressures cannot be checked when the tyres are **cold**, assume an increase of **0.2** to **0.3** bar.

Never deflate a hot tyre.

Special note

Depending on the vehicle, there may be an adapter which needs to be positioned on the valve before air is added.

Important: a missing or loose valve cap may compromise the tyre seal and cause a loss of pressure. Always use valve caps which are identical to the originals.

Changing wheels around

This practice is not recommended.

Emergency spare wheel

Refer to the information on the "Emergency spare wheel" and "Changing a wheel" in Section 5.

Fitting new tyres

For safety reasons, this operation must be carried out by a specialist.

Fitting different tyres may change your vehicle as follows:

– it may mean that your vehicle no longer conforms to current regulations;

– It may change the way it handles when cornering;

– It may cause the steering to be heavy;

– it may affect the use of snow chains.

Use in winter

Chains

Snow chains must be fitted to the front wheels.

It is forbidden to fit snow chains to only the rear wheels.

Snow chains may only be fitted to tyres of the same size as those originally fitted to your vehicle.

Only certain chains can be fitted to tyres.

Consult an approved dealer.

Snow or Winter tyres

We would recommend that these be fitted to all **four wheels** to ensure that your vehicle retains maximum adhesion.

Warning: These tyres sometimes have a specific direction of rotation and a maximum speed index which may be lower than the maximum speed of your vehicle.

Studded tyres

This type of equipment may only be used for a limited period and as laid down by local legislation.

It is necessary to observe the speed specified by current legislation.

These tyres must, at a minimum, be fitted to the two front wheels.

In all cases, we would recommend that you contact your approved Dealer who will be able to advise you on the choice of equipment which is most suitable for your vehicle.

28068

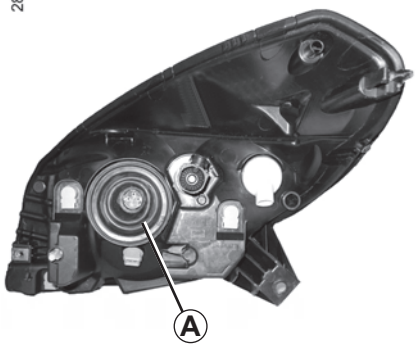

The following bulbs can be replaced. However, we would advise you to have them replaced by an approved dealer if it proves difficult.

Main beam headlights, dipped beam headlights

Remove cover ***A***.

28069

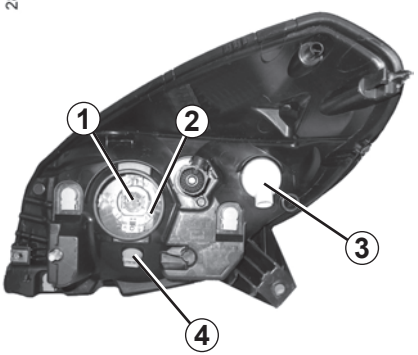

Remove bulb connector ***1***. Release spring ***2*** and take out the bulb.

Bulb type: H4 anti UV bulb (see box).

Do not touch the bulb glass. Hold it by its base.

Direction indicator lights

Turn bulb holder ***3*** a quarter of a turn and take out the bulb.

Bulb type: PY21W.

When the bulb has been changed, make sure you refit the cover correctly.

Front side light

Remove bulb holder ***4*** to access the bulb.

Bulb type: W5W.

To comply with local legislation, or as a precaution, you can obtain an emergency kit containing a set of spare bulbs and fuses from an approved dealer.

The engine may be hot during operations in close proximity. In addition, the engine cooling fan may come on at any moment.

Risk of injury.

The bulbs are under pressure and can break when replaced.

Risk of injury.

Front fog lights *1*

Consult an approved dealer.

Bulb type: H11.

The bulbs are under pressure and can break when replaced.

Risk of injury.

Additional lights

If you wish to fit fog lights or long range headlights to your vehicle, consult an approved dealer.

The engine may be hot during operations in close proximity. In addition, the engine cooling fan may come on at any moment.

Risk of injury.

Any operation on (or modification to) the electrical system must be performed by an approved Dealer since an incorrect connection might damage the electrical equipment (harness, components and in particular the alternator). In addition, your Dealer has all the parts required for fitting these units.

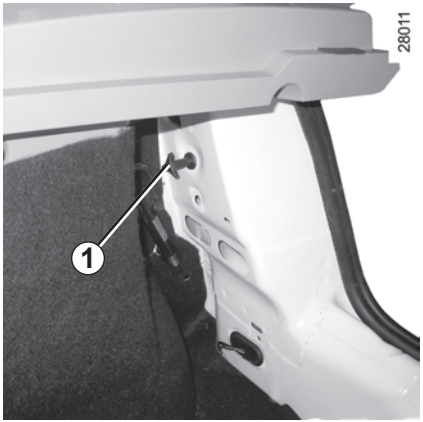

Remove screw ***1*** and detach the rear light cluster from the outside.

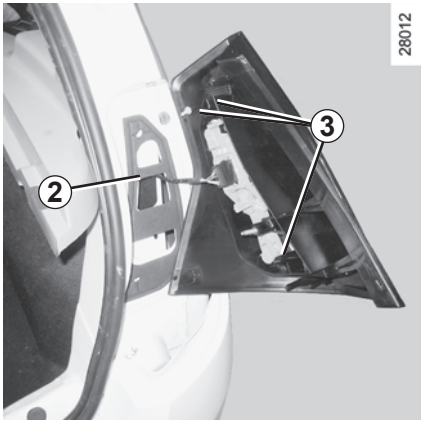

Detach the foam ***2***.

Carefully unclip the bulb holder by pressing on the tabs ***3***.

Refitting

To refit, proceed in the reverse order, taking care not to damage the wiring.

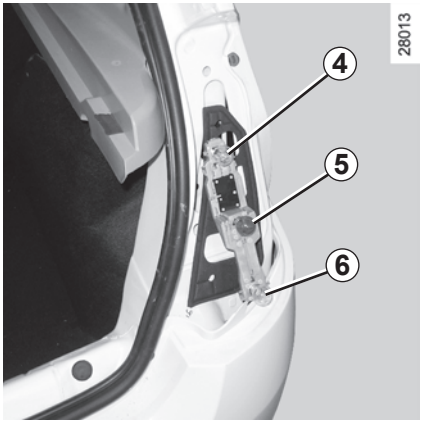

4 **Side light and brake light**
Pear-shaped, bayonet type bulb with two P 21/5 W filaments.

5 **Direction indicator light**
Pear-shaped, bayonet type bulb, P 21 W or PY 21 W (depending on the vehicle).

6 **Reversing light**
Pear-shaped, bayonet type bulb, P 21 W. or
Rear fog light
Pear-shaped, bayonet type P 21 W bulb.

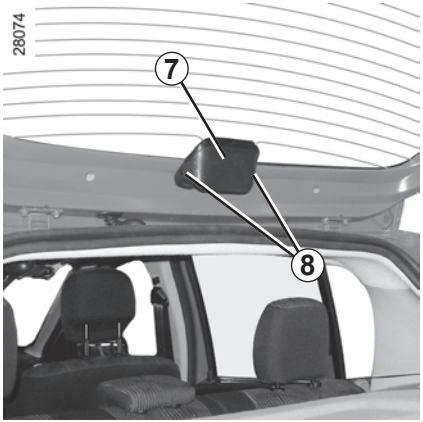

High-level brake light *7*

The bulb for the high-level brake light ***7*** may be accessed through the luggage compartment.
Carefully unclip the bulb holder by pressing on the tabs ***8***.

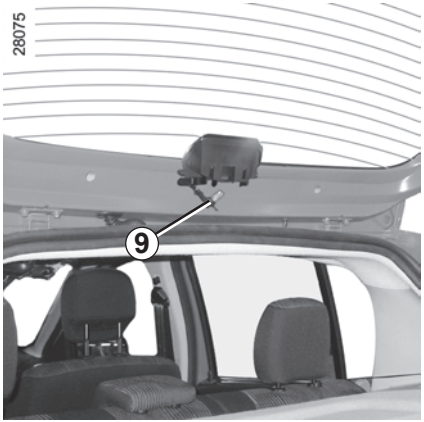

Turn the bulb holder ***9*** a quarter of a turn, release it and take out the bulb.

Bulb type: P 21 W.

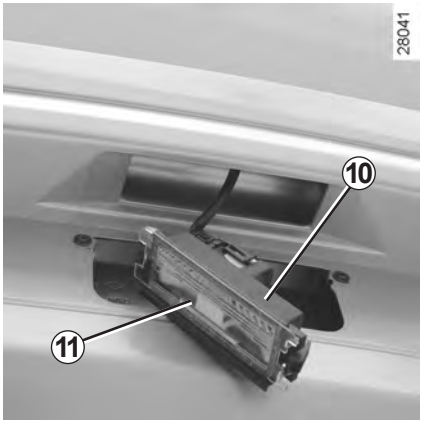

Number plate light *10*

Release it using a flat-blade screw-driver tool or similar.

Unclip the lens ***11*** from the bulb holder to gain access to the bulb.

Bulb type: W 5 W.

The bulbs are under pressure and can break when replaced.

Risk of injury.

INDICATOR LIGHTS: changing bulbs

Unclip the indicator light ***1*** (using a flat-blade screwdriver or similar).

Turn bulb holder ***2*** a quarter of a turn and take out the bulb.

Bulb type with white indicator light: WY5W.

Bulb type with orange indicator light: W5W.

INTERIOR LIGHTS: changing bulbs (1/3)

Courtesy light

Unclip lens ***1*** using a flat-blade screwdriver or similar.

Remove the bulb concerned**.**

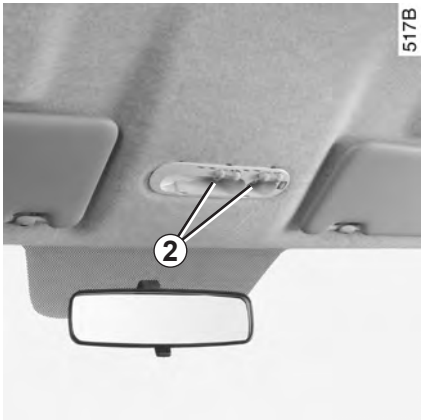

Remove the bulb concerned.

Bulb type *2*: W5W.

The bulbs are under pressure and can break when replaced.

Risk of injury.

Glove box light
(depending on vehicle)

Unclip light ***3*** using a flat-blade screwdriver or similar, by pressing on the tab to move the light towards the inside of the unit.

Disconnect the light.

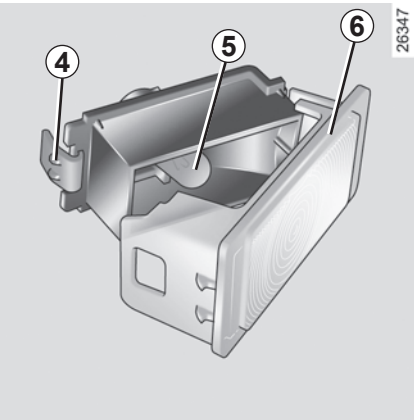

Press tab ***4*** to release lens ***6*** and access bulb ***5***.

Bulb type: W5W.

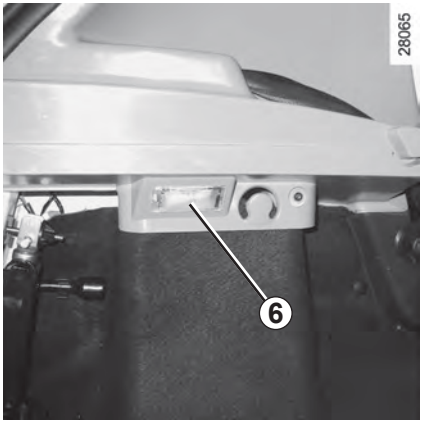

Luggage compartment light

Unclip light ***6*** using a flat-blade screwdriver or similar, by pressing on the tab to move the light towards the inside of the luggage compartment.

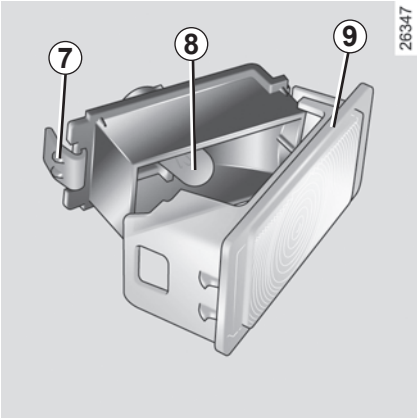

Press tab ***7*** to release lens ***9*** and access bulb ***8***.

Bulb type: W5W.

The bulbs are under pressure and can break when replaced.

Risk of injury.

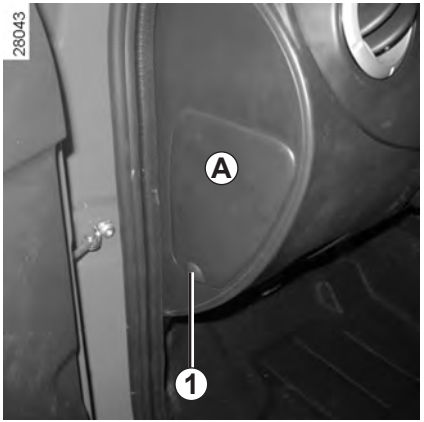

Passenger compartment fuses

If any electrical component does not work, check the condition of the fuses. Unclip flap ***A*** using notch ***1*** to help you.

Use the fuse allocation label on the back of flap ***A*** to identify the fuses.

To comply with current legislation, or as a precaution, you can obtain an emergency kit from your approved dealer containing a set of spare bulbs and fuses.

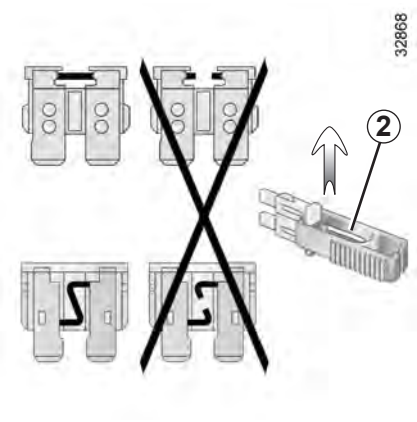

Tweezers *2*

Disconnect the fuse using tweezers ***2***, on the back of flap ***A***.
To remove the fuse from the tweezers, slide the fuse to the side.
It is not advisable to use the free fuse locations.

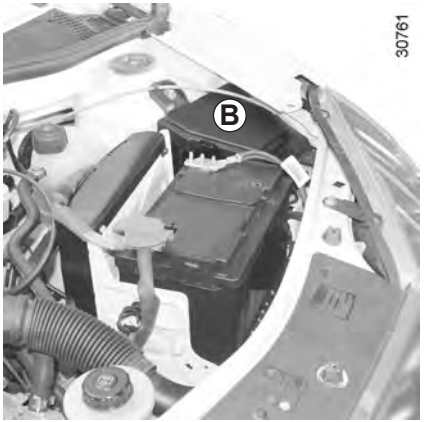

Fuses in engine compartment *B*
Some functions are protected by fuses located in the engine compartment (unit ***B***).
However, because of their reduced accessibility, **we advise you to have your fuses replaced by an approved Dealer**.

Check the fuse in question and **replace it**, if necessary, **with a fuse of the same rating**.

If a fuse is fitted where the rating is too high, it may cause the electrical circuit to overheat (risk of fire) in the event of an item of equipment using an excessive amount of current.

FUSES (2/3)

Allocation of fuses
(the presence of certain fuses DEPENDS ON THE VEHICLE EQUIPMENT LEVEL)

Symbol	Allocation
ABS	ABS
	Radio
STOP	Brake lights
	Air conditioning
	Front fog lights
	Instrument panel Injection
	Windscreen wiper

Symbol	Allocation
	Central locking of doors and tailgate
	Rear screen de-icing
	Not used
	Horn
UCH	Main power supply
	Heated seats
	Heated door mirrors

Symbol	Allocation
AV	Electric front windows
	Interior lighting
	Electric door mirror
	Heating
	Not used
	Air bag
	Right-hand main beam headlight

Allocation of fuses
(the presence of certain fuses DEPENDS ON THE VEHICLE EQUIPMENT LEVEL)

Symbol	Allocation
	Left-hand main beam headlight
	Left-hand dipped beam headlight
	Right-hand dipped beam headlight
	Right-hand side light
	Left-hand side light
	Rear fog light
AR	Electric rear windows

Symbol	Allocation
	Engine immobiliser
	Reversing light
	Power-assisted steering
	Automatic gearbox
CNG	GAS fuel

To avoid all risk of sparks:

– Ensure that any consumers (courtesy lights, etc.) are switched off before disconnecting or reconnecting the battery;

– when charging, stop the charger before connecting or disconnecting the battery;

– to avoid creating a short circuit between the terminals, do not place metal objects on the battery;

– always wait at least one minute after the engine has been switched off before disconnecting a battery;

– make sure that you reconnect the battery terminals after refitting.

Connecting a battery charger

The battery charger must be compatible with a battery with nominal voltage of 12 volts.

Do not disconnect the battery when the engine is running. **Follow the instructions given by the manufacturer of the battery charger you are using.**

When many accessories are fitted to the vehicle, have them connected to the + after ignition feed.

Some batteries may have specific conditions for recharging. Consult your approved dealer. Avoid the risk of sparks, as this could cause a sudden explosion, and always charge the battery in a well-ventilated area.

Risk of serious injury.

Handle the battery with care as it contains sulphuric acid, which must not come into contact with eyes or skin. If it does, wash the affected area with plenty of cold water and consult a doctor, if necessary.

Ensure that naked flames, red hot objects and sparks do not come into contact with the battery as there is a risk of explosion.

The engine may be hot when carrying out operations in close proximity. In addition, the engine cooling fan can come on at any moment.

Risk of injury.

Starting the vehicle using the battery from another vehicle

If you have to use the battery from another vehicle to start, obtain suitable jump leads (with a large cross section) from an approved dealer or, if you already have jump leads, ensure that they are in perfect condition.

The two batteries must have an identical nominal voltage of 12 volts. The battery supplying the current should have a capacity (amp-hours, Ah) which is at least the same as that of the discharged battery.

Ensure that there is no risk of contact between the two vehicles (risk of short circuiting when the positive terminals are connected) and that the discharged battery is properly connected. Switch off your vehicle ignition.

Start the engine of the vehicle supplying the current and run it at an intermediate engine speed.

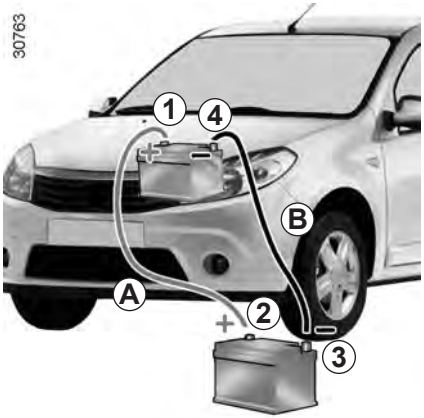

Connect the positive (+) lead ***A*** to (+) terminal ***1*** of the discharged battery, then to (+) terminal ***2*** of the battery supplying the current.

Connect the negative (–) lead ***B*** to (–) terminal ***3*** of the battery supplying the current and then to (–) terminal ***4*** of the discharged battery.

Start the engine as normal. As soon as it is running, disconnect leads ***A*** and ***B*** in the reverse order (***4-3-2-1***)

Check that there is no contact between leads ***A*** and ***B*** and that the positive lead ***A*** is not touching any metal parts on the vehicle supplying the current.

Risk of serious injury and/or damage to the vehicle.

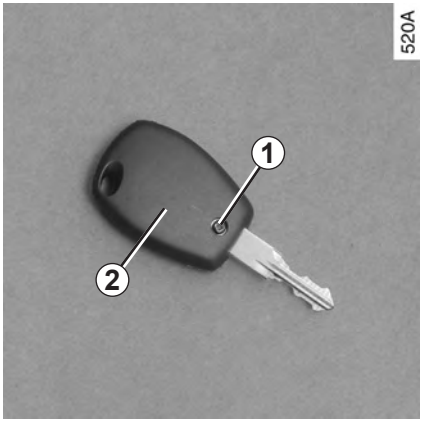

Replacing the battery

Unscrew screw ***1*** then unclip cover ***2***.

Batteries can be obtained from an approved Dealer. These batteries have a service life of approximately two years.

Check that there is no dye on the battery: risk of an incorrect electrical contact.

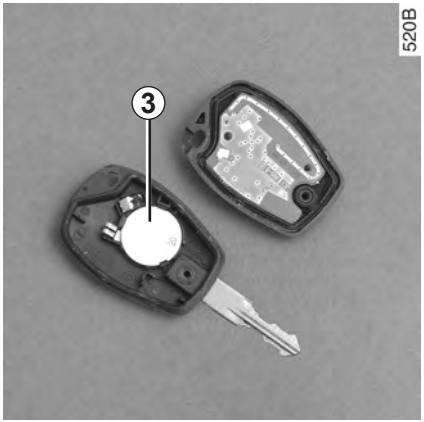

Replace battery ***3*** according to the direction marked on the cover.

Note: It is not advisable to touch the electronic circuit in the key cover when replacing the battery.

Battery type: **CR 2016**.

When refitting, ensure that the cover is correctly clipped on and the screw tightened.

Do not throw away your used batteries; give them to an organisation responsible for collecting and recycling batteries.

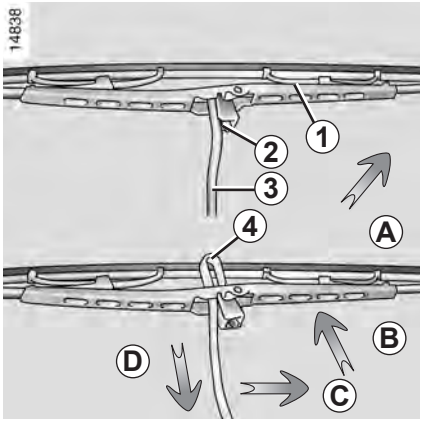

Replacing windscreen wiper blades *1*

– With the ignition off, lift wiper arm ***3***.

– Turn the blade horizontally (movement ***A***).

– Press tab ***2*** and slide the wiper blade downwards (movement ***D***) until hook ***4*** on the wiper arm is released.

– Slide the blade (movement ***C***) then lift it (movement ***B***) to release it.

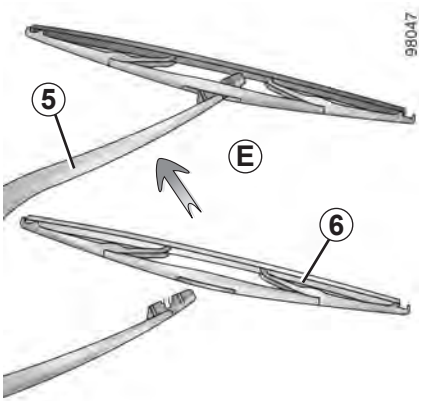

Replacing the rear screen wiper blade (hinged door)

– With the ignition off, lift wiper arm ***5***.

– Pivot blade ***6*** until some resistance is met.

– Pull the blade to release it (movement ***E***).

Refitting a front or rear wiper blade

To refit the wiper blade, proceed in reverse order to removal. Make sure that the blade is correctly locked in position.

Check the condition of the wiper blades. You are responsible for their service life:

– clean the blades, windscreen and rear screen regularly with soapy water;

– do not use them when the windscreen or rear screen are dry;

– free them from the windscreen or rear screen when they have not been used for a long time.

– In frosty weather, make sure that the wiper blades are not stuck by ice (to avoid the risk of the motor overheating).

– Check the condition of the wiper blades.
Replace the wiper blades as soon as they begin to lose efficiency (approximately once a year).

Whilst changing the blade, take care not to drop the arm onto the window after it has been removed as this may break the window.

Towing procedure

The steering wheel must be unlocked and the ignition key must be in position M (ignition on) to provide stop lights and hazard warning lights on the towed vehicle. Always switch on the lights when driving at night. Remove any trailer.

It is also essential to observe the towing regulations imposed by current legislation in each country, and not to exceed the towable weight for your vehicle. Consult an approved dealer.

Only use:

- **at the front, towing hitch *1*** (from the luggage compartment) **and towing point *3*.**
- **At the rear, towing point *4*.**

These towing points may only be used for pulling the vehicle, never for lifting it either directly or indirectly.

Do not remove the key from the ignition when the vehicle is being towed.

Front towing point *3*

Unclip cover ***A*** using a flat-blade screwdriver or similar under the cover. Screw in towing hitch ***1*** fully, at first by hand, then tighten it using wheelbrace ***2*** stored in the luggage compartment.

When the engine is stopped, steering and braking assistance are not operational.

Rear towing point *4*

- Use a rigid towing bar. If a rope or cable is used (where the law allows this), the vehicle being towed must be able to brake.
- A vehicle must not be towed if it is not fit to be driven.
- Avoid accelerating or braking suddenly when towing, as this may result in damage being caused to the vehicle.
- When towing a vehicle, it is advisable not to exceed **15 mph (25 km/h)**.

Towing a vehicle with an automatic gearbox

With the engine switched off, the transmission is no longer lubricated. It is preferable to tow this type of vehicle on a trailer or tow it with the front wheels off the ground.

Under exceptional circumstances, you may tow the vehicle with all four wheels on the ground, only going forward, with the gear lever in the **N** position, and for a distance not exceeding 30 miles (50 km).

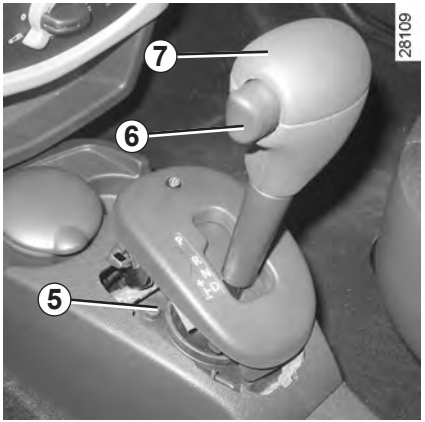

If the lever is stuck in **P**, even though you are depressing the brake pedal, the lever can be released manually.

To do this, unclip the cover at the base of the lever.

Press simultaneously on the button ***5*** on the gaiter and unlocking button ***6*** located on the lever ***7***.

When storing the tools, ensure they are securely replaced in the luggage compartment, in their original position.

Do not leave the tools unsecured inside the vehicle as they may come loose under braking.

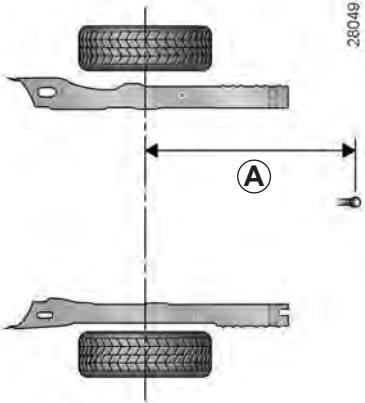

A = 701.2 mm.

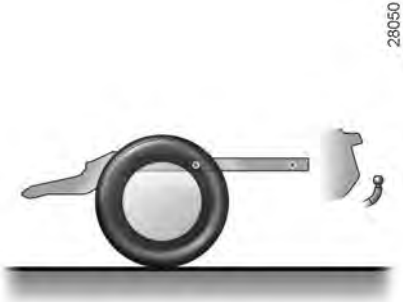

Permissible nose weight, maximum permissible towing weight braked and unbraked:

Refer to the information on “Weights” in Section 6.

Refer to the manufacturer’s instructions for information on how to fit and operate the towing equipment.

Please keep these instructions with the rest of the vehicle documentation.

Radio location *1*

If your vehicle is not fitted with an audio system, one can be fitted and locations have been provided for:

– the radio ***1***;

– front speakers ***2***;

– rear speakers ***3***.

To install any equipment, please consult an approved dealer.

Unclip and remove storage compartment ***1***.

Location for front speaker *2*

Unclip cover ***2*** using a flat-blade screwdriver or similar.

Location for rear speaker *3*

Unclip cover ***3*** using a flat-blade screwdriver or similar.

– In all cases, it is very important to follow the manufacturer's instructions carefully.

– The specifications of the brackets and wires (available from our network) vary depending on the equipment level of your vehicle and the type of radio. Consult an approved dealer to find out the correct part number.

– No work may be carried out on the vehicle's electrical or radio circuits, except by approved Dealers: an incorrectly connected system may result in damage being caused to the electrical equipment and/or the components connected to it.

Before fitting an electrical or electronic device (particularly for transmitters/receivers: frequency bandwidth, power level, position of the aerial etc.), ensure that it is compatible with your vehicle.

Contact an approved dealer for this information.

Use of transmission/ receiving devices (telephones, CB equipment etc.).

Telephones and CB equipment with integrated aerials may cause interference to the original electronic systems fitted to the vehicle: it is advisable only to use equipment with an external aerial.

Furthermore, we remind you of the need to comply with the legislation in force concerning the use of such equipment.

Fitting after-market accessories

If you wish to install accessories on the vehicle: consult an approved dealer.

Also, to ensure the correct operation of your vehicle, and to avoid any risk to your safety, we recommend that you use only specific accessories, designed for your vehicle, which are the only accessories for which the manufacturer will provide a warranty.

If you are using an anti-theft device, only attach it to the brake pedal.

Electrical and electronic accessories

– Connect accessories with a maximum power of 120 Watts only.

Fire hazard.

– No work may be carried out on the vehicle's electrical or radio circuits, except by approved dealers: an incorrectly connected system may result in damage being caused to the electrical equipment and/or the components connected to it;

– if the vehicle is fitted with any aftermarket electrical equipment, make sure that the unit is correctly protected by a fuse. Establish the rating and position of this fuse.

OPERATING FAULTS (1/5)

The following advice will enable you to carry out quick, temporary repairs. For safety reasons you should always contact an approved dealer as soon as possible.

The starter is activated	POSSIBLE CAUSES	WHAT TO DO
Warning lights dim or fail to come on; the starter does not run.	Battery terminals disconnected, oxidised or incorrectly secured.	Retighten them, reconnect them or clean them if they are oxidised.
	Battery discharged or worn.	Connect another battery to the faulty battery. Refer to the information on “Battery: troubleshooting” in Section 5 or replace the battery if necessary. Do not push the vehicle if the steering column is locked.
The engine will not start.	Starting conditions are not fulfilled.	Refer to the information on “Starting/stopping the engine in Section 2.
The steering column remains locked.	Steering wheel locked.	To unlock, gently move the key and the steering wheel (refer to the information on the “Ignition switch” in Section 2).

OPERATING FAULTS (2/5)

On the road	POSSIBLE CAUSES	WHAT TO DO
Vibrations.	Tyres not inflated to correct pressures, incorrectly balanced or damaged.	Check the tyre pressures; if this is not the cause, have their condition checked by an approved dealer.
Coolant boiling in the coolant reservoir.	Mechanical fault: cylinder head gasket damaged, faulty coolant pump.	Stop the engine. Contact an approved dealer.
	Engine cooling fan not working.	Contact an approved dealer.
Smoke under the bonnet.	Short circuit or cooling system leak.	Stop, switch off the ignition, stand away from the vehicle and contact an approved Dealer.
The oil pressure warning light comes on:		
on a bend or under braking	The engine oil level is too low.	Top up the engine oil (refer to the information on “Engine oil level, topping up/refilling” in Section 4).
at idle speed	Low oil pressure.	Go to your nearest approved dealer.
The oil pressure warning light takes a long time to go out or remains lit during acceleration.	Loss of oil pressure.	Stop the vehicle: contact an approved dealer.

OPERATING FAULTS (3/5)

On the road	POSSIBLE CAUSES	WHAT TO DO
Abnormal white smoke from the exhaust	Mechanical fault: damaged cylinder head gasket. or	Stop the engine. Contact an approved dealer.
	This is not necessarily a fault. Smoke may be caused by regeneration of the particle filter.	Refer to the information on “Special features of diesel versions” in Section 2.
The power-assisted steering becomes heavy.	Belt broken.	Have the belt replaced.
	No power-assisted steering oil	For maintenance operations on the power-assisted steering, contact an approved dealer.

Radiator: If there is a significant lack of coolant, remember that it must never be topped up using cold coolant while the engine is very warm. After any procedure on the vehicle which has involved even partial draining of the cooling system, it must be refilled with a new mixture prepared in the correct proportions. Reminder: only products approved by the Technical Department may be used for this purpose.

OPERATING FAULTS (4/5)

On the road	POSSIBLE CAUSES	WHAT TO DO
Whistling	Roof aerial poorly positioned.	Position the aerial.
The engine overheats. The coolant temperature indicator light comes on.	Engine cooling fan not working.	Stop the vehicle, switch off the engine and contact an approved dealer.
	Coolant leaks.	Stop the vehicle, switch off the engine and check the coolant reservoir: it should contain fluid. If there is no coolant, consult an approved dealer as soon as possible.
The oil change warning light remains lit after an oil change.	Warning not reset after oil change.	Reset the warning after changing the oil; refer to the information on “Resetting the warning after an oil change” in Section 4.

Radiator: If there is a significant lack of coolant, remember that it must never be topped up using cold coolant while the engine is very warm. After any procedure on the vehicle which has involved even partial draining of the cooling system, it must be refilled with a new mixture prepared in the correct proportions. Reminder: only products approved by the Technical Department may be used for this purpose.

OPERATING FAULTS (5/5)

Electrical equipment	POSSIBLE CAUSES	WHAT TO DO
The wipers do not work.	Wiper blades stuck.	Free the blades before using the wipers.
	Faulty electrical circuit.	Consult an approved dealer.
The wiper does not stop.	Faulty electrical controls.	Consult an approved dealer.
Direction indicators flashing more quickly.	Bulb blown.	Replace the bulb.
The direction indicators do not work.	Faulty electrical circuit.	Consult an approved dealer.
The headlights do not switch on or off.	Faulty electrical circuit or control.	Consult an approved dealer
Traces of condensation in the lights.	This is not a fault. Traces of condensation are a natural phenomenon caused by variations in temperature. These traces soon disappear when the lights are switched on.	

Section 6: Technical specifications

Vehicle identification plates 6.2
Engine specifications 6.4
Dimensions 6.5
Weights/Towing weights 6.6
Replacement parts and repairs 6.7
Service sheets 6.8
Anti-corrosion check 6.14

VEHICLE IDENTIFICATION PLATES

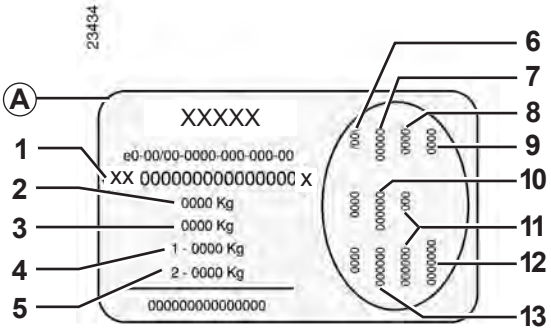

Quote the details given on identification plate *A* on all letters or orders.

The presence and location of the information depends on the vehicle.

Vehicle identification plate *A*

1 Vehicle type and chassis number.
2 MAM (Maximum Authorised Mass).
3 GTW (Gross train weight = vehicle fully loaded, with trailer).
4 MPAW (Maximum permissible all-up weight) front axle.
5 Maximum permissible weight on rear axle.
6 Technical specifications of vehicle.
7 Vehicle paint reference.
8 Equipment level.
9 Vehicle type.
10 Trim code.
11 Additional equipment specification.
12 Fabrication number.
13 Interior trim code.

ENGINE IDENTIFICATION PLATES

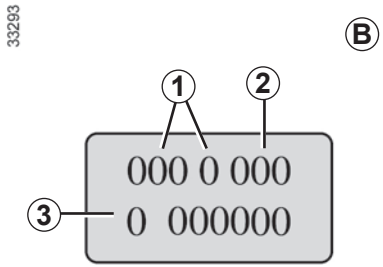

The information shown on the vehicle identification plate should be quoted on all correspondence or orders.

***B* – Engine plate or engine label**
(Location varies depending on engine)
1 Engine type
2 Engine suffix
3 Engine number

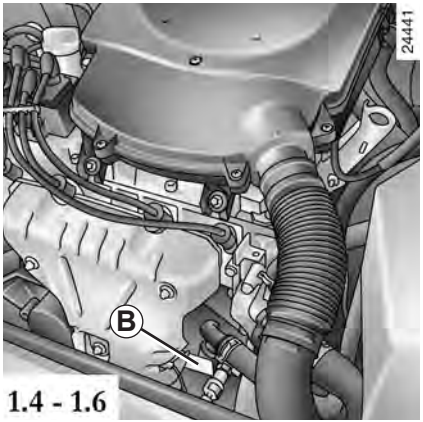

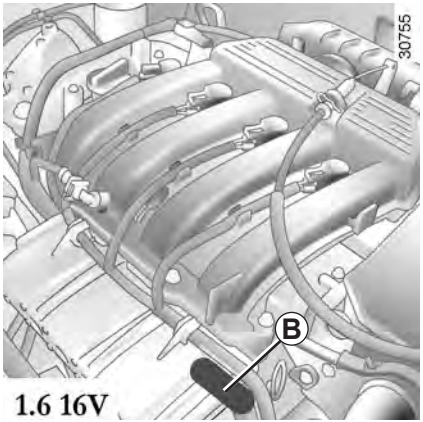

ENGINE SPECIFICATIONS

Versions	1.2 16V	1.4	1.6	1.6 16V	1.5 dCi
Engine type (see engine plate)	D4F	K7J	K7M	K4M	K9K Turbo
Cubic capacity (cc)	1,149	1,390	1,598		1,461
Type of fuel **Octane rating**	It is **essential** that you use unleaded petrol of the octane rating stated on the label inside the fuel filler flap. If not available, for a limited time only, use unleaded fuel: – with an octane rating of 91 for a label with the ratings 95 or 98; – with an octane rating of 87 for a label showing 91, 95 or 98.				Diesel. The label located in the fuel filler flap indicates the authorised fuels.
Spark plugs	Only use the spark plugs specified for your vehicle's engine. The type should be marked on a label affixed inside the engine compartment. If it is not, contact an approved dealer. Fitting spark plugs which are not to specification may damage the engine.				

DIMENSIONS (in metres)

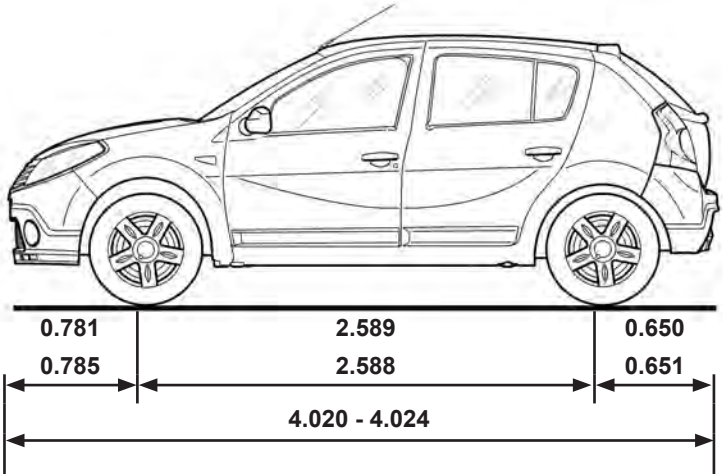

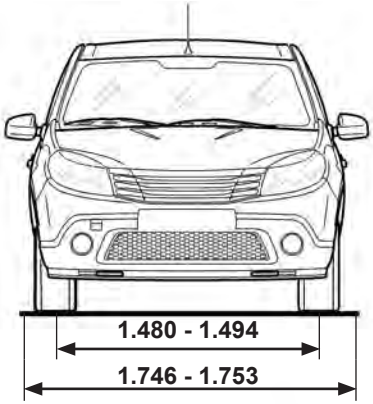

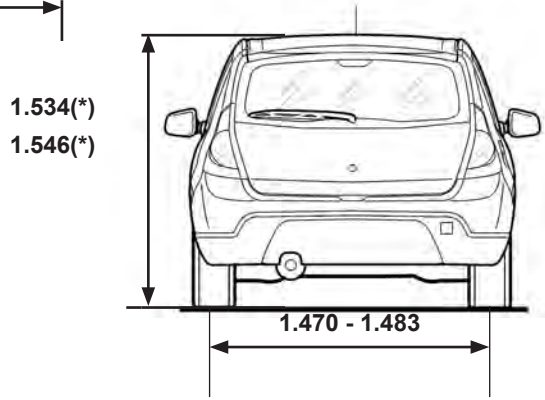

(*) Unladen

WEIGHTS (in kg)

The weights indicated for a basic vehicle without options: they vary depending on the your vehicle's equipment. Consult your approved Dealer.

Maximum permissible all-up weight (MMAC) **Maximum permissible all-up weight (MMTA)** **Total train weight (MTR)**	Weights are indicated on the vehicle identification plate (refer to the information on "Vehicle identification plates" in Section 6)
Braked Trailer Weight*	obtained by calculating: **MTR - MMAC**
Unbraked Trailer Weight*	525
Permissible nose weight*	60
Maximum permissible load on roof	80 kg (including carrying device)

*** Towing weight (towing a caravan, boat, etc.)**

Towing is prohibited when the GTW - MAM calculation is equal to zero, or when the GTW is equal to zero (or is not listed) on the identification plate.

- It is important to comply with the towing weights, governed by local legislation in each country and, in particular, laid down in the Road Traffic Regulations. Contact an approved Dealer about any towing equipment.
- When towing, under no circumstances may **the total train weight (vehicle + trailer) be exceeded**. However the following is permitted:
  - the Maximum permissible weight at the rear may be exceeded by no more than 15%,
  - the maximum permissible all-up weight may be exceeded by no more than 10% or 100 kg (whichever occurs first).

  In either case, the maximum speed of the towing assembly must not exceed 60 mph (100 km/h) and the tyre pressure must be increased by 0.2 bar (3 PSI).
- The engine output and climbing capability are reduced with altitude. We recommend that the maximum load be reduced by 10% at an altitude of 1,000 metres and by an additional 10% for each 1,000 metres thereafter.

Weight transfer on (except utility version) depending on local laws
If the Maximum Authorised Mass of the vehicle has not been reached, up to 300 kg can be transferred to the braked trailer, within the limits of the Gross Train Weight.

SPARE PARTS AND REPAIRS

Original parts are based on strict specifications and are subject to highly-specialised tests. Therefore, they are of at least the same level of quality as the parts fitted originally.

If you always fit genuine replacement parts to your vehicle, you will ensure that it performs well. Furthermore, repairs carried out within the manufacturer's Network using original parts are guaranteed according to the conditions set out on the reverse of the repair order.

SERVICE SHEETS (1/6)

VIN: .....

Date: Miles (Km):	Invoice number:	Comments/miscellaneous
Type of operation: Service □ ..... □ **Anti-corrosion check:** OK □ Not OK* □ *See specific page	**Stamp**	

Date: Miles (Km):	Invoice number:	Comments/miscellaneous
Type of operation: Service □ ..... □ **Anti-corrosion check:** OK □ Not OK* □ *See specific page	**Stamp**	

Date: Miles (Km):	Invoice number:	Comments/miscellaneous
Type of operation: Service □ ..... □ **Anti-corrosion check:** OK □ Not OK* □ *See specific page	**Stamp**	

SERVICE SHEETS (2/6)

VIN: .....

Date: Miles (Km):	Invoice number:	Comments/miscellaneous
Type of operation: Service □ ..... □ **Anti-corrosion check:** OK □ Not OK* □ *See specific page	**Stamp**	

Date: Miles (Km):	Invoice number:	Comments/miscellaneous
Type of operation: Service □ ..... □ **Anti-corrosion check:** OK □ Not OK* □ *See specific page	**Stamp**	

Date: Miles (Km):	Invoice number:	Comments/miscellaneous
Type of operation: Service □ ..... □ **Anti-corrosion check:** OK □ Not OK* □ *See specific page	**Stamp**	

SERVICE SHEETS (3/6)

VIN: .....

Date: Miles (Km):	Invoice number:	Comments/miscellaneous
Type of operation: Service □ ..... □ **Anti-corrosion check:** OK □ Not OK* □ *See specific page	**Stamp**	

Date: Miles (Km):	Invoice number:	Comments/miscellaneous
Type of operation: Service □ ..... □ **Anti-corrosion check:** OK □ Not OK* □ *See specific page	**Stamp**	

Date: Miles (Km):	Invoice number:	Comments/miscellaneous
Type of operation: Service □ ..... □ **Anti-corrosion check:** OK □ Not OK* □ *See specific page	**Stamp**	

SERVICE SHEETS (4/6)

VIN: .....

Date: Miles (Km):	Invoice number:	Comments/miscellaneous
Type of operation: Service □ ..... □ **Anti-corrosion check:** OK □ Not OK* □ *See specific page	**Stamp**	

Date: Miles (Km):	Invoice number:	Comments/miscellaneous
Type of operation: Service □ ..... □ **Anti-corrosion check:** OK □ Not OK* □ *See specific page	**Stamp**	

Date: Miles (Km):	Invoice number:	Comments/miscellaneous
Type of operation: Service □ ..... □ **Anti-corrosion check:** OK □ Not OK* □ *See specific page	**Stamp**	

SERVICE SHEETS (5/6)

VIN: .....

Date: Miles (Km):	Invoice number:	Comments/miscellaneous
Type of operation: Service □ ..... □ **Anti-corrosion check:** OK □ Not OK* □ *See specific page	**Stamp**	

Date: Miles (Km):	Invoice number:	Comments/miscellaneous
Type of operation: Service □ ..... □ **Anti-corrosion check:** OK □ Not OK* □ *See specific page	**Stamp**	

Date: Miles (Km):	Invoice number:	Comments/miscellaneous
Type of operation: Service □ ..... □ **Anti-corrosion check:** OK □ Not OK* □ *See specific page	**Stamp**	

SERVICE SHEETS (6/6)

VIN: .....

Date: Miles (Km):	Invoice number:	Comments/miscellaneous
Type of operation: Service □ ..... □ **Anti-corrosion check:** OK □ Not OK* □ *See specific page	**Stamp**	

Date: Miles (Km):	Invoice number:	Comments/miscellaneous
Type of operation: Service □ ..... □ **Anti-corrosion check:** OK □ Not OK* □ *See specific page	**Stamp**	

Date: Miles (Km):	Invoice number:	Comments/miscellaneous
Type of operation: Service □ ..... □ **Anti-corrosion check:** OK □ Not OK* □ *See specific page	**Stamp**	

ANTICORROSION CHECK (1/5)

If the continuation of the warranty is subject to repair, it is indicated below.

VIN: .....

Corrosion repair operation to be carried out: Date of repair:		**Stamp**
Repair to be carried out: Date of repair:		**Stamp**
Repair to be carried out: Date of repair:		**Stamp**

ANTICORROSION CHECK (2/5)

If the continuation of the warranty is subject to repair, it is indicated below.

VIN: .....

Corrosion repair operation to be carried out: Date of repair:		**Stamp**
Repair to be carried out: Date of repair:		**Stamp**
Repair to be carried out: Date of repair:		**Stamp**

ANTICORROSION CHECK (3/5)

If the continuation of the warranty is subject to repair, it is indicated below.

VIN: .....

Corrosion repair operation to be carried out: Date of repair:		**Stamp**
Repair to be carried out: Date of repair:		**Stamp**
Repair to be carried out: Date of repair:		**Stamp**

ANTICORROSION CHECK (4/5)

If the continuation of the warranty is subject to repair, it is indicated below.

VIN: .....

Corrosion repair operation to be carried out: Date of repair:		**Stamp**
Repair to be carried out: Date of repair:		**Stamp**
Repair to be carried out: Date of repair:		**Stamp**

ANTICORROSION CHECK (5/5)

If the continuation of the warranty is subject to repair, it is indicated below.

VIN: .....

Corrosion repair operation to be carried out: Date of repair:		**Stamp**
Repair to be carried out: Date of repair:		**Stamp**
Repair to be carried out: Date of repair:		**Stamp**

ALPHABETICAL INDEX (1/4)

A

ABS ..... 2.12 – 2.13
accessories 5.33
accessories - installation 5.33
accessories socket 3.14
adjusting your driving position ..... 1.11 → 1.14, 3.17
advice on antipollution ..... 5.22 → 5.24
air bag ..... 1.15 → 1.20
    activating the front passenger air bags 1.34
    deactivating the front passenger air bags 1.32
air conditioning ..... 3.4 – 3.5, 3.9
air vents ..... 3.2 – 3.3
anti-corrosion check ..... 6.14 → 6.18
anti-corrosion protection 4.13
anti-lock braking system: ABS ..... 2.12 – 2.13
antipollution
    advice ..... 2.6 → 2.8
ashtrays 3.14
automatic gearbox (use) ..... 2.14 → 2.16
automatic gearbox selector lever ..... 2.14 → 2.16

B

battery 4.12
    troubleshooting ..... 5.25 – 5.26
battery (remote control) 5.27
bonnet ..... 4.2 – 4.3
brake fluid 4.7
bulbs
    changing ..... 5.14 → 5.21

C

capacity of mechanical components 4.4, 4.12
catalytic converter 2.4
central door locking 1.5
changing a bulb ..... 5.14 → 5.21
changing a wheel ..... 5.9 – 5.10
changing gear ..... 2.14 → 2.16
child booster seat ..... 1.21 → 1.23
child restraint/seat ..... 1.21 → 1.31
child safety ..... 1.2, 1.6, 1.21 → 1.31
child seats ..... 1.21 → 1.31
children ..... 1.5 – 1.6, 1.14
cigar lighter 3.14
clock 1.10
closing the doors 1.6
control instruments ..... 1.10, 1.40 → 1.50
controls ..... 1.36 → 1.39
courtesy light 3.10

D

dashboard ..... 1.36 → 1.39
de-icing ..... 1.53 → 1.55
    rear screen 1.55
demisting
    rear screen 3.7
dimensions 6.5
dipstick 4.4
doors ..... 1.5 – 1.6
driver's position ..... 1.36 → 1.39
driving ..... 2.2 → 2.8, 2.11 → 2.16

E

electric door locking 1.5
electric windows ..... 3.11 – 3.12
emergency brake assist 2.13
emergency spare wheel ..... 5.3, 5.11 → 5.13
engine
    technical specifications 6.4
engine coolant 4.8
engine immobiliser 1.7
engine immobiliser (switch) 2.2
engine oil 4.4

engine oil grade ..... 4.5 – 4.6
engine specifications 6.4
environment 2.9

F
faults
operating faults ..... 5.34 → 5.38
filter 4.10
air filter 4.10
diesel filter 1.58, 4.10
oil filter 4.6
particle filter 2.5
passenger compartment filter 4.10
fitting a radio 5.32
fittings ..... 3.15 – 3.16
fog lights 1.50
front passenger air bag deactivation 1.32
front seat adjustment 1.9
front seats
adjustment 1.9
fuel
advice on fuel economy ..... 2.6 → 2.8
grade 1.56, 6.4
fuel economy ..... 2.6 → 2.8
fuel filler cap 1.56
fuel grade 1.56
fuel level 1.44
fuel priming bulb 1.58
fuel tank ..... 1.56 → 1.58
fuel tank capacity 1.56
fuses ..... 5.22 → 5.24

G
gear lever 2.10
glove box 3.15
grab handle 3.13

H
handbrake 2.11
hands-free telephone integrated control 3.22
hazard warning lights signal 1.52
headlight beam adjustment 1.51
headlight flashers 1.52
headrest 1.8, 3.17
heating and air conditioning system ..... 3.2 → 3.5, 3.9
heating system ..... 3.2 → 3.9
horn 1.52

I
ignition switch 2.2
indicator lights 5.18
indicators 1.52, 5.14
indicators:
direction indicators 1.52
instrument panel ..... 1.40 → 1.44
interior trim
maintenance ..... 4.15 – 4.16

J
jack ..... 5.2, 5.9 – 5.10

K
keys ..... 1.2 – 1.3
replacing the battery 5.27

L
levels ..... 4.4, 4.7 → 4.9
levels:
engine oil 4.5
lifting the vehicle
changing a wheel ..... 5.2 – 5.3, 5.7 → 5.10
lighting:
exterior ..... 1.49 – 1.50, 5.14 → 5.18

interior ..... 3.10, 5.19 → 5.21
lights ..... 1.49 → 1.51
additional 5.15
adjustment 1.51
lights:
adjusting 1.51
brake lights ..... 5.16 – 5.17
dipped beam headlights 1.49, 5.14
direction indicators 1.52, 5.14
fog lights 1.50, 5.15
hazard warning 1.52
main beam headlights 1.49, 5.14
reversing lights ..... 5.16 – 5.17
side lights 1.49, 5.14
locking the doors 1.4, 1.6

M
maintenance:
bodywork ..... 4.13 – 4.14
interior trim ..... 4.15 – 4.16
mechanical ..... 4.4, 4.7 → 4.9, 4.12, 6.8 → 6.13
methods of restraint in addition to the front seat belts ..... 1.15 → 1.18, 1.20
mirrors 3.13
multimedia equipment 3.22

N
navigation 3.22
navigation system 3.22

O
oil change 4.6
opening the doors 1.6
operating faults ..... 5.34 → 5.38
overspeed buzzer 1.43

P
paintwork
maintenance ..... 4.13 – 4.14
reference 6.2
power-assisted steering 2.11, 4.9
power-assisted steering pump 4.9
practical advice ..... 1.58, 5.2 – 5.3, 5.7 → 5.38
puncture ..... 5.3, 5.9 – 5.10

R
radio 3.22
fitting a radio 5.32
radio frequency remote control/key
use 1.2
rear bench seat 3.18
rear parcel shelf 3.21
rear screen
demisting 1.37, 1.42, 1.54, 3.7
rear view mirrors 1.35
remote control door locking unit ..... 1.2 → 1.4
replacement parts 6.7
reverse gear
selecting 2.10
roof bars 3.20
roof rack
roof bars 3.20
running in 2.2

S
seat belts ..... 1.14 → 1.20
service sheets ..... 6.8 → 6.13
signals and lights ..... 1.49 – 1.50
speakers
location 5.32
special features of diesel versions 2.5
special features of petrol vehicles 2.4

starting ..... 2.2 – 2.3
starting the engine 2.3
steering wheel
adjustment 1.10
storage compartment ..... 3.15 – 3.16
storage compartments ..... 3.15 – 3.16
sun visor 3.13

T
tailgate 3.19, 3.21
tanks and reservoirs
brake fluid 4.7
coolant 4.8
tanks and reservoirs:
windscreen washer 4.8
technical specifications ..... 6.2 → 6.7
telephone 3.22
temperature regulation ..... 3.4 – 3.5
towing 6.6
breakdown ..... 5.29 – 5.30
towing equipment 5.31
towing a caravan 6.6
towing hitch ..... 5.2, 5.29 – 5.30
towing weights 6.6
transporting children ..... 1.21 → 1.31
transporting objects
in the luggage compartment 3.19
trims ..... 5.7 – 5.8
trip computer and warning system ..... 1.45 → 1.48
tyre inflation kit ..... 5.4 → 5.6
tyre pressure 4.11, 5.12
tyre pressures 4.11
tyres ..... 4.11, 5.11 → 5.13

V
vehicle identification ..... 6.2 – 6.3
vehicle identification plates ..... 6.2 – 6.3
ventilation ..... 3.4 → 3.8
heating and air conditioning system 3.9

W
warning buzzer 1.50
warning lights ..... 1.40 → 1.48
washing ..... 4.13 – 4.14
weight 6.6
weights 6.6
wheelbrace 5.2
windscreen washer 1.53, 4.9
wiper blades 5.28
wipers 1.53
blades 5.28