LIGHTING SYSTEM

PARTS LOCATION

HATCHBACK:

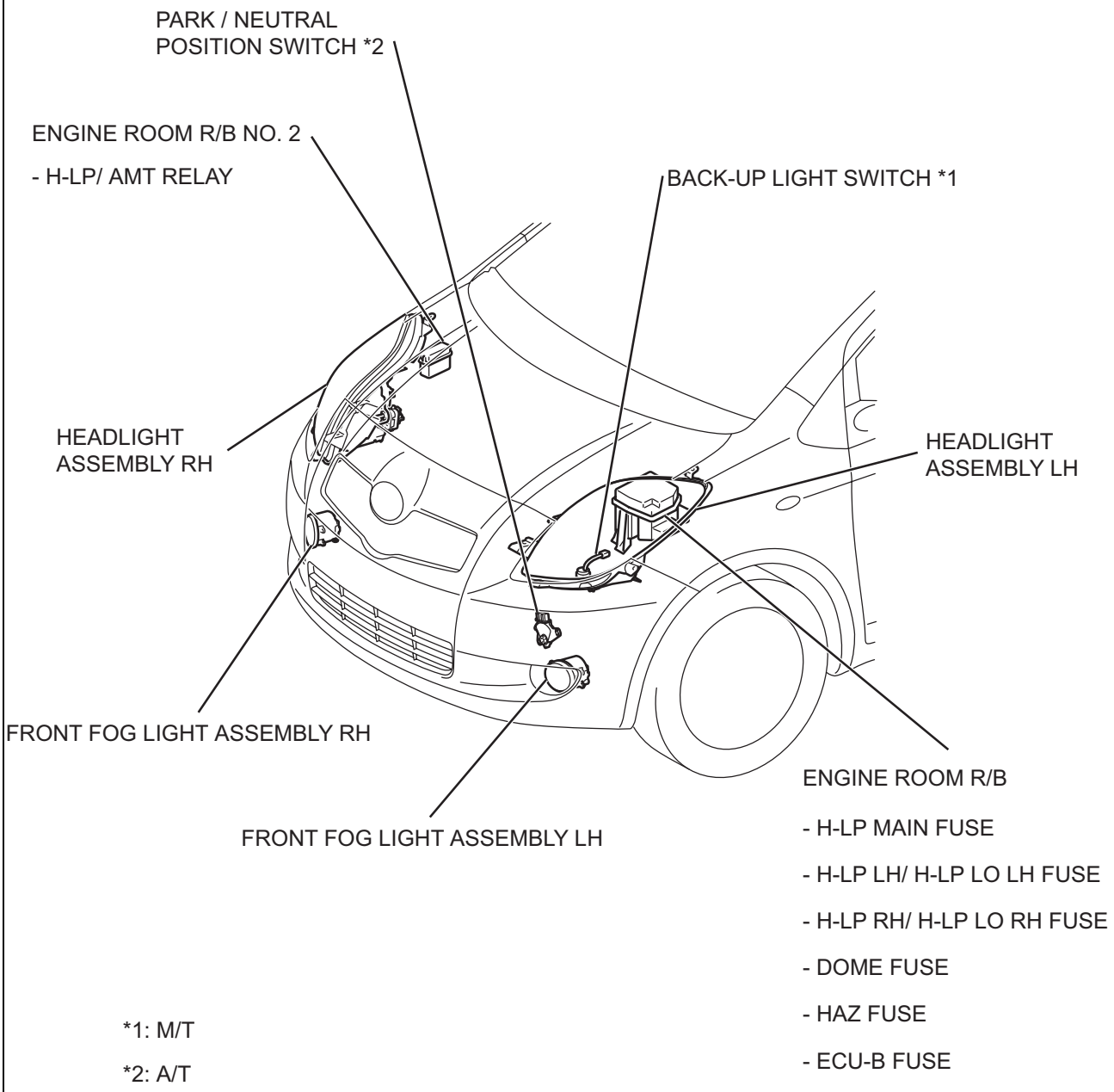

*1: M/T

*2: A/T

B125736E02

LI

SEDAN:

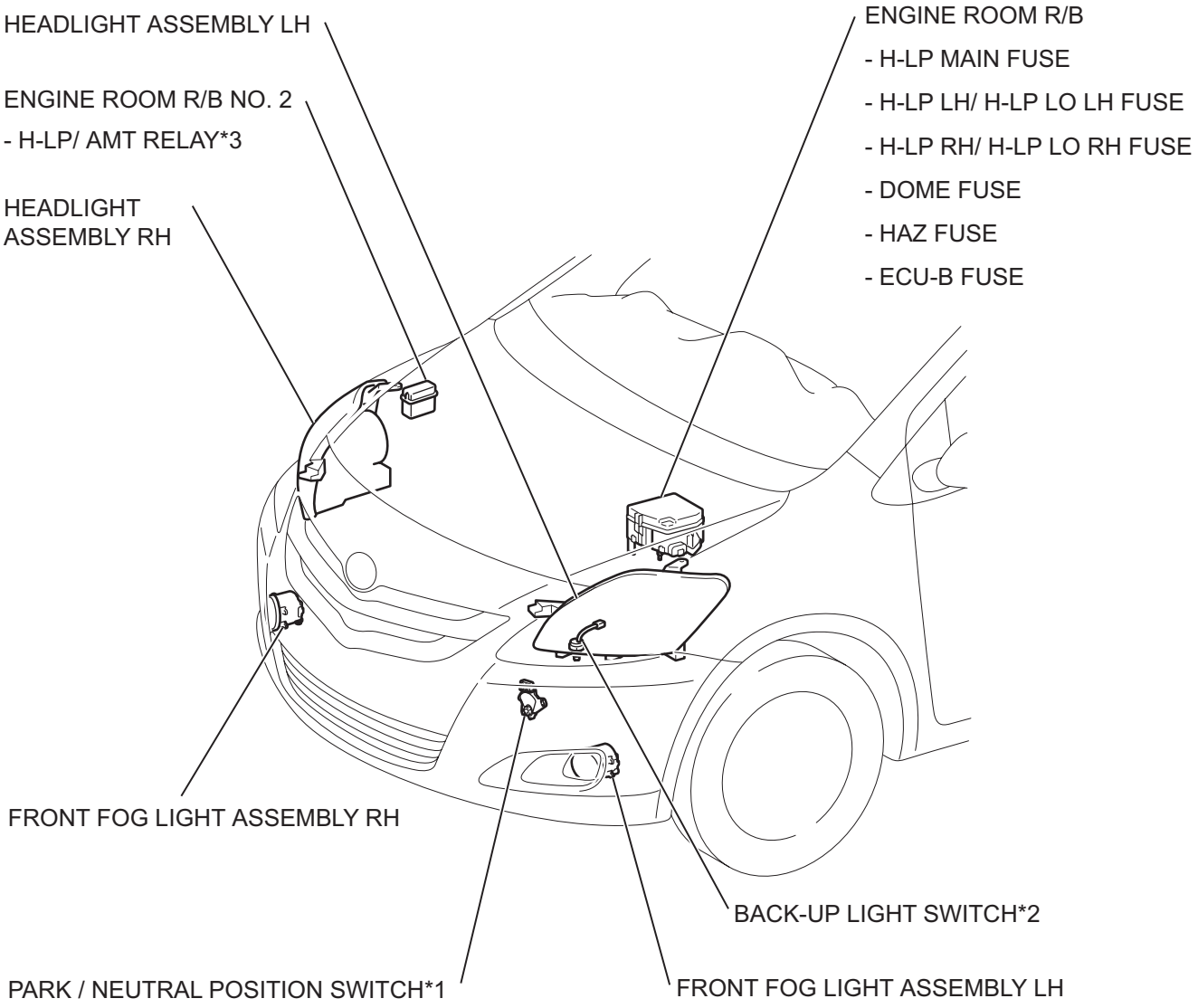

*1: A/T

*2: M/T

*3: W/ DAYTIME RUNNING LIGHT SYSTEM

B142264E01

HATCHBACK:

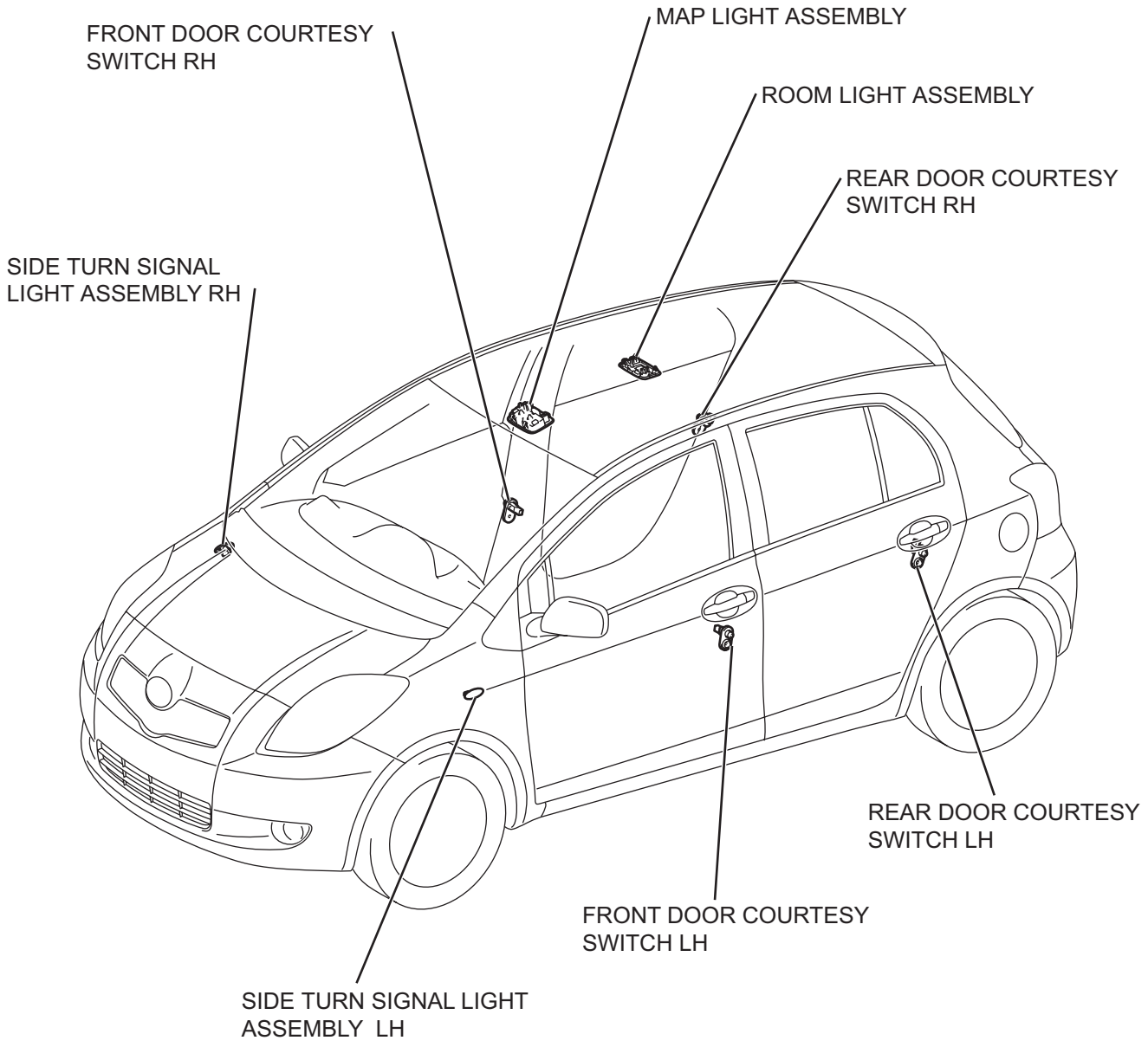

B125737E04

SEDAN:

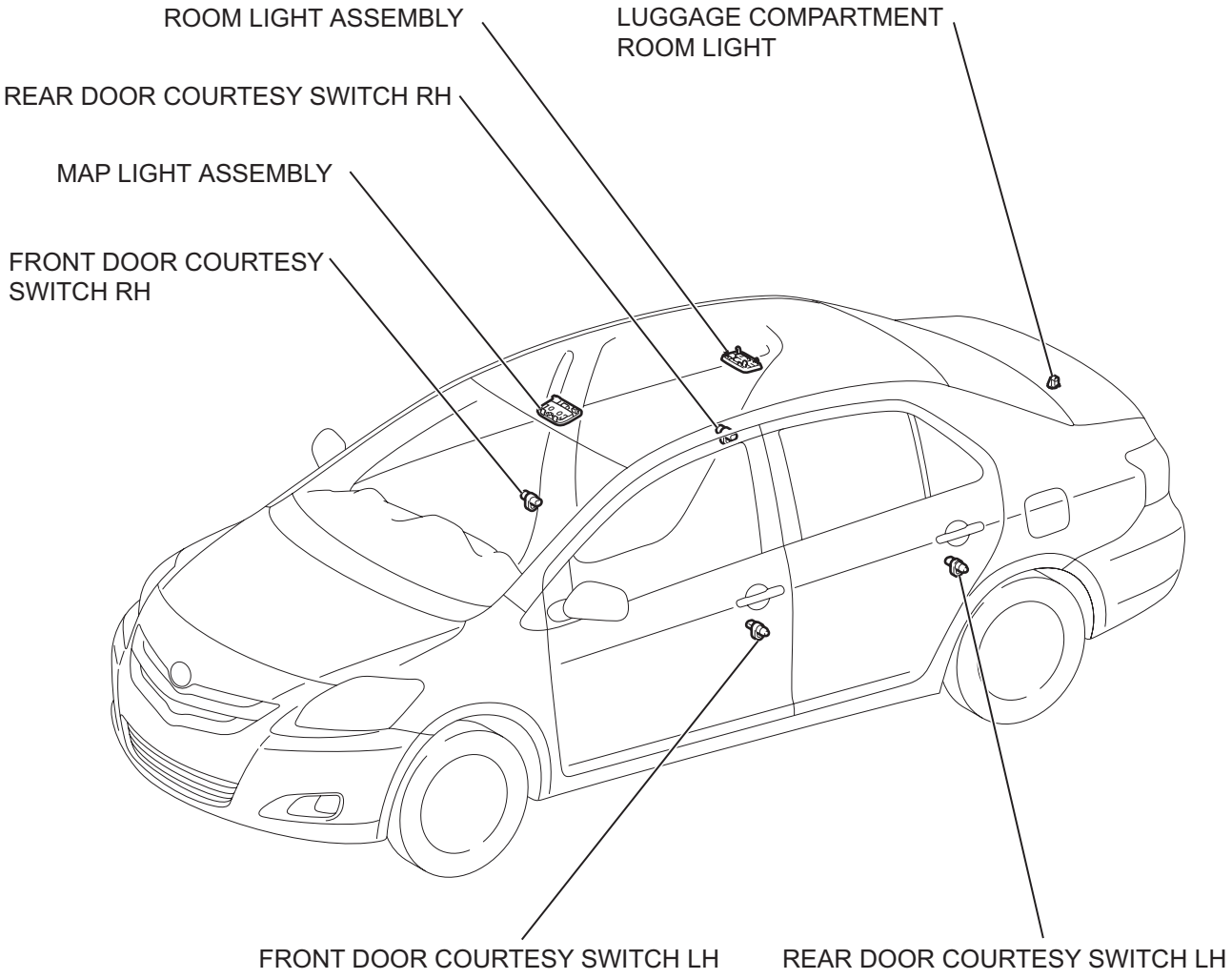

B142265E01

HATCHBACK:

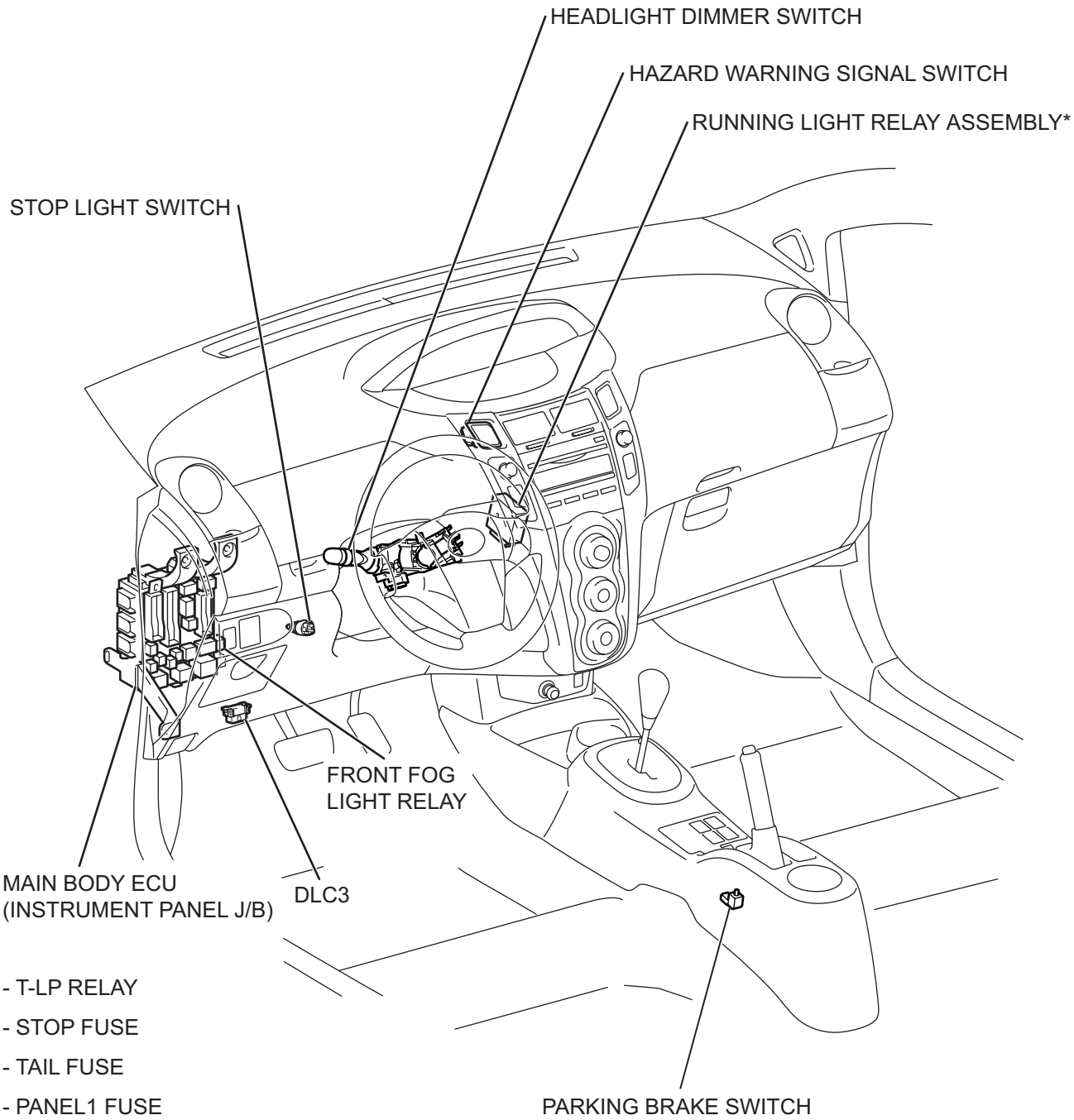

- T-LP RELAY
- STOP FUSE
- TAIL FUSE
- PANEL1 FUSE
- FRONT FOG FUSE
- ECU-IG FUSE
- GAUGE FUSE
- FLASH RELAY

*: W/ DAYTIME RUNNING LIGHT SYSTEM

B125739E02

SEDAN:

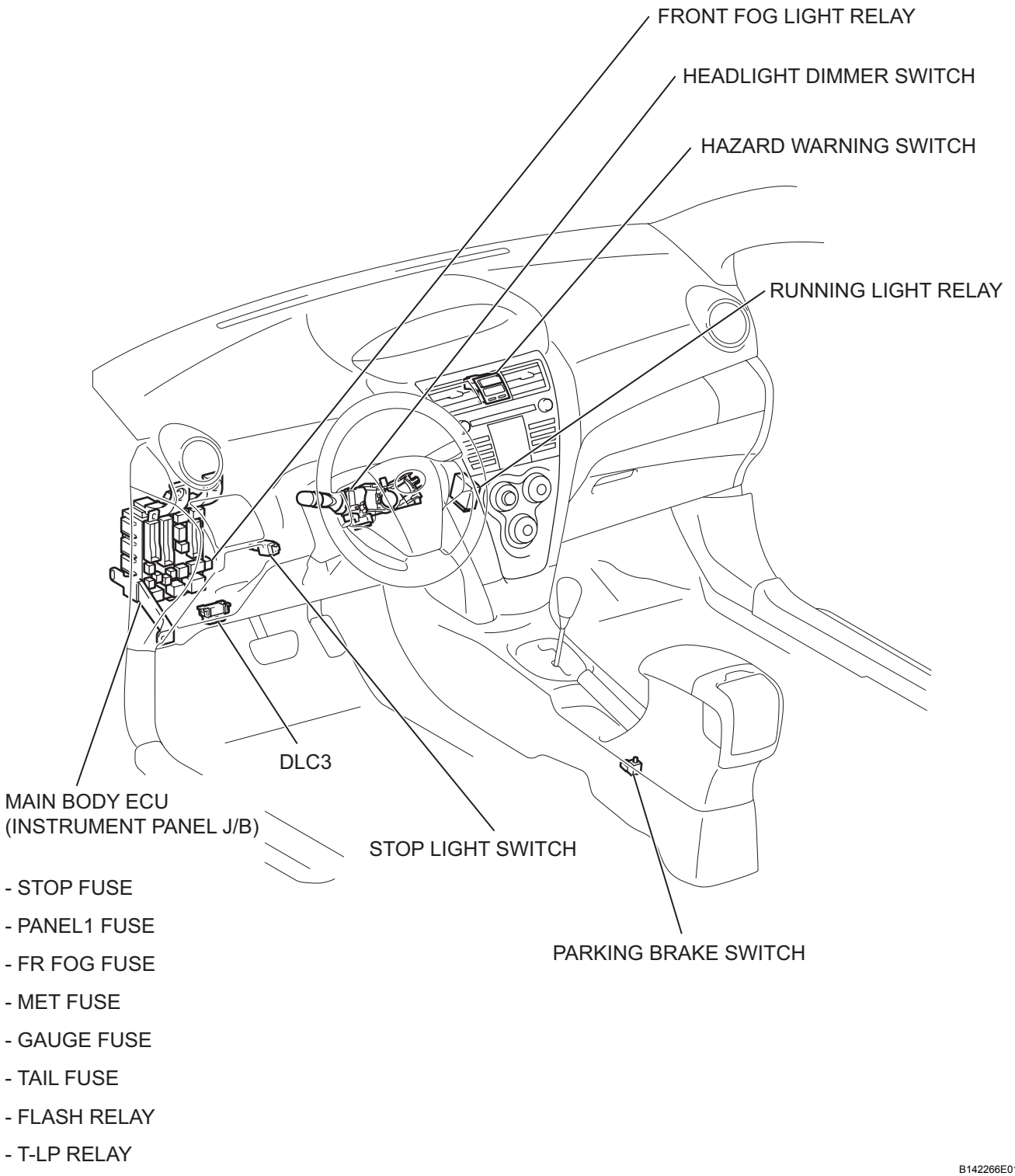
FRONT FOG LIGHT RELAY
HEADLIGHT DIMMER SWITCH
HAZARD WARNING SWITCH
RUNNING LIGHT RELAY
DLC3
MAIN BODY ECU
(INSTRUMENT PANEL J/B)
STOP LIGHT SWITCH
PARKING BRAKE SWITCH
- STOP FUSE
- PANEL1 FUSE
- FR FOG FUSE
- MET FUSE
- GAUGE FUSE
- TAIL FUSE
- FLASH RELAY
- T-LP RELAY
B142266E01

HATCHBACK:

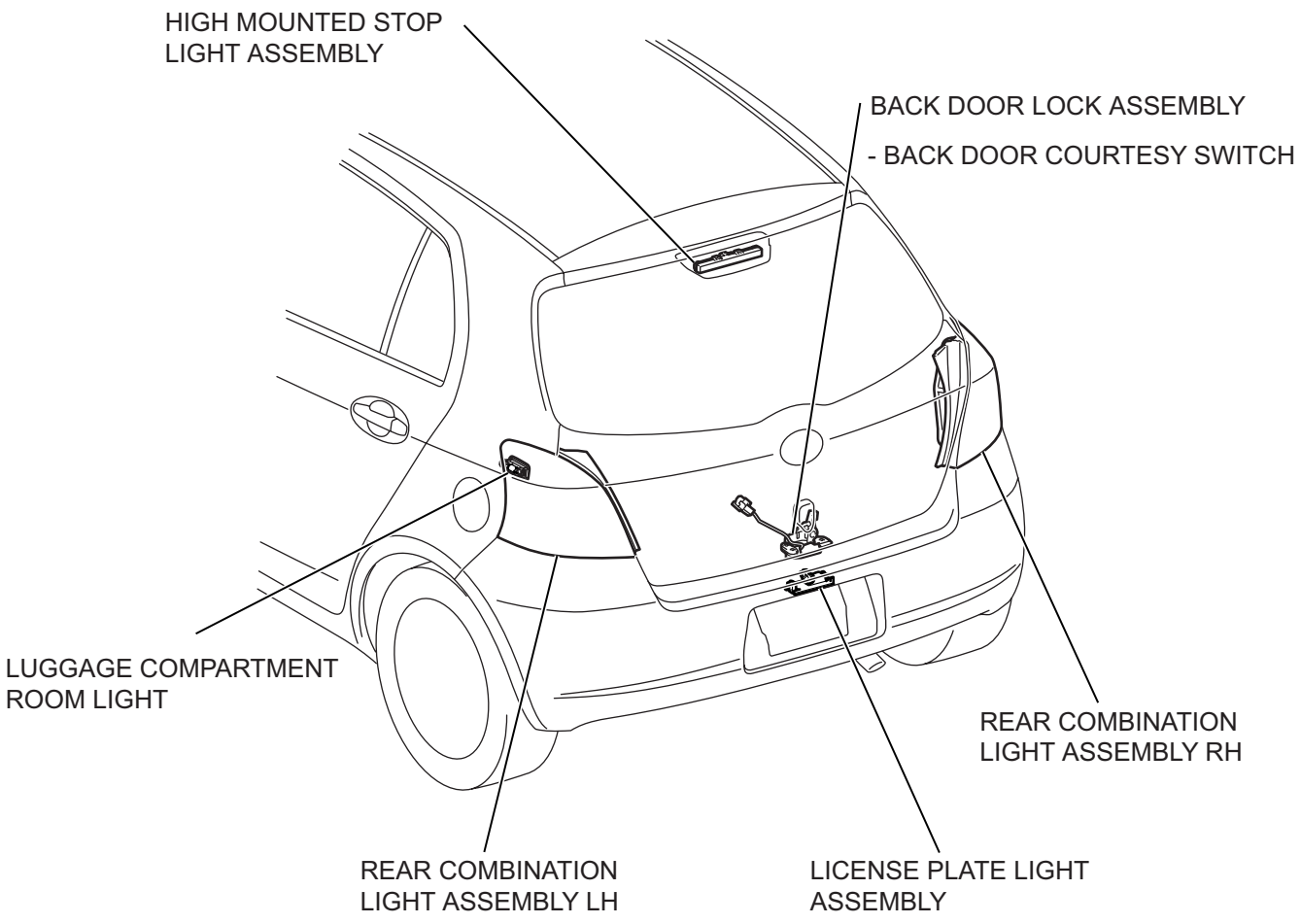

B142267E01

SEDAN:

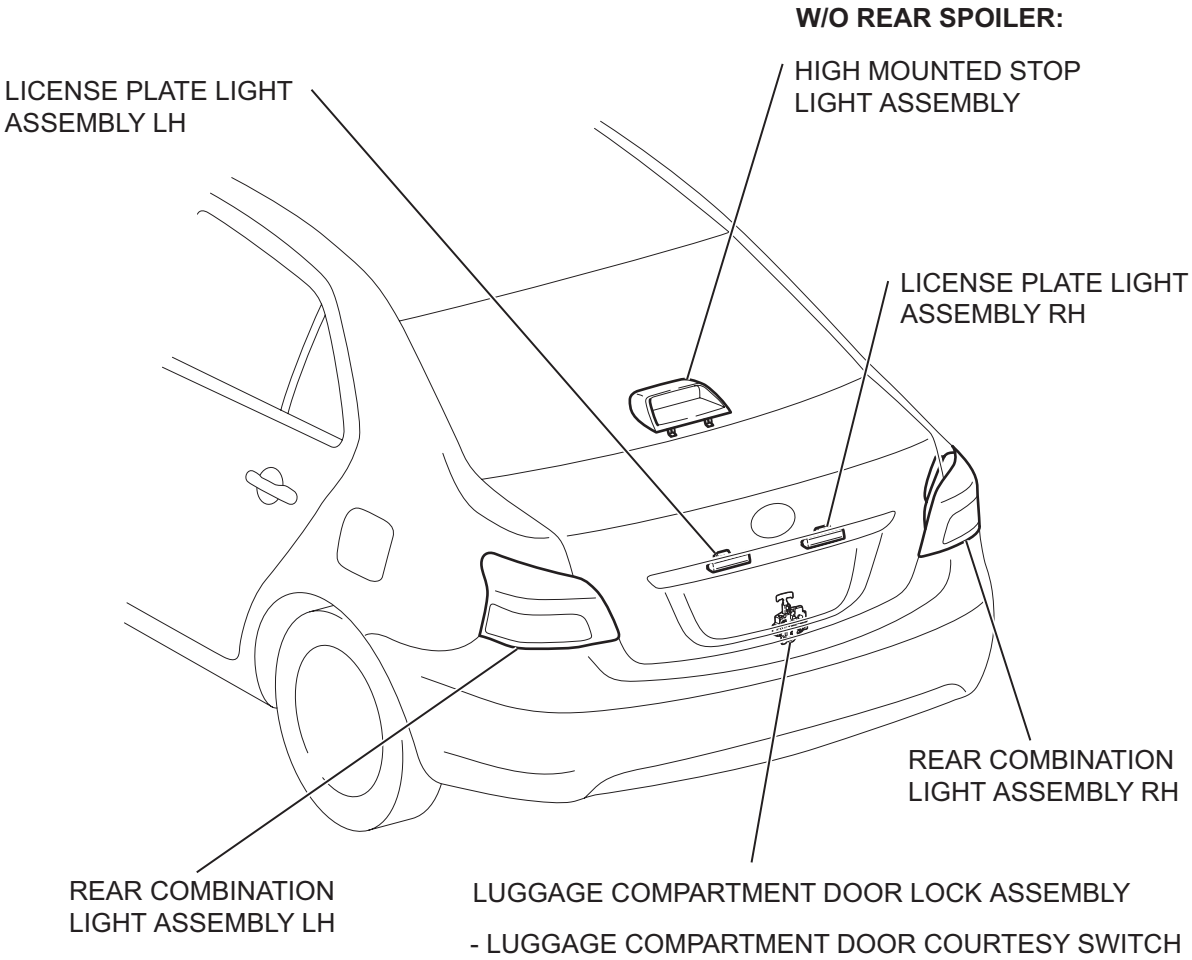

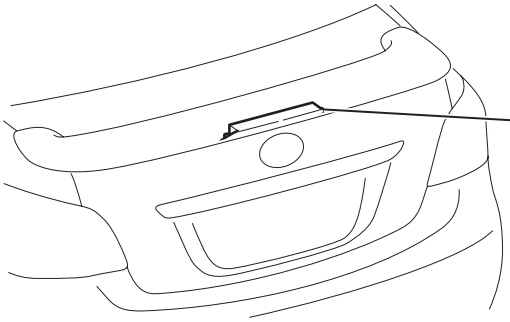

W/ REAR SPOILER:

HIGH MOUNTED STOP LIGHT ASSEMBLY

B142268E01

SYSTEM DIAGRAM

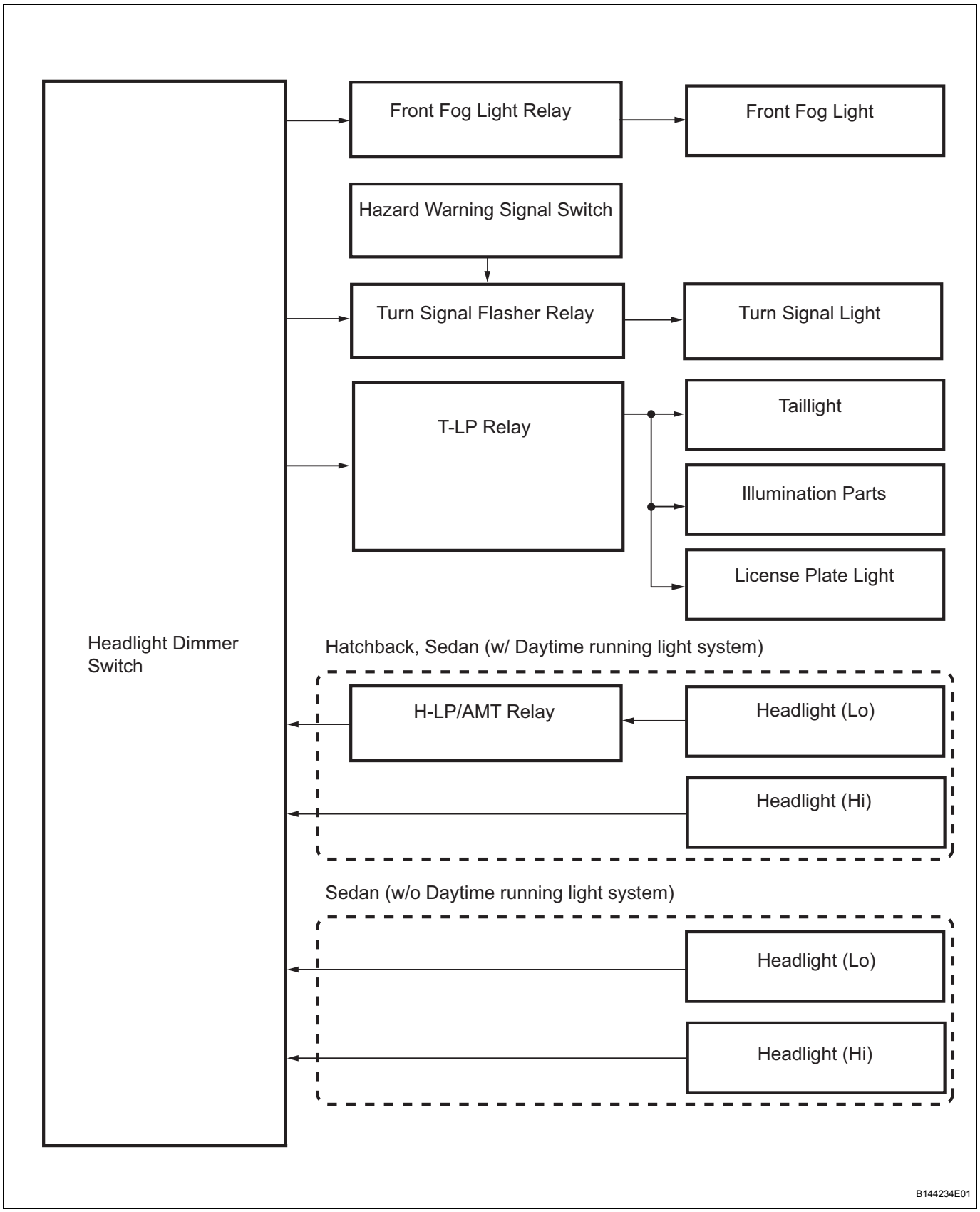

Hatchback:

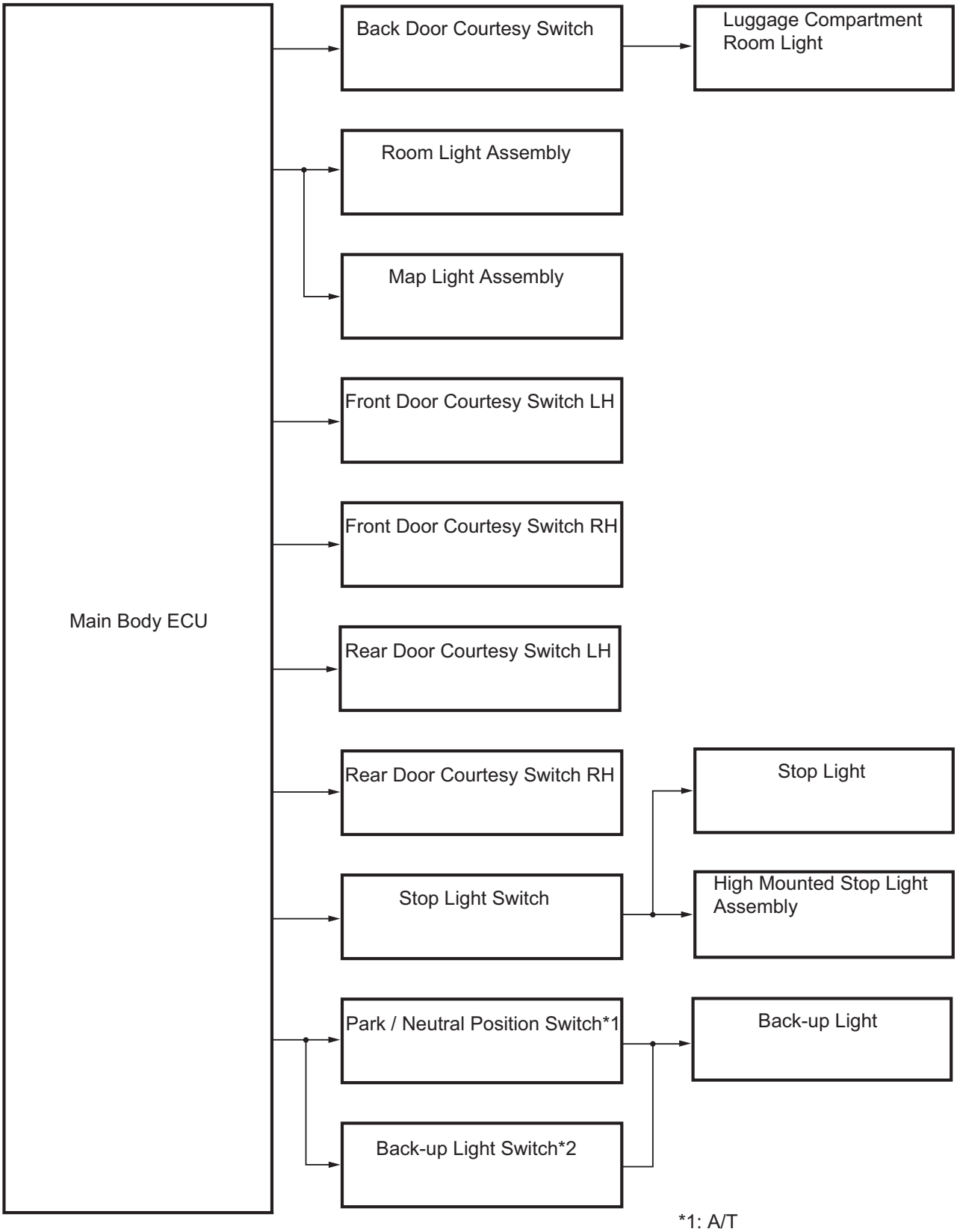

*1: A/T

*2: M/T

E122896E05

Sedan:

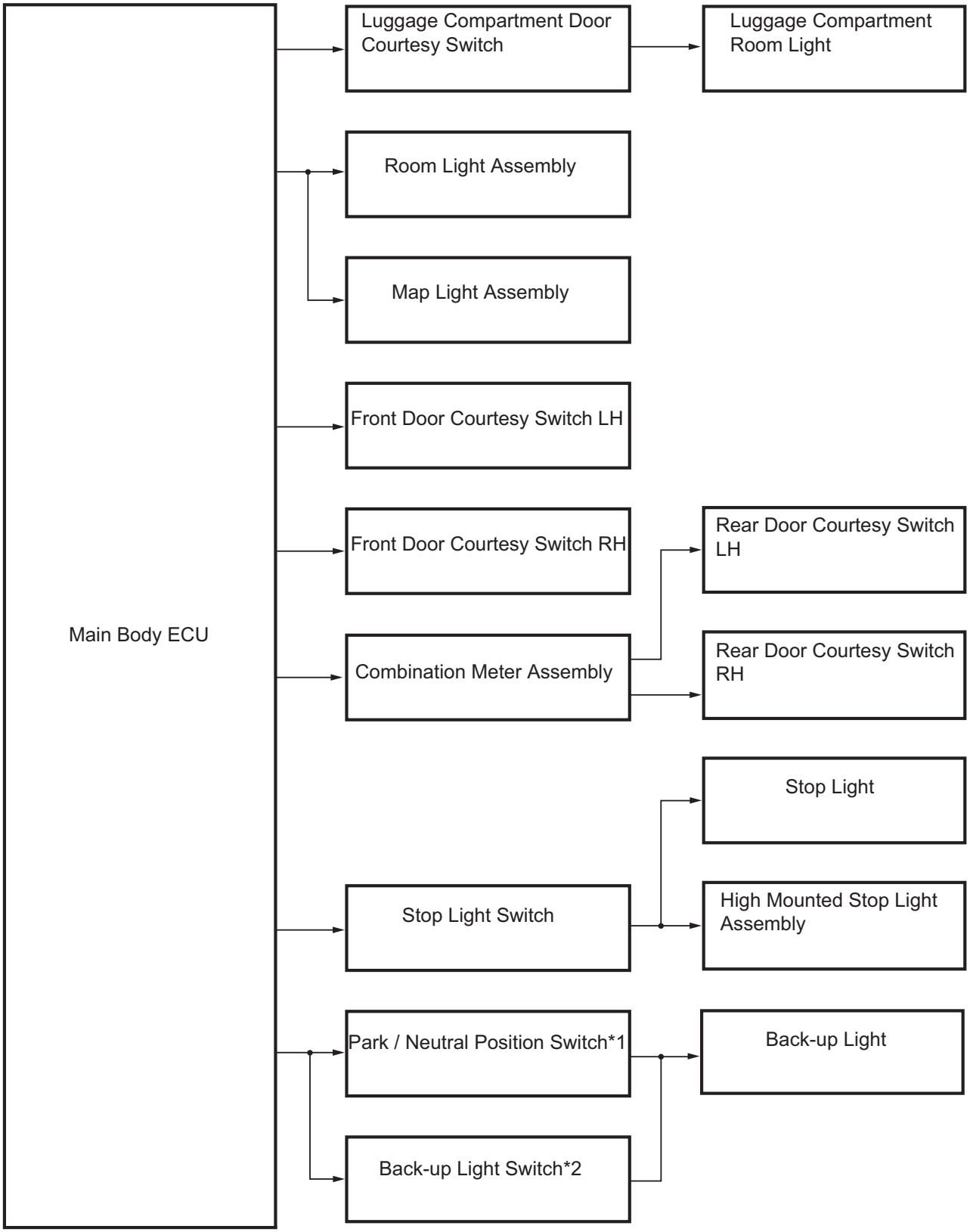

*1: A/T

*2: M/T

B141724E01

w/ Daytime Running Light System:

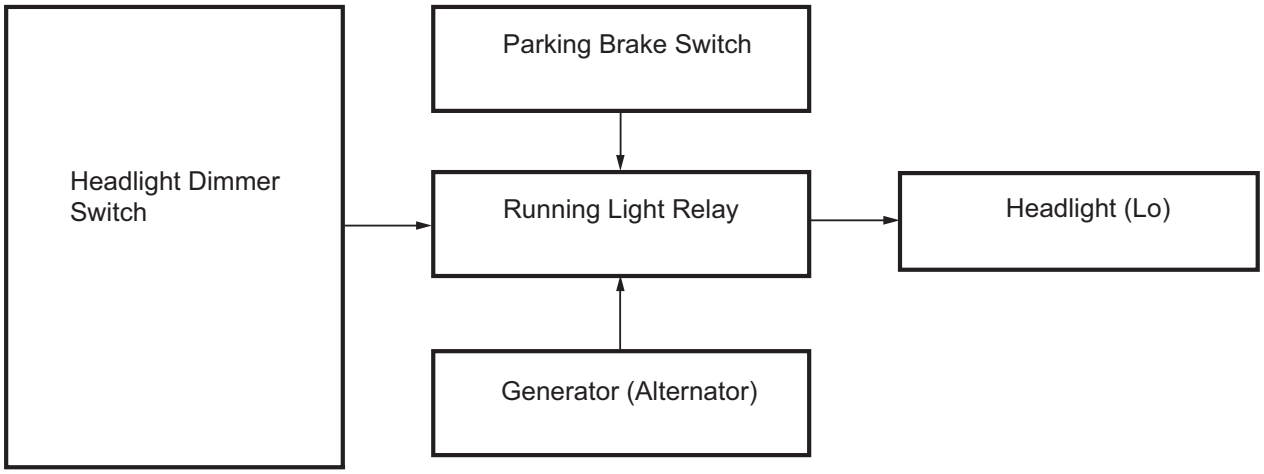

B144235E01

SYSTEM DESCRIPTION

1. LIGHTING SYSTEM

(a) Illumination control system (Illuminated entry system):
When the doors are unlocked through a key or transmitter operation, or when a door is opened or closed, the illuminated entry system turns on the room light assembly.
(1) The main body ECU receives the following signal (A).
- Door courtesy switch signal
- Door detection switch signal
- Ignition switch signal

(2) The main body ECU controls the following signal based on the signals listed in A.
- Illumination operation signal

(3) The main body ECU controls the on/off and fade-in/fade-out operation of the following parts.
- Room light assembly

(b) Battery saver system:
When the ignition switch is turned off and the any of the doors is open continuously for 20 minutes, the main body ECU turns the illumination operation signal off. As a result, the room light assembly, taillights, and the headlights turn off.
(1) The main body ECU receives the following signals (B).
- Door courtesy switch signal
- Ignition switch signal

(2) The main body ECU controls the following signal based on the signals listed in B (C).
- Illumination operation signal

(3) The main body ECU controls the illumination period of the following parts based on the signals listed in C.
- Room light assembly
- Headlight (Low)
- Position light (Front and Rear)

(c) Manual light control system:
This system functions when lights such as the headlights and taillights are illuminated through manual operation of the light control switch.
(1) The main body ECU receives the following signals (D).
- Light control switch signal
- Headlight dimmer switch signal
- Front fog light switch signal

(2) The main body ECU controls the following signals based on the signals listed in D (E).
- H-LP/AMT relay operation signal
- T-LP relay operation signal
- Running light relay assembly operation signal
- Front fog light relay operation signal

(3) The main body ECU controls the on/off operation of the following parts based on the signals listed in E.
- Headlight (Low)
- Headlight (Hi)
- Position light (Front and Rear)
- Front fog light

(d) Light auto turn off system:
When the headlights and taillights are illuminated through the operation of the automatic light control switch, if the ignition switch is turned off and all doors are closed, this system continues illuminating the headlights and taillights for approximately 30 seconds, and then turns off the lights. However, when all the doors locked manually, using the door lock button or using the key or pressing the LOCK on the wireless remote turns the headlights and taillights off immediately.

(1) The main body ECU receives the following signals (F).
- Door courtesy switch signal
- Ignition switch signal

(2) The main body ECU controls the following signals based on the signals listed in F (G).
- H-LP/AMT relay operation signal
- T-LP relay operation signal
- Running light relay assembly operation signal
- Front fog light relay operation signal

(3) The main body ECU controls the illumination period of the following parts based on the signals listed in G.
- Headlight (Low)
- Headlight (Hi)
- Position light (Front and Rear)
- Front fog light

(e) Daytime running light system:
This system is directly connected to the low-beam headlights and is designed to automatically activate the daytime running lights in order to increase the visibility of the vehicle.

(1) The main body ECU receives the following signals (I).
- Ignition switch signal
- Generator signal
- Parking brake switch signal
- Light control switch signal

(2) The main body ECU controls the following signal based on the signals listed in I.
- Running light relay assembly operation signal

(3) The main body ECU controls the on/off operation of the following part.
- Headlight (Low)

HOW TO PROCEED WITH TROUBLESHOOTING

HINT:
- Use these procedures to troubleshoot the lighting system.
- Use an intelligent tester in step 4.

1 VEHICLE BROUGHT TO WORKSHOP

NEXT

2 INSPECT BATTERY VOLTAGE

Standard voltage:
11 to 14 V
If the voltage is below 11 V, recharge or replace the battery before proceeding.

NEXT

3 REFER TO PROBLEM SYMPTOMS TABLE

Result	Proceed to
Fault is not listed in problem symptoms table	A
Fault is listed in problem symptoms table	B

B → **Go to step 5**

A

4 OVERALL ANALYSIS AND TROUBLESHOOTING

(a) Data List/Active Test (See page LI-21)
(b) Terminals of ECU (See page LI-18)

NEXT

5 ADJUST, REPAIR OR REPLACE

NEXT

6 CONFIRMATION TEST

NEXT

END

CUSTOMIZE PARAMETERS

HINT:
The following items can be customized.
NOTICE:
- **When the customer requests modification of items, first make sure that the functions can be customized.**
- **Make a note of the current settings before customization.**
- **When troubleshooting items, first make sure that the functions are set to their default settings.**

ILLUMINATED ENTRY:

Display (Item)	Default	Contents	Setting
LIGHTING TIME (Lighting Time)	15 seconds	Changes illumination duration after door closure. (It will quickly fade out when turning the ignition switch ON.)	7.5/ 15/ 30 (seconds)
I/L ON / ACC OFF (Room light illuminates when ignition switch turned off)	ON	Illuminates light when ignition switch turned from ACC to LOCK. (Room light illuminated when room light switch in DOOR position)	ON/OFF
I/L ON / UNLOCK (Room light illuminates when door key unlocked)	ON	Function to light up the room light, when unlocking with the door key cylinder. (Room light illuminated when room light switch in DOOR position)	ON/OFF

HINT:
Sensitivity adjustments are difficult to confirm. Check by driving the customer's vehicle.

PROBLEM SYMPTOMS TABLE

HINT:
Use the table below to help determine the causes of the problem symptom. The potential causes of the symptoms are listed in order of probability in the "Suspected Area" column of the table. Check each symptom by checking the suspected areas in the order they are listed. Replace parts as necessary.

HEADLIGHT AND TAILLIGHT SYSTEM:

Symptom	Suspected area	See page
Neither headlight comes on. (w/o Daytime running light system)	Harness or connector	LI-28
	Headlight relay circuit	LI-28
Neither headlight comes on. (w/ Daytime running light system)	Harness or connector	LI-33
	DRL Relay circuit	LI-33
	Headlight signal circuit	LI-78
	Headlight relay circuit	LI-28
Only one headlight comes on.	Bulb	LI-28
	Harness or connector	LI-28
	Headlight signal circuit	LI-78
	Headlight relay circuit	LI-28
LO-Beam lights do not come on.	Bulb	LI-28
	Harness or connector	LI-28
	Headlight signal circuit	LI-78
	Headlight relay circuit	LI-28
HI-Beam lights do not come on.	Bulb	LI-28
	Harness or connector	LI-28
	Headlight signal circuit	LI-78
	Headlight relay circuit	LI-28
Flash does not come on. (Headlights and Hi-beam normal)	Harness or connector	LI-28
	Headlight signal circuit	LI-78
	Headlight relay circuit	LI-28
No taillights come on. (Headlights normal)	Harness or connector	LI-53
	Taillight circuit	LI-53
Only one taillight comes on.	Bulb	LI-53
	Harness or connector	LI-53
	Taillight circuit	LI-53

FOG LIGHT SYSTEM:

Symptom	Suspected area	See page
Front fog lights do not come on when light control switch in TAIL or HEAD position. (Headlights normal)	Harness or connector	LI-37
	Front fog light circuit	LI-37
Only one fog light comes on.	Bulb	LI-37
	Harness or connector	LI-37
	Front fog light circuit	LI-37

BACK-UP LIGHT SYSTEM:

Symptom	Suspected area	See page
No back-up lights do not come on.	Harness or connector	LI-68
	Back up light circuit	LI-68
Only one Buck-up light comes on.	Bulb	LI-68
	Harness or connector	LI-68
	Back up light circuit	LI-68

STOP LIGHT SYSTEM:

Symptom	Suspected area	See page
No stop lights come on.	Harness or connector	LI-22
	Stop light switch circuit	LI-22
Only one stop light does not come on.	Bulb	LI-22
	Harness or connector	LI-22
	Stop light switch circuit	LI-22
High mounted stop light does not come on.	Bulb	LI-22
	Harness or connector	LI-22
	Stop light switch circuit	LI-22

TURN SIGNAL LIGHT SYSTEM:

Symptom	Suspected area	See page
No turn signal lights come on.	Harness or connector	LI-41
	Turn signal light circuit	LI-41
Only one turn signal light does not come on.	Bulb	LI-41
	Harness or connector	LI-41
	Turn signal light circuit	LI-41

HAZARD WARNING LIGHT SYSTEM:

Symptom	Suspected area	See page
Hazard warning light does not come on. (Turn signal light normal)	Harness or connector	LI-49
	Hazard warning switch circuit	LI-49

LICENSE PLATE LIGHT SYSTEM:

Symptom	Suspected area	See page
License plate light does not come on.	Bulb	LI-53
	Taillight circuit	LI-53

MAP LIGHT SYSTEM:

Symptom	Suspected area	See page
Map light does not come on.	DOME fuse	-
	Map light assembly	LI-147
	Harness or connector	-

ROOM LIGHT SYSTEM:

Symptom	Suspected area	See page
Room light assembly does not come on.	Harness or connector	LI-82
	Room light assembly	LI-151
	Bulb	-
	Illumination circuit	LI-82

TERMINALS OF ECU

1. CHECK MAIN BODY ECU

Main Body ECU (Rear View):

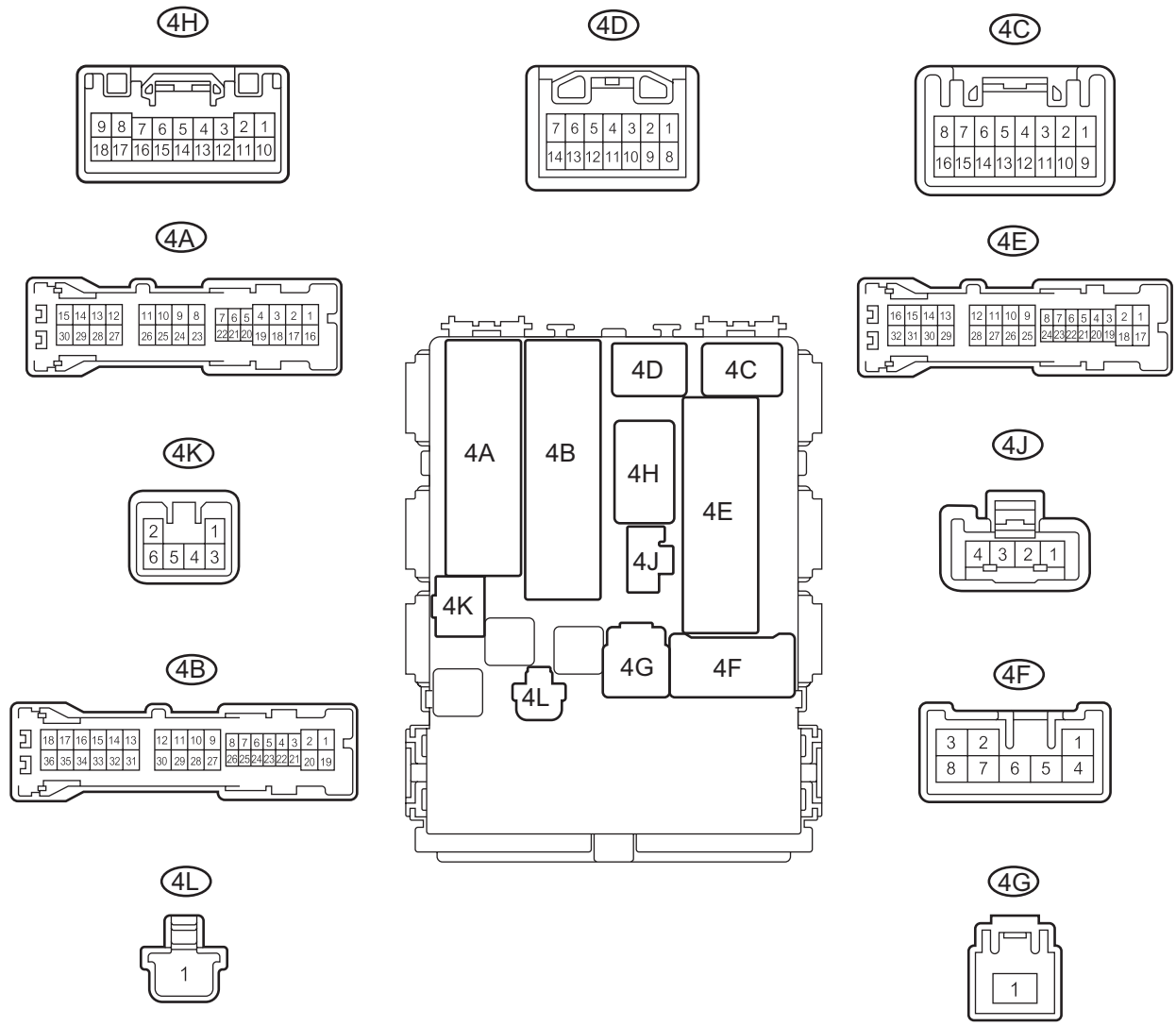

H

E114510E06

Main Body ECU (Front View):

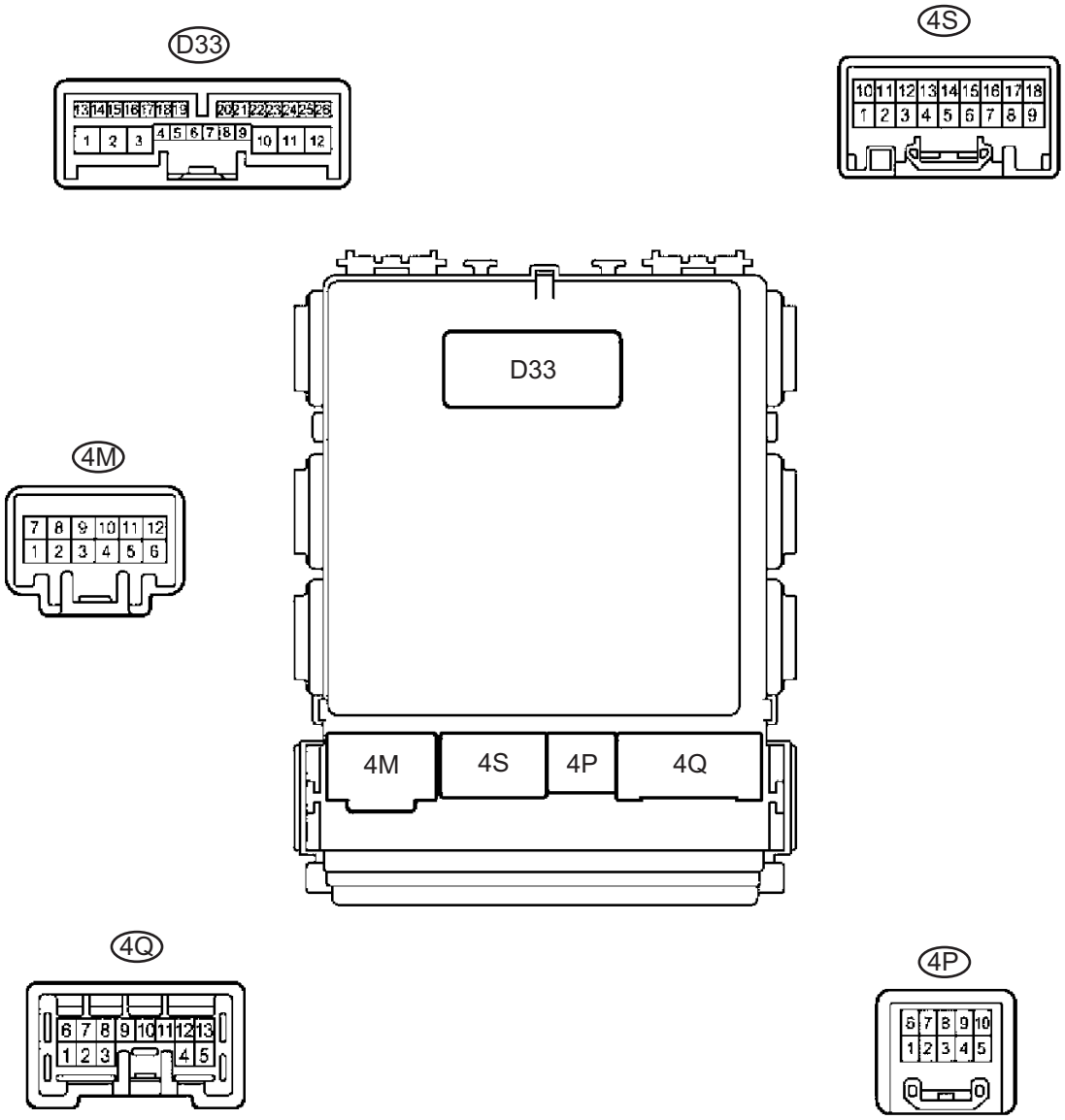

B108641E04

(a) Disconnect the 4B and 4E main body ECU (vehicle rear side) connectors.
(b) Measure the voltages of the wire harness side connectors.

Standard voltage:

Symbols (Terminals No.)	Wiring Color	Terminal Description	Condition	Specified Condition
BECU (4B-30) - GND1 (4E-17)	L - W-B	Battery (Power supply)	Always	11 to 14 V
GND1 (4E-17) - Body ground	W-B - Body ground	Ground	Always	Below 1 V

If the result is not as specified, there may be a malfunction in the wire harness.
(c) Reconnect the main body ECU (vehicle rear side) connectors.

(d) Measure the voltages of the wire harness side connectors.

Standard voltage:

Symbols (Terminals No.)	Wiring Color	Terminal Description	Condition	Specified Condition
DCTY (4A-21) - Body ground	R - Body ground	Driver door courtesy switch input	Driver door closed	11 to 14 V
DCTY (4A-21) - Body ground	R - Body ground	Driver door courtesy switch input	Driver door open	Below 1 V
PCTY (4A-24) - Body ground	L - Body ground	Front passenger door courtesy switch input	Front passenger door closed	11 to 14 V
PCTY (4A-24) - Body ground	L - Body ground	Front passenger side door courtesy switch input	Front passenger door open	Below 1 V
RRCY (4A-20)*3 - Body ground	L - Body ground	Rear RH door courtesy switch input	Rear RH door closed	11 to 14 V
RRCY (4A-20)*3 - Body ground	L - Body ground	Rear RH door courtesy switch input	Rear RH door open	Below 1 V
RRCY (4A-5)*3 - Body ground	G - Body ground	Rear LH door courtesy switch input	Rear LH door closed	11 to 14 V
RRCY (4A-5)*3 - Body ground	G - Body ground	Rear LH door courtesy switch input	Rear LH door open	Below 1 V
RRCY (4A-5)*4 - Body ground	Y - Body ground	Rear LH and RH door courtesy switch input	Rear LH and RH door closed	11 to 14 V
RRCY (4A-5)*4 - Body ground	Y - Body ground	Rear LH and RH door courtesy switch input	Rear LH or RH door open	Below 1 V
BCTY (4A-7)*1 - Body ground	SB - Body ground	Back door courtesy switch input	Back door closed	11 to 14 V
BCTY (4A-7)*1 - Body ground	SB - Body ground	Back door courtesy switch input	Back door open	Below 1 V
LCTY (4A-7)*2 - Body ground	SB - Body ground	Luggage compartment door courtesy switch input	Luggage compartment door closed	11 to 14 V
LCTY (4A-7)*2 - Body ground	SB - Body ground	Luggage compartment door courtesy switch input	Luggage compartment door open	Below 1 V
PKB (4C-2) - Body ground	Y - Body ground	Parking brake switch input	Parking brake switch ON	Below 1 V
PKB (4C-2) - Body ground	Y - Body ground	Parking brake switch input	Parking brake switch OFF	11 to 14 V
ILE (4K-2) - Body ground	P - Body ground	Illumination signal (To room light assembly)	Room light switch in DOOR position and room light assembly comes on	11 to 14 V
ILE (4K-2) - Body ground	P - Body ground	Illumination signal (To room light assembly)	Room light switch in OFF position and room light assembly comes off	Below 1 V

*1: Hatchback
*2: Sedan
*3: Hatchback, Sedan except *5
*4: Sedan *5
*5: Cold area specification, w/ Engine immobilizer system, w/ ABS, w/ Rear window defogger, w/ Power door lock system, w/ Daytime running light, w/ Remote control mirror, w/ Air conditioning
If the result is not as specified, there may be a malfunction in the wire harness.

DATA LIST / ACTIVE TEST

1. READ DATA LIST

HINT:
Using the intelligent tester's DATA LIST allows switch, sensor, actuator and other item values to be read without removing any parts. Reading the DATA LIST early in troubleshooting is one way to save time.

(a) Connect the intelligent tester to the DLC3.
(b) Turn the ignition switch ON.
(c) Read the DATA LIST according to the prompts displayed on the tester.

MAIN BODY ECU:

Item	Measurement Item/Dispay (Range)	Normal Condition	Diagnostic Note
D DOR CTY SW	D Door Courtesy SW/ON or OFF	ON :Driver door open OFF: Driver door closed	-
P DOR CTY SW	P Door Courtesy SW/ON or OFF	ON: Front passenger door open OFF: Front passenger door closed	-
RR DOR CTY SW	RR Door Courtesy SW/ON or OFF	ON: Rear right side door open OFF: Rear right side door closed	-
RL DOR CTY SW	RL Door Courtesy SW/ON or OFF	ON: Rear left side door open OFF: Rear left side door closed	-
BACK DOR CTY SW*1	Back Door Courtesy SW/ON or OFF	ON: Back door open OFF: Back door closed	-
LUGG COURTSY SW*2	Luggage Courtesy SW/ON or OFF	ON: Luggage compartment door open OFF: Luggage compartment door closed	-

*1: Hatchback
*2: Sedan

2. PERFORM ACTIVE TEST

HINT:
Performing the intelligent tester's ACTIVE TEST allows relays, VSV, actuators and other items to be operated without removing any parts. Performing the ACTIVE TEST early in troubleshooting is one way to save time. The DATA LIST can be displayed during the ACTIVE TEST.

(a) Connect the intelligent tester to the DLC3.
(b) Turn the ignition switch ON.
(c) Perform the ACTIVE TEST according to the prompts displayed on the tester.

ACTIVE TEST:

Item	Test Details/ Display (Range)	Diagnostic Note
ILLUMI OUTPUT	Illuminated Entry System ON/OFF	-
HAZARD	Hazard ON/OFF	-
TAIL LIGHT	Taillight Relay ON/OFF	-
HEAD LIGHT	Headlight Relay ON/OFF	-

Stop Light Switch Circuit

DESCRIPTION

When the stop light switch is turned on, the current flows to the stop lights to illuminate.

WIRING DIAGRAM

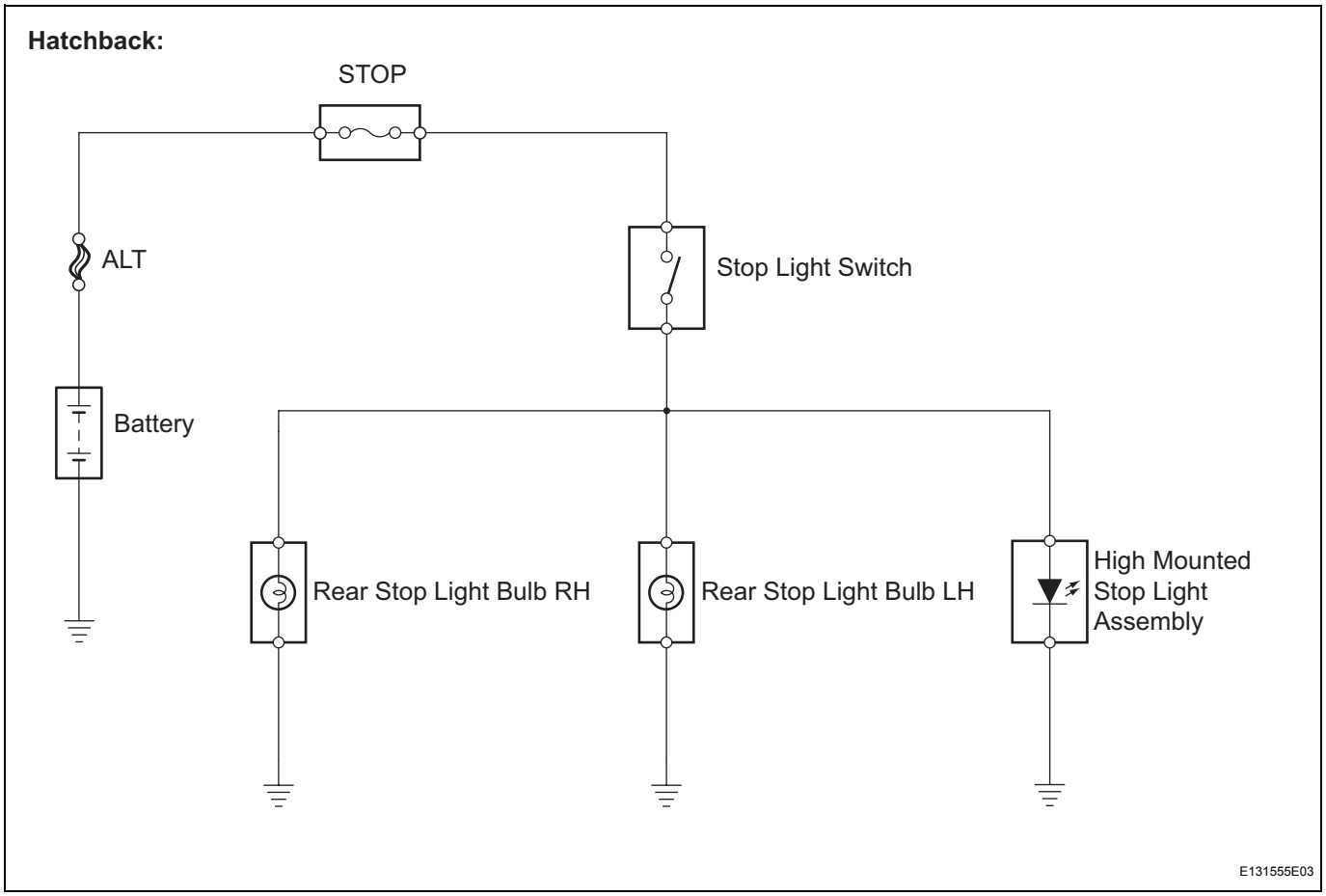

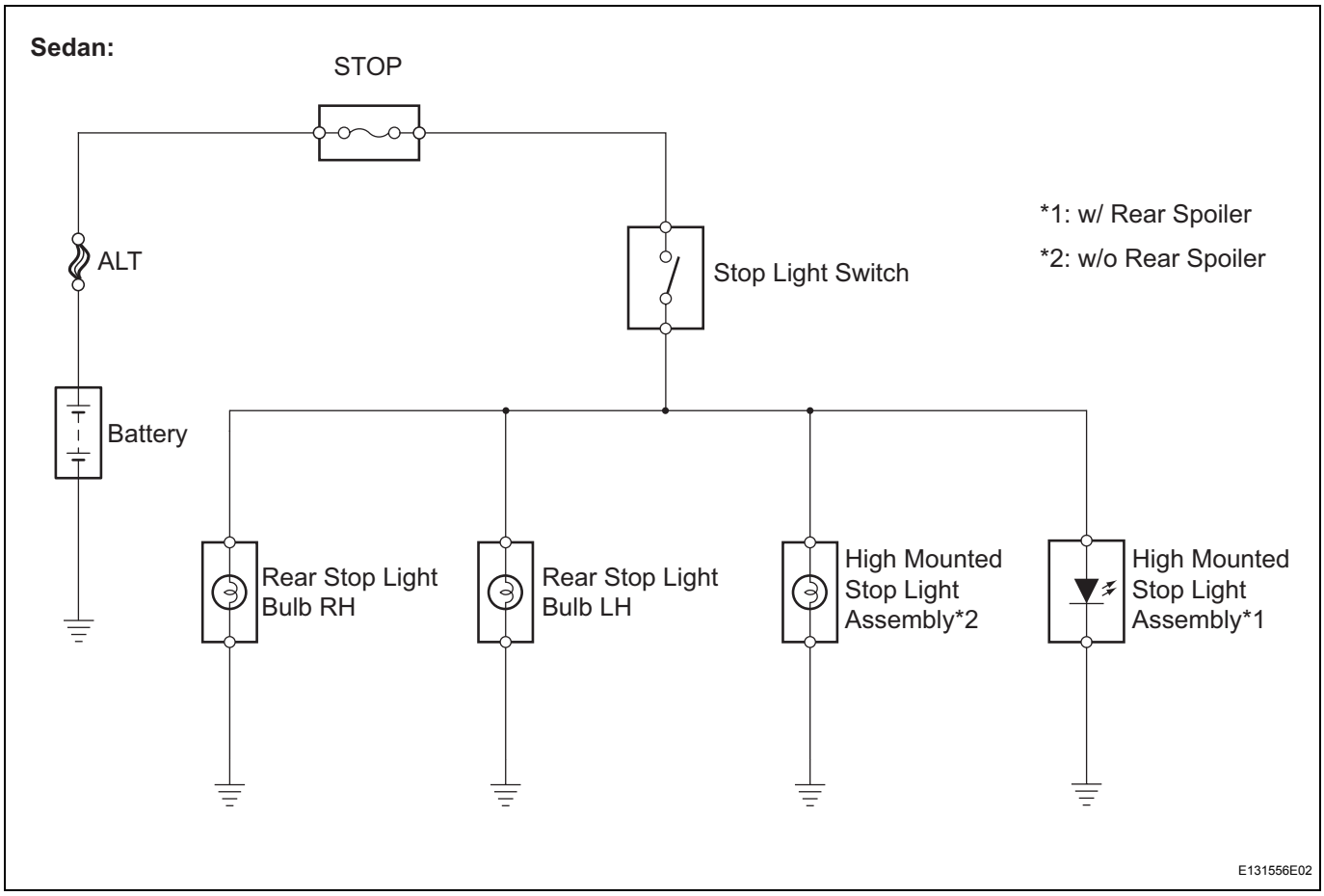

INSPECTION PROCEDURE

1	**INSPECT FUSE (STOP)**

(a) Remove the STOP fuse from the main body ECU.
(b) Measure the resistance.
Standard resistance:
Below 1 Ω
(c) Reinstall the STOP fuse.

NG → **REPLACE FUSE**

OK

2 INSPECT BULB (REAR STOP LIGHT BULB)

Component Side:

High Mounted Stop Light Assembly

Rear Combination Light Assembly*

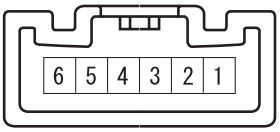

*: LH or RH

B129902E02

(a) Hatchback:
  (1) Remove the high mounted stop light assembly.
  (2) Remove the rear combination light assembly.
  (3) Apply battery voltage to the terminals and check that the rear stop light and high mounted stop light illuminates.
  Standard:
  High Mounted Stop Light

Measurement Condition	Standard
Positive battery - Terminal 1 Negative battery - Terminal 2	High mounted stop light illuminates

Rear Stop Light

Measurement Condition	Standard
Positive battery - Terminal 5 Negative battery - Terminal 6	Rear stop light illuminates

  (4) Reinstall the high mounted stop light assembly.
  (5) Reinstall the rear combination light assembly.

Component Side:

w/ Rear Spoiler:

High Mounted Stop Light Assembly

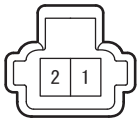

w/o Rear Spoiler:

High Mounted Stop Light Assembly

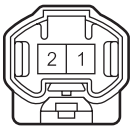

Rear Combination Light Assembly*

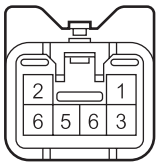

*: LH or RH

B142262E01

(b) Sedan:
  (1) Remove the high mounted stop light assembly.
  (2) Remove the rear combination light assembly.
  (3) Apply battery voltage to the terminals and check that the rear stop light and high mounted stop light illuminates.
  Standard:
  High Mounted Stop Light (w/ Rear Spoiler)

Measurement Condition	Standard
Positive battery - Terminal 2 Negative battery - Terminal 1	High mounted stop light illuminates

High Mounted Stop Light (w/o Rear Spoiler)

Measurement Condition	Standard
Positive battery - Terminal 1 Negative battery - Terminal 2	High mounted stop light illuminates

Rear Stop Light

Measurement Condition	Standard
Positive battery - Terminal 1 Negative battery - Terminal 6	Rear stop light illuminates

  (4) Reinstall the high mounted stop light assembly.
  (5) Reinstall the rear combination light assembly.

NG → **REPLACE BULB**

LI

OK

3 INSPECT STOP LIGHT SWITCH

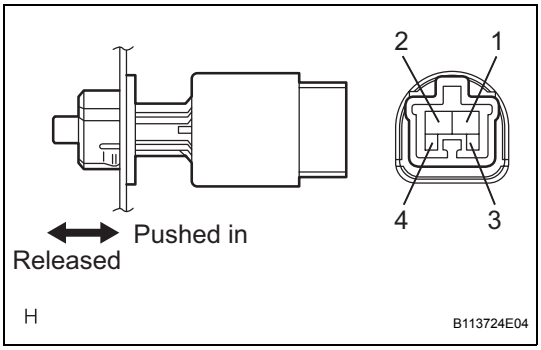

(a) Remove the stop light switch.
(b) Measure the resistance.
Standard resistance

Tester Connection	Condition	Specified Condition
1 - 2	Switch pin released	Below 1 Ω
3 - 4	Switch pin pushed in	10 kΩ or higher
1 - 2	Switch pin pushed in	10 kΩ or higher
3 - 4	Switch pin released	Below 1 Ω

(c) Reinstall the stop light switch.

NG → **REPLACE STOP LIGHT SWITCH**

OK

4 CHECK HARNESS AND CONNECTOR (FUSE - STOP LIGHT SWITCH)

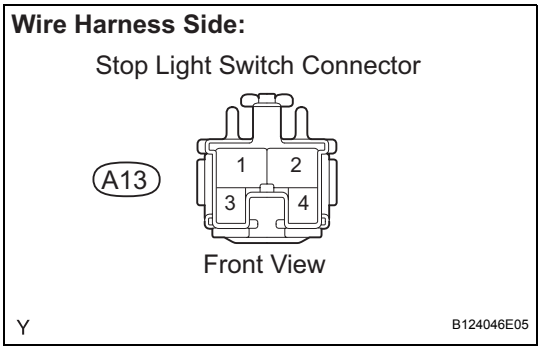

(a) Disconnect the A13 stop light switch connector.
(b) Measure the voltage.
Standard voltage

Tester Connection	Condition	Specified Condition
A13-2 - Body ground	Always	11 to 14 V

(c) Reconnect the stop light switch connector.

NG → **REPAIR OR REPLACE HARNESS OR CONNECTOR**

OK

LI

5	CHECK HARNESS AND CONNECTOR (STOP LIGHT SWITCH - REAR STOP LIGHT)

Wire Harness Side:

Stop Light Switch Connector

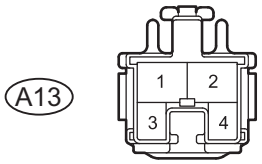

Front View

Rear Combination Light Assembly Connector

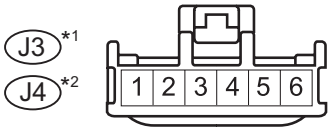

Front View

*1: RH
*2: LH

High Mounted Stop Light Assembly Connector

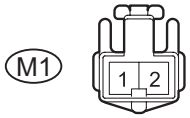

Front View

E120438E04

(a) Hatchback:
  (1) Disconnect the A13 stop light switch connector.
  (2) Disconnect the J3 and J4 rear combination light assembly connectors.
  (3) Disconnect the M1 high mounted stop light assembly connector.
  (4) Measure the resistance.
  Standard resistance

Tester Connection	Specified Condition
A13-1 - J3-5	Below 1 Ω
A13-1 - J4-5	Below 1 Ω
A13-1 - M1-1	Below 1 Ω
A13-1 or J3-5 - Body ground	10 kΩ or higher
A13-1 or J4-5 - Body ground	10 kΩ or higher
A13-1 or M1-1 - Body ground	10 kΩ or higher

  (5) Reconnect the stop light switch connector.
  (6) Reconnect the rear combination light assembly connectors.
  (7) Reconnect the high mounted stop light assembly connector.

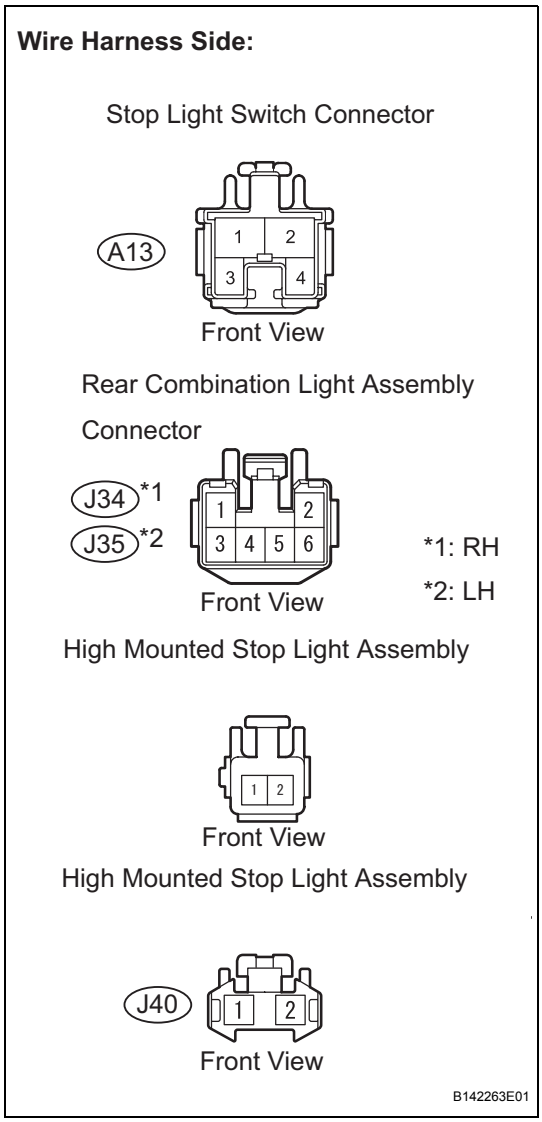

(b) Sedan:
(1) Disconnect the A13 stop light switch connector.
(2) Disconnect the J34 and J35 rear combination light assembly connectors.
(3) Remove the high mounted stop light assembly. (With rear spoiler)
(4) Disconnect the J40 high mounted stop light assembly connector. (Without rear spoiler)
(5) Measure the resistance.
Standard resistance

Tester Connection	Specified Condition
A13-1 - J34-1	Below 1 Ω
A13-1 - J35-1	Below 1 Ω
A13-1 - High mounted stop light connector-2*1	Below 1 Ω
A13-1 - J40-1*2	Below 1 Ω
A13-1 or J34-1 - Body ground	10 kΩ or higher
A13-1 or J35-1 - Body ground	10 kΩ or higher
A13-1 or High mounted stop light connector-2*1 - Body ground	10 kΩ or higher
A13-1 or J40-1*2 - Body ground	10 kΩ or higher

*1: w/ Rear spoiler
*2: w/o Rear spoiler

(6) Reconnect the stop light switch connector.
(7) Reconnect the rear combination light assembly connectors.
(8) Reinstall the high mounted stop light assembly connector. (With rear spoiler)
(9) Reconnect the high mounted stop light assembly connector. (Without rear spoiler)

NG → **REPAIR OR REPLACE HARNESS OR CONNECTOR**

OK

REPAIR OR REPLACE HARNESS OR CONNECTOR (REAR STOP LIGHT - BODY GROUND)

Headlight Relay Circuit

DESCRIPTION

When the light control switch, located on the headlight dimmer switch, is turned to the HEAD position, the H-LP/AMT relay illuminates the headlights.

WIRING DIAGRAM

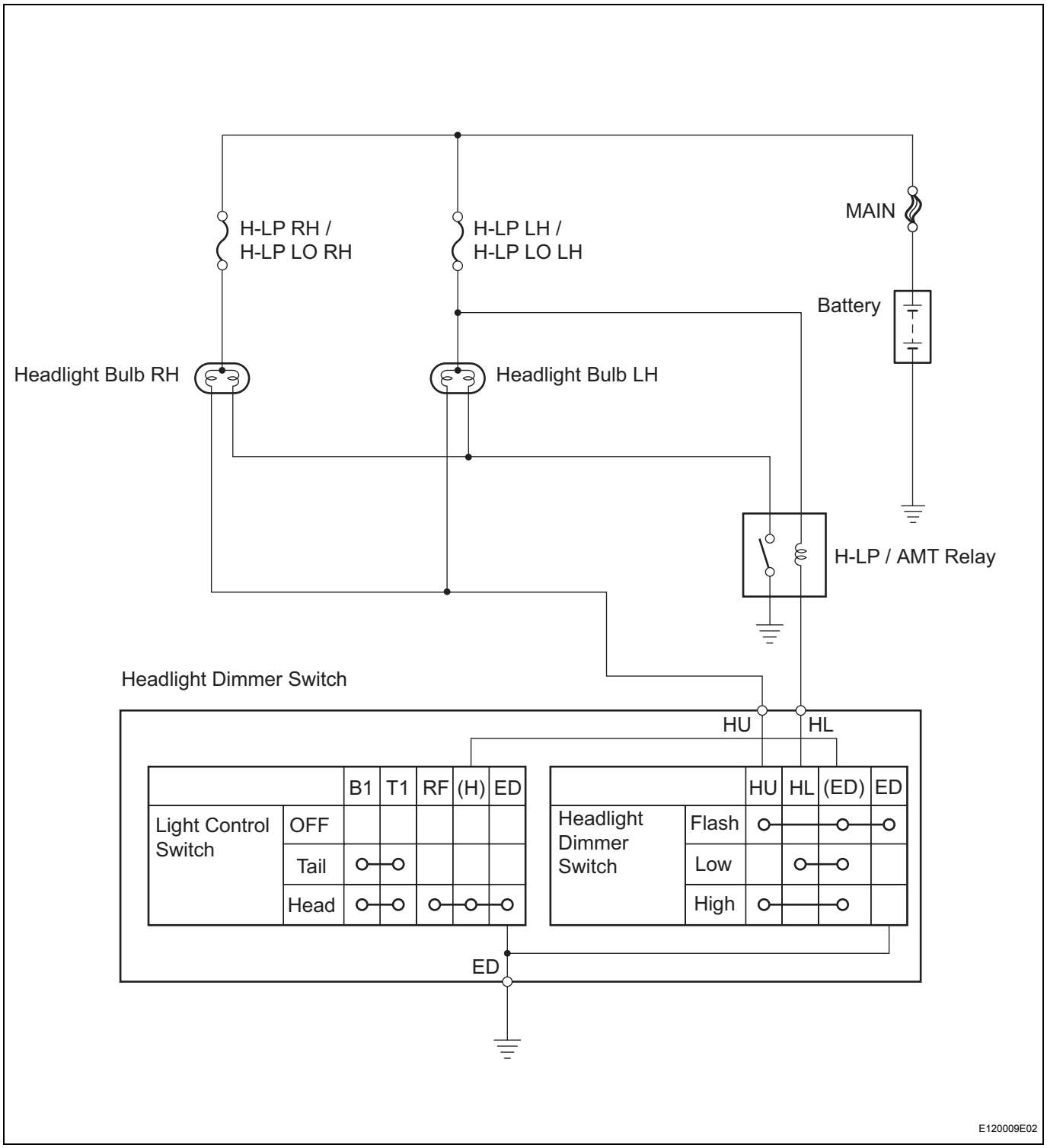

INSPECTION PROCEDURE

1	PERFORM ACTIVE TEST BY INTELLIGENT TESTER (HEAD LIGHT)

(a) Connect the intelligent tester to the DLC3.
(b) Turn the ignition switch ON and turn the tester ON.
(c) Select the item below in the ACTIVE TEST and then check the relay operation.

Main Body ECU

Item	Test Details: Display (Range)	Diagnostic Note
HEAD LIGHT	Headlight Relay ON/OFF	-

OK:
Headlights come on

OK → **Go to step 7**

NG

2	INSPECT FUSE (H-LP RH/H-LP LO RH, H-LP LH/H-LP LO LH)

(a) Remove the H-LP RH/H-LP LO RH and H-LP LH/H-LP LO LH fuses from the engine room relay block.
(b) Measure the resistance.
Standard resistance:
Below 1 Ω
(c) Reinstall the H-LP RH/H-LP LO RH and H-LP LH/H-LP LO LH fuses

NG → **REPLACE FUSE**

OK

3	INSPECT BULB (HEADLIGHT BULB)

Component Side:

Headlight Bulb*

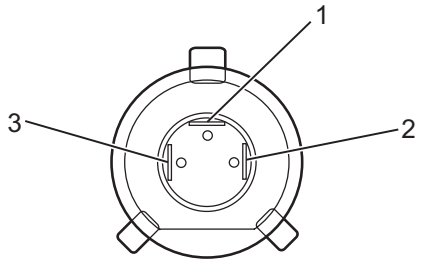

*: LH or RH

B129953E01

(a) Disconnect the B4 and B6 headlight connectors.
(b) Apply battery voltage to the terminals and check that the headlight illuminates.
Standard

Measurement Condition	Standard
Positive battery - Terminal 1 Negative battery - Terminal 3	Headlight illuminates (HI-Beam)
Positive battery - Terminal 2 Negative battery - Terminal 3	Headlight illuminates (LO-Beam)

(c) Reconnect the headlight connectors.

NG → **REPLACE BULB**

OK

4 INSPECT H-LP/AMT RELAY

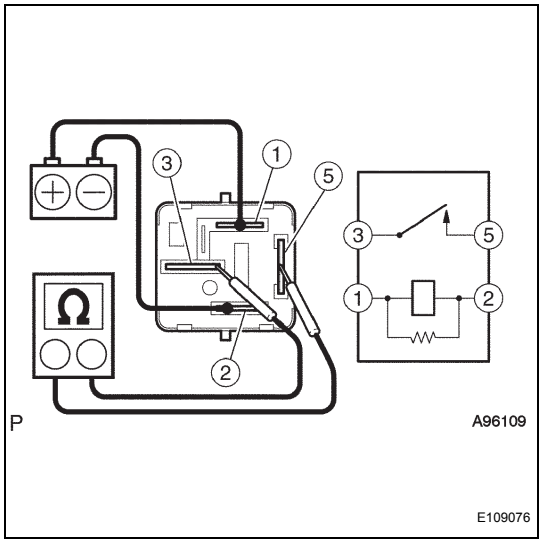

(a) Remove the H-LP/AMT relay from the engine room relay block No. 2.
(b) Measure the resistance.
Standard resistance

Tester Connection	Specified Condition
3 - 5	10 kΩ or higher
3 - 5	Below 1 Ω (When battery voltage applied to terminals 1 and 2)

(c) Reinstall the H-LP/AMT relay.

NG → **REPLACE H-LP/AMT RELAY**

OK

5 CHECK HARNESS AND CONNECTOR (FUSE - HEADLIGHT BULB)

Wire Harness Side:

Headlight Bulb Connector

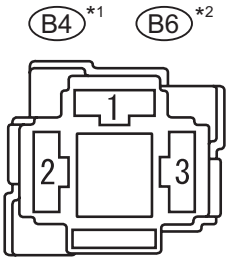

*1: RH
*2: LH

B125793E04

(a) Disconnect the B4 and B6 headlight bulb connectors.
(b) Measure the voltage.
Standard voltage

Tester Connection	Condition	Specified Condition
B4-3 - Body ground	Always	11 to 14 V
B6-3 - Body ground	Always	11 to 14 V

(c) Reconnect the headlight bulb connectors.

NG → **REPAIR OR REPLACE HARNESS OR CONNECTOR**

OK

6 CHECK HARNESS AND CONNECTOR (HEADLIGHT - H-LP/AMT RELAY)

Component Side:

Engine Room Relay Block No, 2

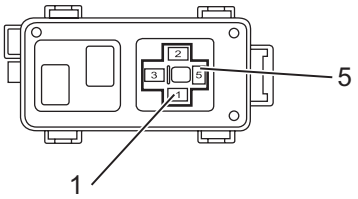

B125794E01

(a) Remove the H-LP/AMT relay from the engine room relay block No. 2.
(b) Measure the voltage.
Standard voltage

Tester Connection	Condition	Specified Condition
1 - Body ground	Always	11 to 14 V
5 - Body ground	Always	11 to 14 V

(c) Reinstall the H-LP/AMT relay.

NG → **REPAIR OR REPLACE HARNESS OR CONNECTOR**

OK

REPAIR OR REPLACE HARNESS OR CONNECTOR (HEADLIGHT - HEADLIGHT DIMMER SWITCH)

7 INSPECT HEADLIGHT DIMMER SWITCH

Component Side:

Headlight Dimmer Switch

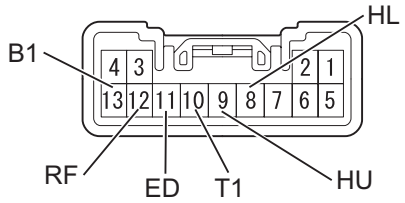

E123010E02

(a) Remove the headlight dimmer switch.
(b) Inspect the light control switch.
(c) Measure the resistance.
Standard resistance

Tester Connection	Condition	Specified Condition
10 (T1) - 13 (B1)	TAIL	Below 1 Ω
10 (T1) - 13 (B1)	OFF	10 kΩ or higher
10 (T1) - 13 (B1)	HEAD	Below 1 Ω
10 (T1) - 13 (B1)	OFF	10 kΩ or higher
11 (ED) - 12 (RF)	HEAD	Below 1 Ω
11 (ED) - 12 (RF)	OFF	10 kΩ or higher

(d) Inspect the headlight dimmer switch.
(e) Measure the resistance.
Standard resistance

Tester Connection	Condition	Specified Condition
9 (HU) - 11 (ED)	FLASH	Below 1 Ω
8 (HL) - 11 (ED)	LOW BEAM	Below 1 Ω
9 (HU) - 11 (ED)	HI BEAM	Below 1 Ω

(f) Reinstall the headlight dimmer switch.

NG → **REPLACE HEADLIGHT DIMMER SWITCH**

OK

8	**CHECK HARNESS AND CONNECTOR (H-LP/AMT RELAY - HEADLIGHT DIMMER SWITCH)**

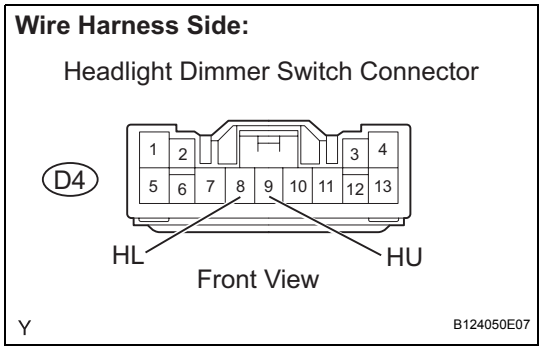

(a) Disconnect the D4 headlight dimmer switch connector.
(b) Measure the voltage.
Standard voltage

Tester Connection	Condition	Specified Condition
D4-8 (HL) - Body ground	Always	11 to 14 V
D4-9 (HU) - Body ground	Always	11 to 14 V

(c) Reconnect the headlight dimmer switch connector.

NG → **REPAIR OR REPLACE HARNESS OR CONNECTOR**

OK

REPAIR OR REPLACE HARNESS OR CONNECTOR (HEADLIGHT DIMMER SWITCH - BODY GROUND)

DRL Relay Circuit

DESCRIPTION

When the engine is started, signals are transmitted from the generator to the running light relay assembly, causing the headlights to illuminate.

WIRING DIAGRAM

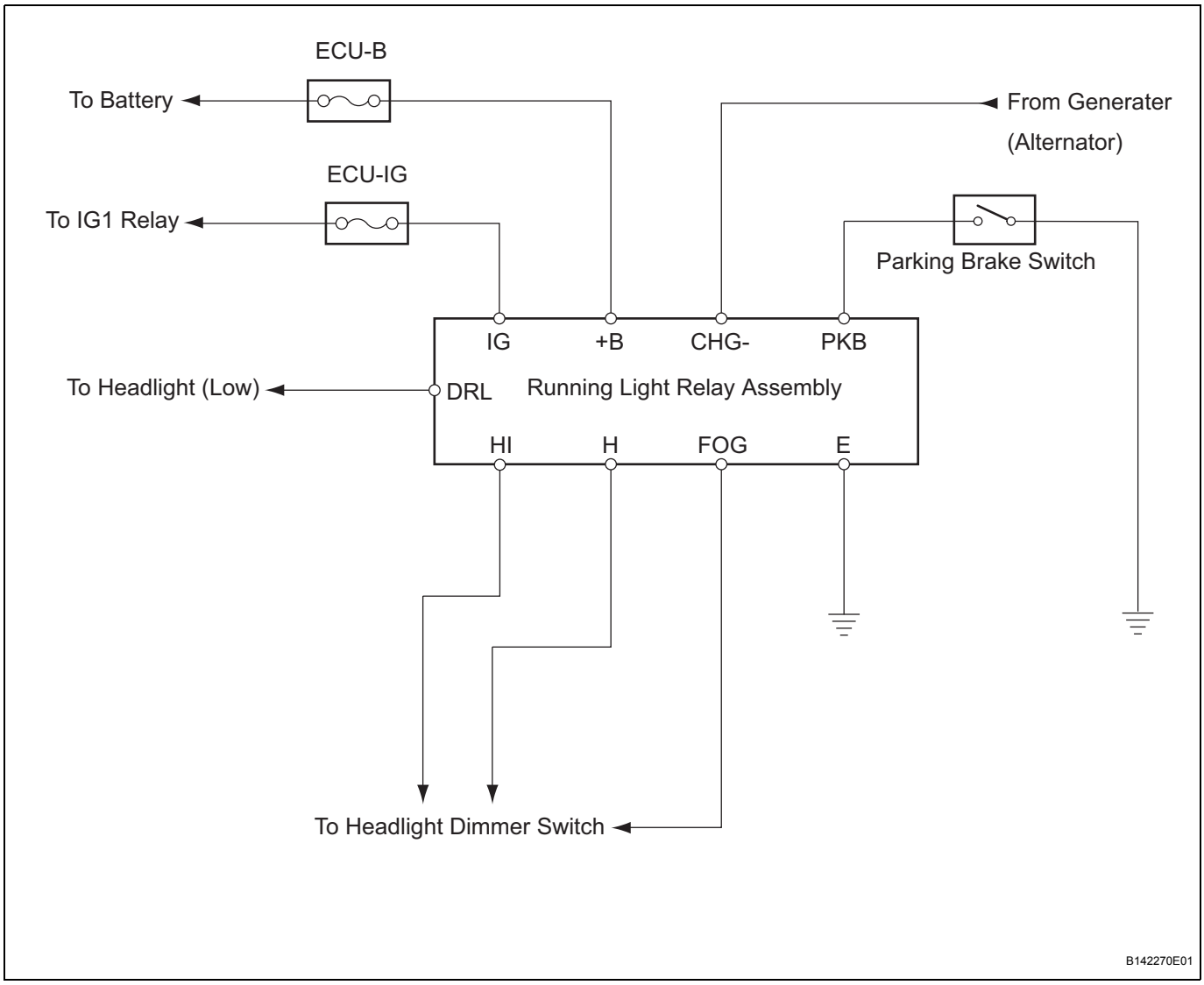

INSPECTION PROCEDURE

1	INSPECT FUSE (ECU-B, ECU-IG)

(a) Remove the ECU-B fuse from the engine room relay block.
(b) Remove the ECU-IG fuse from the main body ECU.
(c) Measure the resistance.
Standard resistance:
Below 1 Ω
(d) Reinstall the ECU-B and ECU-IG fuses.

NG → **REPLACE FUSE**

OK

2 CHECK HARNESS AND CONNECTOR (FUSE - RUNNING LIGHT RELAY ASSEMBLY)

Wire Harness Side:

Running Light Relay Assembly Connector

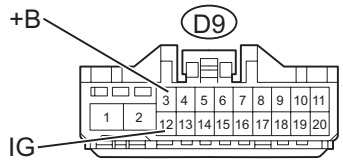

Front View

B142269E01

(a) Disconnect the D9 running light relay assembly connector.

(b) Measure the voltage.

Standard voltage

Tester Connection	Condition	Specified Condition
D9-3 (+B) - Body ground	Always	11 to 14 V
D9-12 (IG) - Body ground	Ignition switch ON	11 to 14 V

(c) Reconnect the running light relay assembly connector.

NG → **REPAIR OR REPLACE HARNESS OR CONNECTOR**

OK

3 CHECK HARNESS AND CONNECTOR (RUNNING LIGHT RELAY ASSEMBLY - HEAD LIGHT)

Wire Harness Side:

Running Light Relay Assembly Connector

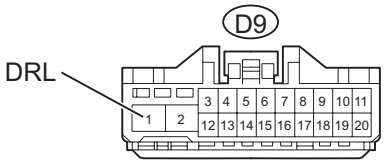

Front View

B142269E02

(a) Disconnect the D9 running light relay assembly connector.

(b) Measure the voltage.

Standard voltage

Tester Connection	Condition	Specified Condition
D9-1 (DRL) - Body ground	Always	11 to 14 V

(c) Reconnect the running light relay assembly connector.

NG → **REPAIR OR REPLACE HARNESS OR CONNECTOR**

OK

4 CHECK HARNESS AND CONNECTOR (RUNNING LIGHT RELAY ASSEMBLY - HEAD LIGHT DIMMER SWITCH)

Wire Harness Side:

Running Light Relay Assembly Connector

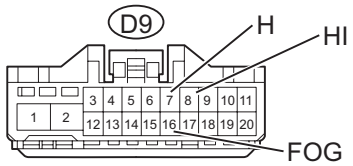

Front View

B142269E03

(a) Disconnect the D9 running light relay assembly connector.

(b) Measure the voltage.

Standard voltage

Tester Connection	Condition	Specified Condition
D9-7 (H) - Body ground	Always	11 to 14 V
D9-16 (FOG) - Body ground	Fog light switch ON	11 to 14 V
D9-8 (HI) - Body ground	Light control switch OFF	11 to 14 V

(c) Reconnect the running light relay assembly connector.

NG → **REPAIR OR REPLACE HARNESS OR CONNECTOR**

OK

5 CHECK HARNESS AND CONNECTOR (GENERATER - RUNNING LIGHT RELAY ASSEMBLY)

Wire Harness Side:

Running Light Relay Assembly Connector

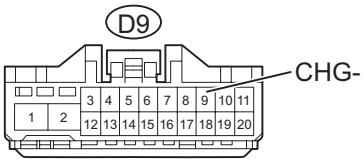

Front View

B142269E04

(a) Disconnect the D9 running light relay assembly connector.
(b) Measure the voltage.
Standard voltage

Tester Connection	Condition	Specified Condition
D9-9 (CHG-) - Body ground	Confirm that vehicle is stopped and engine is idling	11 to 14 V

(c) Reconnect the running light relay assembly connector.

NG → **REPAIR OR REPLACE HARNESS OR CONNECTOR**

OK

6 CHECK HARNESS AND CONNECTOR (RUNNING LIGHT RELAY ASSEMBLY - PARKING BRAKE SWITCH)

Wire Harness Side:

Parking Brake Switch Connector

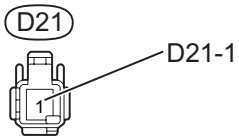

Front View

Running Light Relay Assembly Connector

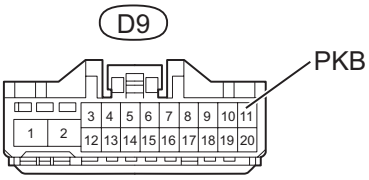

Front View

B126046E01

(a) Disconnect the D9 running light relay assembly connector.
(b) Disconnect the D21 parking brake switch connector.
(c) Measure the resistance.
Standard resistance

Tester Connection	Specified Condition
D9-11 (PKB) - D21-1	Below 1 Ω

(d) Reconnect the parking brake switch connector.
(e) Reconnect the running light relay assembly connector.

NG → **REPAIR OR REPLACE HARNESS OR CONNECTOR**

OK

7	**CHECK HARNESS AND CONNECTOR (RUNNING LIGHT RELAY - BODY GROUND)**

Wire Harness Side:

Running Light Relay Assembly Connector

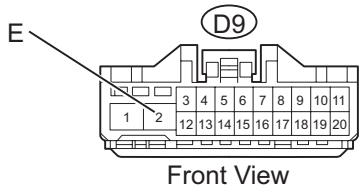

(a) Disconnect the D9 running light relay assembly connector.

(b) Measure the resistance.

Standard resistance

Tester Connection	Specified Condition
D9-2 (E) - Body ground	Below 1 Ω

(c) Reconnect the running light relay assembly connector.

NG → **REPAIR OR REPLACE HARNESS OR CONNECTOR**

OK

REPLACE RUNNING LIGHT RELAY ASSEMBLY

Front Fog Light Circuit

DESCRIPTION

When the front fog light switch is turned on, the front fog light relay illuminates the front fog lights.

WIRING DIAGRAM

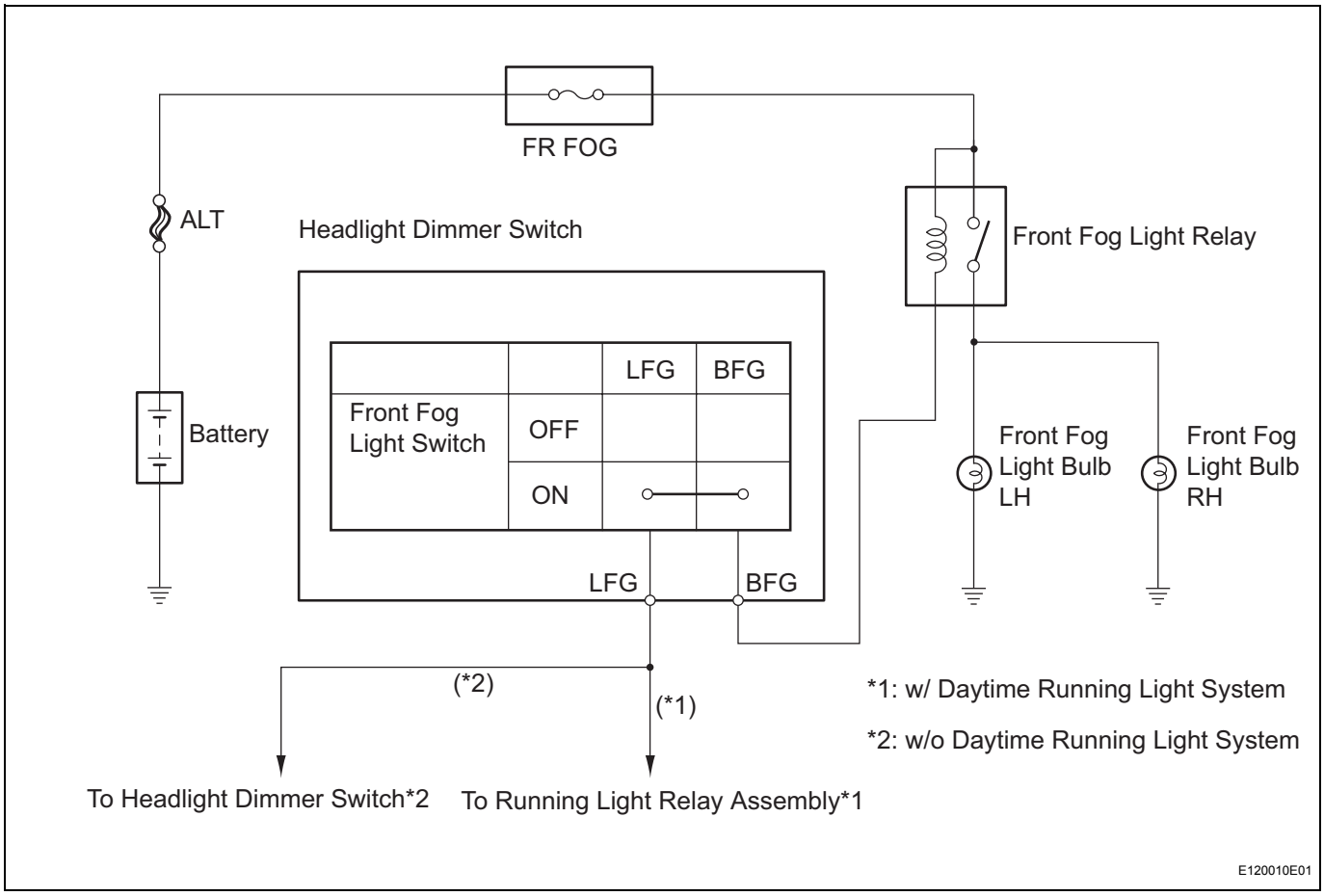

INSPECTION PROCEDURE

1	CHECK WHETHER FRONT FOG LIGHTS ILLUMINATE

(a) Check whether the front fog lights illuminate.
Result

Condition	Proceed to
Neither left nor right fog light illuminates	A
Either left or right fog light illuminates	B

B → Go to step 7

A

2	INSPECT FUSE (FR FOG)

(a) Remove the FR FOG fuse from the main body ECU.
(b) Measure the resistance.
Standard resistance:
Below 1 Ω
(c) Reinstall the FR FOG fuse.

NG → **REPLACE FUSE**

OK

3	INSPECT FRONT FOG LIGHT RELAY

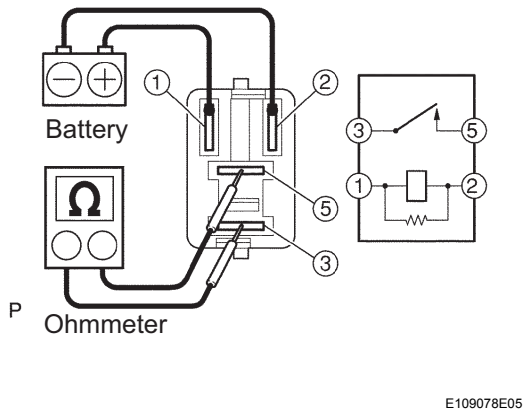

(a) Remove the front fog light relay.
(b) Measure the resistance.
Standard resistance

Tester Connection	Specified Condition
3 - 5	10 kΩ or higher
3 - 5	Below 1 Ω (When battery voltage applied to terminals 1 and 2)

(c) Reinstall the front fog light relay.

NG → **REPLACE FRONT FOG LIGHT RELAY**

OK

4	CHECK HARNESS AND CONNECTOR (FUSE - FRONT FOG LIGHT RELAY)

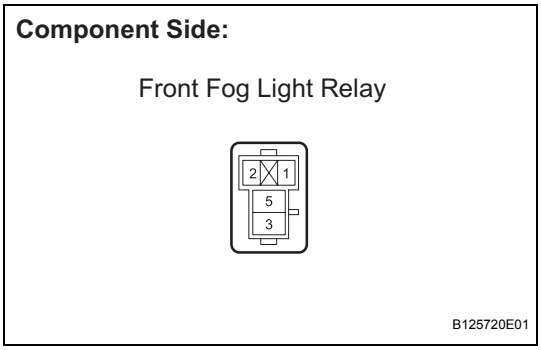

(a) Remove the front fog light relay.
(b) Measure the voltage.
Standard voltage

Tester Connection	Condition	Specified Condition
2 - Body ground	Always	11 to 14 V
5 - Body ground	Always	11 to 14 V

(c) Reinstall the front fog light relay.

NG → **REPAIR OR REPLACE HARNESS OR CONNECTOR**

OK

LI

5 INSPECT HEADLIGHT DIMMER SWITCH

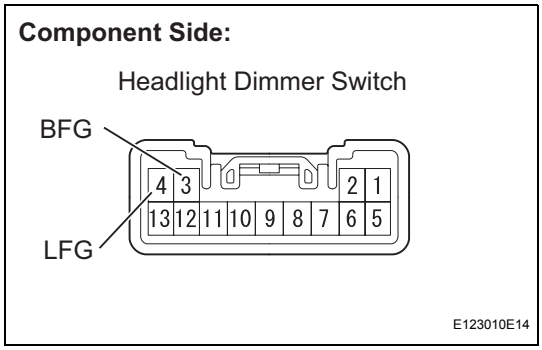

(a) Remove the headlight dimmer switch.
(b) Inspect the front fog light switch.
(c) Measure the resistance.
Standard resistance

Tester Connection	Condition	Specified Condition
3 (BFG) - 4 (LFG)	Front fog light switch OFF	10 kΩ or higher
3 (BFG) - 4 (LFG)	Front fog light switch ON	Below 1 Ω

(d) Reinstall the headlight dimmer switch.

NG → **REPLACE HEADLIGHT DIMMER SWITCH**

LI

OK

6 CHECK HARNESS AND CONNECTOR (FRONT FOG LIGHT RELAY - HEADLIGHT DIMMER SWITCH)

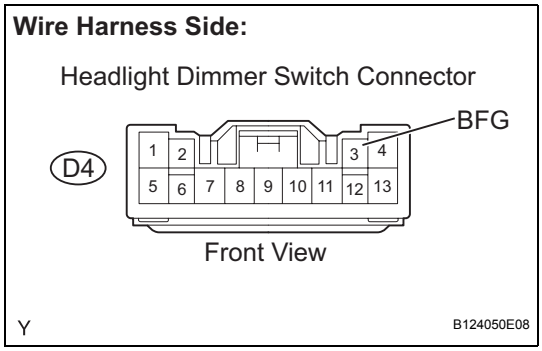

(a) Disconnect the D4 headlight dimmer switch connector.
(b) Measure the voltage.
Standard voltage

Tester Connection	Condition	Specified Condition
D4-3 (BFG) - Body ground	Always	11 to 14 V

(c) Reconnect the headlight dimmer switch connector.

NG → **REPAIR OR REPLACE HARNESS OR CONNECTOR**

OK

REPAIR OR REPLACE HARNESS OR CONNECTOR (HEADLIGHT DIMMER SWITCH - BODY GROUND)

7 INSPECT BULB (FRONT FOG LIGHT BULB)

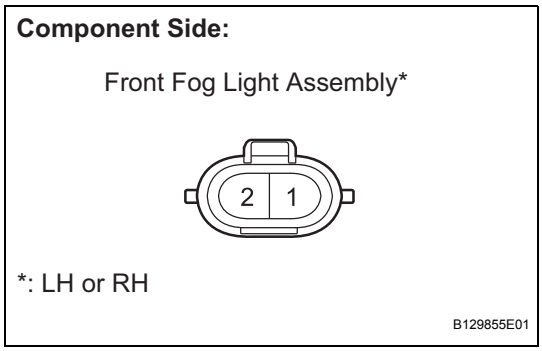

(a) Remove the front fog light assembly.
(b) Apply battery voltage to the terminals and check that the front fog light illuminates.
Standard

Measurement Condition	Standard
Positive battery - Terminal 2 Negative battery - Terminal 1	Front fog light illuminates

(c) Reinstall the front fog light assembly.

NG → **REPLACE BULB**

OK

8	**CHECK HARNESS AND CONNECTOR (FRONT FOG LIGHT RELAY - FRONT FOG LIGHT ASSEMBLY)**

Wire Harness Side:

Front Fog Light Assembly Connector

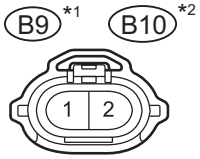

Front View

*1: RH

*2: LH

B125795E04

(a) Disconnect the B9 and B10 front fog light assembly connectors.

(b) Measure the voltage.

Standard voltage

Tester Connection	Condition	Specified Condition
B9-2 - Body ground	Front fog light switch ON	11 to 14 V
B10-2 - Body ground	Front fog light switch ON	11 to 14 V

(c) Reconnect the front fog light assembly connectors.

NG → **REPAIR OR REPLACE HARNESS OR CONNECTOR**

OK

REPAIR OR REPLACE HARNESS OR CONNECTOR (FRONT FOG LIGHT ASSEMBLY - BODY GROUND)

Turn Signal Light Circuit

DESCRIPTION

The turn signal flasher relay in the main body ECU turns on when it receives signals from the headlight dimmer switch integrated with the turn signal switch, causing the turn signal lights to flash.

WIRING DIAGRAM

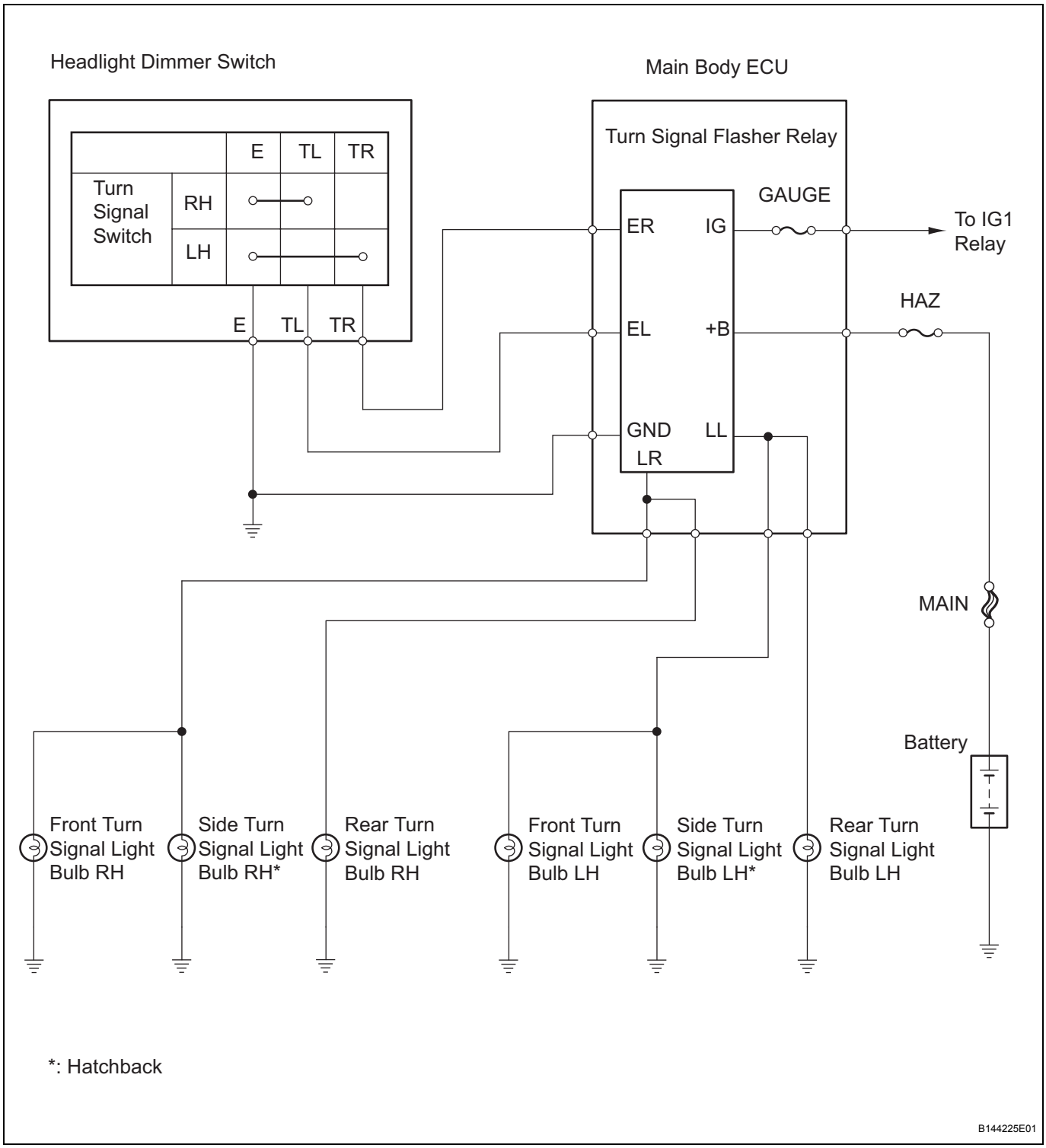

INSPECTION PROCEDURE

1 CHECK OPERATION OF TURN SIGNAL LIGHT

(a) When the turn signal light switch is operated, check that the appropriate turn signal light flashes.

Result

Condition	Proceed To
No lights flash	A
Front turn signal light (LH or RH) does not flash	B
Side turn signal light (LH or RH) does not flash (Hatchback)	C
Rear turn signal light (LH or RH) does not flash	D

B → **Go to step 6**

C → **Go to step 8**

D → **Go to step 10**

A

2 INSPECT FUSE (GAUGE, HAZ)

(a) Remove the GAUGE fuse from the main body ECU.
(b) Remove the HAZ fuse from the engine room relay block.
(c) Measure the resistance.
Standard resistance:
Below 1 Ω
(d) Reinstall the GAUGE and HAZ fuses.

NG → **REPLACE FUSE**

OK

3 CHECK HARNESS AND CONNECTOR (FUSE - MAIN BODY ECU)

Wire Harness Side:

Main Body ECU Connector

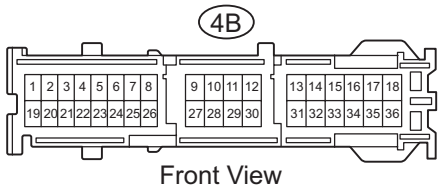

B135312E01

(a) Disconnect the 4B main body ECU connector.
(b) Measure the voltage.
Standard voltage

Tester Connection	Condition	Specified Condition
4B-32 - Body ground	Always	11 to 14 V

(c) Reconnect the main body ECU connector.

NG → **REPAIR OR REPLACE HARNESS OR CONNECTOR**

OK

4 INSPECT HEADLIGHT DIMMER SWITCH

Component Side:

Headlight Dimmer Switch

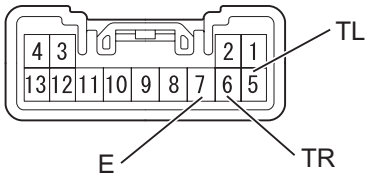

E123010E04

(a) Remove the headlight dimmer switch.
(b) Inspect the turn signal switch.
(c) Measure the resistance.
Standard resistance

Tester Connection	Condition	Specified Condition
6 (TR) - 7 (E)	Right	Below 1 Ω
6 (TR) - 7 (E)	Neutral	10 kΩ or higher
5 (TL) - 7 (E)	Left	Below 1 Ω
5 (TL) - 7 (E)	Neutral	10 kΩ or higher

(d) Reinstall the headlight dimmer switch.

NG → **REPLACE HEADLIGHT DIMMER SWITCH**

OK

5 CHECK HARNESS AND CONNECTOR (HEADLIGHT DIMMER SWITCH - MAIN BODY ECU)

Wire Harness Side:

Headlight Dimmer Switch Connector

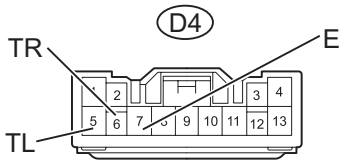

Front View

Main Body ECU Connector

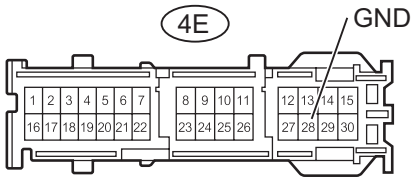

Front View

Main Body ECU Connector

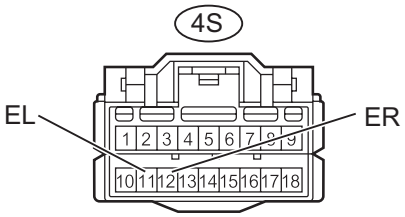

Front View

B135313E01

(a) Disconnect the D4 headlight dimmer switch connector.
(b) Disconnect the 4S and 4E and main body ECU connectors.
(c) Measure the resistance.
Standard resistance

Tester Connection	Specified Condition
D4-5 (TL) - 4S-11 (EL)	Below 1 Ω
D4-6 (TR) - 4S-12 (ER)	Below 1 Ω
D4-7 (E) - 4E-28 (GND)	Below 1 Ω
D4-5 (TL) or 4S-11 (EL) - Body ground	10 kΩ or higher
D4-6 (TR) or 4S-12 (ER) - Body ground	10 kΩ or higher
D4-7 (E) or 4E-28 (GND) - Body ground	10 kΩ or higher

(d) Reconnect the headlight dimmer switch connector.
(e) Reconnect the main body ECU connectors.

NG → **REPAIR OR REPLACE HARNESS OR CONNECTOR**

OK

REPLACE MAIN BODY ECU

6 INSPECT BULB (FRONT TURN SIGNAL LIGHT BULB)

Component Side:

Front Turn Signal Light*

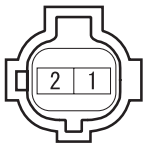

*: LH or RH

B129905E02

(a) Hatchback:
  (1) Remove the front turn signal light.
  (2) Apply battery voltage to the terminals and check that the front turn signal light illuminates.
  (3) Reinstall the front turn signal light.
  Standard

Measurement Condition	Standard
Positive battery - Terminal 1 Negative battery - Terminal 2	Front turn signal light illuminates

Component Side:

Front Turn Signal Light*

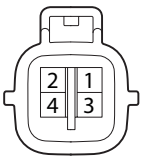

*: LH or RH

Y

B144226E01

(b) Sedan:
  (1) Remove the front turn signal light.
  (2) Apply battery voltage to the terminals and check that the front turn signal light illuminates.
  (3) Reinstall the front turn signal light.
  Standard

Measurement Condition	Standard
Positive battery - Terminal 1 Negative battery - Terminal 2	Front turn signal light illuminates

NG → **REPLACE BULB**

OK

LI

7	CHECK HARNESS AND CONNECTOR (MAIN BODY ECU - FRONT TURN SIGNAL LIGHT)

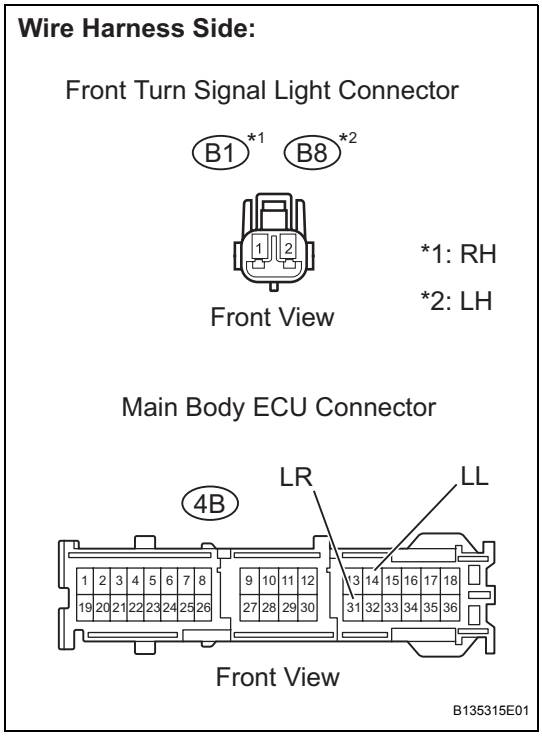

(a) Hatchback:
(1) Disconnect the B1 and B8 front turn signal light connectors.
(2) Disconnect the 4B main body ECU connector.
(3) Measure the resistance.
Standard resistance

Tester Connection	Specified Condition
4B-31 (LR) - B1-1	Below 1 Ω
4B-14 (LL) - B8-1	Below 1 Ω
4B-31 (LR) or B1-1 - Body ground	10 kΩ or higher
4B-14 (LL) or B8-1 - Body ground	10 kΩ or higher

(4) Reconnect the front turn signal light connectors.
(5) Reconnect the main body ECU connector.

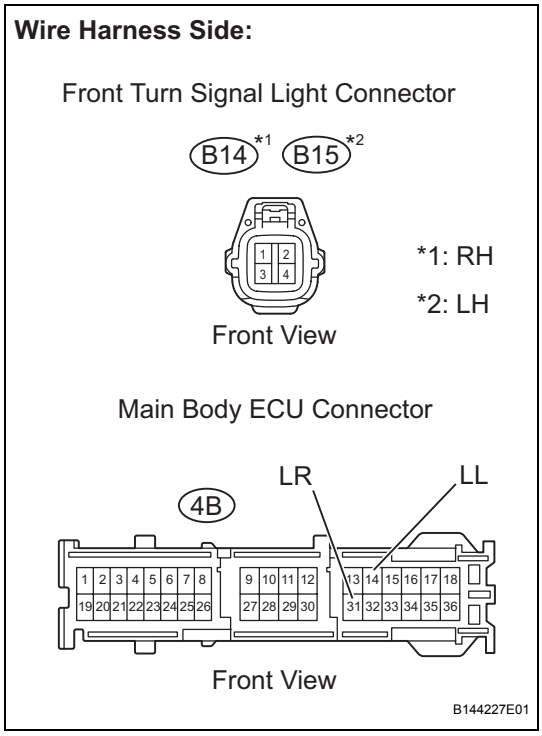

(b) Sedan:
(1) Disconnect the B14 and B15 front turn signal light (Headlight assembly) connectors.
(2) Disconnect the 4B main body ECU connector.
(3) Measure the resistance.
Standard resistance

Tester Connection	Specified Condition
4B-31 (LR) - B14-1	Below 1 Ω
4B-14 (LL) - B15-1	Below 1 Ω
4B-31 (LR) or B14-1 - Body ground	10 kΩ or higher
4B-14 (LL) or B15-1 - Body ground	10 kΩ or higher

(4) Reconnect the front turn signal light connectors.
(5) Reconnect the main body ECU connector.

NG → **REPAIR OR REPLACE HARNESS OR CONNECTOR**

OK

REPAIR OR REPLACE HARNESS OR CONNECTOR (FRONT TURN SIGNAL LIGHT - BODY GROUND)

8 INSPECT BULB (SIDE TURN SIGNAL LIGHT BULB)

Component Side:

Side Turn Signal Light Assembly*

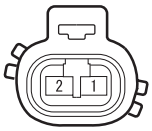

*: LH or RH

B129906E01

(a) Remove the side turn signal light assembly.
(b) Apply battery voltage to the terminals and check that the side turn signal light illuminates.
Standard

Measurement Condition	Standard
Positive battery - Terminal 1 Negative battery - Terminal 2	Side turn signal light illuminates

(c) Reinstall the side turn signal light assembly.

NG → **REPLACE BULB**

OK

LI

9 CHECK HARNESS AND CONNECTOR (MAIN BODY ECU - SIDE TURN SIGNAL LIGHT ASSEMBLY)

Wire Harness Side:

Side Turn Signal Light Assembly Connector

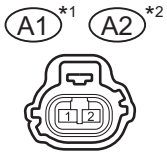

Front View

*1: RH
*2: LH

Main Body ECU Connector

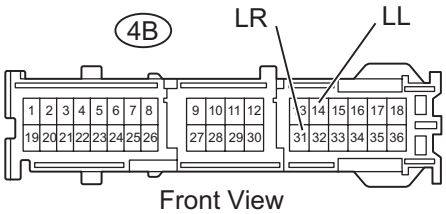

Front View

B135316E01

(a) Disconnect the A1 and A2 side turn signal light assembly connectors.
(b) Disconnect the 4B main body ECU connector.
(c) Measure the resistance.
Standard resistance

Tester Connection	Specified Condition
4B-31 (LR) - A1-1	Below 1 Ω
4B-14 (LL) - A2-1	Below 1 Ω
4B-31 (LR) or A1-1 - Body ground	10 kΩ or higher
4B-14 (LL) or A2-1 - Body ground	10 kΩ or higher

(d) Reconnect the side turn signal light assembly connectors.
(e) Reconnect the main body ECU connector.

NG → **REPAIR OR REPLACE HARNESS OR CONNECTOR**

OK

REPAIR OR REPLACE HARNESS OR CONNECTOR (SIDE TURN SIGNAL LIGHT ASSEMBLY - BODY GROUND)

10	INSPECT BULB (REAR TURN SIGNAL LIGHT BULB)

Component Side:

Rear Combination Light Assembly*

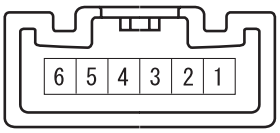

*: LH or RH

B129860E04

(a) Hatchback:
(1) Remove the rear combination light assembly.
(2) Apply battery voltage to the terminals and check that the rear turn signal light illuminates.
Standard

Measurement Condition	Standard
Positive battery - Terminal 3 Negative battery - Terminal 6	Rear turn signal light illuminates

(3) Reinstall the rear combination light assembly.

Component Side:

Rear Combination Light Assembly*

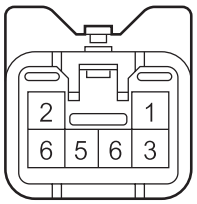

*: LH or RH

H

B141033E01

(b) Sedan:
(1) Remove the rear combination light assembly.
(2) Apply battery voltage to the terminals and check that the rear turn signal light illuminates.
Standard

Measurement Condition	Standard
Positive battery - Terminal 2 Negative battery - Terminal 6	Rear turn signal light illuminates

(3) Reinstall the rear combination light assembly.

NG → **REPLACE BULB**

OK

LI

11	CHECK HARNESS AND CONNECTOR (MAIN BODY ECU - REAR TURN SIGNAL LIGHT)

Wire Harness Side:

Rear Combination Light Assembly Connector

Front View

*1: RH

*2: LH

Main Body ECU Connector

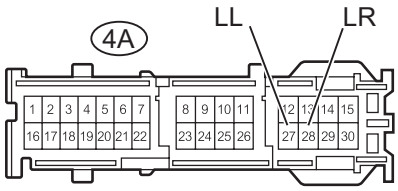

Front View

B131873E04

(a) Hatchback:
  (1) Disconnect the J3 and J4 rear combination light assembly connectors.
  (2) Disconnect the 4A main body ECU connector.
  (3) Measure the resistance.
  Standard resistance

Tester Connection	Specified Condition
4A-28 (LR) - J3-3	Below 1 Ω
4B-27 (LL) - J4-3	Below 1 Ω
4A-28 (LR) or J3-3 - Body ground	10 kΩ or higher
4A-27 (LL) or J4-3 - Body ground	10 kΩ or higher

  (4) Reconnect the rear combination light assembly connectors.
  (5) Reconnect the main body ECU connector.

Wire Harness Side:

Rear Combination Light Assembly Connector

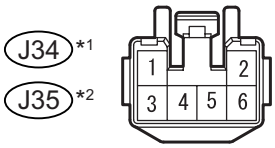

*1: RH

*2: LH

Front View

Main Body ECU Connector

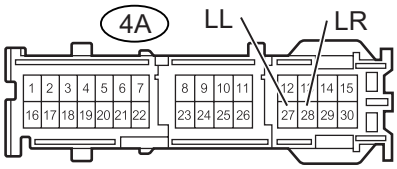

Front View

B141726E03

(b) Sedan:
  (1) Disconnect the J34 and J35 rear combination light assembly connectors.
  (2) Disconnect the 4A main body ECU connector.
  (3) Measure the resistance.
  Standard resistance

Tester Connection	Specified Condition
4A-28 (LR) - J34-2	Below 1 Ω
4B-27 (LL) - J35-2	Below 1 Ω
4A-28 (LR) or J34-2 - Body ground	10 kΩ or higher
4A-27 (LL) or J35-2 Body ground	10 kΩ or higher

  (4) Reconnect the rear combination light assembly connectors.
  (5) Reconnect the main body ECU connector.

NG → **REPAIR OR REPLACE HARNESS OR CONNECTOR**

OK

REPAIR OR REPLACE HARNESS OR CONNECTOR (REAR TURN SIGNAL LIGHT - BODY GROUND)

Hazard Warning Switch Circuit

DESCRIPTION

When the hazard warning signal switch is turned on, the turn signal flasher relay in the main body ECU turns on to flash the hazard warning signal lights.

WIRING DIAGRAM

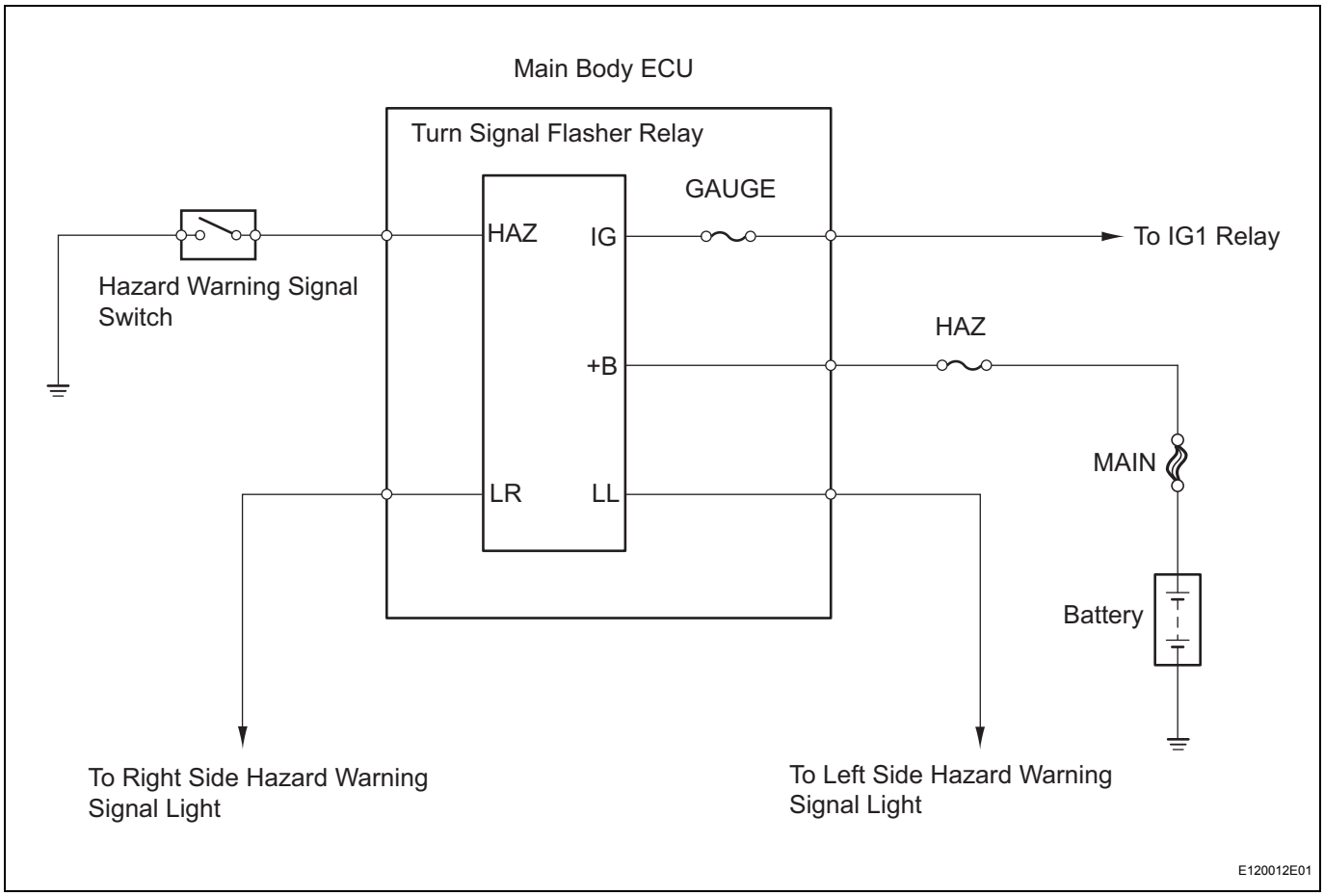

INSPECTION PROCEDURE

1	PERFORM ACTIVE TEST BY INTELLIGENT TESTER

(a) Connect the intelligent tester to the DLC3.
(b) Turn the ignition switch ON and turn the tester ON.
(c) Select the item below in the ACTIVE TEST and then check the relay operation.

ACTIVE TEST

Item	Test Details/Display (Range)	Diagnostic Note
HAZARD	HAZARD ON/OFF	-

OK:
All hazard warning signal lights flash.

OK	Go to step 4

NG

2 INSPECT FUSE (GAUGE, HAZ)

(a) Remove the GAUGE fuse from the main body ECU.
(b) Remove the HAZ fuse from the engine room relay block.
(c) Measure the resistance.
Standard resistance:
Below 1 Ω
(d) Reinstall the GAUGE and HAZ fuses.

NG → **REPLACE FUSE**

OK

3 CHECK HARNESS AND CONNECTOR (FUSE - MAIN BODY ECU)

Wire Harness Side:

Main Body ECU Connector

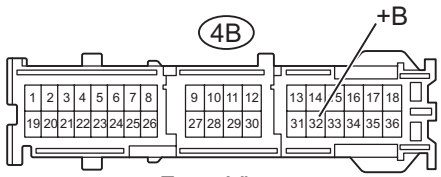

Front View

B135312E02

(a) Disconnect the 4B main body ECU connector.
(b) Measure the voltage.
Standard voltage

Tester Connection	Condition	Specified Condition
4B-32 (+B) - Body ground	Always	11 to 14 V

(c) Reconnect the main body ECU connector.

NG → **REPAIR OR REPLACE HARNESS OR CONNECTOR**

OK

REPLACE MAIN BODY ECU

4 INSPECT HAZARD WARNING SIGNAL SWITCH

Component Side:

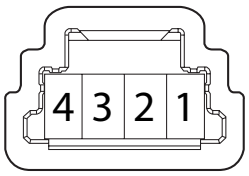

Hazard Warning Signal Switch

Y

E107908E06

(a) Hatchback:
(1) Remove the hazard warning signal switch.
(2) Measure the resistance.
Standard resistance

Tester Connection	Condition	Specified Condition
1 - 4	OFF	10 kΩ or higher
1 - 4	ON	Below 1 Ω

(3) Install the hazard warning signal switch.

Component Side:

Hazard Warning Signal Switch

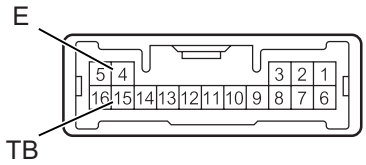

B141750E02

(b) Sedan:
(1) Remove the hazard warning signal switch.
(2) Measure the resistance.
Standard resistance

Tester Connection	Condition	Specified Condition
15 (TB) - 4 (E)	OFF	10 kΩ or higher
15 (TB) - 4 (E)	ON	Below 1 Ω

(3) Install the hazard warning signal switch.

NG → **REPLACE HAZARD WARNING SIGNAL SWITCH**

OK

LI

5	CHECK HARNESS AND CONNECTOR (HAZARD WARNING SIGNAL SWITCH - MAIN BODY ECU)

Wire Harness Side:

Hazard Warning Signal Switch Connector

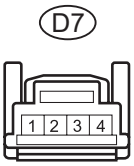

Front View

Main Body ECU Connector

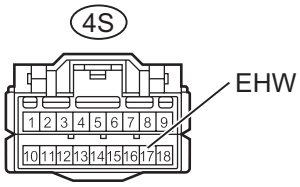

Front View

B135317E01

(a) Hatchback:
(1) Disconnect the D7 hazard warning signal switch connector.
(2) Disconnect the 4S main body ECU connector.
(3) Measure the resistance.
Standard resistance

Tester Connection	Specified Condition
D7-4 - 4S-17 (EHW)	Below 1 Ω
D7-4 or 4S-17 (EHW) - Body ground	10 kΩ or higher

(4) Reconnect the hazard warning signal switch connector.
(5) Reconnect the main body ECU connector.

Wire Harness Side:

Hazard Warning Signal Switch Connector

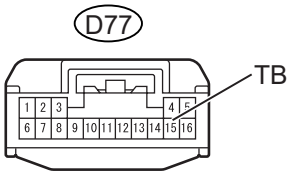

Front View

Main Body ECU Connector

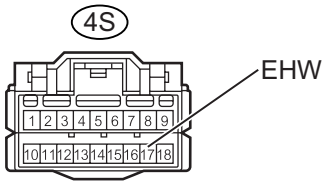

Front View

B141751E02

(b) Sedan:
(1) Disconnect the D77 hazard warning signal switch connector.
(2) Disconnect the 4S main body ECU connector.
(3) Measure the resistance.
Standard resistance

Tester Connection	Specified Condition
D77-15 (TB) - 4S-17 (EHW)	Below 1 Ω
D77-15 (TB) or 4S-17 (EHW) - Body ground	10 kΩ or higher

(4) Reconnect the hazard warning signal switch connector.
(5) Reconnect the main body ECU connector.

NG → **REPAIR OR REPLACE HARNESS OR CONNECTOR**

OK

REPAIR OR REPLACE HARNESS OR CONNECTOR (HAZARD WARNING SIGNAL SWITCH - BODY GROUND)

LI

Taillight Circuit

DESCRIPTION

When the light control switch, located on the headlight dimmer switch, is turned to the TAIL position, the front position lights, front marker lights, rear taillights and license plate light(s) illuminate.

WIRING DIAGRAM

Hatchback:

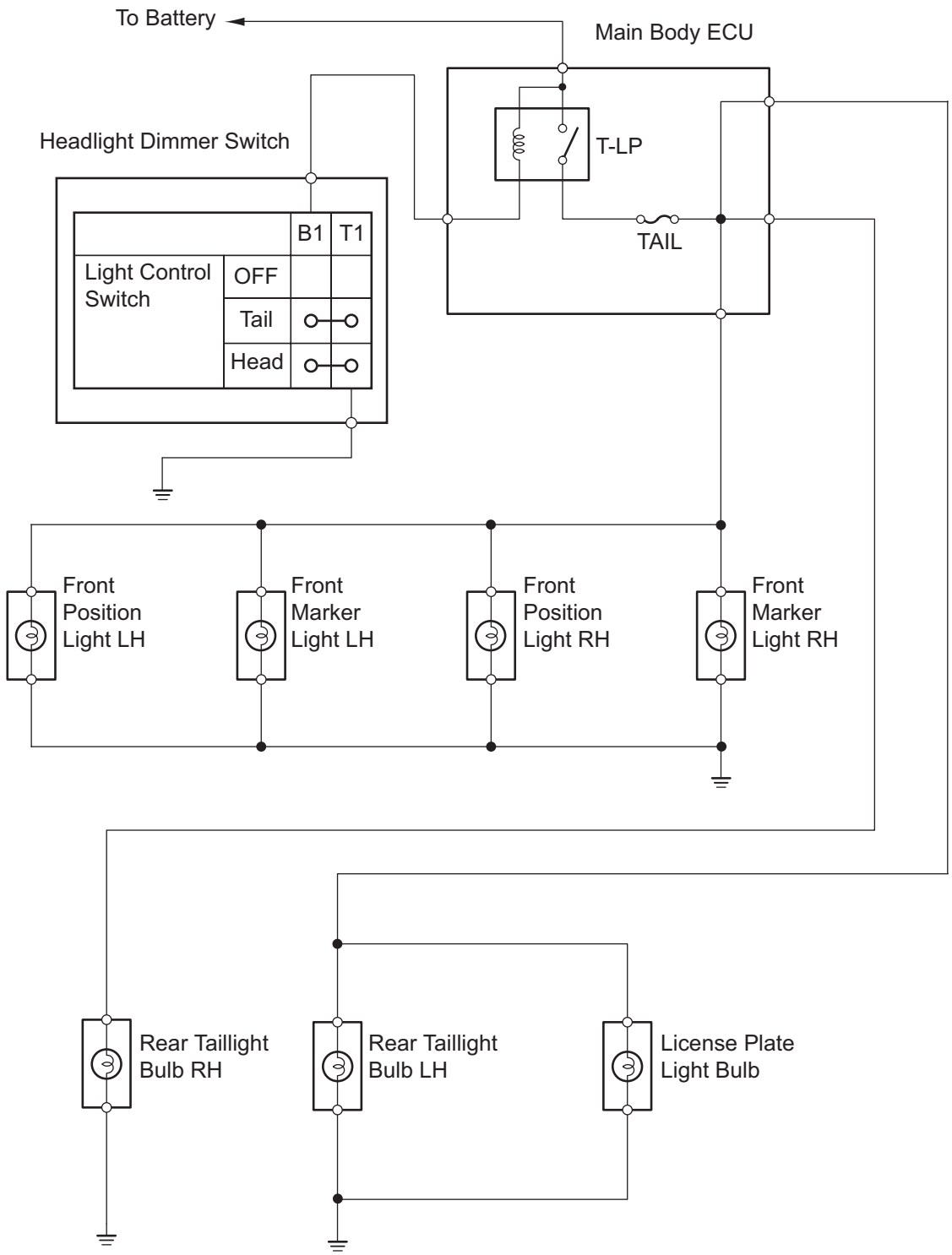

Sedan (w/ Front Fog Light):

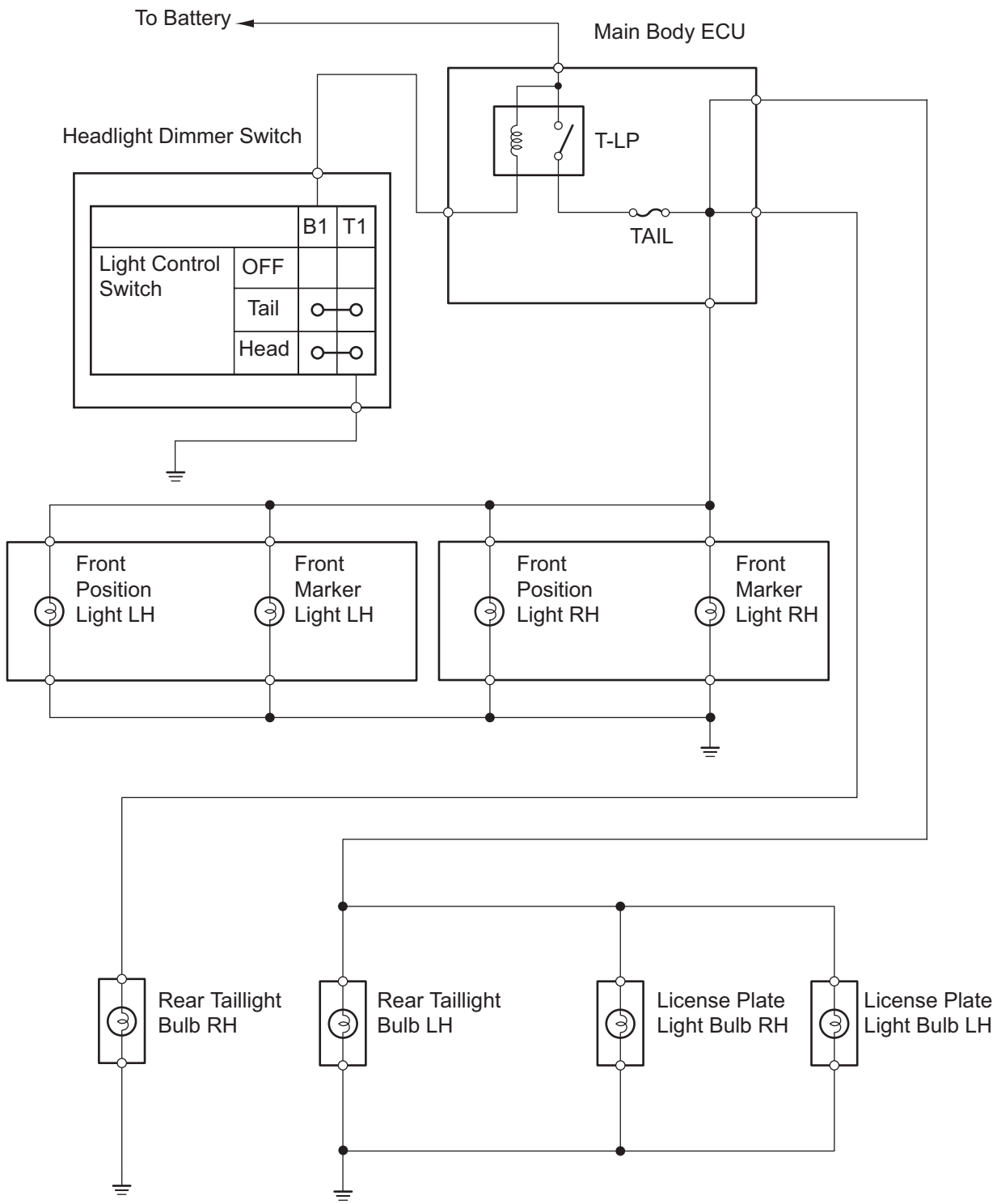

B144232E01

Sedan (w/o Front Fog Light):

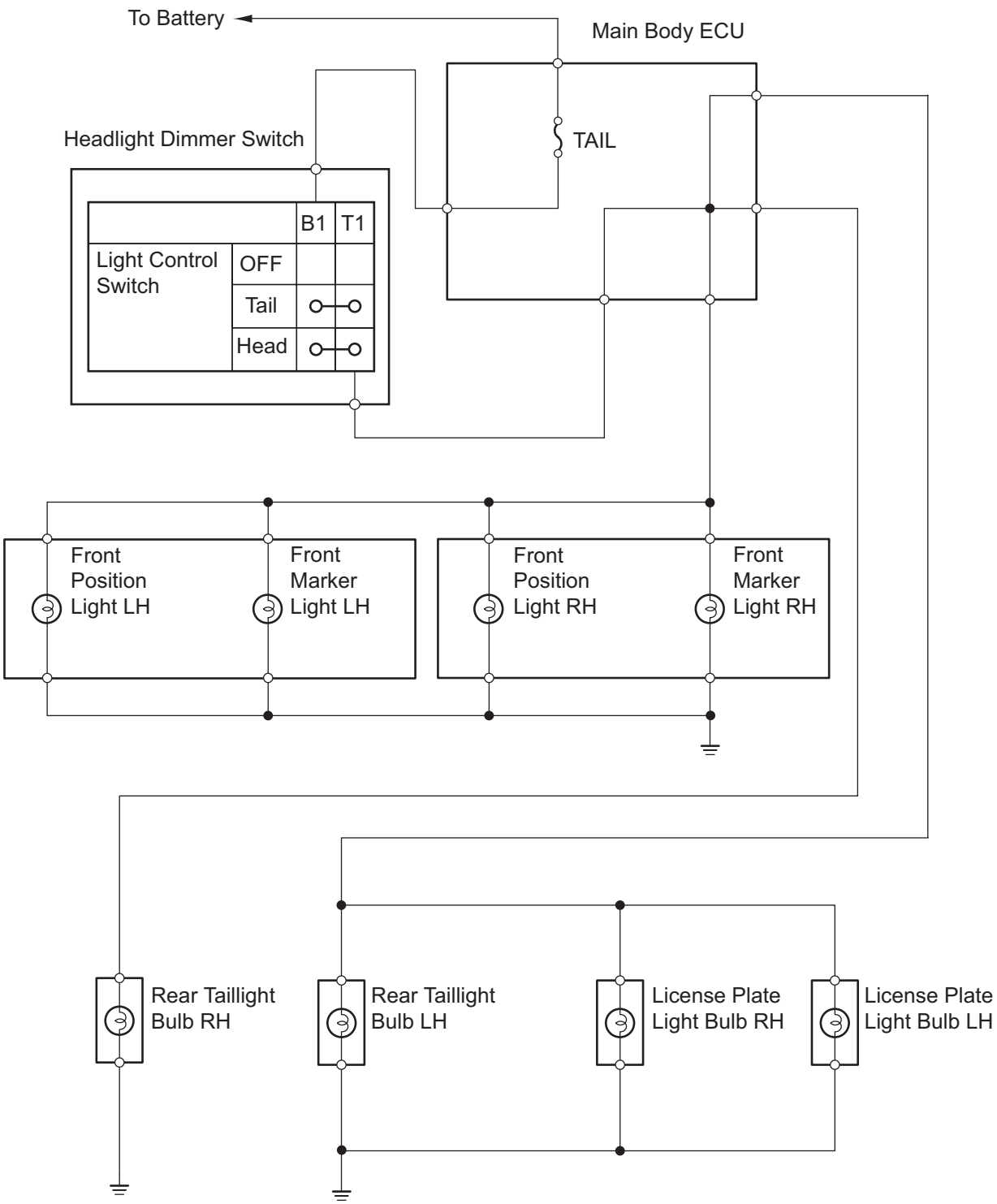

B144233E01

INSPECTION PROCEDURE

1	CHECK WHETHER LIGHTS ILLUMINATE

(a) Check whether the following lights illuminate: Front position lights, Rear taillights and License plate light.

Result

Illumination Condition	Proceed To
All lights do not illuminate	A
Front position lights do not illuminate	B
Front marker lights do not illuminate	C
Rear taillights do not illuminate	D
License plate light does not illuminate	E

B → Go to step 10

C → Go to step 12

D → Go to step 14

E → Go to step 16

A

2	CHECK VEHICLE SPECIFICATIONS

(a) Check the vehicle type.
Result

Vehicle Type	Proceed To
Hatchback, Sedan with front fog light (w/ T-LP relay)	A
Sedan without front fog light (w/o T-LP relay)	B

B → Go to step 7

A

3	INSPECT FUSE (TAIL)

(a) Remove the TAIL fuse from the main body ECU.
(b) Measure the resistance.
Standard resistance:
Below 1 Ω
(c) Reconnect the TAIL fuse.

NG → REPLACE FUSE

OK

4 PERFORM ACTIVE TEST BY INTELLIGENT TESTER (TAIL LIGHT)

(a) Connect the intelligent tester with CAN VIM to the DLC3.
(b) Turn the ignition switch ON.
(c) Turn the intelligent tester main switch ON.
(d) Select the item below in the ACTIVE TEST and then check the relay operation.

Main Body ECU

Item	Test Details	Diagnostic Note
TAIL LIGHT	Taillight relay ON/OFF	-

OK:
Taillight comes on.

NG → **PROCEED TO NEXT INSPECTION PROCEDURE SHOWN IN PROBLEM SYMPTOMS TABLE**

OK

5 INSPECT HEADLIGHT DIMMER SWITCH

Component Side:

Headlight Dimmer Switch

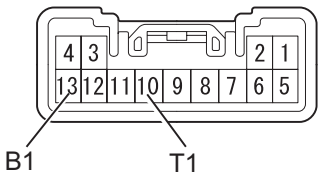

E123010E17

(a) Remove the headlight dimmer switch.
(b) Inspect the light control switch.
(c) Measure the resistance.
Standard resistance

Tester Connection	Condition	Specified Condition
10 (T1) - 13 (B1)	TAIL	Below 1 Ω
10 (T1) - 13 (B1)	OFF	10 kΩ or higher
10 (T1) - 13 (B1)	HEAD	Below 1 Ω
10 (T1) - 13 (B1)	OFF	10 kΩ or higher

(d) Reinstall the headlight dimmer switch.

NG → **REPLACE HEADLIGHT DIMMER SWITCH**

OK

6 CHECK HARNESS AND CONNECTOR (MAIN BODY ECU - HEADLIGHT DIMMER SWITCH)

Wire Harness Side:

Headlight Dimmer Switch Connector

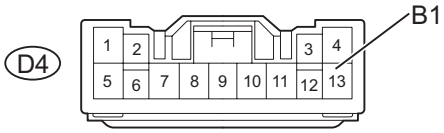

Front View

Y

B124050E09

(a) Disconnect the D4 headlight dimmer switch connector.
(b) Measure the voltage.
Standard voltage

Tester Connection	Specified Condition
D4-13 (B1) - Body Ground	11 to 14 V

(c) Reconnect the headlight dimmer switch connector.

NG → **REPAIR OR REPLACE HARNESS OR CONNECTOR**

LI

OK

REPAIR OR REPLACE HARNESS OR CONNECTOR (HEADLIGHT DIMMER SWITCH - BODY GROUND)

7 INSPECT FUSE (TAIL)

(a) Remove the TAIL fuse from the main body ECU.
(b) Measure the resistance.
Standard resistance:
Below 1 Ω
(c) Reconnect the TAIL fuse.

NG → **REPLACE FUSE**

OK

8 INSPECT HEADLIGHT DIMMER SWITCH

Component Side:

Headlight Dimmer Switch

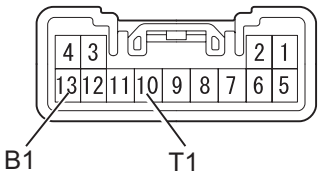

E123010E17

(a) Remove the headlight dimmer switch.
(b) Inspect the light control switch.
(c) Measure the resistance.
Standard resistance

Tester Connection	Condition	Specified Condition
10 (T1) - 13 (B1)	TAIL	Below 1 Ω
10 (T1) - 13 (B1)	OFF	10 kΩ or higher
10 (T1) - 13 (B1)	HEAD	Below 1 Ω
10 (T1) - 13 (B1)	OFF	10 kΩ or higher

(d) Reinstall the headlight dimmer switch.

NG → **REPLACE HEADLIGHT DIMMER SWITCH**

OK

9 CHECK HARNESS AND CONNECTOR (MAIN BODY ECU - HEADLIGHT DIMMER SWITCH)

Wire Harness Side:

Main Body ECU Connector

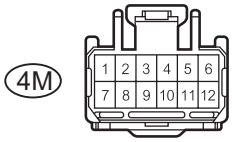

Front View

Main Body ECU Connector

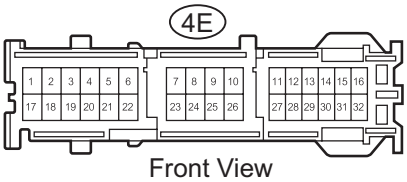

Front View

Headlight Dimmer Switch Connector

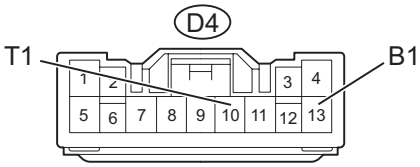

Front View

B144230E01

(a) Disconnect the D4 headlight dimmer switch connector.
(b) Disconnect the 4M and 4E main body ECU connectors.
(c) Measure the resistance.
Standard resistance

Tester Connection	Specified Condition
D4-13 (B1) - 4M-4	Below 1 Ω
D4-10 (T1) - 4E-10	Below 1 Ω
D4-13 (B1) or 4M-4 - Body Ground	10 kΩ or higher
D4-10 (T1) or 4E-10 - Body Ground	10 kΩ or higher

(d) Reconnect the headlight dimmer switch connector.
(e) Reconnect the main body ECU connectors.

NG → **REPAIR OR REPLACE HARNESS OR CONNECTOR**

OK

REPLACE MAIN BODY ECU

10 INSPECT BULB (FRONT POSITION LIGHT BULB)

Component Side:

Front Position Light*

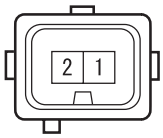

*: LH or RH

B141827E01

(a) Hatchback:
(1) Remove the front position light.
(2) Apply battery voltage to the terminals and check that the front position light illuminates.
Standard

Measurement Condition	Standard
Positive battery - Terminal 1 Negative battery - Terminal 2	Front position light illuminates

(3) Reinstall the front position light.

Component Side:

Front Position Light*

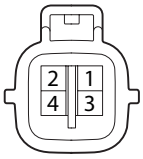

*: LH or RH

Y B144226E02

(b) Sedan:
(1) Remove the front position light.
(2) Apply battery voltage to the terminals and check that the front position light illuminates.
Standard

Measurement Condition	Standard
Positive battery - Terminal 3 Negative battery - Terminal 2	Front position light illuminates

(3) Reinstall the front position light.

NG → **REPLACE BULB**

OK

LI

11 CHECK HARNESS AND CONNECTOR (MAIN BODY ECU - FRONT POSITION LIGHT)

Wire Harness Side:

Front Position Light Connector

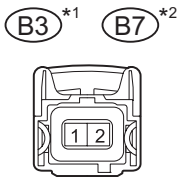

Front View

*1: RH
*2: LH

Main Body ECU Connector

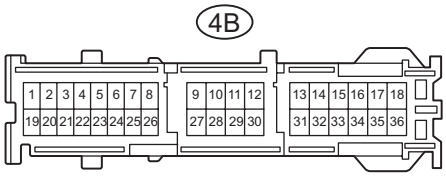

Front View

B135318E01

(a) Hatchback:
(1) Disconnect the B3 and B4 front position light connectors.
(2) Disconnect the 4B main body ECU connector.
(3) Measure the resistance.
Standard resistance

Tester Connection	Specified Condition
4B-33 - B3-1	Below 1 Ω
4B-33 - B7-1	Below 1 Ω
4B-33 or B3-1 - Body ground	10 kΩ or higher
4B-33 or B7-1 - Body ground	10 kΩ or higher

(4) Reconnect the front position light connectors.
(5) Reconnect the main body ECU connector.

Wire Harness Side:

Front Position Light Connector

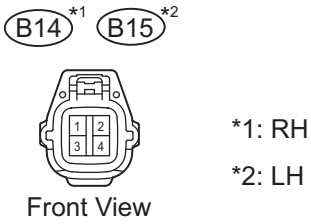

Main Body ECU Connector

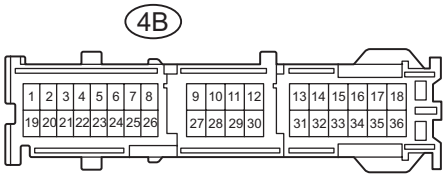

B144227E02

(b) Sedan:
(1) Disconnect the B14 and B15 front position light connectors.
(2) Disconnect the 4B main body ECU connector.
(3) Measure the resistance.
Standard resistance

Tester Connection	Specified Condition
4B-33 - B14-3	Below 1 Ω
4B-33 - B15-3	Below 1 Ω
4B-33 or B14-3 - Body ground	10 kΩ or higher
4B-33 or B15-3 - Body ground	10 kΩ or higher

(4) Reconnect the front position light connectors.
(5) Reconnect the main body ECU connector.

NG → **REPAIR OR REPLACE HARNESS OR CONNECTOR**

OK

REPAIR OR REPLACE HARNESS OR CONNECTOR (FRONT POSITION LIGHT - BODY GROUND)

12 INSPECT BULB (FRONT MARKER LIGHT)

Component Side:

Front Marker Light*

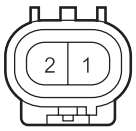

*: LH or RH

B129903E02

(a) Hatchback:
(1) Remove the front marker light.
(2) Apply battery voltage to the terminals and check that the front marker light illuminates.
Standard

Measurement Condition	Standard
Positive battery - Terminal 2 Negative battery - Terminal 1	Front marker light illuminates

(3) Reinstall the front marker light.

Component Side:

Front Marker Light*

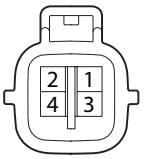

*: LH or RH

Y

B144226E03

(b) Sedan:
(1) Remove the front marker light.
(2) Apply battery voltage to the terminals and check that the front marker light illuminates.
Standard

Measurement Condition	Standard
Positive battery - Terminal 4 Negative battery - Terminal 2	Front marker light illuminates

(3) Reinstall the front marker light.

NG → **REPLACE BULB**

LI

OK

13	CHECK HARNESS AND CONNECTOR (MAIN BODY ECU - FRONT MARKER LIGHT)

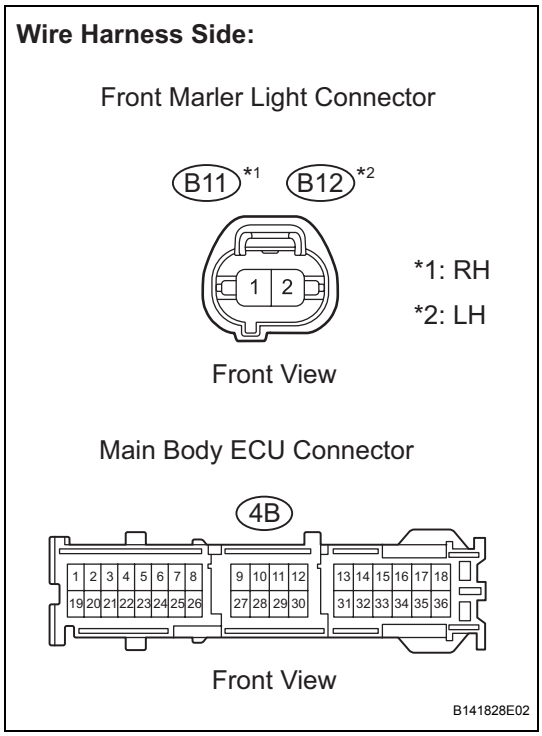

(a) Hatchback:
(1) Disconnect the B11 and B12 front marker light connectors.
(2) Disconnect the 4B main body ECU connector.
(3) Measure the resistance.
Standard resistance

Tester Connection	Specified Condition
4B-33 - B11-2	Below 1 Ω
4B-33 - B12-2	Below 1 Ω
4B-33 or B11-2 - Body ground	10 kΩ or higher
4B-33 or B12-2 - Body ground	10 kΩ or higher

(4) Reconnect the front marker light connectors.
(5) Reconnect the main body ECU connector.

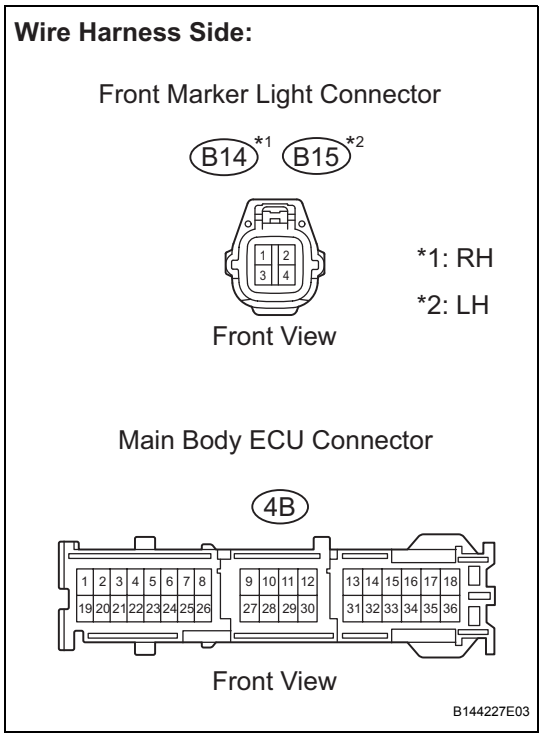

(b) Sedan:
(1) Disconnect the B14 and B15 front marker light connectors.
(2) Disconnect the 4B main body ECU connector.
(3) Measure the resistance.
Standard resistance

Tester Connection	Specified Condition
4B-33 - B14-4	Below 1 Ω
4B-33 - B15-4	Below 1 Ω
4B-33 or B14-4 - Body ground	10 kΩ or higher
4B-33 or B15-4 - Body ground	10 kΩ or higher

(4) Reconnect the front marker light connectors.
(5) Reconnect the main body ECU connector.

NG → **REPAIR OR REPLACE HARNESS OR CONNECTOR**

OK

REPAIR OR REPLACE HARNESS OR CONNECTOR (FRONT MARKER LIGHT - BODY GROUND)

14	INSPECT BULB (REAR TAILLIGHT BULB)

Component Side:

Rear Combination Light Assembly*

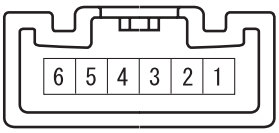

*: LH or RH

B129860E03

(a) Hatchback:
  (1) Remove the rear combination light assembly.
  (2) Apply battery voltage to the terminals and check that the rear taillight illuminates.
  Standard

Measurement Condition	Standard
Positive battery - Terminal 4 Negative battery - Terminal 6	Rear taillight illuminates

  (3) Reinstall the rear combination light assembly.

Component Side:

Rear Combination Light Assembly*

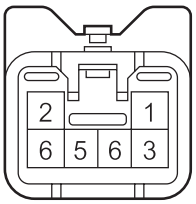

*: LH or RH

H

B141033E01

(b) Sedan:
  (1) Remove the rear combination light assembly.
  (2) Apply battery voltage to the terminals and check that the rear taillight illuminates.
  Standard

Measurement Condition	Standard
Positive battery - Terminal 4 Negative battery - Terminal 6	Rear taillight illuminates

  (3) Reinstall the rear combination light assembly.

NG → **REPLACE BULB**

OK

LI

15	CHECK HARNESS AND CONNECTOR (MAIN BODY ECU - REAR TAILLIGHT)

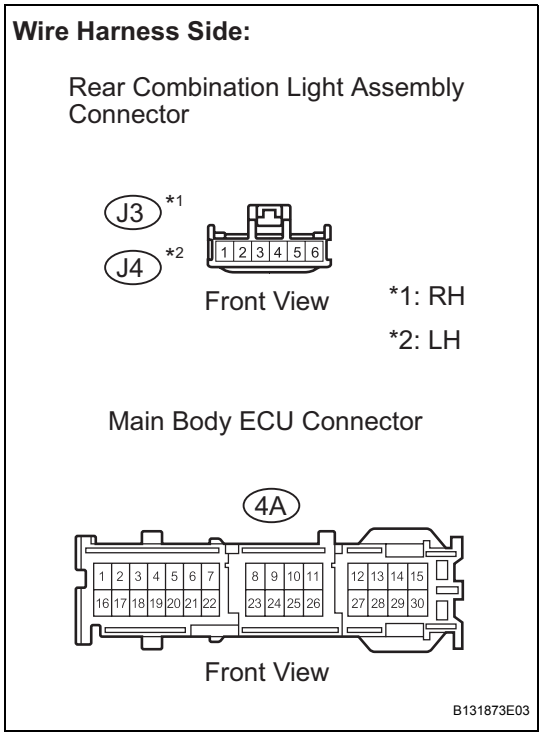

(a) Hatchback:
(1) Disconnect the J3 and J4 rear combination light assembly connectors.
(2) Disconnect the 4A main body ECU connector.
(3) Measure the resistance.
Standard resistance

Tester Connection	Specified Condition
4A-10 - J3-4	Below 1 Ω
4A-29 - J4-4	Below 1 Ω
4A-10 or J3-4 - Body ground	10 kΩ or higher
4A-29 or J4-4 - Body ground	10 kΩ or higher

(4) Reconnect the rear combination light assembly connectors.
(5) Reconnect the main body ECU connector.

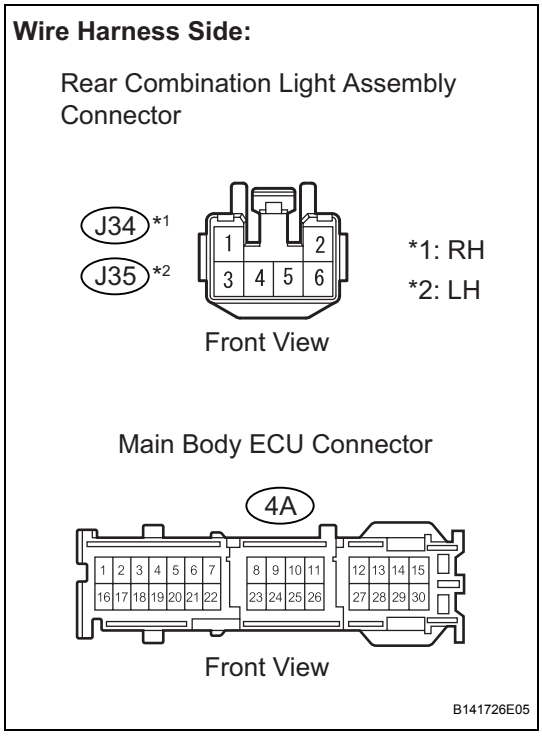

(b) Sedan:
(1) Disconnect the J34 and J35 rear combination light assembly connectors.
(2) Disconnect the 4A main body ECU connector.
(3) Measure the resistance.
Standard resistance

Tester Connection	Specified Condition
4A-10 - J34-4	Below 1 Ω
4A-29 - J35-4	Below 1 Ω
4A-10 or J34-4 - Body ground	10 kΩ or higher
4A-29 or J35-4 - Body ground	10 kΩ or higher

(4) Reconnect the rear combination light assembly connectors.
(5) Reconnect the main body ECU connector.

NG → **REPAIR OR REPLACE HARNESS OR CONNECTOR**

OK

REPAIR OR REPLACE HARNESS OR CONNECTOR (REAR TAILLIGHT - BODY GROUND)

16 INSPECT BULB (LICENSE PLATE LIGHT BULB)

Component Side:

License Plate Light Assemsly

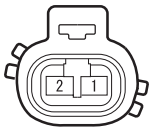

B141830E01

(a) Hatchback:
(1) Remove the license plate light assembly.
(2) Apply battery voltage to the terminals and check that the license plate light illuminates.
Standard

Measurement Condition	Standard
Positive battery - Terminal 2 Negative battery - Terminal 1	License plate light illuminates

(3) Reinstall the license plate light assembly.

Component Side:

License Plate Light Assemsly*

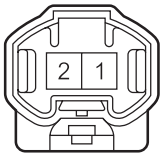

*: LH or RH

B141842E01

(b) Sedan:
(1) Remove the license plate light assembly.
(2) Apply battery voltage to the terminals and check that the license plate light illuminates.
Standard

Measurement Condition	Standard
Positive battery - Terminal 2 Negative battery - Terminal 1	License plate light illuminates

(3) Reinsrall the license plate light assembly.

NG → **REPLACE BULB**

OK

17 CHECK HARNESS AND CONNECTOR (MAIN BODY ECU - LICENSE PLATE LIGHT ASSEMBLY)

Wire Harness Side:

License Plate Light Assembly Connector

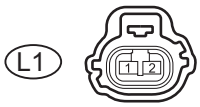

Front View

Main Body ECU Connector

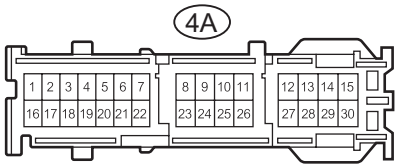

Front View

B133140E02

(a) Hatchback:
(1) Disconnect the L1 license plate light assembly connector.
(2) Disconnect the 4A main body ECU connector.
(3) Measure the resistance.
Standard resistance

Tester Connection	Specified Condition
4A-29 - L1-2	Below 1 Ω
4A-29 or L1-2 - Body ground	10 kΩ or higher

(4) Reconnect the license plate light assembly connector.
(5) Reconnect the main body ECU connector.

LI

Wire Harness Side:

License Plate Light Assembly Connector

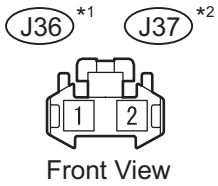

Main Body ECU Connector

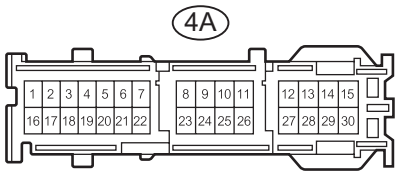

B141841E02

(b) Sedan:
(1) Disconnect the J36 and J37 license plate light assembly connectors.
(2) Disconnect the 4A main body ECU connector.
(3) Measure the resistance.
Standard resistance

Tester Connection	Specified Condition
4A-29 - J36-2	Below 1 Ω
4A-29 - J37-2	Below 1 Ω
4A-29 or J36-2 - Body ground	10 kΩ or higher
4A-29 or J37-2 - Body ground	10 kΩ or higher

(4) Reconnect the license plate light assembly connectors.
(5) Reconnect the main body ECU connector.

NG → **REPAIR OR REPLACE HARNESS OR CONNECTOR**

OK

REPAIR OR REPLACE HARNESS OR CONNECTOR (LICENSE PLATE LIGHT ASSEMBLY - BODY GROUND)

Back-up Light Circuit

DESCRIPTION

A/T models: The park / neutral position switch turns on when the shift lever is moved into the R position, causing the back-up light to illuminate.
M/T models: The back-up light switch turns on when the shift lever is moved into the R position, causing the back-up light to illuminate.

WIRING DIAGRAM

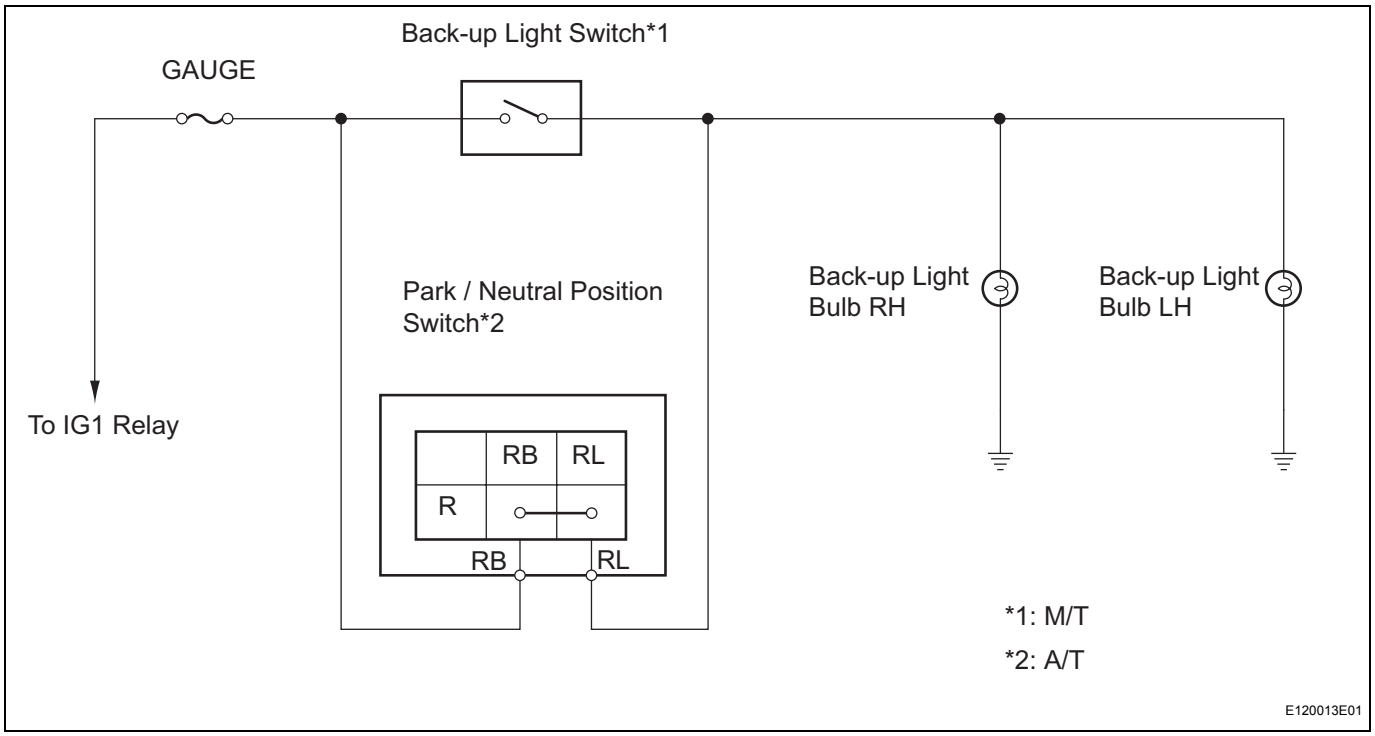

INSPECTION PROCEDURE

1	INSPECT FUSE (GAUGE)

(a) Remove the GAUGE fuse from the main body ECU.
(b) Measure the resistance.
Standard resistance:
Below 1 Ω
(c) Reinstall the GAUGE fuse.

NG → **REPLACE FUSE**

OK

2 INSPECT BULB (BACK-UP LIGHT BULB)

Component Side:

Rear Combination Light Assembly*

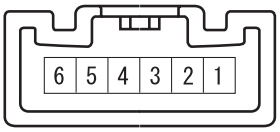

*: LH or RH

B129860E01

(a) Hatchback:
(1) Remove the rear combination light assembly.
(2) Apply battery voltage to the terminals and check that the back-up light illuminates.
Standard

Measurement Condition	Standard
Positive battery - Terminal 1 Negative battery - Terminal 6	Back-up light illuminates

(3) Reinstall the rear combination light assembly.

Component Side:

Rear Combination Light Assembly*

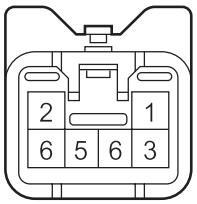

*: LH or RH

H

B141033E01

(b) Sedan:
(1) Remove the rear combination light assembly.
(2) Apply battery voltage to the terminals and check that the back-up light illuminates.
Standard

Measurement Condition	Standard
Positive battery - Terminal 5 Negative battery - Terminal 6	Back-up light illuminates

(c) Reinstall the back-up light bulbs.

NG → **REPLACE BULB**

OK

3 CHECK TRANSAXLE TYPE

(a) Check the vehicle's transaxle type.
Result

Transaxle Type	Proceed To
A/T	A
M/T	B

B → **Go to step 7**

A

LI

4 INSPECT PARK / NEUTRAL POSITION SWITCH

Component Side:

Park / Neutral Position Switch

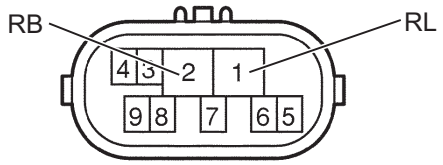

C110340E19

(a) Disconnect the C27 park / neutral position switch connector.
(b) Measure the resistance.
Standard resistance

Tester Connection	Shift Position	Specified Connection
2 (RB) - 1 (RL)	R	Below 1 Ω
2 (RB) - 1 (RL)	Except R	10 kΩ or higher

(c) Reconnect the park / neutral position switch connector.

NG → **REPLACE PARK / NEUTRAL POSITION SWITCH**

OK

5 CHECK HARNESS AND CONNECTOR (FUSE - PARK / NEUTRAL POSITION SWITCH)

Wire Harness Side:

Park / Neutral Position Switch Connector

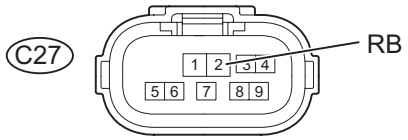

Front View

Y

B124048E09

(a) Disconnect the C27 park / neutral position switch connector.
(b) Measure the voltage.
Standard voltage

Tester Connection	Condition	Specified Condition
C27-2 (RB) - Body ground	Ignition switch ON	11 to 14 V

(c) Reconnect the park / neutral position switch connector.

NG → **REPAIR OR REPLACE HARNESS OR CONNECTOR**

OK

LI

6	CHECK HARNESS AND CONNECTOR (PARK / NEUTRAL POSITION SWITCH - REAR BACK-UP LIGHT)

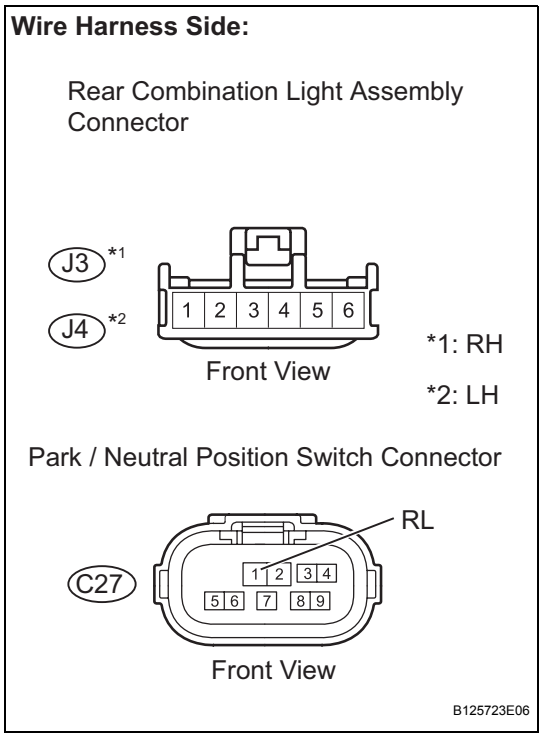

(a) Hatchback:
(1) Disconnect the C27 park / neutral position switch connector.
(2) Disconnect the J3 and J4 rear combination light assembly connectors.
(3) Measure the resistance.
Standard resistance

Tester Connection	Specified Condition
C27-1 (RL) - J3-1	Below 1 Ω
C27-1 (RL) - J4-1	Below 1 Ω
C27-1 (RL) or J3-1 - Body ground	10 kΩ or higher
C27-1 (RL) or J4-1 - Body ground	10 kΩ or higher

(4) Reconnect the park / neutral position switch connector.
(5) Reconnect the rear combination light assembly connectors.

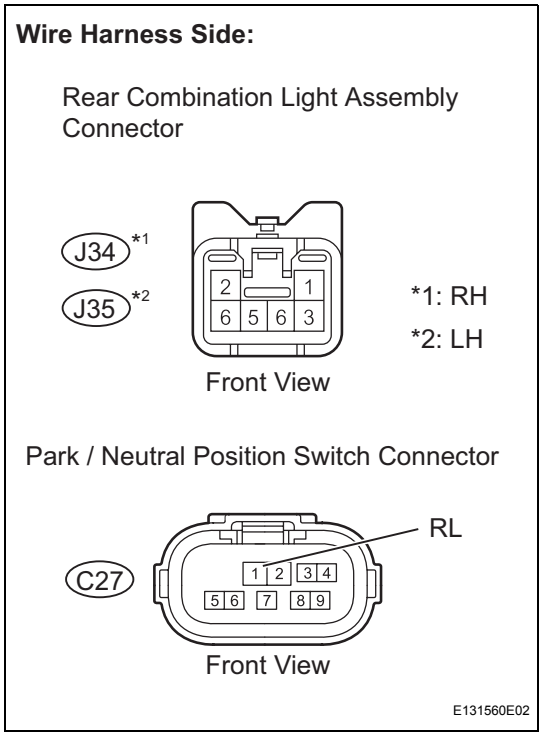

(b) Sedan:
(1) Disconnect the C27 park / neutral position switch connector.
(2) Disconnect the J34 and J35 rear combination light assembly connectors.
(3) Measure the resistance.
Standard resistance

Tester Connection	Specified Condition
C27-1 (RL) - J34-1	Below 1 Ω
C27-1 (RL) - J35-1	Below 1 Ω
C27-1 (RL) or J34-1 - Body ground	10 kΩ or higher
C27-1 (RL) or J35-1 - Body ground	10 kΩ or higher

(4) Reconnect the park / neutral position switch connector.
(5) Reconnect the rear combination light assembly connectors.

NG → **REPAIR OR REPLACE HARNESS OR CONNECTOR**

OK

REPAIR OR REPLACE HARNESS OR CONNECTOR (BACK-UP LIGHT - BODY GROUND)

7 INSPECT BACK-UP LIGHT SWITCH

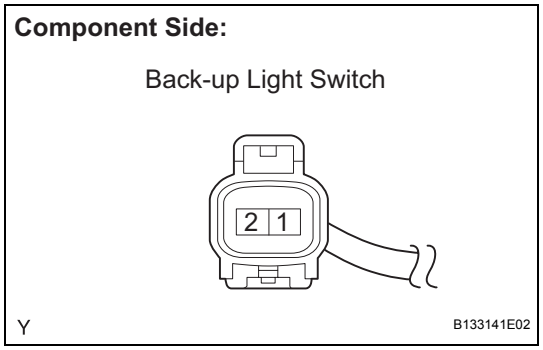

(a) Disconnect the back-up light switch connector.
(b) Measure the resistance.
Standard resistance

Tester Connection	Shift Position	Specified Connection
1 - 2	R	Below 1 Ω
1 - 2	Except R	10 kΩ or higher

(c) Reconnect the back-up light switch connector.

NG → **REPLACE BACK-UP LIGHT SWITCH**

OK

8 CHECK HARNESS AND CONNECTOR (FUSE - BACK-UP LIGHT SWITCH)

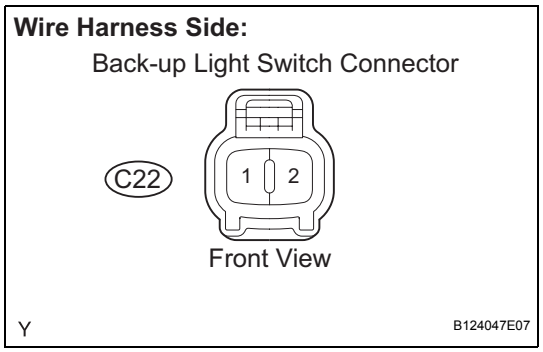

(a) Disconnect the C22 back-up light switch connector.
(b) Measure the voltage.
Standard voltage

Tester Connection	Condition	Specified Condition
C22-2 - Body ground	Ignition switch ON	11 to 14 V

(c) Reconnect the back-up light switch connector.

NG → **REPAIR OR REPLACE HARNESS OR CONNECTOR**

OK

9	CHECK HARNESS AND CONNECTOR (BACK-UP LIGHT SWITCH - BACK-UP LIGHT)

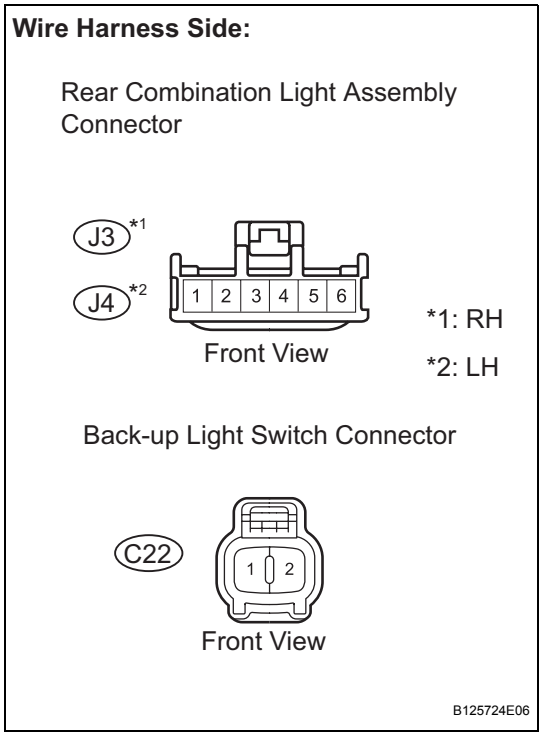

(a) Hatchback:
(1) Disconnect the C22 back-up light switch connector.
(2) Disconnect the J3 and J4 rear combination light assembly connectors.
(3) Measure the resistance.
Standard resistance

Tester Connection	Specified Condition
C22-1 - J3-1	Below 1 Ω
C22-1 - J4-1	Below 1 Ω
C22-1 or J3-1 - Body ground	10 kΩ or higher
C22-1 or J4-1 - Body ground	10 kΩ or higher

(4) Reconnect the back-up light switch connector.
(5) Reconnect the rear combination light assembly connectors.

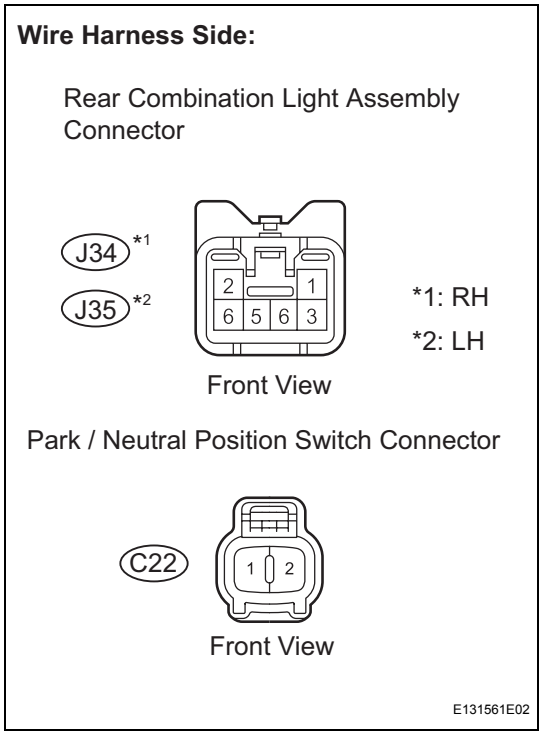

(b) Sedan:
(1) Disconnect the C22 back-up light switch connector.
(2) Disconnect the J34 and J35 rear combination light assembly connectors.
(3) Measure the resistance.
Standard resistance

Tester Connection	Specified Condition
C22-1 - J34-1	Below 1 Ω
C22-1 - J35-1	Below 1 Ω
C22-1 or J34-1 - Body ground	10 kΩ or higher
C22-1 or J35-1 - Body ground	10 kΩ or higher

(4) Reconnect the back-up light switch connector.
(5) Reconnect the rear combination light assembly connectors.

NG → **REPAIR OR REPLACE HARNESS OR CONNECTOR**

OK

REPAIR OR REPLACE HARNESS OR CONNECTOR (BACK-UP LIGHT - BODY GROUND)

Light Control Switch Circuit

DESCRIPTION

This circuit detects the state of the headlight dimmer switch.

WIRING DIAGRAM

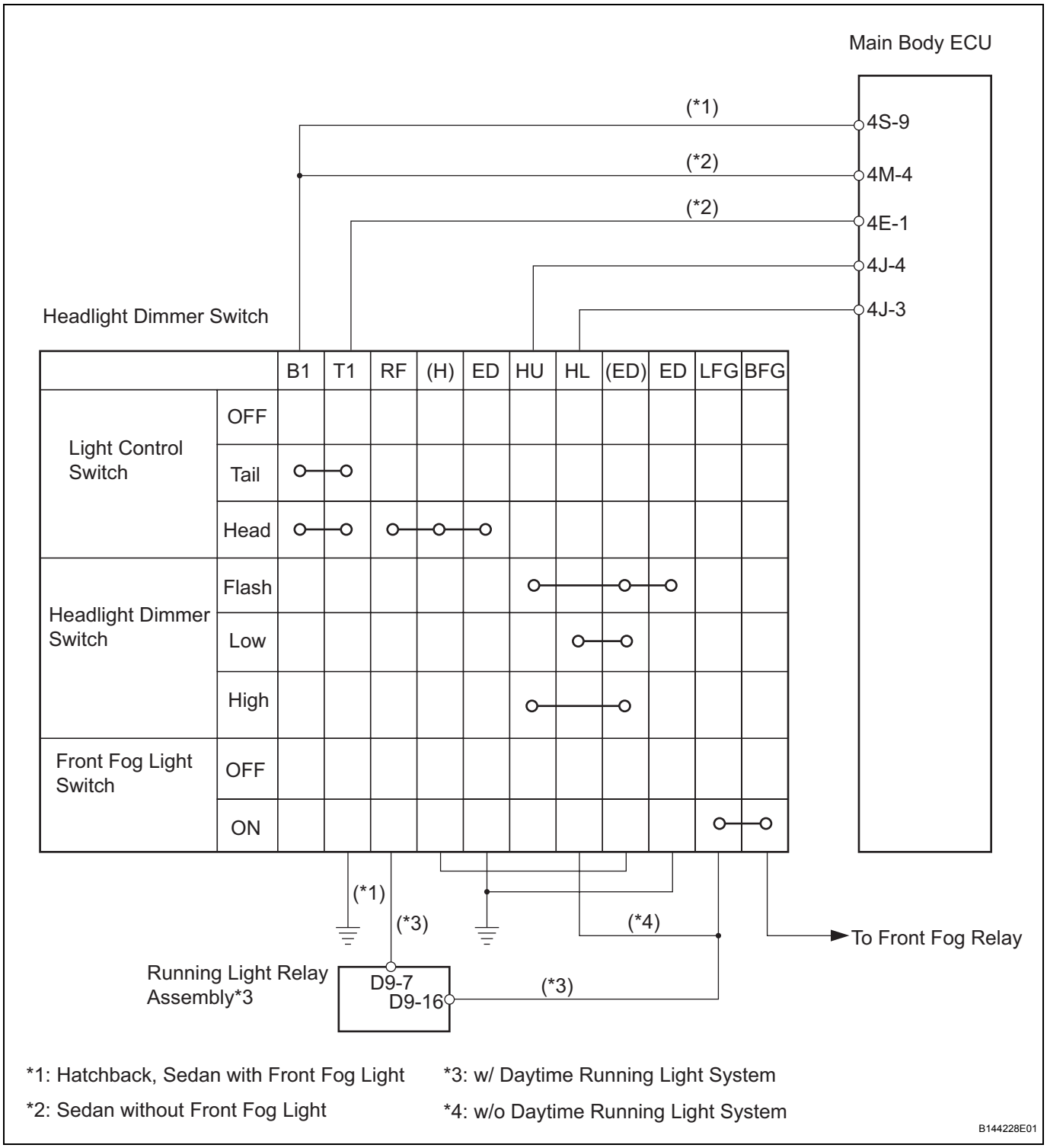

LI

INSPECTION PROCEDURE

1	**CHECK HARNESS AND CONNECTOR (HEADLIGHT DIMMER SWITCH - MAIN BODY ECU, RUNNING LIGHT RELAY)**

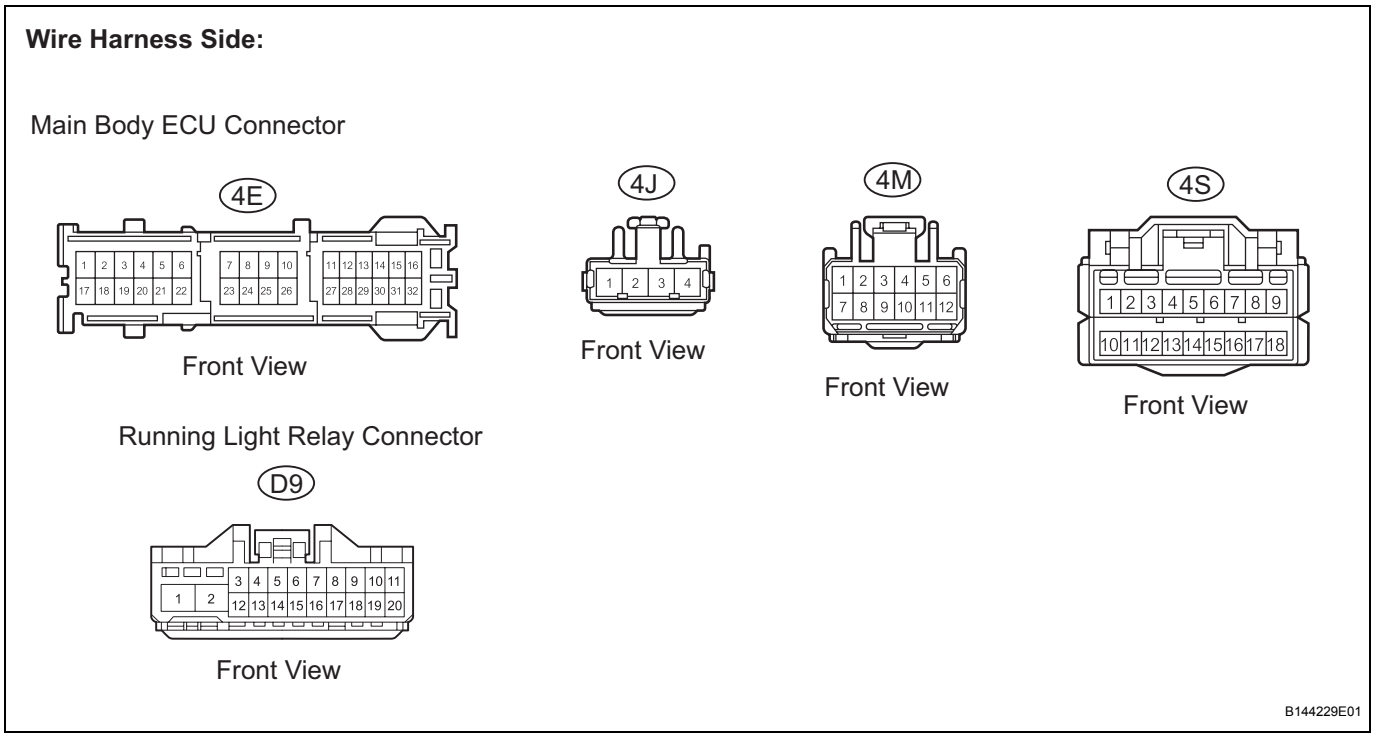

(a) Disconnect the 4J and 4S main body ECU connectors.*1
(b) Disconnect the 4J , 4E and 4M main body ECU connectors.*2
(c) Disconnect the D9 running light relay assembly connector.*3
HINT:
*1: Hatchback, Sedan with front fog light
*2: Sedan without front fog light
*3: w/ Daytime running light system
(d) Measure the resistance.

Standard resistance

Tester connection	Condition	Specified Condition
4J-3 - Body ground	Light control switch OFF → HEAD Headlight dimmer switch LOW position	10 kΩ or higher → Below 1 Ω
4J-4 - Body ground	Light control switch OFF → HEAD Headlight dimmer switch HIGH position	10 kΩ or higher → Below 1 Ω
4J-4 - Body ground	Light control switch HIGH position	10 kΩ or higher → Below 1 Ω
4S-9 - Body ground*1	Light control switch OFF → TAIL	10 kΩ or higher → Below 1 Ω
4S-9 - Body ground*1	Light control switch OFF → HEAD	10 kΩ or higher → Below 1 Ω
4E-10 - 4M-4*2	Light control switch OFF → TAIL	10 kΩ or higher → Below 1 Ω
4E-10 - 4M-4*2	Light control switch OFF → HEAD	10 kΩ or higher → Below 1 Ω
4M-9 - Body ground*2	Front fog light switch OFF → ON	10 kΩ or higher → Below 1 Ω
D9-7 - Body ground*3	Light control switch OFF → HEAD	10 kΩ or higher → Below 1 Ω

HINT:
*1: Hatchback, Sedan with front fog light
*2: Sedan without front fog light

*3: w/ Daytime running light system

(e) Reconnect the main body ECU connectors.

(f) Reconnect the running light relay assembly connector*.

HINT:

*: w/ Daytime running light system

NG → **Go to step 2**

OK

PROCEED TO NEXT CIRCUIT INSPECTION SHOWN IN PROBLEM SYMPTOMS TABLE

2 INSPECT HEADLIGHT DIMMER SWITCH

Component Side:

Headlight Dimmer Switch

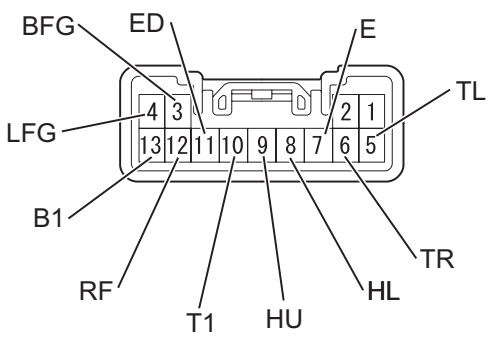

E123011E01

(a) Inspect the light control switch.

(1) Measure the resistance.

Standard resistance

Tester Connection	Condition	Specified Condition
10 (T1) - 13 (B1)	TAIL	Below 1 Ω
10 (T1) - 13 (B1)	OFF	10 kΩ or higher
10 (T1) - 13 (B1)	HEAD	Below 1 Ω
10 (T1)- 13 (B1)	OFF	10 kΩ or higher
11 (ED)- 12 (RF)	HEAD	Below 1 Ω
11 (ED)- 12 (RF)	OFF	10 kΩ or higher

(b) Inspect the headlight dimmer switch.

(1) Measure the resistance.

Standard resistance

Tester Connection	Condition	Specified Condition
9 (HU) - 11 (ED)	FLASH	Below 1 Ω
8 (HL) - 11 (ED)	LOW BEAM	Below 1 Ω
9 (HU) - 11 (ED)	HI BEAM	Below 1 Ω

(c) Inspect the turn signal switch.

(1) Measure the resistance.

Standard resistance

Tester Connection	Condition	Specified Condition
6 (TR) - 7 (E)	Right	Below 1 Ω
6 (TR) - 7 (E)	Neutral	10 kΩ or higher
5 (TL) - 7 (E)	Left	Below 1 Ω
5 (TL) - 7 (E)	Neutral	10 kΩ or higher

(d) Inspect the front fog light switch.

(1) Measure the resistance.

Standard resistance

Tester Connection	Condition	Specified Condition
3 (BFG) - 4 (LFG)	Front fog light switch ON	Below 1 Ω
3 (BFG)- 4 (LFG)	Front fog light switch OFF	10 kΩ or higher

NG → **REPLACE HEADLIGHT DIMMER SWITCH**

OK

REPAIR OR REPLACE HARNESS OR CONNECTOR

Headlight Signal Circuit

DESCRIPTION

The headlights are illuminated when the light control switch, located on the headlight dimmer switch, is turned to the HEAD position.
For models with the H-LP/AMT relay (sedan models equipped with the daytime running light system and all hatchback models), refer to Headlight Relay Circuit (See page LI-28).

WIRING DIAGRAM

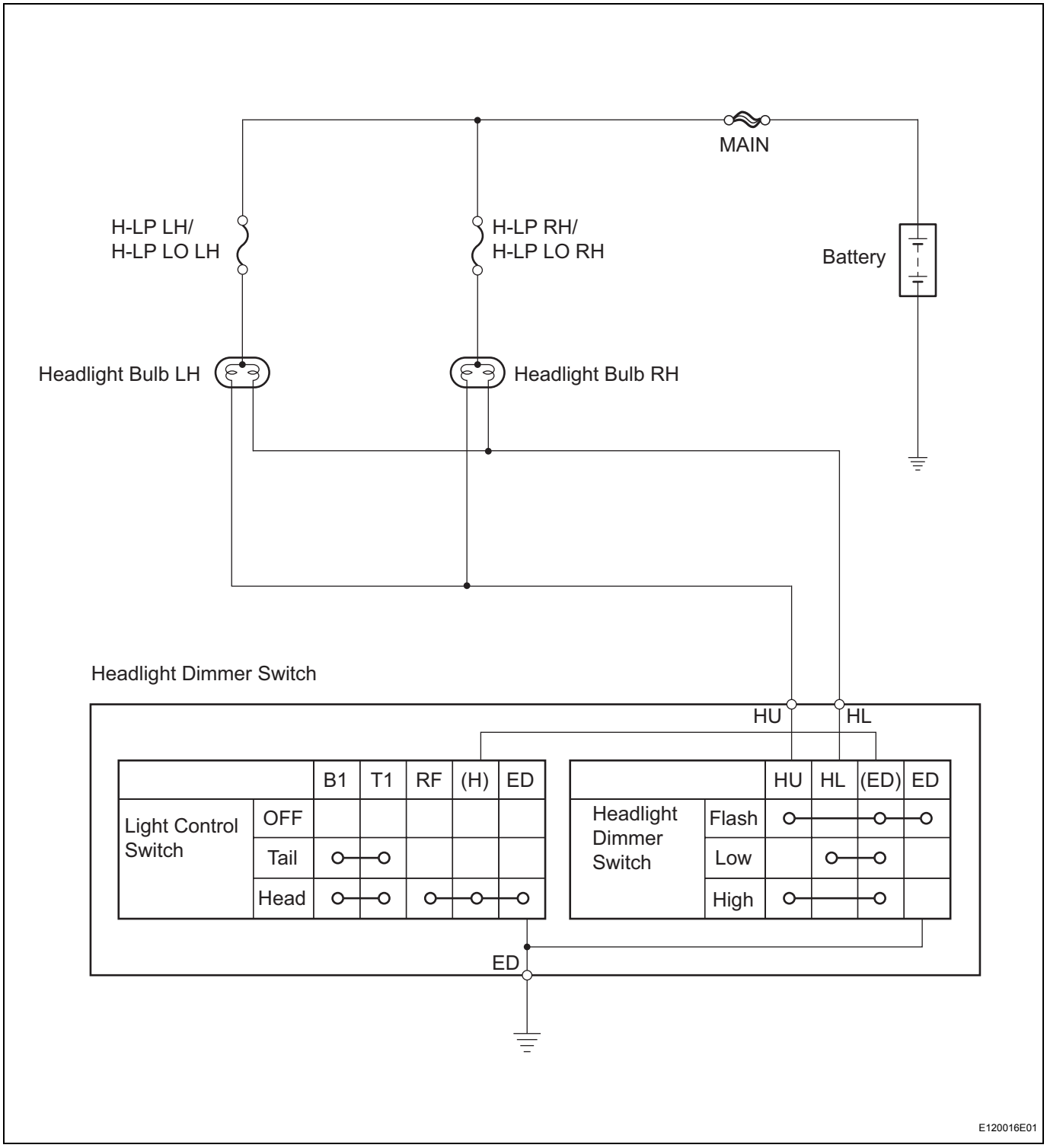

INSPECTION PROCEDURE

1	INSPECT FUSE (H-LP RH/H-LP LO RH, H-LP LH/H-LP LO LH)

(a) Remove the H-LP RH/H-LP LO RH and H-LP LH/H-LP LO LH fuses from the engine room relay block.
(b) Measure the resistance.
Standard resistance:
Below 1 Ω
(c) Reinstall the H-LP RH/H-LP LO RH and H-LP LH/H-LP LO LH fuses.

NG → **REPLACE FUSE**

LI

OK

2	INSPECT BULB (HEADLIGHT BULB)

Component Side:

Headlight Bulb*

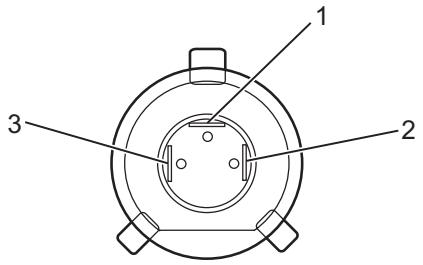

*: LH or RH

B129953E01

(a) Disconnect the B4 and B6 headlight connectors.
(b) Apply battery voltage to the terminals and check that the headlight illuminates.
Standard

Measurement Condition	Standard
Positive battery - Terminal 1 Negative battery - Terminal 3	Headlight illuminates (HI-Beam)
Positive battery - Terminal 2 Negative battery - Terminal 3	Headlight illuminates (LO-Beam)

(c) Reconnect the headlight connectors.

NG → **REPLACE BULB**

OK

3 CHECK HARNESS AND CONNECTOR (FUSE - HEADLIGHT)

Wire Harness Side:

Headlight Bulb Connector

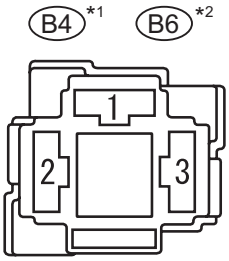

*1: RH

*2: LH

B125793E04

(a) Disconnect the B4 and B6 headlight bulb connectors.
(b) Measure the voltage.
Standard voltage

Tester Connection	Condition	Specified Condition
B4-3 - Body ground	Always	11 to 14 V
B6-3 - Body ground	Always	11 to 14 V

(c) Reconnect the headlight bulb connectors.

NG → **REPAIR OR REPLACE HARNESS OR CONNECTOR**

OK

4 INSPECT HEADLIGHT DIMMER SWITCH

Component Side:

Headlight Dimmer Switch

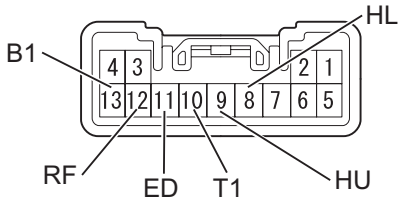

E123010E02

(a) Remove the headlight dimmer switch.
(b) Inspect the light control switch.
(1) Measure the resistance.
Standard resistance

Tester Connection	Condition	Specified Condition
10 (T1) - 13 (B1)	TAIL	Below 1 Ω
10 (T1) - 13 (B1)	HEAD	Below 1 Ω
10 (T1) - 13 (B1)	OFF	10 kΩ or higher
11 (ED) - 12 (RF)	HEAD	Below 1 Ω
11 (ED) - 12 (RF)	OFF	10 kΩ or higher

(c) Inspect the headlight dimmer switch.
(1) Measure the resistance.
Standard resistance

Tester Connection	Condition	Specified Condition
9 (HU) - 11 (ED)	FLASH	Below 1 Ω
8 (HL) - 11 (ED)	LOW BEAM	Below 1 Ω
9 (HU) - 11 (ED)	HI BEAM	Below 1 Ω

(d) Reinstall the headlight dimmer switch.

NG → **REPLACE HEADLIGHT DIMMER SWITCH**

OK

5	CHECK HARNESS AND CONNECTOR (HEADLIGHT - HEADLIGHT DIMMER SWITCH)

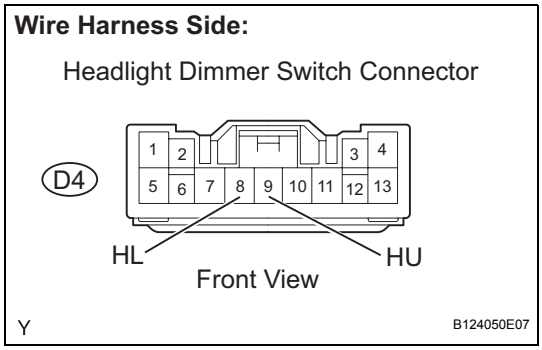

(a) Disconnect the D4 headlight dimmer switch connector.
(b) Measure the voltage.
Standard voltage

Tester Connection	Condition	Specified Condition
D4-8 (HL) - Body ground	Always	11 to 14 V
D4-9 (HU) - Body ground	Always	11 to 14 V

(c) Reconnect the headlight dimmer switch connector.

NG → **REPAIR OR REPLACE HARNESS OR CONNECTOR**

LI

OK

REPAIR OR REPLACE HARNESS OR CONNECTOR (HEADLIGHT DIMMER SWITCH - BODY GROUND)

Illumination Circuit

DESCRIPTION

The main body ECU receives information regarding the door courtesy switch and door lock position switch, and turns on the room light assembly.

WIRING DIAGRAM

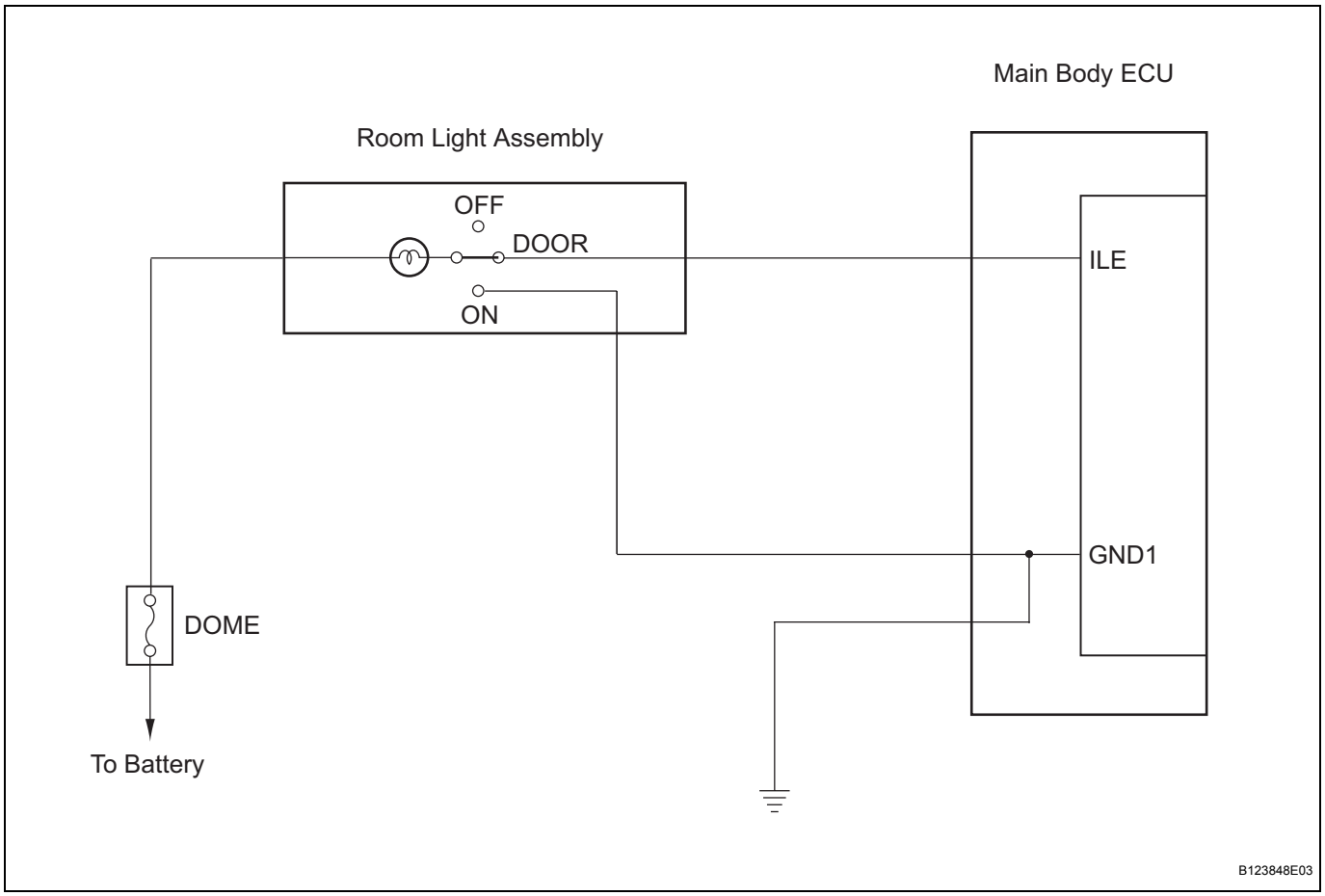

INSPECTION PROCEDURE

1	INSPECT FUSE (DOME)

(a) Remove the DOME fuse from the engine room relay block.
(b) Measure the resistance.
Standard resistance:
Below 1 Ω
(c) Reinstall the DOME fuse.

NG → **REPLACE FUSE**

OK

2 INSPECT ROOM LIGHT ASSEMBLY

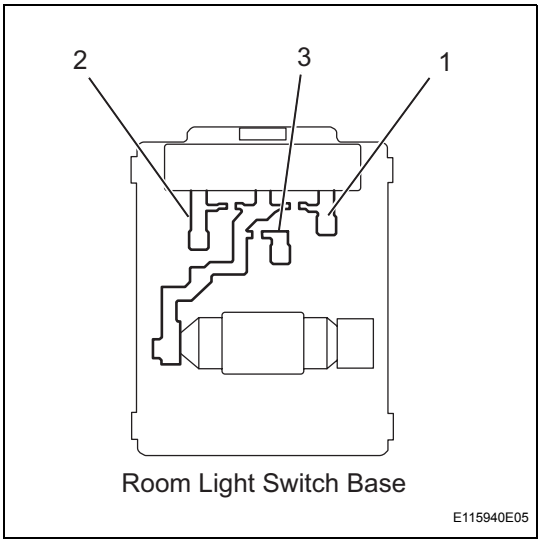

(a) Inspect the room light assembly.
  (1) Remove the room light assembly.
  (2) Measure the resistance.
  Standard resistance

Tester Connection	Switch Operation	Specified Condition
1 - 2 1 - 3	OFF	10 kΩor higher
1 - 2	DOOR	Below 1Ω
1 - 3	ON	Below 1Ω

  (3) Connect the positive (+) lead from the battery to terminal 1 and the negative (-) lead to terminal 2, then check that the light comes on when the switch is in the DOOR position.
  OK:
  Light comes on.
  (4) Connect the positive (+) lead from the battery to terminal 1 and the negative (-) lead to terminal 3, then check that the light comes on when the switch is in the ON position.
  OK:
  Light comes on.
  (5) Reinstall the room light assembly.

NG → **REPLACE ROOM LIGHT ASSEMBLY**

OK

3 CHECK HARNESS AND CONNECTOR (BATTERY - ROOM LIGHT ASSEMBLY AND MAIN BODY ECU)

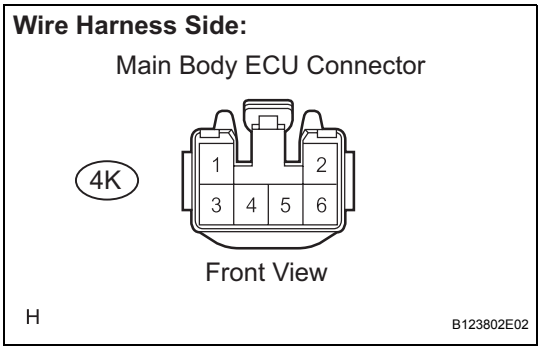

(a) Disconnect the 4K main body ECU connector.
(b) Measure the voltage.
Standard voltage

Tester Connection	Condition	Specified Condition
4K-2 (ILE) - Body ground	Room light switch in DOOR position	11 to 14 V
4K-1 (GND1)- Body ground	Room light switch in ON position	11 to 14 V

(c) Reconnect the main body ECU connector.

NG → **REPAIR OR REPLACE HARNESS OR CONNECTOR**

OK

PROCEED TO NEXT CIRCUIT INSPECTION SHOWN IN PROBLEM SYMPTOMS TABLE

HEADLIGHT ASSEMBLY (for Sedan)

COMPONENTS

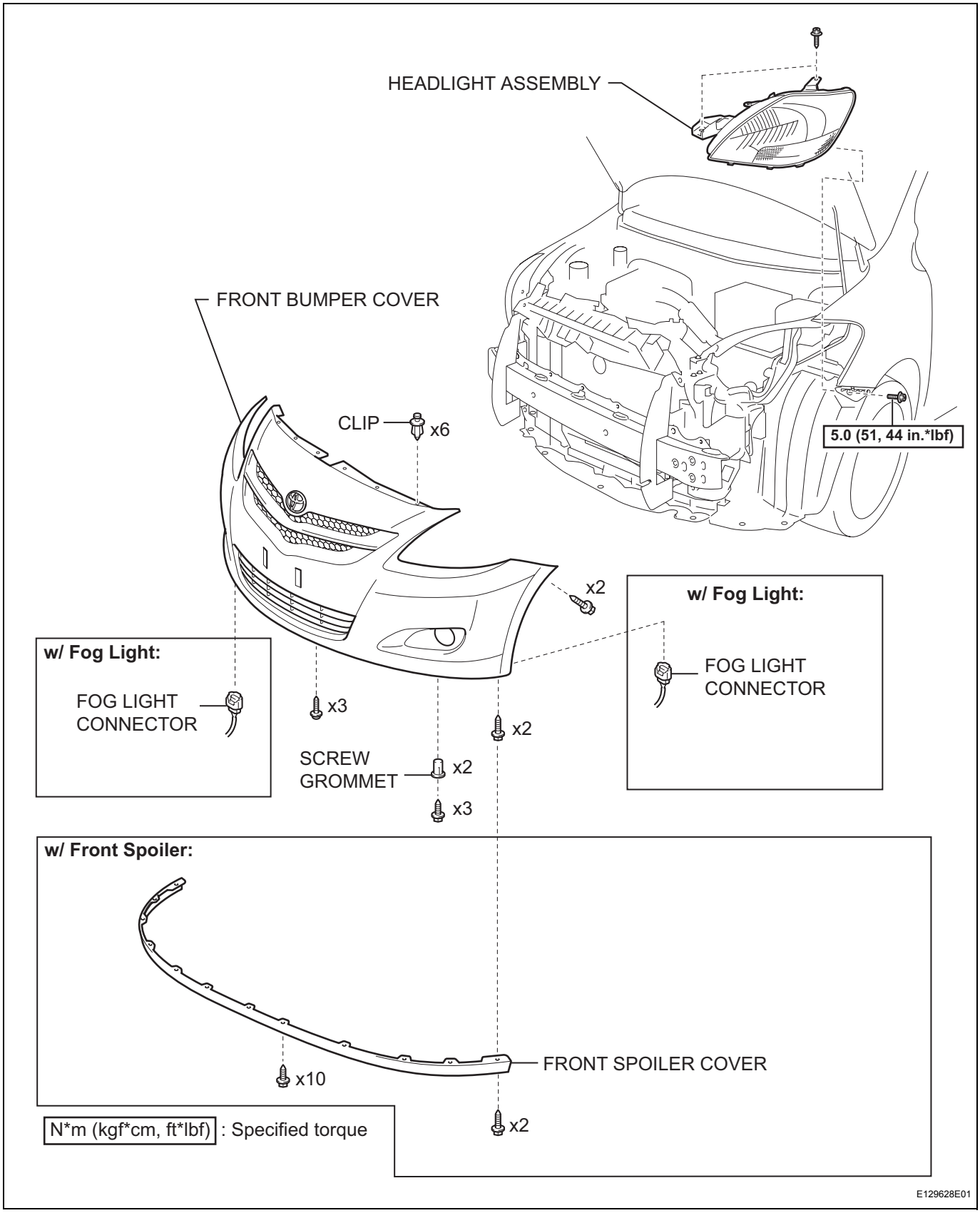

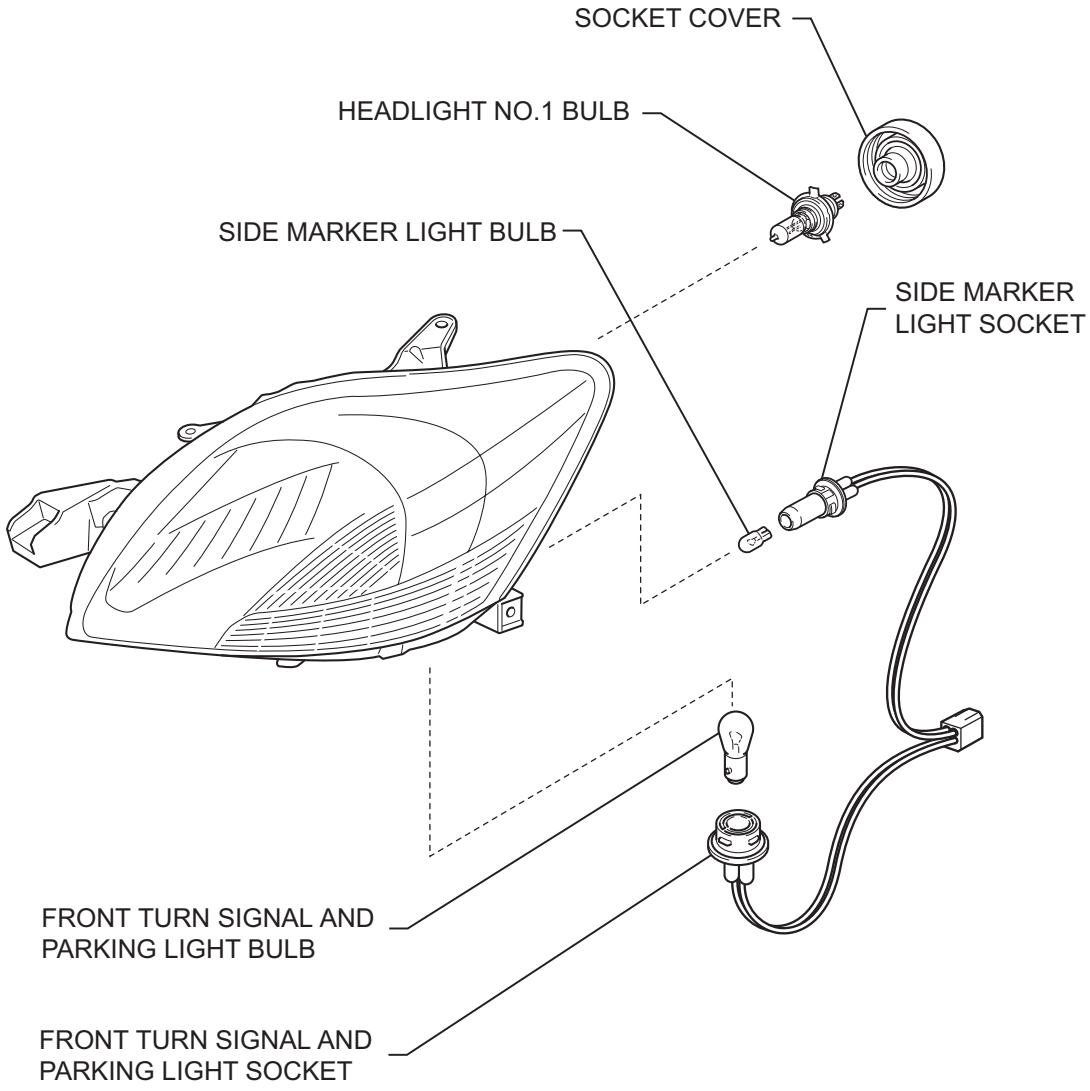

BRACKET FOR REPAIR:

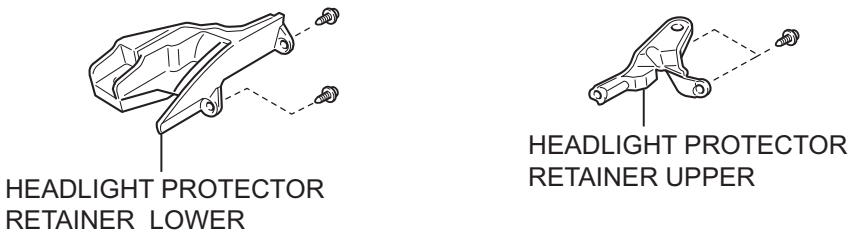

Y

E129629E01

REMOVAL

HINT:
- Use the same procedure for both the RH and LH sides.
- The procedure described below is for the LH side.
- Set the headlight leveling switch to 0 (zero) before conducting the procedure.

1. DISCONNECT CABLE FROM NEGATIVE BATTERY TERMINAL

2. REMOVE FRONT SPOILER COVER (w/ Front Spoiler) (See page ET-6)

3. REMOVE FRONT BUMPER COVER (See page ET-6)

4. REMOVE HEADLIGHT ASSEMBLY

(a) Remove the 2 screws and the bolt.

(b) Disconnect the 2 connectors, then remove the headlight.

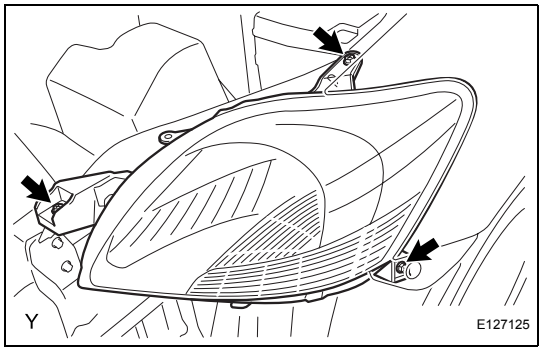

DISASSEMBLY

1. REMOVE HEADLIGHT NO.1 BULB

(a) Remove the socket cover.

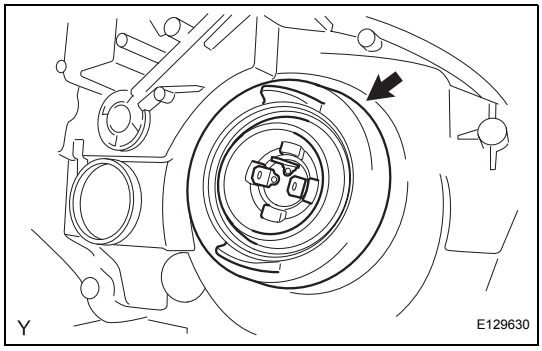

(b) Push the set spring, and pull it in the directions indicated by the arrow in the illustration, to disengage it.

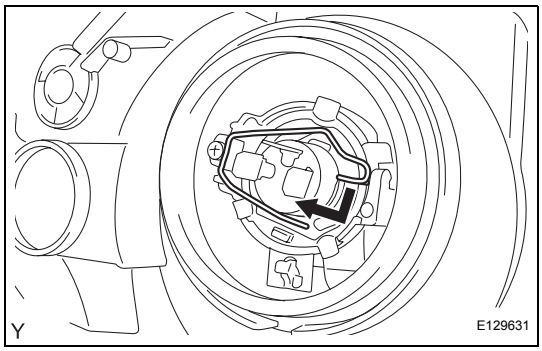

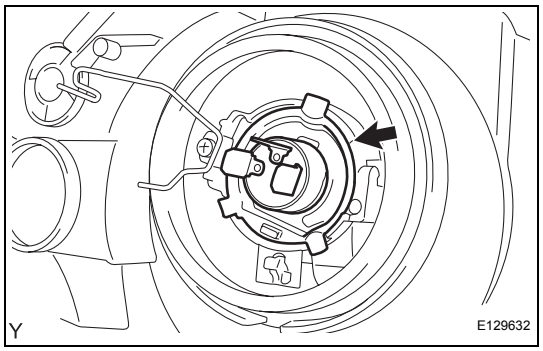

(c) Remove the headlight No. 1 bulb.
NOTICE:
Do not touch the bulb glass with your fingers.

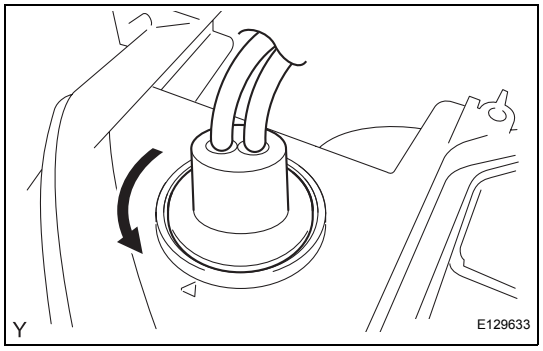

2. REMOVE FRONT TURN SIGNAL AND PARKING LIGHT BULB

(a) Turn the front turn signal and parking light socket and bulb, in the direction indicated by the arrow in the illustration, to remove them.

(b) Remove the front turn signal and parking light bulb from the light socket.

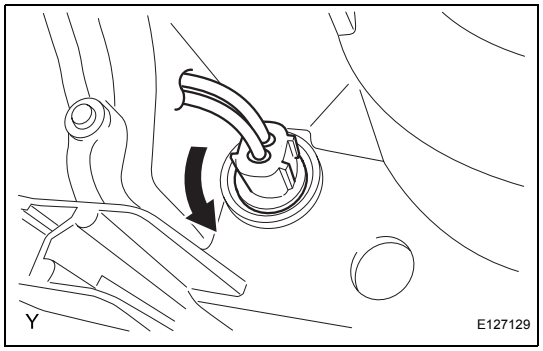

3. REMOVE SIDE MARKER LIGHT BULB

(a) Turn the side marker light socket and bulb, in the direction indicated by the arrow in the illustration, to remove them.

(b) Remove the side marker light bulb from the light socket.

ADJUSTMENT

1. PREPARE VEHICLE FOR HEADLIGHT AIMING ADJUSTMENT

(a) Prepare the vehicle:
- Ensure that there is no damage or deformation of the body around the headlights.
- Fill the fuel tank.
- Fill the oil to the specified level.
- Fill the coolant to the specified level.
- Inflate the tires to the appropriate pressure.
- Place the spare tire, tools and jack in their original positions.
- Unload the trunk.
- Sit a person of average weight (68 kg, 150 lb) in the driver seat.

2. PREPARE FOR HEADLIGHT AIMING (for Using a Tester)

(a) Prepare the vehicle for headlight aim check.

(b) Adjust in accordance with headlight tester instructions.

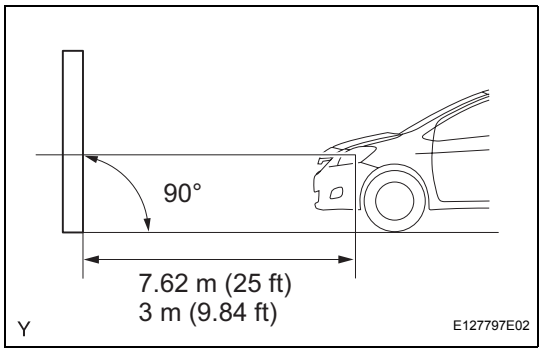

3. PREPARE FOR HEADLIGHT AIMING (for Using a Screen)

(a) Prepare the following vehicle conditions:
- Place the vehicle in a location that is dark enough to clearly observe the cutoff line. The cutoff line is a distinct line, below which light from the headlights can be observed and above which it cannot.
- Place the vehicle at a 90° angle to the wall.
- Keep a 7.62 m (25 ft) distance between the center of the headlight bulb and the wall.
- Place the vehicle on a level surface.
- Bounce the vehicle up and down to settle the suspension.

  NOTICE:
  A distance of 7.62 m (25 ft) between the vehicle (the center of the headlight bulb) and the wall is necessary for proper aim adjustment. If unable to secure a distance of 7.62 m (25 ft), set a distance of exactly 3 m (9.84 ft) to check and adjust the headlight aim. (Since the target zone changes depending on the distance, follow the instructions shown in the illustration.)

(b) Prepare a piece of thick white paper (approximately 2 m (6.6 ft) high x 4 m (13.1 ft) wide) to use as a screen.

(c) Draw a vertical line down the center of the screen (V line).

(d) Set the screen, as shown in the illustration.

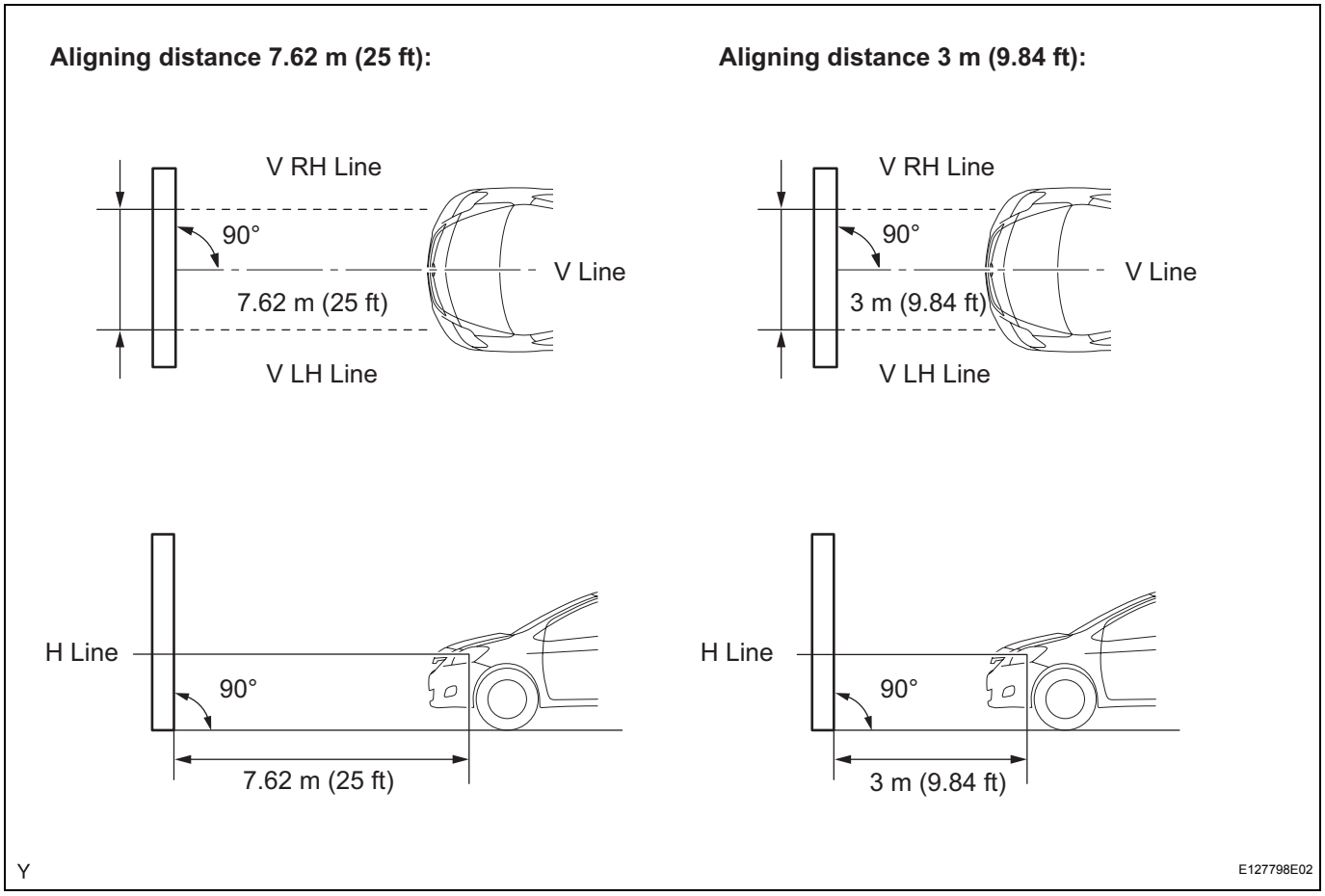

HINT:
- Stand the screen perpendicular to the ground.
- Align the V line on the screen with the center of the vehicle.

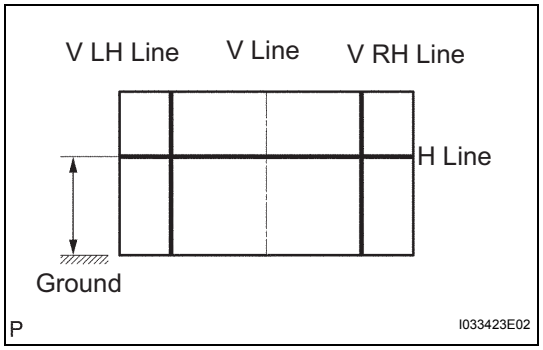

(e) Draw base lines (H line, V LH and V RH lines) on the screen, as shown in the illustration.
HINT:
- The base lines differ for "low-beam inspection" and "high-beam inspection".
- Mark the headlight bulb center marks on the screen. If the center mark cannot be observed on the headlight, use the center of the headlight bulb.

(1) H Line (Headlight height):
Draw a horizontal line across the screen so that it passes through the center marks. The H line should be at the same height as the headlight bulb center marks of the low-beam headlights.

(2) V LH Line and V RH Line (Center mark positions of left-hand (LH) and right-hand (RH) headlights):
Draw two vertical lines so that they intersect the H line at each center mark (aligned with the center of the low-beam headlight bulbs).

LI

4. INSPECT HEADLIGHT AIMING

(a) Cover the headlight on the opposite side or disconnect its connector, to prevent light from the headlight not being inspected from affecting the headlight aiming inspection.

NOTICE:

Do not keep the headlight covered for more than 3 minutes. The headlight lens is made of synthetic resin, and may easily melt or be damaged due to heat.

(b) Start the engine.

NOTICE:

Engine rpm must be 1,500 or more.

(c) Turn on the headlight and make sure that the cutoff line falls within the specified area, as shown in the illustration.

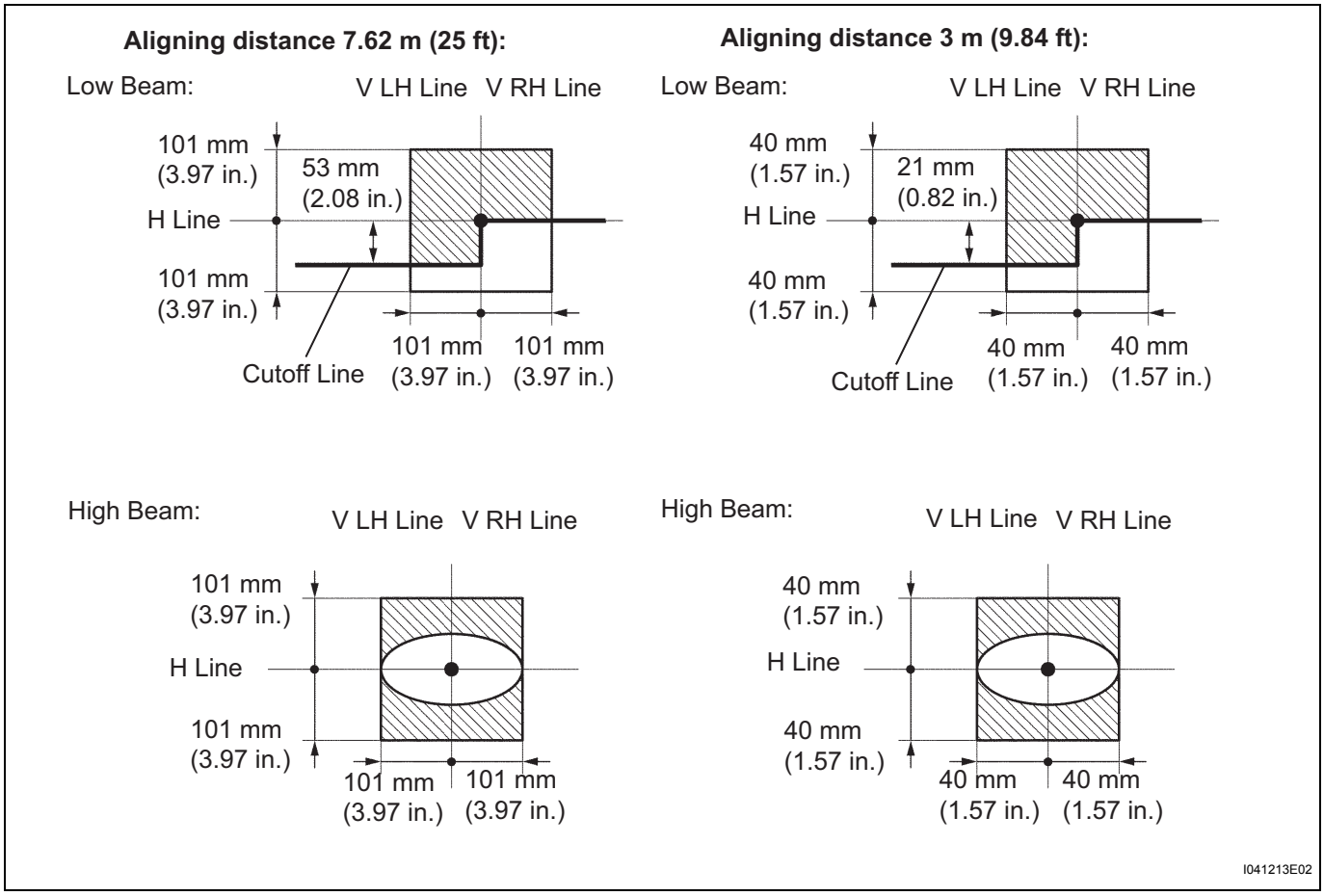

HINT:

- Since the low-beam light and the high-beam light are a unit, if the aim on one is correct, the other should also be correct. However, check both beams just to make sure.
- Alignment distance is 7.62 m (25 ft):
  The cutoff line is 101 mm (3.97 in.) above and below the H line as well as to the left and right of the V line with low-beam (SAE J599).

- Alignment distance is 3 m (9.84 ft):
  The cutoff line is 40 mm (1.57 in.) above and below the H line as well as to the left and right of the V line with low-beam (SAE J599).
- Alignment distance is 7.62 m (25 ft):
  The cutoff line is 101 mm (3.97 in.) above and below the H line as well as to the left and right of the V line with high-beam (SAE J599).
- Alignment distance is 3 m (9.84 ft):
  The cutoff line is 40 mm (1.57 in.) above and below the H line as well as to the left and right of the V line with high-beam (SAE J599).
- Alignment distance is 7.62 m (25 ft):
  The cutoff line is 53 mm (2.08 in.) below the H line with low-beam.
- Alignment distance is 3 m (9.84 ft):
  The cutoff line is 21 mm (0.82 in.) below the H line with low-beam.

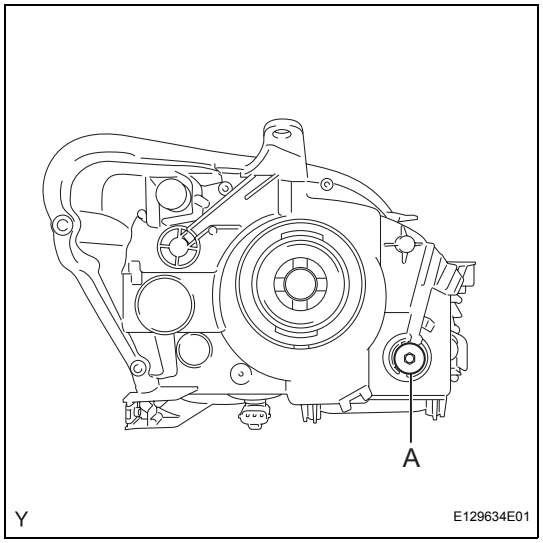

5. ADJUST HEADLIGHT AIMING

(a) Adjust the aiming vertically:
Adjust the headlight aim to within the specified range by turning aiming screw A with a screwdriver.
NOTICE:
The final turn of the aiming screw should be made in the clockwise direction. If the screw is tightened excessively, loosen it and then retighten it, so that the final turn of the screw is in the clockwise direction.

(b) Perform low-beam aim adjustment.
HINT:
The headlight aim moves down when the aiming screw is turned clockwise, and moves up when the aiming screw is turned counterclockwise.

REASSEMBLY

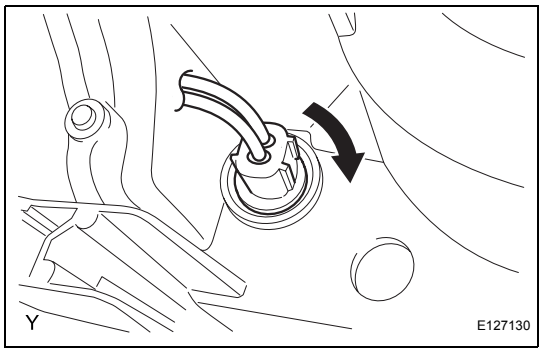

1. INSTALL SIDE MARKER LIGHT BULB

(a) Install the side marker light bulb into the light socket.

(b) Turn the side marker light bulb socket and bulb, in the direction indicated by the arrow in the illustration, to install them.

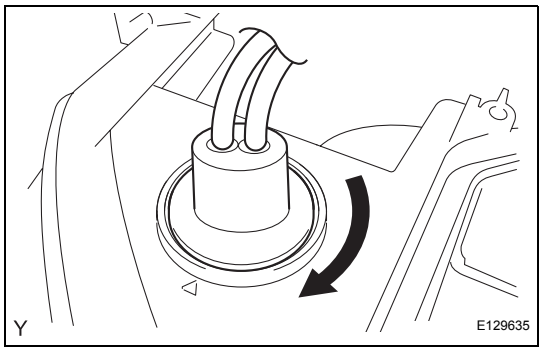

2. INSTALL FRONT TURN SIGNAL AND PARKING LIGHT BULB

(a) Install the front turn signal and parking light bulb into the light socket.

(b) Turn the front turn signal and parking light bulb socket and bulb, in the direction indicated by the arrow in the illustration, to install them.

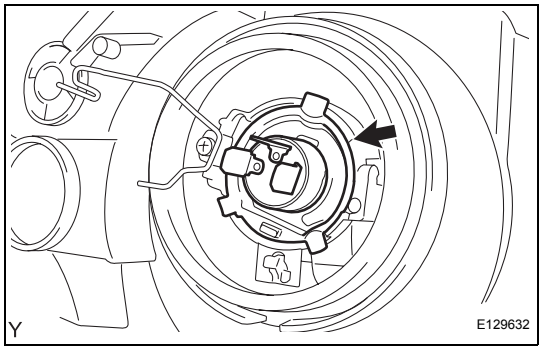

3. INSTALL HEADLIGHT NO.1 BULB

(a) Install the headlight No. 1 bulb.

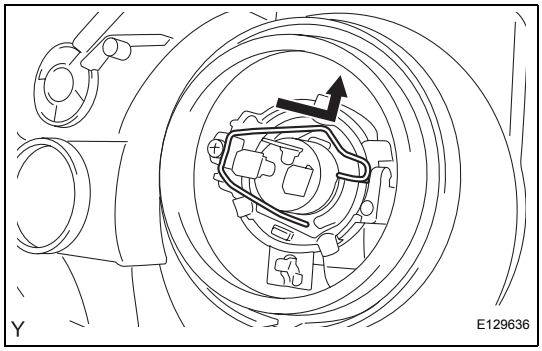

(b) Lock the set spring by moving it in the directions indicated by the arrow in the illustration.

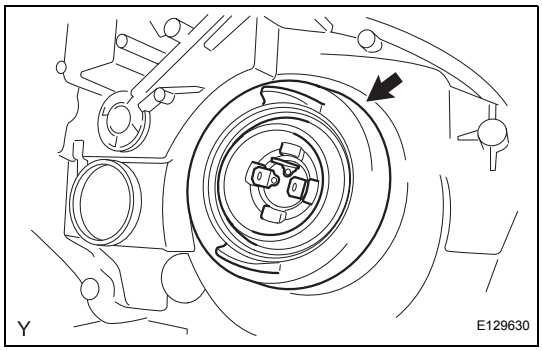

(c) Install the socket cover.

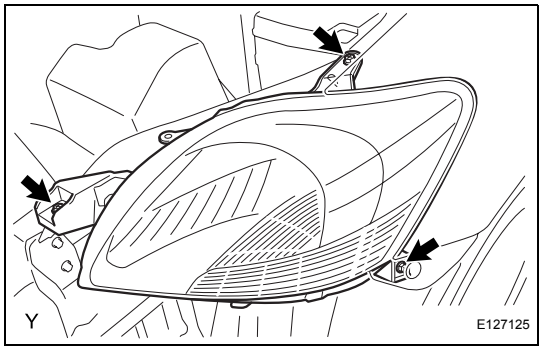

INSTALLATION

1. INSTALL HEADLIGHT ASSEMBLY

(a) Connect the 2 connectors.

(b) Install the headlight with the 2 screws and the bolt.
Torque: 5.0 N*m (51 kgf*cm, 44 in.*lbf)
(for bolt)

2. INSTALL FRONT BUMPER COVER (See page ET-16)

3. INSTALL FRONT SPOILER COVER (w/ Front Spoiler) (See page ET-19)

4. **CONNECT CABLE TO NEGATIVE BATTERY TERMINAL**
   Torque: 5.4 N*m (55 kgf*cm, 48 in.*lbf)
5. **PREPARE VEHICLE FOR HEADLIGHT AIMING ADJUSTMENT (See page LI-87)**
6. **PREPARE FOR HEADLIGHT AIMING (for Using a Screen) (See page LI-88)**
7. **INSPECT HEADLIGHT AIMING (See page LI-90)**
8. **ADJUST HEADLIGHT AIMING (See page LI-91)**

REPAIR

HINT:
- Use the same procedure for both the RH and LH sides.
- The procedure described below is for the LH side.
- If only the installation area of the headlight is damaged, the repairs described below can be performed inexpensively by using bracket for the repair. This may only be done if other areas of the headlight are not damaged.

1. DISCONNECT CABLE FROM NEGATIVE BATTERY TERMINAL

2. REMOVE FRONT SPOILER COVER (w/ Front Spoiler) (See page ET-6)

3. REMOVE FRONT BUMPER COVER (See page ET-6)

4. REMOVE HEADLIGHT ASSEMBLY (See page LI-86)

5. INSTALL HEADLIGHT PROTECTOR RETAINER UPPER

HINT:
- If only the installation area of the headlight is damaged, use a bracket for a low-cost repair.
- Ensure that other areas of the headlight are not damaged.

(a) Cut off the portion indicated by the hatched lines in the illustration and smooth the surface with sandpaper.

NOTICE:
After cutting off the shaded portion, place the headlight protector retainer upper against the bosses and gradually file away the shaded portion until installation is possible.

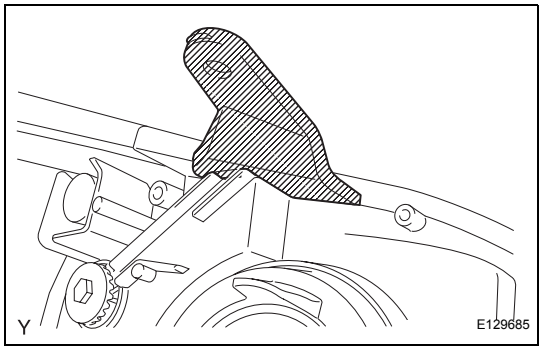

(b) Install the headlight protector retainer upper with the 2 screws.

6. INSTALL HEADLIGHT PROTECTOR RETAINER LOWER

HINT:
- If only the installation area of the headlight is damaged, use a bracket for a low-cost repair.
- Ensure that other areas of the headlight are not damaged.

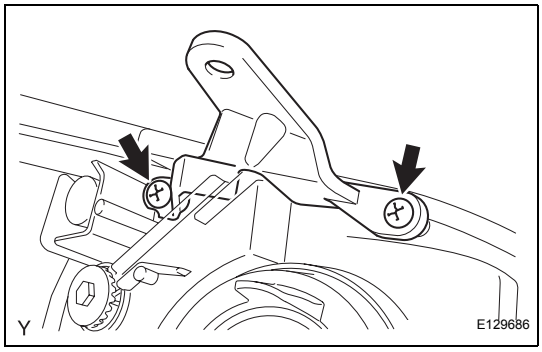

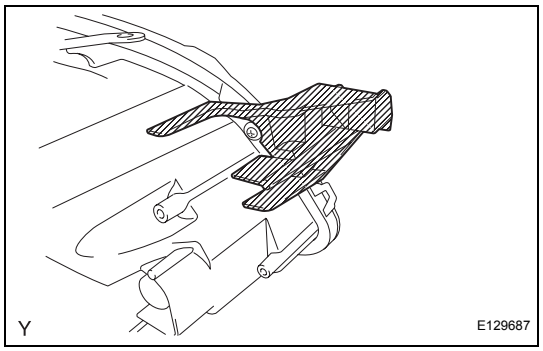

(a) Cut off the portion indicated by the hatched lines in the illustration and smooth the surface with sandpaper.
NOTICE:
After cutting off the shaded portion, place the headlight protector retainer lower against the bosses and gradually file away the shaded portion until installation is possible.

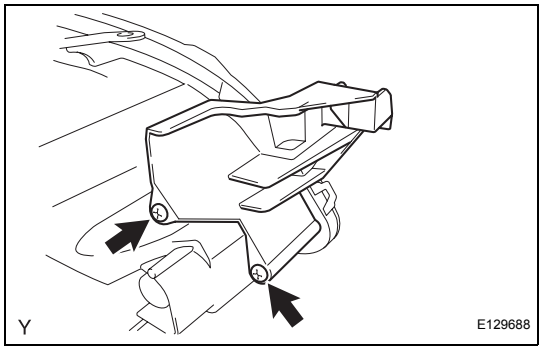

(b) Install the headlight protector retainer lower with the 2 screws.

7. **INSTALL HEADLIGHT ASSEMBLY (See page LI-92)**
8. **INSTALL FRONT BUMPER COVER (See page ET-16)**
9. **INSTALL FRONT SPOILER COVER (w/ Front Spoiler) (See page ET-19)**
10. **CONNECT CABLE TO NEGATIVE BATTERY TERMINAL**
    Torque: 5.4 N*m (55 kgf*cm, 48 in.*lbf)
11. **PREPARE VEHICLE FOR HEADLIGHT AIMING ADJUSTMENT (See page LI-87)**
12. **PREPARE FOR HEADLIGHT AIMING (for Using a Tester) (See page LI-87)**
13. **PREPARE FOR HEADLIGHT AIMING (for Using a Screen) (See page LI-88)**
14. **INSPECT HEADLIGHT AIMING (See page LI-90)**
15. **ADJUST HEADLIGHT AIMING (See page LI-91)**

HEADLIGHT ASSEMBLY (for Hatchback)

COMPONENTS

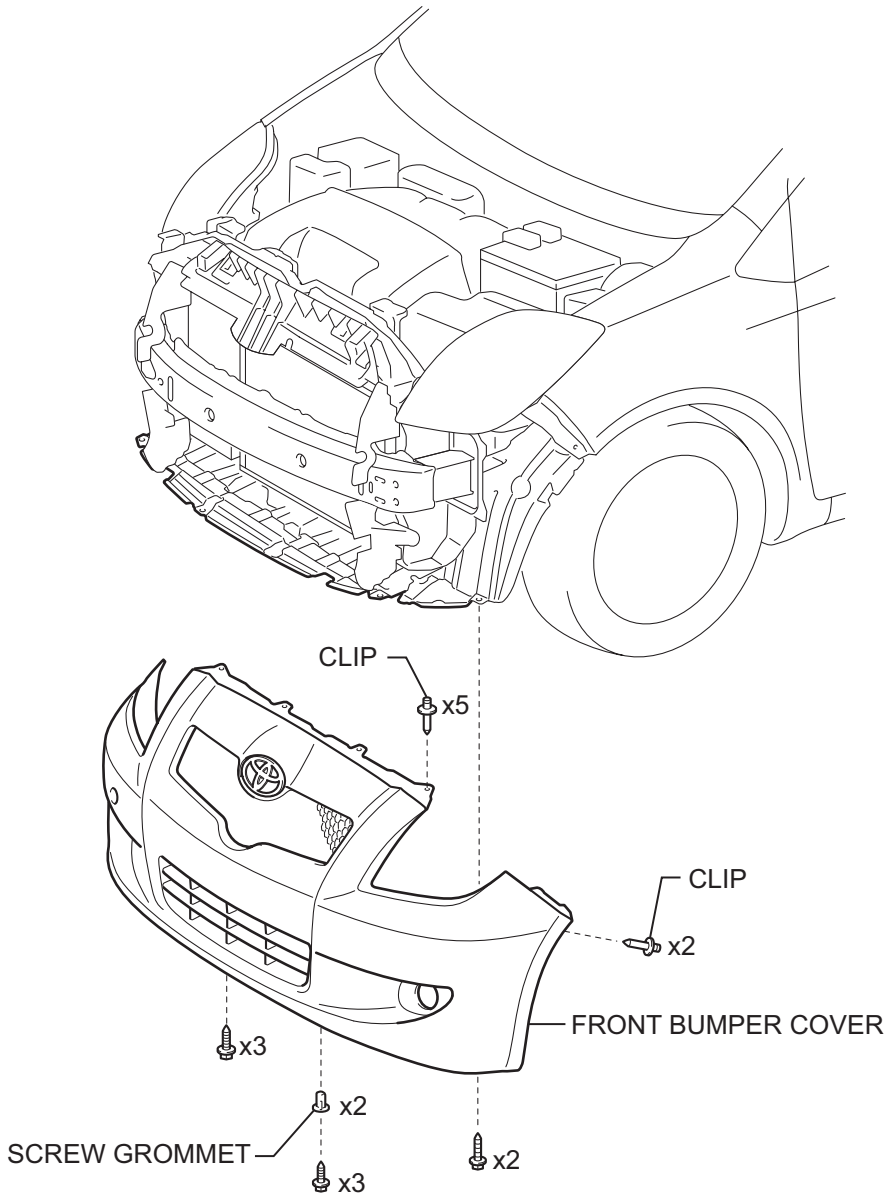

T

E117642E01

LI

FRONT TURN SIGNAL LIGHT BULB SOCKET

FRONT TURN SIGNAL LIGHT BULB

x3

SOCKET COVER

HEADLIGHT BULB

PARKING LIGHT BULB SOCKET

PARKING LIGHT BULB

CLEARANCE LIGHT BULB SOCKET

HEADLIGHT ASSEMBLY

CLEARANCE LIGHT BULB

BRACKET FOR REPAIR:

HEADLIGHT PROTECTOR RETAINER LOWER

HEADLIGHT PROTECTOR RETAINER UPPER

Y

E129692E01

REMOVAL

HINT:
- Use the same procedure for both the RH and LH sides.
- The procedure described below is for the LH side.

1. DISCONNECT CABLE FROM NEGATIVE BATTERY TERMINAL

2. REMOVE FRONT BUMPER COVER (See page ET-24)

3. REMOVE HEADLIGHT ASSEMBLY

(a) Remove the 3 screws.

(b) Disconnect the 3 connectors, then remove the headlight.

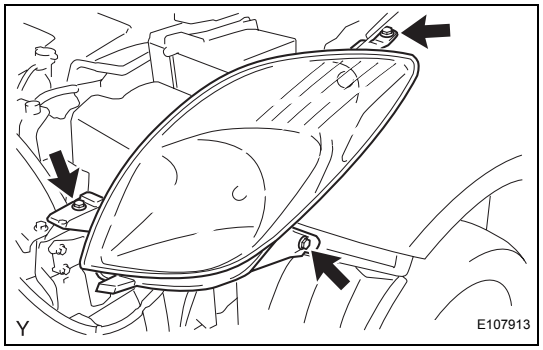

DISASSEMBLY

1. REMOVE HEADLIGHT BULB

(a) Remove the socket cover.

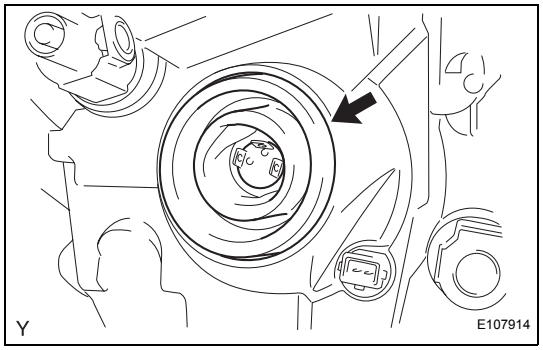

(b) Push the set spring, and pull it in the direction indicated by the arrows in the illustration, to disengage it.

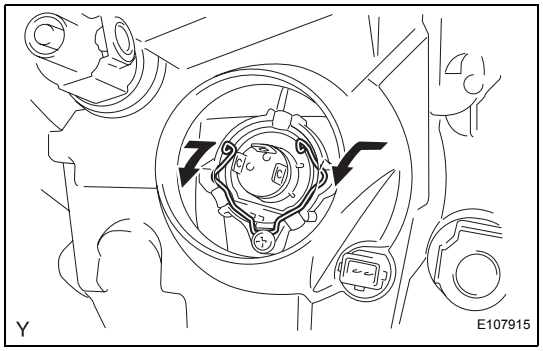

(c) Remove the headlight bulb.

NOTICE:

Do not touch the bulb glass with your fingers.

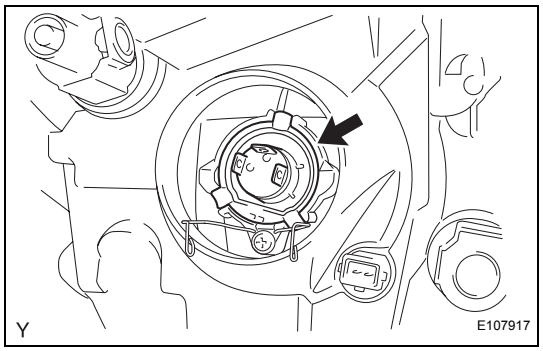

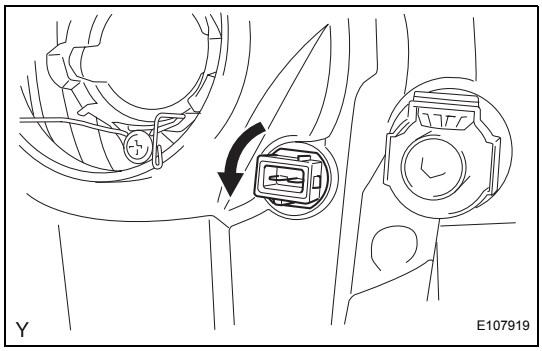

2. REMOVE CLEARANCE LIGHT BULB

(a) Turn the clearance light bulb socket and bulb, in the direction indicated by the arrow in the illustration, to remove them.

(b) Remove the clearance light bulb from the light socket.

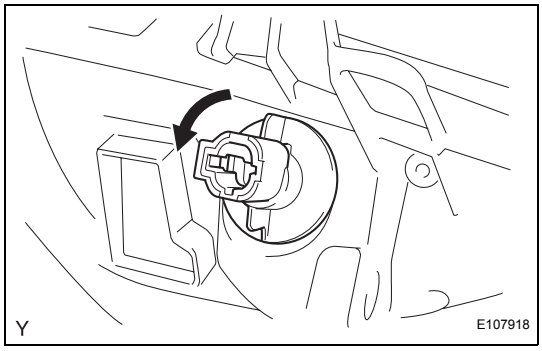

3. REMOVE FRONT TURN SIGNAL LIGHT BULB

(a) Turn the front turn signal light socket and bulb, in the direction indicated by the arrow in the illustration, to remove them.

(b) Remove the front turn signal light bulb from the light socket.

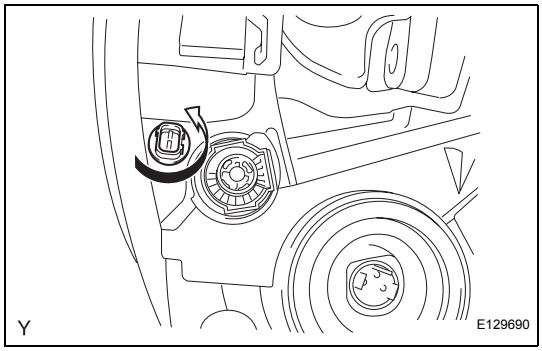

4. REMOVE PARKING LIGHT BULB

(a) Turn the parking light socket and bulb, in the direction indicated by the arrow in the illustration, to remove them.

(b) Remove the parking light bulb from the light socket.

ADJUSTMENT

1. PREPARE VEHICLE FOR HEADLIGHT AIMING ADJUSTMENT

(a) Prepare the vehicle:
- Ensure that there is no damage or deformation of the body around the headlights.
- Fill the fuel tank.
- Fill the oil to the specified level.
- Fill the coolant to the specified level.
- Inflate the tires to the appropriate pressure.
- Place the spare tire, tools and jack in their original positions.
- Unload the trunk.
- Sit a person of average weight (68 kg, 150 lb) in the driver seat.

2. PREPARE FOR HEADLIGHT AIMING (for Using a Tester)

(a) Prepare the vehicle for headlight aim check.

(b) Adjust in accordance with headlight tester instructions.

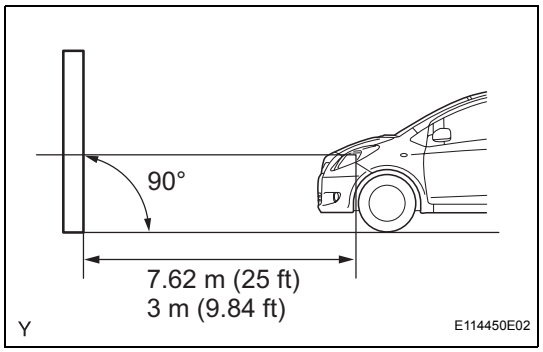

3. PREPARE FOR HEADLIGHT AIMING (for Using a Screen)

(a) Prepare the vehicle in accordance with the following conditions:
- Place the vehicle in a location that is dark enough to clearly observe the cutoff line. The cutoff line is a distinct line, below which light from the headlights can be observed and above which it cannot.
- Place the vehicle at a 90° angle to the wall.
- Keep a 7.62 m (25 ft) distance between the center of the headlight bulb and the wall.
- Place the vehicle on a level surface.
- Bounce the vehicle up and down to settle the suspension.

  NOTICE:
  A distance of 7.62 m (25 ft) between the vehicle (the center of the headlight bulb) and the wall is necessary for proper aim adjustment. If unable to secure a distance of 7.62 m (25 ft), set a distance of exactly 3 m (9.84 ft) to check and adjust the headlight aim. (Since the target zone changes depending on the distance, follow the instructions shown in the illustration.)

(b) Prepare a piece of thick white paper (approximately 2 m (6.6 ft) high x 4 m (13.1 ft) wide) to use as a screen.

(c) Draw a vertical line down the center of the screen (V line).

(d) Set the screen, as shown in the illustration.

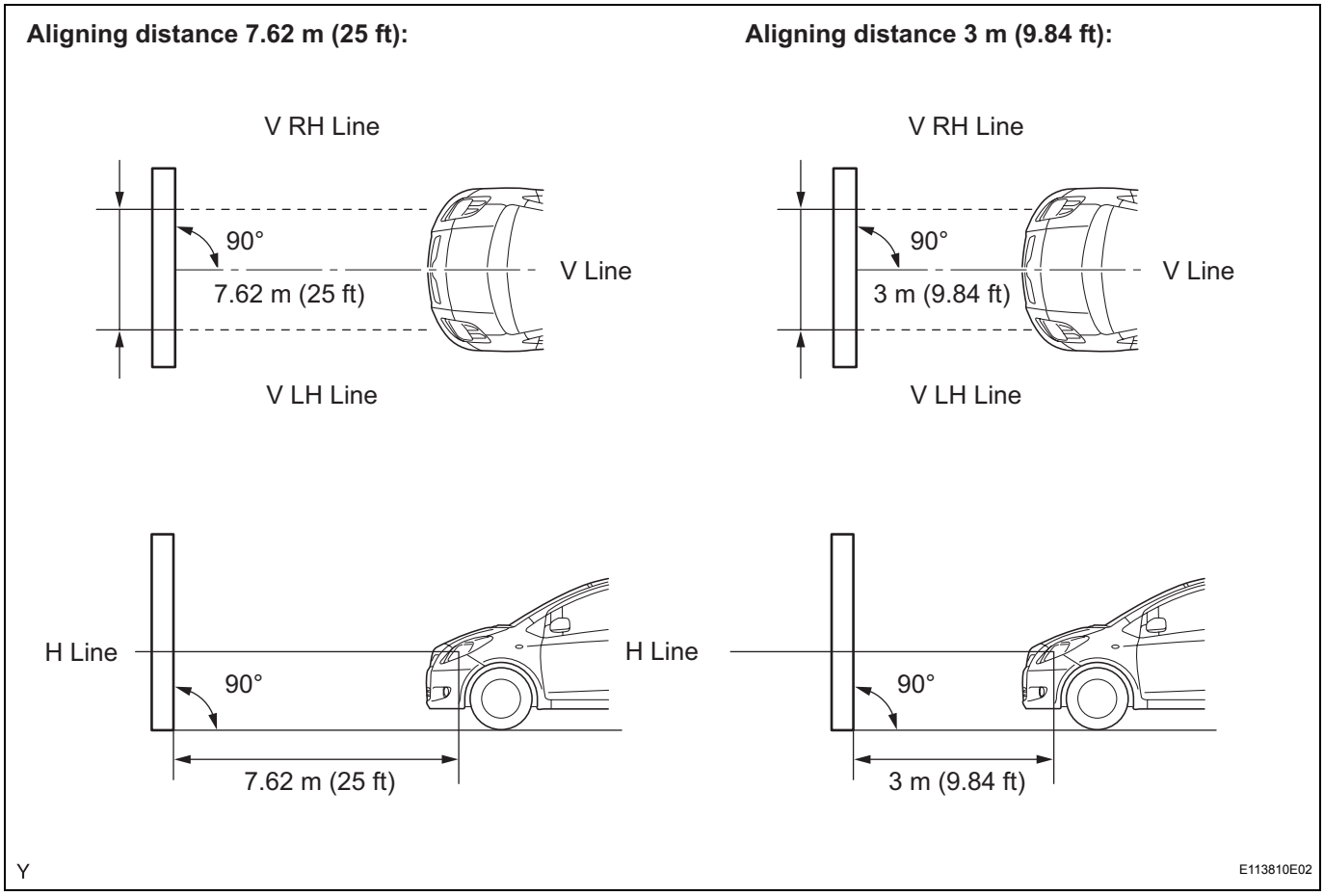

HINT:
- Stand the screen perpendicular to the ground.
- Align the V line on the screen with the center of the vehicle.

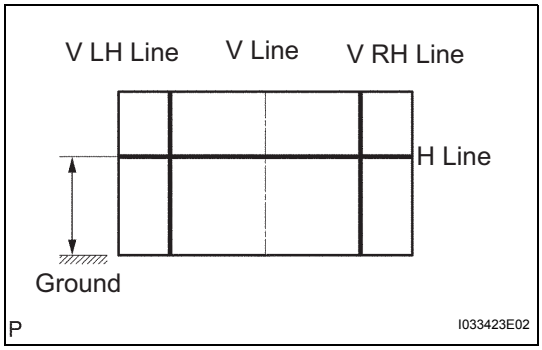

(e) Draw base lines (H line, V LH and V RH lines) on the screen, as shown in the illustration.
HINT:
- The base lines differ for "low-beam inspection" and "high-beam inspection".
- Mark the headlight bulb center marks on the screen. If the center mark cannot be observed on the headlight, use the center of the headlight bulb.

(1) H Line (Headlight height):
Draw a horizontal line across the screen so that it passes through the center marks. The H line should be at the same height as the headlight bulb center marks of the low-beam headlights.

(2) V LH Line and V RH Line (Center mark positions of left-hand (LH) and right-hand (RH) headlights):
Draw two vertical lines so that they intersect the H line at each center mark (aligned with the center of the low-beam headlight bulbs).

4. INSPECT HEADLIGHT AIMING

(a) Cover the headlight on the opposite side or disconnect its connector, to prevent light from the headlight not being inspected from affecting the headlight aiming inspection.

NOTICE:

Do not keep the headlight covered for more than 3 minutes. The headlight lens is made of synthetic resin, and may easily melt or be damaged due to heat.

(b) Start the engine.

NOTICE:

Engine rpm must be 1,500 or more.

(c) Turn on the headlight and make sure that the cutoff line falls within the specified area, as shown in the illustration.

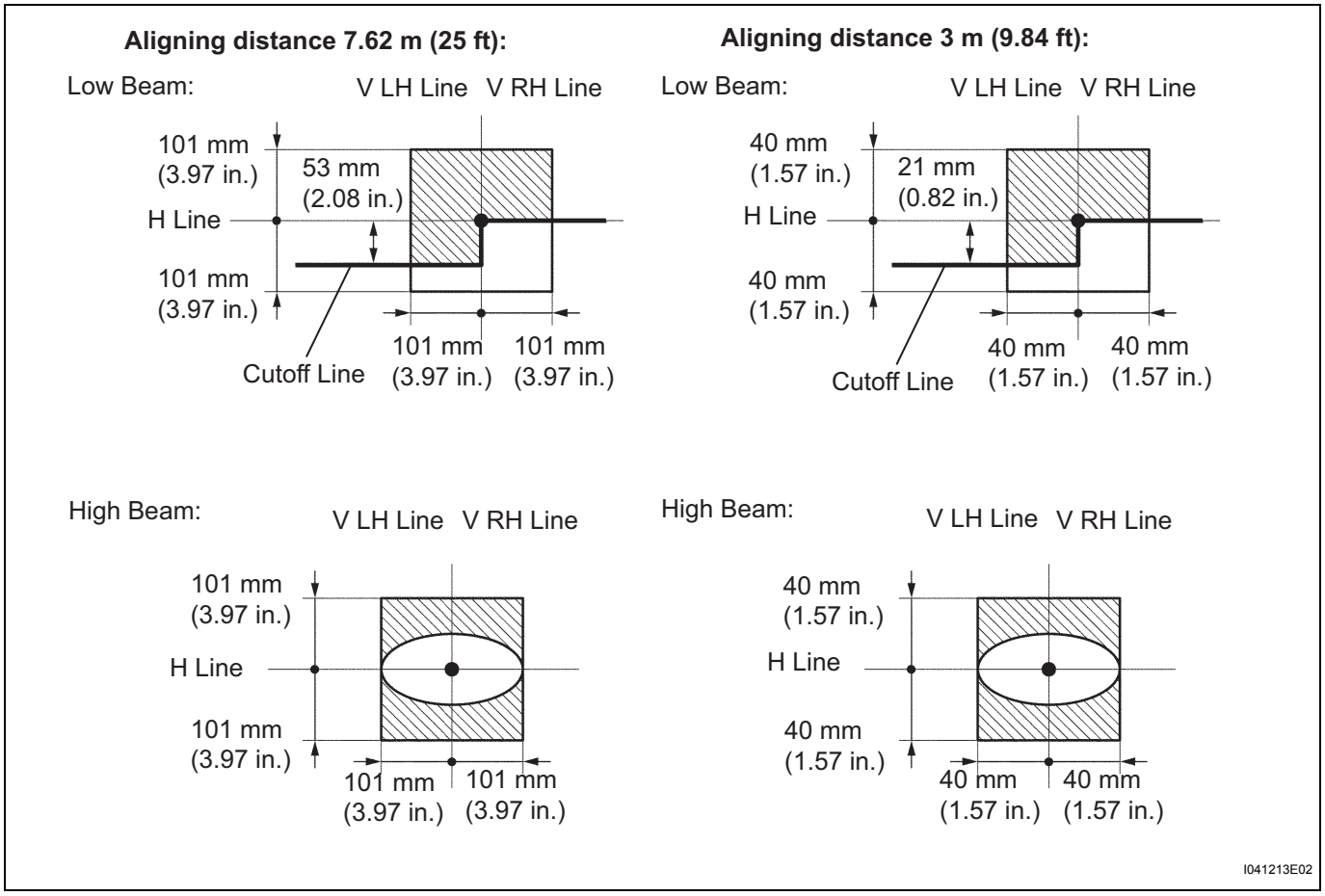

HINT:

- Since the low-beam light and the high-beam light are a unit, if the aim on one is correct, the other should also be correct. However, check both beams just to make sure.
- Alignment distance is 7.62 m (25 ft):
  The cutoff line is 101 mm (3.97 in.) above and below the H line as well as to the left and right of the V line with low-beam (SAE J599).

- Alignment distance is 3 m (9.84 ft):
  The cutoff line is 40 mm (1.57 in.) above and below the H line as well as to the left and right of the V line with low-beam (SAE J599).
- Alignment distance is 7.62 m (25 ft):
  The cutoff line is 101 mm (3.97 in.) above and below the H line as well as to the left and right of the V line with high-beam (SAE J599).
- Alignment distance is 3 m (9.84 ft):
  The cutoff line is 40 mm (1.57 in.) above and below the H line as well as to the left and right of the V line with high-beam (SAE J599).
- Alignment distance is 7.62 m (25 ft):
  The cutoff line is 53 mm (2.08 in.) below the H line with low-beam.
- Alignment distance is 3 m (9.84 ft):
  The cutoff line is 21 mm (0.82 in.) below the H line with low-beam.

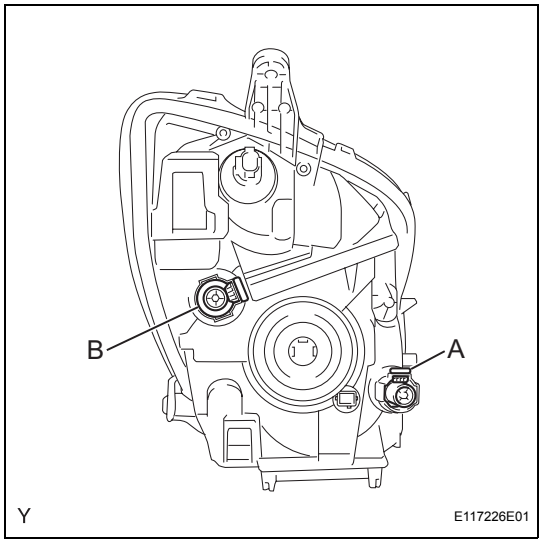

5. ADJUST HEADLIGHT AIMING

(a) Adjust the aiming vertically:
Adjust the headlight aim to within the specified range by turning aiming screw A with a screwdriver.
NOTICE:
The final turn of the aiming screw should be made in the clockwise direction. If the screw is tightened excessively, loosen it and then retighten it, so that the final turn of the screw is in the clockwise direction.

(b) Perform low-beam aim adjustment.
HINT:
The headlight aim moves down when the aiming screw is turned clockwise, and moves up when the aiming screw is turned counterclockwise.

(c) Adjust the aim horizontally:
Adjust the headlight aim to within the specified range by turning aiming screw B with a screwdriver.
NOTICE:
The final turn of the aiming screw should be made in the clockwise direction. If the screw is tightened excessively, loosen it and then retighten it, so that the final turn of the screw is in the clockwise direction.

REASSEMBLY

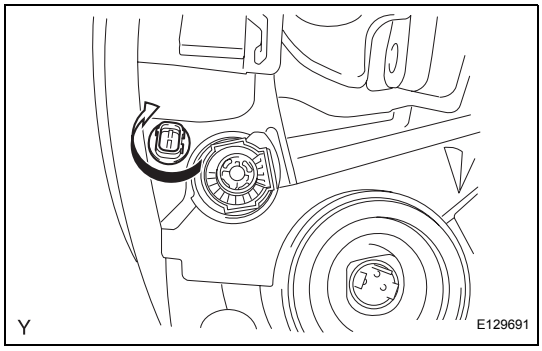

1. INSTALL PARKING LIGHT BULB

(a) Install the parking light bulb into the light socket.

(b) Turn the parking light bulb socket and bulb, in the direction indicated by the arrow in the illustration, to install them.

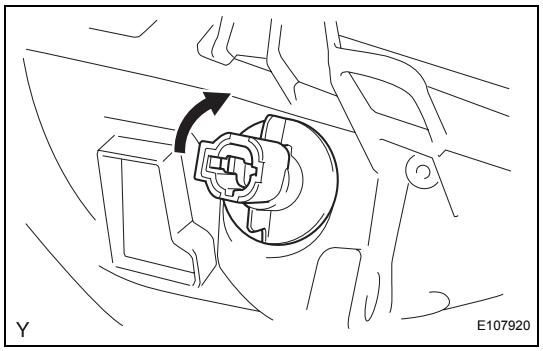

2. INSTALL FRONT TURN SIGNAL LIGHT BULB

(a) Install the front turn signal light bulb into the light socket.

(b) Turn the front turn signal light bulb socket and bulb, in the direction indicated by the arrow in the illustration, to install them.

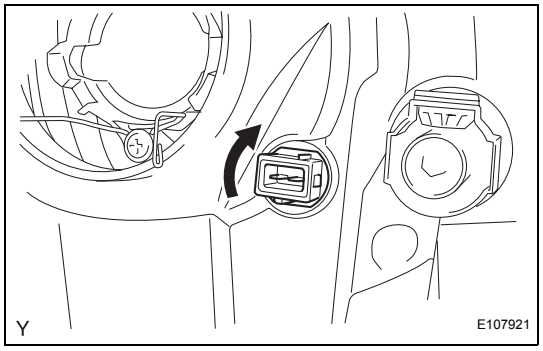

3. INSTALL CLEARANCE LIGHT BULB

(a) Install the clearance light bulb into the light socket.

(b) Turn the clearance light bulb socket and bulb, in the direction indicated by the arrow in the illustration, to install them.

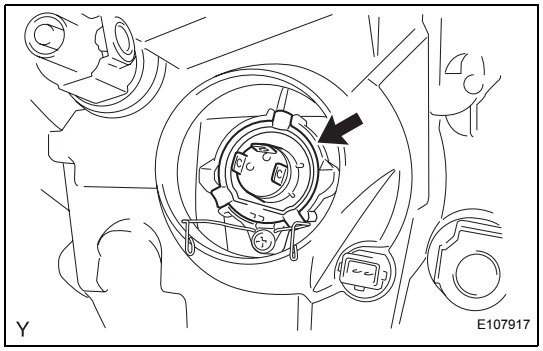

4. INSTALL HEADLIGHT BULB

(a) Install the headlight bulb.

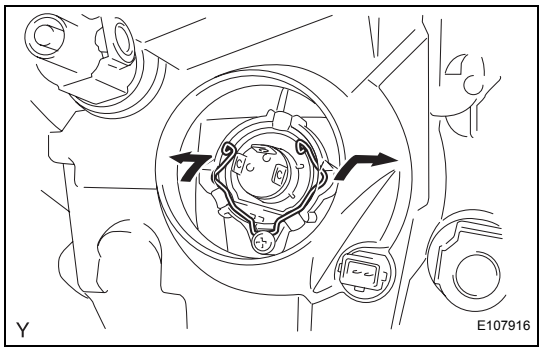

(b) Lock the set spring by moving it in the directions indicated by the arrows in the illustration.

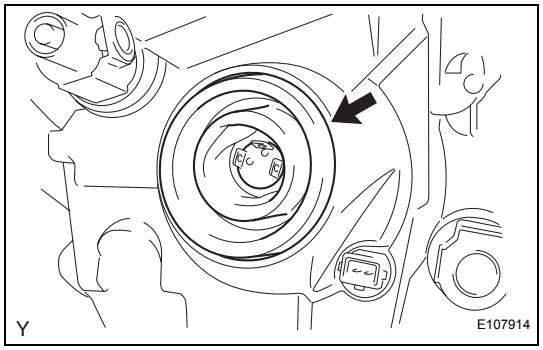

(c) Install the socket cover.

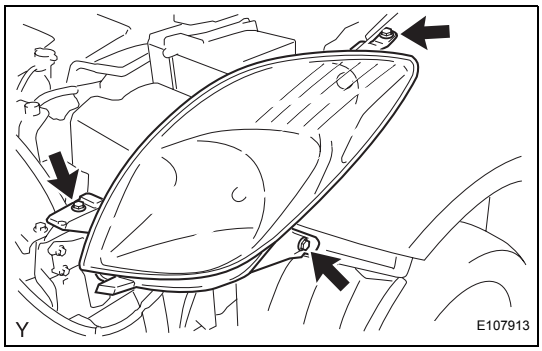

INSTALLATION

1. **INSTALL HEADLIGHT ASSEMBLY**
   (a) Connect the 3 connectors.
   (b) Install the headlight with the 3 screws.
2. **INSTALL FRONT BUMPER COVER (See page ET-33)**
3. **CONNECT CABLE TO NEGATIVE BATTERY TERMINAL**
   Torque: 5.4 N*m (55 kgf*cm, 48 in.*lbf)
4. **PREPARE VEHICLE FOR HEADLIGHT AIMING ADJUSTMENT (See page LI-98)**
5. **PREPARE FOR HEADLIGHT AIMING (for Using a Tester) (See page LI-98)**
6. **PREPARE FOR HEADLIGHT AIMING (for Using a Screen) (See page LI-99)**
7. **INSPECT HEADLIGHT AIMING (See page LI-101)**
8. **ADJUST HEADLIGHT AIMING (See page LI-102)**

REPAIR

HINT:
- Use the same procedure for both the RH and LH sides.
- The procedure described below is for the LH side.
- If only the installation area of the headlight is damaged, the repairs described below can be performed inexpensively by using brackets for the repair. This may only be done if the other areas of the headlight are not damaged.

1. DISCONNECT CABLE FROM NEGATIVE BATTERY TERMINAL

2. REMOVE FRONT BUMPER COVER (See page ET-24)

3. REMOVE HEADLIGHT ASSEMBLY (See page LI-97)

4. INSTALL HEADLIGHT PROTECTOR RETAINER UPPER

HINT:
- If only the installation area of the headlight is damaged, use a bracket for a low-cost repair.
- Ensure that other areas of the headlight are not damaged.

(a) Cut off the portion indicated by the hatched lines in the illustration and smooth the surface with sandpaper.

NOTICE:
After cutting off the shaded portion, place the headlight protector retainer upper against the bosses and gradually file away the shaded portion until installation is possible.

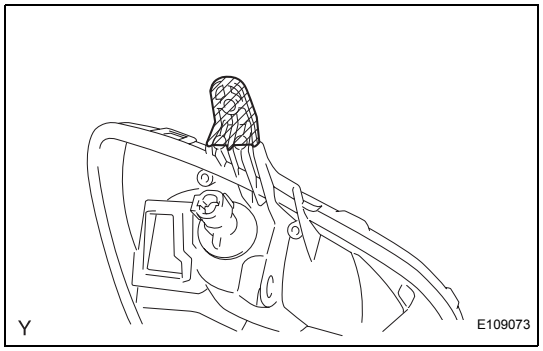

(b) Install the headlight protector retainer upper with the 2 screws.

5. INSTALL HEADLIGHT PROTECTOR RETAINER LOWER

HINT:
- If only the installation area of the headlight is damaged, use a bracket for a low-cost repair.
- Ensure that other areas of the headlight are not damaged.

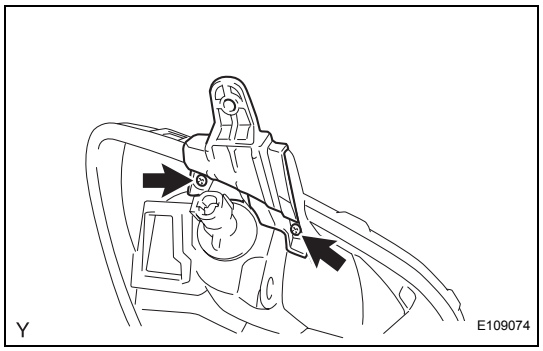

LI

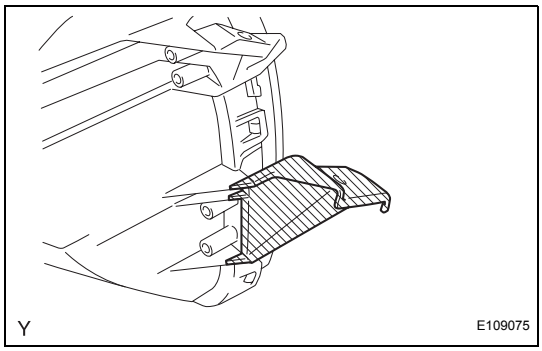

(a) Cut off the portion indicated by the hatched lines in the illustration and smooth the surface with sandpaper.
NOTICE:
After cutting off the shaded portion, place the headlight protector retainer lower against the bosses and gradually file away the shaded portion until installation is possible.

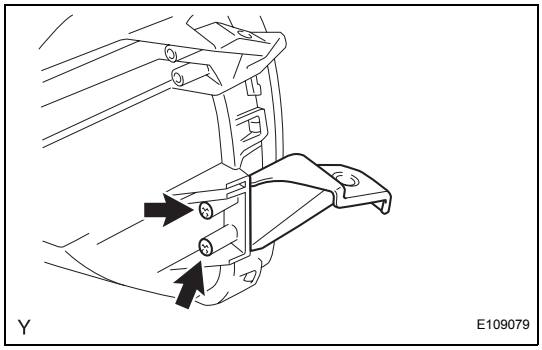

(b) Install the headlight protector retainer lower with the 2 screws.

6. **INSTALL HEADLIGHT ASSEMBLY (See page LI-104)**
7. **INSTALL FRONT BUMPER COVER (See page ET-33)**
8. **CONNECT CABLE TO NEGATIVE BATTERY TERMINAL**
   Torque: 5.4 N*m (55 kgf*cm, 48 in.*lbf)
9. **PREPARE VEHICLE FOR HEADLIGHT AIMING ADJUSTMENT (See page LI-98)**
10. **PREPARE FOR HEADLIGHT AIMING (for Using a Tester) (See page LI-98)**
11. **PREPARE FOR HEADLIGHT AIMING (for Using a Screen) (See page LI-99)**
12. **INSPECT HEADLIGHT AIMING (See page LI-101)**
13. **ADJUST HEADLIGHT AIMING (See page LI-102)**

SIDE TURN SIGNAL LIGHT ASSEMBLY (for Hatchback)

COMPONENTS

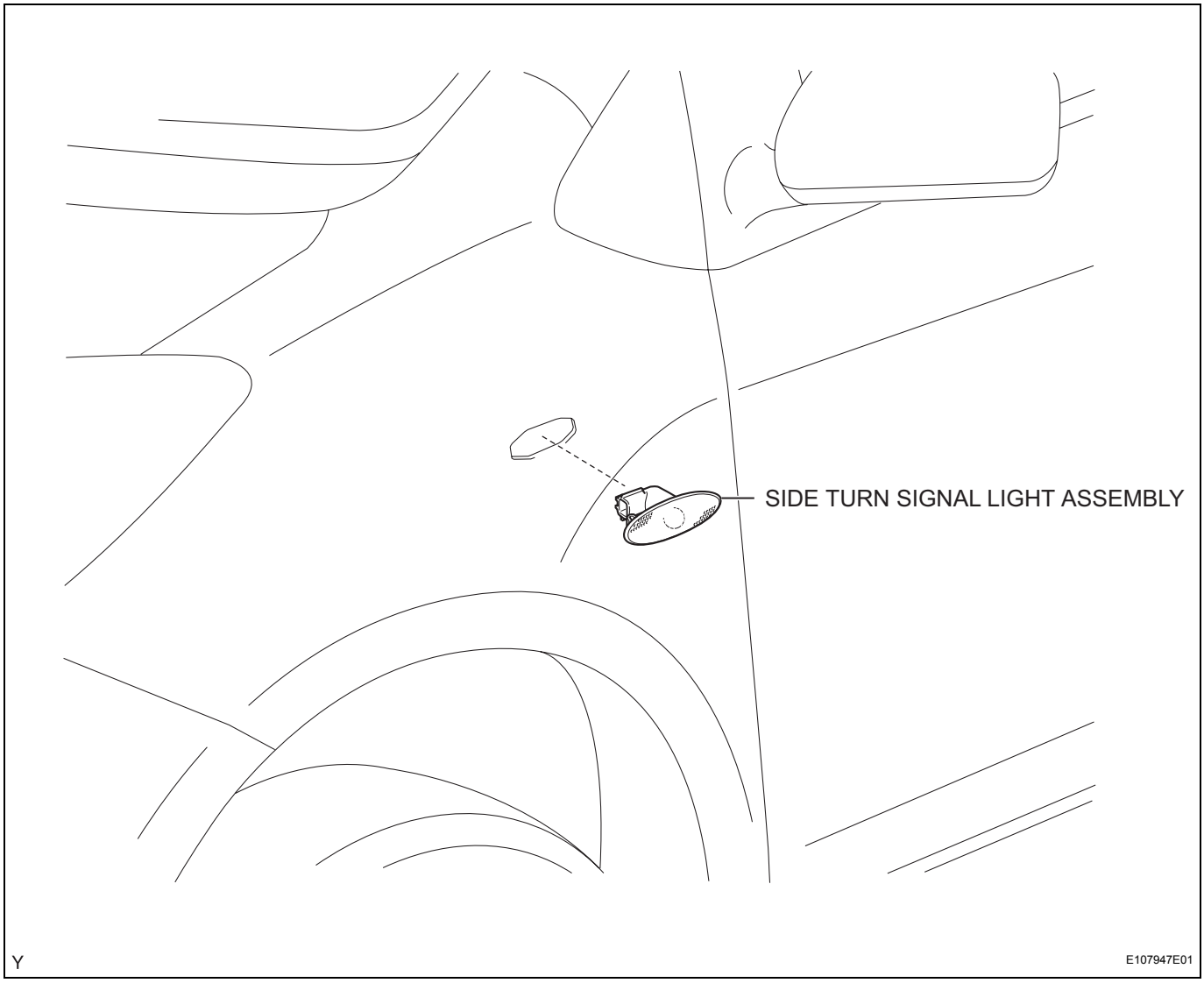

REMOVAL

HINT:
- Use the same procedure for both the RH and LH sides.
- The procedure described below is for the LH side.

1. DISCONNECT CABLE FROM NEGATIVE BATTERY TERMINAL

2. REMOVE SIDE TURN SIGNAL LIGHT ASSEMBLY
(a) Disengage the 2 claws and disconnect the side turn signal light.
(b) Disconnect the connector and remove the side turn signal light.

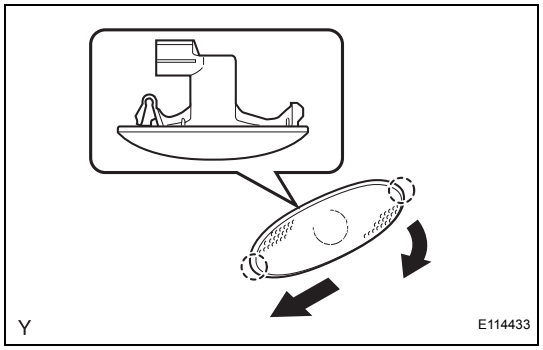

INSTALLATION

1. INSTALL SIDE TURN SIGNAL LIGHT ASSEMBLY
(a) Connect the connector.
(b) Engage the 2 claws and install the side turn signal light assembly, as shown in the illustration.

2. CONNECT CABLE TO NEGATIVE BATTERY TERMINAL
Torque: 5.4 N*m (55 kgf*cm, 48 in.*lbf)

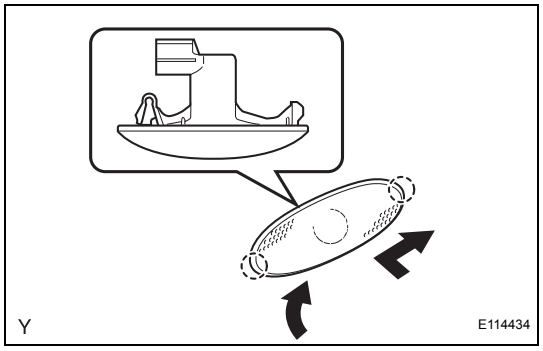

FOG LIGHT ASSEMBLY (for Sedan)

COMPONENTS

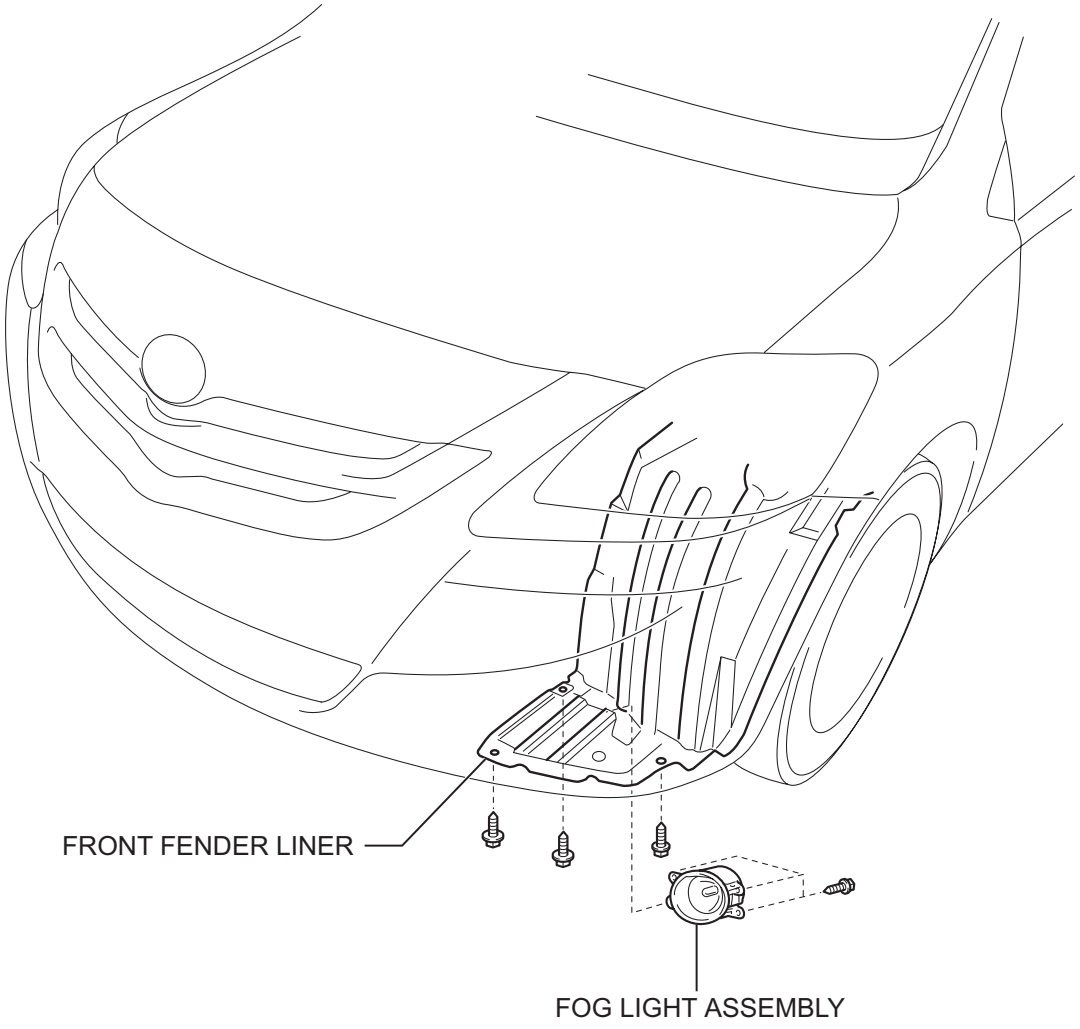

Y

E127801E01

REMOVAL

HINT:
- Use the same procedure for both the RH and LH sides.
- The procedure described below is for the LH side.

1. DISCONNECT CABLE FROM NEGATIVE BATTERY TERMINAL

2. REMOVE FRONT FENDER LINER

(a) Remove the 3 screws and remove the front side of the front fender liner.

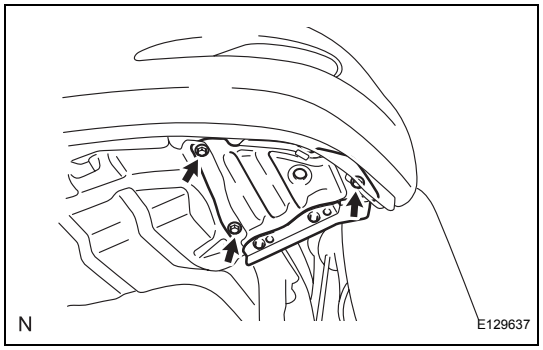

3. REMOVE FOG LIGHT ASSEMBLY

(a) Disconnect the connector.

(b) Remove the 3 screws, then remove the fog light.

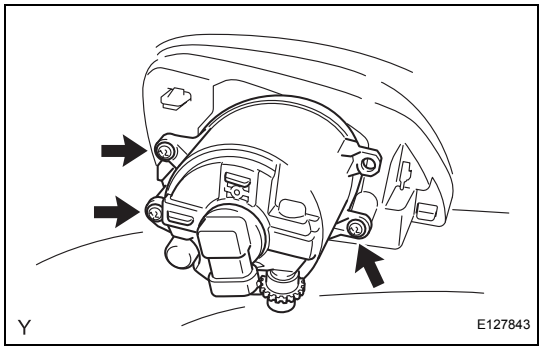

(c) Turn the fog light bulb, in the direction indicated by the arrow in the illustration, to remove it.

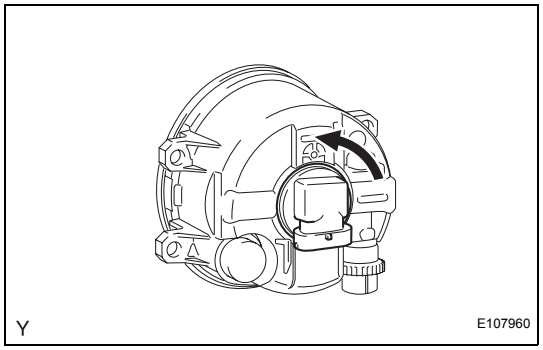

LI

ADJUSTMENT

1. PREPARE VEHICLE FOR FOG LIGHT AIMING ADJUSTMENT

(a) Prepare the vehicle:
- Ensure that there is no damage or deformation of the body around the fog lights.
- Fill the fuel tank.
- Fill the oil to the specified level.
- Fill the coolant to the specified level.
- Inflate the tires to the appropriate pressure.
- Place the spare tire, tools and jack in their original positions.
- Unload the trunk.
- Sit a person of average weight (75 kg, 165 lb) in the driver seat.

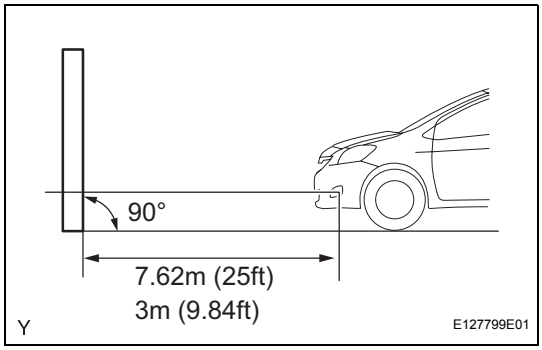

2. PREPARE FOR FOG LIGHT AIMING

(a) Prepare the vehicle in accordance with the following conditions:
- Place the vehicle in a location that is dark enough to clearly observe the cutoff line. The cutoff line is a distinct line, below which light from the fog lights can be observed and above which it cannot.
- Place the vehicle at a 90°angle to the wall.
- Keep a 7.62 m (25 ft) distance between the center of the fog light bulb and the wall.
- Place the vehicle on a level surface.
- Bounce the vehicle up and down to settle the suspension.

NOTICE:
A distance of 7.62 m (25 ft) between the vehicle (center of the fog light bulb) and the wall is necessary for proper aim adjustment. If unable to secure a distance of 7.62 m (25 ft), secure a distance of exactly 3 m (9.84 ft) to check and adjust the fog light aim. (Since the target zone will change with the distance, follow the instructions shown in the illustration.)

(b) Prepare a piece of thick white paper (approximately 2 m (6.6 ft) (high) x 4 m (13.1 ft) (wide)) to use as a screen.

(c) Draw a vertical line down the center of the screen (V line).

(d) Set the screen as shown in the illustration.
HINT:
- Stand the screen perpendicular to the ground.
- Align the V line on the screen with the center of the vehicle.

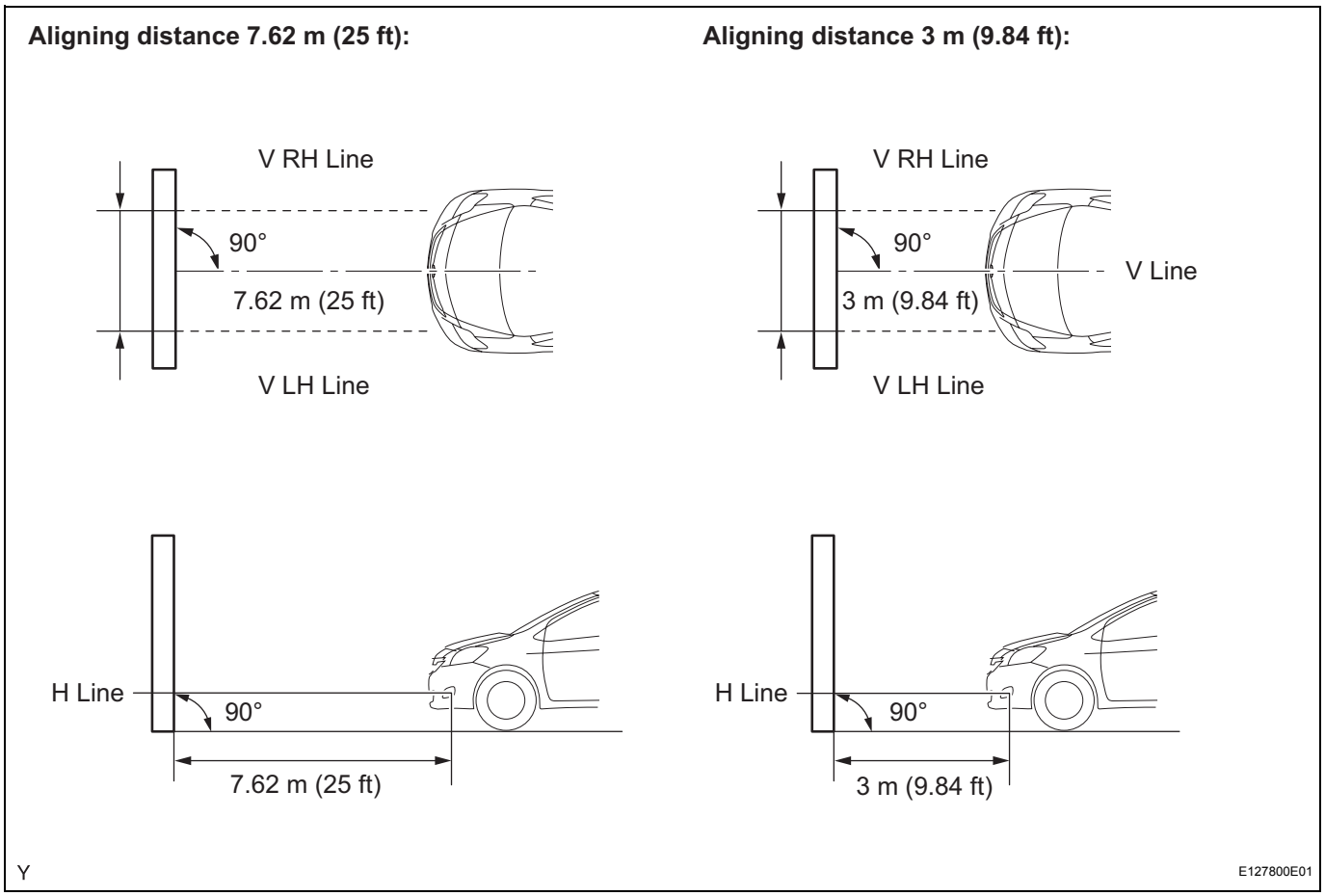

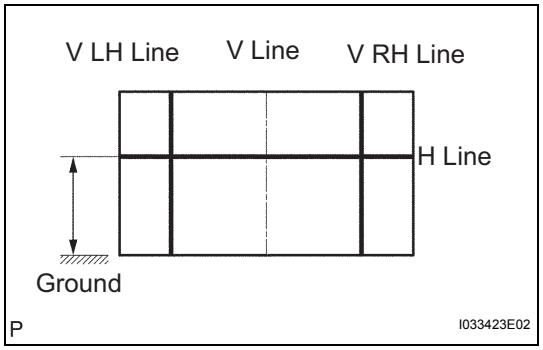

(e) Draw base lines (H line, V LH, V RH lines) on the screen as shown in the illustration.
HINT:
Mark the fog light bulb center marks on the screen. If the center mark cannot be observed on the fog light, use the center of the fog light bulb or the manufacturer's name marked on the fog light as the center mark.
(1) H Line (Fog light height):
Draw a horizontal line across the screen so that it passes through the center marks. The H line should be at the same height as the fog light bulb center marks of the low-beam fog lights.
(2) V LH Line and V RH Line (Center mark positions of left-hand (LH) and right-hand (RH) fog lights):
Draw two vertical lines so that they intersect the H line at each center mark.

3. INSPECT FOG LIGHT AIMING

(a) Cover the fog light or disconnect the connector of the fog light on the opposite side to prevent light from the fog light not being inspected from affecting fog light aiming inspection.
(b) Start the engine.
NOTICE:
Engine rpm must be 1,500 or more.

(c) Turn on the fog light and make sure that the cutoff line falls within the specified area, as shown in the illustration.

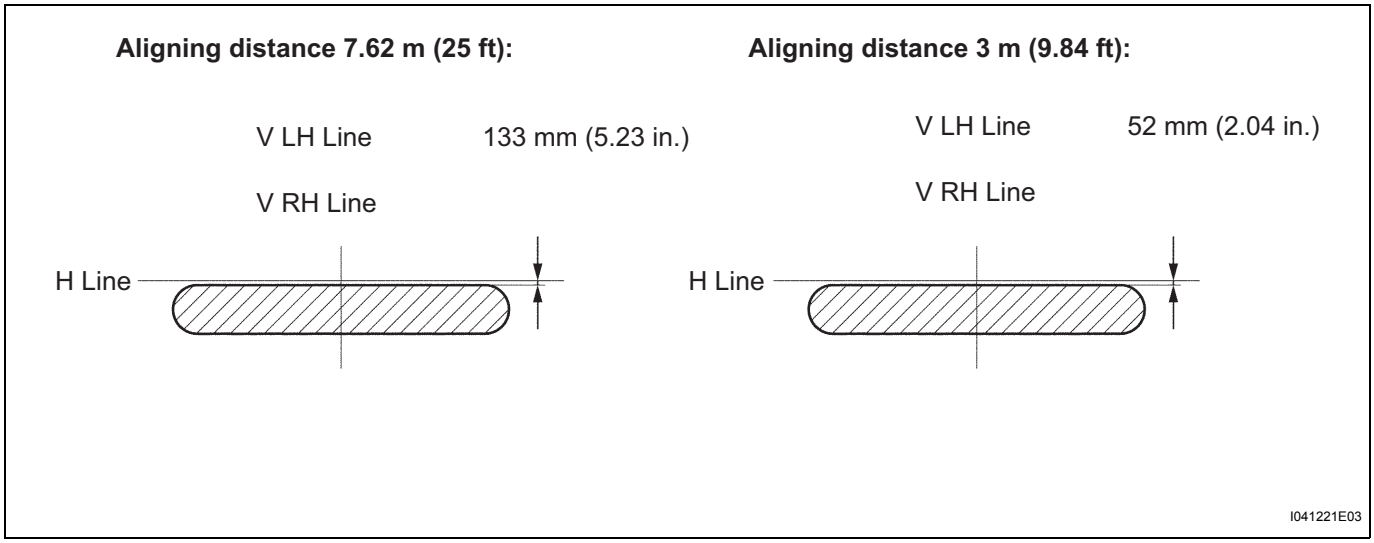

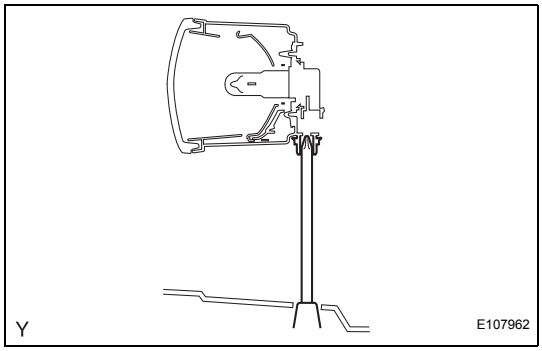

4. ADJUST FOG LIGHT AIMING

(a) Adjust the fog light aim to within the specified range by turning the aiming screw with a screwdriver.
NOTICE:
The final turn of the aiming screw should be made in the clockwise direction. If the screw is tightened excessively, loosen it and then retighten it, so that the final turn of the screw is in the clockwise direction.

INSTALLATION

1. INSTALL FOG LIGHT ASSEMBLY

(a) Turn the fog light bulb, in the direction indicated by the arrow in the illustration, to install it.

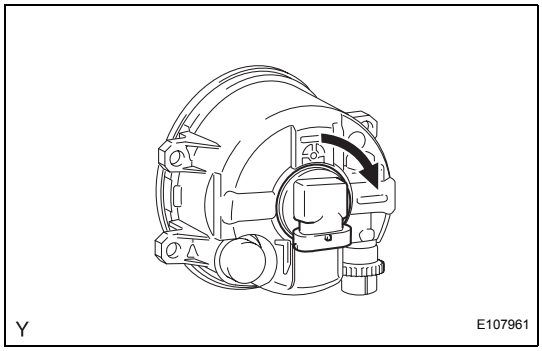

(b) Install the fog light with the 3 screws.
(c) Connect the connector.

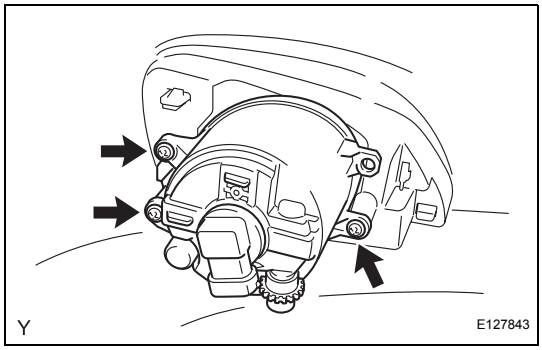

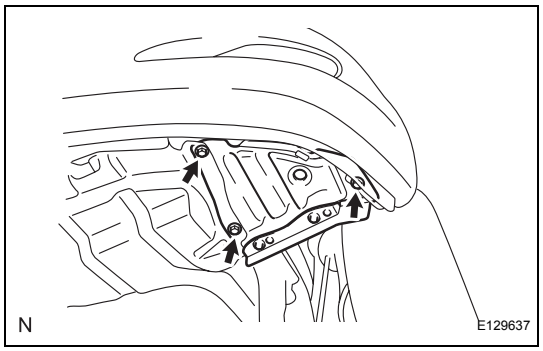

2. **INSTALL FRONT FENDER LINER**
   (a) Install the 3 screws.
3. **CONNECT CABLE TO NEGATIVE BATTERY TERMINAL**
   Torque: 5.4 N*m (55 kgf*cm, 48 in.*lbf)
4. **PREPARE VEHICLE FOR FOG LIGHT AIMING ADJUSTMENT (See page LI-109)**
5. **PREPARE FOR FOG LIGHT AIMING (See page LI-110)**
6. **INSPECT FOG LIGHT AIMING (See page LI-111)**
7. **ADJUST FOG LIGHT AIMING (See page LI-112)**

FOG LIGHT ASSEMBLY (for Hatchback)

COMPONENTS

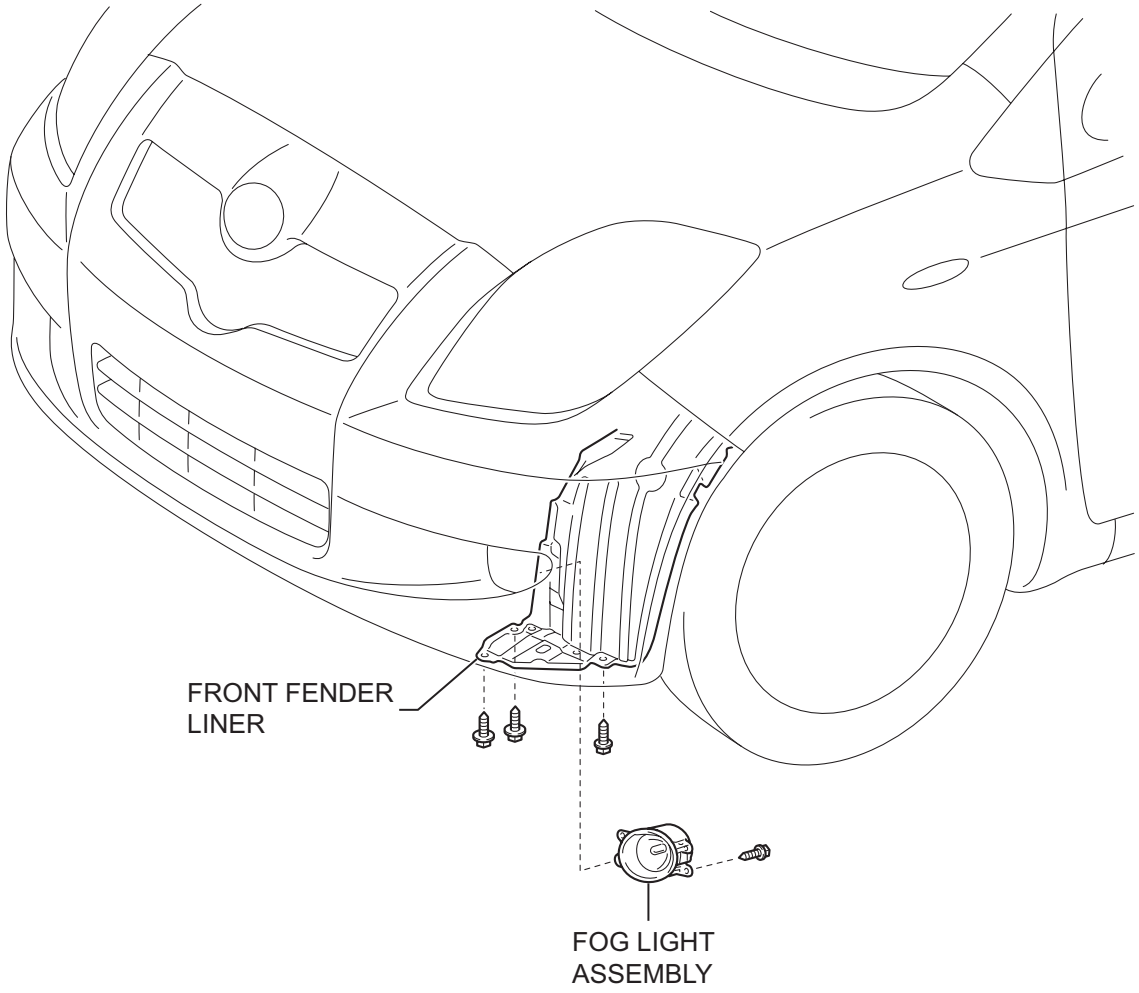

Y

E114475E01

REMOVAL

HINT:
- Use the same procedure for both the RH and LH sides.
- The procedure described below is for the LH side.

1. DISCONNECT CABLE FROM NEGATIVE BATTERY TERMINAL

2. REMOVE FRONT FENDER LINER

(a) Remove the 3 screws and remove the front side of the front fender liner.

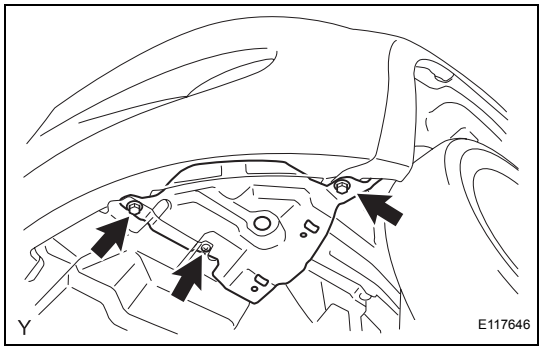

3. REMOVE FOG LIGHT ASSEMBLY

(a) Disconnect the connector.

(b) Remove the screw, then remove the fog light.

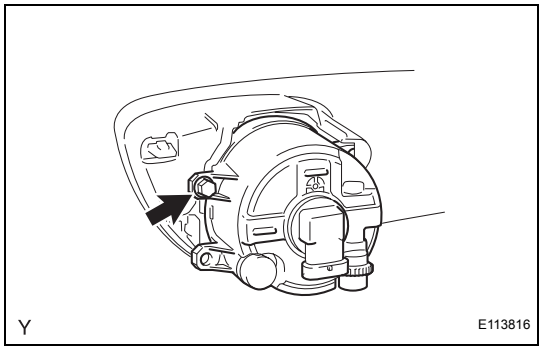

(c) Turn the fog light bulb, in the direction indicated by the arrow in the illustration, to remove it.

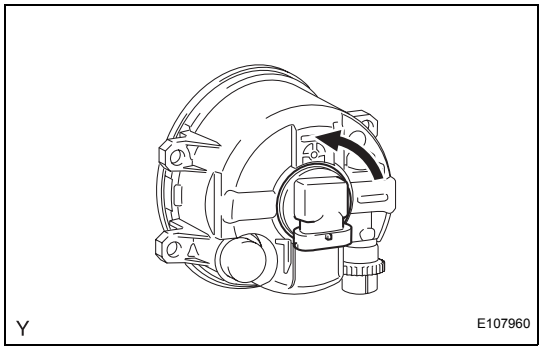

LI

ADJUSTMENT

1. PREPARE VEHICLE FOR FOG LIGHT AIMING ADJUSTMENT

(a) Prepare the vehicle:
- Ensure that there is no damage or deformation of the body around the fog lights.
- Fill the fuel tank.
- Fill the oil to the specified level.
- Fill the coolant to the specified level.
- Inflate the tires to the appropriate pressure.
- Place the spare tire, tools and jack in their original positions.
- Unload the trunk.
- Sit a person of average weight (68 kg, 150 lb) in the driver seat.

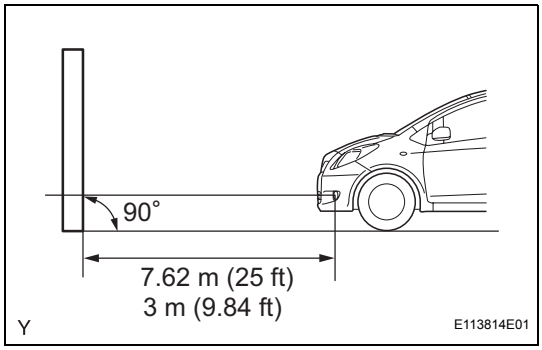

2. PREPARE FOR FOG LIGHT AIMING

(a) Prepare the vehicle in accordance with the following conditions:
- Place the vehicle in a location that is dark enough to clearly observe the cutoff line. The cutoff line is a distinct line, below which light from the fog lights can be observed and above which it cannot.
- Place the vehicle at a 90°angle to the wall.
- Keep a 7.62 m (25 ft) distance between the center of the fog light bulb and the wall.
- Place the vehicle on a level surface.
- Bounce the vehicle up and down to settle the suspension.

NOTICE:
A distance of 7.62 m (25 ft) between the vehicle (center of the fog light bulb) and the wall is necessary for proper aim adjustment. If unable to secure a distance of 7.62 m (25 ft), secure a distance of exactly 3 m (9.84 ft) to check and adjust the fog light aim. (Since the target zone will change with the distance, follow the instructions shown in the illustration.)

(b) Prepare a piece of thick white paper (approximately 2 m (6.6 ft) (height) x 4 m (13.1 ft) (width)) to use as a screen.

(c) Draw a vertical line down the center of the screen (V line).

(d) Set the screen as shown in the illustration.

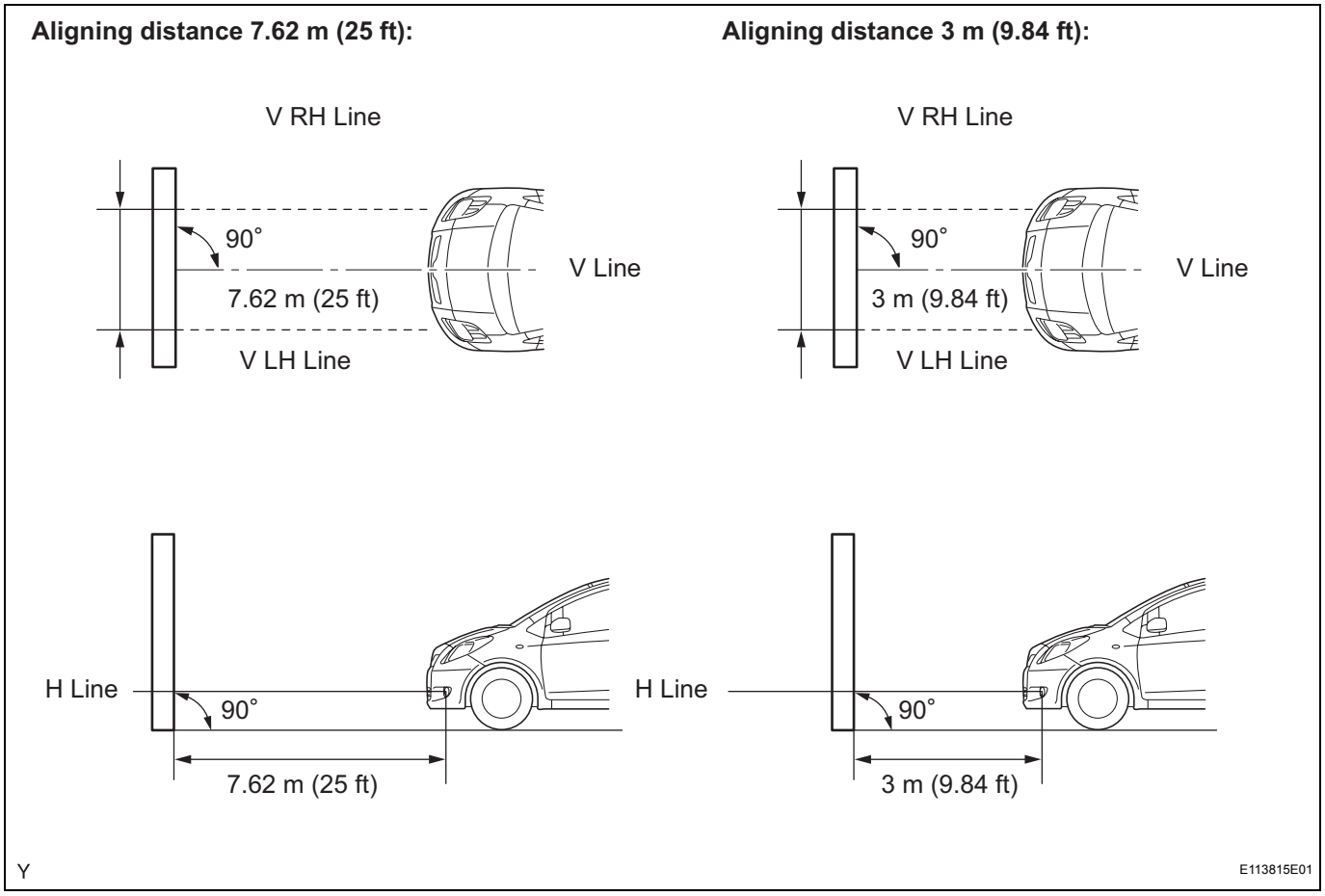

HINT:
- Stand the screen perpendicular to the ground.
- Align the V line on the screen with the center of the vehicle.

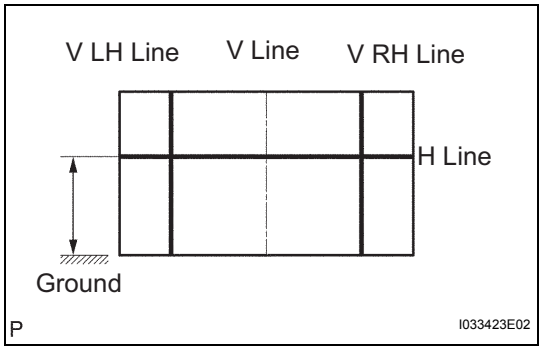

(e) Draw base lines (H line, V LH, V RH lines) on the screen as shown in the illustration.
HINT:
Mark the fog light bulb center marks on the screen. If the center mark cannot be observed on the fog light, use the center of the fog light bulb or the manufacturer's name marked on the fog light as the center mark.
(1) H Line (Fog light height):
Draw a horizontal line across the screen so that it passes through the center marks. The H line should be at the same height as the fog light bulb center marks of the low-beam fog lights.
(2) V LH Line and V RH Line (Center mark positions of left-hand (LH) and right-hand (RH) fog lights):
Draw two vertical lines so that they intersect the H line at each center mark.

LI

3. INSPECT FOG LIGHT AIMING

(a) Cover the fog light or disconnect the connector of the fog light on the opposite side to prevent light from the fog light not being inspected from affecting fog light aiming inspection.

(b) Start the engine.
NOTICE:
Engine rpm must be 1,500 or more.

(c) Turn on the fog light and make sure that the cutoff line falls within the specified area, as shown in the illustration.

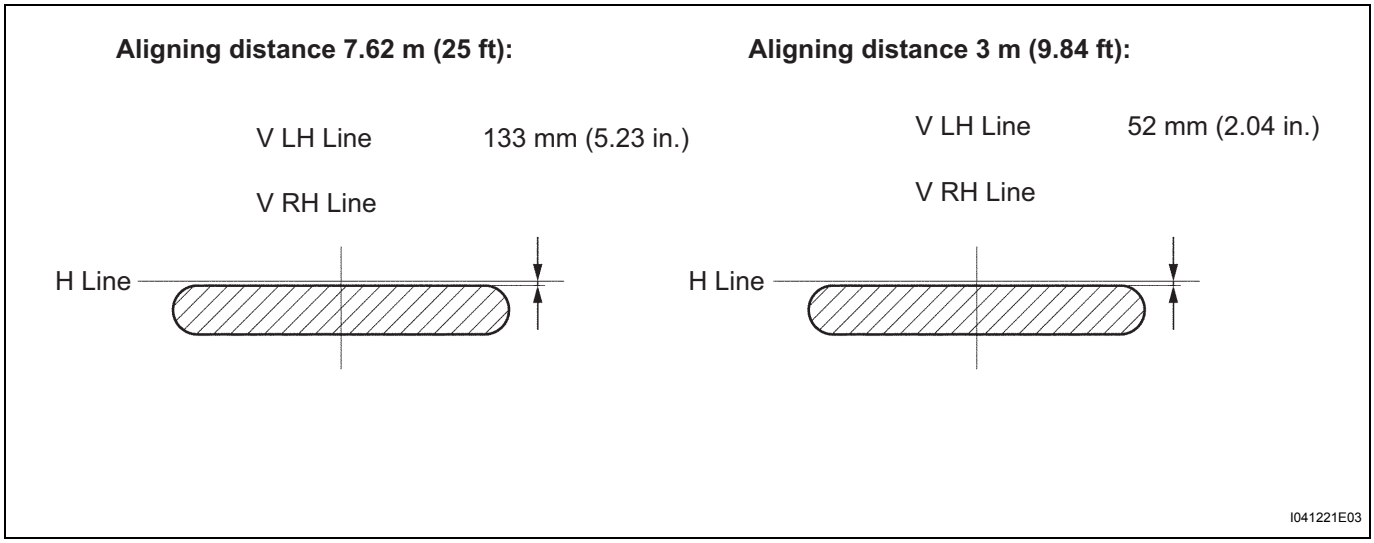

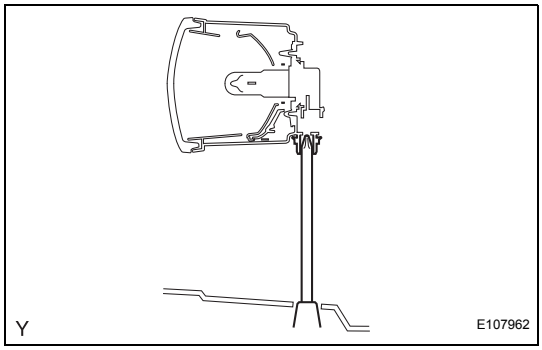

4. ADJUST FOG LIGHT AIMING

(a) Adjust the fog light aim to within the specified range by turning the aiming screw with a screwdriver.
NOTICE:
The final turn of the aiming screw should be made in the clockwise direction. If the screw is tightened excessively, loosen it and then retighten it, so that the final turn of the screw is in the clockwise direction.

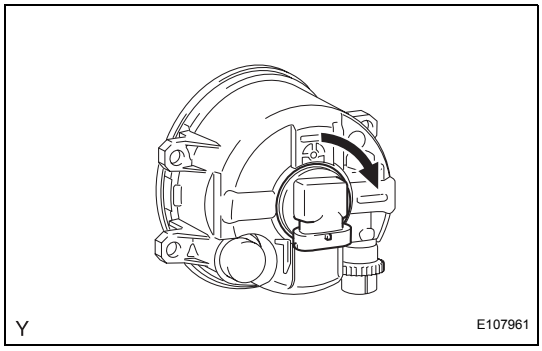

INSTALLATION

1. INSTALL FOG LIGHT ASSEMBLY

(a) Turn the fog light bulb, in the direction indicated by the arrow in the illustration, to install it.

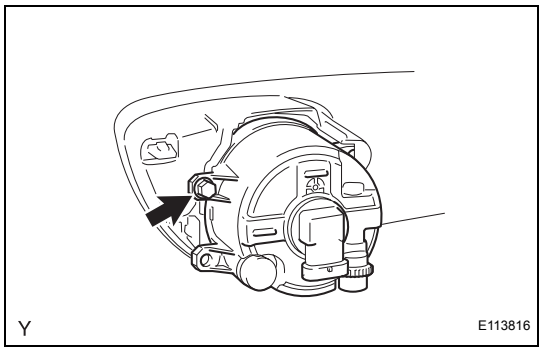

(b) Install the fog light with the screw.
(c) Connect the connector.

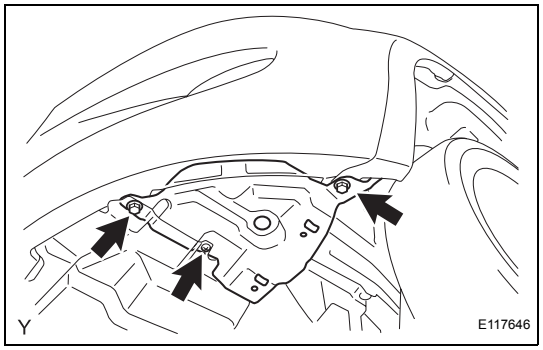

2. INSTALL FRONT FENDER LINER
(a) Install the 3 screws.

3. CONNECT CABLE TO NEGATIVE BATTERY TERMINAL
Torque: 5.4 N*m (55 kgf*cm, 48 in.*lbf)

4. PREPARE VEHICLE FOR FOG LIGHT AIMING ADJUSTMENT (See page LI-115)

5. PREPARE FOR FOG LIGHT AIMING (See page LI-116)

6. INSPECT FOG LIGHT AIMING (See page LI-118)

7. ADJUST FOG LIGHT AIMING (See page LI-118)

REAR COMBINATION LIGHT ASSEMBLY (for Sedan)

COMPONENTS

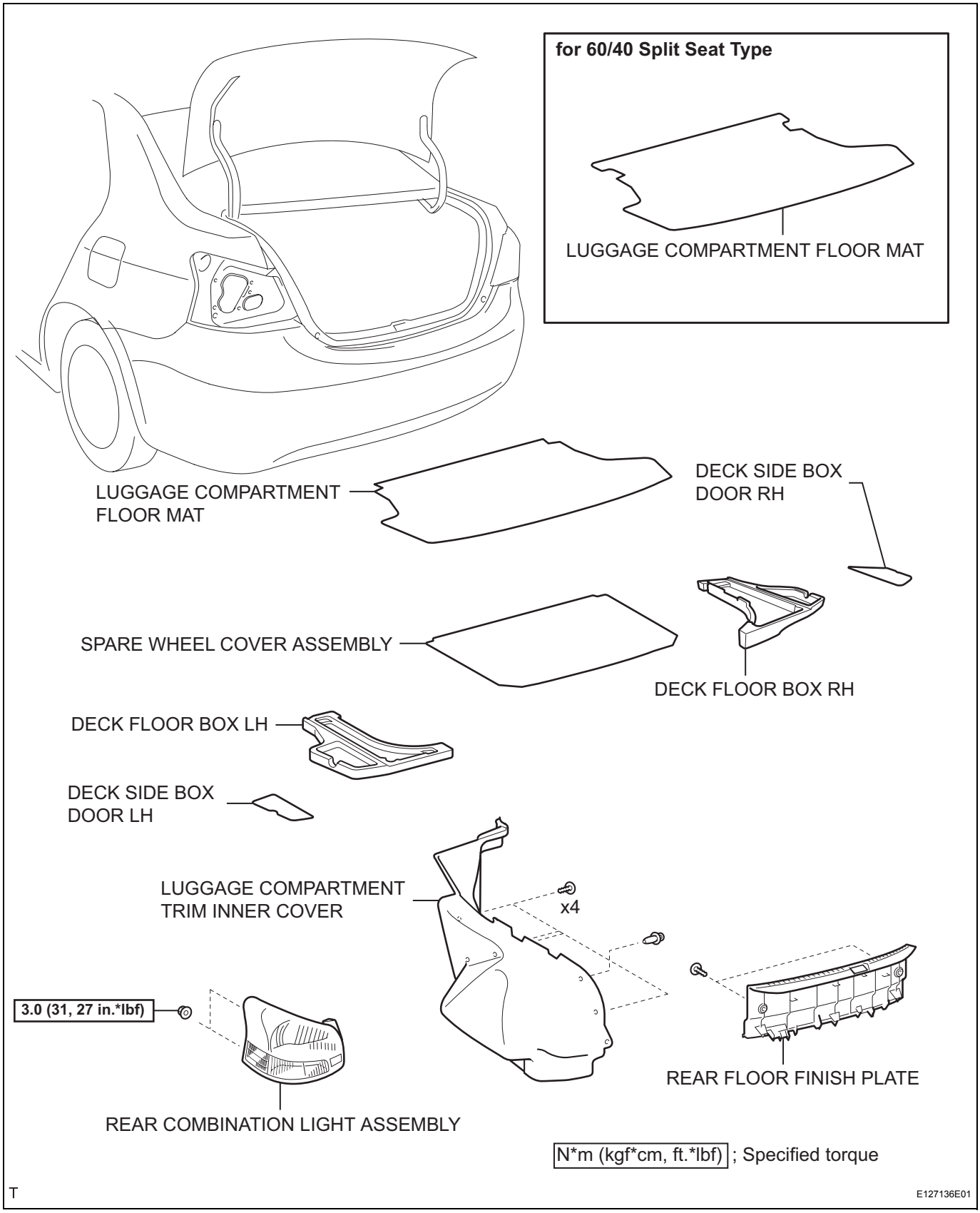

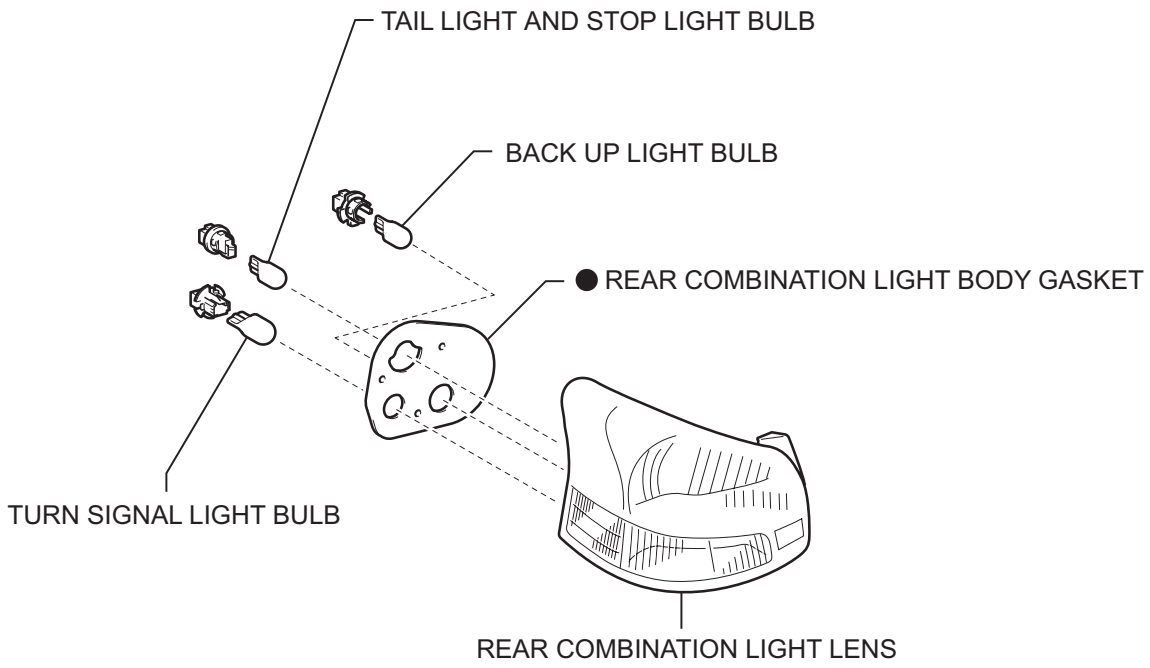

● Non-reusable part

T

E127137E01

REMOVAL

HINT:
- Use the same procedure for both the RH and LH sides.
- The procedure described below is for the LH side.

1. DISCONNECT CABLE FROM NEGATIVE BATTERY TERMINAL

2. REMOVE LUGGAGE COMPARTMENT FLOOR MAT
(a) Remove the luggage compartment floor mat.

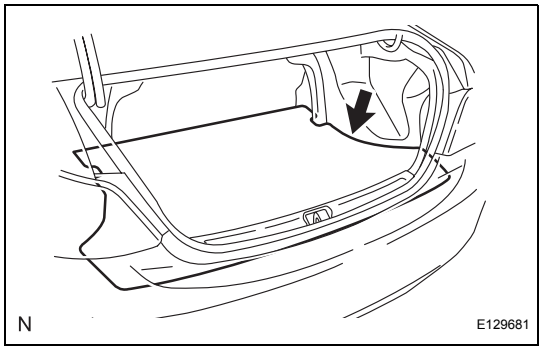

3. REMOVE SPARE WHEEL COVER ASSEMBLY
(a) Remove the spare wheel cover assembly.

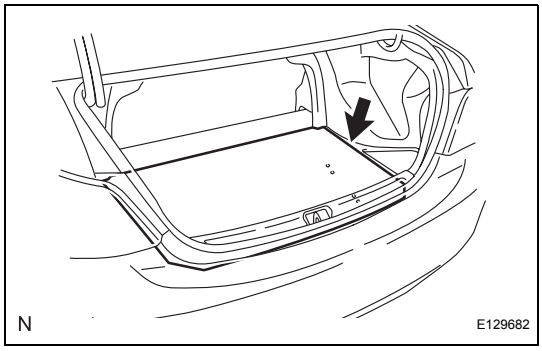

4. REMOVE DECK FLOOR BOX LH
(a) Remove the deck floor box with the deck side box door.

5. REMOVE DECK FLOOR BOX RH
HINT:
Use the same procedure as for the LH side.

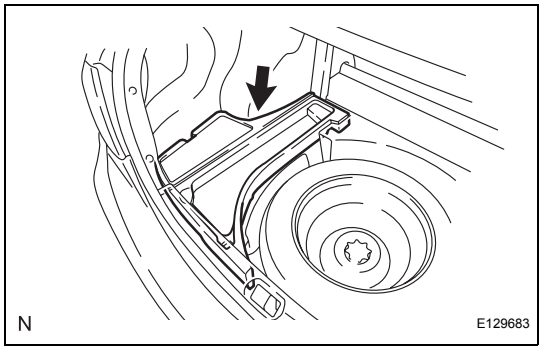

6. REMOVE REAR FLOOR FINISH PLATE
(a) Disengage the 2 clips and the rear floor finish plate.

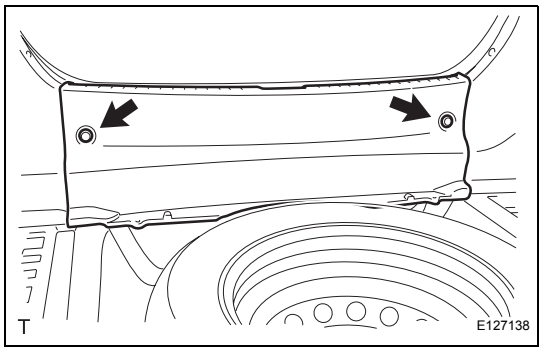

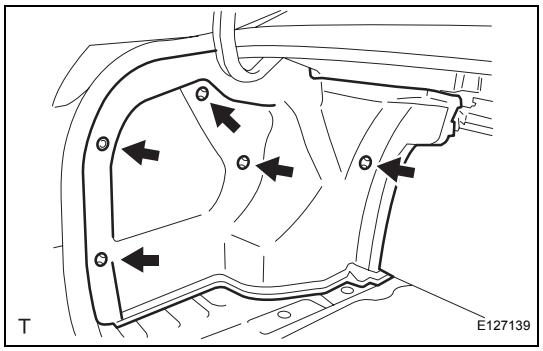

7. REMOVE LUGGAGE COMPARTMENT TRIM INNER COVER

(a) Disengage the 5 clips and remove the luggage compartment trim inner cover.

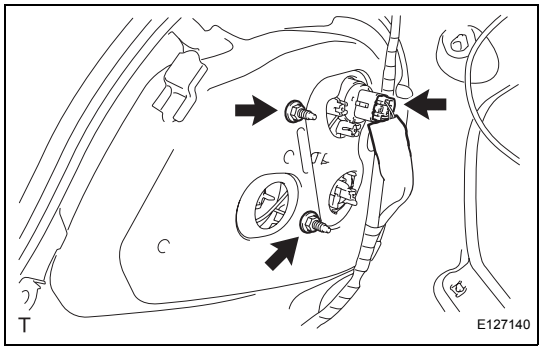

8. REMOVE REAR COMBINATION LIGHT ASSEMBLY

(a) Remove the 2 nuts.

(b) Disconnect the connector.

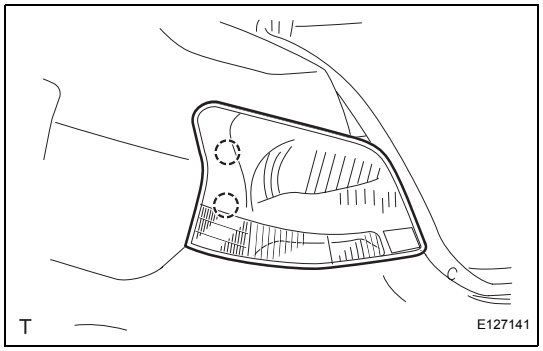

(c) Slide the rear combination light assembly toward the rear of the vehicle.

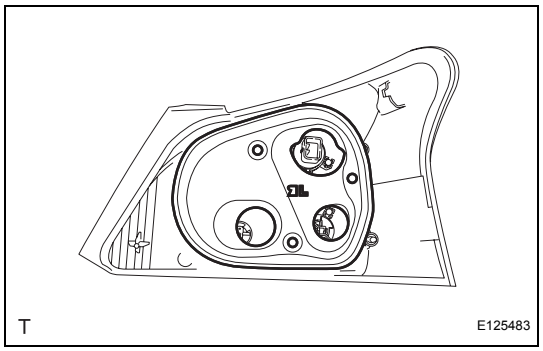

9. REMOVE REAR COMBINATION LIGHT BODY GASKET

(a) Remove the rear combination light body gasket.

NOTICE:

- **Detach the gasket if it adheres to the body.**
- **Do not reuse a removed gasket. Replace it with a new one to prevent water from entering.**

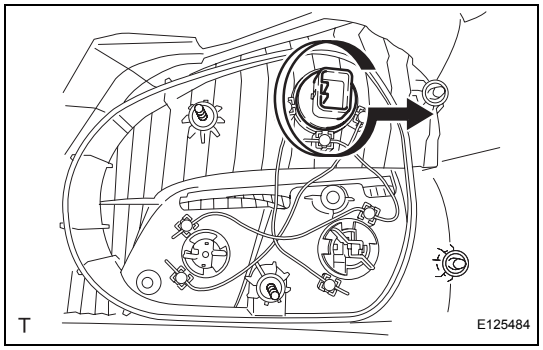

10. REMOVE TAIL LIGHT AND STOP LIGHT BULB

(a) Turn the tail light and stop light bulb socket and bulb, in the direction indicated by the arrow in the illustration, to remove them.

(b) Remove the tail light and stop light bulb from the light socket.

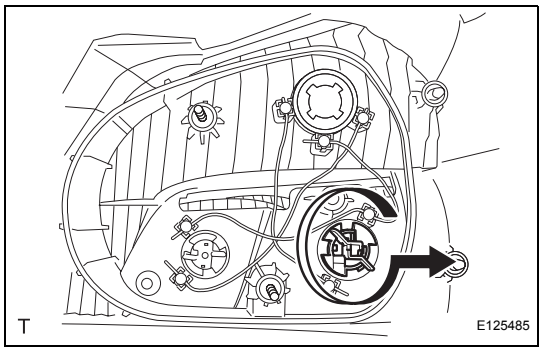

11. REMOVE TURN SIGNAL LIGHT BULB

(a) Turn the turn signal light bulb socket and bulb, in the direction indicated by the arrow in the illustration, to remove them.

(b) Remove the turn signal light bulb from the light socket.

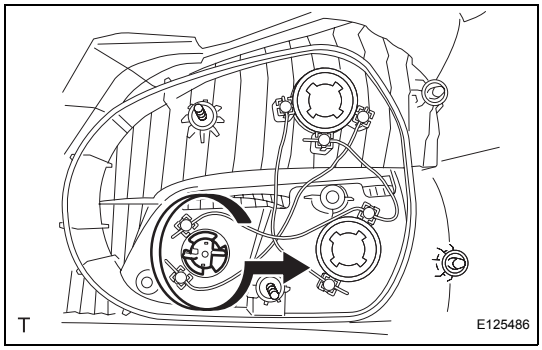

12. REMOVE BACK UP LIGHT BULB

(a) Turn the back up light bulb socket and bulb, in the direction indicated by the arrow in the illustration, to remove them.

(b) Remove the back up light bulb from the light socket.

INSTALLATION

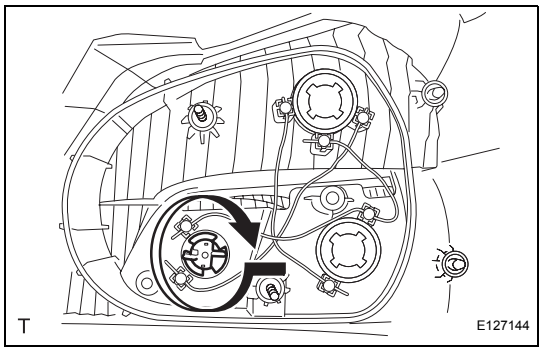

1. INSTALL BACK UP LIGHT BULB

(a) Install the back up light bulb into the socket.

(b) Turn the back up light socket, in the direction indicated by the arrow in the illustration, to install them.

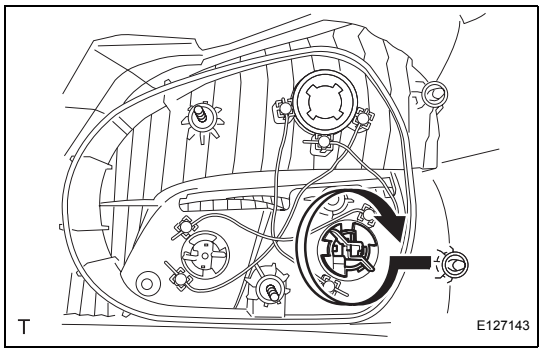

2. INSTALL TURN SIGNAL LIGHT BULB

(a) Install the turn signal light bulb into the socket.

(b) Turn the turn signal light socket, in the direction indicated by the arrow in the illustration, to install them.

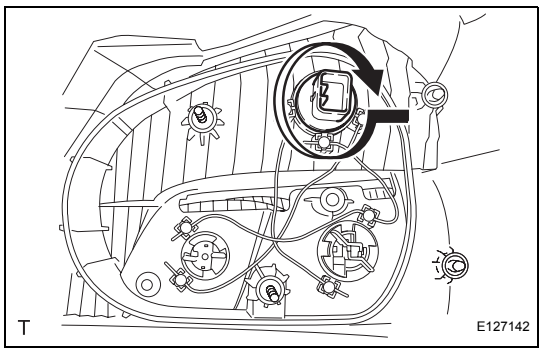

3. INSTALL TAIL LIGHT AND STOP LIGHT BULB

(a) Install the tail light and stop light bulb into the socket.

(b) Turn the tail light and stop light bulb socket, in the direction indicated by the arrow in the illustration, to install them.

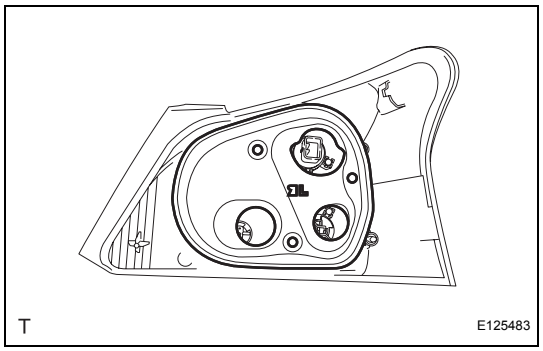

4. INSTALL REAR COMBINATION LIGHT BODY GASKET

(a) Install a new rear combination light body gasket.

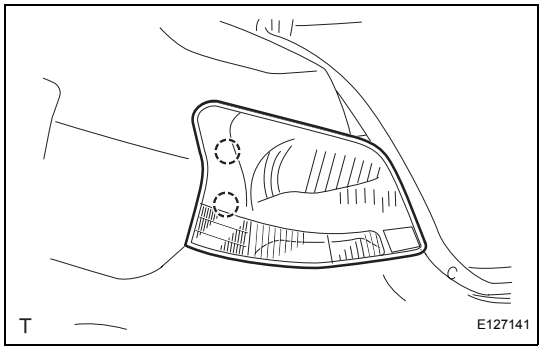

5. INSTALL REAR COMBINATION LIGHT ASSEMBLY

(a) Install the rear combination light assembly onto the vehicle.

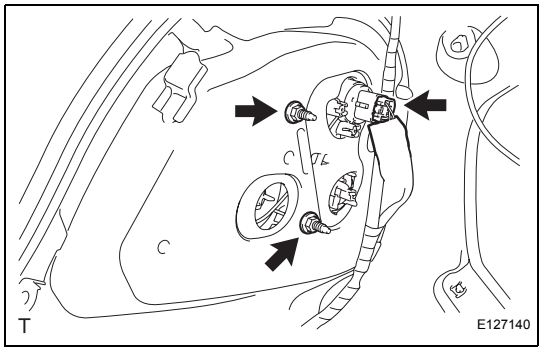

(b) Connect the connector.

(c) Install the 2 nuts.
Torque: 3.0 N*m (31 kgf*cm, 27 in.*lbf)

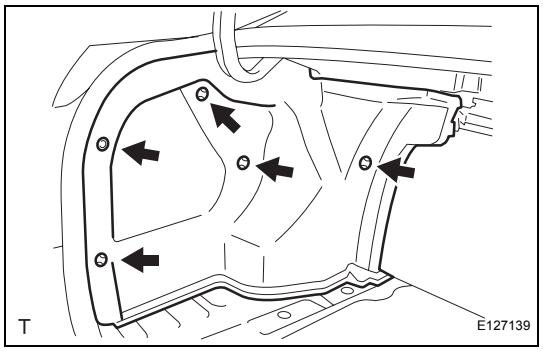

6. INSTALL LUGGAGE COMPARTMENT TRIM INNER COVER

(a) Engage the 5 clips and install the luggage compartment trim inner cover.

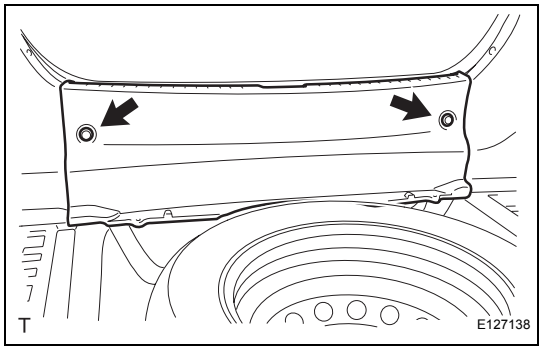

7. INSTALL REAR FLOOR FINISH PLATE

(a) Engage the 2 clips and install the rear floor finish plate.

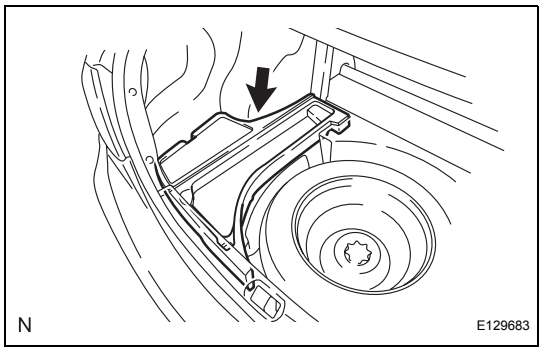

8. INSTALL DECK FLOOR BOX LH

(a) Install the deck floor box and the deck side box door.

9. INSTALL DECK FLOOR BOX RH

HINT:
Use the same procedure as for the LH side.

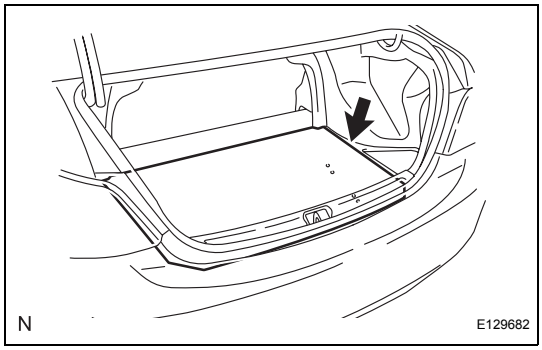

10. INSTALL SPARE WHEEL COVER ASSEMBLY

(a) Install the spare wheel cover assembly.

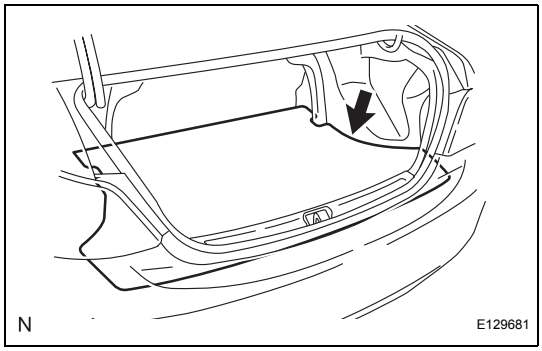

11. INSTALL LUGGAGE COMPARTMENT FLOOR MAT

(a) Install the luggage compartment floor mat.

12. CONNECT CABLE TO NEGATIVE BATTERY TERMINAL

Torque: 5.4 N*m (55 kgf*cm, 48 in.*lbf)

REAR COMBINATION LIGHT ASSEMBLY (for Hatchback)

COMPONENTS

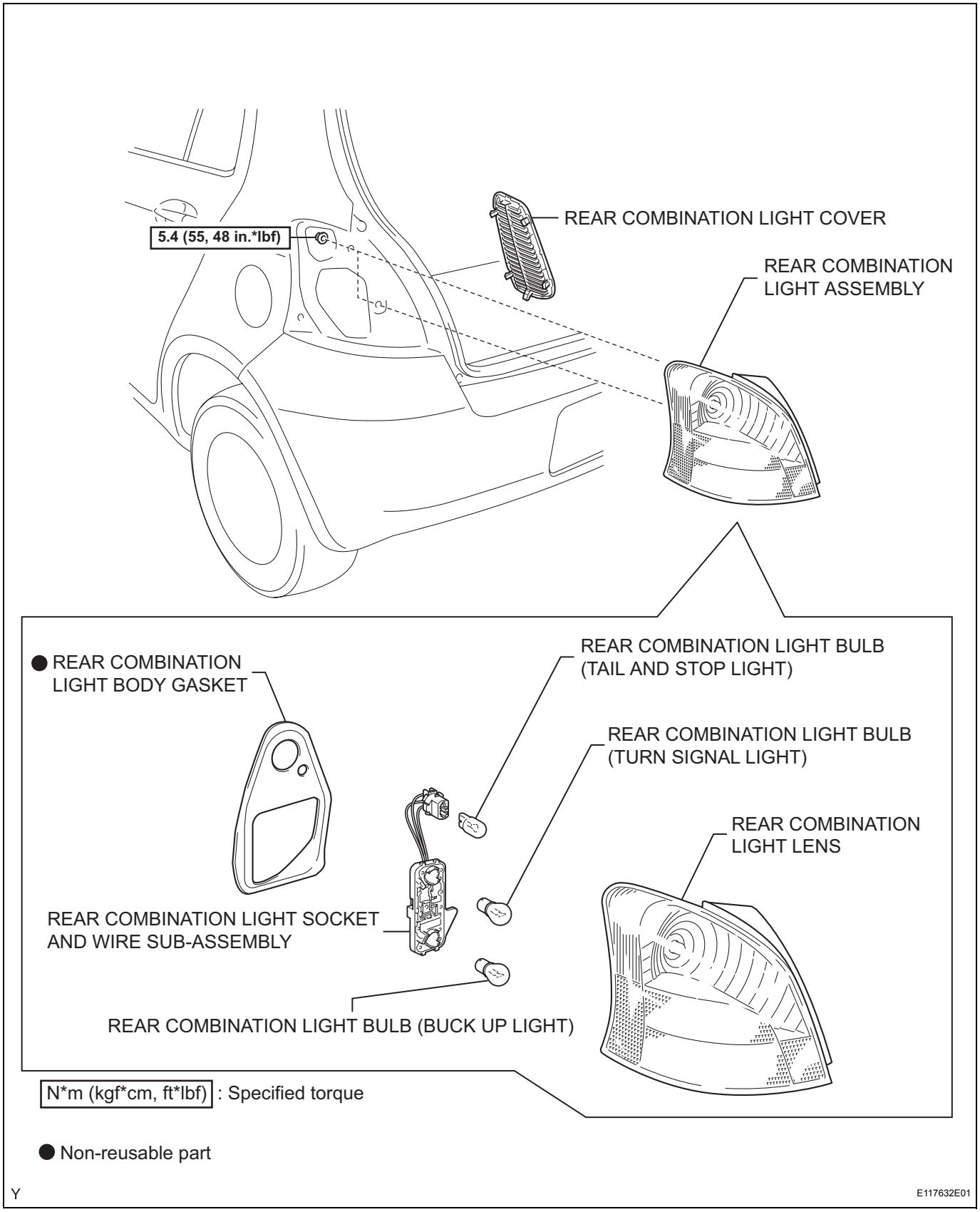

LI

REMOVAL

HINT:
- Use the same procedure for both the RH and LH sides.
- The procedure described below is for the LH side.

1. DISCONNECT CABLE FROM NEGATIVE BATTERY TERMINAL

2. REMOVE REAR COMBINATION LIGHT COVER

(a) Using a screwdriver with its tip wrapped in protective tape, disengage the 6 claws and remove the rear combination light cover.

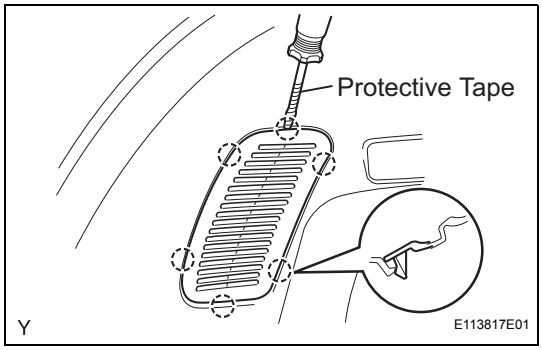

3. REMOVE REAR COMBINATION LIGHT ASSEMBLY

(a) Remove the 2 nuts.

(b) Disconnect the connector.

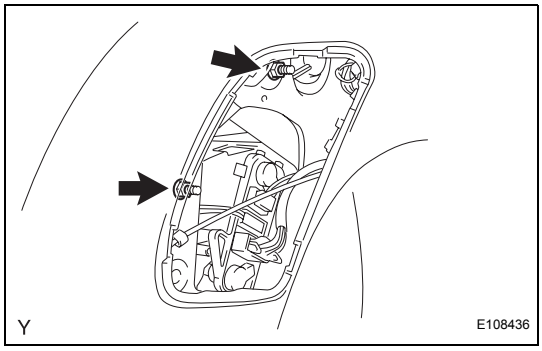

(c) Slide the tail light (rear combination light) toward the rear of the vehicle.

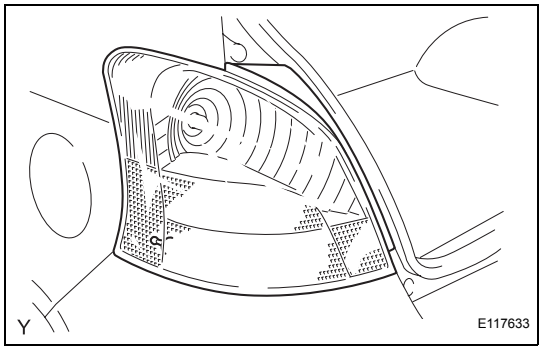

4. REMOVE REAR COMBINATION LIGHT BODY GASKET

(a) Remove the rear combination light body gasket.

NOTICE:
- **Detach the gasket if it adheres to the body.**
- **Do not reuse a removed gasket. Replace it with a new one to prevent water from entering.**

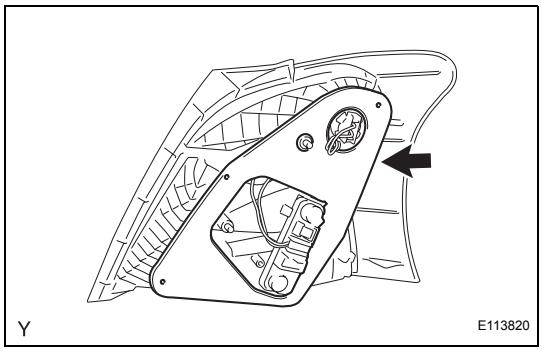

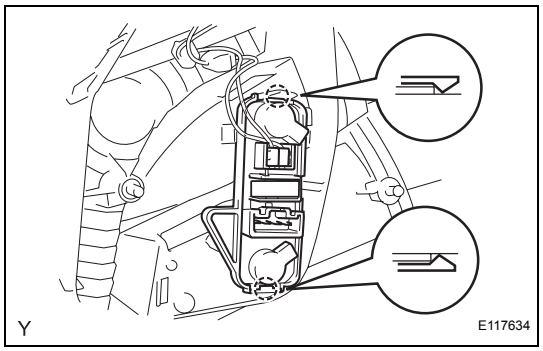

5. REMOVE REAR COMBINATION LIGHT BULB

(a) Disengage the fitting of the rib.

(b) Disengage the claw on the upper side, then on the lower side.

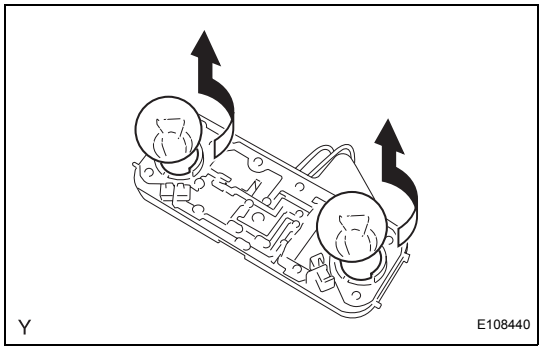

(c) Turn the 2 rear combination light bulbs, in the direction indicated by the arrows in the illustration, to remove them.

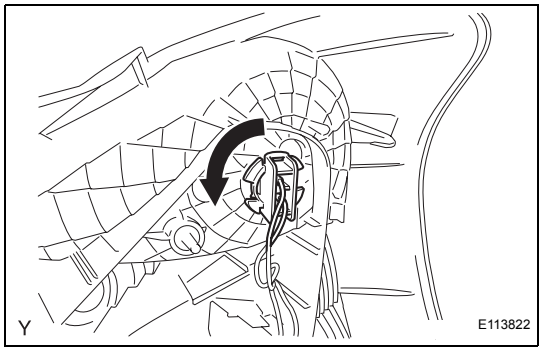

(d) Turn the rear combination light socket and wire, in the direction indicated by the arrow in the illustration, to remove it.

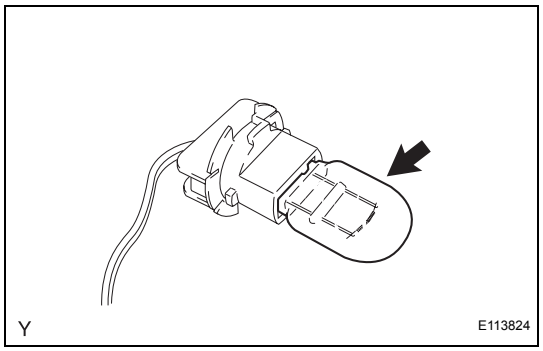

(e) Remove the rear combination light bulb from the socket and wire.

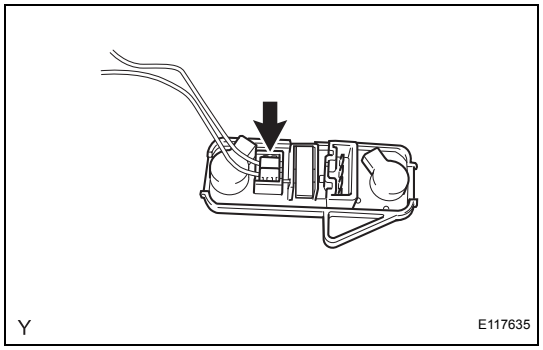

6. REMOVE REAR COMBINATION LIGHT SOCKET AND WIRE SUB-ASSEMBLY

(a) Disconnect the connector and remove the rear combination light socket and wire.

LI

INSTALLATION

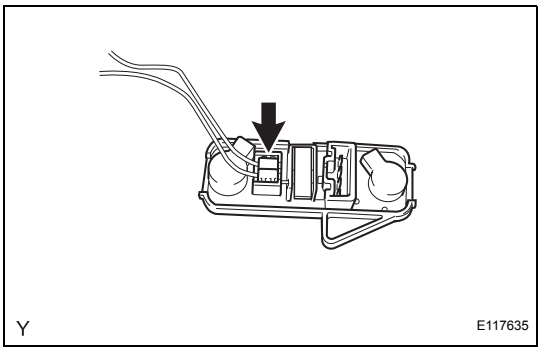

1. INSTALL REAR COMBINATION LIGHT SOCKET AND WIRE SUB-ASSEMBLY

(a) Connect the connector and install the rear combination light socket and wire.

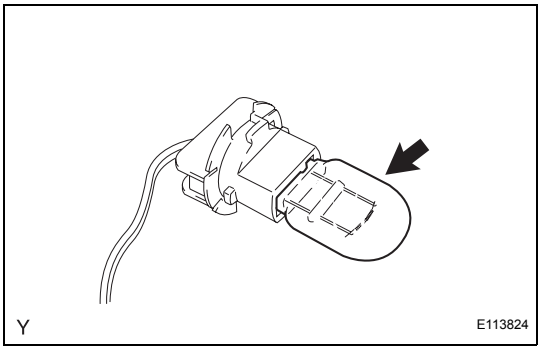

2. INSTALL REAR COMBINATION LIGHT BULB

(a) Install the rear combination light bulb into the light socket.

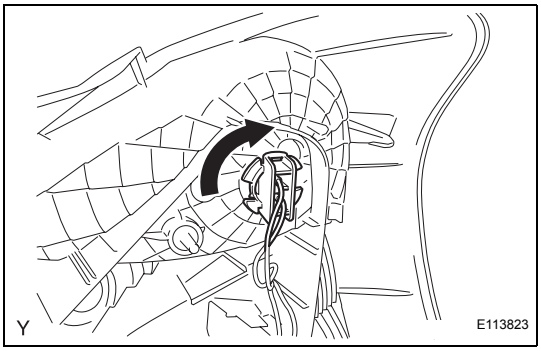

(b) Turn the rear combination light bulb socket and bulb, in the direction indicated by the arrow in the illustration, to install them.

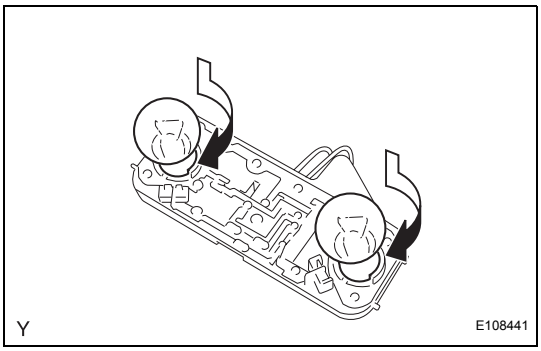

(c) Turn the 2 rear combination light bulbs, in the direction indicated by the arrows in the illustration, to install them.

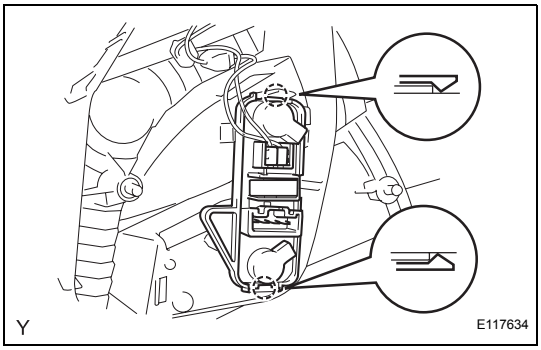

(d) Engage the 2 claws and install the rear combination light socket and wire.

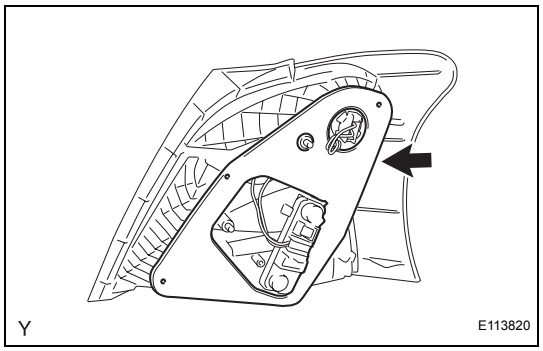

3. INSTALL REAR COMBINATION LIGHT BODY GASKET

(a) Install a new rear combination light body gasket.

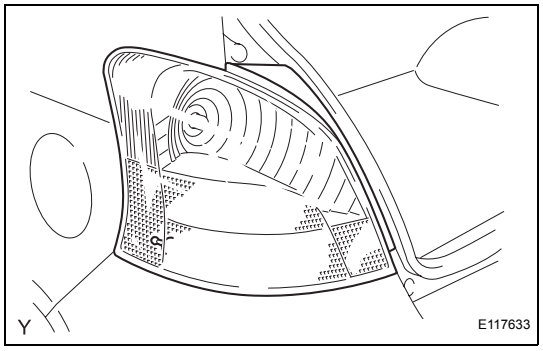

4. INSTALL REAR COMBINATION LIGHT ASSEMBLY

(a) Install the rear combination light assembly onto the vehicle.

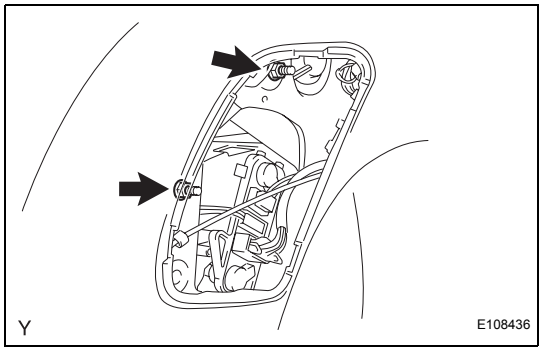

(b) Connect the connector.

(c) Install the 2 nuts.
Torque: 5.4 N*m (55 kgf*cm, 48 in.*lbf)

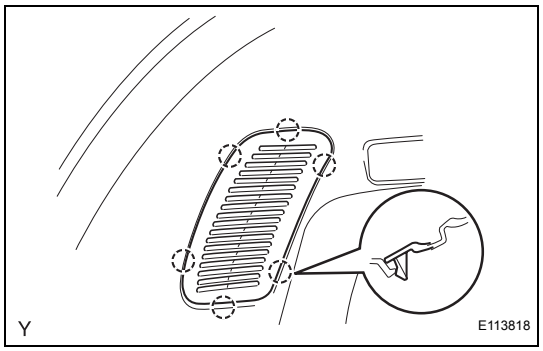

5. INSTALL REAR COMBINATION LIGHT COVER

(a) Engage the 6 claws and install the rear combination light cover.

6. CONNECT CABLE TO NEGATIVE BATTERY TERMINAL
Torque: 5.4 N*m (55 kgf*cm, 48 in.*lbf)

LI

LICENSE PLATE LIGHT ASSEMBLY (for Sedan)

COMPONENTS

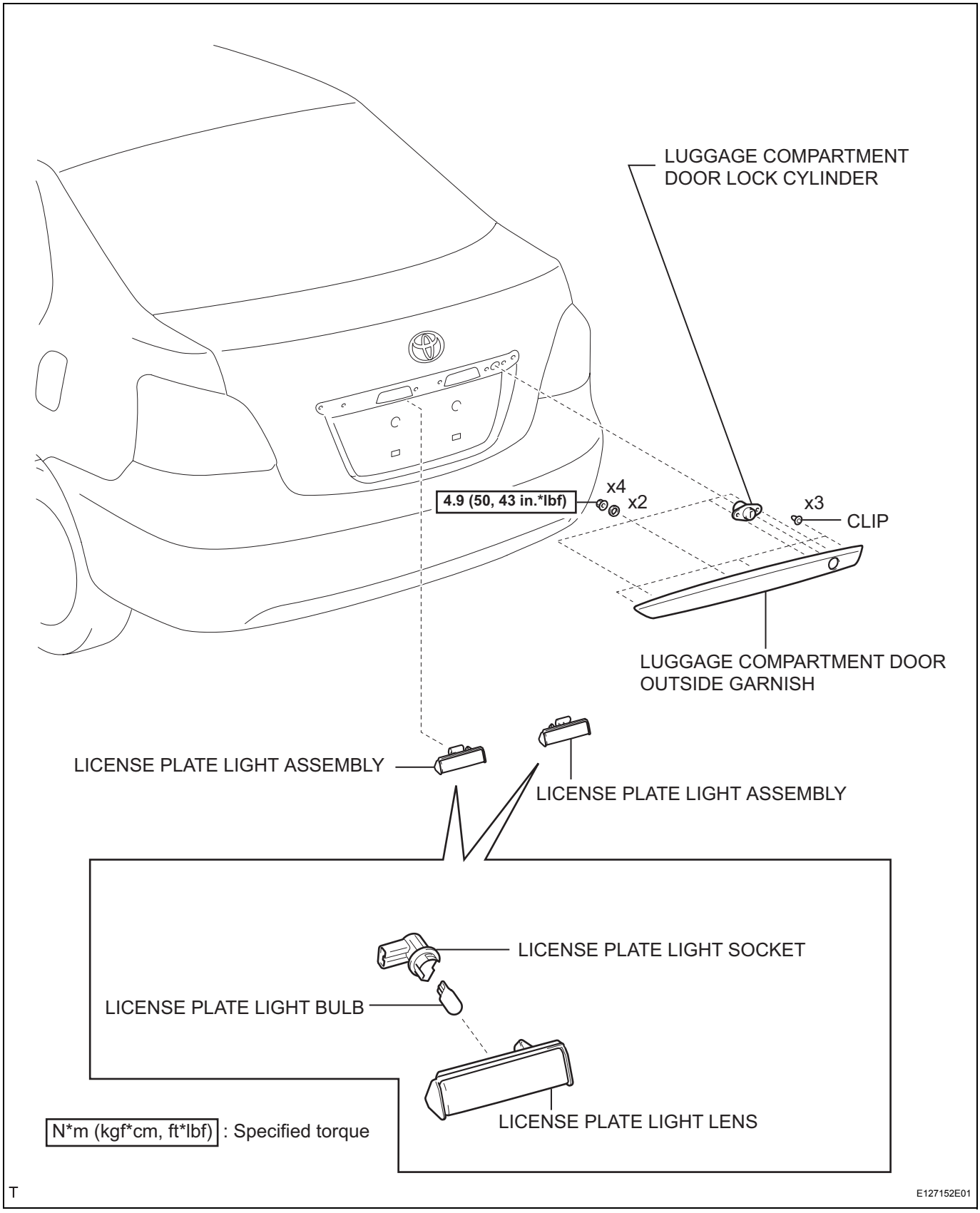

LI

REMOVAL

1. DISCONNECT CABLE FROM NEGATIVE BATTERY TERMINAL

2. REMOVE LUGGAGE COMPARTMENT DOOR LOCK CYLINDER

(a) Remove the snap ring in the direction indicated by the arrow and remove the luggage compartment door lock link.

(b) Remove the 2 nuts and the luggage compartment door lock cylinder.

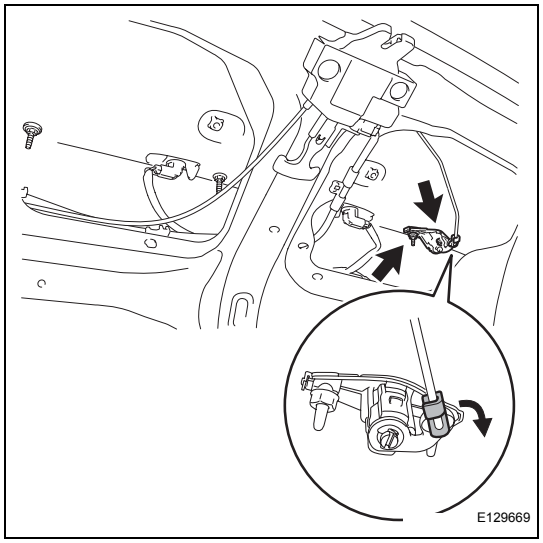

3. REMOVE LUGGAGE COMPARTMENT DOOR OUTSIDE GARNISH

(a) Disconnect the 2 connectors.

(b) Remove the 2 nuts.

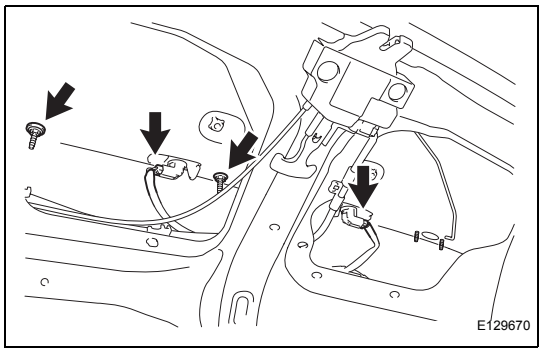

(c) Disengage the 3 claws and remove the luggage compartment door outside garnish.

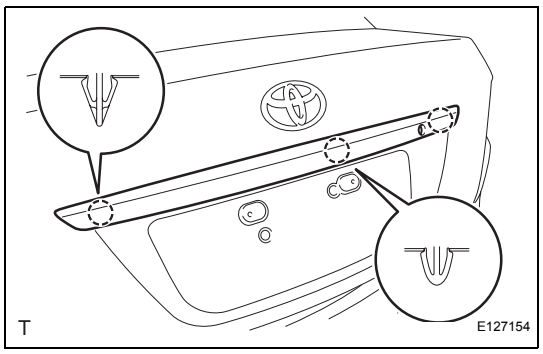

4. REMOVE LICENSE PLATE LIGHT ASSEMBLY

(a) Pull the license plate light assembly in the direction indicated by arrow 1, shown in the illustration. Disengage claw B by pulling claw A toward you while flexing it and remove the license plate light assembly.

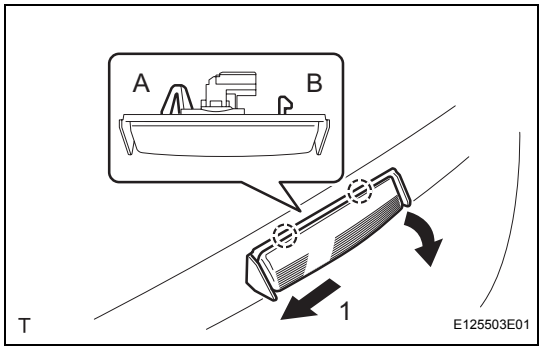

LI

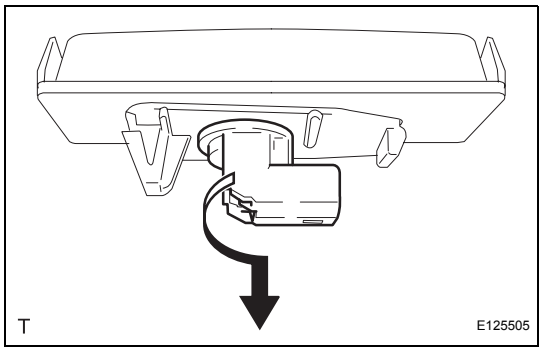

(b) Turn the license plate light socket and bulb, in the directions indicated by the arrow in the illustration, to remove them.
(c) Remove the license plate light bulb from the light socket.

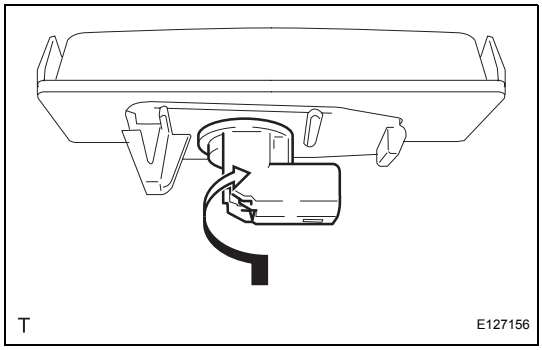

INSTALLATION

1. INSTALL LICENSE PLATE LIGHT ASSEMBLY

(a) Install the license plate light bulb into the light socket.
(b) Turn the license plate light bulb socket and bulb, in the directions indicated by the arrow in the illustration, to install them.

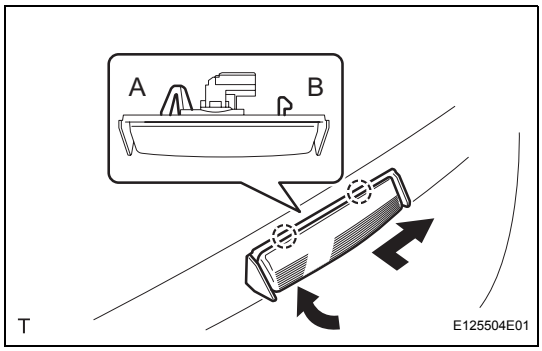

(c) Engage claw A and claw B, and install the license plate light assembly.

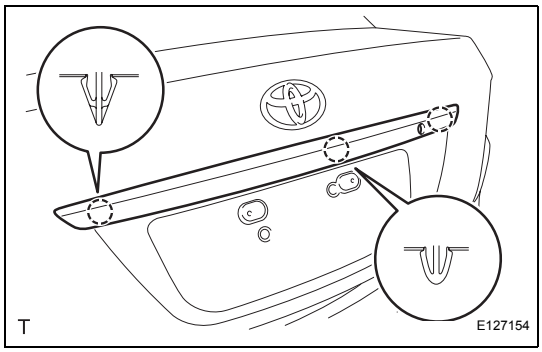

2. INSTALL LUGGAGE COMPARTMENT DOOR OUTSIDE GARNISH

(a) Engage the 3 claws and install the luggage compartment door outside garnish.

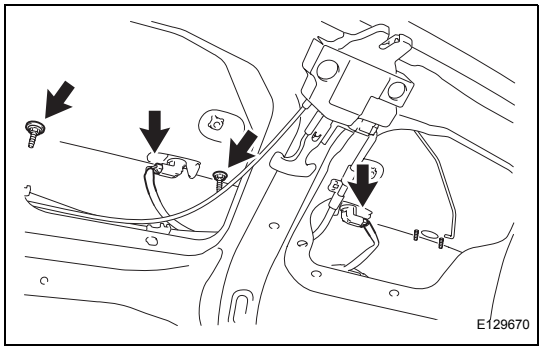

(b) Connect the 2 connectors.
(c) Install the luggage compartment door outside garnish with the 2 nuts.
Torque: 4.9 N*m (50 kgf*cm, 43 in.*lbf)

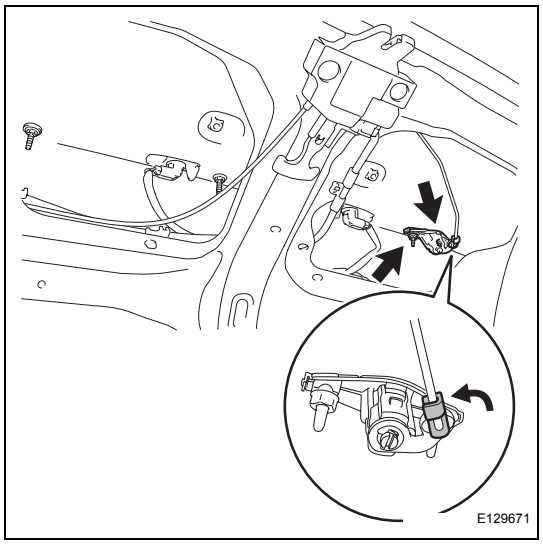

3. INSTALL LUGGAGE COMPARTMENT DOOR LOCK CYLINDER

(a) Install the luggage compartment door lock cylinder with the 2 nuts.
Torque: 4.9 N*m (50 kgf*cm, 43 in.*lbf)

(b) Install the luggage compartment door lock link.

4. CONNECT CABLE TO NEGATIVE BATTERY TERMINAL
Torque: 5.4 N*m (55 kgf*cm, 48 in.*lbf)

LICENSE PLATE LIGHT ASSEMBLY (for Hatchback)

COMPONENTS

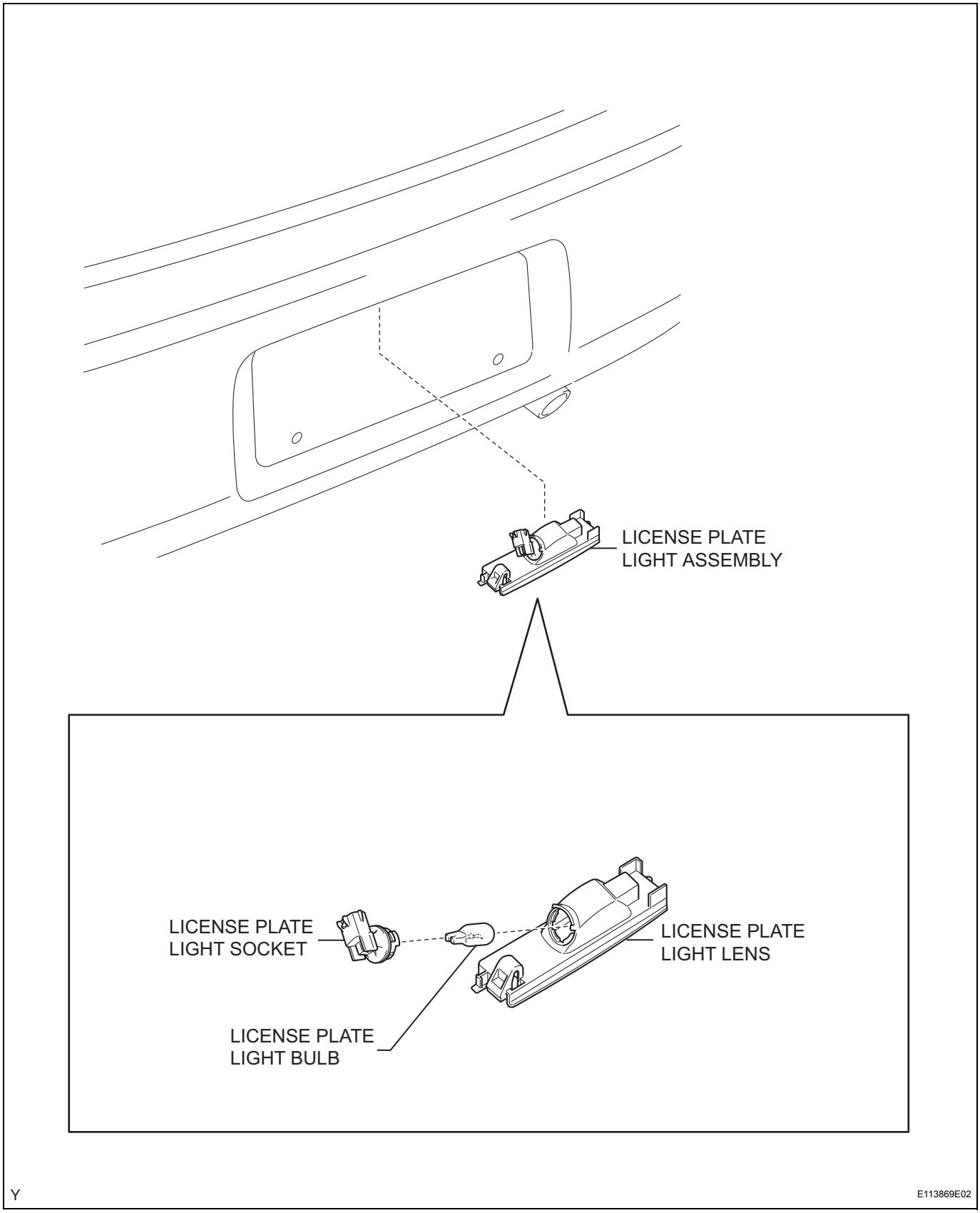

REMOVAL

1. DISCONNECT CABLE FROM NEGATIVE BATTERY TERMINAL

2. REMOVE LICENSE PLATE LIGHT ASSEMBLY

(a) Insert a screwdriver in the position shown in the illustration and move the license plate light in the direction shown in the illustration to disengage the claw.

(b) Disconnect the connector, then remove the license plate light.

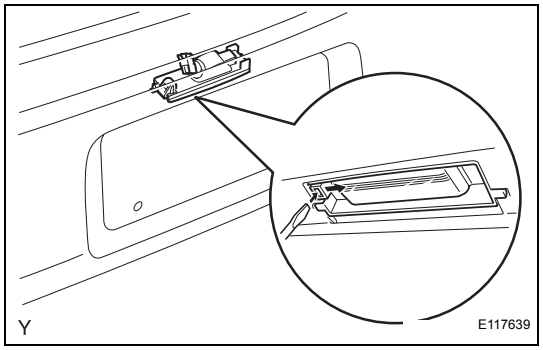

(c) Turn the license plate light socket and bulb, in the direction indicated by the arrow in the illustration, to remove them.

(d) Remove the license plate light bulb from the light socket.

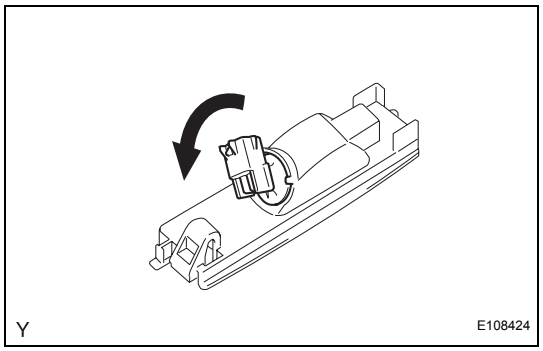

INSTALLATION

1. INSTALL LICENSE PLATE LIGHT ASSEMBLY

(a) Install the license plate light bulb into the light socket.

(b) Turn the license plate light bulb socket and bulb, in the direction indicated by the arrow in the illustration, to install them.

(c) Connect the connector.

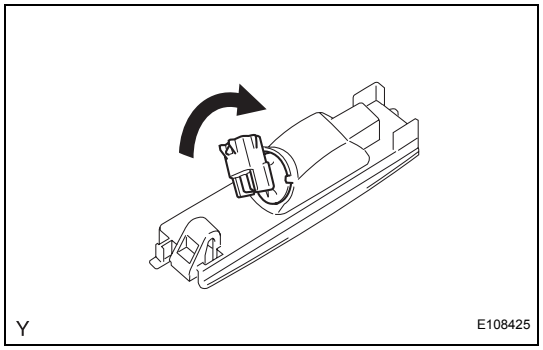

(d) Engage the claw and install the license plate light.

2. CONNECT CABLE TO NEGATIVE BATTERY TERMINAL
Torque: 5.4 N*m (55 kgf*cm, 48 in.*lbf)

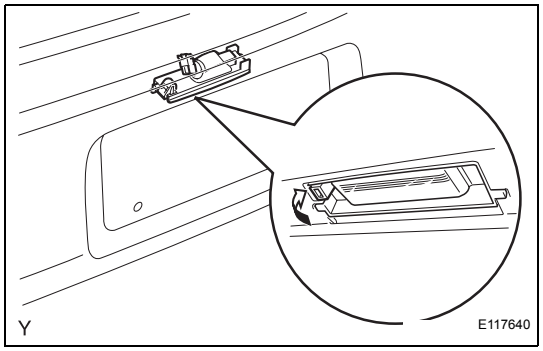

LI

HIGH MOUNTED STOP LIGHT ASSEMBLY (for Sedan with Rear Spoiler)

COMPONENTS

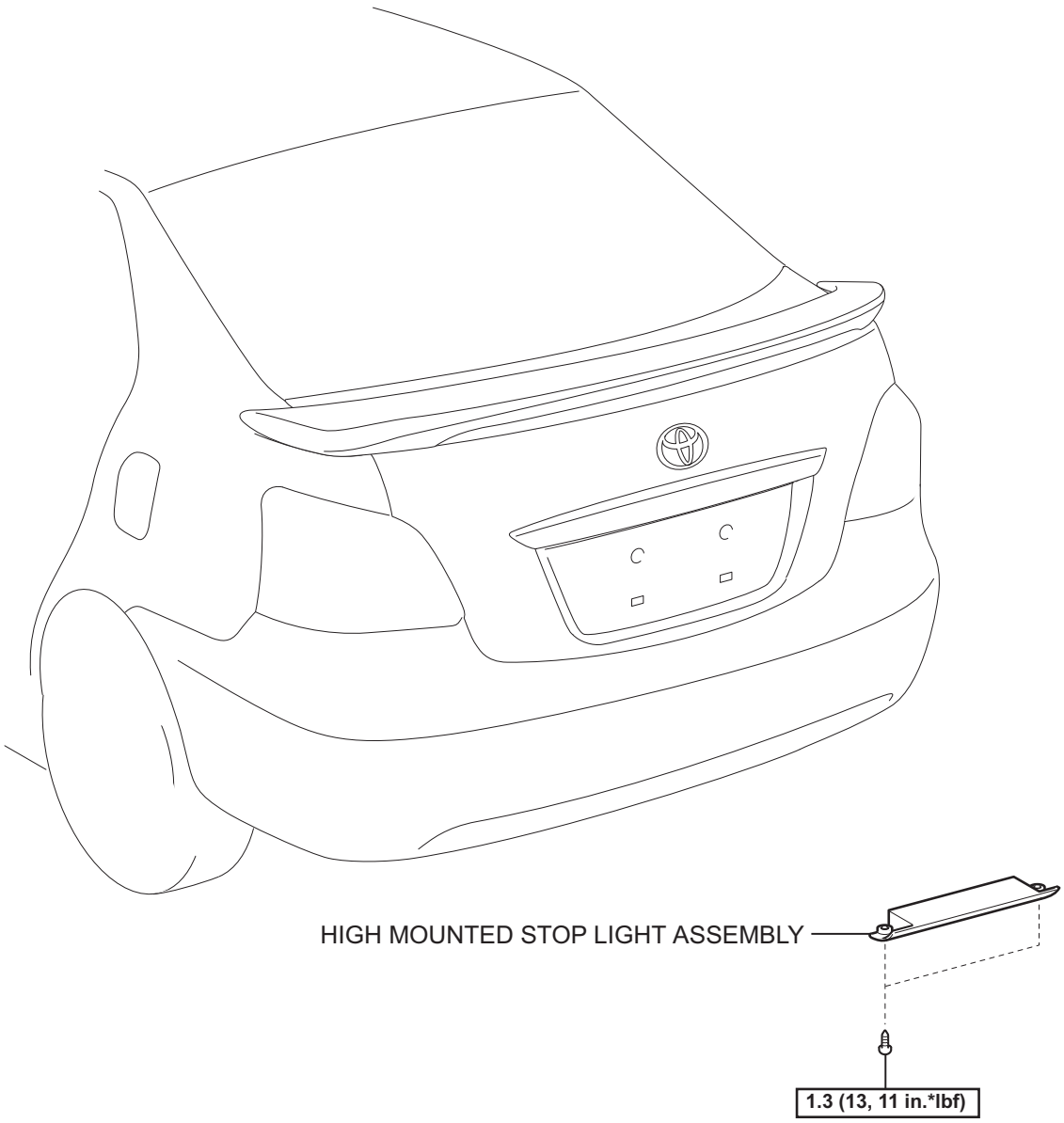

N*m (kgf*cm, ft*lbf) : Specified torque

T

E125511E01

REMOVAL

1. DISCONNECT CABLE FROM NEGATIVE BATTERY TERMINAL

2. REMOVE HIGH MOUNTED STOP LIGHT ASSEMBLY

(a) Remove the 2 bolts and the high mounted stop light.

(b) Disconnect the connector.

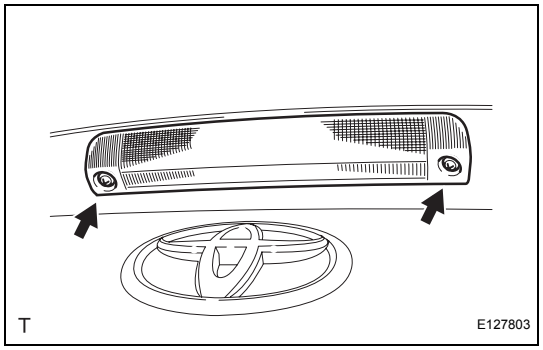

INSTALLATION

1. INSTALL HIGH MOUNTED STOP LIGHT ASSEMBLY

(a) Connect the connector.

(b) Install the high mounted stop light with the 2 bolts.
Torque: 1.3 N*m (13 kgf*cm, 11 in.*lbf)

2. CONNECT CABLE TO NEGATIVE BATTERY TERMINAL
Torque: 5.4 N*m (55 kgf*cm, 48 in.*lbf)

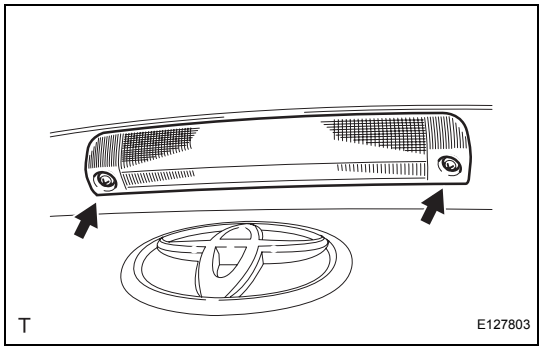

HIGH MOUNTED STOP LIGHT ASSEMBLY (for Sedan without Rear Spoiler)

COMPONENTS

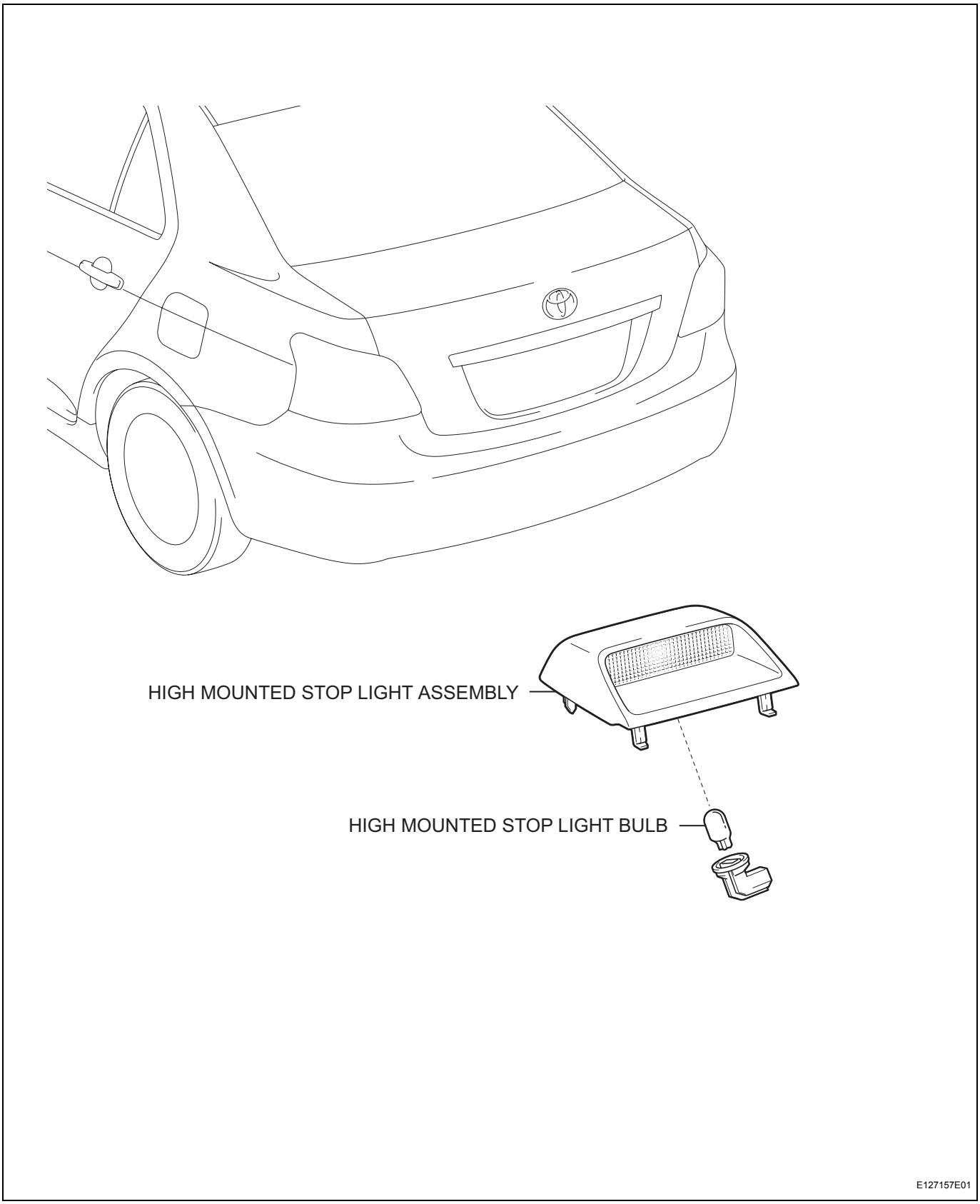

REMOVAL

1. DISCONNECT CABLE FROM NEGATIVE BATTERY TERMINAL

2. REMOVE HIGH MOUNTED STOP LIGHT ASSEMBLY

(a) Disengage the 2 claws.

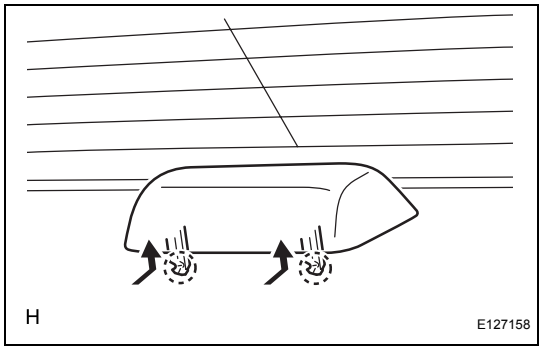

(b) Disengage the 2 claws.

(c) Disconnect the connector and remove the high mounted stop light assembly.

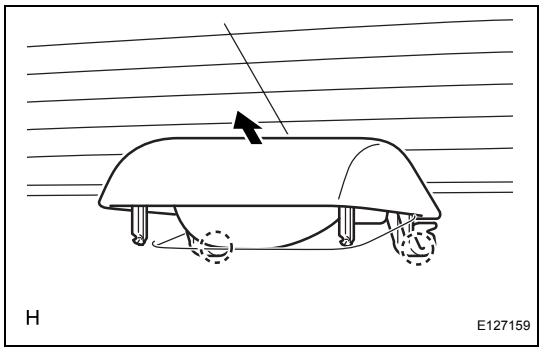

3. REMOVE HIGH MOUNTED STOP LIGHT BULB

(a) Turn the high mounted stop light socket and bulb, in the direction indicated by the arrow in the illustration, to remove them.

(b) Remove the high mounted stop light bulb from the light socket.

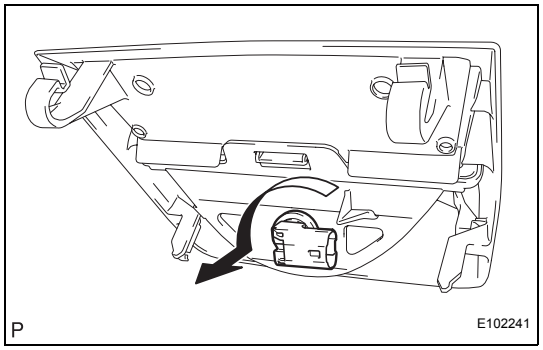

INSTALLATION

1. INSTALL HIGH MOUNTED STOP LIGHT BULB

(a) Install the high mounted stop light bulb into the light socket.

(b) Turn the high mounted stop light bulb socket and bulb, in the direction indicated by the arrow in the illustration, to install them.

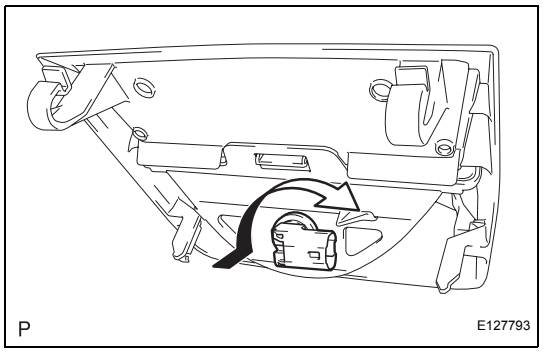

LI

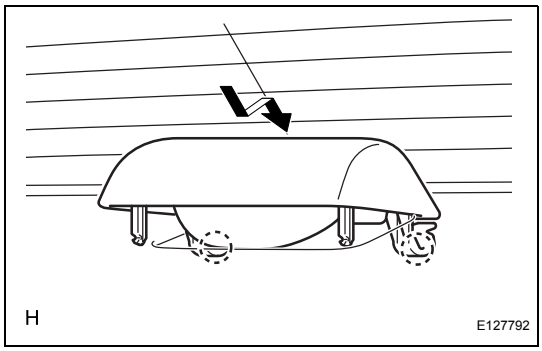

2. INSTALL HIGH MOUNTED STOP LIGHT ASSEMBLY

(a) Connect the connector.

(b) Engage the 4 claws and install the high mounted stop light assembly.

3. CONNECT CABLE TO NEGATIVE BATTERY TERMINAL

Torque: 5.4 N*m (55 kgf*cm, 48 in.*lbf)

HIGH MOUNTED STOP LIGHT ASSEMBLY (for Hatchback)

COMPONENTS

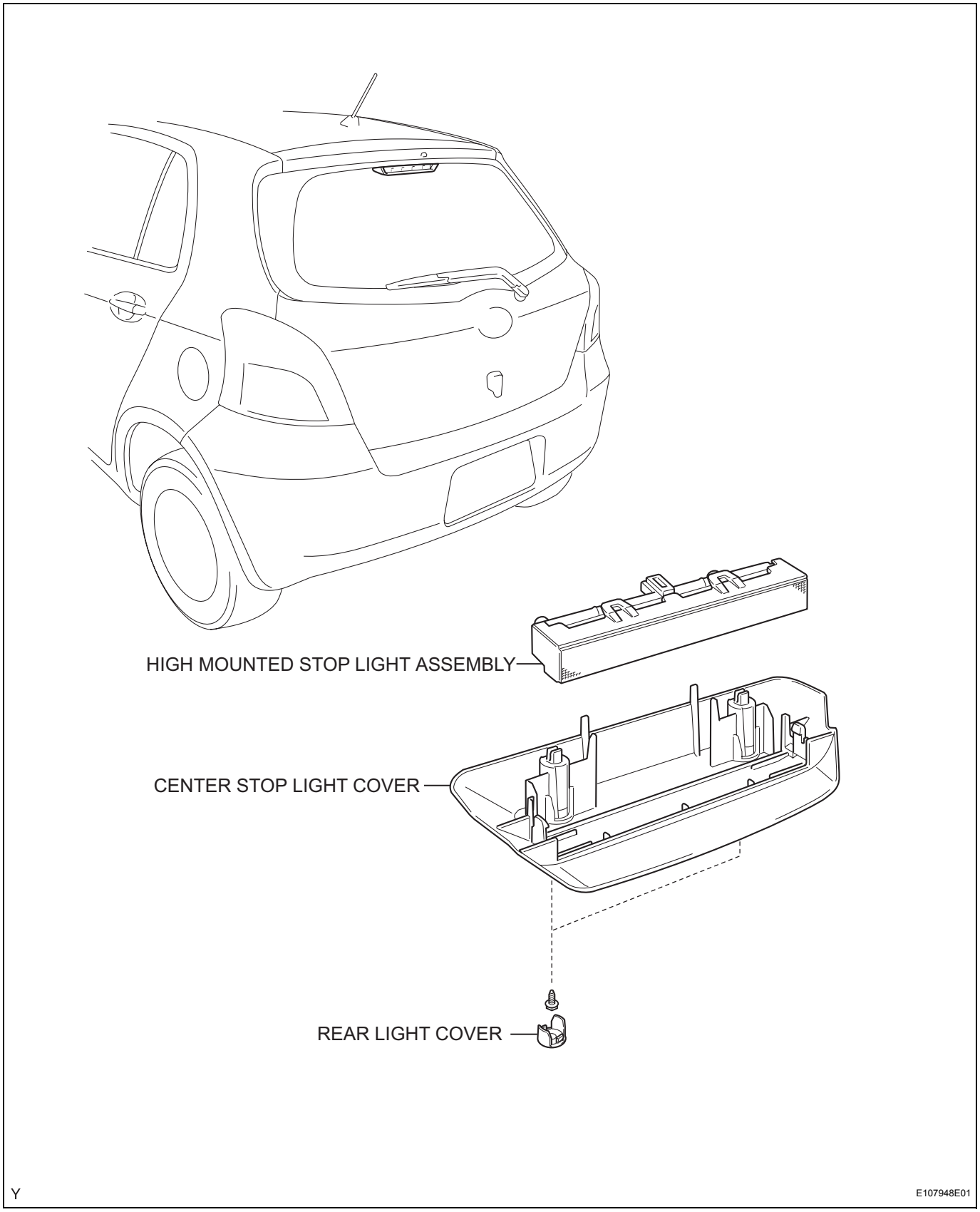

REMOVAL

1. DISCONNECT CABLE FROM NEGATIVE BATTERY TERMINAL

2. REMOVE CENTER STOP LIGHT COVER

(a) Using a screwdriver with its tip wrapped in protective tape, disengage the 4 claws and remove the 2 rear light covers.

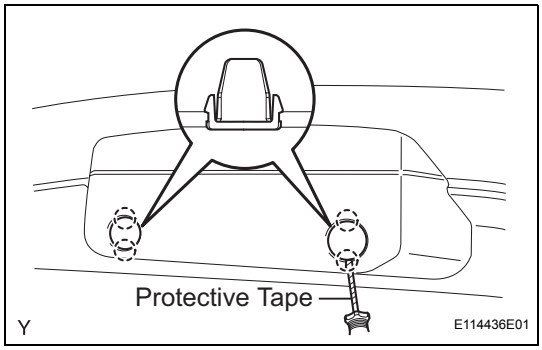

(b) Remove the 2 screws.

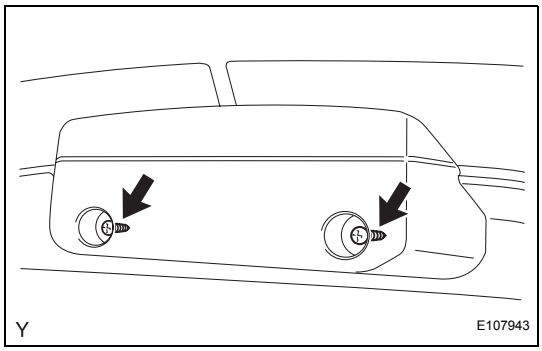

(c) Disengage the 2 claws.
(d) Disconnect the connector and remove the center stop light cover.

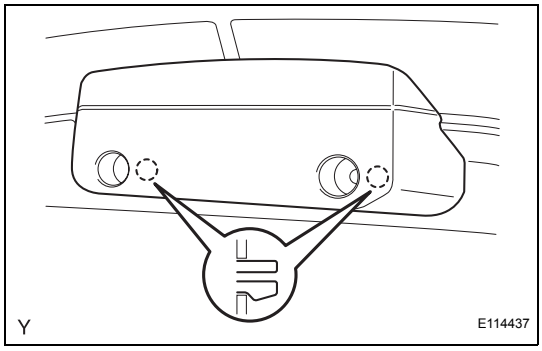

3. REMOVE HIGH MOUNTED STOP LIGHT ASSEMBLY

(a) Disengage the 2 claws and remove the high mounted stop light.

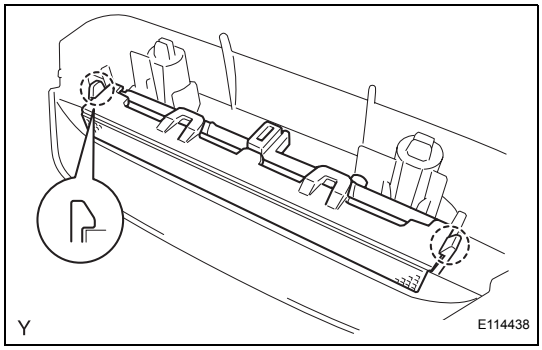

INSTALLATION

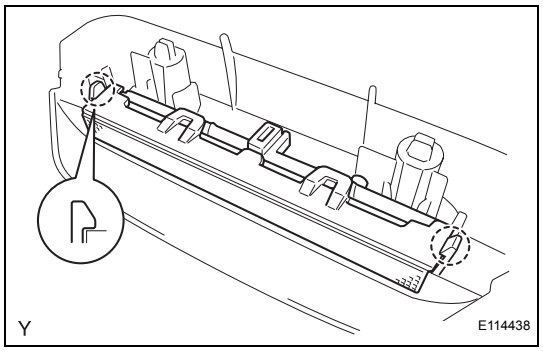

1. INSTALL HIGH MOUNTED STOP LIGHT ASSEMBLY

(a) Engage the 2 claws and install the high mounted stop light.

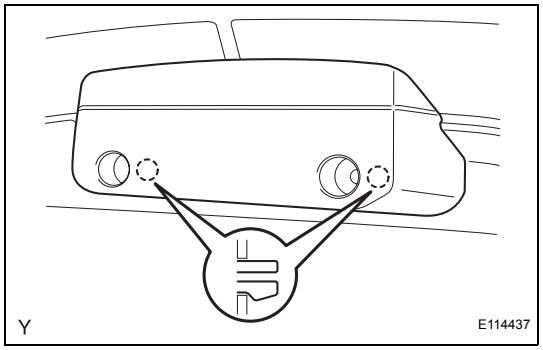

2. INSTALL CENTER STOP LIGHT COVER

(a) Connect the connector.

(b) Engage the 2 claws.

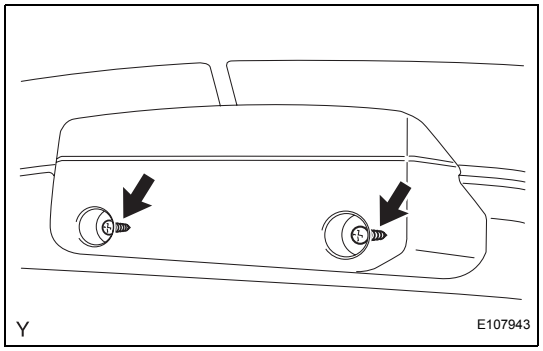

(c) Install the center stop light cover with the 2 screws.
NOTICE:
When reusing the center stop light cover, replace the screws with 90159-60303 screws to avoid insecure installation.

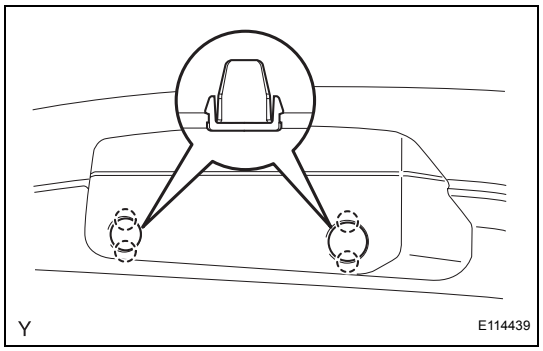

(d) Engage the 4 claws and install the rear light cover.

3. CONNECT CABLE TO NEGATIVE BATTERY TERMINAL
Torque: 5.4 N*m (55 kgf*cm, 48 in.*lbf)

MAP LIGHT ASSEMBLY

COMPONENTS

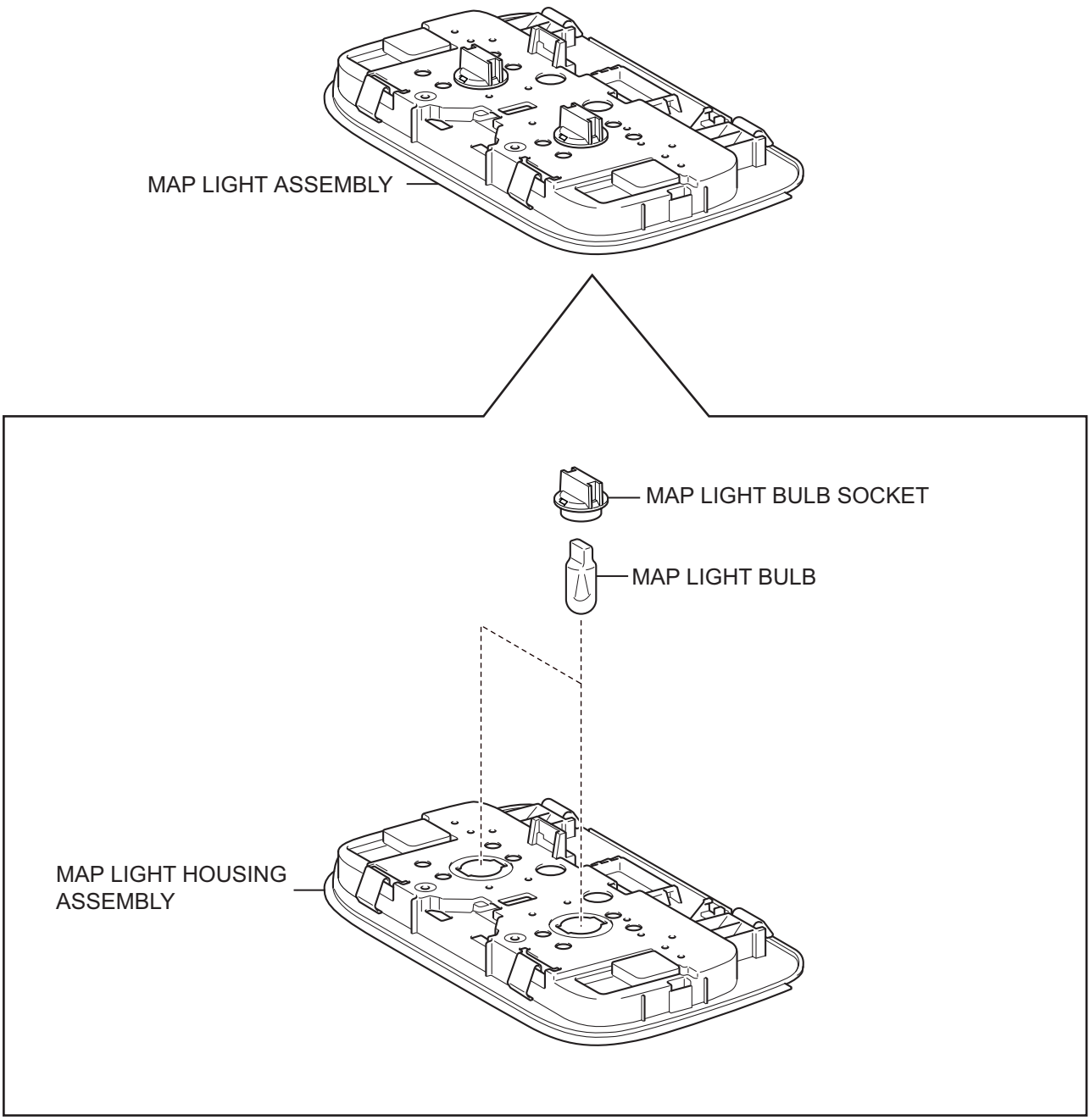

Y

E114424E01

REMOVAL

1. DISCONNECT CABLE FROM NEGATIVE BATTERY TERMINAL

2. REMOVE MAP LIGHT ASSEMBLY

(a) Using a roof moulding remover, disengage the 4 claws.

(b) Disconnect the connector, and remove the map light.

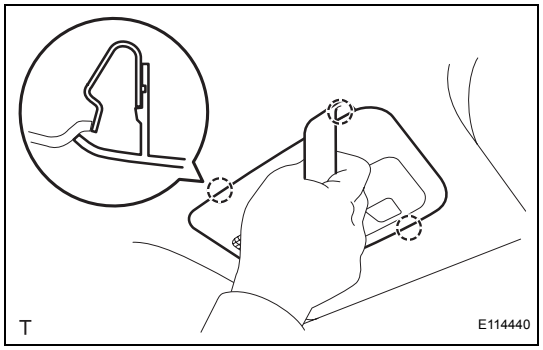

3. REMOVE MAP LIGHT BULB

(a) Turn the 2 map light sockets and bulbs, in the direction indicated by the arrows in the illustration, to remove them.

(b) Remove the 2 map light bulbs from the light socket.

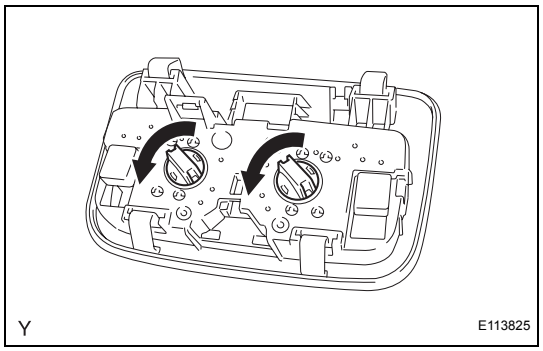

INSPECTION

1. INSPECT MAP LIGHT ASSEMBLY

(a) Check the resistance.

(1) Using an ohmmeter, measure the resistance and check the results in accordance with the value(s) in the table below.

Standard Resistance

Tester Connection	Condition	Specified Condition
1 - 2	OFF	10 kΩ or higher
1 - 2	Drivers switch ON	Below 1 Ω
1 - 2	Passengers switch OFF	Below 1 Ω

If the result is not as specified, replace the map light.

(b) Check the light operation.

(1) Connect the positive (+) battery lead to terminal 1 and the negative (-) battery lead to terminal 2, then check that the light illuminates.

standard:

Light illuminates.

If the light does not illuminate, replace the bulb.

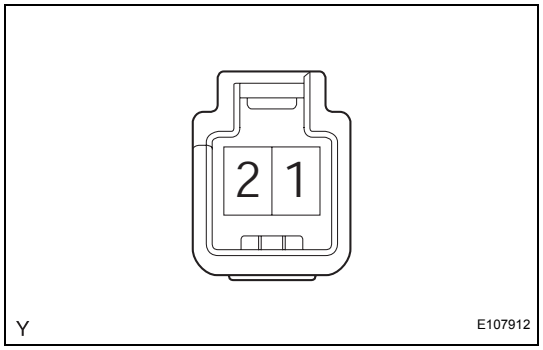

LI

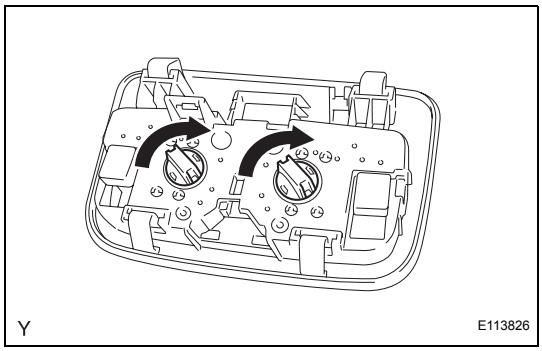

INSTALLATION

1. INSTALL MAP LIGHT BULB

(a) Install the map light bulb into the light socket.

(b) Turn the map light bulb socket and bulb, in the direction indicated by the arrows in the illustration.

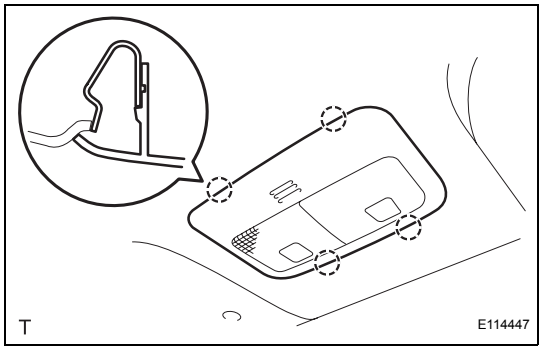

2. INSTALL MAP LIGHT ASSEMBLY

(a) Connect the connector.

(b) Engage the 4 claws and install the map light.

3. CONNECT CABLE TO NEGATIVE BATTERY TERMINAL

Torque: 5.4 N*m (55 kgf*cm, 48 in.*lbf)

ROOM LIGHT ASSEMBLY

COMPONENTS

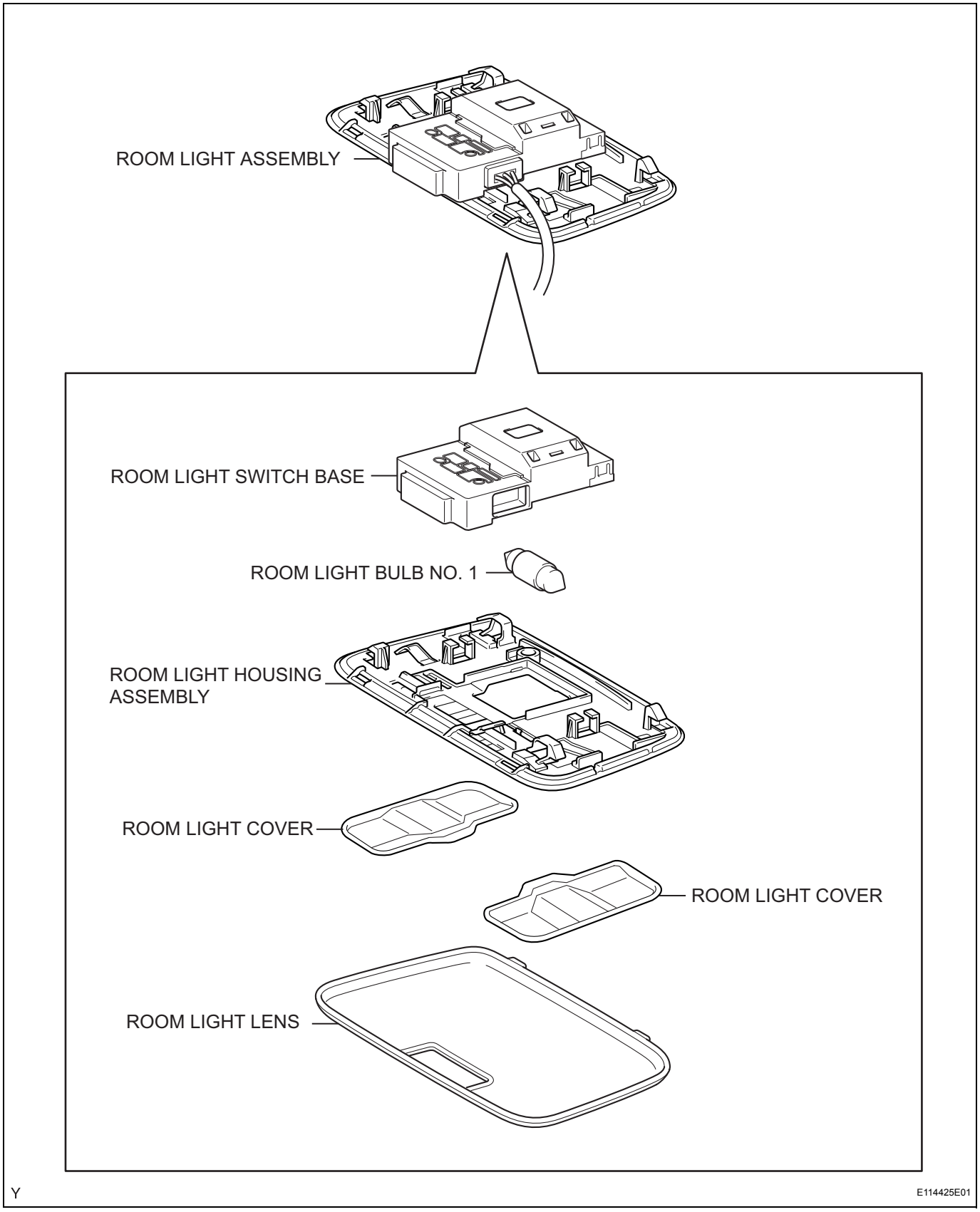

REMOVAL

1. DISCONNECT CABLE FROM NEGATIVE BATTERY TERMINAL

2. REMOVE ROOM LIGHT ASSEMBLY

(a) Using a screwdriver with its tip wrapped in protective tape, disengage the 4 claws and remove the room light lens.

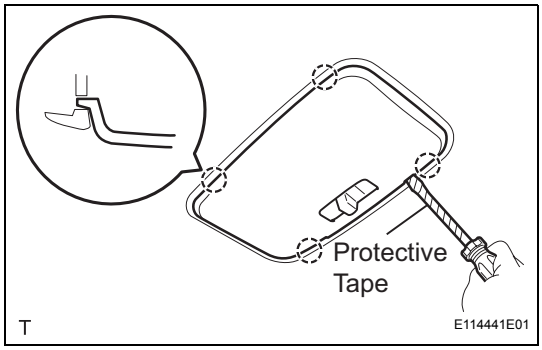

(b) Using a screwdriver with its tip wrapped in protective tape, disengage the 4 claws and remove the 2 covers.

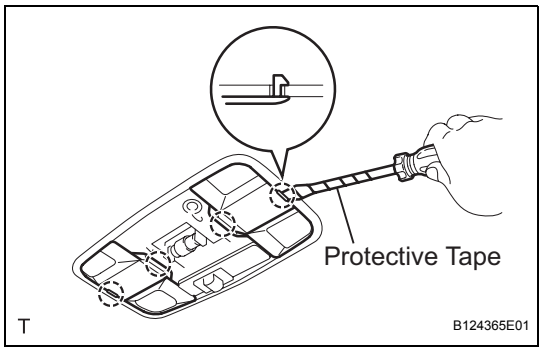

(c) Using a screwdriver with its tip wrapped in protective tape, disengage the 4 claws.

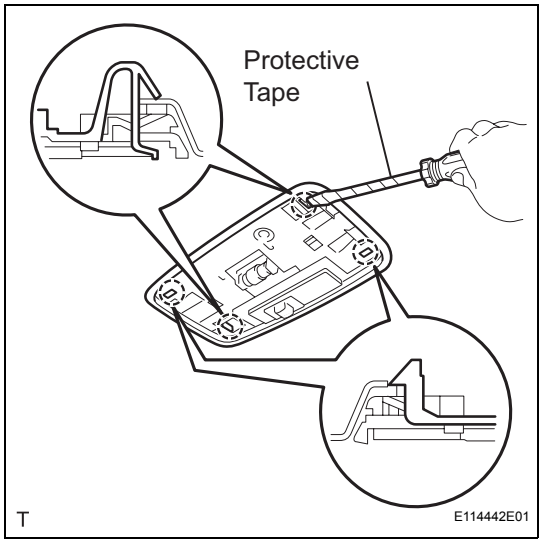

(d) Disengage the roof wire from the claw of the room light.

(e) Using a screwdriver with its tip wrapped in protective tape, disengage the 4 claws and remove the room light switch base.

(f) Remove room light bulb No. 1.

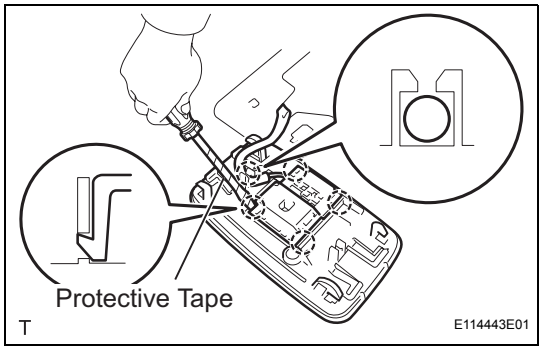

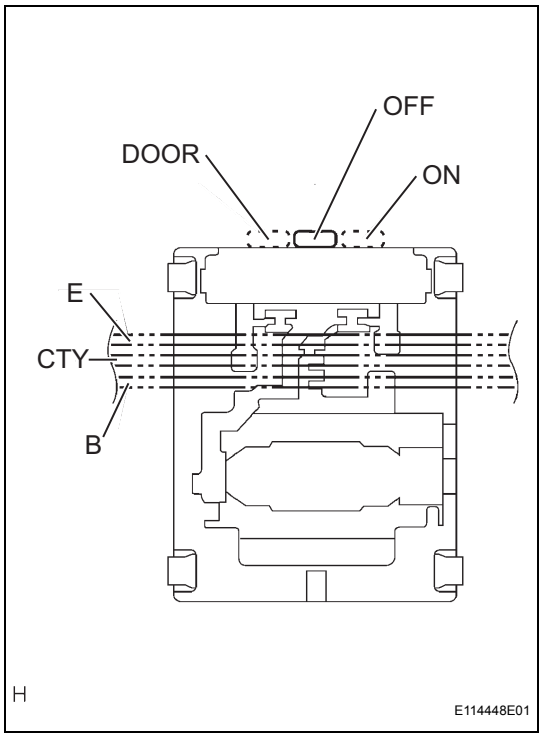

INSPECTION

1. INSPECT ROOM LIGHT ASSEMBLY

(a) Check the resistance.

(1) Using an ohmmeter, measure the resistance and check the results in accordance with the value(s) in the table below.

Standard Resistance

Tester Connection	Condition	Specified Condition
CTY - B - E	OFF	10 kΩ or higher
CTY - B	DOOR	Below 1 Ω
B - E	ON	Below 1 Ω

If the result is not as specified, replace the room light.

(b) Check the light operation.

(1) Connect the positive (+) battery lead to terminal B and the negative (-) battery lead to terminal CTY, then check that the light illuminates when the switch is in the DOOR position.

Standard:

Light illuminates.

If the light does not come on, replace the bulb.

(2) Connect the positive (+) battery lead to terminal B and the negative (-) battery lead to terminal E, then check that the light illuminates when the switch is in the ON position.

Standard:

Light illuminates.

If the light does not illuminate, replace the bulb.

INSTALLATION

1. INSTALL ROOM LIGHT ASSEMBLY

(a) Install room light bulb No. 1.

(b) Engage the 4 claws and install the room light switch base.

(c) Install the roof wire into the claw of the room light.

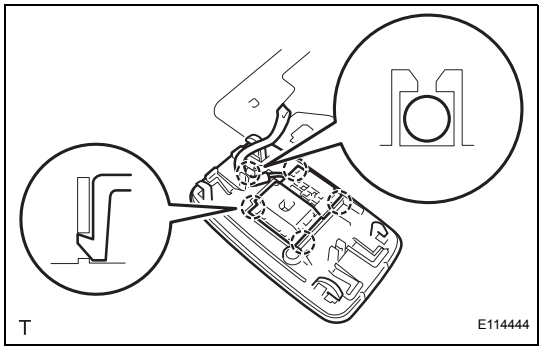

(d) Engage the 4 claws and install the room light.

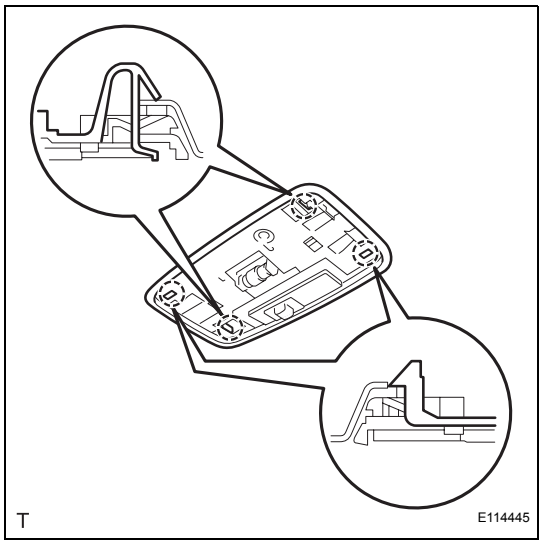

(e) Engage the 4 claws and install the 2 covers.

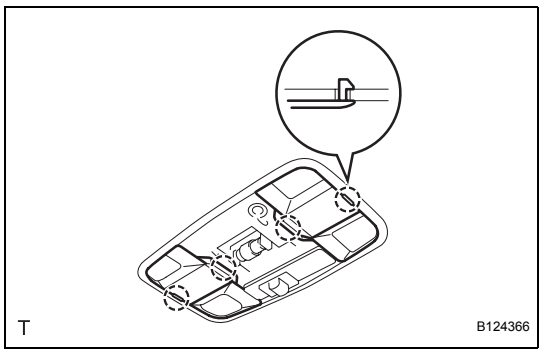

(f) Engage the 4 claws and install the room light lens.

2. CONNECT CABLE TO NEGATIVE BATTERY TERMINAL
Torque: 5.4 N*m (55 kgf*cm, 48 in.*lbf)

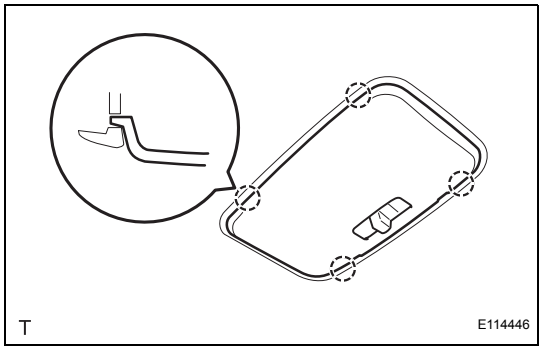

LUGGAGE COMPARTMENT ROOM LIGHT (for Sedan)

COMPONENTS

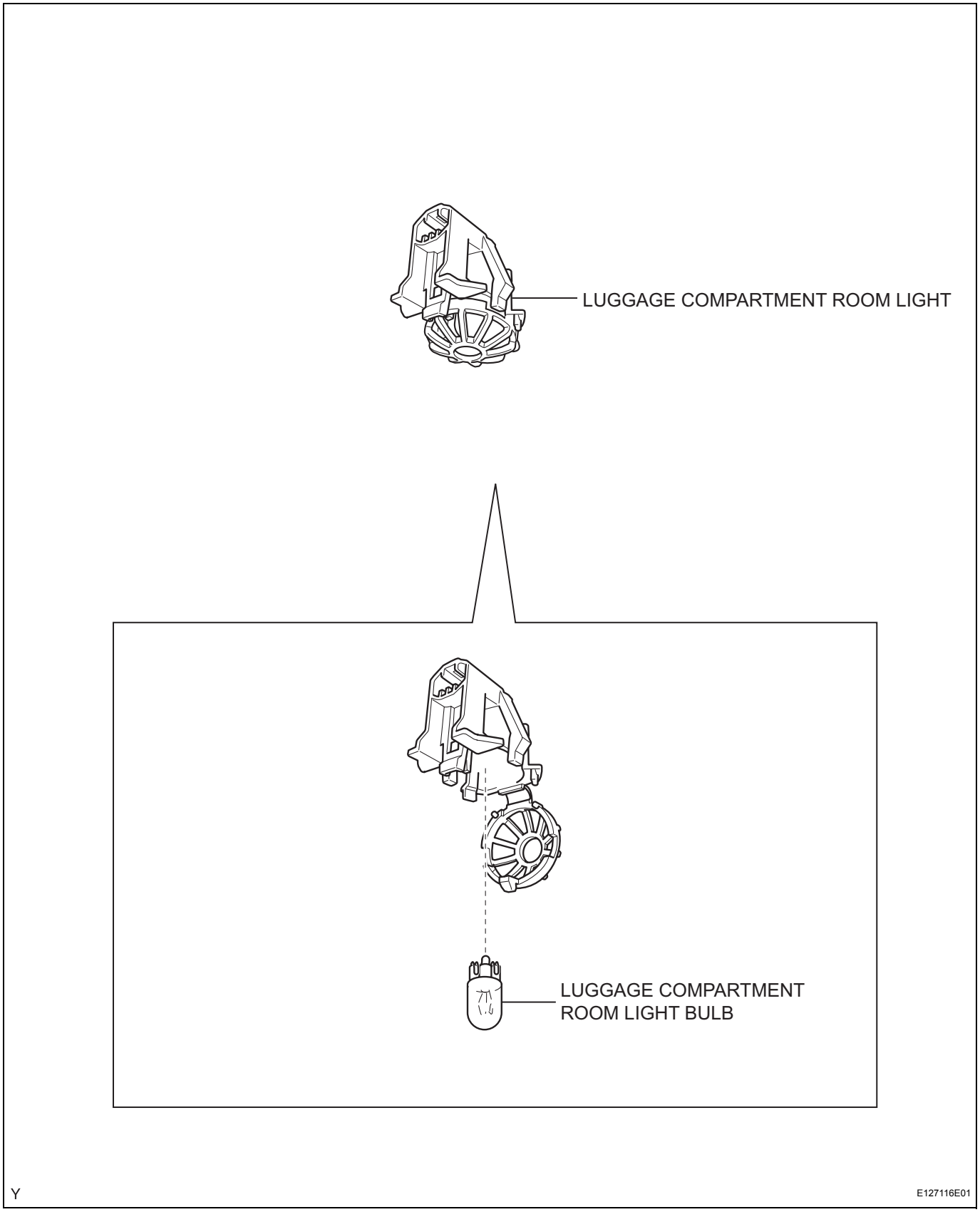

REMOVAL

1. DISCONNECT CABLE FROM NEGATIVE BATTERY TERMINAL

2. REMOVE LUGGAGE COMPARTMENT ROOM LIGHT

(a) Disengage the claw and pull up the luggage compartment room light in the direction indicated by the arrow.

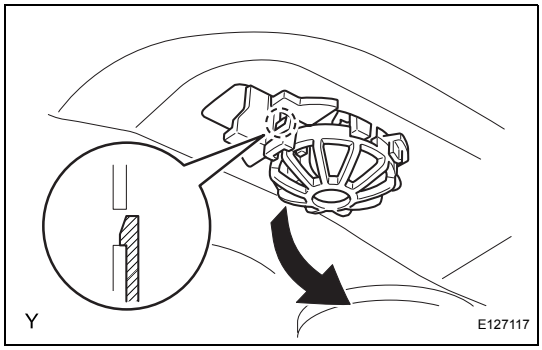

(b) Disengage the 2 claws and remove the luggage compartment room light.

(c) Disconnect the connector.

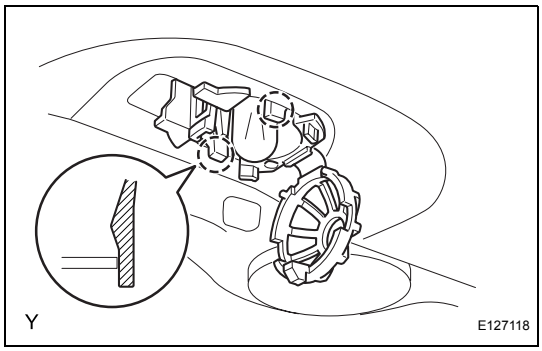

3. REMOVE LUGGAGE COMPARTMENT ROOM LIGHT BULB

(a) Remove the luggage compartment room light bulb.

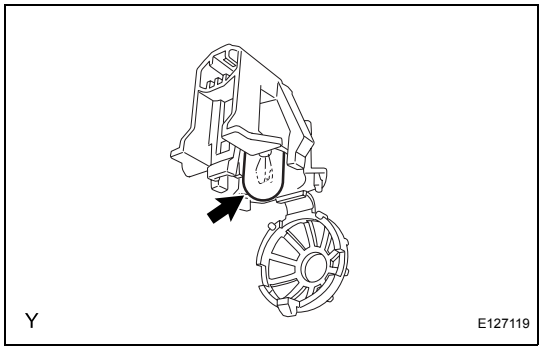

INSPECTION

1. INSPECT LUGGAGE COMPARTMENT ROOM LIGHT

(a) Check the light operation.

(1) Connect the positive (+) battery lead to terminal 1 and the negative (-) battery lead to terminal 2, then check that the light illuminates.

Standard:

Light illuminates.

If the light does not illuminate, replace the bulb.

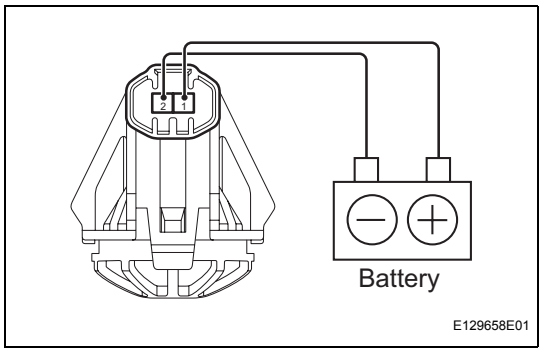

INSTALLATION

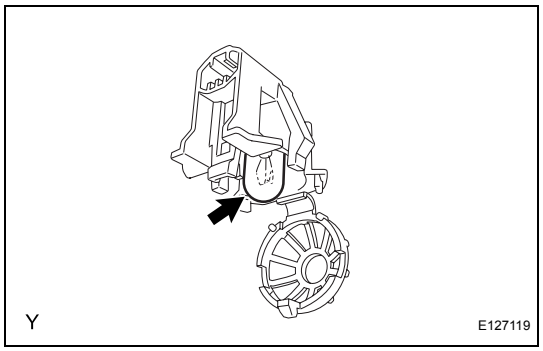

1. INSTALL LUGGAGE COMPARTMENT ROOM LIGHT BULB

(a) Install the luggage compartment room light bulb.

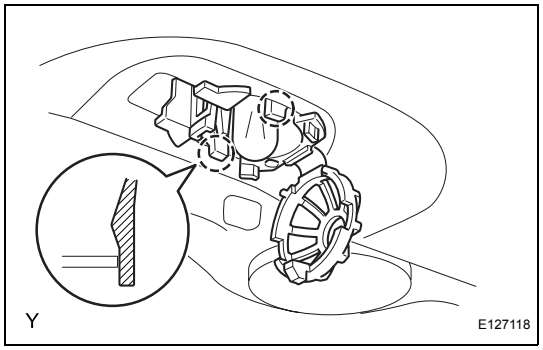

2. INSTALL LUGGAGE COMPARTMENT ROOM LIGHT

(a) Connect the connector.

(b) Engage the 2 claws and install the luggage compartment room light.

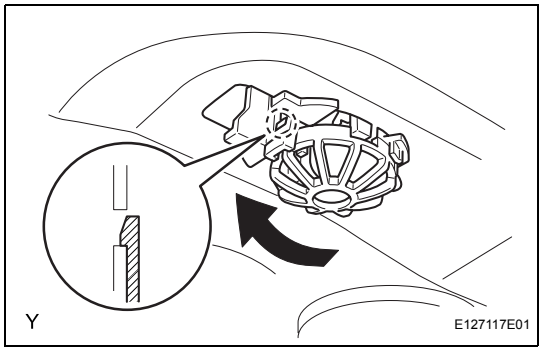

(c) Tilt the luggage compartment room light in the direction shown in the illustration and lock it.

3. CONNECT CABLE TO NEGATIVE BATTERY TERMINAL

Torque: 5.4 N*m (55 kgf*cm, 48 in.*lbf)

LI

LUGGAGE COMPARTMENT ROOM LIGHT (for Hatchback)

COMPONENTS

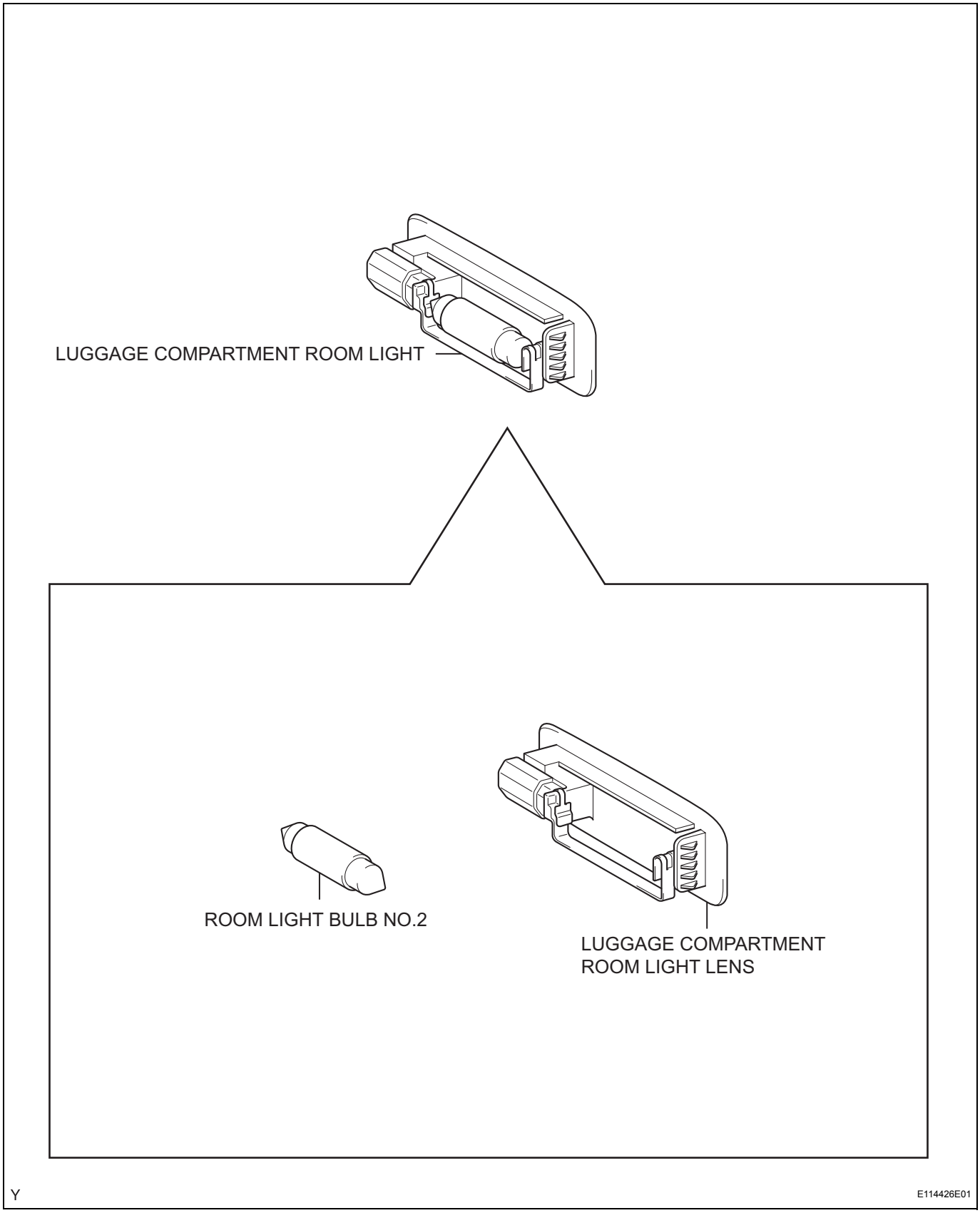

REMOVAL

1. DISCONNECT CABLE FROM NEGATIVE BATTERY TERMINAL

2. REMOVE LUGGAGE COMPARTMENT ROOM LIGHT

(a) Using a screwdriver with its tip wrapped in protective tape, disengage the claw and remove the luggage compartment room light.

(b) Disconnect the connector.

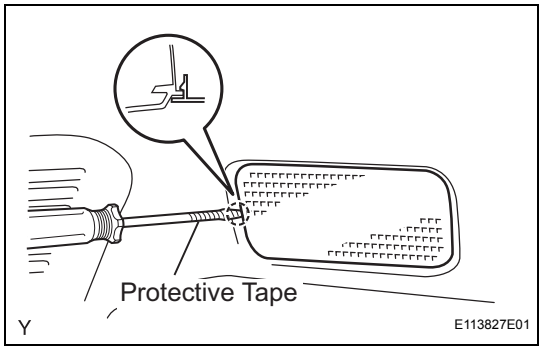

3. REMOVE ROOM LIGHT BULB NO.2

(a) Remove room light bulb No. 2.

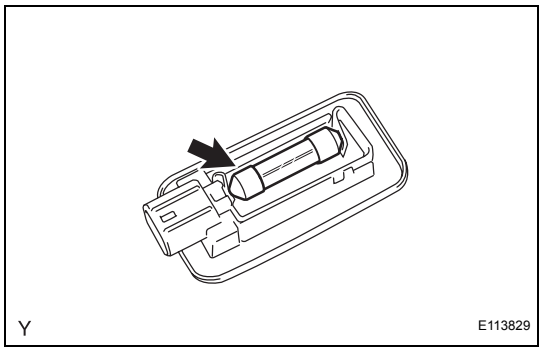

INSPECTION

1. INSPECT LUGGAGE COMPARTMENT ROOM LIGHT

(a) Check the light operation.

(1) Connect the positive (+) battery lead to terminal 2 and the negative (-) battery lead to terminal 1, then check that the light illuminates.

Standard:

Light illuminates.

If the light does not illuminate, replace the bulb.

INSTALLATION

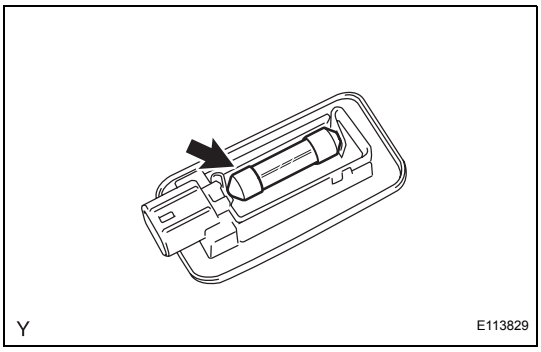

1. INSTALL ROOM LIGHT BULB NO.2

(a) Install room light bulb No. 2.

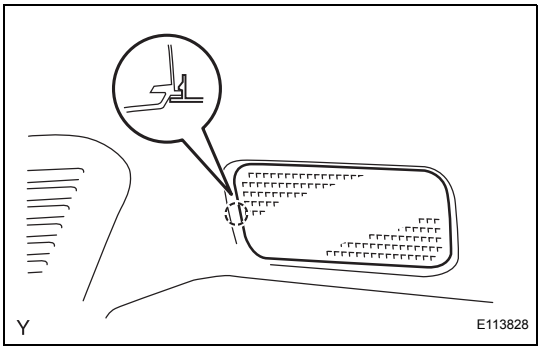

2. INSTALL LUGGAGE COMPARTMENT ROOM LIGHT

(a) Connect the connector.

(b) Engage the claw and install the luggage compartment room light.

3. CONNECT CABLE TO NEGATIVE BATTERY TERMINAL

Torque: 5.4 N*m (55 kgf*cm, 48 in.*lbf)

LI

HEADLIGHT DIMMER SWITCH

COMPONENTS

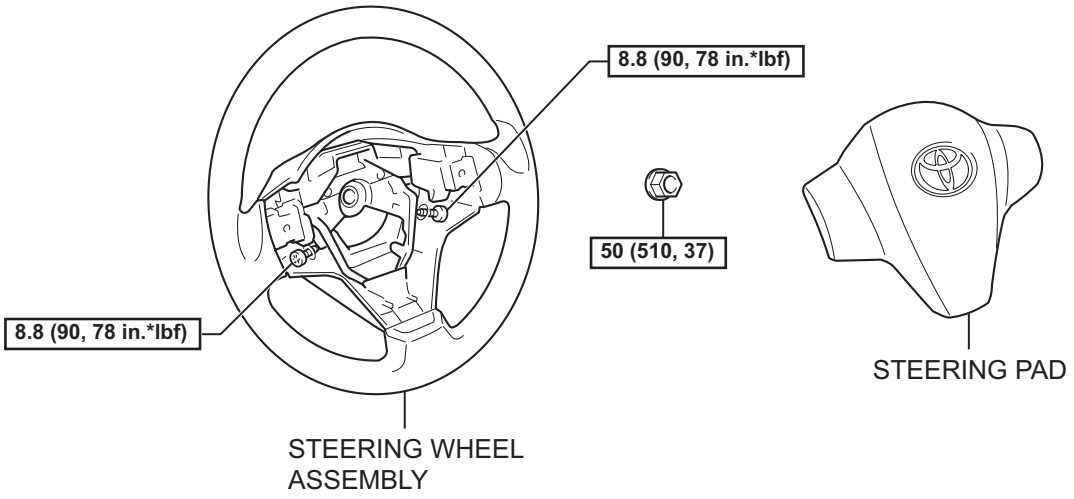

N*m (kgf*cm, ft*lbf) : Specified torque

Y

E117227E02

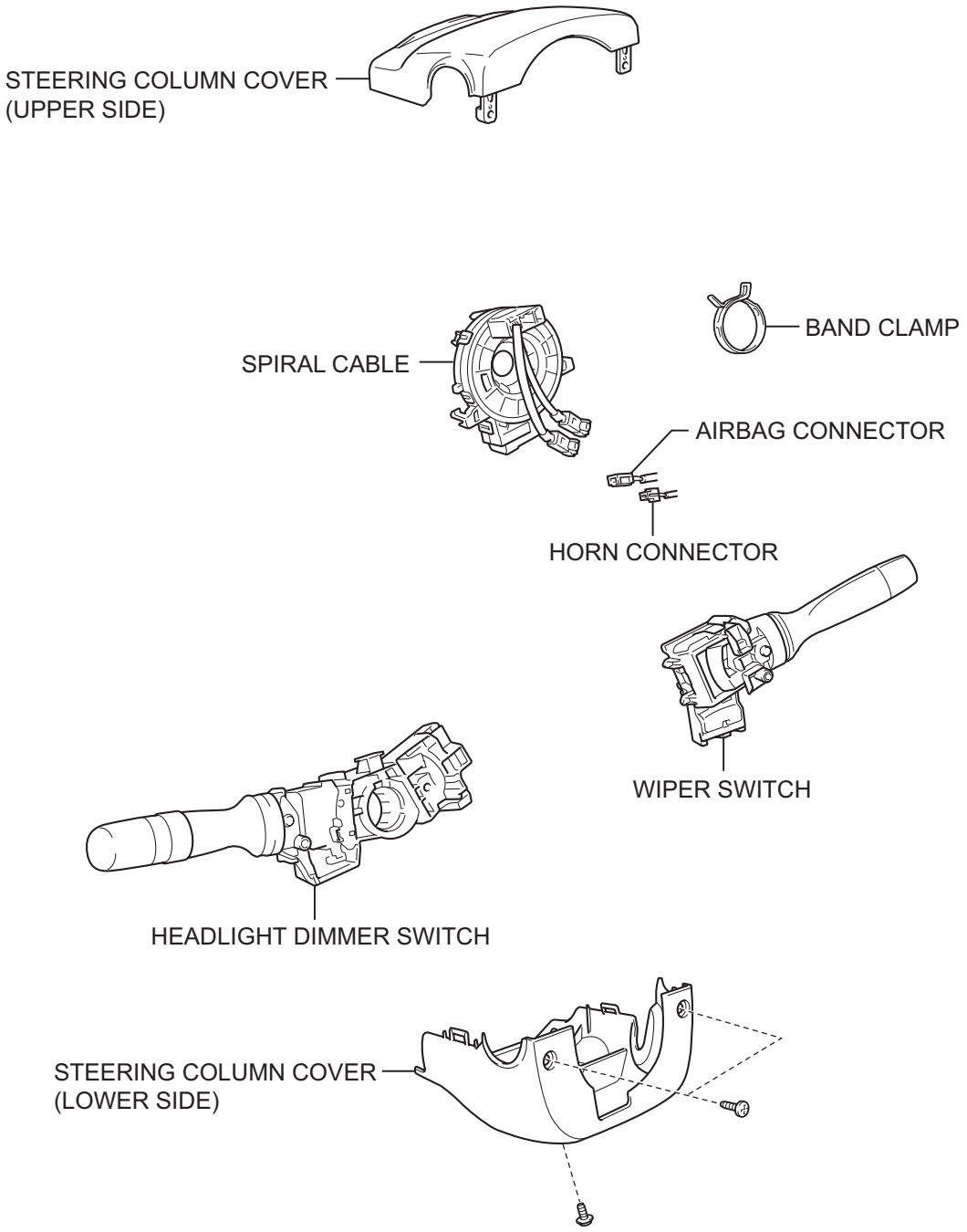

Y

E129698E01

REMOVAL

CAUTION:
Some of these service operations affect the SRS airbag system. Read the precautionary notices concerning the SRS airbag system before servicing (see page RS-1).

1. **DISCONNECT CABLE FROM NEGATIVE BATTERY TERMINAL**
   Wait for at least 90 seconds after disconnecting the cable to prevent the airbag from working.
2. **POSITION FRONT WHEELS FACING STRAIGHT AHEAD**
3. **REMOVE STEERING PAD (See page RS-309)**
4. **REMOVE STEERING WHEEL ASSEMBLY (for Hatchback) (See page SR-30)**
5. **REMOVE STEERING WHEEL ASSEMBLY (for Sedan) (See page SR-12)**
6. **REMOVE STEERING COLUMN COVER (for Hatchback) (See page SR-30)**
7. **REMOVE STEERING COLUMN COVER (for Sedan) (See page SR-12)**
8. **REMOVE SPIRAL CABLE (See page RS-321)**
9. **REMOVE WIPER SWITCH**
   (a) Disconnect the 2 connectors.
   (b) Using a screwdriver with its tip wrapped in protective tape, disengage the claw and remove the wiper switch.
   NOTICE:
   Do not press the claw too hard, as it may be damaged.

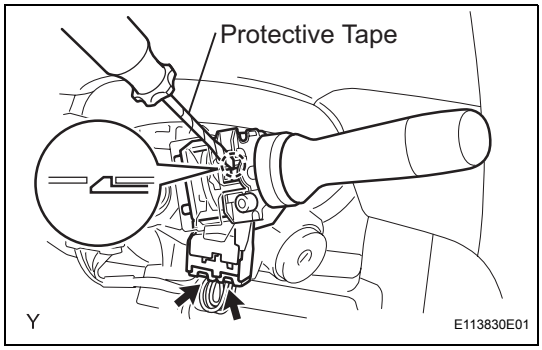

10. **REMOVE HEADLIGHT DIMMER SWITCH**
    (a) Disconnect the connector.
    (b) Remove the headlight dimmer switch, as shown in the illustration.

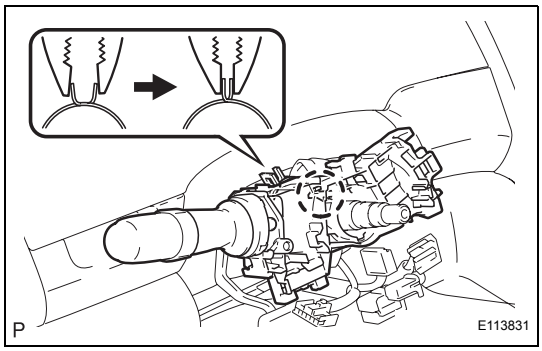

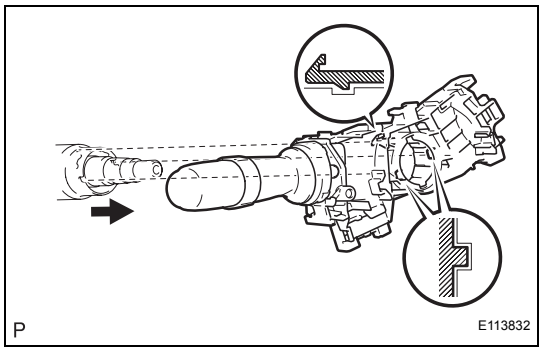

(c) Disengage the 2 claws and remove the headlight dimmer switch.

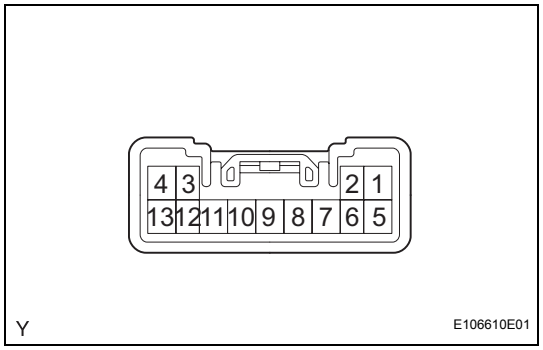

INSPECTION

1. INSPECT HEADLIGHT DIMMER SWITCH

(a) Check the resistance of the light control switch.

(1) Using an ohmmeter, measure the resistance and check the results in accordance with the value(s) in the table below.

Standard Resistance

Tester Connection	Condition	Specified Condition
10 - 11 - 12 - 13	OFF	10 kΩ or higher
10 - 13	TAIL	Below 1 Ω
10 - 13	HEAD	Below 1 Ω
11 - 12	HEAD	Below 1 Ω

If the result is not as specified, replace the headlight dimmer switch.

(b) Check the resistance of the headlight dimmer switch.

(1) Using an ohmmeter, measure the resistance and check the results in accordance with the value(s) in the table below.

Standard Resistance

Tester Connection	Condition	Specified Condition
9 - 11	FLASH	Below 1 Ω
8 - 11	LOW BEAM	Below 1 Ω
9 - 11	HI BEAM	Below 1 Ω

If the result is not as specified, replace the headlight dimmer switch.

(c) Check the resistance of the turn signal switch.

(1) Using an ohmmeter, measure the resistance and check the results in accordance with the value(s) in the table below.

Standard Resistance

Tester Connection	Condition	Specified Condition
6 - 7	Right turn	Below 1 Ω
5 - 6 - 7	Neutral	10 kΩ or higher
5 - 7	Left turn	Below 1 Ω

If the result is not as specified, replace the headlight dimmer switch.

(d) w/ Front fog light:

Check the resistance of the front fog light switch.

(1) Using an ohmmeter, measure the resistance and check the results in accordance with the value(s) in the table below.
Standard Resistance

Tester Connection	Condition	Specified Condition
3 - 4	OFF	10 kΩ or higher
3 - 4	Front fog light switch ON	Below 1 Ω

If the result is not as specified, replace the headlight dimmer switch.

INSTALLATION

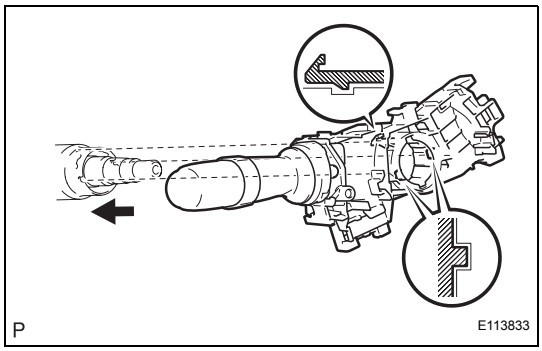

1. INSTALL HEADLIGHT DIMMER SWITCH
(a) Engage the 2 claws and install the headlight dimmer switch, as shown in the illustration.

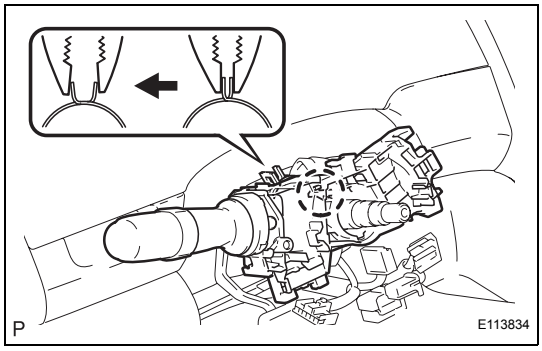

(b) Install the headlight dimmer switch with the clamp.
(c) Connect the connector.

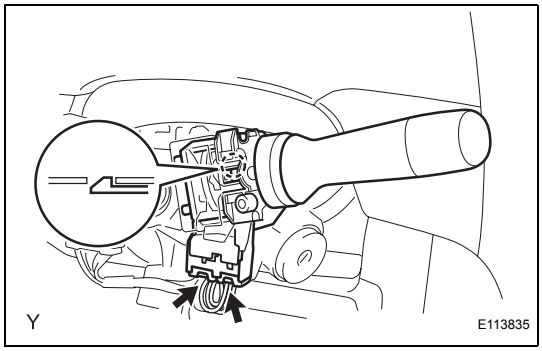

2. INSTALL WIPER SWITCH
(a) Engage the claw and install the windshield wiper switch.
(b) Connect the 2 connectors.

3. INSTALL SPIRAL CABLE (See page RS-322)

4. INSTALL STEERING COLUMN COVER (for Hatchback) (See page SR-40)

5. INSTALL STEERING COLUMN COVER (for Sedan) (See page SR-22)

6. ADJUST SPIRAL CABLE (See page RS-323)

7. INSTALL STEERING WHEEL ASSEMBLY (for Hatchback) (See page SR-41)

8. INSTALL STEERING WHEEL ASSEMBLY (for Sedan) (See page SR-22)

9. INSTALL STEERING PAD (See page RS-310)

10. CONNECT CABLE TO NEGATIVE BATTERY TERMINAL
Torque: 5.4 N*m (55 kgf*cm, 48 in.*lbf)

11. INSPECT SRS WARNING LIGHT
(See page RS-310).

HAZARD WARNING SWITCH (for Sedan)

COMPONENTS

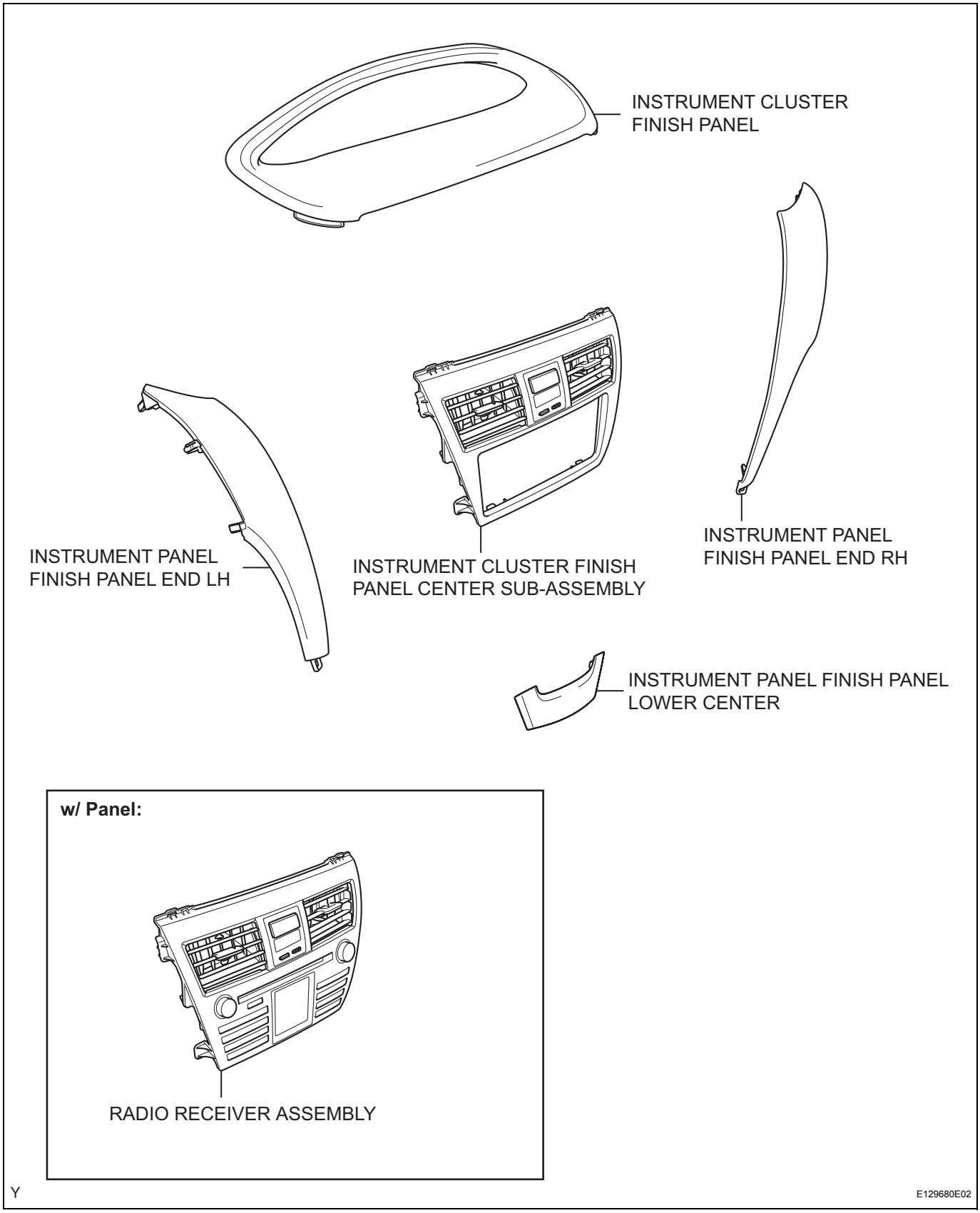

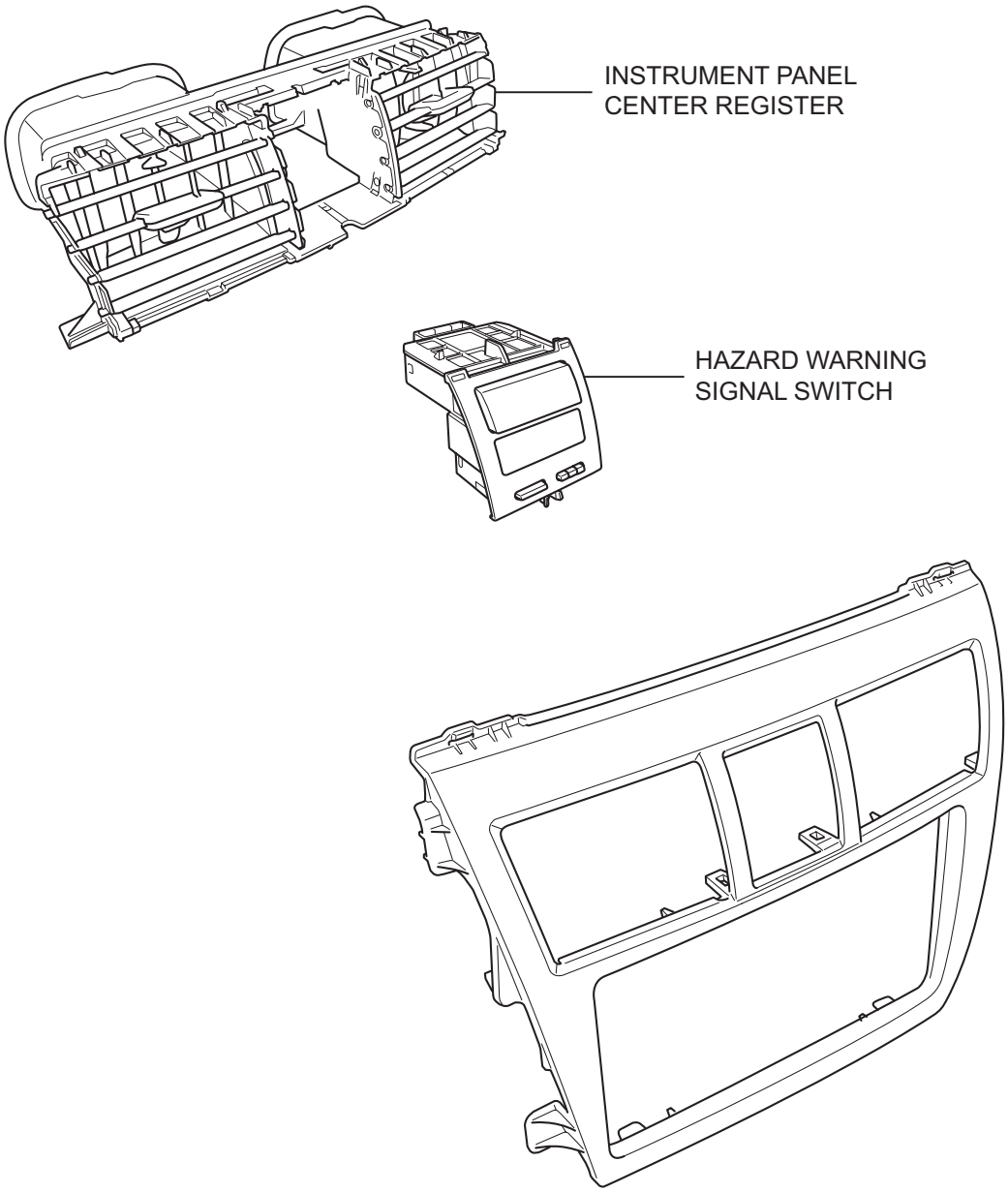

Y

E127120E01

REMOVAL

1. **DISCONNECT CABLE FROM NEGATIVE BATTERY TERMINAL**
2. **REMOVE INSTRUMENT CLUSTER FINISH PANEL (See page ME-139)**
3. **REMOVE INSTRUMENT PANEL FINISH PANEL LOWER CENTER (See page ME-138)**
4. **REMOVE INSTRUMENT PANEL FINISH PANEL END RH (See page ME-138)**
5. **REMOVE INSTRUMENT PANEL FINISH PANEL END LH (See page ME-138)**
6. **REMOVE INSTRUMENT CLUSTER FINISH PANEL CENTER SUB-ASSEMBLY (w/o Radio Receiver) (See page IP-43)**
7. **REMOVE RADIO RECEIVER ASSEMBLY (w/ Radio Receiver) (See page AV-38)**
8. **REMOVE INSTRUMENT PANEL CENTER REGISTER**
   (a) Disengage the 8 claws and remove the instrument panel center register.

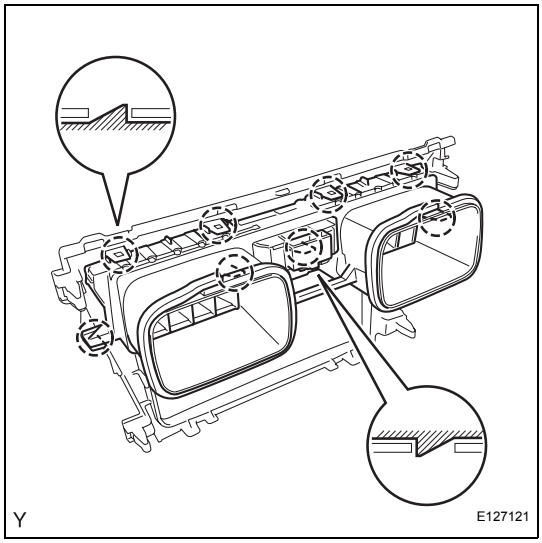

9. **REMOVE HAZARD WARNING SIGNAL SWITCH**
   (a) Disengage the 3 claws and remove the hazard warning signal switch.

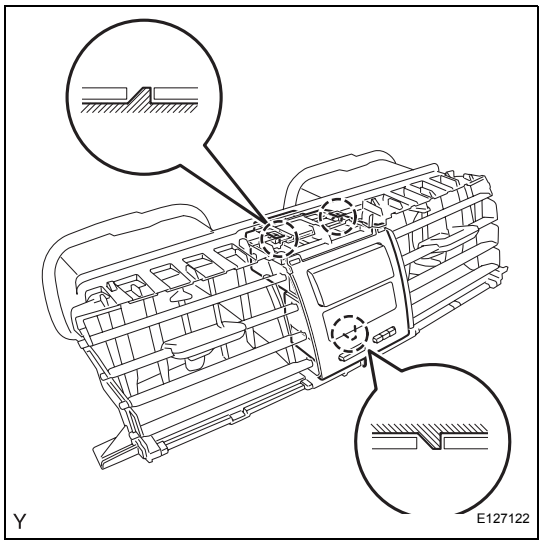

LI

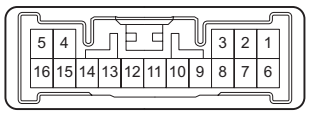

Y E127123

INSPECTION

1. INSPECT HAZARD WARNING SIGNAL SWITCH

(a) Check the resistance.

(1) Using an ohmmeter, measure the resistance and check the results in accordance with the value(s) in the table below.

Standard Resistance

Tester Connection	Condition	Specified Condition
4 - 15	OFF	10 kΩ or higher
4 - 15	ON	Below 1 Ω
3 - 13	Illumination circuit	Below 1 Ω

If the result is not as specified, replace the hazard warning signal switch.

(b) Check the illumination operation.

(1) Connect the positive (+) battery lead to terminal 13 and the negative (-) battery lead to terminal 3, then check that the illumination illuminates.

Standard:

Illumination illuminates.

If the illumination does not illuminate, replace the hazard warning signal switch.

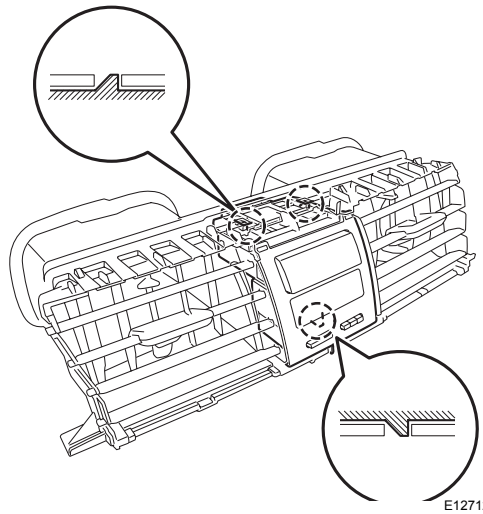

Y E127122

INSTALLATION

1. INSTALL HAZARD WARNING SIGNAL SWITCH

(a) Engage the 3 claws and remove the hazard warning signal switch.

LI

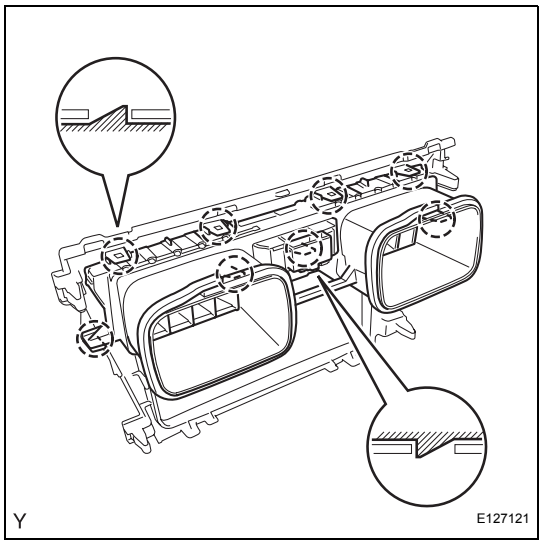

2. **INSTALL INSTRUMENT PANEL CENTER REGISTER**
   (a) Engage the 8 claws and the instrument panel center register.
3. **INSTALL INSTRUMENT CLUSTER FINISH PANEL CENTER SUB-ASSEMBLY (w/o Radio Receiver) (See page IP-56)**
4. **REMOVE RADIO RECEIVER ASSEMBLY (w/ Radio Receiver) (See page AV-40)**
5. **INSTALL INSTRUMENT CLUSTER FINISH PANEL (See page ME-140)**
6. **INSTALL INSTRUMENT PANEL FINISH PANEL END LH (See page ME-141)**
7. **INSTALL INSTRUMENT PANEL FINISH PANEL END RH (See page ME-141)**
8. **INSTALL INSTRUMENT PANEL FINISH PANEL LOWER CENTER (See page ME-142)**
9. **CONNECT CABLE TO NEGATIVE BATTERY TERMINAL**
   Torque: 5.4 N*m (55 kgf*cm, 48 in.*lbf)

HAZARD WARNING SWITCH (for Hatchback)

COMPONENTS

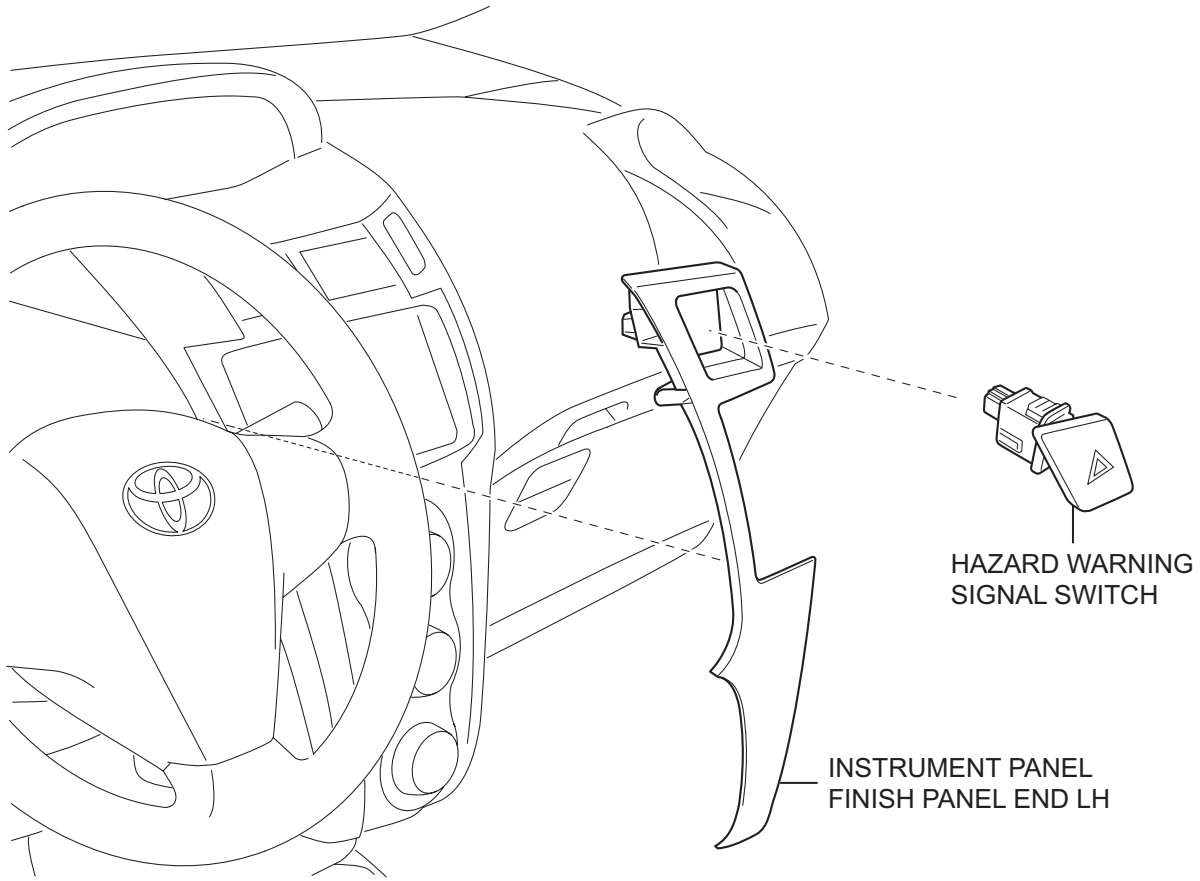

Y

E117229E01

REMOVAL

1. **DISCONNECT CABLE FROM NEGATIVE BATTERY TERMINAL**
2. **REMOVE INSTRUMENT PANEL FINISH PANEL END LH (See page ME-145)**
3. **REMOVE HAZARD WARNING SIGNAL SWITCH**
   (a) Disengage the 2 claws and remove the hazard warning signal switch.

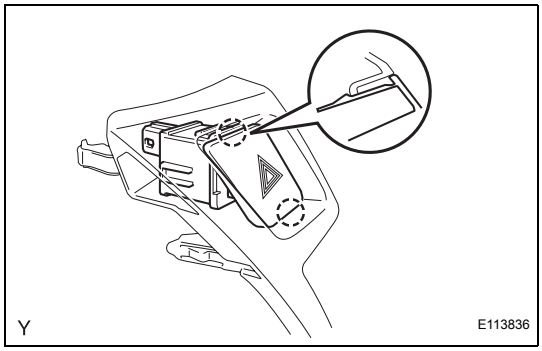

INSPECTION

1. **INSPECT HAZARD WARNING SIGNAL SWITCH**
   (a) Check the resistance.
      (1) Using an ohmmeter, measure the resistance and check the results in accordance with the value(s) in the table below.
      Standard Resistance

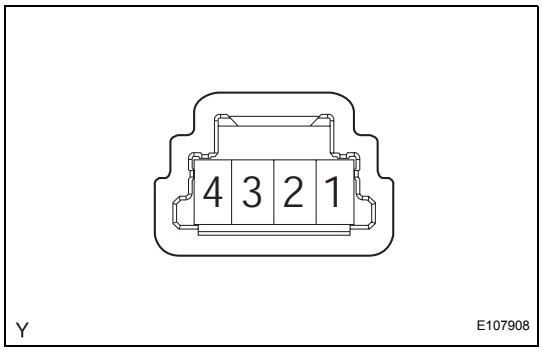

Tester Connection	Condition	Specified Condition
1 - 4	OFF	10 kΩ or higher
1 - 4	ON	Below 1 Ω
2 - 3	Illumination circuit	Below 1 Ω

If the result is not as specified, replace the hazard warning signal switch.

   (b) Check the illumination operation.
      (1) Connect the positive (+) battery lead to terminal 3 and the negative (-) battery lead to terminal 2, then check that the illumination illuminates.
      Standard:
      Illumination illuminates.
      If the illumination does not illuminate, replace the hazard warning signal switch.

INSTALLATION

1. **INSTALL HAZARD WARNING SIGNAL SWITCH**
   (a) Engage the 2 claws and install the hazard warning signal switch.
2. **INSTALL INSTRUMENT PANEL FINISH PANEL END LH (See page ME-149)**
3. **CONNECT CABLE TO NEGATIVE BATTERY TERMINAL**
   Torque: 5.4 N*m (55 kgf*cm, 48 in.*lbf)

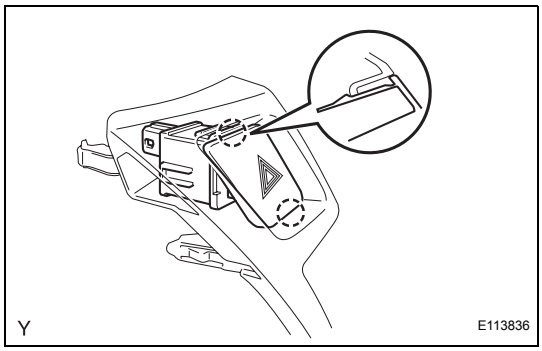

STOP LIGHT SWITCH (for Sedan)

COMPONENTS

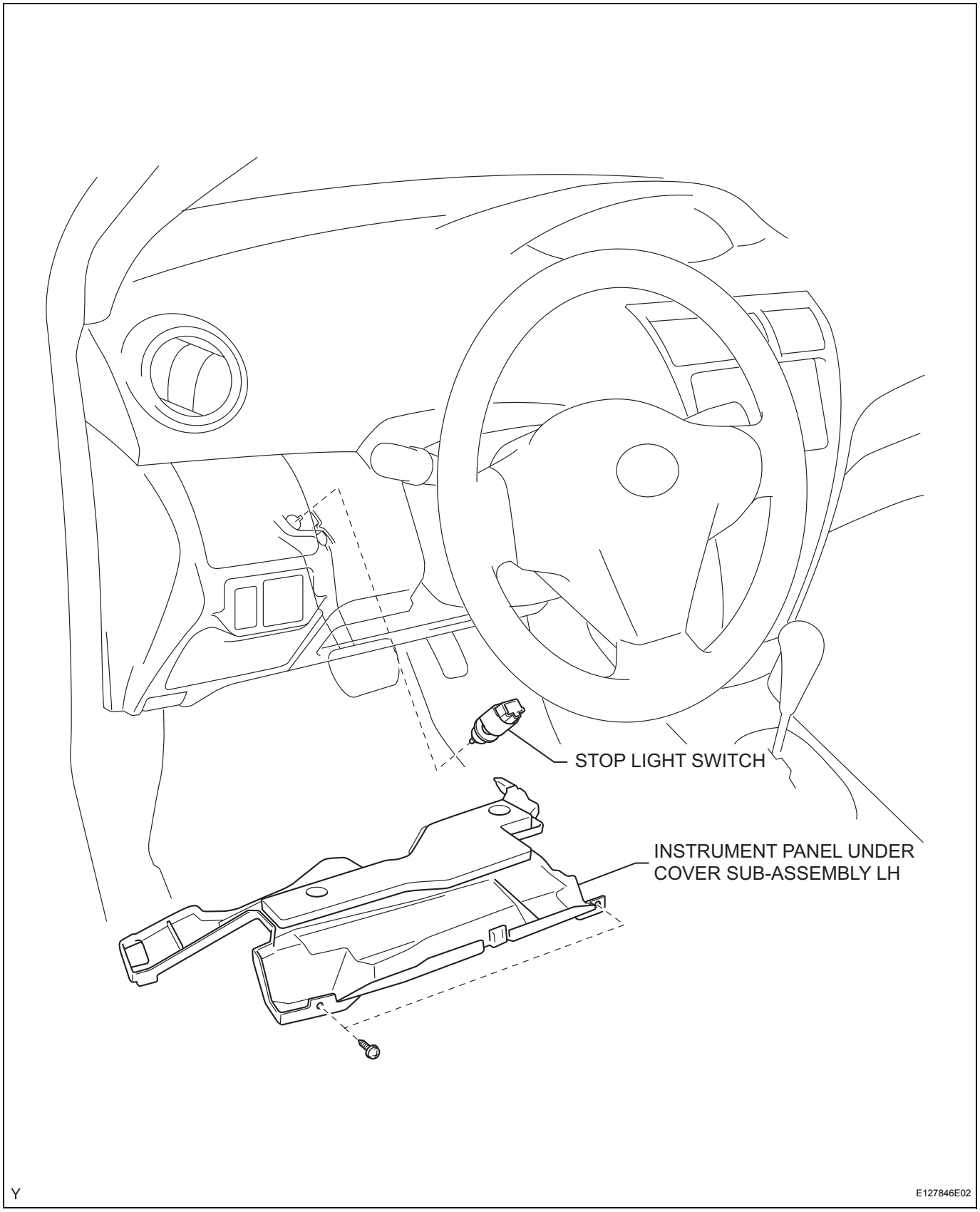

REMOVAL

1. **DISCONNECT CABLE FROM NEGATIVE BATTERY TERMINAL**
2. **REMOVE INSTRUMENT PANEL UNDER COVER SUB-ASSEMBLY LH (See page IR-14)**
3. **REMOVE STOP LIGHT SWITCH**
   (a) Remove the stop light switch connector from the stop light switch.

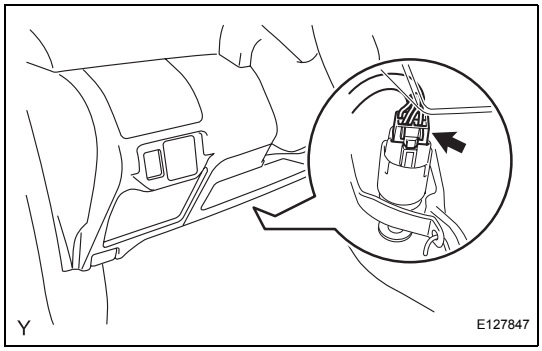

   (b) Turn the stop light switch counterclockwise and remove it.

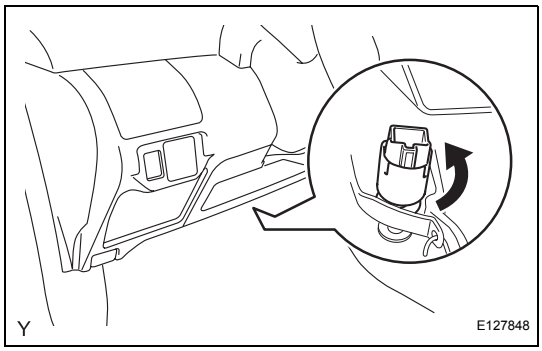

INSPECTION

1. **INSPECT STOP LIGHT SWITCH**
   (a) Check the resistance.
      (1) Using an ohmmeter, measure the resistance and check the results in accordance with the value(s) in the table below.
      Standard Resistance

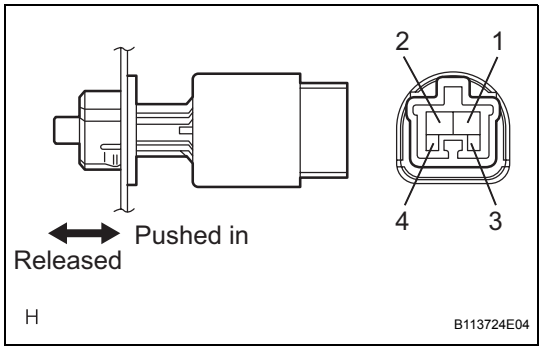

Tester Connection	Condition	Specified Condition
1 - 2	Switch pin released	Below 1 Ω
3 - 4		10 kΩ or higher
1 - 2	Switch pin pushed in	10 kΩ or higher
3 - 4		Below 1 Ω

If the result is not as specified, replace the stop light switch.

INSTALLATION

1. **INSTALL STOP LIGHT SWITCH**
   (a) Install the stop light switch into the adjuster until it slightly touches the brake pedal.
   NOTICE:
   Do not depress the brake pedal.

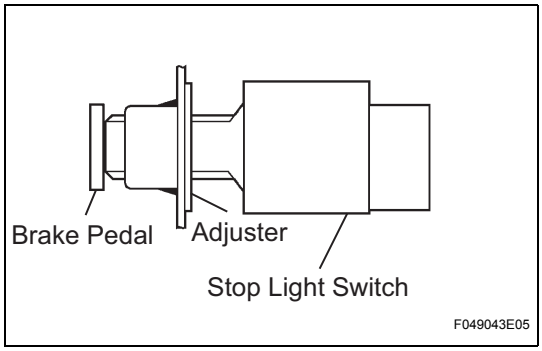

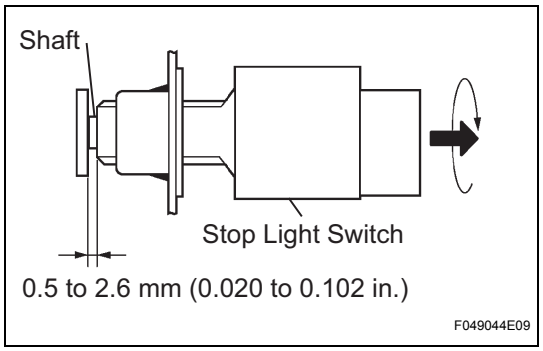

(1) Make a quarter turn clockwise to install the stop light switch.
NOTICE:
Do not depress the brake pedal.
HINT:
The turning torque for installing the stop light switch is as below.
Torque: 1.5 N*m (15 kgf*cm, 13 in.*lbf) or less

(b) Check the stop light switch clearance.
Stop light switch clearance:
0.5 to 2.6 mm (0.020 to 0.102 in.)

(c) Connect the stop light switch connector to the stop light switch.

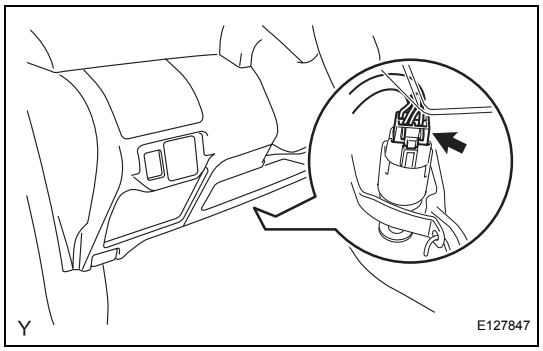

2. INSTALL INSTRUMENT PANEL UNDER COVER SUB-ASSEMBLY LH (See page IR-35)

3. CONNECT CABLE TO NEGATIVE BATTERY TERMINAL
Torque: 5.4 N*m (55 kgf*cm, 48 in.*lbf)

STOP LIGHT SWITCH (for Hatchback)

COMPONENTS

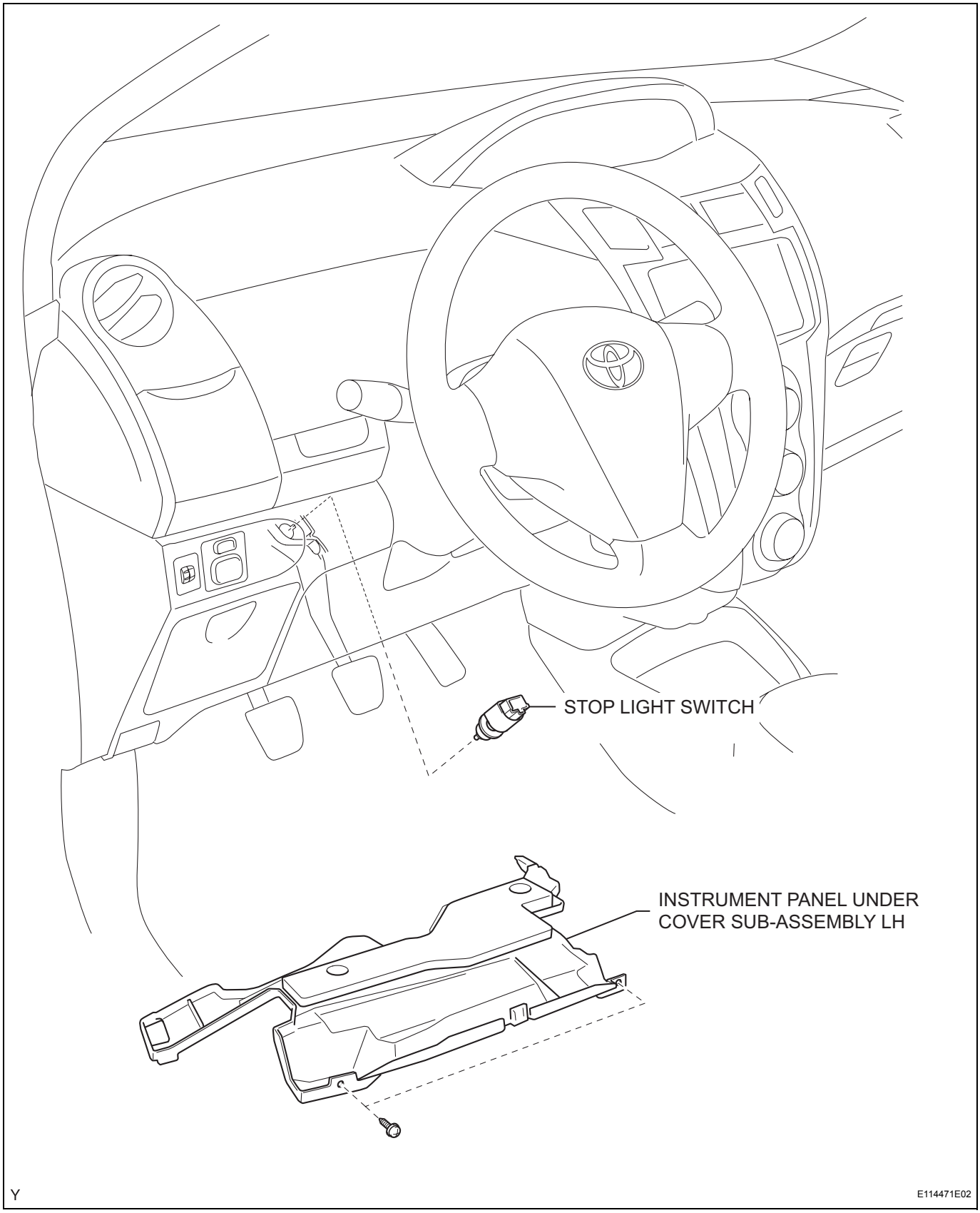

REMOVAL

1. **DISCONNECT CABLE FROM NEGATIVE BATTERY TERMINAL**
2. **REMOVE INSTRUMENT PANEL UNDER COVER SUB-ASSEMBLY LH (See page IR-50)**
3. **REMOVE STOP LIGHT SWITCH**
   (a) Remove the stop light switch connector from the stop light switch.

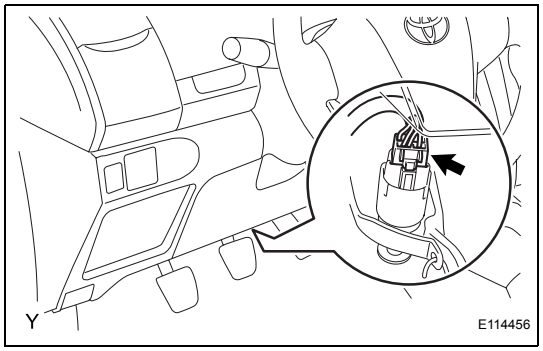

   (b) Turn the stop light switch counterclockwise and remove it.

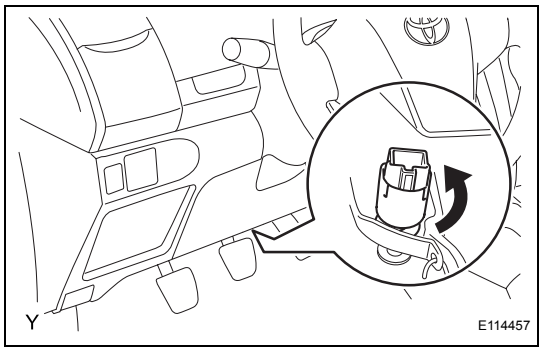

INSPECTION

1. **INSPECT STOP LIGHT SWITCH**
   (a) Check the resistance.
      (1) Using an ohmmeter, measure the resistance and check the results in accordance with the value(s) in the table below.
      Standard Resistance

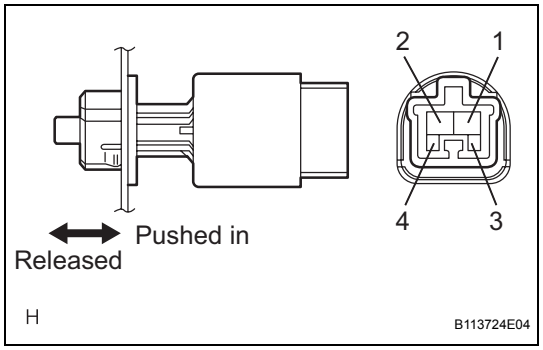

Tester Connection	Condition	Specified Condition
1 - 2	Switch pin released	Below 1 Ω
3 - 4	Switch pin released	10 kΩ or higher
1 - 2	Switch pin pushed in	10 kΩ or higher
3 - 4	Switch pin pushed in	Below 1 Ω

If the result is not as specified, replace the stop light switch.

INSTALLATION

1. **INSTALL STOP LIGHT SWITCH**
   (a) Install the stop light switch into the adjuster until it slightly touches the brake pedal.
   NOTICE:
   Do not depress the brake pedal.

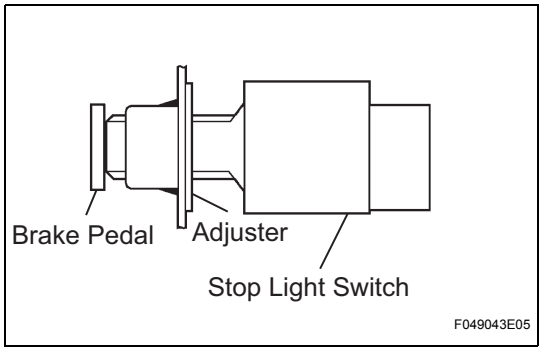

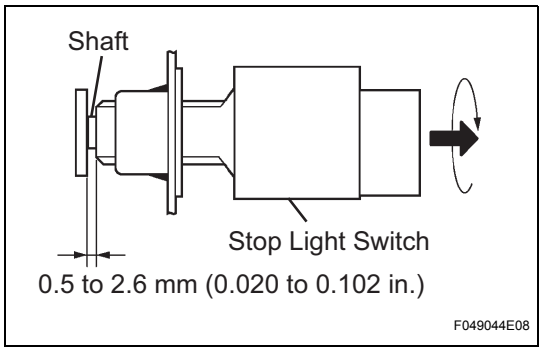

(1) Make a quarter turn clockwise to install the stop light switch.
NOTICE:
Do not depress the brake pedal.
HINT:
The turning torque for installing the stop light switch is as below.
Torque: 1.5 N*m (15 kgf*cm, 13 in.*lbf) or less

(b) Check the stop light switch clearance.
Stop light switch clearance:
0.5 to 2.6 mm (0.020 to 0.102 in.)

(c) Connect the stop light switch connector to the stop light switch.

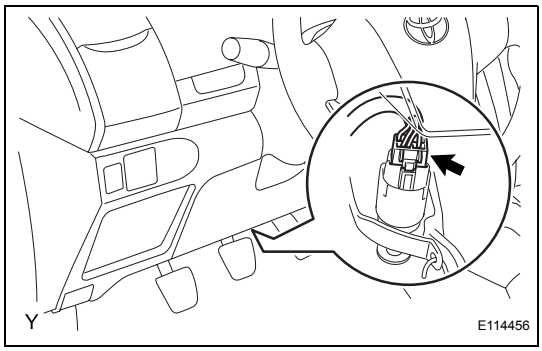

2. INSTALL INSTRUMENT PANEL UNDER COVER SUB-ASSEMBLY LH (See page IR-82)

3. CONNECT CABLE TO NEGATIVE BATTERY TERMINAL
Torque: 5.4 N*m (55 kgf*cm, 48 in.*lbf)

FRONT DOOR COURTESY SWITCH (for Sedan)

COMPONENTS

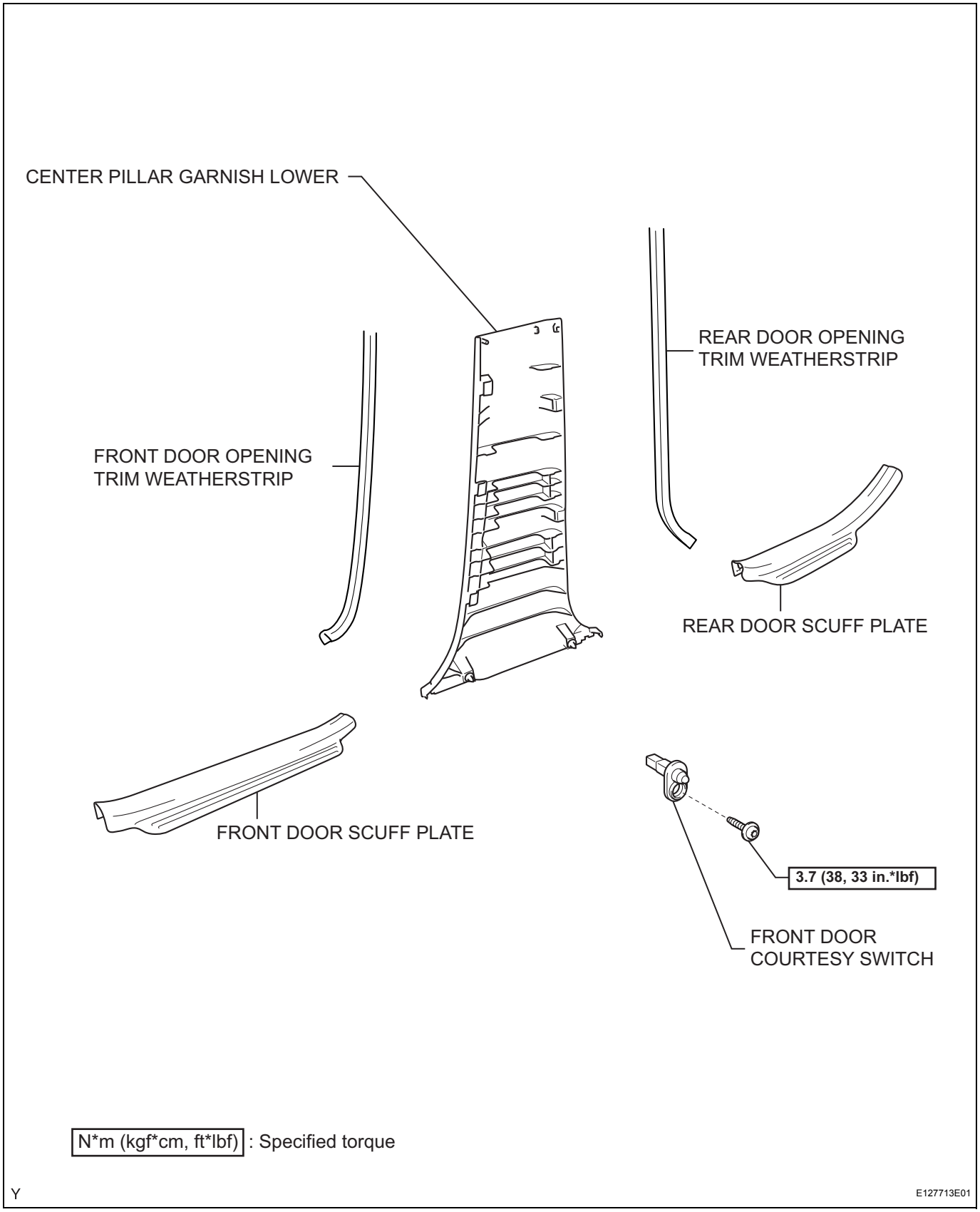

LI

REMOVAL

HINT:
- Use the same procedure for both the RH and LH sides.
- The procedure described below is for the LH side.

1. DISCONNECT CABLE FROM NEGATIVE BATTERY TERMINAL

2. REMOVE FRONT DOOR SCUFF PLATE (See page IR-14)

3. REMOVE REAR DOOR SCUFF PLATE (See page IR-15)

4. REMOVE FRONT DOOR OPENING TRIM WEATHERSTRIP

(a) Remove the front door opening trim weatherstrip.

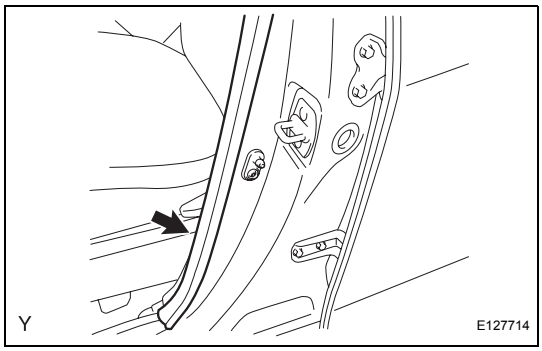

5. REMOVE REAR DOOR OPENING TRIM WEATHERSTRIP

(a) Remove the rear door opening trim weatherstrip.

6. REMOVE CENTER PILLAR GARNISH LOWER (See page IR-16)

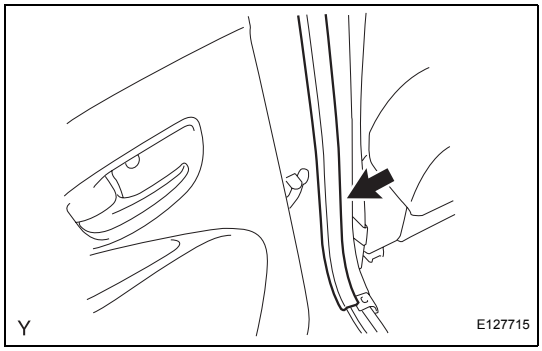

7. REMOVE FRONT DOOR COURTESY SWITCH

(a) Using "Torx" socket wrench T30, remove the screw.

(b) Disconnect the connector and remove the front door courtesy switch.

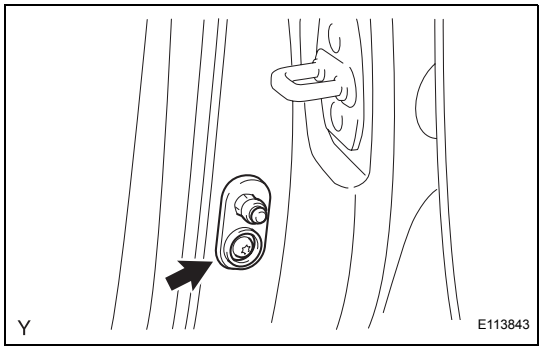

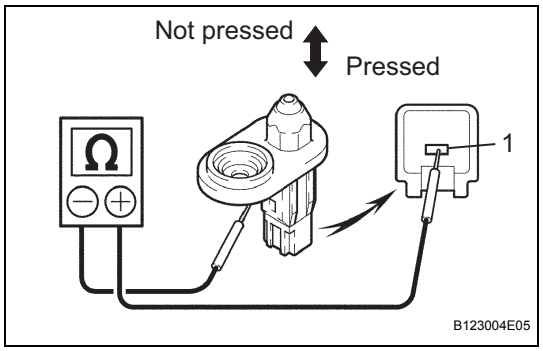

INSPECTION

1. INSPECT FRONT DOOR COURTESY SWITCH

(a) Check the resistance.

(1) Using an ohmmeter, measure the resistance and check the results in accordance with the value(s) in the table below.

Standard Resistance

Tester Connection	Condition	Specified Condition
1 - Switch body	ON (Shaft not pressed)	Below 1 Ω
1 - Switch body	OFF (Shaft pressed)	10 kΩ or higher

If the result is not as specified, replace the front door courtesy switch.

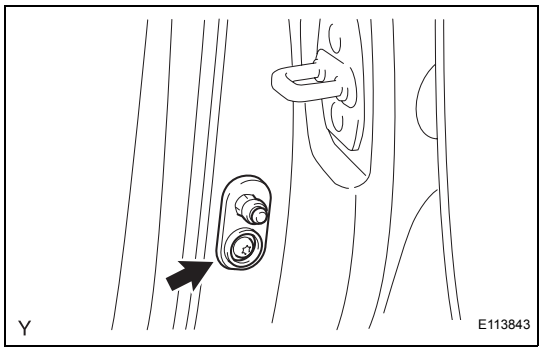

INSTALLATION

1. INSTALL FRONT DOOR COURTESY SWITCH

(a) Connect the connector.

(b) Using "Torx" socket wrench T30, install the front door courtesy switch with the screw.

Torque: 3.7 N*m (38 kgf*cm, 33 in.*lbf)

2. INSTALL CENTER PILLAR GARNISH LOWER (See page IR-32)

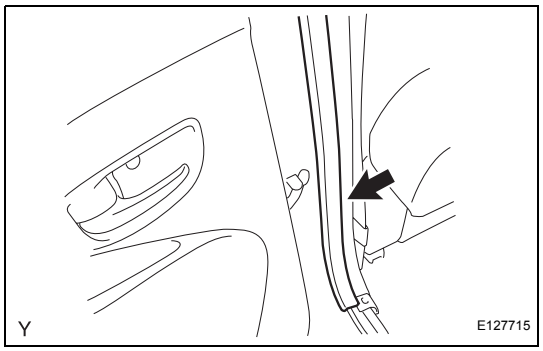

3. INSTALL REAR DOOR OPENING TRIM WEATHERSTRIP

(a) Install the rear door opening trim weatherstrip.

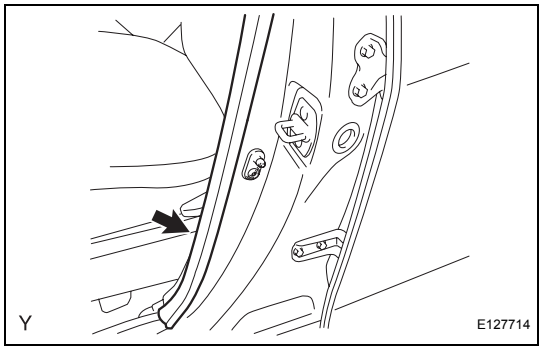

4. INSTALL FRONT DOOR OPENING TRIM WEATHERSTRIP

(a) Install the front door opening trim weatherstrip.

5. INSTALL REAR DOOR SCUFF PLATE (See page IR-34)

6. INSTALL FRONT DOOR SCUFF PLATE (See page IR-35)

7. CONNECT CABLE TO NEGATIVE BATTERY TERMINAL

Torque: 5.4 N*m (55 kgf*cm, 48 in.*lbf)

FRONT DOOR COURTESY SWITCH (for Hatchback)

COMPONENTS

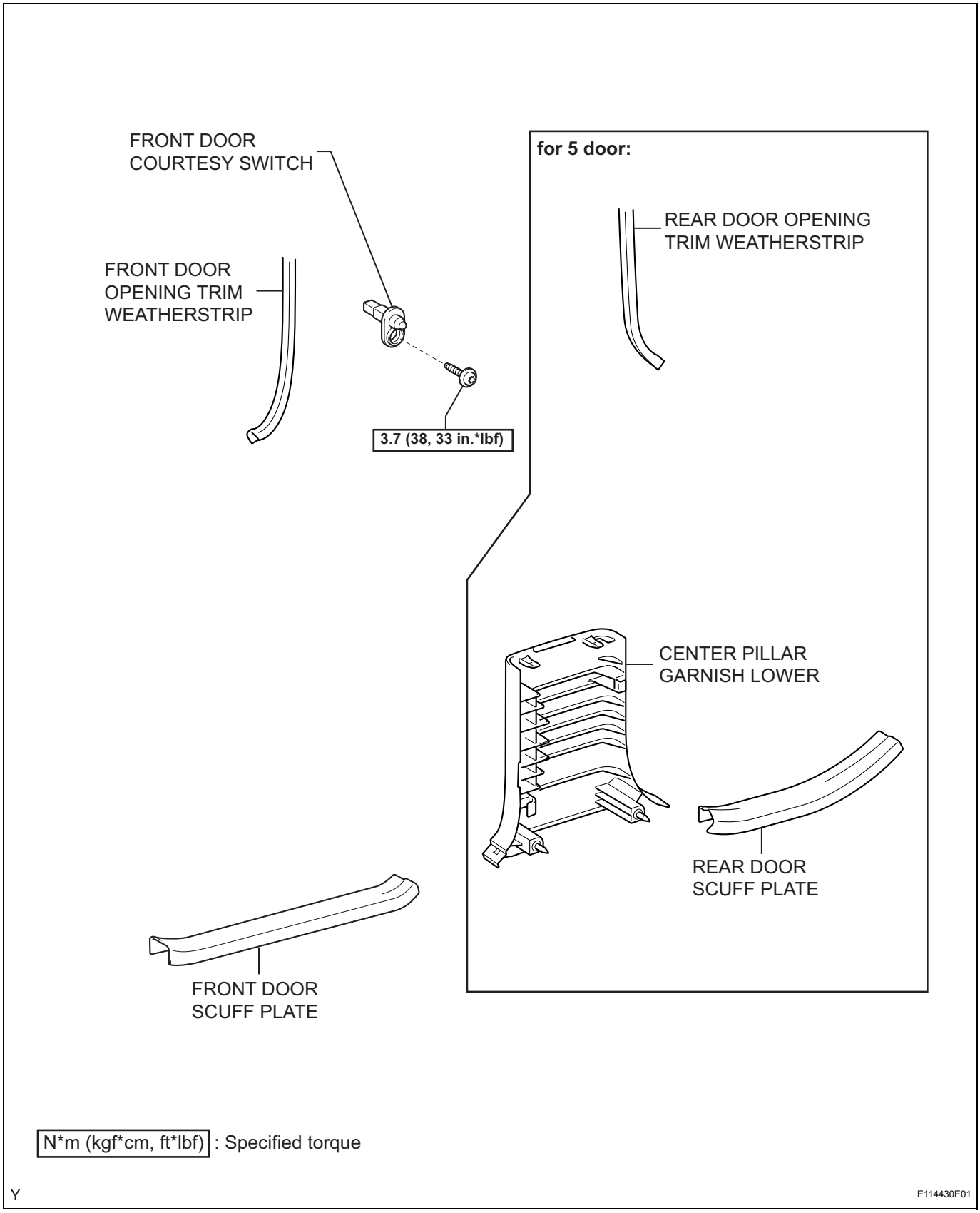

REMOVAL

HINT:
- Use the same procedure for both the RH and LH sides.
- The procedure described below is for the LH side.

1. DISCONNECT CABLE FROM NEGATIVE BATTERY TERMINAL

2. REMOVE FRONT DOOR SCUFF PLATE (for 5 Door) (See page IR-49)

3. REMOVE FRONT DOOR SCUFF PLATE (for 3 Door) (See page IR-97)

4. REMOVE REAR DOOR SCUFF PLATE (for 5 Door) (See page IR-51)

5. REMOVE FRONT DOOR OPENING TRIM WEATHERSTRIP

(a) Remove the front door opening trim weatherstrip.

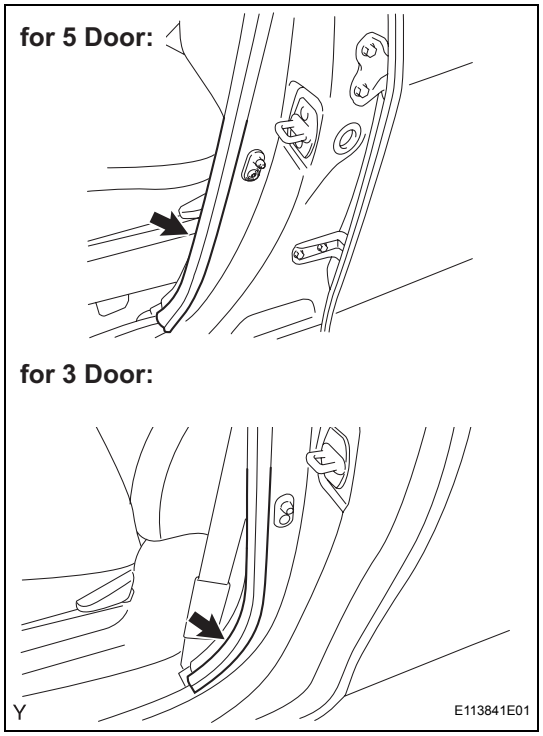

6. REMOVE REAR DOOR OPENING TRIM WEATHERSTRIP (for 5 Door)

(a) Remove the rear door opening trim weatherstrip.

7. REMOVE CENTER PILLAR GARNISH LOWER (for 5 Door) (See page IR-55)

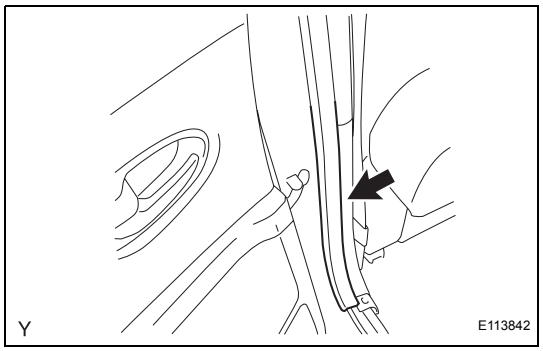

LI

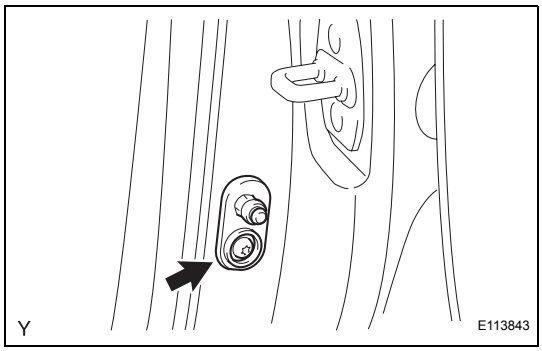

8. REMOVE FRONT DOOR COURTESY SWITCH
(a) Using "Torx" socket wrench T30, remove the screw.
(b) Disconnect the connector and remove the front door courtesy switch.

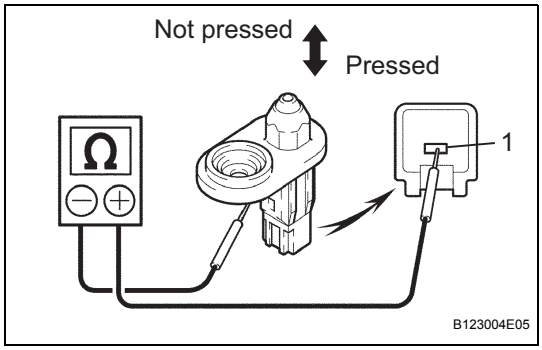

INSPECTION

1. INSPECT FRONT DOOR COURTESY SWITCH
(a) Check the resistance.
(1) Using an ohmmeter, measure the resistance and check the results in accordance with the value(s) in the table below.
Standard Resistance

Tester Connection	Condition	Specified Condition
1 - Switch body	ON (Shaft not pressed)	Below 1 Ω
1 - Switch body	OFF (Shaft pressed)	10 kΩ or higher

If the result is not as specified, replace the front door courtesy switch.

INSTALLATION

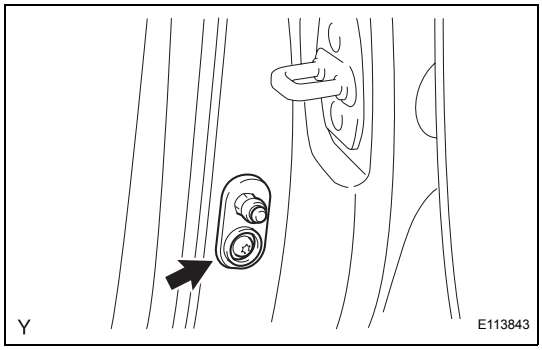

1. INSTALL FRONT DOOR COURTESY SWITCH
(a) Connect the connector.
(b) Using "Torx" socket wrench T30, install the front door courtesy switch with the screw.
Torque: 3.7 N*m (38 kgf*cm, 33 in.*lbf)

2. INSTALL CENTER PILLAR GARNISH LOWER (for 5 Door) (See page IR-76)

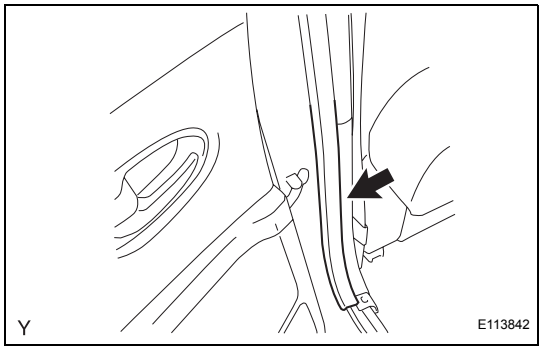

3. INSTALL REAR DOOR OPENING TRIM WEATHERSTRIP (for 5 Door)
(a) Install the rear door opening trim weatherstrip.

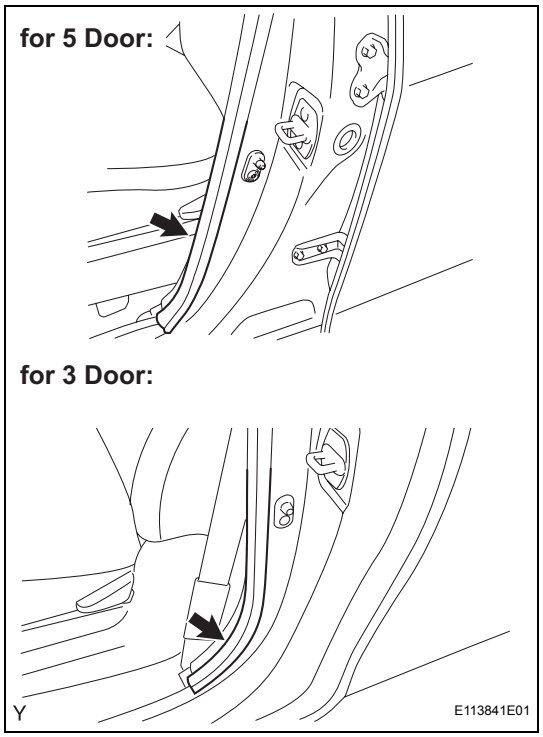

4. **INSTALL FRONT DOOR OPENING TRIM WEATHERSTRIP**
   (a) Install the front door opening trim weatherstrip.
5. **INSTALL REAR DOOR SCUFF PLATE (for 5 Door) (See page IR-80)**
6. **INSTALL FRONT DOOR SCUFF PLATE (for 5 Door) (See page IR-82)**
7. **INSTALL FRONT DOOR SCUFF PLATE (for 3 Door) (See page IR-119)**
8. **CONNECT CABLE TO NEGATIVE BATTERY TERMINAL**
   Torque: 5.4 N*m (55 kgf*cm, 48 in.*lbf)

REAR DOOR COURTESY SWITCH

COMPONENTS

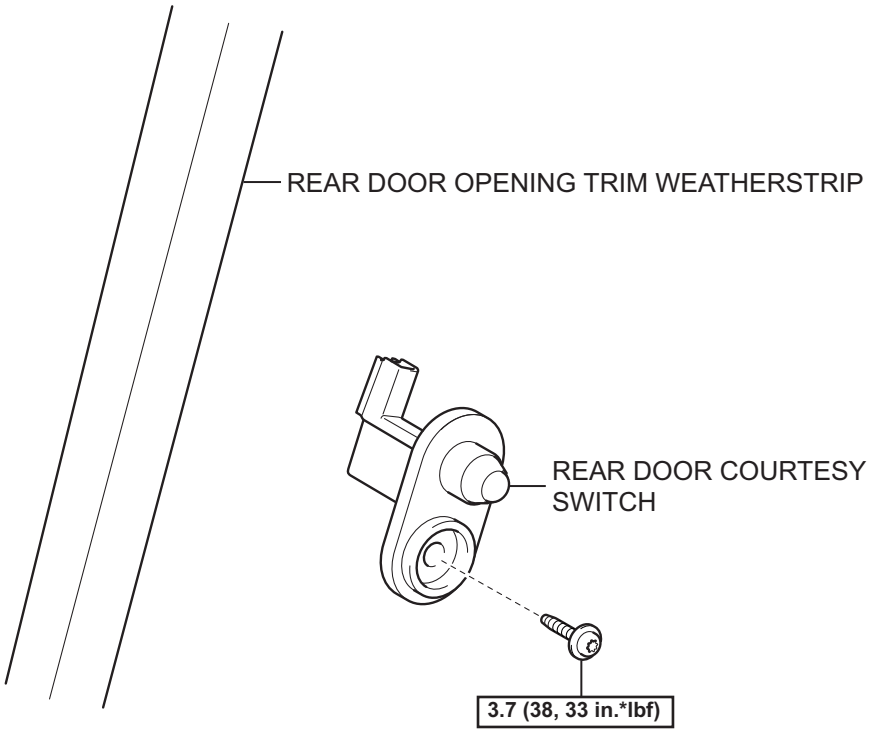

N*m (kgf*cm, ft*lbf) : Specified torque

Y

E114431E04

REMOVAL

HINT:
- Use the same procedure for both the RH and LH sides.
- The procedure described below is for the LH side.

1. DISCONNECT CABLE FROM NEGATIVE BATTERY TERMINAL

2. REMOVE REAR DOOR OPENING TRIM WEATHERSTRIP

(a) Remove the rear door opening trim weatherstrip.

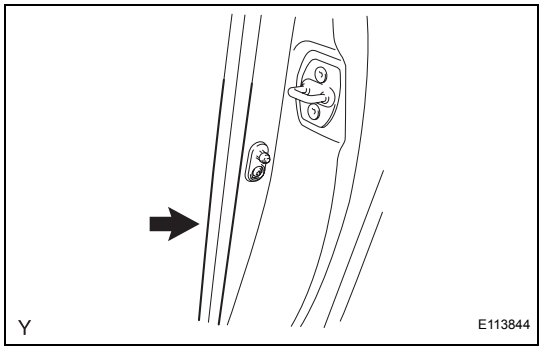

3. REMOVE REAR DOOR COURTESY SWITCH

(a) Disconnect the connector.

(b) Using "Torx" socket wrench T30, remove the screw and the rear door courtesy switch.

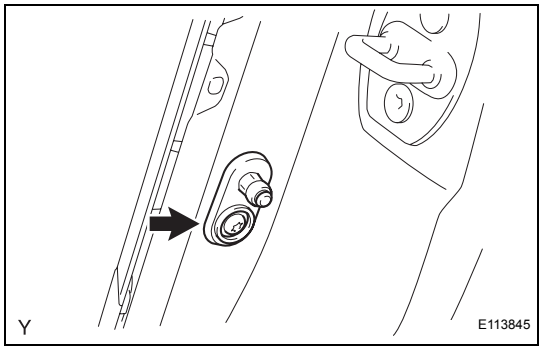

INSPECTION

1. INSPECT REAR DOOR COURTESY SWITCH

(a) Check the resistance.

(1) Using an ohmmeter, measure the resistance and check the results in accordance with the value(s) in the table below.

Standard Resistance

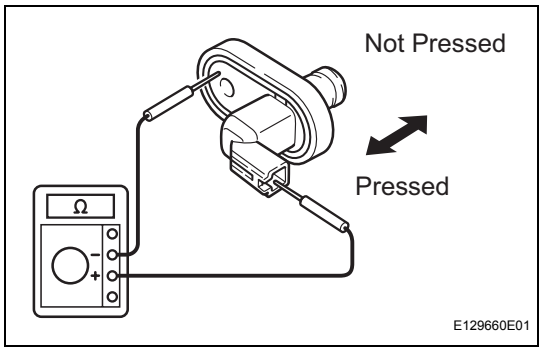

Tester Connection	Condition	Specified Condition
1 - Switch body	ON (Shaft not pressed)	Below 1 Ω
1 - Switch body	OFF (Shaft pressed)	10 kΩ or higher

If the result is not as specified, replace the rear door courtesy switch.

INSTALLATION

1. INSTALL REAR DOOR COURTESY SWITCH

(a) Using "Torx" socket wrench T30, install the rear door courtesy switch with the screw.

Torque: 3.7 N*m (38 kgf*cm, 33 in.*lbf)

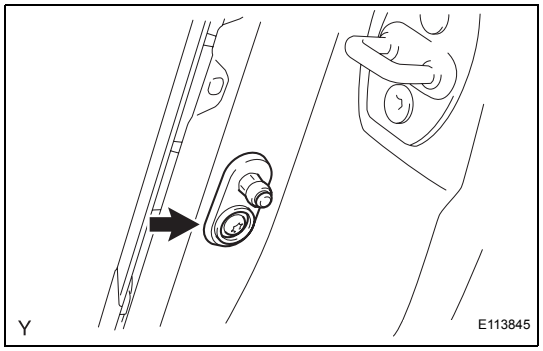

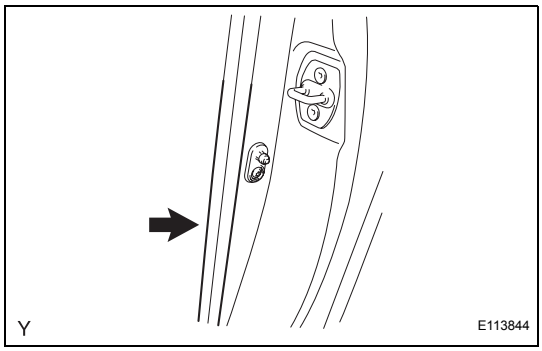

2. INSTALL REAR DOOR OPENING TRIM WEATHERSTRIP

(a) Install the rear door opening trim weatherstrip.

3. CONNECT CABLE TO NEGATIVE BATTERY TERMINAL

Torque: 5.4 N*m (55 kgf*cm, 48 in.*lbf)

BACK DOOR COURTESY SWITCH (for Sedan)

COMPONENTS

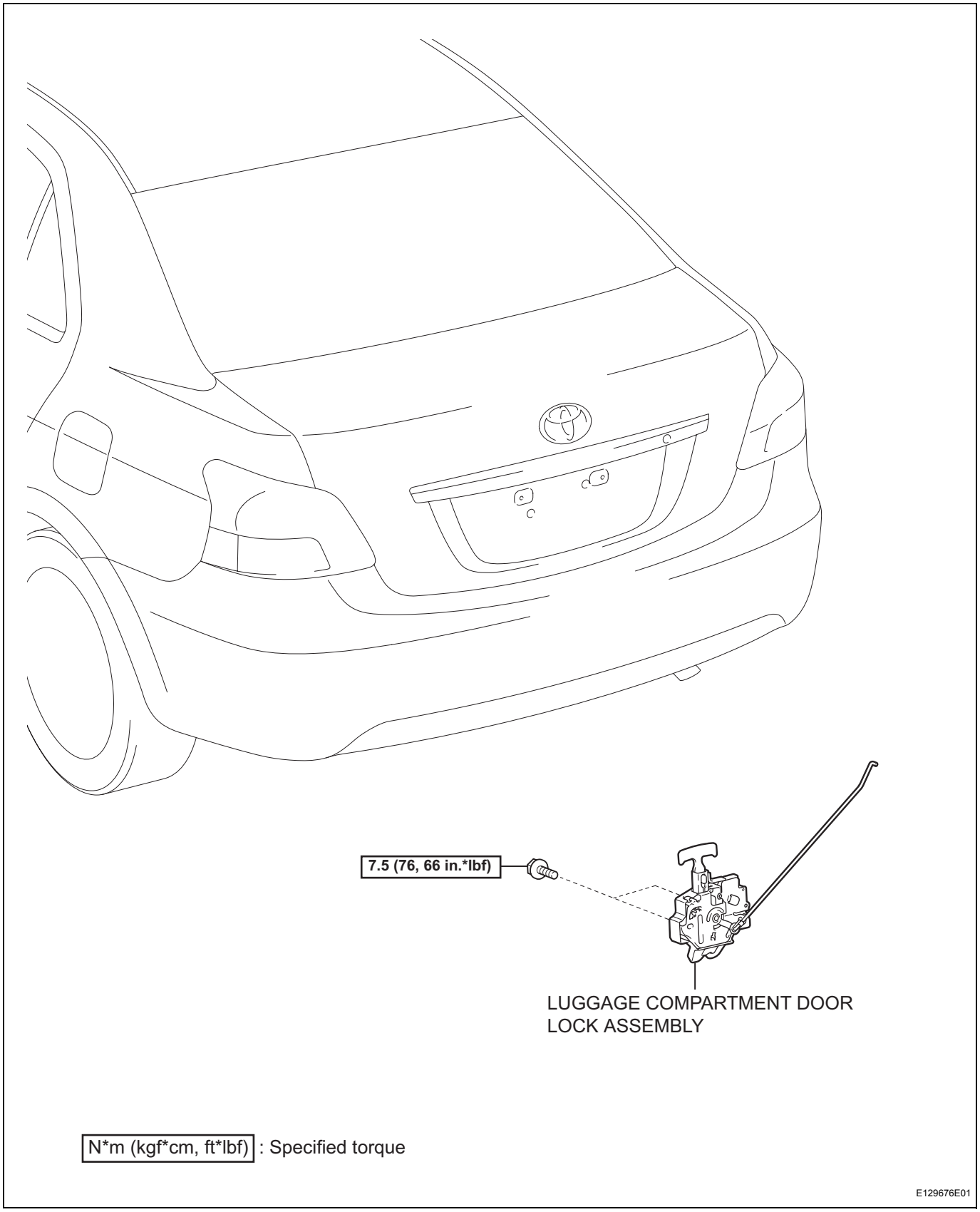

REMOVAL

1. DISCONNECT CABLE FROM NEGATIVE BATTERY TERMINAL

2. REMOVE LUGGAGE COMPARTMENT DOOR LOCK ASSEMBLY

(a) Remove the snap ring in the direction indicated by the arrow and remove the luggage compartment door lock link.

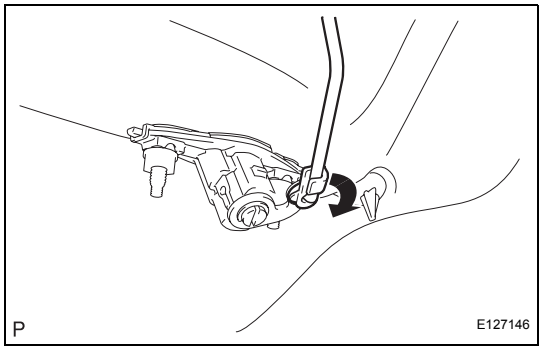

(b) Disconnect the connector.

(c) Disengage the claw and pull up the protector lid in the direction indicated by the arrow.

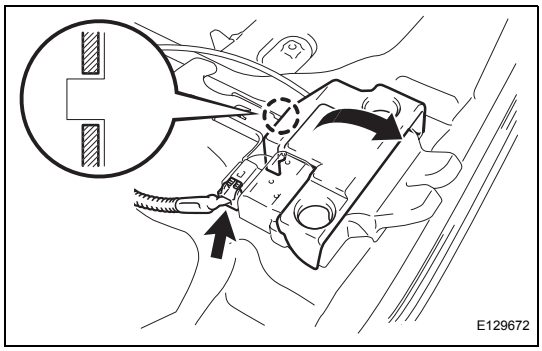

(d) Remove the luggage door lock control cable.

(e) Remove the 2 bolts and the luggage compartment door lock assembly.

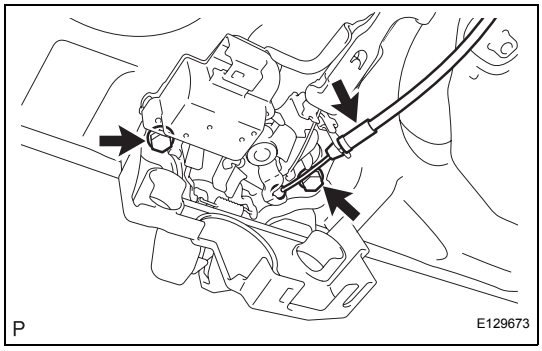

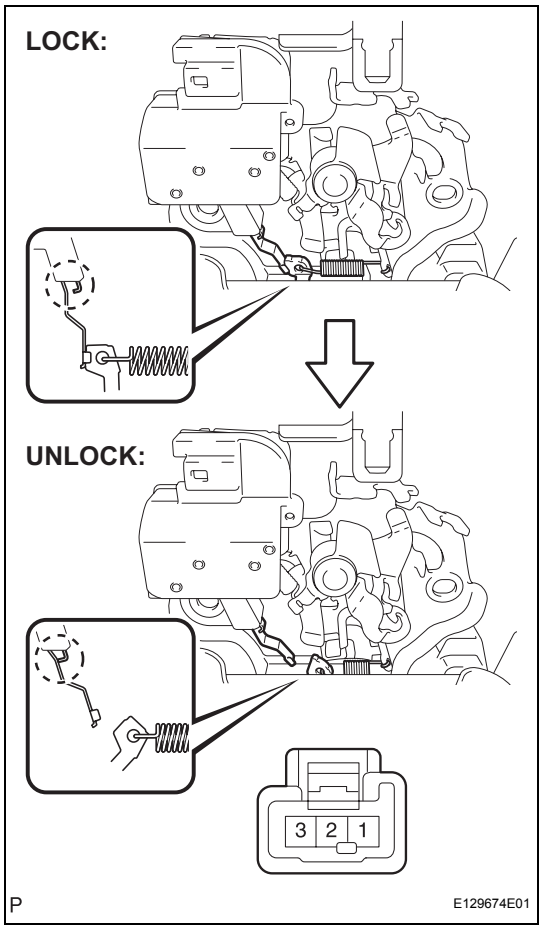

INSPECTION

1. INSPECT LUGGAGE COMPARTMENT DOOR LOCK ASSEMBLY

(a) Check the resistance of the back door courtesy switch.

(1) Using an ohmmeter, measure the resistance between the terminals when the latch is operated with a screwdriver.

Standard Resistance

Tester Connection	Condition	Specified Condition
1 - 2	Unlocked	Below 1 Ω
1 - 2	Locked	10 kΩ or higher

If the result is not as specified, replace the luggage compartment door lock assembly.

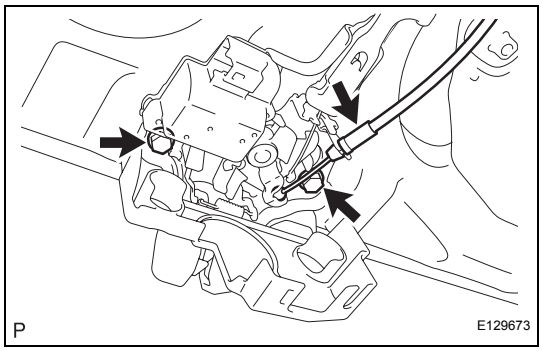

INSTALLATION

1. INSTALL LUGGAGE COMPARTMENT DOOR LOCK ASSEMBLY

(a) Install the luggage door lock control cable.

(b) Install the luggage compartment door lock assembly with the 2 bolts.

Torque: 7.5 N*m (76 kgf*cm, 66 in.*lbf)

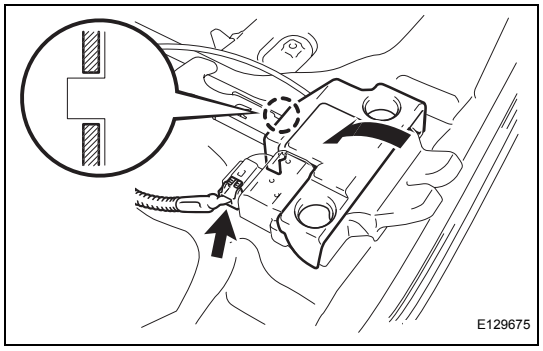

(c) Connect the connector.

(d) Install the protector lid.

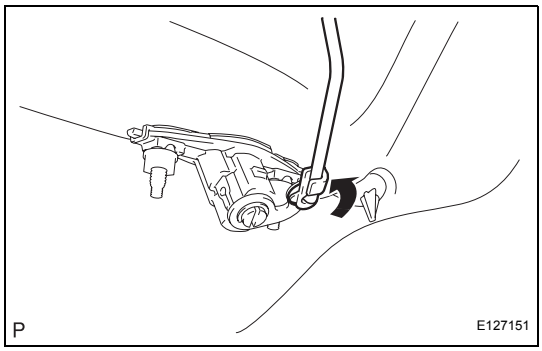

(e) Install the luggage compartment door lock link.

2. CONNECT CABLE TO NEGATIVE BATTERY TERMINAL
Torque: 5.4 N*m (55 kgf*cm, 48 in.*lbf)

BACK DOOR COURTESY SWITCH (for Hatchback)

COMPONENTS

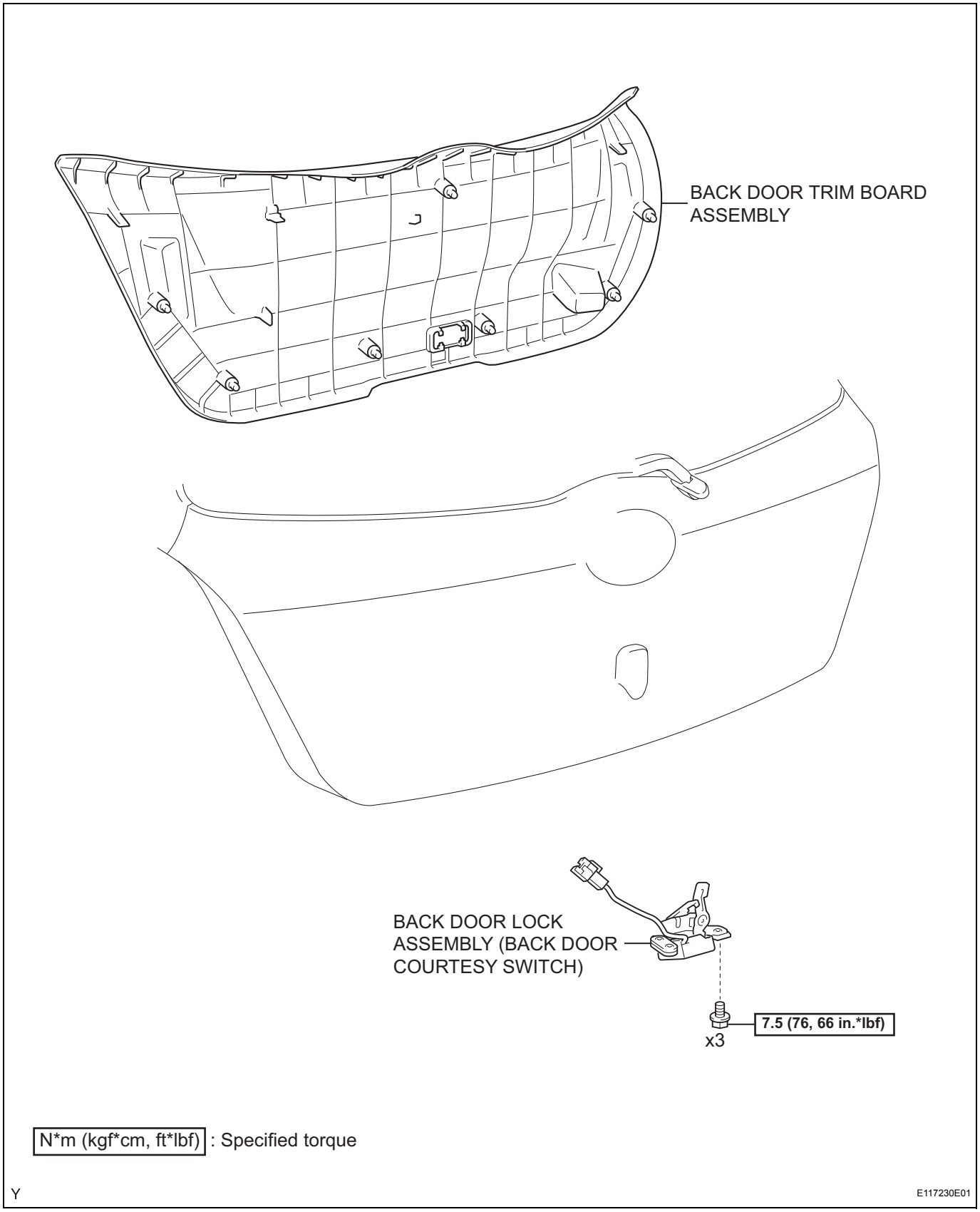

REMOVAL

1. **DISCONNECT CABLE FROM NEGATIVE BATTERY TERMINAL**
2. **REMOVE BACK DOOR TRIM BOARD ASSEMBLY (See page ED-142)**
3. **REMOVE BACK DOOR LOCK ASSEMBLY**
   (a) Disconnect the connector and clamp.
   (b) Remove the 3 bolts and the back door lock.

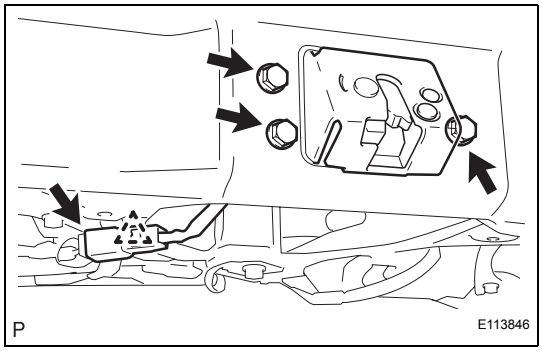

INSPECTION

1. **INSPECT BACK DOOR LOCK ASSEMBLY**
   (a) Check the resistance of the back door courtesy switch.
      (1) Using an ohmmeter, measure the resistance between the terminals when the latch is operated with a screwdriver.
      Standard Resistance

Tester Connection	Condition	Specified Condition
1 - 2	Unlocked	Below 1 Ω
1 - 2	Locked	10 kΩ or higher

If the result is not as specified, replace the back door lock.

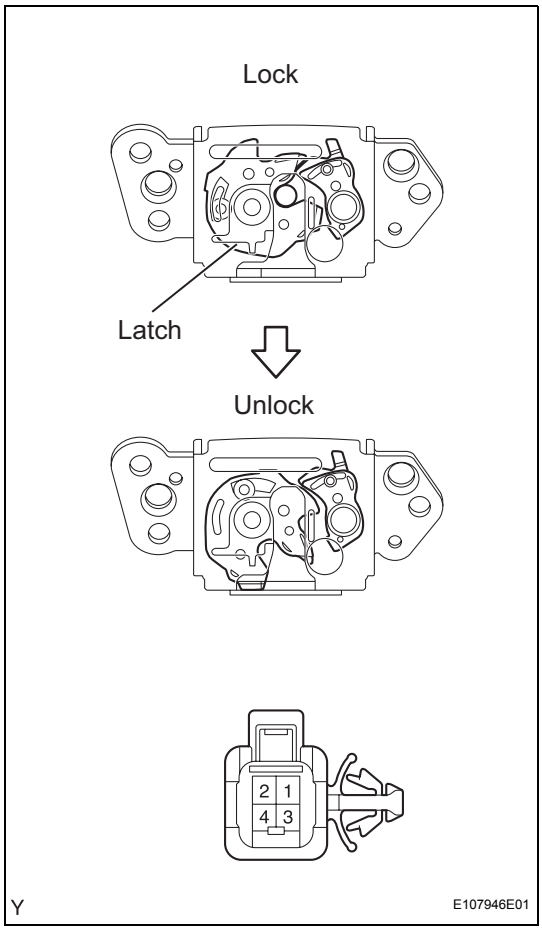

INSTALLATION

1. **INSTALL BACK DOOR LOCK ASSEMBLY**
   (a) Install the back door lock with the 3 bolts.
   Torque: 7.5 N*m (76 kgf*cm, 66 in.*lbf)
   (b) Connect the connector and clamp.
2. **INSTALL BACK DOOR TRIM BOARD ASSEMBLY (See page ED-146)**

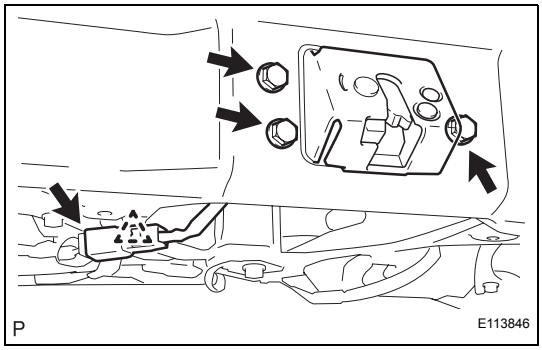

3. **CONNECT CABLE TO NEGATIVE BATTERY TERMINAL**
   Torque: 5.4 N*m (55 kgf*cm, 48 in.*lbf)

Main Body ECU
Connector Front View:

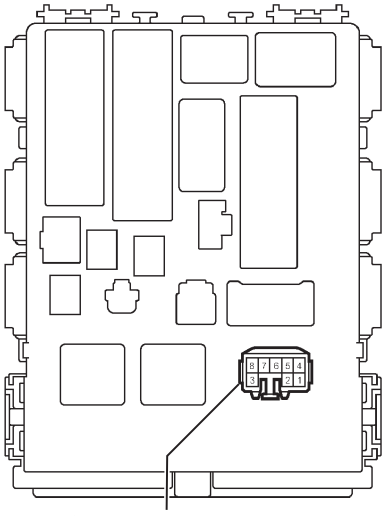

H I042805E02

TURN SIGNAL FLASHER ASSEMBLY

ON-VEHICLE INSPECTION

1. INSPECT TURN SIGNAL FLASHER CIRCUIT

(a) Check the power source circuit and ground circuit.

(1) Remove the turn signal flasher relay from the main body ECU.

(2) Measure the voltage and check the results in accordance with the value(s) in the table below.

Standard Voltage

Tester Connection	Condition	Specified Condition
1 - Body ground	Ignition switch OFF	0 V
1 - Body ground	Ignition switch ON	11 to 14 V
4 - Body ground	Always	11 to 14 V

(3) Measure the resistance and check the result in accordance with the value(s) in the table below.

Standard Resistance

Tester Connection	Condition	Specified Condition
7 - Body ground	Always	Below 1 Ω

(b) Check the output operation signal.

(1) Install the turn signal flasher relay onto the main body ECU.

Main Body ECU
(Front Side) Wire Harness View:

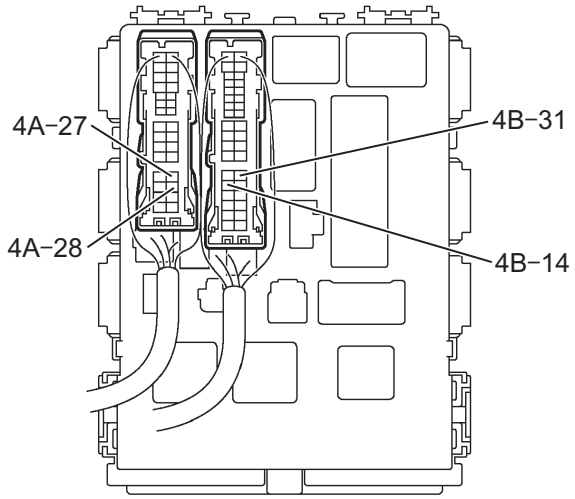

(Rear Side) Wire Harness View:

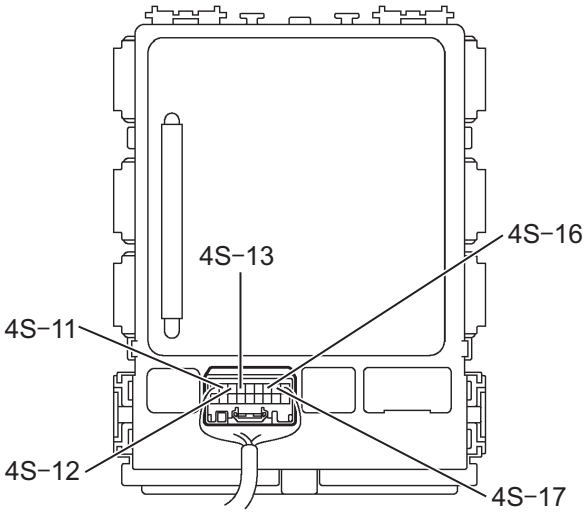

H I042806E02

(2) Measure the voltage and check the results in accordance with the values in the table below.

Standard

Tester Connection	Condition	Specified Condition
4A-27 - Body ground	Hazard warning switch OFF → ON	0 V → 11 to 14 V (60 to 120 times per minute)
4A-27 - Body ground	Turn signal switch (left turn) OFF → ON	0 V → 11 to 14 V (60 to 120 times per minute)
4A-28 - Body ground	Hazard warning switch OFF → ON	0 V → 11 to 14 V (60 to 120 times per minute)
4A-28 - Body ground	Turn signal switch (right turn) OFF → ON	0 V → 11 to 14 V (60 to 120 times per minute)
4B-14 - Body ground	Hazard warning switch OFF → ON	0 V → 11 to 14 V (60 to 120 times per minute)
4B-14 - Body ground	Turn signal switch (left turn) OFF → ON	0 V → 11 to 14 V (60 to 120 times per minute)
4B-31 - Body ground	Hazard warning switch OFF → ON	0 V → 11 to 14 V (60 to 120 times per minute)
4B-31 - Body ground	Turn signal switch (right turn) OFF → ON	0 V → 11 to 14 V (60 to 120 times per minute)
4S-11 - Body ground	Turn signal switch (left turn) OFF → ON	11 to 14 V → 0 V
4S-12 - Body ground	Turn signal switch (right turn) OFF → ON	11 to 14 V → 0 V
4S-13 - Body ground	Hazard warning switch OFF → ON	0 V → 11 to 14 V (60 to 120 times per minute)
4S-13 - Body ground	Turn signal switch (left turn) OFF → ON	0 V → 11 to 14 V (60 to 120 times per minute)
4S-16 - Body ground	Hazard warning switch OFF → ON	0 V → 11 to 14 V (60 to 120 times per minute)
4S-16 - Body ground	Turn signal switch (right turn) OFF → ON	0 V → 11 to 14 V (60 to 120 times per minute)
4S-17 - Body ground	Hazard warning switch OFF → ON	11 to 14 V → 0 V

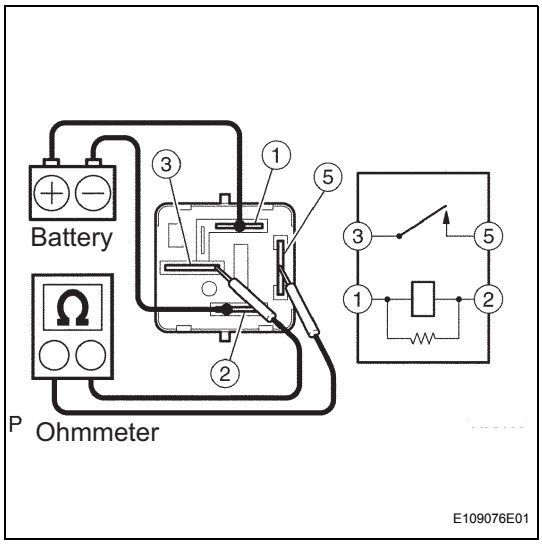

HEADLIGHT RELAY

ON-VEHICLE INSPECTION

1. INSPECT HEADLIGHT RELAY

(a) Check the resistance.

(1) Using an ohmmeter, measure the resistance between the terminals.

Standard Resistance

Tester Connection	Specified Condition
3 - 5	10 kΩ or higher
3 - 5	Below 1 Ω (Battery voltage applied to terminals 1 and 2)

If the result is not as specified, replace the headlight relay.

FOG LIGHT RELAY (for Sedan)

COMPONENTS

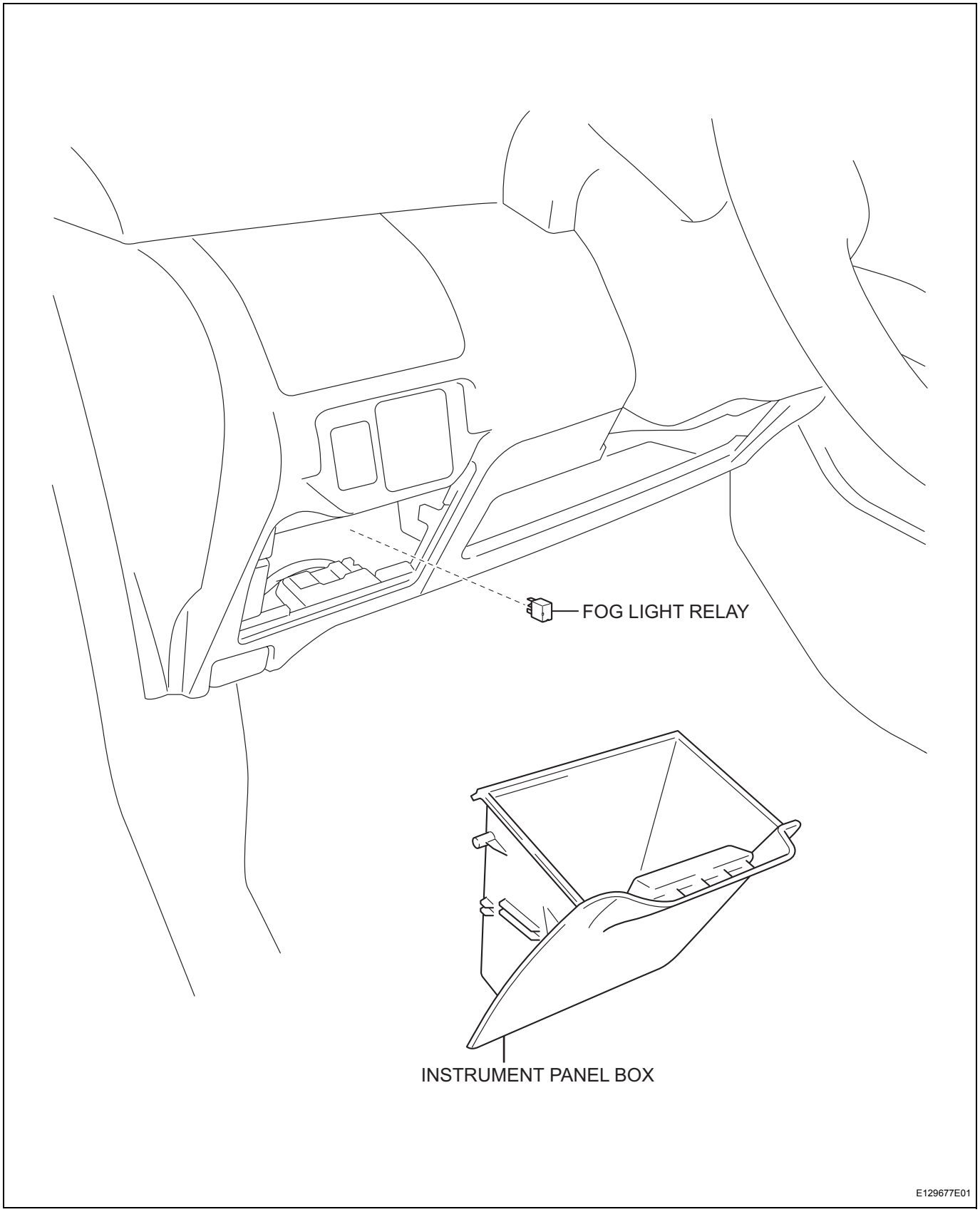

REMOVAL

1. **DISCONNECT CABLE FROM NEGATIVE BATTERY TERMINAL**
2. **REMOVE INSTRUMENT PANEL BOX (See page IP-45)**
3. **REMOVE FOG LIGHT RELAY**
   (a) Remove the fog light relay.

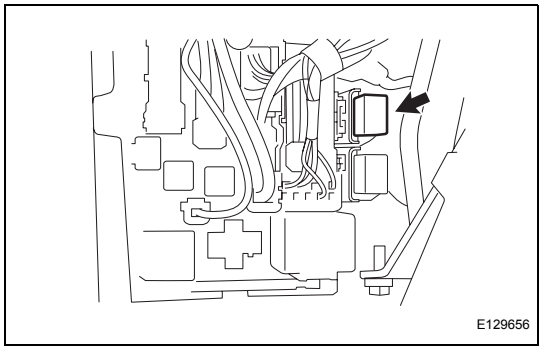

INSPECTION

1. **INSPECT FOG LIGHT RELAY**
   (a) Check the resistance.
      (1) Using an ohmmeter, measure the resistance between the terminals.
      Standard Resistance

Tester Connection	Specified Condition
3 - 5	10 kΩor higher
3 - 5	Below 1 Ω (Battery voltage applied to terminals 1 and 2)

If the result is not as specified, replace the fog light relay.

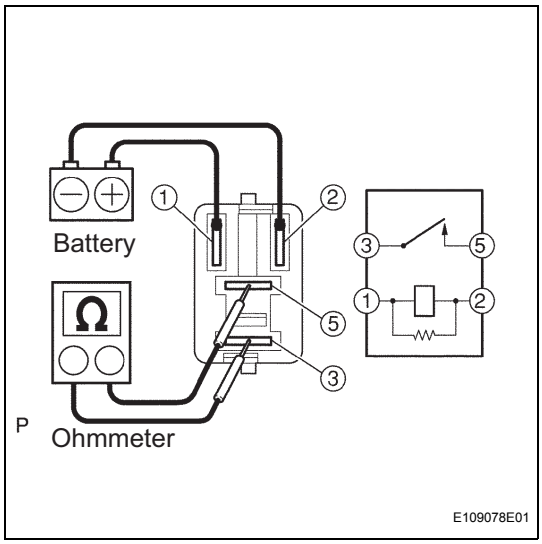

INSTALLATION

1. **INSTALL FOG LIGHT RELAY**
   (a) Install the fog light relay.
2. **INSTALL INSTRUMENT PANEL BOX (See page IP-53)**
3. **CONNECT CABLE TO NEGATIVE BATTERY TERMINAL**
   Torque: 5.4 N*m (55 kgf*cm, 48 in.*lbf)

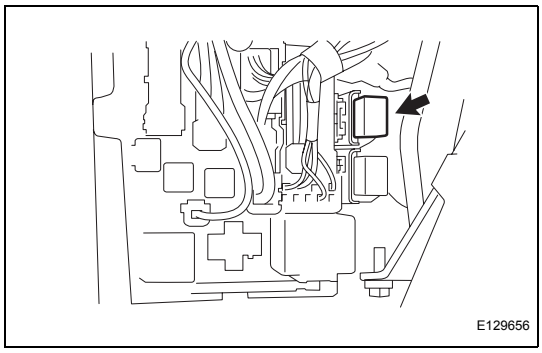

FOG LIGHT RELAY (for Hatchback)

COMPONENTS

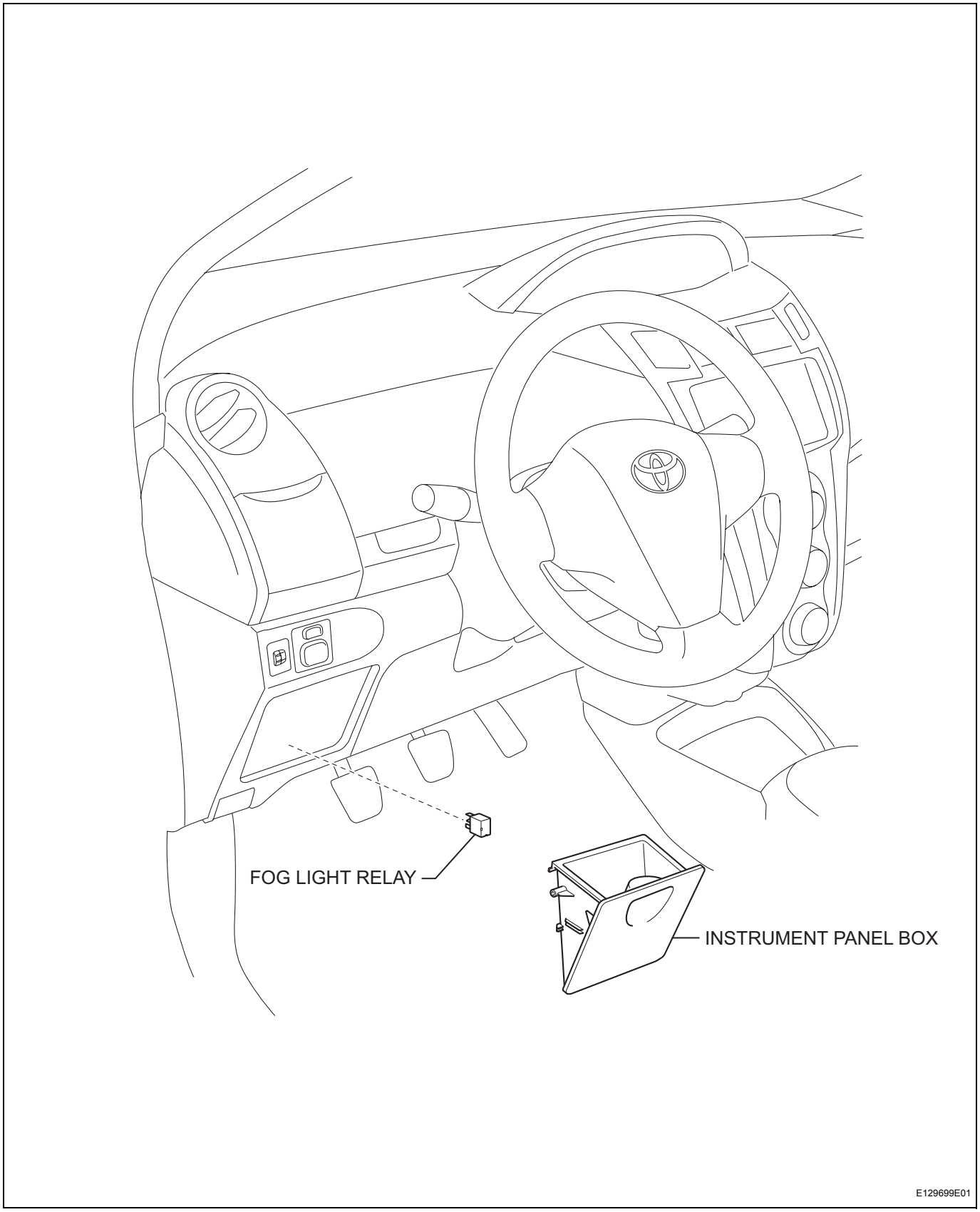

REMOVAL

1. **DISCONNECT CABLE FROM NEGATIVE BATTERY TERMINAL**
2. **REMOVE INSTRUMENT PANEL BOX (See page IP-70)**
3. **REMOVE FOG LIGHT RELAY**
   (a) Remove the fog light relay.

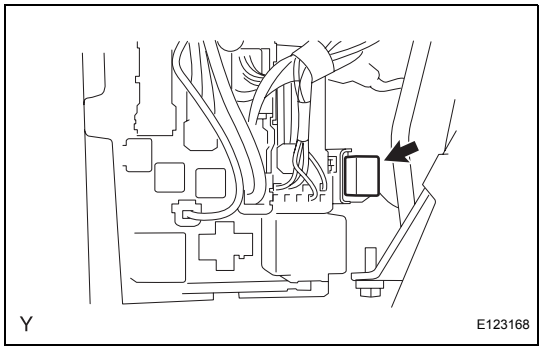

INSPECTION

1. **INSPECT FOG LIGHT RELAY**
   (a) Check the resistance.
      (1) Using an ohmmeter, measure the resistance between the terminals.
      Standard Resistance

Tester Connection	Specified Condition
3 - 5	10 kΩor higher
3 - 5	Below 1 Ω (Battery voltage applied to terminals 1 and 2)

If the result is not as specified, replace the fog light relay.

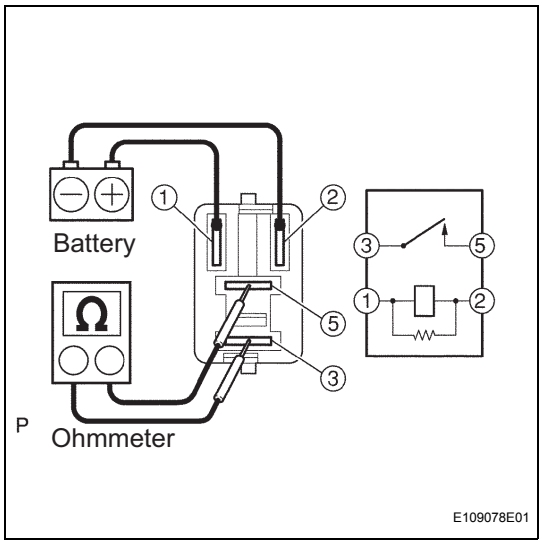

INSTALLATION
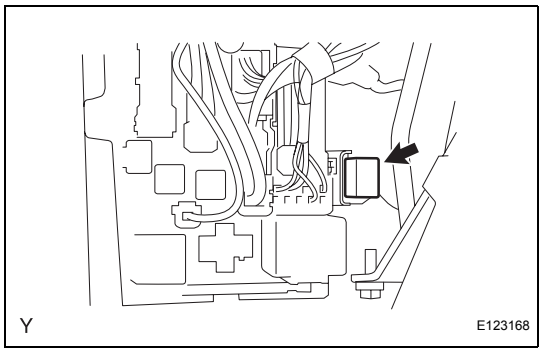
1. **INSTALL FOG LIGHT RELAY**
   (a) Install the fog light relay.
2. **INSTALL INSTRUMENT PANEL BOX (See page IP-78)**
3. **CONNECT CABLE TO NEGATIVE BATTERY TERMINAL**
   Torque: 5.4 N*m (55 kgf*cm, 48 in.*lbf)