SECTION IP
INSTRUMENT PANEL

CONTENTS

PRECAUTION 2

PRECAUTIONS 2
Precaution for Supplemental Restraint System (SRS) "AIR BAG" and "SEAT BELT PRE-TENSIONER" 2
Precaution for Work 2

PREPARATION 3

PREPARATION 3
Special Service Tool 3
Commercial Service Tools 3

CLIP LIST 4
Descriptions for Clips 4

SYMPTOM DIAGNOSIS 8

SQUEAK AND RATTLE TROUBLE DIAGNOSES 8
Work Flow 8
Generic Squeak and Rattle Troubleshooting 9
Diagnostic Worksheet 12

REMOVAL AND INSTALLATION 14

INSTRUMENT PANEL ASSEMBLY 14
Exploded View 14
Removal and Installation 15

STEERING COLUMN COVERS 16
Removal and Installation 16

CLUSTER LID A 17
Removal and Installation 17

INSTRUMENT LOWER PANEL LH 18
Removal and Installation 18

CLUSTER LID C 19
Removal and Installation 19

CLUSTER LID D 21
Removal and Installation 21

UPPER GLOVE BOX 23
Removal and Installation 23

INSTRUMENT LOWER PANEL RH AND GLOVE BOX 24
Removal and Installation 24

SHIFT SELECTOR FINISHER 25
Removal and Installation 25

CENTER CONSOLE 26
Removal and Installation 26

UNIT DISASSEMBLY AND ASSEMBLY 27

INSTRUMENT LOWER PANEL RH AND GLOVE BOX 27
Exploded View 27
Disassembly and Assembly 27

CENTER CONSOLE ASSEMBLY 29
Exploded View 29
Disassembly and Assembly 29

PRECAUTION

PRECAUTIONS

Precaution for Supplemental Restraint System (SRS) "AIR BAG" and "SEAT BELT PRE-TENSIONER"

INFOID:0000000010118348

The Supplemental Restraint System such as “AIR BAG” and “SEAT BELT PRE-TENSIONER”, used along with a front seat belt, helps to reduce the risk or severity of injury to the driver and front passenger for certain types of collision. This system includes seat belt switch inputs and dual stage front air bag modules. The SRS system uses the seat belt switches to determine the front air bag deployment, and may only deploy one front air bag, depending on the severity of a collision and whether the front occupants are belted or unbelted.
Information necessary to service the system safely is included in the SR and SB section of this Service Manual.

WARNING:

- **To avoid rendering the SRS inoperative, which could increase the risk of personal injury or death in the event of a collision which would result in air bag inflation, all maintenance must be performed by an authorized NISSAN/INFINITI dealer.**
- **Improper maintenance, including incorrect removal and installation of the SRS, can lead to personal injury caused by unintentional activation of the system. For removal of Spiral Cable and Air Bag Module, see the SR section.**
- **Do not use electrical test equipment on any circuit related to the SRS unless instructed to in this Service Manual. SRS wiring harnesses can be identified by yellow and/or orange harnesses or harness connectors.**

PRECAUTIONS WHEN USING POWER TOOLS (AIR OR ELECTRIC) AND HAMMERS

WARNING:

- **When working near the Airbag Diagnosis Sensor Unit or other Airbag System sensors with the Ignition ON or engine running, DO NOT use air or electric power tools or strike near the sensor(s) with a hammer. Heavy vibration could activate the sensor(s) and deploy the air bag(s), possibly causing serious injury.**
- **When using air or electric power tools or hammers, always switch the Ignition OFF, disconnect the battery and wait at least three minutes before performing any service.**

Precaution for Work

INFOID:0000000009478543

- When removing or disassembling each component, be careful not to damage or deform it. If a component may be subject to interference, be sure to protect it with a shop cloth.
- When removing (disengaging) components with a screwdriver or similar tool, be sure to wrap the component with a shop cloth or vinyl tape to protect it.
- Protect the removed parts with a shop cloth and prevent them from being dropped.
- Replace a deformed or damaged clip.
- If a part is specified as a non-reusable part, always replace it with a new one.
- Be sure to tighten bolts and nuts securely to the specified torque.
- After installation is complete, be sure to check that each part works properly.
- Follow the steps below to clean components:
- Water soluble dirt:
- Dip a soft cloth into lukewarm water, wring the water out of the cloth and wipe the dirty area.
- Then rub with a soft, dry cloth.
- Oily dirt:
- Dip a soft cloth into lukewarm water with mild detergent (concentration: within 2 to 3%) and wipe the dirty area.
- Then dip a cloth into fresh water, wring the water out of the cloth and wipe the detergent off.
- Then rub with a soft, dry cloth.
- Do not use organic solvent such as thinner, benzene, alcohol or gasoline.
- For genuine leather seats, use a genuine leather seat cleaner.

PREPARATION

PREPARATION

Special Service Tool

INFOID:0000000009478544

The actual shape of the tools may differ from those illustrated here.

Tool number (TechMate No.) Tool name		Description
— (J-39570) Chassis Ear	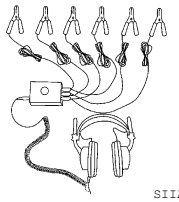 SIIA0993E	Locating the noise
— (J-50397) NISSAN Squeak and Rattle Kit	 ALJIA1232ZZ	Repairing the cause of noise
— (J-46534) Trim Tool Set	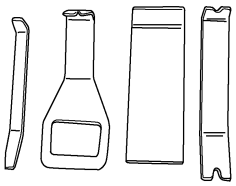 AWJIA0483ZZ	Removing trim components

Commercial Service Tools

INFOID:0000000009478545

Tool number (TechMate No.) Tool name		Description
— (J-39565) Engine Ear	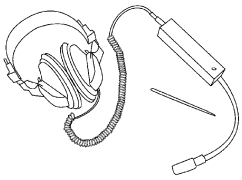 SIIA0995E	Locating the noise
— (—) Power tool	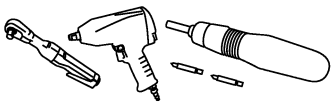 PIIB1407E	Loosening nuts, screws and bolts

CLIP LIST

Descriptions for Clips

INFOID:0000000009478546

Replace any clips which are damaged during removal or installation.

Symbol No.	Shapes	Removal & Installation
C101		**Removal:** Remove by bending up with flat-bladed screwdrivers or clip remover.
C103		**Removal:** Remove with a clip remover.
C203		**Removal:** Push center pin to catching position. (Do not remove center pin by hitting it.) Push **Installation:** Push
C205		**Removal:** Flat-bladed screwdriver Clip Finisher
C206		**Removal:**

SIIA0315E

Symbol No.	Shapes	Removal & Installation
CE103		**Removal:**
CF110	Clip A Clip B	**Removal:** Finisher Clip A Flat-bladed screwdrivers Clip B
CF118	Clip A Clip B (Grommet)	**Removal:** Flat-bladed screwdrivers Finisher Body panel Clip A Clip B (Grommet)
CR103		**Removal:** Holder portion of clip must be spread out to remove rod.
CS101		**Removal:** 1. Screw out with a Phillips screwdriver. 2. Remove female portion with flat-bladed screwdriver.

SIIA0316E

Symbol No.	Shapes	Removal & Installation	
CG101		**Removal:** Rotate 45˚ to remove **Removal:**	**Installation:**
CS102			
CS113		**Removal:** Disconnect upper connection of clip with a flat-bladed screwdriver, then remove clip while inserting a flat-bladed screwdriver between body panel and clip.	
C111			

SIIA0317E

Symbol No.	Shapes	Removal & Installation
CG104		**Removal:** **Remove by bending up with flat-bladed screwdrivers.** Radiator grille Body panel
CE114		
CF118	Clip A Clip B (Grommet)	**Removal:** Flat-bladed screwdrivers Finisher Body panel Clip A Clip B (Grommet)

ALJIA0564GB

SYMPTOM DIAGNOSIS

SQUEAK AND RATTLE TROUBLE DIAGNOSES

Work Flow

INFOID:0000000009478547

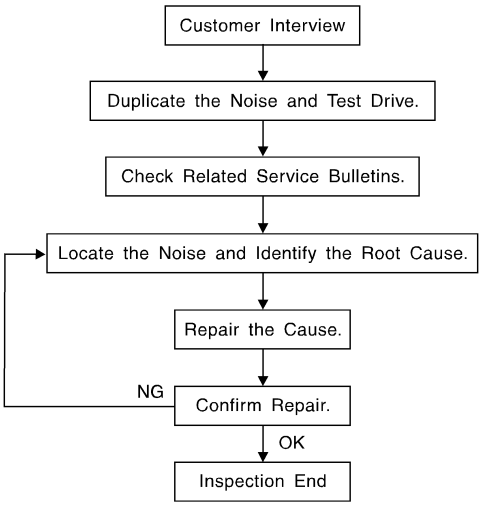

SBT842

CUSTOMER INTERVIEW

Interview the customer if possible, to determine the conditions that exist when the noise occurs. Use the Diagnostic Worksheet during the interview to document the facts and conditions when the noise occurs and any customer's comments; refer to IP-12, "Diagnostic Worksheet". This information is necessary to duplicate the conditions that exist when the noise occurs.

- The customer may not be able to provide a detailed description or the location of the noise. Attempt to obtain all the facts and conditions that exist when the noise occurs (or does not occur).
- If there is more than one noise in the vehicle, be sure to diagnose and repair the noise that the customer is concerned about. This can be accomplished by test driving the vehicle with the customer.
- After identifying the type of noise, isolate the noise in terms of its characteristics. The noise characteristics are provided so the customer, service adviser and technician are all speaking the same language when defining the noise.
- Squeak —(Like tennis shoes on a clean floor)
  Squeak characteristics include the light contact/fast movement/brought on by road conditions/hard surfaces = higher pitch noise/softer surfaces = lower pitch noises/edge to surface = chirping.
- Creak—(Like walking on an old wooden floor)
  Creak characteristics include firm contact/slow movement/twisting with a rotational movement/pitch dependent on materials/often brought on by activity.
- Rattle—(Like shaking a baby rattle)
  Rattle characteristics include the fast repeated contact/vibration or similar movement/loose parts/missing clip or fastener/incorrect clearance.
- Knock —(Like a knock on a door)
  Knock characteristics include hollow sounding/sometimes repeating/often brought on by driver action.
- Tick—(Like a clock second hand)
  Tick characteristics include gentle contacting of light materials/loose components/can be caused by driver action or road conditions.
- Thump—(Heavy, muffled knock noise)
  Thump characteristics include softer knock/dead sound often brought on by activity.
- Buzz—(Like a bumble bee)
  Buzz characteristics include high frequency rattle/firm contact.
- Often the degree of acceptable noise level will vary depending upon the person. A noise that you may judge as acceptable may be very irritating to the customer.
- Weather conditions, especially humidity and temperature, may have a great effect on noise level.

DUPLICATE THE NOISE AND TEST DRIVE

If possible, drive the vehicle with the customer until the noise is duplicated. Note any additional information on the Diagnostic Worksheet regarding the conditions or location of the noise. This information can be used to duplicate the same conditions when you confirm the repair.
If the noise can be duplicated easily during the test drive, to help identify the source of the noise, try to duplicate the noise with the vehicle stopped by doing one or all of the following:
1) Close a door.
2) Tap or push/pull around the area where the noise appears to be coming from.
3) Rev the engine.
4) Use a floor jack to recreate vehicle “twist”.
5) At idle, apply engine load (electrical load, half-clutch on M/T model, drive position on CVT and A/T models).
6) Raise the vehicle on a hoist and hit a tire with a rubber hammer.
- Drive the vehicle and attempt to duplicate the conditions the customer states exist when the noise occurs.
- If it is difficult to duplicate the noise, drive the vehicle slowly on an undulating or rough road to stress the vehicle body.

CHECK RELATED SERVICE BULLETINS

After verifying the customer concern or symptom, check ASIST for Technical Service Bulletins (TSBs) related to that concern or symptom.
If a TSB relates to the symptom, follow the procedure to repair the noise.

LOCATE THE NOISE AND IDENTIFY THE ROOT CAUSE

1. Narrow down the noise to a general area. To help pinpoint the source of the noise, use a listening tool (Chassis Ear: J-39570, Engine Ear: J-39565 and mechanic's stethoscope).
2. Narrow down the noise to a more specific area and identify the cause of the noise by:
   - removing the components in the area that you suspect the noise is coming from.
     Do not use too much force when removing clips and fasteners, otherwise clips and fasteners can be broken or lost during the repair, resulting in the creation of new noise.
   - tapping or pushing/pulling the component that you suspect is causing the noise.
     Do not tap or push/pull the component with excessive force, otherwise the noise will be eliminated only temporarily.
   - feeling for a vibration with your hand by touching the component(s) that you suspect is (are) causing the noise.
   - placing a piece of paper between components that you suspect are causing the noise.
   - looking for loose components and contact marks.
     Refer to IP-9, "Generic Squeak and Rattle Troubleshooting".

REPAIR THE CAUSE

- If the cause is a loose component, tighten the component securely.
- If the cause is insufficient clearance between components:
- separate components by repositioning or loosening and retightening the component, if possible.
- insulate components with a suitable insulator such as urethane pads, foam blocks, felt cloth tape or urethane tape. A NISSAN Squeak and Rattle Kit (J-50397) is available through your authorized NISSAN Parts Department.

CAUTION:
Do not use excessive force as many components are constructed of plastic and may be damaged.
NOTE:
- Always check with the Parts Department for the latest parts information.
- The materials contained in the NISSAN Squeak and Rattle Kit (J-50397) are listed on the inside cover of the kit; and can each be ordered separately as needed.
- The following materials not found in the kit can also be used to repair squeaks and rattles.
- SILICONE GREASE: Use instead of UHMW tape that will be visible or does not fit. The silicone grease will only last a few months.
- SILICONE SPRAY: Use when grease cannot be applied.
- DUCT TAPE: Use to eliminate movement.

CONFIRM THE REPAIR

Confirm that the cause of a noise is repaired by test driving the vehicle. Operate the vehicle under the same conditions as when the noise originally occurred. Refer to the notes on the Diagnostic Worksheet.

Generic Squeak and Rattle Troubleshooting

INFOID:0000000009478548

Refer to Table of Contents for specific component removal and installation information.

INSTRUMENT PANEL

Most incidents are caused by contact and movement between:

1. Cluster lid A and the instrument panel
2. Acrylic lens and combination meter housing
3. Instrument panel to front pillar finisher
4. Instrument panel to windshield
5. Instrument panel pins
6. Wiring harnesses behind the combination meter
7. A/C defroster duct and duct joint

These incidents can usually be located by tapping or moving the components to duplicate the noise or by pressing on the components while driving to stop the noise. Most of these incidents can be repaired by applying felt cloth tape or silicone spray (in hard to reach areas). Urethane pads can be used to insulate wiring harness.

CAUTION:

Do not use silicone spray to isolate a squeak or rattle. If you saturate the area with silicone, you will not be able to recheck the repair.

CENTER CONSOLE

Components to pay attention to include:

1. Shift selector assembly cover to finisher
2. A/C control unit and cluster lid C
3. Wiring harnesses behind audio and A/C control unit

The instrument panel repair and isolation procedures also apply to the center console.

DOORS

Pay attention to the:

1. Finisher and inner panel making a slapping noise
2. Inside handle escutcheon to door finisher
3. Wiring harnesses tapping
4. Door striker out of alignment causing a popping noise on starts and stops

Tapping or moving the components or pressing on them while driving to duplicate the conditions can isolate many of these incidents. You can usually insulate the areas with felt cloth tape or insulator foam blocks from the NISSAN Squeak and Rattle Kit (J-50397) to repair the noise.

TRUNK

Trunk noises are often caused by a loose jack or loose items put into the trunk by the owner.
In addition look for:

1. Trunk lid bumpers out of adjustment
2. Trunk lid striker out of adjustment
3. The trunk lid torsion bars knocking together
4. A loose license plate or bracket

Most of these incidents can be repaired by adjusting, securing or insulating the item(s) or component(s) causing the noise.

SUNROOF/HEADLINING

Noises in the sunroof/headlining area can often be traced to one of the following:

1. Sunroof lid, rail, linkage or seals making a rattle or light knocking noise
2. Sun visor shaft shaking in the holder
3. Front or rear windshield touching headlining and squeaking

Again, pressing on the components to stop the noise while duplicating the conditions can isolate most of these incidents. Repairs usually consist of insulating with felt cloth tape.

OVERHEAD CONSOLE (FRONT AND REAR)

Overhead console noises are often caused by the console panel clips not being engaged correctly. Most of these incidents are repaired by pushing up on the console at the clip locations until the clips engage.
In addition look for:

1. Loose harness or harness connectors.
2. Front console map/reading lamp lens loose.
3. Loose screws at console attachment points.

SEATS

When isolating seat noise it's important to note the position the seat is in and the load placed on the seat when the noise is present. These conditions should be duplicated when verifying and isolating the cause of the noise.

Cause of seat noise include:

1. Headrest rods and holder
2. A squeak between the seat pad cushion and frame
3. The rear seatback lock and bracket

These noises can be isolated by moving or pressing on the suspected components while duplicating the conditions under which the noise occurs. Most of these incidents can be repaired by repositioning the component or applying urethane tape to the contact area.

UNDERHOOD

Some interior noise may be caused by components under the hood or on the engine wall. The noise is then transmitted into the passenger compartment.

Causes of transmitted underhood noise include:

1. Any component installed to the engine wall
2. Components that pass through the engine wall
3. Engine wall mounts and connectors
4. Loose radiator installation pins
5. Hood bumpers out of adjustment
6. Hood striker out of adjustment

These noises can be difficult to isolate since they cannot be reached from the interior of the vehicle. The best method is to secure, move or insulate one component at a time and test drive the vehicle. Also, engine rpm or load can be changed to isolate the noise. Repairs can usually be made by moving, adjusting, securing, or insulating the component causing the noise.

Diagnostic Worksheet

INFOID:0000000009478549

Dear Customer:
We are concerned about your satisfaction with your vehicle. Repairing a squeak or rattle sometimes can be very difficult. To help us fix your vehicle right the first time, please take a moment to note the area of the vehicle where the squeak or rattle occurs and under what conditions. You may be asked to take a test drive with a service advisor or technician to ensure we confirm the noise you are hearing.

SQUEAK & RATTLE DIAGNOSTIC WORKSHEET

I. WHERE DOES THE NOISE COME FROM? (circle the area of the vehicle)
The illustrations are for reference only, and may not reflect the actual configuration of your vehicle.

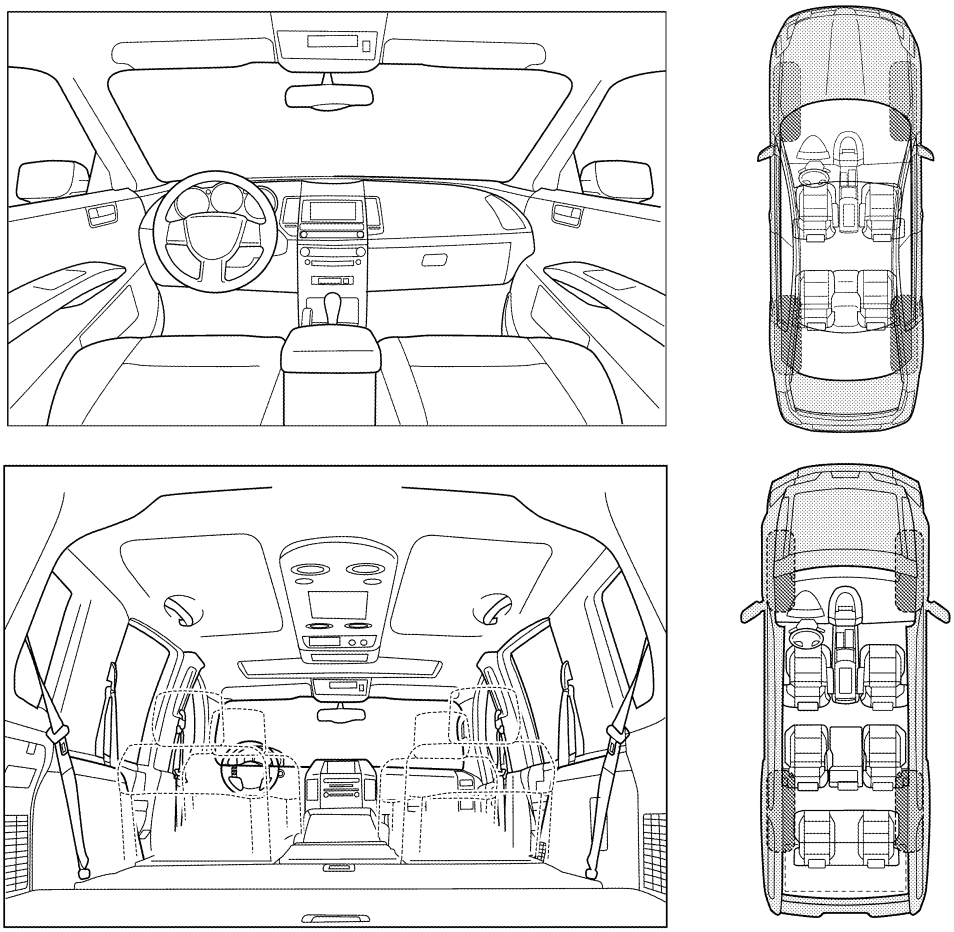

Continue to page 2 of the worksheet and briefly describe the location of the noise or rattle. In addition, please indicate the conditions which are present when the noise occurs.

-1-

LAIA0072E

SQUEAK & RATTLE DIAGNOSTIC WORKSHEET - page 2

Briefly describe the location where the noise occurs:

_____

_____

II. WHEN DOES IT OCCUR? (please check the boxes that apply)

- ☐ Anytime
- ☐ 1st time in the morning
- ☐ Only when it is cold outside
- ☐ Only when it is hot outside
- ☐ After sitting out in the rain
- ☐ When it is raining or wet
- ☐ Dry or dusty conditions
- ☐ Other:

III. WHEN DRIVING:

- ☐ Through driveways
- ☐ Over rough roads
- ☐ Over speed bumps
- ☐ Only about ____ mph
- ☐ On acceleration
- ☐ Coming to a stop
- ☐ On turns: left, right or either (circle)
- ☐ With passengers or cargo
- ☐ Other: _____
- ☐ After driving _____ miles or _____ minutes

IV. WHAT TYPE OF NOISE

- ☐ Squeak (like tennis shoes on a clean floor)
- ☐ Creak (like walking on an old wooden floor)
- ☐ Rattle (like shaking a baby rattle)
- ☐ Knock (like a knock at the door)
- ☐ Tick (like a clock second hand)
- ☐ Thump (heavy muffled knock noise)
- ☐ Buzz (like a bumble bee)

TO BE COMPLETED BY DEALERSHIP PERSONNEL

Test Drive Notes:

_____

_____

_____

	YES	NO	Initials of person performing
Vehicle test driven with customer	☐	☐	_____
- Noise verified on test drive	☐	☐	_____
- Noise source located and repaired	☐	☐	_____
- Follow up test drive performed to confirm repair	☐	☐	_____

VIN: _____ Customer Name _____

W.O.# _____ Date: _____

This form must be attached to Work Order

LAIA0071E

REMOVAL AND INSTALLATION

INSTRUMENT PANEL ASSEMBLY

Exploded View

INFOID:0000000009478550

SEC. 248 • 280 • 487 • 680

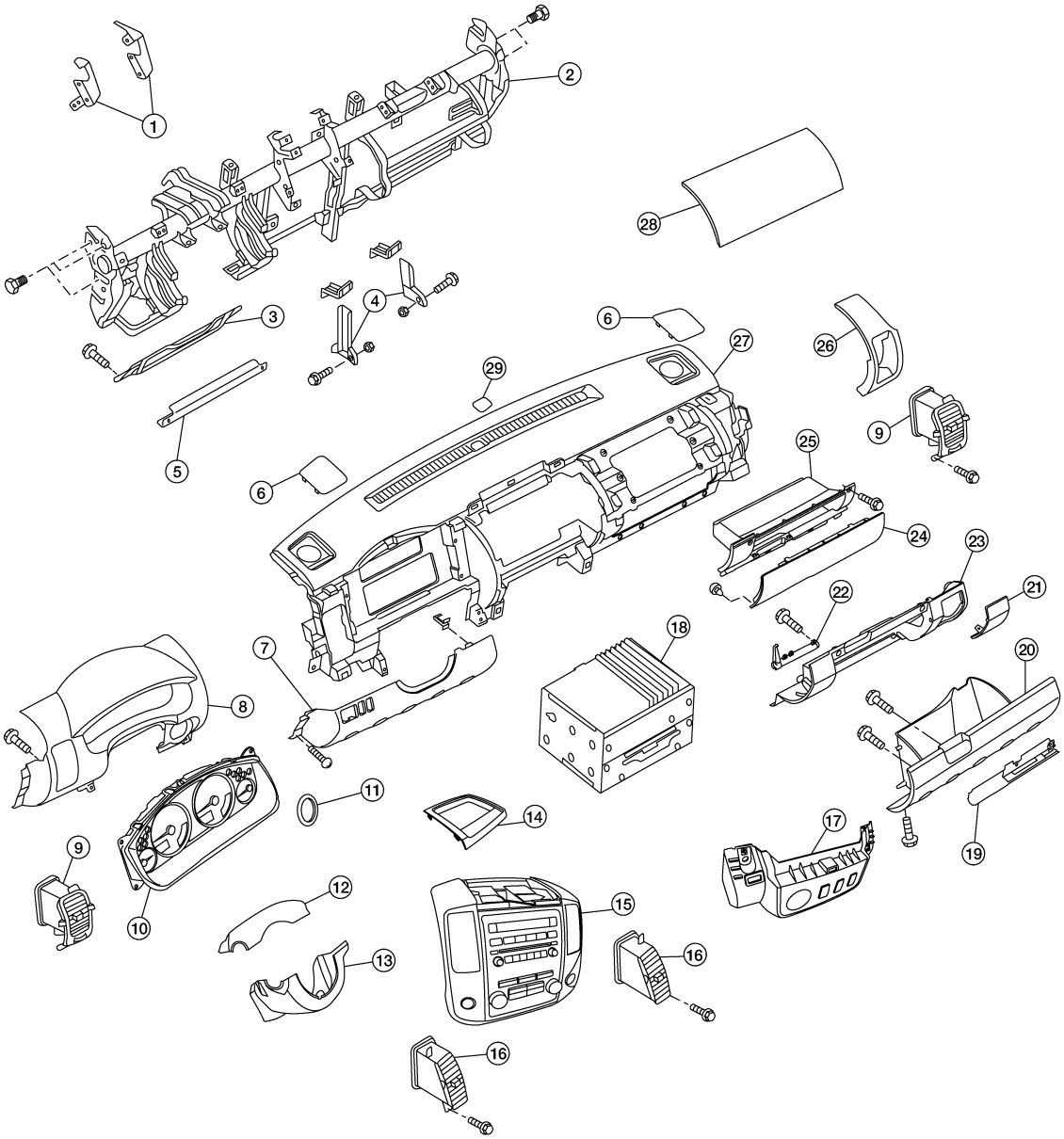

1.	Display unit bracket (RH/LH)	2.	Steering member assembly	3.	Knee protector
4.	Instrument stay (RH/LH)	5.	Knee protector brace	6.	Speaker grille (RH/LH)
7.	Instrument lower panel LH	8.	Cluster lid A	9.	Side ventilator assembly (RH/LH)
10.	Combination meter	11.	Steering lock escutcheon	12.	Steering column upper cover
13.	Steering column lower cover	14.	Storage tray	15.	Cluster lid C

16. Center ventilator assembly (RH/LH)	17. Cluster lid D	18. Audio unit
19. Lower glove box latch assembly	20. Lower glove box assembly	21. Fuse block cover
22. Lower glove box damper assembly	23. Instrument lower panel (RH)	24. Upper glove box door
25. Upper glove box lid	26. Instrument panel side cover RH	27. Instrument panel and pad assembly
28. Passenger air bag module	29. Sensor cover	

Removal and Installation

INFOID:0000000009478551

REMOVAL

CAUTION:

- **Be careful not to scratch the instrument panel pad or other parts.**
- **Before servicing, turn the ignition switch OFF, disconnect both battery terminals and wait at least three minutes.**

1. Disconnect the negative and positive battery negative terminals, then wait at least three minutes.
2. Remove the front pillar upper finishers (RH/LH). Refer to INT-19, "Removal and Installation".
3. Remove the combination meter. Refer to MWI-90, "Removal and Installation".
4. Remove audio unit (if equipped). Refer to AV-49, "Removal and Installation" (BASE AUDIO), AV-146, "Removal and Installation" (Display audio without amplifier) or AV-348, "Removal and Installation" (Display audio with amplifier).
5. Remove AV control unit (if equipped). Refer to AV-348, "Removal and Installation".
6. Remove cluster lid D. Refer to IP-21, "Removal and Installation".
7. Remove two bolts (through glove box opening) that retain front passenger air bag module to the steering member.
8. Disconnect the harness connectors from the passenger air bag module.
   - For removal/installation of the direct-connect SRS connectors, refer to SRC-9, "Direct-connect SRS Component Connectors".
9. Remove the instrument stay (RH/LH) bolts.
10. Disconnect all remaining harnesses and connectors.
11. Remove the instrument panel and pad assembly.

INSTALLATION

Installation is in the reverse order of removal.

STEERING COLUMN COVERS

Removal and Installation

INFOID:0000000009478552

REMOVAL

1. Remove instrument lower panel LH. Refer to IP-18, "Removal and Installation".
2. Remove the steering column cover screws and the steering column upper and lower covers.

INSTALLATION

Installation is in the reverse order of removal.

CLUSTER LID A

Removal and Installation

INFOID:0000000009478553

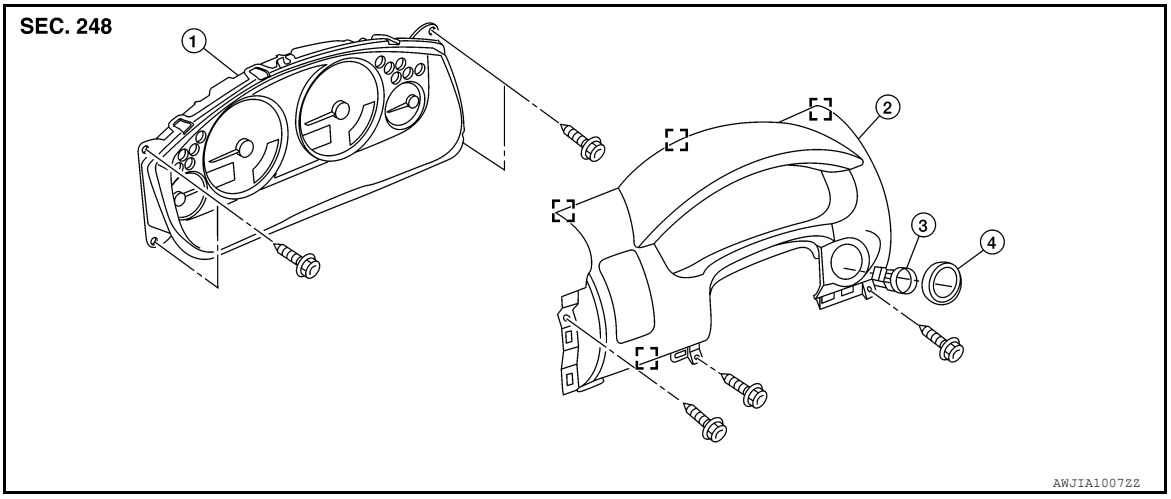

1. Combination meter
2. Cluster lid A
3. Ignition key lamp assembly
4. Steering lock escutcheon

Metal clip

REMOVAL

1. Remove instrument lower panel LH. Refer to IP-18, "Removal and Installation".
2. Using a suitable tool, remove the steering lock escutcheon.
3. Remove the cluster lid A screws.
4. Release the cluster lid A clips using a suitable tool and remove.

INSTALLATION

Installation is in the reverse order of removal.

INSTRUMENT LOWER PANEL LH

Removal and Installation

INFOID:0000000009478554

REMOVAL

1. Remove front pillar lower finisher (LH). Refer to INT-19, "Removal and Installation".
2. Remove instrument lower panel LH screws (A).
3. Release the instrument lower panel LH metal clips using a suitable tool and remove.
   : Metal Clip
4. Disconnect the harness connectors from instrument lower panel LH and remove.

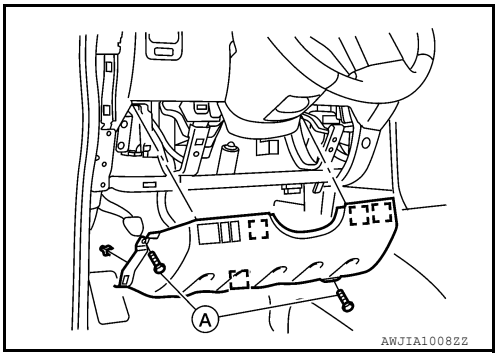

INSTALLATION

Installation is in the reverse order of removal.

CLUSTER LID C

Removal and Installation

INFOID:0000000009478555

TYPE 1

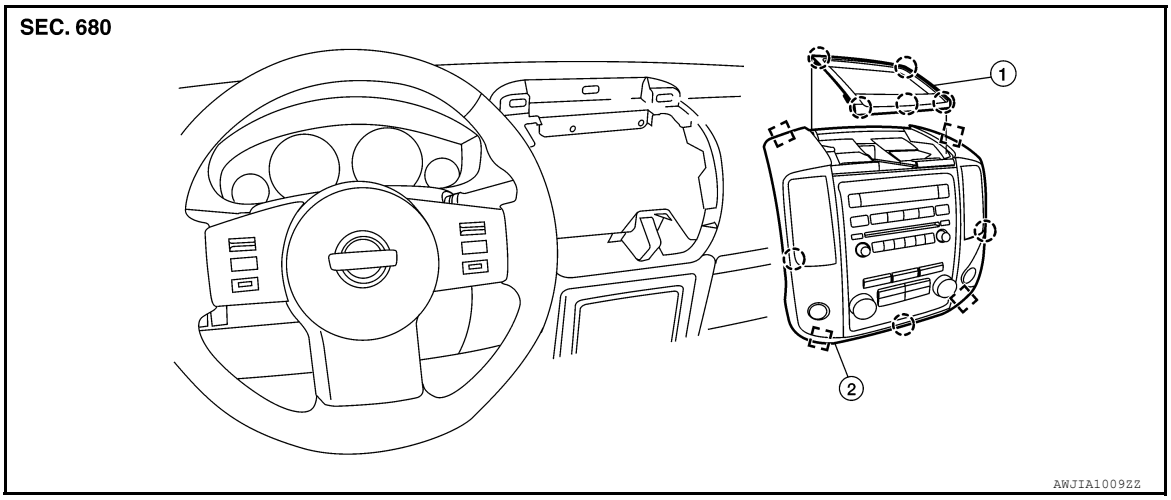

1. Storage tray
2. Cluster lid C

Pawl

Metal clip

Removal

1. Release the storage tray pawls using a suitable tool and remove.
2. Remove the cluster lid C screws (A).

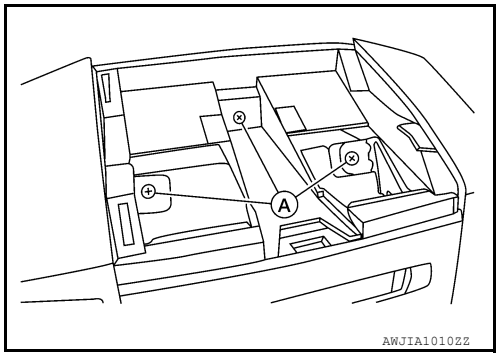

3. Release the cluster lid C metal clips and pawls using a suitable tool and remove.
4. Disconnect harness connectors from cluster lid C and remove.
5. Remove the audio unit from cluster lid C, if necessary. Refer to AV-49, "Removal and Installation".
6. Remove the front air control from cluster lid C, if necessary. Refer to VTL-7, "Removal and Installation".
7. Remove the hazard switch from cluster lid C, if necessary. Refer to EXL-148, "Removal and Installation".
8. Remove the passenger air bag indicator lamp from cluster lid C, if necessary. Refer to SR-15, "Removal and Installation".

Installation

Installation is in the reverse order of removal.

TYPE 2

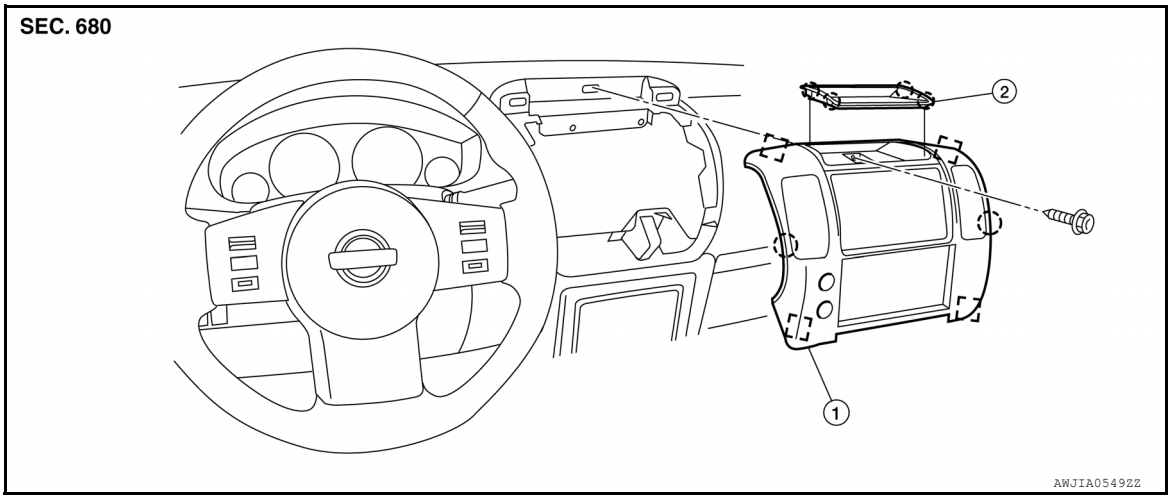

1. Cluster lid C
2. Storage tray

Pawl

Metal clip

Removal

1. Release the storage tray pawls using a suitable tool and remove.
2. Remove the cluster lid C screw.
3. Remove the cluster lid C clips using a suitable tool, disconnect the harness connectors and remove.

Installation

Installation is in the reverse order of removal.

CLUSTER LID D

Removal and Installation

INFOID:0000000009478556

TYPE 1

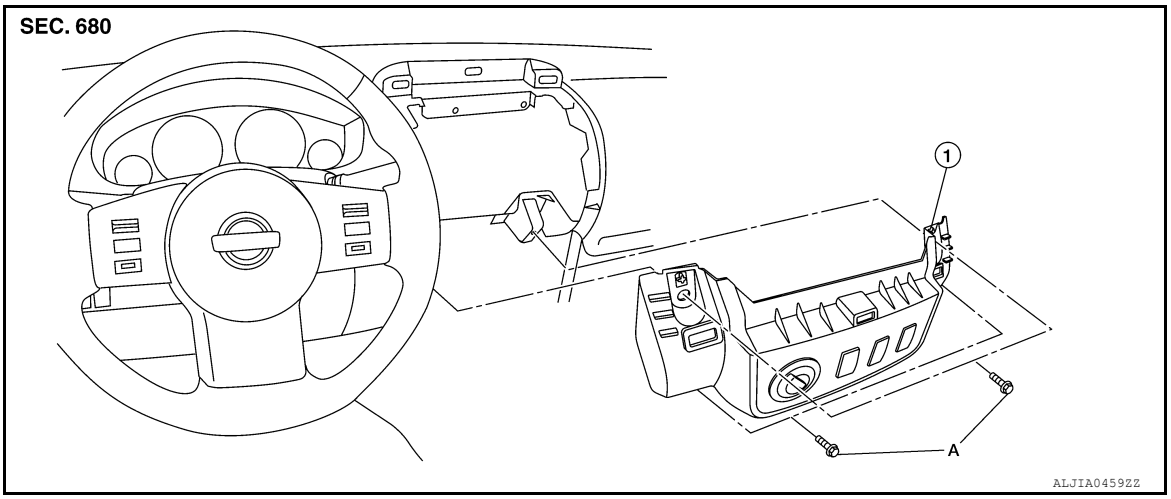

1. Cluster lid D
A. Cluster lid D screw

Removal

1. Remove center console. Refer to IP-26, "Removal and Installation".
2. Remove instrument lower panel LH. Refer to IP-18, "Removal and Installation".
3. Remove instrument lower panel RH and lower glove box assembly. Refer to IP-24, "Removal and Installation".
4. Remove cluster lid C. Refer to IP-19, "Removal and Installation".
5. Remove the cluster lid D screws.
6. Disconnect the harness connectors from cluster lid D and remove.

Installation

Installation is in the reverse order of removal.

TYPE 2

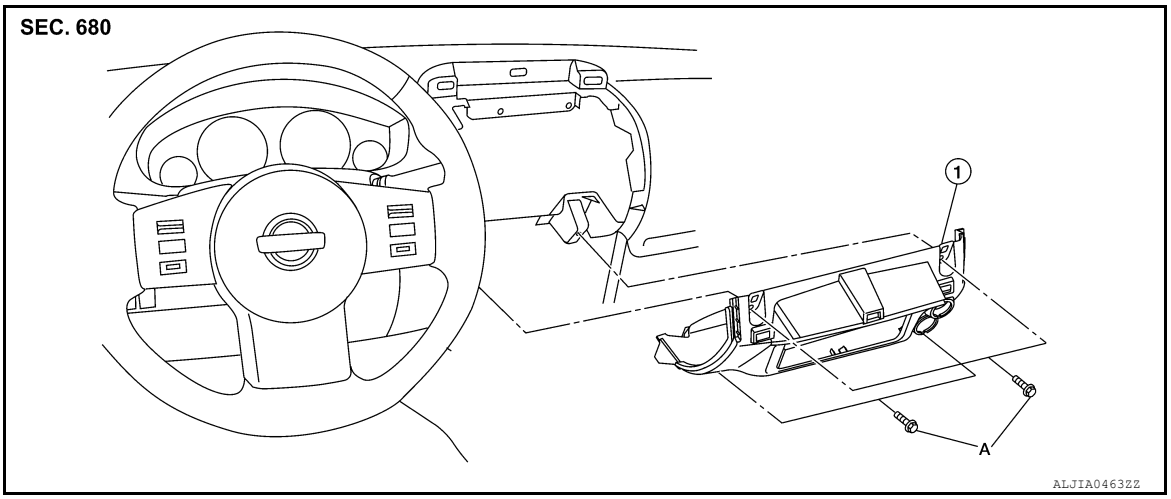

1. Cluster lid D
A. Cluster lid D screw

Removal

CLUSTER LID D

< REMOVAL AND INSTALLATION >

1. Remove center console. Refer to IP-26, "Removal and Installation".
2. Remove instrument lower panel LH. Refer to IP-18, "Removal and Installation".
3. Remove instrument lower panel RH and lower glove box assembly. Refer to IP-24, "Removal and Installation".
4. Remove cluster lid C. Refer to IP-19, "Removal and Installation".
5. Remove the cluster lid D screws.
6. Disconnect the harness connectors from cluster lid D and remove.

Installation

Installation is in the reverse order of removal.

UPPER GLOVE BOX

Removal and Installation

INFOID:0000000009478557

REMOVAL

1. Remove instrument lower panel RH and lower glove box assembly. Refer to IP-24, "Removal and Installation".
2. Remove upper glove box lid screws.
3. Remove upper glove box.

INSTALLATION

Installation is in the reverse order of removal.

INSTRUMENT LOWER PANEL RH AND GLOVE BOX

Removal and Installation

INFOID:0000000009478558

REMOVAL

1. Remove front pillar lower finisher (RH). Refer to INT-19, "Removal and Installation".
2. Remove instrument lower panel RH screws.
3. Remove instrument lower panel RH and lower glove box assembly.

INSTALLATION

Installation is in the reverse order of removal.

NOTE:

Install upper glove box before installing lower glove box if both have been removed.

SHIFT SELECTOR FINISHER

Removal and Installation

INFOID:0000000009478559

REMOVAL

1. Release the cup holder finisher clips using a suitable tool and remove.
2. Remove the shift selector handle (6MT: FS6R31A). Refer to TM-69, "Removal and Installation".
3. Release the shift slector finisher clips using a suitable tool and remove.
   ⇦: Front
   ⬚: Metal clip
   NOTE:
   A/T shift selector finisher shown; M/T shift selector finisher similar.

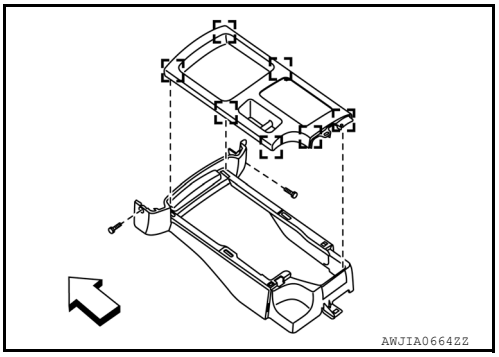

INSTALLATION

Installation is in the reverse order of removal.

CENTER CONSOLE

Removal and Installation

INFOID:0000000009478560

CENTER CONSOLE

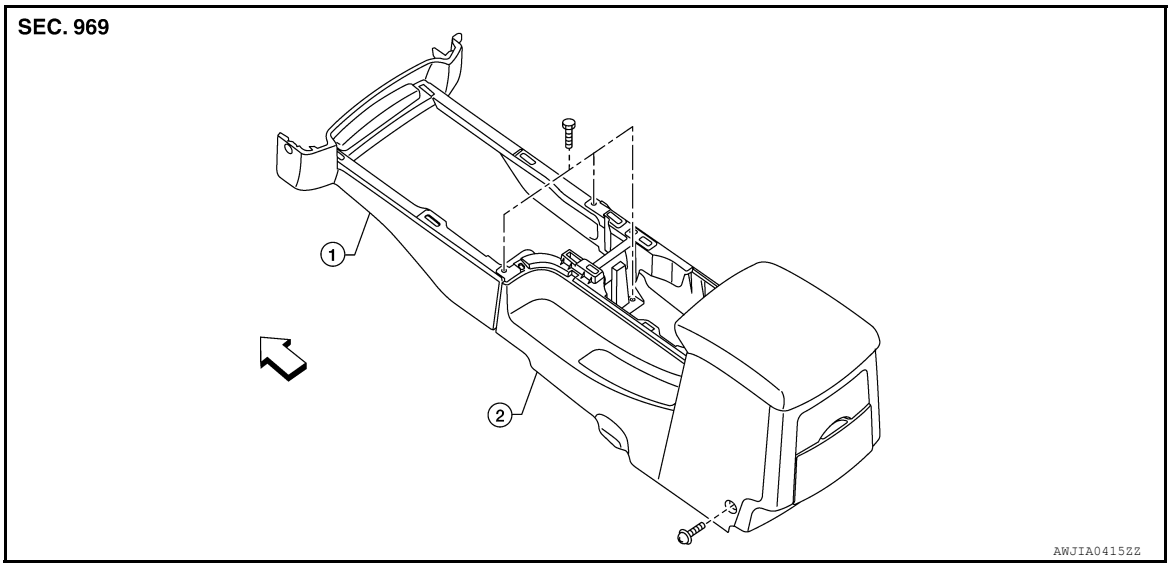

1. Center console front base
2. Center console rear base

⇦ Front

Removal

1. Remove instrument lower panel RH and lower glove box assembly. Refer to IP-24, "Removal and Installation".
2. Release the cup holder finisher clips using a suitable tool and remove.
3. Remove the shift selector finisher. Refer to IP-25, "Removal and Installation".
4. Remove center console screws, then lift center console rear base away from center console front base while disconnecting harness connectors.
5. Disconnect remaining harness connectors from center console front base and remove.

Installation

Installation is in the reverse order of removal.

UNIT DISASSEMBLY AND ASSEMBLY

INSTRUMENT LOWER PANEL RH AND GLOVE BOX

Exploded View

INFOID:0000000009478561

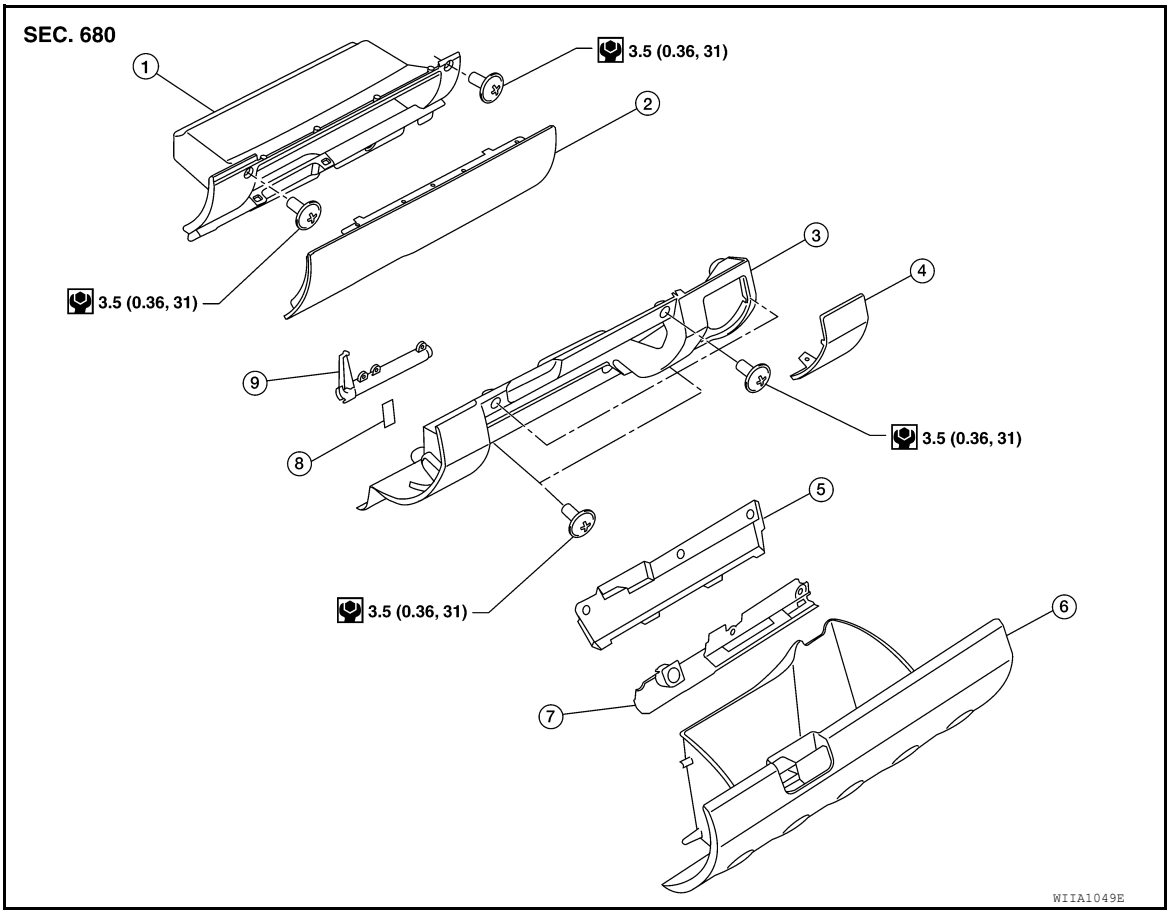

1.	Upper glove box	2.	Upper glove box lid	3.	Instrument lower panel RH
4.	Fuse block cover	5.	Lower glove box latch assembly cover	6.	Lower glove box
7.	Lower glove box latch assembly	8.	Damper hook	9.	Lower glove box damper

Disassembly and Assembly

INFOID:0000000009478562

INSTRUMENT LOWER PANEL RH AND GLOVE BOX

Disassembly

1. Remove fuse block cover.
2. Remove damper hook.
3. Remove lower glove box latch cover.
4. Remove lower glove box latch assembly.

Assembly

Assembly is in the reverse order of disassembly.

UPPER GLOVE BOX

Disassembly

1. Remove upper glove box lid screws.
2. Remove upper glove box lid.

Assembly

Assembly is in the reverse order of disassembly.

CENTER CONSOLE ASSEMBLY

Exploded View

INFOID:0000000009478563

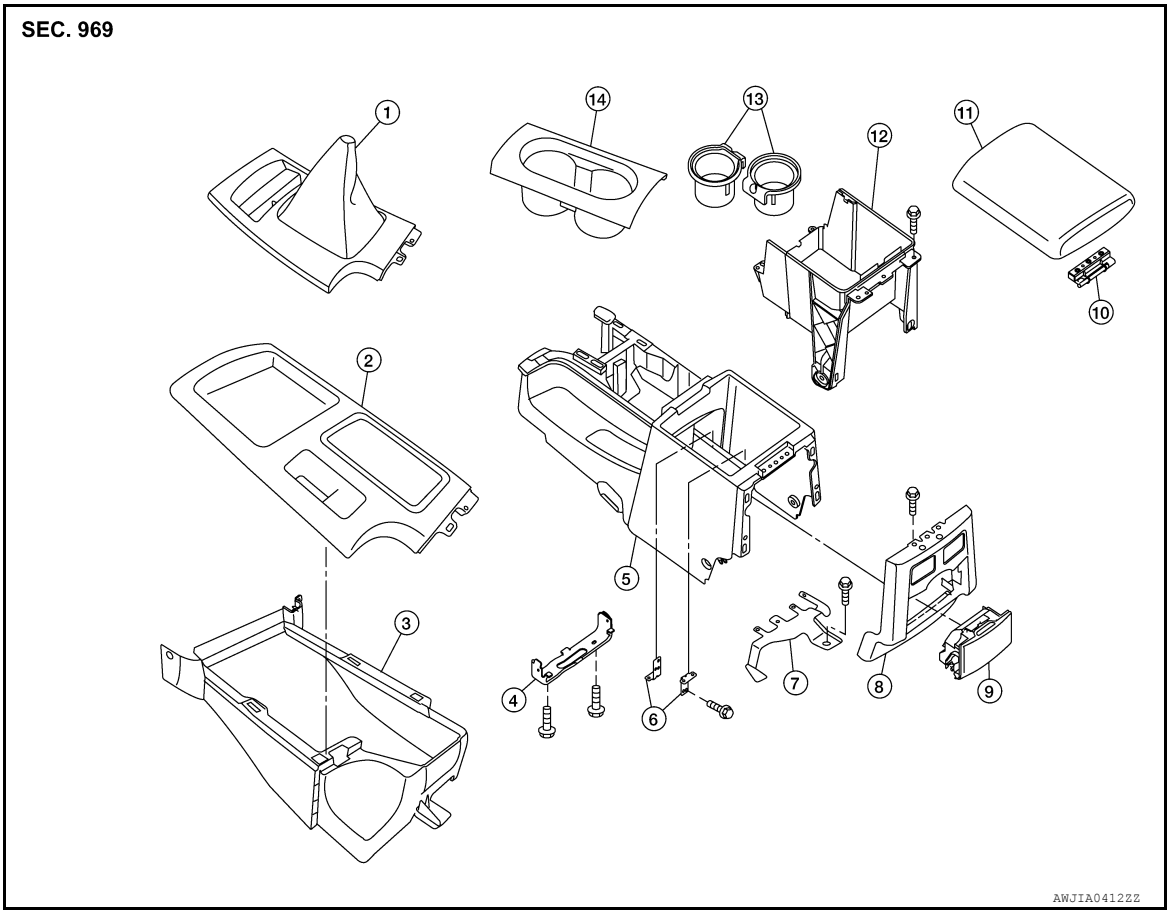

1.	Shift selector finisher (M/T)	2.	Shift selector finisher (A/T)	3.	Center console front base
4.	Bracket	5.	Center console rear base	6.	Bracket
7.	Wire harness bracket	8.	Rear finisher assembly	9.	Rear cup holder assembly
10.	Center console lid hinge	11.	Center console lid	12.	Center console bin
13.	Cup holder insert	14.	Cup holder finisher	A.	Bolt

Disassembly and Assembly

INFOID:0000000009478564

DISASSEMBLY

1. Remove center console. Refer to IP-15, "Removal and Installation".
2. Remove center console lid.
3. Remove hinge from center console lid.
4. Remove rear finisher assembly.
5. Remove rear cup holder assembly.
6. Remove brackets.
7. Disconnect harness connectors from center console.
8. Remove cup holder insert and cup holder finisher.
9. Remove center console bin.
10. Remove center console bracket.
11. Remove wire harness bracket.

ASSEMBLY

Assembly is in the reverse order of disassembly.