OPEL Meriva

Owner's Manual

Back to overview

OPEL Meriva

Operation, Safety, Maintenance

Back to overview

Data specific to your vehicle

Please enter your vehicle's data here so that it is readily accessible. Please refer to the sections "Servicing and maintenance" and "Technical data" and the identification plate.

Fuel

Designation	

Engine oil

Grade	
Viscosity	

Tyre pressure

	Tyre size	**Front**	**Rear**
Summer tyres			
Winter tyres			

Weights

	Gross vehicle weight rating	
–	**EC kerb weight**	
=	**Loading**	

Back to overview

Introduction

Your vehicle is an intelligent combination of forward-looking technology, impressive safety, environmental friendliness and economy.

It now lies with you to drive your vehicle safely and to see it performs perfectly. This Owner's Manual provides you with all the necessary information to that end.

Make sure your passengers are aware of the possible risk of accident and injury which may result from improper use of the vehicle.

You must always comply with the specific laws of the country that you are in. These laws may differ from the information in this Owner's Manual.

When this Manual refers to a workshop visit, we recommend your Opel Service Partner.

All Opel Service Partners provide first-class service at reasonable prices. Experienced mechanics trained by Opel work according to specific Opel instructions.

The Owner's Manual, infotainment system instructions and the vehicle Service and Warranty Booklet should always be kept ready to hand in the vehicle glove compartment.

Make use of the Owner's Manual

- The "In Brief" section will give you an initial overview.
- The table of contents at the beginning of the owner's manual and within the individual chapters will show you where everything is.
- Its index will help you find what you want.
- Yellow arrows in the illustrations serve as points of reference or indicate some action to be performed.
- Black arrows in the illustrations indicate a reaction or a second action to be performed.
- This Owner's Manual depicts left-hand drive vehicles. Right-hand drive vehicles are operated in the same way.
- The Owner's Manual uses the internal engine codes. The corresponding sales designations are found in the chapter "Technical data".
- Directional data, e.g. left or right, or front or back, in the descriptions always relate to the direction of travel.

Symbols

► Continue reading on next page.

✻ signifies equipment not fitted to all vehicles (model variants, engine options, models specific to one country, optional equipment, Genuine Opel Parts and Accessories).

Page references are indicated with ➪. ➪ means "see page".

⚠ Danger, ⚠Warning, Caution

⚠Danger
Text marked ⚠ **Danger** provides information on risk of endangering life. Failure to comply with the instructions could endanger life.

⚠Warning
Text marked ⚠**Warning** provides information on risk of accident or injury. Failure to comply with the instructions could lead to injury.

Caution
Text marked **Caution** provides information on possible damage to the vehicle Failure to comply with the instructions could lead to vehicle damage.

Safe driving!

Adam Opel GmbH

Back to overview

Contents

In Brief 2
Keys, doors, windows,
slide and tilt sunroof 26
Seats, Interior 44
Instruments, Controls 82
Lighting 102
Infotainment system 111
Climate control 114
Driving and operation 129
Self-help, vehicle care 165
Service and maintenance 199
Technical Data 218
Index 234

In Brief

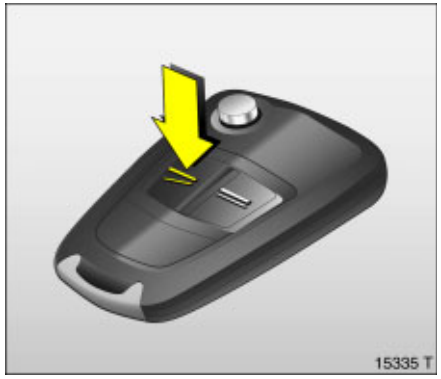

To unlock the vehicle: Press button ⊿

Open the door by pulling on the door handle. To open the tailgate, pull on the button in the handle recess and pull the tailgate upwards.

Door locks ➪ 26, key ➪ 26, remote control ➪ 28, central locking system ➪ 30, anti-theft locking system ✻➪ 31, tailgate ➪ 32, anti-theft alarm system ✻➪ 34.

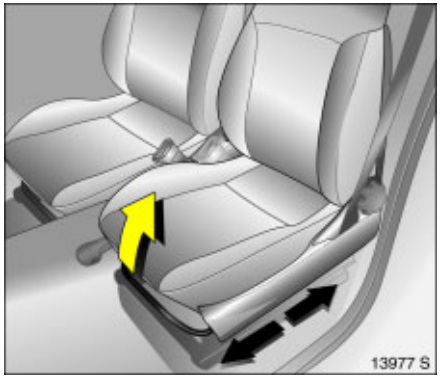

To adjust front seat leg room: Pull handle, slide seat, release handle

Seats ➪ 44, Seat position ➪ 45.

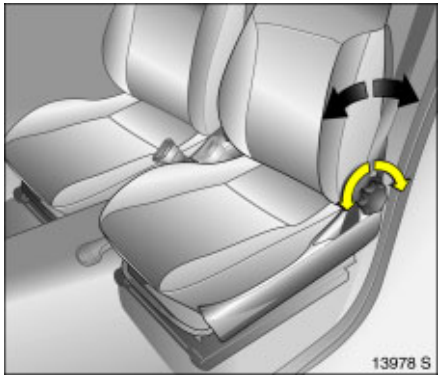

To adjust front seat backrests: Turn handwheel

Do not lean on seat backrest whilst adjusting it.

Seats ➪ 44, Seat position ➪ 45.

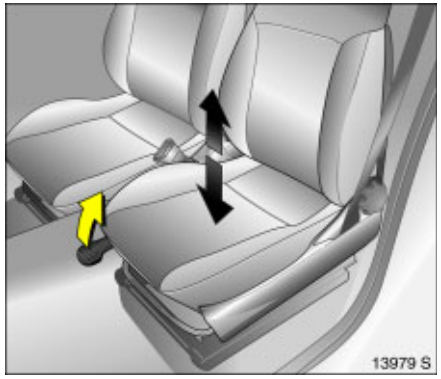

To adjust front seat height ❊: Pull lever

Lift lever and relieve some weight from seat to raise it or press down on seat with body weight to lower it.

Seats ➪ 44, Seat position ➪ 45.

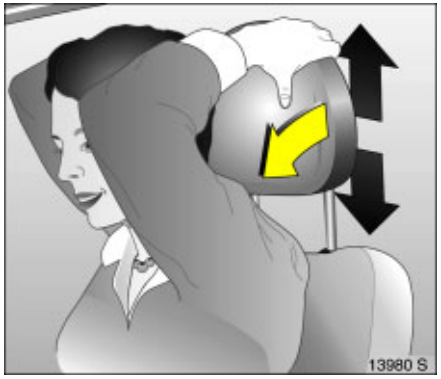

Head restraint height of front and rear outer seats: Tip head restraint forward to release, hold and adjust height, engage

Head restraints ➪ 46, Centre rear head restraint ➪ 47, Head restraint position ➪ 47, Head restraint removal ➪ 48.

Extend the seat belt and clip it into the buckle

The seat belt must not be twisted and must lie snugly against the body. The backrest must not be tilted back too far (maximum approx. 25□).

To release belt, press red button on belt buckle.

Three-point seat belt ➪ 59,
Airbag system ✻ ➪ 67, seat position ➪ 45.

To adjust interior mirror by swivelling

Swivel lever ✻ on underside of mirror housing to reduce dazzle.

Interior mirror ➪ 38, Automatic anti-dazzle interior mirror ✻ ➪ 39.

Use the knob to move the exterior mirrors in the appropriate direction

Mirror ➪ 36, Aspherical exterior mirrors ✻ ➪ 37, Swinging in exterior mirror ➪ 37.

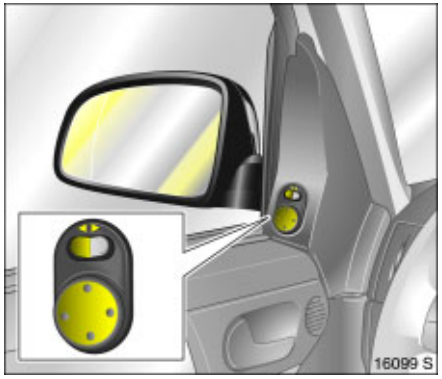

Adjust exterior mirrors electrically ✻

Select the mirror to be adjusted using the rocker switch and adjust using the four-way switch.

Mirror ➪ 36, Aspherical exterior mirrors ✻ ➪ 37, Swinging in exterior mirror ➪ 37, Heated exterior mirrors ✻ ➪ 13, ➪ 41.

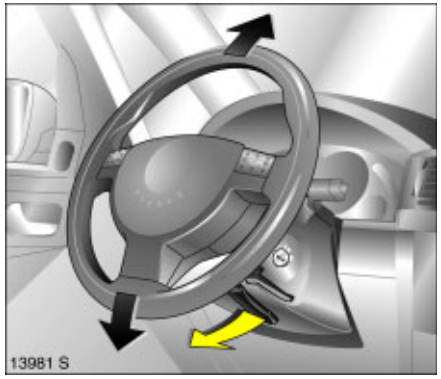

Steering wheel adjustment ✻: Swivel lever down, adjust height, swivel lever up, engage

Adjust steering wheel only when vehicle is stationary and steering wheel lock is released.

Airbag system ➪ 67, Steering wheel lock ➪ 15.

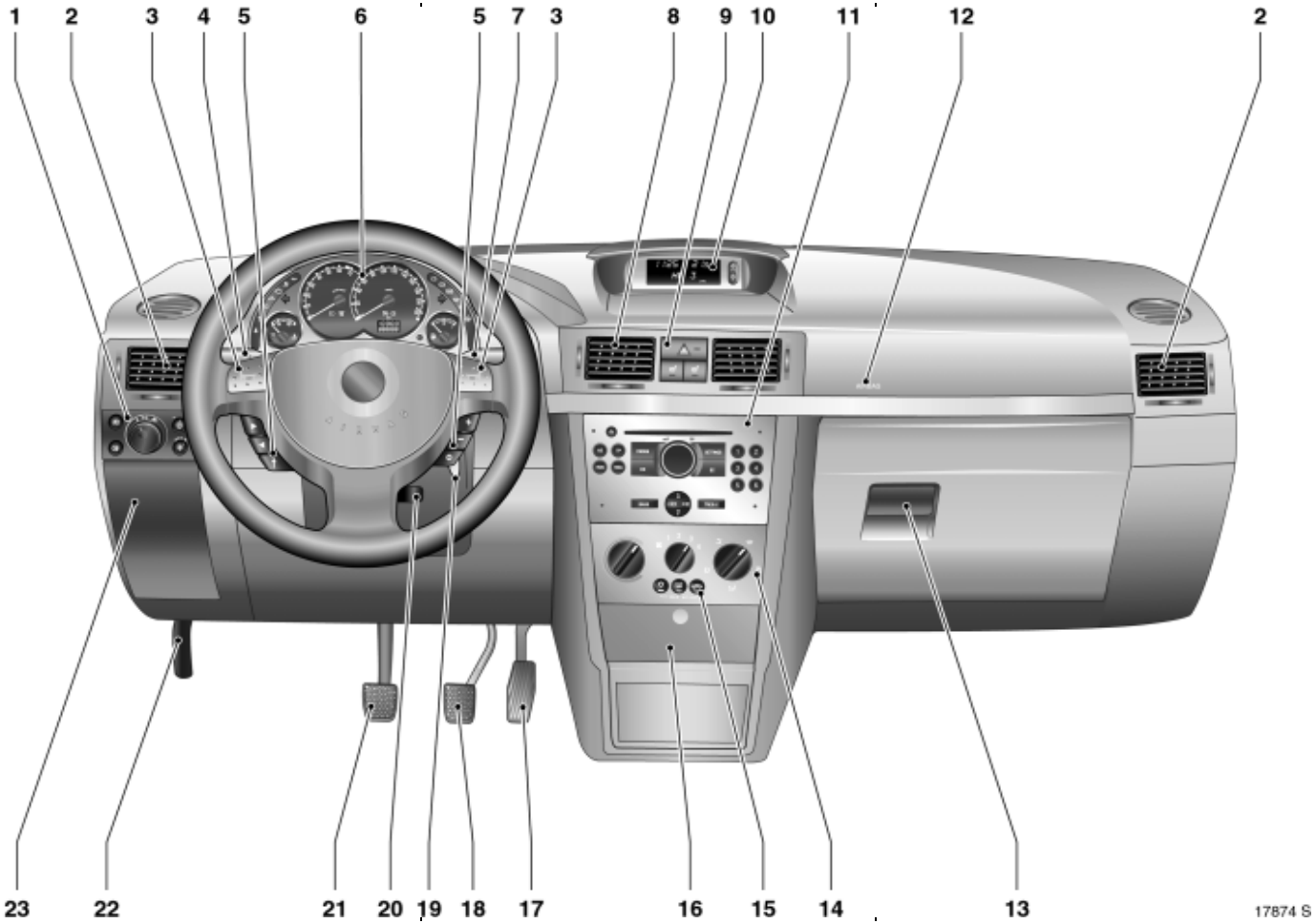
1
2
3
4
5
6
5
7
3
8
9
10
11
12
2
23
22
21
20
19
18
17
16
15
14
13
17874 S

1 Parking lamps, dipped beam ... ⇨ 102
Courtesy lamp ..... ⇨ 108
Instrument illumination ..... ⇨ 108
Rear fog lamp ..... ⇨ 104
Fog lamp ✻ ..... ⇨ 103
Headlamp range adjustment ✻ ⇨ 104

2 Side Air vents ..... ⇨ 115

3 Horn .....⇨ 12

4 Indicators, headlamp flasher
Dipped beam, main beam.....⇨ 11
Ambient lighting ✻..... ⇨ 107
Cruise control ✻..... ⇨ 148

5 Steering wheel remote control ✻..... ⇨ 111

6 Instruments ..... ⇨ 82

7 Windscreen wipers and windscreen washer system, headlamp washer system ✻ and rear window washer system ✻ .....⇨ 12, ⇨ 100

8 Centre air vents ..... ⇨ 115

9 Hazard warning lamps ... ⇨ 12, ⇨ 104
LED for anti-theft alarm system ✻ .....⇨ 34
Heated seats ✻ ..... ⇨ 46

10 Central information display for time, date, outside temperature, infotainment system ✻ ..... ⇨ 90

11 Infotainment system ✻ ..... ⇨ 111

12 Front passenger airbag ✻ ..... ⇨ 67

13 Glove compartment ..... ⇨ 80

14 Climate control ..... ⇨ 114

15 Air conditioning system ✻ ..... ⇨ 114
Heated rear window .....⇨ 13, ⇨ 41
Recirculation system ✻..... ⇨ 119

16 Ashtray ..... ⇨ 79
Accessory socket and cigarette lighter ..... ⇨ 78

17 Accelerator pedal ..... ⇨ 135, ⇨ 137

18 Brake pedal ..... ⇨ 135, ⇨ 151

19 Ignition switch with steering wheel lock ..... ⇨ 15

20 Steering wheel adjustment ✻ ..... ⇨ 5

21 Clutch pedal ✻ ..... ⇨ 135

22 Bonnet release lever ..... ⇨ 165

23 Fuse box ..... ⇨ 182

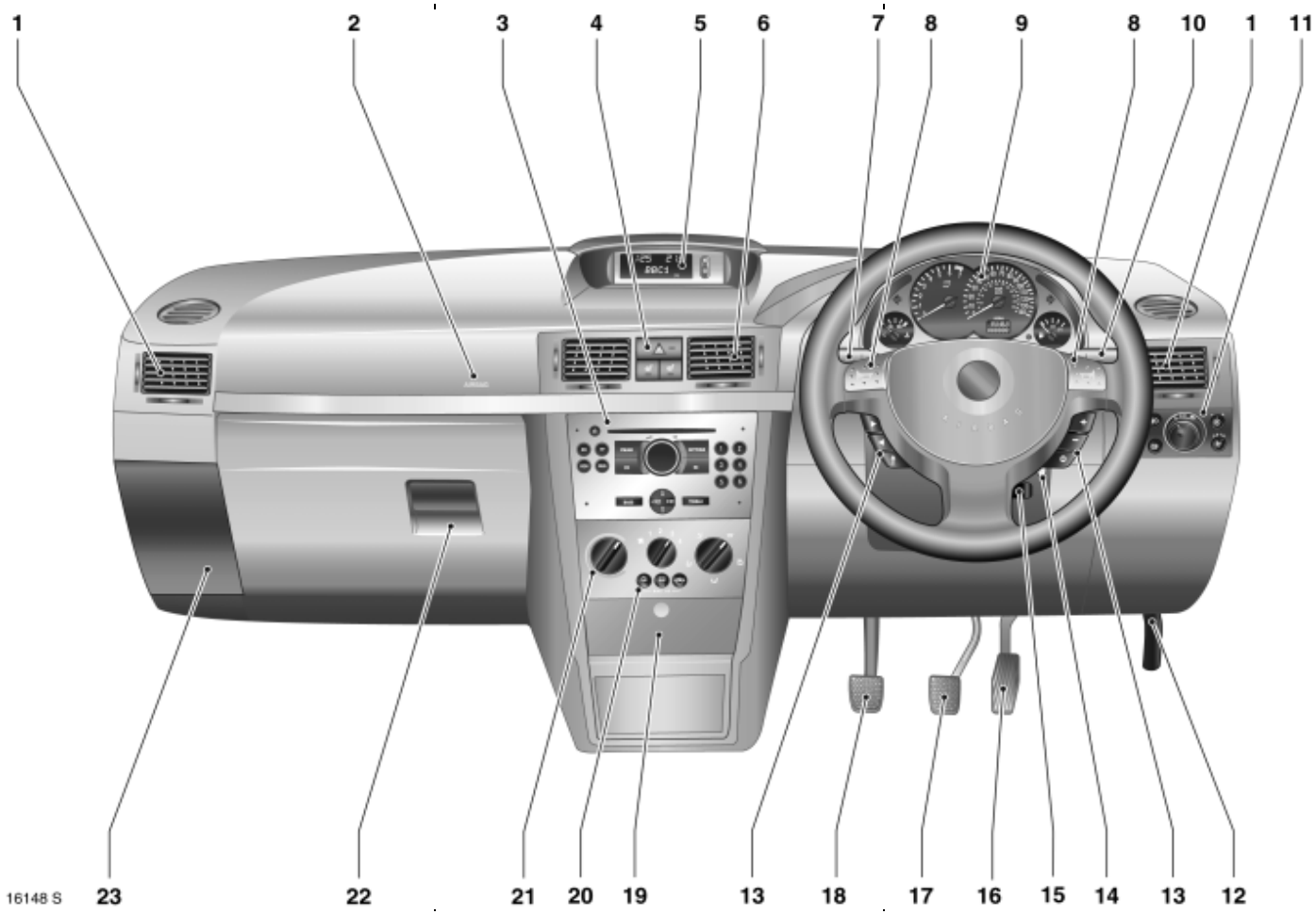
1
2
3
4
5
6
7
8
9
8
10
1
11
16148 S
23
22
21
20
19
13
18
17
16
15
14
13
12

1 Side air vents ..... ⇨ 115

2 Front passenger airbag ✻ ..... ⇨ 67

3 Infotainment system ✻ ..... ⇨ 111

4 Hazard warning lamps .... ⇨ 12, ⇨ 104
LED for
anti-theft alarm system ✻ .....⇨ 34
Heated seats ✻ ..... ⇨ 46

5 Information display
for time, date,
outside temperature,
infotainment system ✻ ..... ⇨ 90

6 Centre air vents ..... ⇨ 115

7 Indicators, headlamp flasher
dipped beam, main beam .....⇨ 11
ambient lighting ✻..... ⇨ 107
cruise control ✻..... ⇨ 148

8 Horn .....⇨ 12

9 Instruments ..... ⇨ 82

10 Windscreen wipers,
windscreen washer system,
headlamp washer system ✻
and rear window
washer system ✻ .....⇨ 12, ⇨ 100

11 Parking lamps, dipped beam ....⇨ 102
Courtesy lamp .....⇨ 108
Instrument illumination .....⇨ 108
Fog tail lamp .....⇨ 104
Fog lamp ✻ .....⇨ 103
Headlamp range adjustment ✻ .⇨ 104

12 Bonnet release lever ..... ⇨ 165

13 Steering wheel remote
control ✻ .....⇨ 111

14 Ignition switch with steering
wheel lock ..... ⇨ 15

15 Steering wheel adjustment ✻ ..... ⇨ 5

16 Accelerator pedal ..... ⇨ 135, ⇨ 137

17 Brake pedal ..... ⇨ 135, ⇨ 151

18 Clutch pedal ✻ ..... ⇨ 135

19 Ashtray ..... ⇨ 79
Accessory socket and
cigarette lighter ..... ⇨ 78

20 Air conditioning system ✻ ..... ⇨ 114
Heated rear window .....⇨ 13, ⇨ 41
Recirculation system ✻..... ⇨ 119

21 Climate control ..... ⇨ 114

22 Glove compartment ..... ⇨ 80

23 Fuse box ..... ⇨ 182

Control indicators

Seat belt ✻,
➪ 82.

Adaptive Forward Lighting (AFL) ✻, fault,
➪ 82, ➪ 106.

Fog lamps ✻,
➪ 83, ➪ 103.

Engine electronics, immobiliser, Easytronic ✻, Fault,
➪ 83, ➪ 27, ➪ 143.

Exhaust gases ✻,
➪ 83, ➪ 143.

Airbag systems ✻, Belt tensioners,
➪ 61, ➪ 72.

Engine oil pressure,
➪ 84.

Turn signal lamps,
➪ 11, ➪ 84.

Main beam,
➪ 11, ➪ 84.

Preheating system ✻, Diesel particle filter ✻,
➪ 86.

Easytronic ✻, starting the engine ✻,
➪ 130.

Easytronic ✻, Winter programme,
➪ 132.

Cruise control ✻,
➪ 148.

Fog tail lamp,
➪ 85, ➪ 104.

Alternator,
➪ 85.

Brake system, clutch system ✻,
➪ 85.

Anti-lock Braking System ✻,
➪ 152.

Engine oil level ✻,
➪ 85.

EPS **Electric power steering ✻,**
➪ 86.

Electronic Stability Program (ESP®Plus) ✻,
➪ **146.**

Fuel level,
➪ 86, ➪ 140.

Seat occupancy recognition ✻,
➪ 72, ➪ 73.

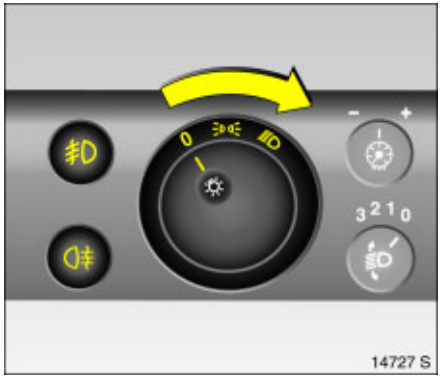

Exterior lights

Rotate

0	=	Off
	=	Parking lamps
	=	Dipped or main beam

Press

	=	Fog lamps ❄
	=	Fog tail lamp

Lighting ➪ 102, headlamp warning device ➪ 17.

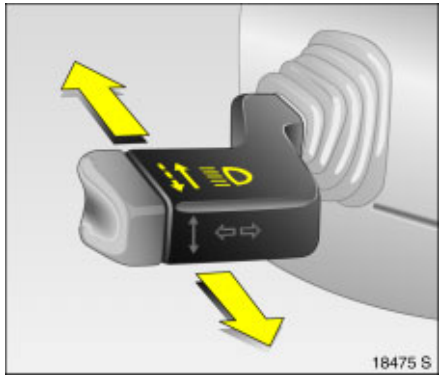

Headlamp flash, main beam and dipped beam

Headlamp flash	=	Pull stalk towards steering wheel
Main beam	=	Push stalk forwards
Dipped beam	=	Push stalk forwards again

Main beam, headlamp flash ➪ 103.

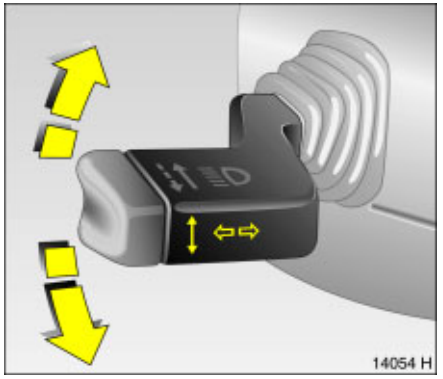

Turn signals

Right	=	Lever upwards
Left	=	Lever downwards

Turn signal lamps ➪ 103.

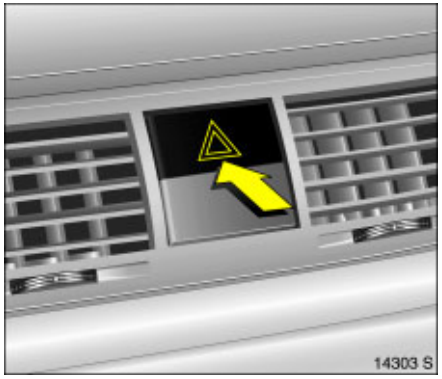

Hazard warning flashers

Operated with the button.

Hazard warning lamps ⇨ 104.

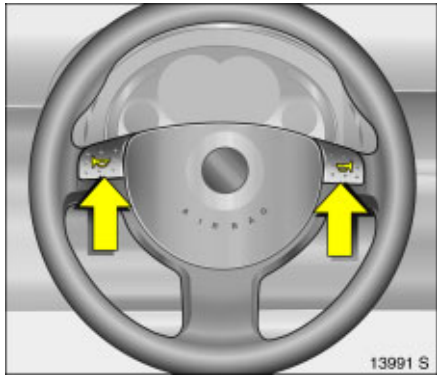

Horn: Press

Airbag system ✻ ⇨ 67, Steering wheel remote control ✻ ⇨ 111.

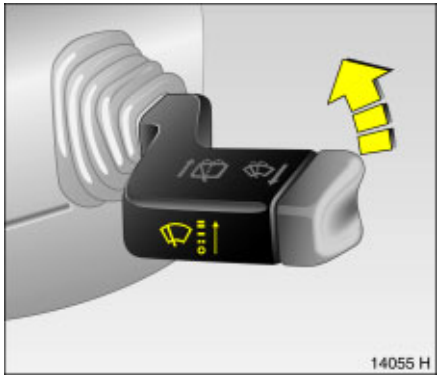

Windscreen wipers

═	=	Fast
—	=	Slow
- -	=	Timed interval wipe
O	=	Off

Windscreen wipers ⇨ 100 adjustable intermittent setting ✻ ⇨ 100, further information ⇨ 198, ⇨ 215.

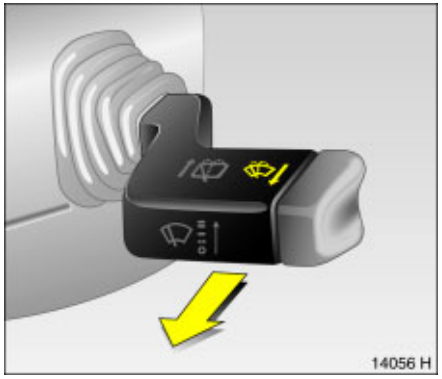

Operating windscreen and headlamp washer systems ✻: Pull stalk towards steering wheel

The wipers will swipe for a few strokes.

The headlamp washer system ✻ can be operated when the lights are on.

Windscreen washer system and headlamp washer system ✻ ⇨ 101, Further information ⇨ 198, ⇨ 215.

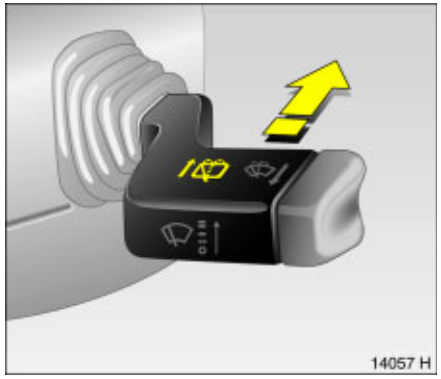

Rear window wiper and washer system

Wiper on	=	Push stalk forwards
Wiper off	=	Pull stalk towards steering wheel
Washing	=	Push lever forward and hold

Rear window wash and wipe system ⇨ 101, Wiper blades ⇨ 215, Car care ⇨ 198.

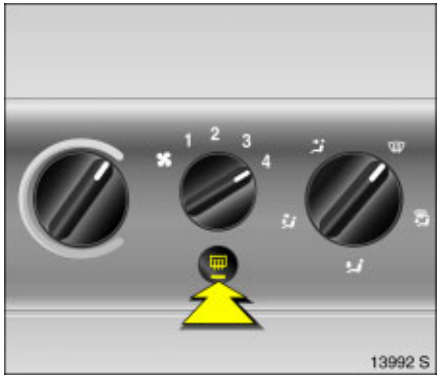

Heated rear window, heated exterior mirrors ✻

Operated with the button.

Climate control ⇨ 114, Heated rear window ⇨ 41.

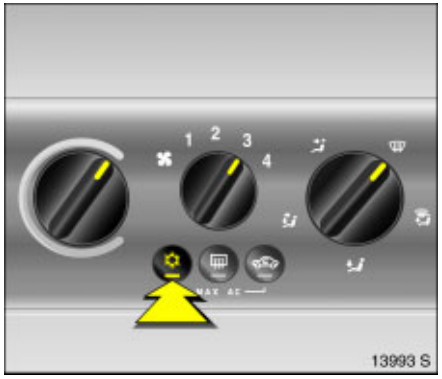

To clear fogged or icy windows

Turn rotary switch for temperature and air volume, for air flow also press ,for air conditioning system ❇: button , climate control ❇: button .

Climate control ➪ 114, Air conditioning system ❇ ➪ 119, Climate control system ❇ ➪ 122.

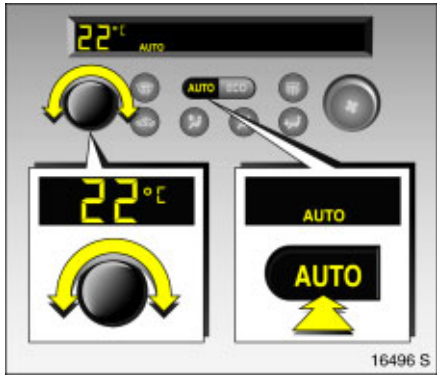

To set automatic mode of climate control system ❇

Press **AUTO** button, select temperature with rotary knob, open air vents.

Climate control system ❇ ➪ 122.

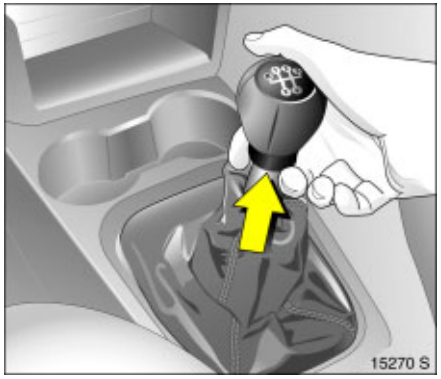

Manual transmission

Reverse gear: With vehicle stationary, wait 3 seconds after depressing the clutch, then lift the ring below the gear knob and engage gear.

If the gear does not engage, set the lever in neutral, release the clutch pedal and depress again; then repeat gear selection.

Manual transmission ➪ 14.

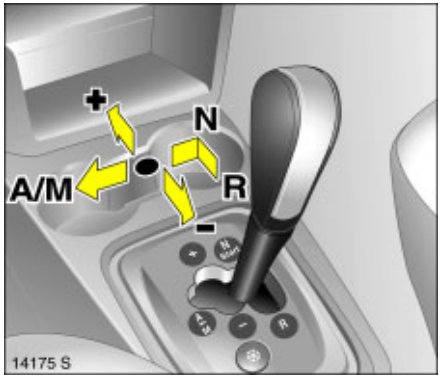

Automated manual transmission ✻

N	=	Idle/start position
●	=	Driving position
+	=	Higher gear
-	=	Lower gear
A/M	=	Switch between Automatic and Manual mode
R	=	Reverse gear (with selector lever lock)

To move the selector lever from **N** to **R** press the button on the lever.

Only start in **N** with foot brake applied.

Automated manual transmission ✻ ⇨ 129.

Before starting off, check

- Tyre pressure and tyre condition ⇨ 155, ⇨ 228.
- Engine oil level and fluid levels ⇨ 209 to ⇨ 216.
- All windows, mirrors, exterior lighting and number plates are free from dirt, snow and ice and operational.
- Seats, seat belts and mirrors are correctly adjusted. ⇨ 44, ⇨ 59, ⇨ 36.
- Check brake function at low speed, particularly if the brakes are wet.

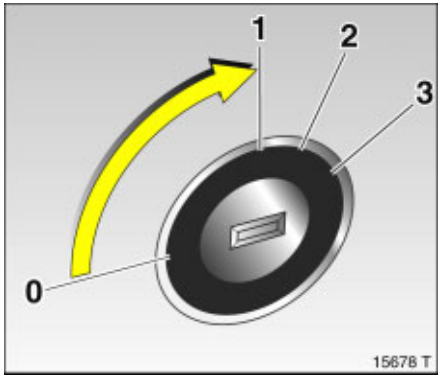

Steering wheel lock and ignition

Turn key to position 1. Move the steering wheel slightly to release the steering wheel lock.

0	=	Ignition off
1	=	Steering free, ignition off
2	=	Ignition on, with diesel engine: pre-heating
3	=	Starting

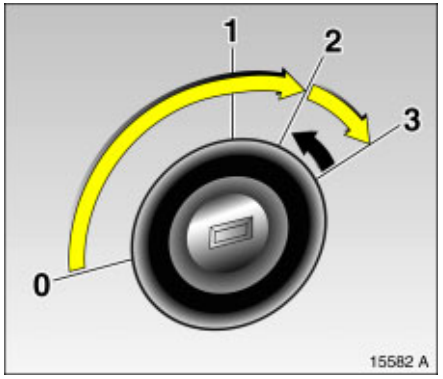

Starting the engine

Depress clutch and brake, manual transmission automated ✻ in **N**, do not press the accelerator, in diesel engine vehicles turn the key to positing 2 until the warning lamp ⚷ goes out, turn key to position 3; let go of the key when the engine is running.

Before restarting or switching off the engine, turn key back to **0**.

To switch on the ignition, only turn the key to 2.

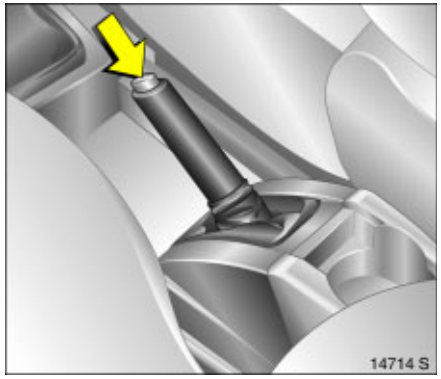

Releasing the hand brake: Raise lever slightly, Press release button, Lower lever fully

Hand brake ⇨ 153.

Parking the vehicle

- Always apply the handbrake without pressing the release button. On an incline, apply as tight as possible. To reduce activation force, depress foot brake at the same time.
- Switch off engine and ignition. Turn the ignition key to position 0 and pull it out. Turn the steering wheel until it is clear that the steering lock has engaged (anti-theft protection).

  On vehicles with manual transmission automated ✻, control indicator ⓘ flashes for a few seconds after the ignition is switched off if the hand brake has not been applied.
- If the vehicle is on the flat or on an incline, engage first gear before switching off the ignition. On an uphill slope, also turn the front wheels out from the kerb.

  If the vehicle is facing downhill, engage reverse gear before switching off the ignition. Also turn the front wheels into the kerb.
- Lock the vehicle by pressing button ═ on the remote key fob.

  To activate the anti-theft locking system ✻ and anti-theft alarm system ✻, press button ═ twice.

Advice when parking

- Do not park the vehicle on flammable ground as combustion could occur due to the high exhaust temperatures.
- Close window, sliding roof ✻ and tilting roof ✻.
- The engine cooling fans may run after the engine has been switched off, ⇨ 209.
- After running at high engine speeds or with high engine loads, operate the engine briefly at a low load or run in neutral for approx. 30 seconds before switching off in order to protect the turbocharger ✻.

Remote control ⇨ 28, central locking system ⇨ 30, anti-theft warning system ✻ ⇨ 34, parking vehicle for longer periods ⇨ 217.

Interesting functions

Flexible Seat System (FlexSpace)

The back seat of your vehicle has three seats or, with the centre seat lowered, two seats with maximum seating space. The outer seats can be lowered to obtain a level loading surface.

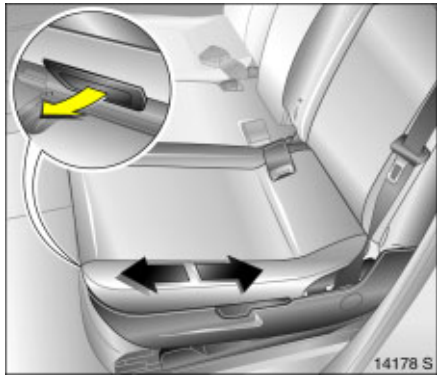

Sliding outboard rear seats front-rear

- Pull handle under seat.
- Slide seat.
- Release handle and allow seat to engage in position.

When pushing the seats back, to prevent damage make sure the backrests are not in their furthest back position.

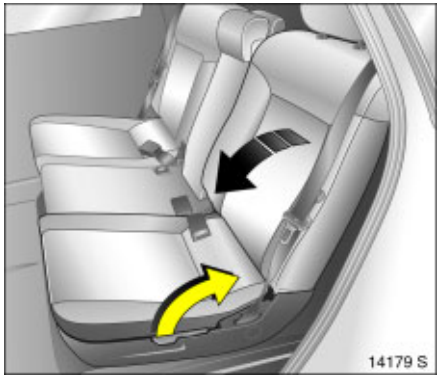

Adjust or fold backrest of rear outboard seats

- Pull handle on outboard side of seat.
- Guide backrest into the relevant position.
- Release handle and allow seat to audibly engage in position.

The backrest can engage in several positions. In addition, the backrest can be folded all the way down to the seat when extending the luggage compartment.

⚠Warning
To prevent injuries, always hold back seat backrest firmly and guide downward when folding.

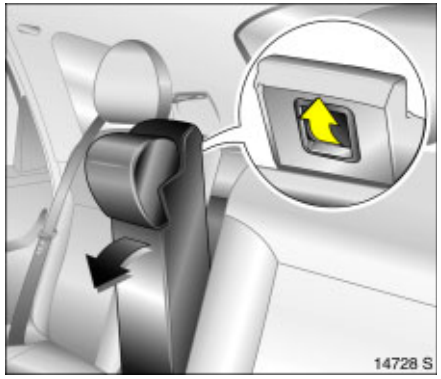

Lower centre seat

- House centre seat belt in the holder in the roof.
- Insert seat belts into recesses in seat cushion.
- Slide centre seat head rest all the way down.
- Pull release handle at rear of centre backrest. Tilt backrest forward and engage.

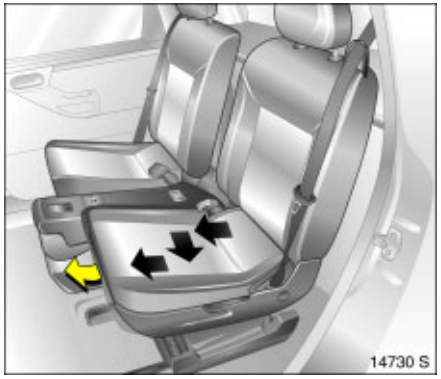

Variant 1 with three rear seats

- Adjust backrest to centre position.
- Pull handle beneath seat. Slide seat all the way forward, then outward toward the door and then further forward to the desired position.
- Release handle and allow seat to engage in position.
- Raise centre seat.

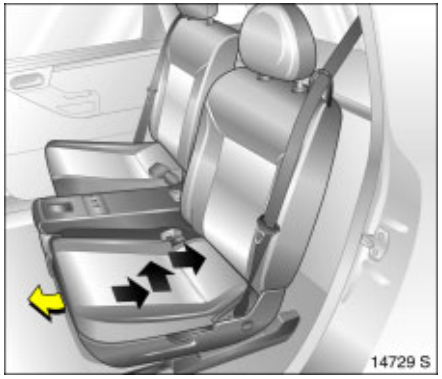

Variant 2 with two rear seats, with maximum seating space

- Lower centre seat.
- Adjust backrest to centre position.
- Pull handle beneath seat. Slide seat all the way back, then toward the centre of the vehicle and then further rearward to the desired position.
- Release handle and allow seat to engage in position.

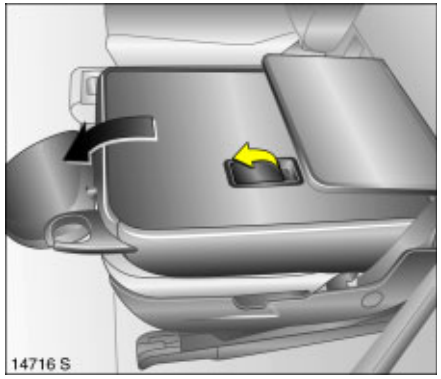

Lower outboard seats

- Pull seat belt from belt guide at backrest.
- Fold down outboard rear seat backrests.
- To achieve a level loading surface, pull release handle on back of backrest and push seat down until it latches into position.

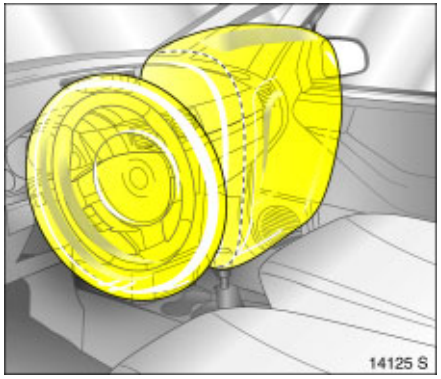

Airbag system

The airbag system consists of several internal systems.

Front airbag system

The front airbag system will be triggered in the event of a serious accident involving a frontal impact and forms safety cushions for the driver and front passenger. The forward movement of the driver and front passenger is checked and the risk of injuries to the upper body and head thereby substantially reduced.

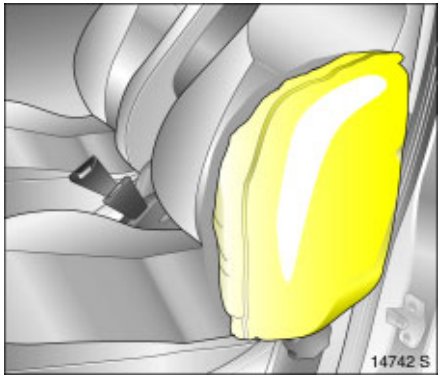

Side airbag system ✻
The side airbag is triggered in the event of a side-on collision to form a safety cushion for the driver or front passenger in the respective door area. This substantially reduces the risk of injury to the upper body and pelvis.

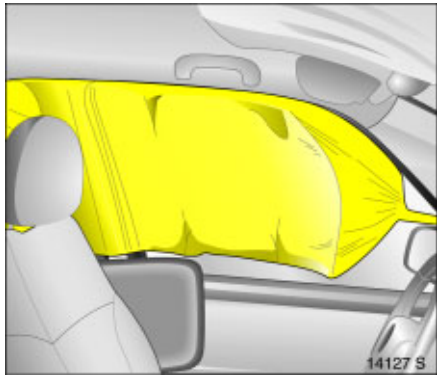

Curtain airbag system ✻
In the event of a side-on collision, the curtain airbag system triggers and provides a safety barrier in the head area of the vehicle. This considerably reduces the risk of injury to the head in the event of a side-on collision.

Airbag System ✻ ➪ 67.

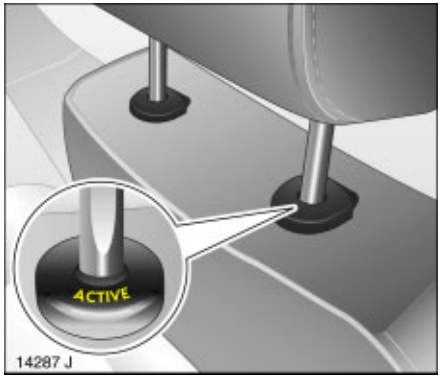

Active head restraints ✻ on front seats

In the event of a rear-end impact, the active head restraints tilt forwards slightly. The head is more effectively supported by the head restraint and the risk of whiplash injury is reduced.

Active head restraints can be recognised by the word **ACTIVE**.

Head restraints ➪ 46.

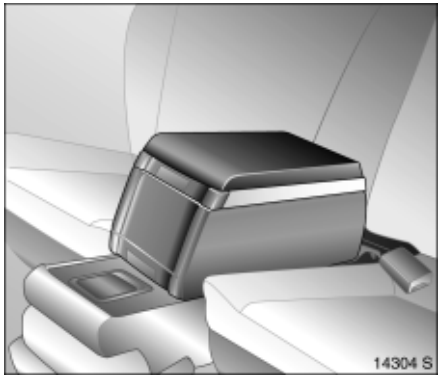

Travel Assistant ✻

The Travel Assistant Contains

- Armrest.
- Tray.
- Drink holders.

The Travel Assistant is mounted on the lowered centre seat.

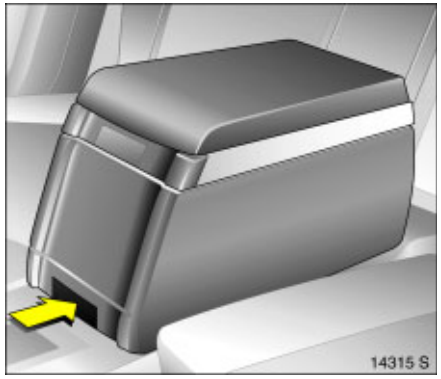

Dismantling the Travel Assistant

- Press lower button on the Travel Assistant.
- Pull Travel Assistant upwards out of recesses.
- There is a carrying handle on the back to facilitate transport.

Operating menus via the information display ✻

Menu options are selected using menus and using the buttons/four-way button or the multifunction button of the Infotainment system ✻ or the buttons ✻ on the steering wheel. The respective menu options are shown on the display.

Selection using four-way button: press four-way button at top, bottom, left or right.

Selection using multifunction button ✻: rotate and press multifunction button.

To exit a menu, turn the multifunction button left or right to **Return** or **Main** and select.

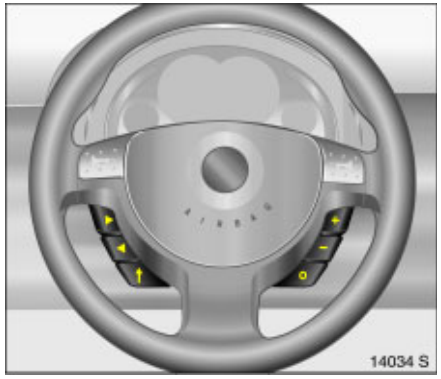

To select with steering wheel buttons ✻ Select menu options via the menus and the buttons.

Information display ➪ 90.

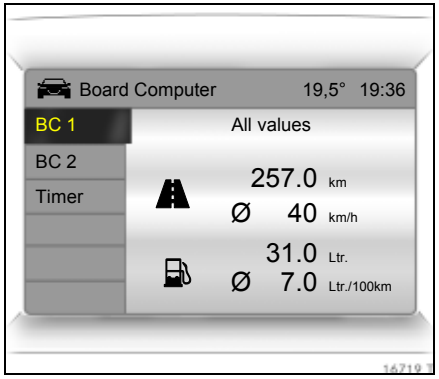

Trip computer ✻

Functions:

- Range
- Instantaneous consumption
- Distance travelled
- Average speed
- Effective consumption
- Average consumption
- Stop watch

Trip computer ➪ 97.

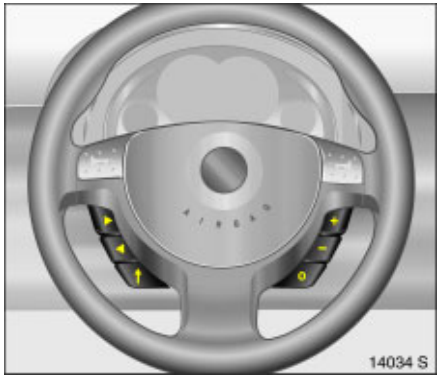

Steering wheel remote control ✻

The functions of the infotainment system and the information display can be operated with the remote control on the steering wheel.

Steering wheel remote control ✻ ⇨ 111, Infotainment system ⇨ 111.

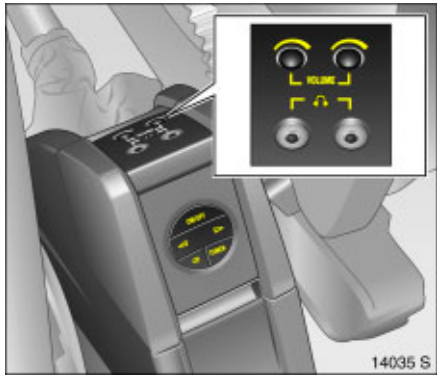

Rear seat audio system ✻

Twin Audio allows rear seat occupants the choice between the audio source played on the Infotainment system or the alternative audio source.

Rear seat audio system ✻ ⇨ 112.

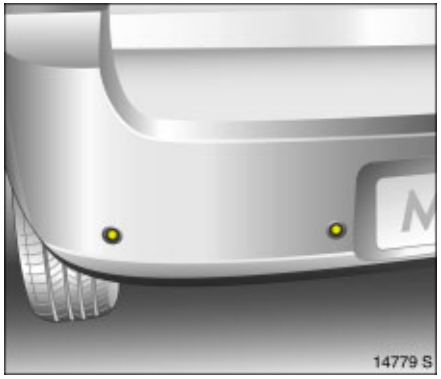

Ultrasonic parking sensors ✻

When reverse gear is selected, the park pilot switches itself on automatically.

An acoustic warning sounds when the vehicle approaches an obstacle behind.

Ultrasonic parking sensors ✻ ⇨ 150.

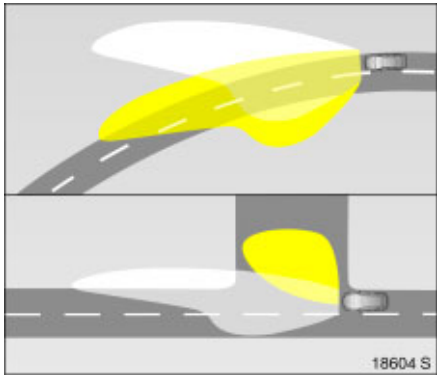

Adaptive Headlight (AFL) ✻

The system provides better illumination of the road on corners and curves.

Curve lighting
The light beam pivots based on steering wheel position and speed (from approx. 10 km/h).

The headlamps shine at an angle of up to 15□ to the right or left of the direction of travel.

Cornering light
An additional lamp comes on at certain steering wheel settings (after rotation of approx. 90□), turn signal settings and speeds (up to approx. 40 km/h).

The lamp beam projects at a 90□ angle to the left or right of the vehicle up to a distance of approx. 30 metres.

Reversing function
Turning the lights on, selecting reverse gear and activating the turn signal activates the cornering light for the relevant side. When the turn signal is switched off, the cornering light continues to illuminate for 15 seconds.

Adaptive forward lighting ✻ ⇨ 106.

Diesel particle filter ✻

The diesel particle filter system filters harmful soot particles out of the exhaust gases. The system includes a self-cleaning function that run automatically during driving. The filter is cleaned by burning off the soot particles at high temperature. This process takes place automatically under set driving conditions and may take up to 25 minutes. Fuel consumption may be higher during this period. The emission of smells and smoke during this process is normal.

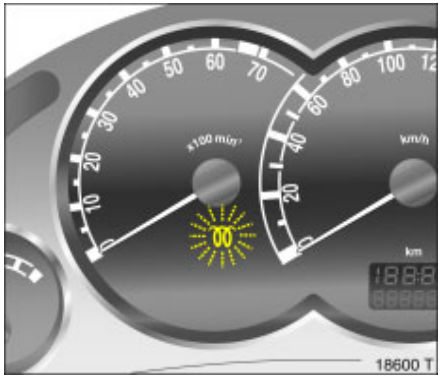

Under certain driving conditions, e.g. short journeys, the system may not clean itself automatically.

If the filter requires cleaning and previous driving conditions did not enable automatic cleaning, control indicator ➿ flashes.

Further instructions ⇨ 144.

Keys, doors, windows, slide and tilt sunroof

Replacement keys 26
Key with retractable key blade ✻ 26
Car Pass..... 26
Electronic immobiliser..... 27
Radio remote control 28
Central locking system 30
Malfunction in remote control 32
Malfunction in central locking system 32
Tailgate 32
Anti-theft alarm system ✻ 34
Child safety locks..... 36
Exterior mirrors..... 36
Interior mirror 38
Manual window operation..... 39
Electric windows ✻..... 39
Sun roof and tilting roof ✻..... 42

Replacement keys

The key number is specified in the Car Pass ✻.

The key is part of the electronic immobiliser.

Locks ⇨ 198.

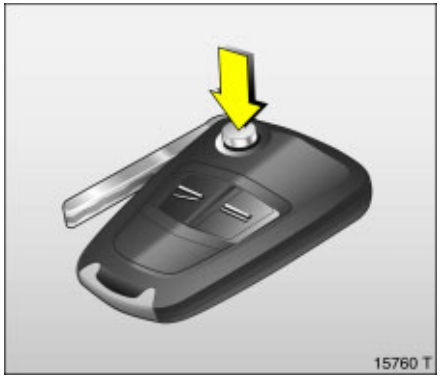

Key with retractable key blade ✻

Press button to extend. To retract, press button and audibly engage key blade.

Car Pass

The Car Pass contains safety-related vehicle data and should therefore be kept in a safe place.

When the car is taken to a workshop, the Car Pass data is needed in order to perform certain operations.

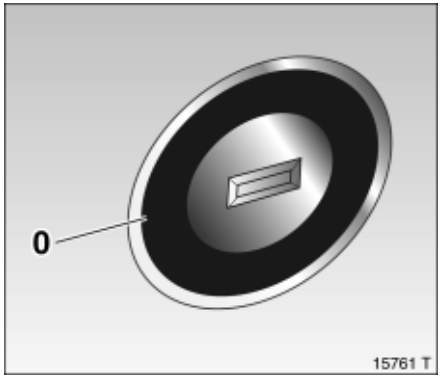

Electronic immobiliser

The system checks whether the vehicle is allowed to start with the key used. Once the transponder in the key is recognised, the vehicle can be started.

The electronic immobiliser activates automatically when the key is removed from the ignition switch.

Control indicator for immobilizer
Control indicator illuminates briefly when the ignition is switched on.

If the control indicator flashes when the ignition is on, there is a fault in the system; the engine cannot be started. Switch off the ignition and then repeat the start attempt.

If the control indicator continues to flash, please try to start the engine using the second key and contact a workshop.

If control indicator illuminates after the engine has started, there is a fault in the engine electronics or transmission electronics ✻ ➪ 83, ➪ 133, ➪ 143 or there is water in the diesel fuel filter ✻ ➪ 212.

Note
The immobiliser does not lock the doors. Therefore, always lock the vehicle before leaving it unattended and enable the anti-theft alarm system ✻ ➪ 34.

Radio remote control

Depending on equipment level, the vehicle comes equipped with one of the remote controls depicted on this page.

The remote control is integrated in the key.

Used to operate:
- Central locking system,
- Mechanical anti-theft locking system ✻,
- Anti-theft alarm system ✻.

In vehicles with electric windows in all doors ✻, the radio remote control can be used to closed the windows.

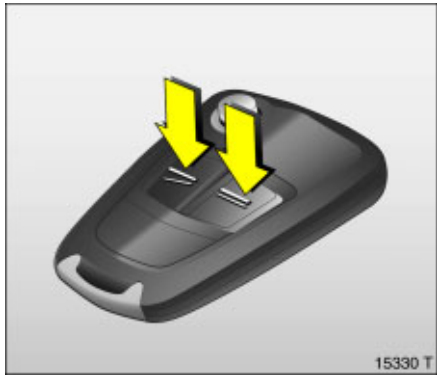

The remote control has a range of approx. 5 metres. This range can be affected by outside influences. Aim the remote control at the vehicle to operate. The hazard warning lamps flash to confirm remote control operation.

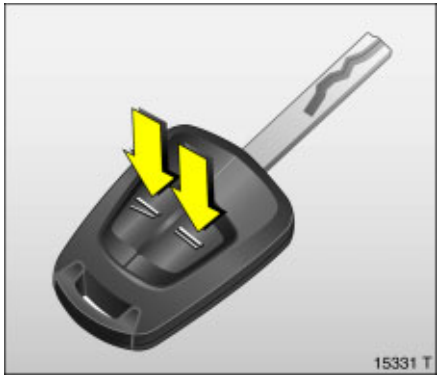

Handle the remote control with care, protect it from moisture and high temperatures and avoid unnecessary operation.

Fault
If the central locking system cannot be operated with the remote control, it may be due to the following:

- Range exceeded.
- Remote control battery voltage too low. Change battery.
- Operating the remote control several times in quick succession outside the range of the vehicle can result in the remote control no longer being recognised so that it has to be re-synchronised.
- If the central locking system is overloaded as a result of repeated operation at short intervals. The power supply is cut off for a brief period.
- Interference from higher-power radio waves from other sources.

Opening the vehicle ⇨ 32.

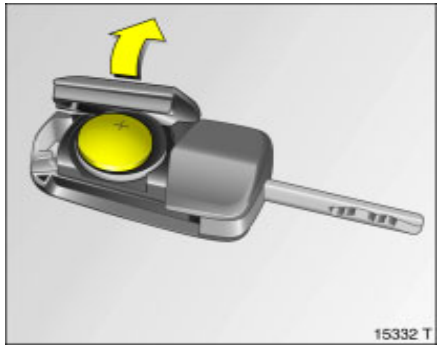

Remote control battery replacement
Replace the battery as soon as the range of the remote control begins to shrink.

Batteries do not belong in household waste. They must be disposed of at an appropriate recycling collection point.

Key with retractable key blade, see Fig. 15330 T on previous page.

Extend the key ⇨ 26. Open the remote control. Replace the battery (battery type CR 20 32), noting installation position. Close the remote control and synchronise.

Key with fixed key bit, see Fig. 15331 T on previous page.

Have the battery changed in a workshop.

Synchronise remote control
After changing the battery, unlock the door using the key in the lock. The radio remote control is synchronised by inserting the key in the ignition lock.

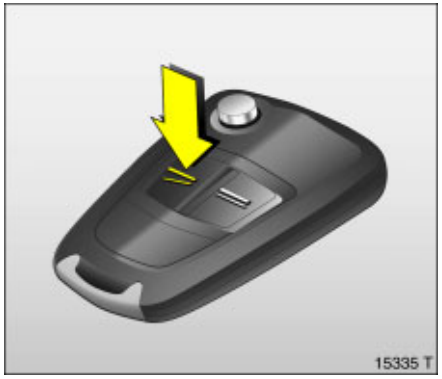

Central locking system

Unlock and lock doors, tailgate and fuel filler flap.

To unlock
Press button ⊼ on remote control

– or from the inside –

Release lock button on driver's door.

To open the door, pull the handle. Open the luggage compartment by pulling the button in the handle recess.

When the mechanical anti-theft locking system ✻ is enabled, the doors cannot be unlocked by pulling up the lock buttons.

Country-specific version ✻: pressing once unlocks the driver's door, and pressing twice unlocks the entire vehicle.

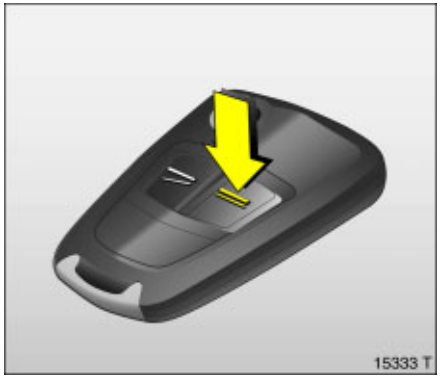

To lock
Close doors, luggage compartment and tank flap.

Press button ⊼ of the radio remote control

– or from the inside –

Press lock button on driver's door when the doors are closed.

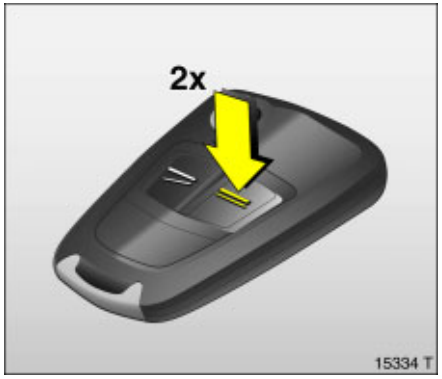

Mechanical anti-theft locking system ✻

⚠Warning
Do not use the system if there are people in the vehicle! The doors cannot be unlocked from the inside.

All doors must be closed.

If the ignition was on, the driver's door must be opened and closed once so that the vehicle can be secured.

All doors are secured against opening.

Within 10 seconds of locking, press the ⚌ button on the remote control again.

The mechanical anti-theft locking system is switched off when the vehicle is unlocked.

Note

- To prevent the driver from being inadvertently locked out, the button on the driver's door cannot be depressed when the door is open.
- If the driver's door is not closed properly, the central locking system will unlock again immediately after locking.
- The doors lock again automatically a short time after unlocking the vehicle using the remote control if no door is opened in the meantime.
- To lock the doors from inside (e.g. to prevent unwanted entry from outside), push down lock button on driver's door.
- Locked doors unlock automatically if an accident of a certain severity occurs (to permit outside assistance) – Prerequisite: Ignition must not be switched off.

Fault

If the central locking cannot be operated, this can be for one of the following reasons:

- If the central locking system is overloaded as a result of repeated operation at short intervals. The power supply is cut off for a brief period.
- Faulty fuse in fuse box ⇨ 182.

To eliminate the cause of the fault, contact a workshop.

Opening driver's door with key.

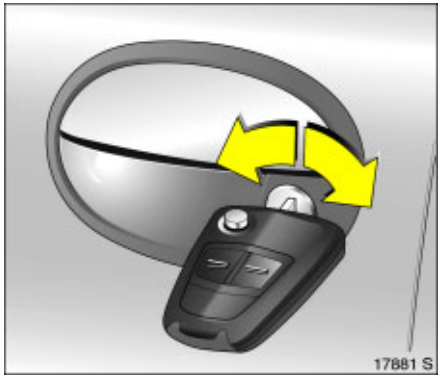

Malfunction in remote control

To unlock
Turn key anticlockwise in driver's door lock, return to the vertical position and remove. The entire vehicle is unlocked. Switch on the ignition to deactivate the anti-theft alarm system ✻.

To lock
With the driver's door closed, turn the key clockwise in the lock, return to the vertical position and remove. The entire vehicle is locked.

Malfunction in central locking system

To unlock
Turn key anticlockwise in driver's door lock, return to the vertical position and remove. The driver's door is unlocked. The other doors can be unlocked by pulling the interior lock buttons (not possible if the anti-theft locking system is enabled ✻). Switch on the ignition to deactivate the anti-theft alarm system ✻.

To lock
With the driver's door open, press the interior lock button of the other doors. Close the driver's door. Turn the key clockwise in the lock, return to the vertical position and remove. The fuel filler flap cannot be locked.

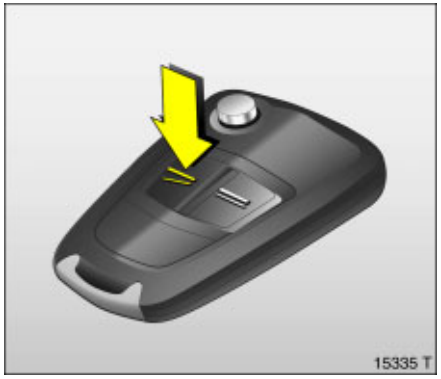

Tailgate

To unlock
Press button ⊼ on the remote control, the tailgate and the doors will be unlocked.

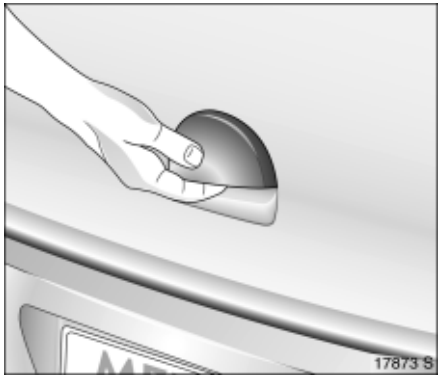

To open
The tailgate is opened by pulling on the button in the handle recess.

⚠Warning
Do not drive with the tailgate open or ajar, e.g. when transporting bulky objects, since toxic exhaust gas could penetrate the interior.

After fitting certain accessories, it might not be possible to keep the tailgate in the open position.

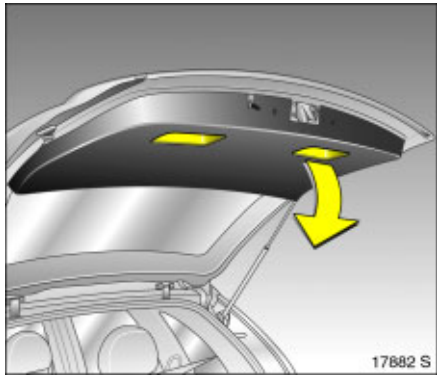

To close
Close the tailgate using the handle on the inside of the tailgate.

Do not press the release button in the trim recess while closing as this will unlock it again.

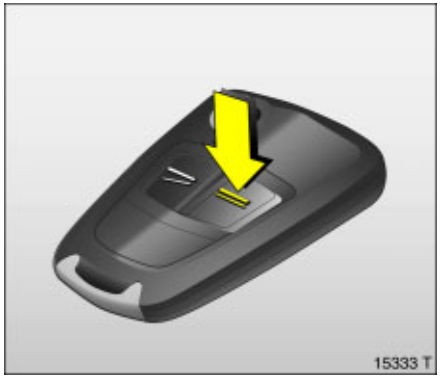

To lock
Press button ⚌ on radio remote control.

Anti-theft alarm system ✻

Monitors

- the doors, luggage compartment, bonnet.
- the passenger compartment.
- vehicle tilt, e.g. if it is raised.
- the ignition.

⚠Warning
Do not use the system if there are people in the vehicle! The doors cannot be unlocked from the inside.

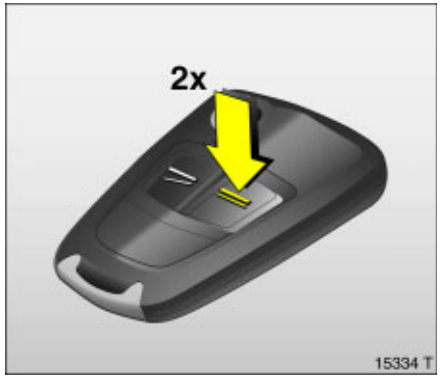

To activate

All doors, windows, sun roof ✻, tilting roof ✻ and bonnet must be closed. Press button ⚌ on the radio remote control again within 10 seconds of locking.

If the ignition was switched on, the driver's door must be opened and closed once so that the anti-theft alarm system can be switched on.

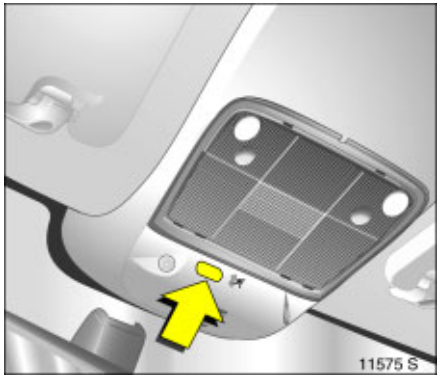

Activation without monitoring of passenger compartment and vehicle tilt

Switch on e.g. if animals are to be left in the vehicle.

1. Close tailgate and bonnet.
2. Press button in front of the courtesy lamp (with ignition off); LED in the hazard warning lamp button flashes a maximum of 10 seconds.
3. Close doors.
4. Activate the anti-theft alarm system. The LED lights up. After approx. 10 seconds, the system is activated. The LED flashes until the system is deactivated.

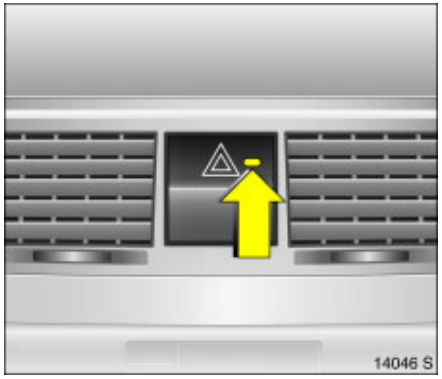

Light emitting diode (LED)
During the first 10 seconds of anti-theft alarm system activation:

- LED comes on = Test, delayed switch-on,
- LED flashes rapidly = Door, tailgate or bonnet open, or system fault.

After the first 10 seconds of anti-theft alarm system activation:

- LED flashes slowly = System switched on,
- LED comes on for approx. 1 second = Switch-off function.

Contact a workshop for assistance if problems are encountered.

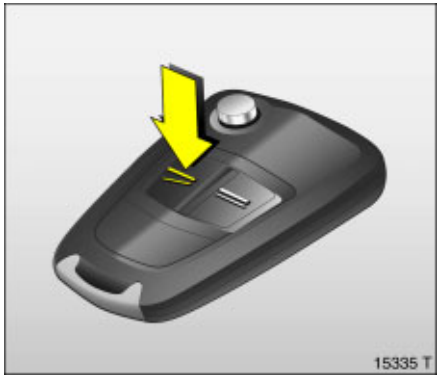

To deactivate
Press button on remote control unit

– or –

switch on ignition.

In the case of a malfunction in the remote control, use the key to unlock the vehicle ⇨ 32.

If the alarm is triggered when the driver's door is opened, deactivate the anti-theft alarm system by switching on the ignition.

Note

- Changes to the vehicle interior, such as the use of seat covers, could impair the function of passenger compartment monitoring.
- Switch off the interior monitoring system when the interior of a parked vehicle is being heated.

Alarm

When triggered, the alarm gives off an acoustic signal (horn) and a visual signal (hazard warning flashers). The number and duration of the alarms are stipulated by legislation.

The alarm can be silenced by pressing a button on the remote control or by switching on the ignition. The anti-theft alarm system is deactivated at the same time.

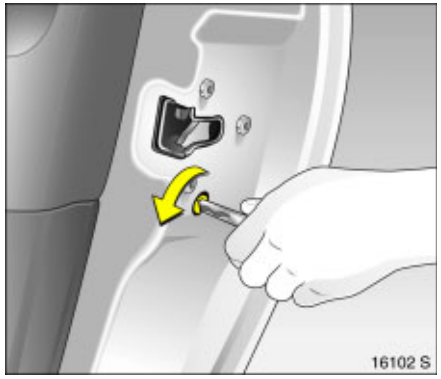

Child safety locks

⚠Warning
Use the child safety lock whenever children are occupying the rear seats.

Turn rotary knob at rear door lock from vertical position using key: door cannot be opened from the inside.

Exterior mirrors

Adjust manually with the handles in the front door or electrically ✻ with the switch in the driver's door console.

Adjust exterior mirrors manually

Use the knob to move the exterior mirrors in the appropriate direction.

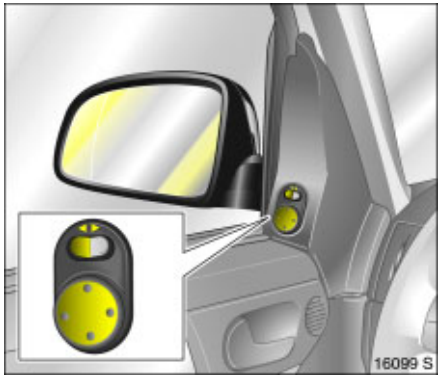

Adjust exterior mirrors electrically ✻
Select the mirror to be adjusted using the rocker switch and adjust using the four-way switch.

Aspherical exterior mirror ✻
The aspherical mirror glass makes the blind angle smaller. The curvature makes objects look smaller, making it more difficult to estimate how far away following vehicles are.

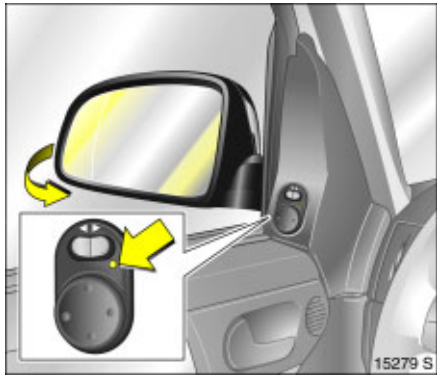

To retract exterior mirrors
Manual: The exterior mirrors can be folded in by a slight pressure on the outer edge of the housing.

Electric ✻: Press button and both exterior mirrors fold in.

Press button again and both exterior mirrors swivel back to the driving position.

If a mirror has been manually adjusted, swivel in both mirrors by hand and then press the button.

After electrical operation, there is a 6 second delay before it can be swung again.

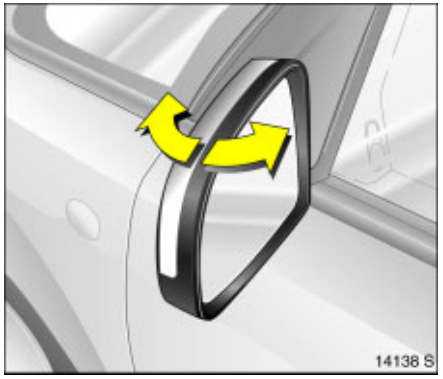

For the safety of pedestrians, the exterior mirrors will swing out of their normal mounting position if they are bumped with sufficient force. Reposition the mirror by applying slight pressure to the mirror housing.

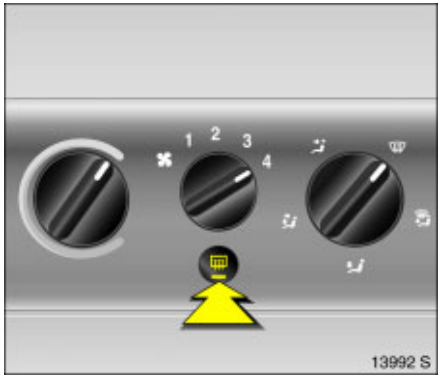

Heated exterior mirrors ✻
Heating is activated or deactivated by pressing the button.

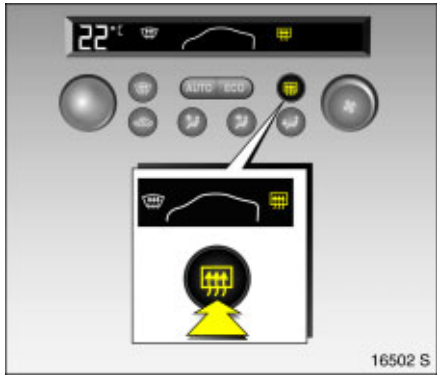

On vehicles with electronic climate control appears on the climate control display.

Heating works with the engine running and is switched off automatically after a few minutes.

Interior mirror

Swivel mirror housing to adjust.

Manual anti-dazzle interior mirror
To reduce dazzle, swivel the lever on the underside of the mirror housing.

Automatic:Anti-dazzle interior mirror ✻
Dazzling at night is reduced automatically.

The interior mirror does not reduce dazzle when:

- the ignition is switched off.
- reverse gear is engaged or selector lever set to **R.**
- interior lighting has been switched on.

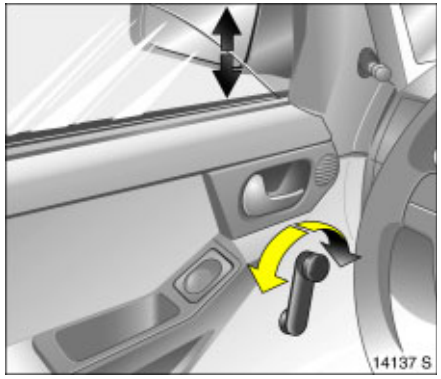

Manual window operation

The door windows can be operated using window winders.

Electric windows ✻

⚠Warning

Take care when operating the electric windows. Risk of injury, particularly to children.

If there are children on the rear seat, switch on the child safety system ✻ for the electric windows.

Keep a close watch on the windows when closing them. Ensure that nothing becomes trapped in them as they move.

Operational readiness
Operable when the ignition key is in position 1.

Button illumination indicates operational readiness.

Operational readiness ends when the driver's door is opened.

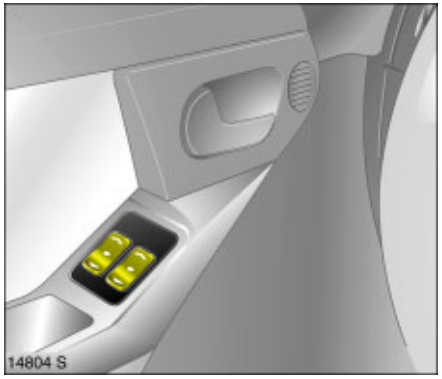

Operation
To operate window in stages, tap appropriate switch. For automatic opening or closing, keep switch pressed for slightly longer; to stop window movement, tap switch again.

Safety function
If the window glass encounters resistance above the middle of the window during automatic closing, it is immediately stopped and the window opened again.

If the windows do not move easily (e.g. on account of frost), repeatedly tap the switch for the window in question until the window has been closed in stages.

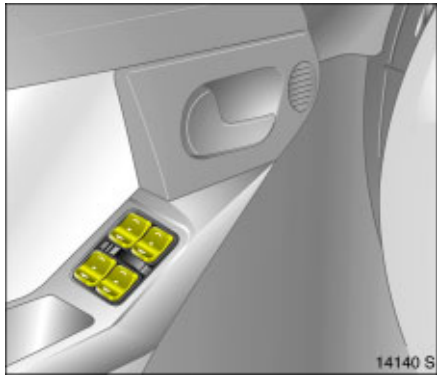

Child safety system for rear windows ✻
Switch between the rocker switches in the handle on the driver's door

- to left (red control indicator visible): rear windows cannot be operated with the rocker buttons in the rear doors,
- to right (green control indicator visible): rear windows can be operated with the rocker buttons in the rear doors.

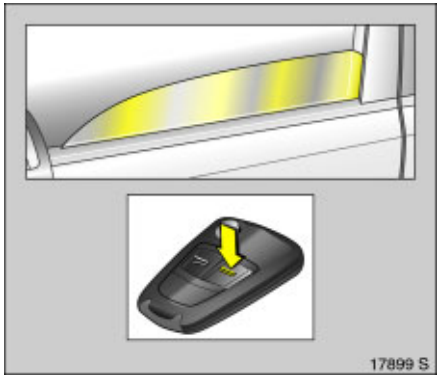

Closing windows ✻ from outside
On vehicles with electric windows in all doors, the windows can be closed from outside:
Hold button ⚌ of the remote control depressed until all of the windows have closed completely.

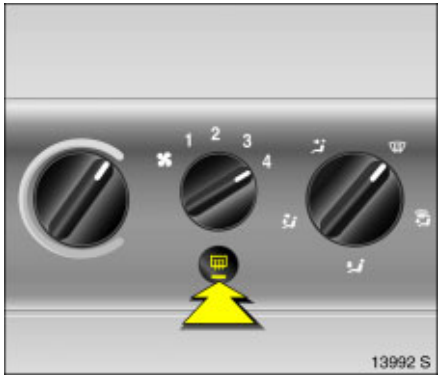

Heated rear window ✻
Heating is activated or deactivated by pressing the button.

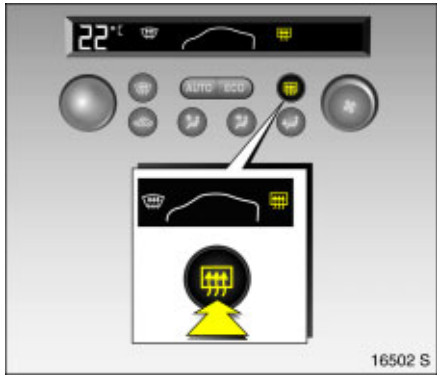

On vehicles with electronic climate control appears on the climate control display.

Heating works with the engine running and is switched off automatically after a few minutes.

The heated rear window automatically switches on when the diesel particle filter is being cleaned ✻ depending on the engine.

Climate control ⇨ 114.

Overload
If the windows are repeatedly operated at short intervals, the power supply is briefly cut off.

Fault
If the windows cannot be opened and closed automatically, activate the window electronics as follows:

1. Close doors.
2. Switch on ignition.
3. Close the window completely and hold the rocker switch down at least 5 seconds longer.
4. Open the window completely and hold the rocker switch down at least 1 second longer.
5. Repeat for each window.

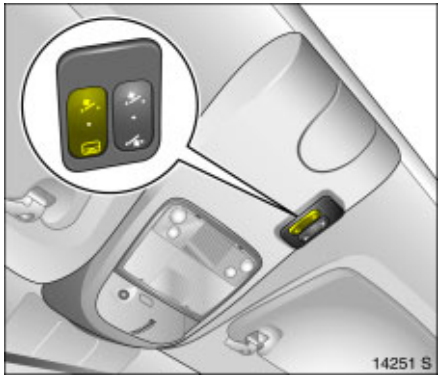

Sun roof and tilting roof ✻

⚠Warning
Take care when operating the sunroof ✻ and the slide/tilt roof ✻. Risk of injury, especially for children. Keep a close watch on the sun roof when it is being closed. Ensure that nothing becomes trapped.

Front roof (sliding sun roof)
Left rocker switch and . between the sun visors. Operable when the ignition is on.

To open:
Press button , sun roof opens. To stop the movement, press button again.

To close
Press button . until the sun roof is closed.

To raise
With the sun roof closed, press button . until sun roof is open.

To lower
Press button until the sun roof is closed.

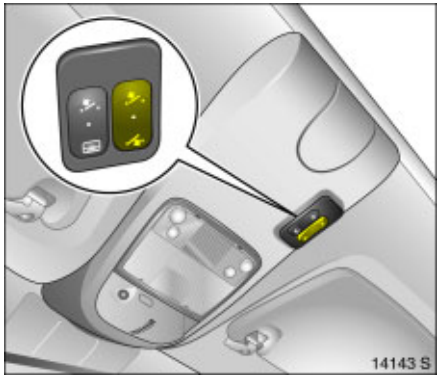

Rear roof (tilting sun roof)
Right rocker switch . and . between the sun visors. Operable with the ignition is on.

To raise
Press button . until tilting roof has been raised.

To lower
Press button . until tilting roof has closed.

Sun shade
To reduce the sunlight in the interior with the sliding roof closed or raised.

Open or close sun shade as required.

When the sun roof is opened, the sun shade is also opened.

Note
- If the top of the roof is wet, raise roof, allow water to run off and then open roof.
- When using a roof rack, check the clearance of the sun roof to avoid damage.

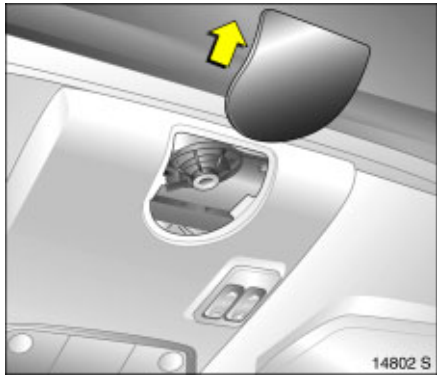

Fault
If the electric drive fails, the system is protected by a fuse in the fuse box ⇨ 181. Until the fault is remedied, operate the sun roof as follows:

Push drive cover backwards.

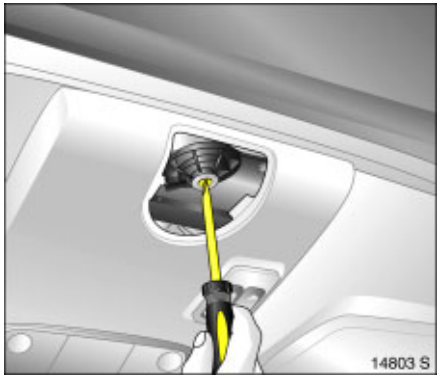

Use a screwdriver ✻ to push the drive shaft in and turn until the sunroof or slide/tilt roof is closed.

Seats, Interior

Front seats 44
Head restraints 46
Armrest ✻ 48
Travel Assistant ✻ 48
Rear seats 51
Flexible Seat System (FlexSpace) 52
Luggage compartment extension 53
Luggage compartment cover ✻ 55
Safety net ✻ 56
Lashing eyes 57
Bag hangers ✻ 57
Notes on loading the vehicle 58
Three-stage safety system 59
Three-point seat belts 59
Belt tensioners 60
Using the belts 62
Mounting clips ✻ for ISOFIX child restraint systems 64
Child restraint system ✻ 65
Airbag system 67
Cigarette lighter ✻ 78
Accessory sockets ✻ 78
Ashtrays 79
Stowage compartments 80
Foldaway tables ✻ 81
Coin holder ✻ 81
Sun visors 81

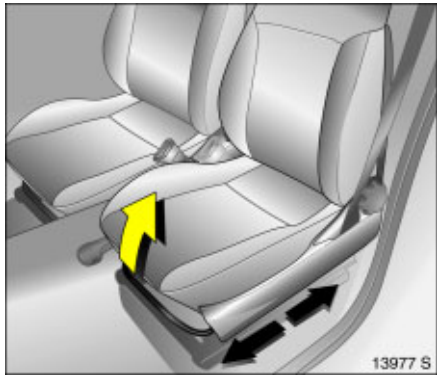

Front seats

⚠Warning

Never adjust seats while driving. They may make uncontrolled movements.

Adjust longitudinal seat position
Pull handle at front of seat, move seat and then release handle.

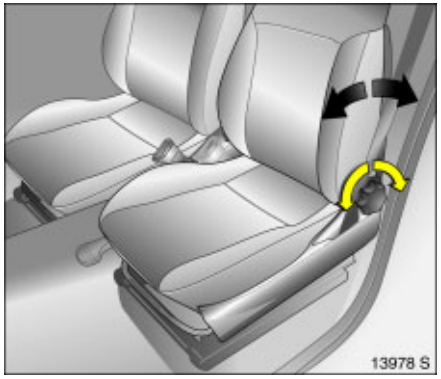

Adjusting the backrests
Take the pressure off the backrest and turn the hand wheel on the side.

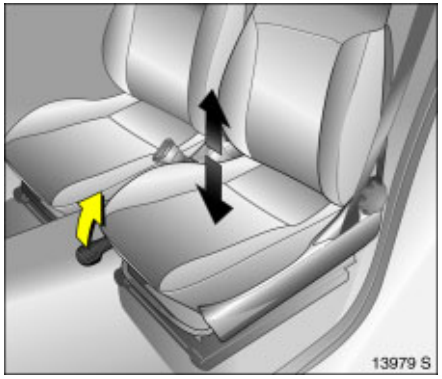

Adjusting the seat height ✻
Lift front side lever and relieve some weight from seat to raise it or press down on seat with body weight to lower it.

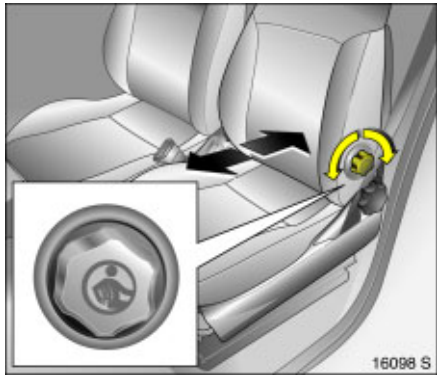

Adjusting the lumbar support ✻
Turn side hand wheel on backrest while relieving the load on the backrest.

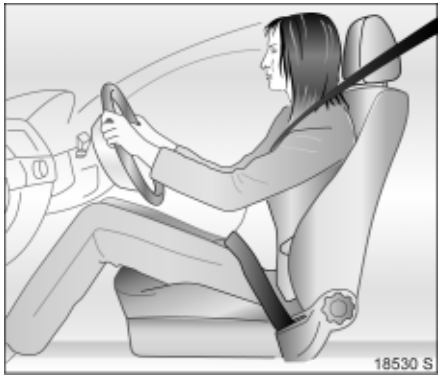

Seat position

⚠Warning
Only drive with the seat correctly adjusted.

- Sit with your buttocks as far back against the backrest as possible. Adjust the distance between your feet and the pedals so that your legs are slightly angled when pressing the pedals. Slide the passenger seat as far back as possible.

- Sit with your shoulders as far back against the backrest as possible. Set the backrest rake so that you can easily reach the steering wheel with your arms slightly bent. Maintain contact between your shoulders and the backrest when turning the steering wheel. Do not angle the backrest too far back. We recommend a maximum rake of approx. 25☐.
- Adjust the steering wheel ➪ 5.
- Set seat height ✻ high enough to have a clear field of vision on all sides and of all display instruments. There should be at least six inches of clearance between your head and the headlining. Your thighs should rest lightly on the seat without pressing into it.
- Adjust the head restraint.
- Adjust the height of the seat belt ➪ 62.
- Adjust the lumbar support ✻ so that it supports the natural shape of the spine.

Heated front seats ✻
Two buttons between the centre air vents for the left and right seats.

To heat with the ignition switched on, press button ♨.

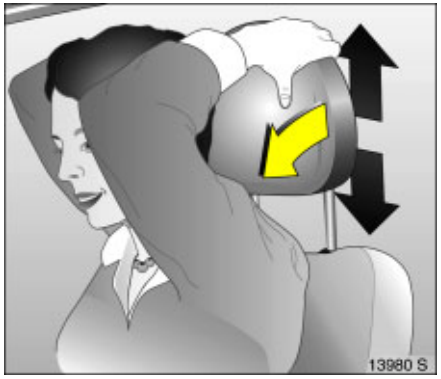

Head restraints

Adjusting the front head restraints and the rear outboard head restraints ✻
Tip head restraint forward, hold and adjust height.

To fold over the rear seats or lower the front passenger seat head restraint all the way down and remove, see next page.

With the seats occupied, adjust height according to body size.

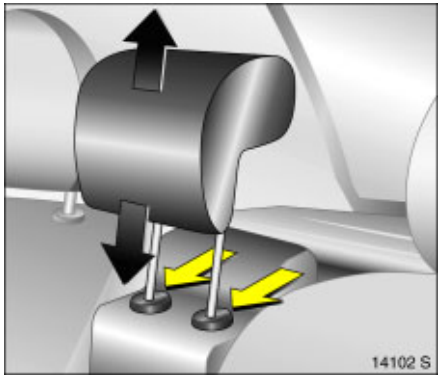

Adjusting the rear centre head restraint
Pull head restraint upwards, press springs and push head restraint down.

To improve visibility push headrest down as far as possible if middle seat is unoccupied or to increase the size of the luggage compartment.

Fold down centre seat ⇨ 54.

If centre seat is occupied, pull head restraint upwards.

Head restraint position

⚠Warning
Only drive with the head restraint set to the proper position.

The middle of the head restraint should be at eye level. If this is not possible for extremely tall persons, set to highest position, and set to lowest position for small persons.

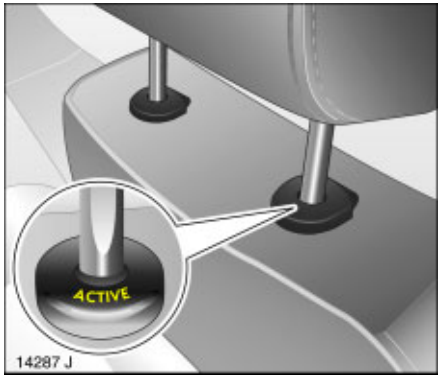

Active head restraints ✻ on front seats
In the event of a rear-end impact, the active head restraints automatically tilt slightly forward. The head is more effectively supported by the head restraint and the danger of injury in the area of the cervical vertebra is reduced.

Active head restraints can be recognised by the word **ACTIVE**.

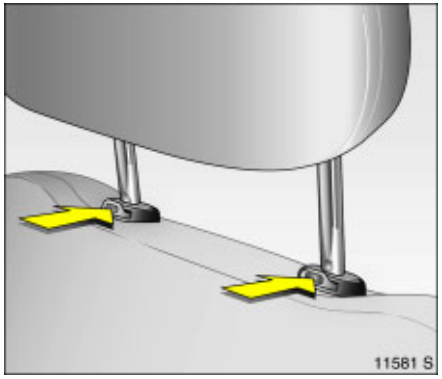

Removing
Press and release the two catches. Pull and remove the head restraint.

To fold down the rear seat backrests ✻ ➪ 53, push rear head restraints fully down.

Note
Only approved objects or components must be attached to the head restraint of the unoccupied front passenger seat.

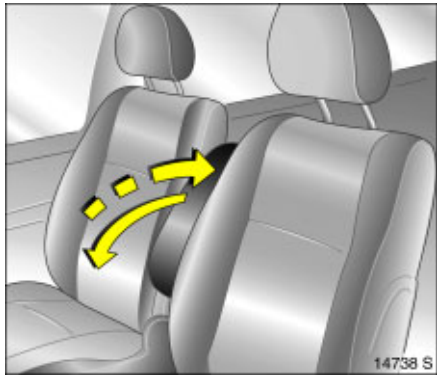

Armrest ✻

Armrest at driver's seat
Push raised armrest backward against resistance and fold down.

The armrest can be moved to different positions in stages by lifting it.

If the armrest is not required, it can be folded up.

Armrest ✻ between rear seats
See "Travel Assistant, armrest" ➪ 49.

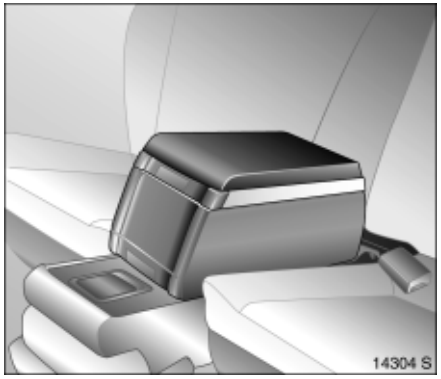

Travel Assistant ✻

The Travel Assistant Contains
- Armrest,
- Tray,
- Drink holders.

The Travel Assistant is mounted on the lowered centre seat ➪ 54.

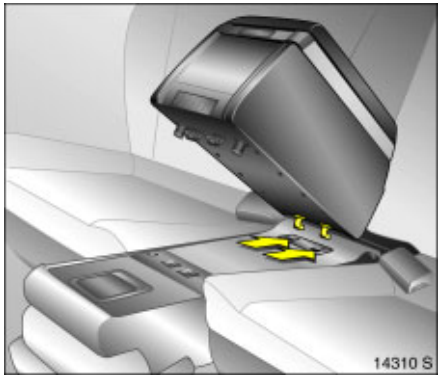

Installing The Travel Assistant
Lower centre seat ⇨ 54.

Insert Travel Assistant in rear recesses on back of middle seat.

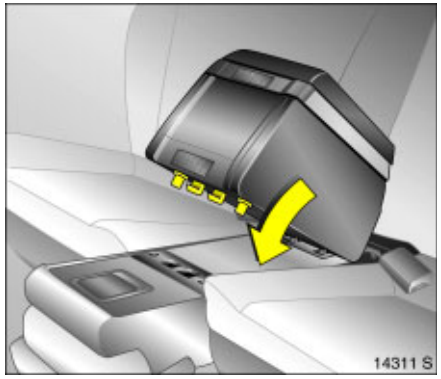

Fold Travel Assistant down and audibly engage in front recesses.

⚠Warning
If it is not correctly engaged, the Travel Assistant can be propelled forward with considerable force if hard braking occurs, possibly causing injury.

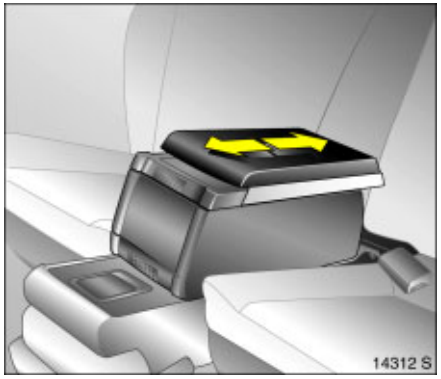

Armrest
The arm rest can be moved and therefore adapted to the position of the outboard seats.

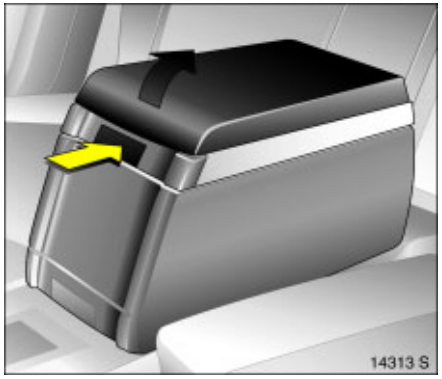

Tray
There is a tray beneath the armrest. Open tray by pushing upper button.

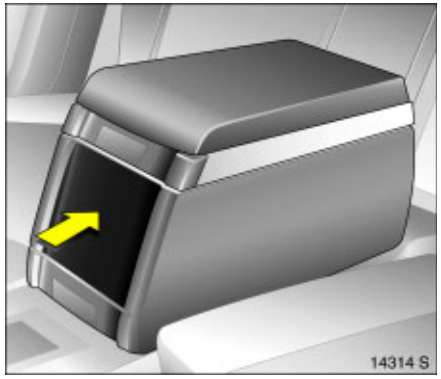

Drink holder
Open drink holder on front by pressing front face.

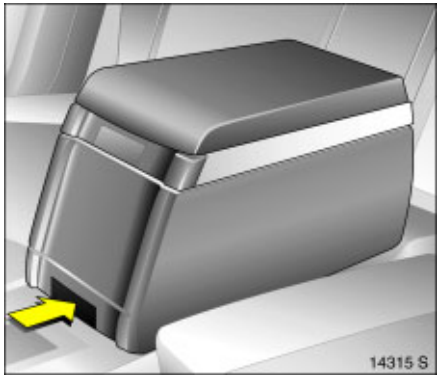

Dismantling the Travel Assistant
Press lower button on the Travel Assistant.

Pull Travel Assistant upwards out of recesses.

There is a carrying handle on the back to facilitate transport.

It is not necessary to remove the Travel Assistant if you wish to raise the centre seat, however, the armrest must be pushed forwards. Be careful of any items in the Travel Assistant.

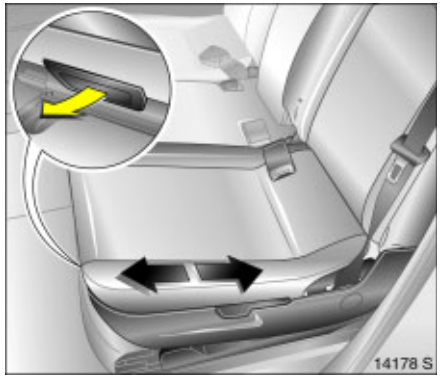

Rear seats

Sliding outboard rear seats front-rear

The rear outboard seats can be individually adjusted front-rear.

Pull handle under seat, move seat, release handle and allow seat to engage.

When pushing the seats back, to prevent damage make sure the backrests are not in their furthest back position.

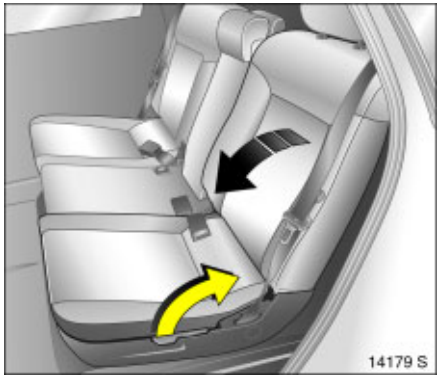

Adjust backrest rake of rear outboard seats

Grasp backrest, pull handle at outboard side of seat and guide backrest, unloaded, into the required position. Release handle and allow backrest to engage.

The backrest rake can be set in three positions.

⚠Warning

To prevent injuries, always hold back seat backrest firmly and guide downward when folding.

To achieve a flat loading surface in the extended luggage compartment, the outboard seats can be lowered slightly. We recommend however only using the seats as seats in the raised position. Extending the luggage compartment ➪ 53.

Flexible Seat System (FlexSpace)

The rear seat row on the Meriva can be fitted with three seats in Variant 1, or two seats with maximum seating space in Variant 2. In Variant 2, the centre seat is lowered.

The luggage compartment can only be extended in Variant 1 ➪ 53.

To extend the luggage compartment, the outboard seats can be lowered slightly ➪ 54.

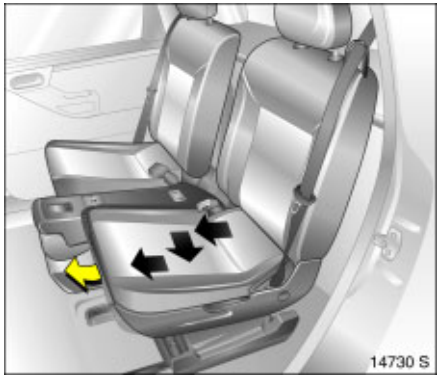

Variant 1: Three rear seats
Set seat backrest to centre position using the handle on the outside of the seat ➪ 51.

Pull the handle beneath the seat. Slide the seat all the way forward, then outward toward the door and then further forward to the desired position.

Release handle and allow seat to engage in position.

Raise centre seat ➪ 54.

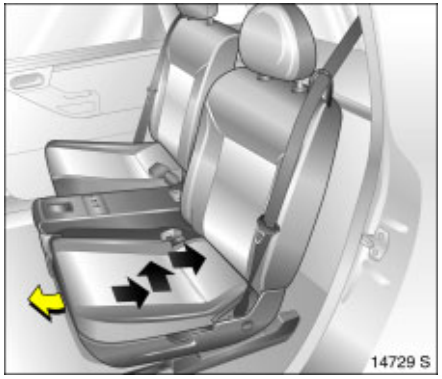

Variant 2: Two rear seats
Lower the centre seat by pulling the release handle on the back of the centre seat backrest, fold backrest forward and engage ⇨ 54.

Set seat backrest to centre position using the handle on the outside of the seat ⇨ 51.

Pull the handle beneath the seat. Slide the seat all the way back, then inward toward the middle of the vehicle, and then further back to the desired position

Release handle and allow seat to engage in position.

Luggage compartment extension

To increase the size of the luggage compartment you can

- fold down the outboard rear seat backrests,
- lower the middle seat,
- lower the folded outboard seats,
- fold down the passenger seat backrest ✻,

see following instructions.

The rear seats must also be in "Variant 1: Three rear seats" ⇨ 52.

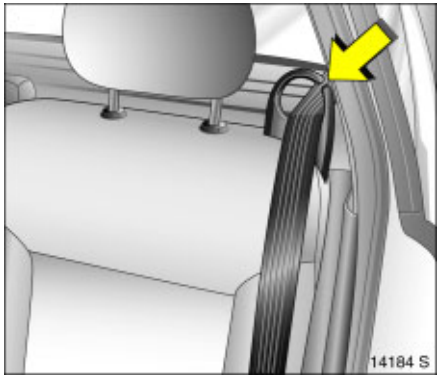

Fold down the outboard rear seat backrests
Remove the luggage compartment cover ✻ if necessary ⇨ 55.

Push head restraints down fully, ⇨ 3, ⇨ 46. Take seat belt out of the belt guide on the backrest.

Remove the push-in sleeves ✻ for mounting the ISO-FIX child restraint system – see separate instructions for the ISO-FIX child restraint system.

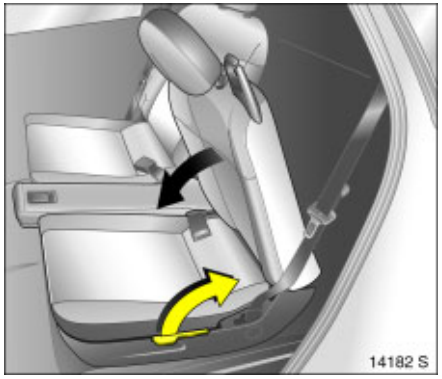

Grasp the backrest, pull the handle at the outboard side of the seat and fold the backrest onto the seat. Release the handle and engage the backrest.

⚠Warning
To prevent injuries, always hold the seat backrest firmly and guide downward when folding.

To raise, pull the handle on the outboard side of the seat and raise the backrest. Release the handle and engage.

Insert the seat belt into the belt guide at backrest.

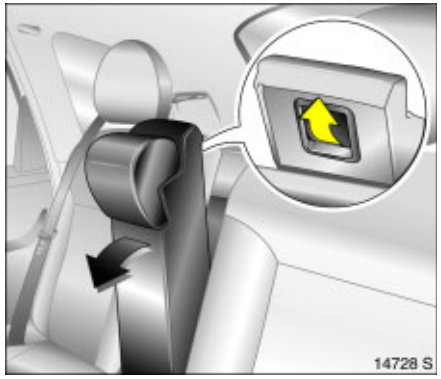

Fold the centre seat forward and lower.
House centre seat belt in the holder in the ceiling ⇨ 63.

Insert seat belts into recesses in seat cushion.

Slide centre seat head rest all the way down ⇨ 47.

Pull release handle on the back of the centre seat backrest, see figure. Fold backrest forward and engage. The entire seat is lowered.

⚠Warning
The load must not hinder the operation of the hand brake or gear lever ⇨ 58.

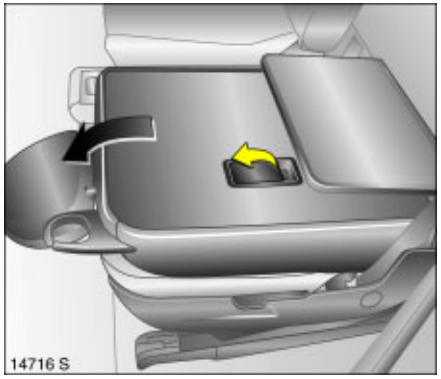

Raise centre seat
Pull release handle on the back of the backrest, erect the backrest and engage, the outer seats must be in the outer position, see Variant 1: Three rear seats ⇨ 52.

Lower outboard seats
Push front seat forward and fully lower or remove head restraints on the rear outboard seats ⇨ 47.

Fold outer rear seat backrests onto seat bases.

To achieve a level loading surface, pull release handle on back of backrest and push seat down until it latches into position.

Raise outboard seats
Pull release handle on back of backrest and pull seat upward until it engages.

Pull handle on outboard side of rear seat and move rear seat backrest upright. Release handle and latch.

Insert the seat belt into the belt guide at backrest.

The backrest can be raised to an upright position even with the seat lowered. We recommend however only using the seat as a seat in the higher position.

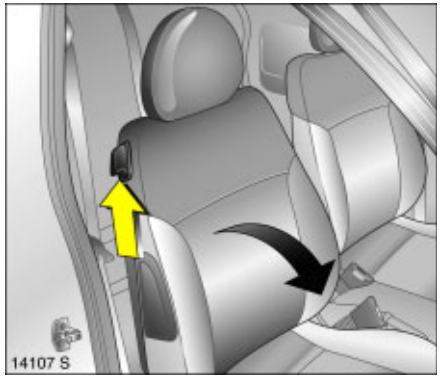

Fold down passenger seat backrest ✻
Push head restraint all the way down or remove ⇨ 3, ⇨ 46.

Push front passenger seat back.

Lift release lever and fold front passenger seat backrest down.

Raise front passenger seat backrest ✻
Press release lever forward, restore passenger seat backrest to upright position and engage audibly.

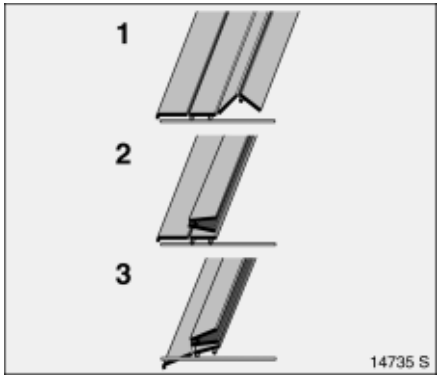

Luggage compartment cover ✻

Do not place any heavy or sharp-edged objects on the cover.

To open
Lift cover at rear and tilt forward segment by segment.

To close
Tilt top part of cover backward and latch into position.

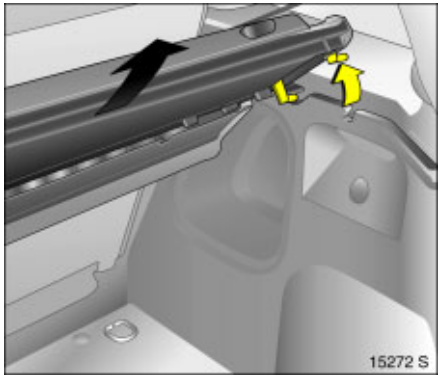

Removing
Open cover, disengage toward the rear and remove from above.

Fitting
Insert the cover from the rear, clip into place and fold back.

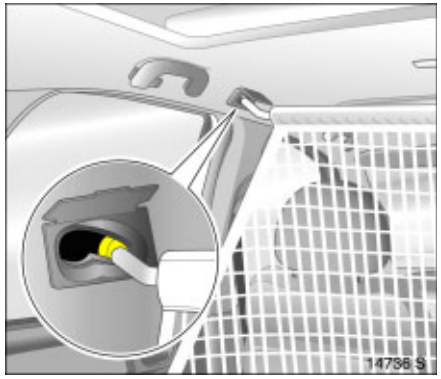

Safety net ✻

The safety net can be mounted behind the front seats. The rear seat backrests are folded forward.

Passengers must not be carried behind the safety net.

Fitting
The safety net is in the luggage compartment below the floor covering, see right-hand column.

Fold all rear seat backrests forward, see Extending the luggage compartment ⇨ 53.

The roof frame contains two mounting openings: Open covers. Hang the upper net rod first in one opening and then in the other side; clip in place forwards.

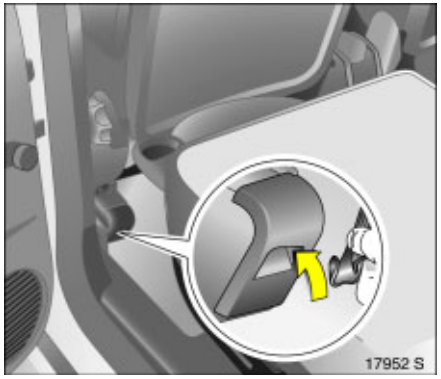

Hook the net straps into slots on the outer seat bracket of the front seats and tighten.

When the safety net is fitted for the first time, the slots on the outer seat consoles of the front seats must be opened once: press marked area on upper edge with a blunt object and bend inward.

Removing
Tilt strap length adjuster upwards and unhook straps at bottom. Unhook upper net rod and close mounting openings.

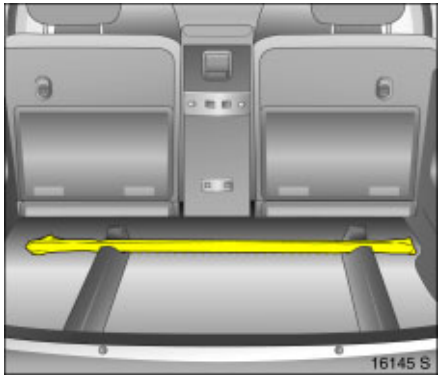

Stowage of safety net
Roll up the removed safety net and secure it with Velcro strip.

Store safety net in luggage compartment below the floor covering. To open, remove the luggage compartment cover ✻ ⇨ 55, lift floor covering at handle recess and tip forward ⇨ 171. Position safety net at the front in the recesses.

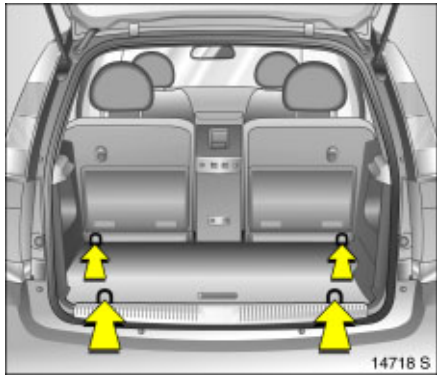

Lashing eyes

Lashing eyes are provided to secure objects against sliding B with straps ✻ or netting ✻.

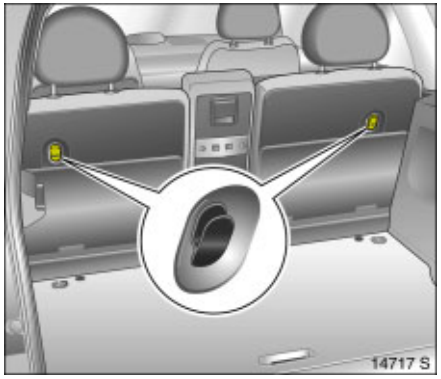

Bag hangers ✻

There are two retainers on the back of the rear seat backrests for hanging carrier bags on. Maximum load: 10 kg per retainer.

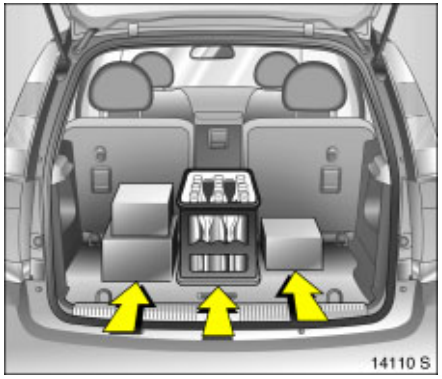

Notes on loading the vehicle

- Heavy objects in the luggage compartment should be placed as far forward as possible against the properly engaged rear seat backrests or, if the rear seat backrests are folded down, against the front seat backrests. If objects are to be stacked, the heavier objects should be placed at the bottom.
- Secure heavy objects with lashing straps ✻ attached to lashing eyes ➪ 57.
- When transporting objects with rear seat backrests tilted forward, fit the safety net ➪ 56.
- Close luggage compartment cover ✻ ➪ 55.
- If the backrests are not folded down when transporting objects in the luggage compartment, they must be engaged in an upright position ➪ 55.
- Do not allow the load to protrude above the upper edge of the backrests.
- The warning triangle ✻ and first-aid kit (cushion) ✻ must always be freely accessible.
- Do not place any objects on the luggage compartment cover ✻ or the instrument panel.
- No objects must be placed in the airbag inflation area, since they could cause injury when the systems are triggered.
- Items loaded must not prevent operation of the pedals, hand brake and gears or obstruct the freedom of movement of the driver. Do not place loose objects in the interior.
- Do not drive with luggage compartment open when transporting bulky objects, for example, since toxic exhaust fumes could penetrate the interior.
- The payload is the difference between the permitted gross vehicle weight (see identification plate ➪ 218) and the EC kerb weight.
- To calculate the EC kerb weight, enter the data for your vehicle on page ➪ 226.
- The EC kerb weight includes allowances for the driver (68 kg), luggage (7 kg) and all fluids (tank 90 % full).
- Optional equipment and accessories increase the kerb weight.
- Weights and loads ➪ 226.
- Driving with a roof load increases the sensitivity of the vehicle to cross-winds and has a detrimental effect on vehicle handling due to the vehicle's higher centre of gravity. Distribute the load evenly and secure it properly with retaining straps. Adjust the tyre pressure to the load conditions. Do not drive faster than 120 km/h. Check and re-tighten the straps frequently. Observe country-specific regulations.
- The permissible roof load is 100 kg. The roof load consists of the weight of the roof rack plus the load carried.

Three-stage safety system

Comprising:

- three-point seat belts,
- belt tensioners at the front seats,
- airbag systems for the driver and front passenger seats ✻ as well as the outboard rear seats ✻.

The three stages are activated in sequence depending on the severity of the accident:

- The automatic seat belt locking devices prevent the belt strap from being pulled out and thus ensure that the vehicle occupants are retained in their seats.
- The front seat belts are pulled down at the belt buckles. This means the belts fit snugly, the occupants are decelerated early with the vehicle and the body loading is reduced.
- The airbag systems are also triggered in the event of severe accidents and form a safety cushion for the occupants.

⚠Warning

The airbag systems serve to supplement the three-point seat belts and belt tensioners. The seat belts must therefore always be worn. Disregard of these instructions may lead to injuries or endanger life. Vehicle passengers should be informed accordingly.

Read the instructions supplied with the child restraint system

Three-point seat belts

The seat belts have an automatic retractor, so that the belt is spring tensioned and always lies against the body.

Information on correct seat position ⇨ 45.

The safety belts lock when the vehicle accelerates or decelerates rapidly. This prevents the belt from extending and keeps the occupant in his or her seat.

⚠Warning

Fasten your seat belt before each trip.

In the event of an accident, persons not wearing seat belts endanger their fellow occupants and themselves.

Seat belt control indicator ⇨ 82.

Seat belts are only intended for one person. They are not suitable for anyone under 12 years of age or under 150 cm tall.

For children under the age of 12, we recommend the Opel child restraint system ⇨ 65.

Belt force limiters
In the front seats, stress on the body is reduced by dampened release of the safety belt during a collision.

Checking the seat belts
From time to time, check operation of all seat belt system components and check for damage. Have damaged components replaced. Have seat belts and deployed belt tensioners replaced by an authorised workshop after an accident.

Make sure that seat belts are not damaged or trapped by sharp-edged objects.

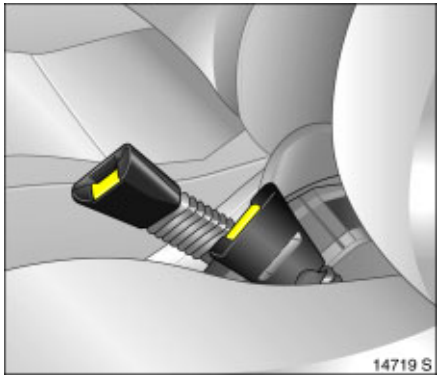

Belt tensioners

The front safety belt systems tighten at the buckles in the event of a front or rear collision above a specific degree of severity. This tensions the seat belts.

Actuation of belt tensioners
is indicated by illumination of control indicator, see next column.

Triggered belt tensioners must be replaced by a workshop. Belt tensioners can only be triggered once.

Control indicator for belt tensioners
The function of the belt tensioners and airbag systems is monitored electronically and indicated via control indicator .
When the ignition is turned on, the control indicator comes on for about 4 seconds.
If it does not light, does not go out after 4 seconds or comes on during driving, there is a fault in the belt tensioner or airbag systems ⇨ 72.The systems may fail to deploy in the event of an accident.

Deployment of the belt tensioners is indicated by continuous illumination of .

⚠Warning

Have the cause of the fault remedied immediately by a workshop.

The system's integrated self-diagnostics allows faults to be quickly remedied.

Important

- Do not affix or place accessories or other objects within the deployment zone of the belt tensioners. Do not make any modifications to belt tensioner components as this will invalidate the vehicle type approval.

⚠Warning

Incorrect handling (e.g. removal or fitting of seat belts or belt buckles) can cause the belt tensioners to deploy, with risk of injury.

- The belt tensioner and airbag system control electronics can be found in the centre console area. In order to avoid malfunctions, do not store magnetic objects in this area.
- When the rear seats are being used it must be ensured that the components of the front seat belts are not damaged by shoes or other objects. Do not allow dirt to penetrate the seat belt inertia reels.
- We recommend that you have the seats removed by a workshop.
- The belt tensioners only deploy once, which can be detected by illumination of the control indicator . Have deployed belt tensioners replaced by a workshop.
- The applicable safety regulations must be adhered to when the vehicle is disposed of. The vehicle should therefore be disposed of by a recycling company.

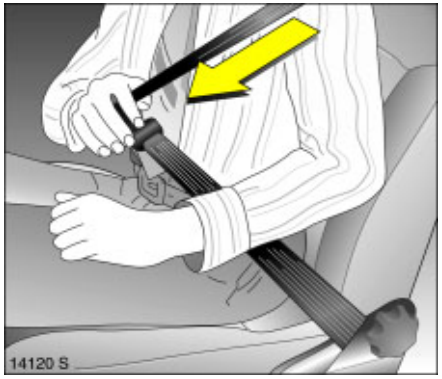

Using the belts

Fitting seat belts

The seat belt must not be twisted and must lie snugly against the body. The backrest must not be tilted back too far (maximum approx. 25□).

Adjust the height so that the belt lies across the shoulder. It must not lie across the throat or upper arm.

Pull the belt out of the reel, guide it across the body (making certain it is not twisted) and engage the latch plate in the buckle. Tension the lap belt frequently whilst driving by tugging the shoulder belt.

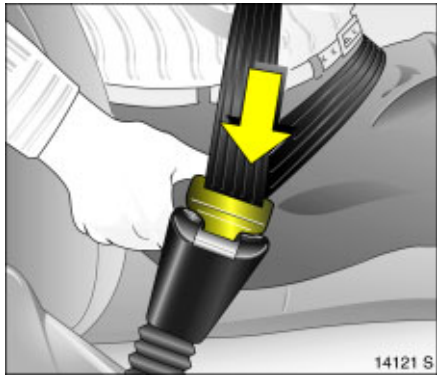

⚠Warning

On pregnant women in particular, the lap belt must be positioned as low as possible across the pelvis so as not to put too much pressure on the abdomen.

Loose or bulky clothing prevents the belt from fitting snugly. Do not place objects such as handbags or mobile phones between the belt and your body.

⚠Warning

The belt must not rest against hard or fragile objects in the pockets of your clothing.

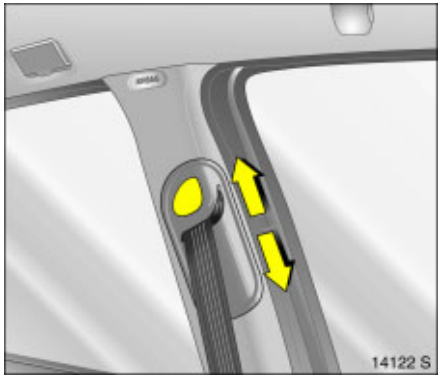

Height adjustment
Adjusting the height of the upper deflection point of the front seat belts:

1. Unreel seat belt a little.
2. Push button on sliding adjuster.
3. Set desired height.
4. Allow sliding adjuster to audibly latch.

Do not adjust height while driving.

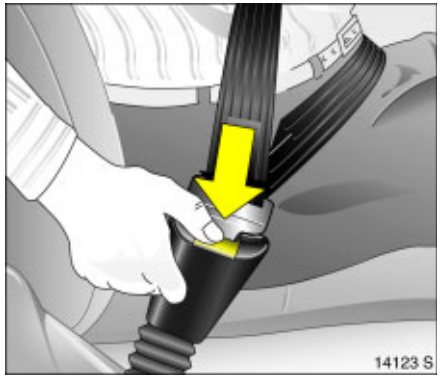

Removing the belt
To release seat belt, press red button on belt buckle.

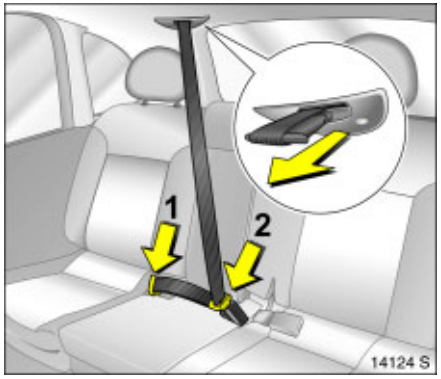

Three-point seat belt on centre rear seat
Pull latch plates out of belt retainer in roof.

Click bottom latch plate into right-hand buckle (**1**) at middle seat. Remove top latch plate from retainer, guide over shoulder and lap area with belt (do not twist) and click into left buckle (**2**) at middle seat.

If using the centre seat, both outboard seats must be pushed backward and the backrests must be flush with the centre seat backrest ⇨ 52.

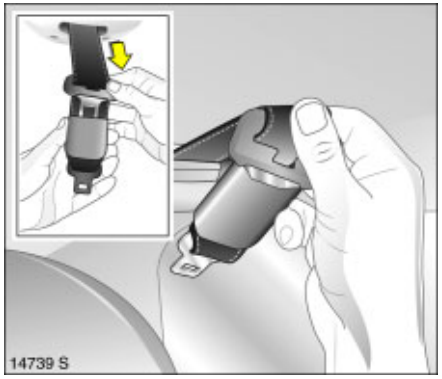

To remove the seat belt, press the button on the left buckle (**2**). If the centre seat is lowered, press the button on the right buckle (**1**). The seat belt retracts automatically.

Push the upper latch plate into the holder for the lower latch plate. Fold over locked together latch plates against the seat belt.

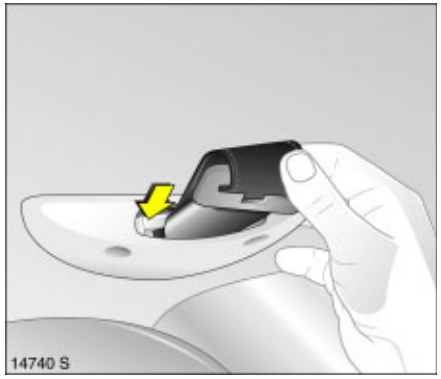

Insert in the seat belt holder in the roof with the lower latch plate pointing forward.

Mounting clips ✻ for ISOFIX child restraint systems

The ISOFIX points for fitting a child seat are located between the seat backrest and the seat surface.

Fasten permitted ISOFIX child restraint systems to the mounting brackets.

Closely follow the installation instructions accompanying the ISOFIX child restraint system.

Child restraint system ✻

Follow the usage instructions for the child restraint system.

Always comply with local or national regulations. In some countries, the use of child restraint systems is forbidden on certain seats.

Selecting the right system
Your child should be transported facing the rear in the vehicle for as long as possible. The very weak cervical vertebrae of a child will be under less stress in an accident if your child is facing the rear and semi-horizontal, than when he is sitting upright.

⚠Warning

Child restraint systems must not be carried on a passenger's lap. Danger to life.

Permissible options for fitting a child safety seat[1)]

Weight and age class[2)]	On front passenger seat	On outboard seats in the rear seats	On centre rear seat
Group 0: **up to 10 kg** or approx. 10 months **Group 0+:** **up to 13 kg** or approx. 2 years	B[1], +	U, +	U, ++
Group I: **9 to 18 kg** or approx. 8 months to 4 years	B[2], +	U, +	U, ++
Group II: **15 to 25 kg** or approx. 3 to 7 years **Group III:** **22 to 36 kg** or approx. 6 to 12 years	X	U	U, ++

1) For reasons of safety, we recommend that the child safety seat be installed on one of the outer rear seats.
2) We recommend the use of each system until the child reaches the upper weight limit.

B^1 = Conditional, without front passenger airbags or with seat occupancy recognition and Opel child restraint systems with transponders.

The front passenger seat must also have a height adjusting facility: move to highest position, slide front passenger seat all the way back and move front passenger seat belt anchorage point to lowest possible position.

B^2 = Conditional, without side airbag, of front passenger seat has been slid all the way back, or with seat occupancy recognition and Opel child restraint systems with transponders.

The front passenger seat must also have a height adjusting facility: move to highest position and slide front passenger seat all the way back so that the seat belt runs towards the front from the anchorage point.

U = Universal suitability in conjunction with three-point seat belt.

+ = Vehicle seat available with ISOFIX fixings. When using ISOFIX, only ISOFIX child restraint systems approved for the vehicle may be used.

++ = Only if both outboard seats are pushed back and flush with the centre seat.

X = No child restraint system permitted in this weight class.

Note

- Children under 12 years or under 150 cm tall should only travel in an appropriate child restraint system.
- When transporting children, use the child restraint systems suitable for the child's weight.
- Ensure correct installation of child restraint system, see the instructions enclosed with the system.
- The covers of the Opel child restraint system can be wiped clean.
- Do not stick anything on the child restraint systems and do not cover them with any other materials.
- Only allow children to enter and exit at the side facing away from the traffic.
- A child restraint system which has been subjected to stress in an accident must be replaced.
- Secure or remove child restraint systems that are in the vehicle but not in use.

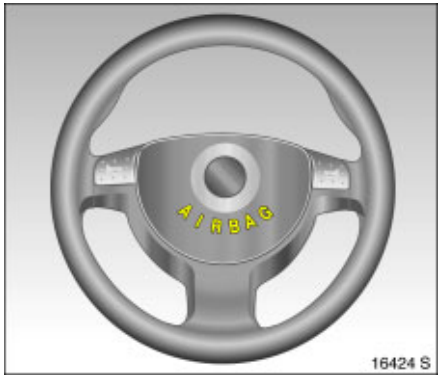

Airbag system

Front airbag

The front airbag system consists of one airbag in the steering wheel and one in the instrument panel. These can be identified by the word **AIRBAG**.

The front airbag system comprises:

- an airbag with inflator in the steering wheel and a second one in the instrument panel ✻,
- the control electronics with impact sensor,
- the control indicator for airbag systems in the instrument,

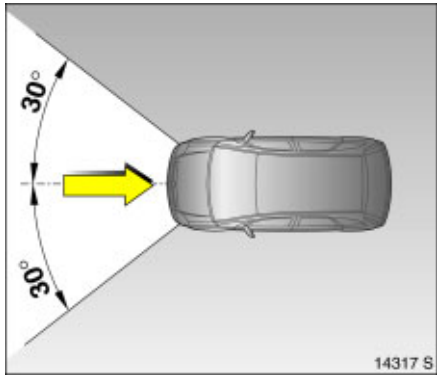

- seat occupancy recognition ✻,
- the control indicator for Opel child restraint systems with transponders ✻ in the courtesy lamp.

The front airbag system will be triggered:

- depending on the severity of the accident,
- depending on the type of impact,
- within the range shown in the illustration,
- independently of the side airbag system ✻ and curtain airbag system ✻.

The ignition must be switched on.

Exception:
Passenger seat with a seat occupancy recognition system ✻. The occupancy recognition system deactivates the front and side airbags for the passenger when the seat is unoccupied or an Opel child restraint system with transponders ✻ is fitted to the passenger seat. Seat occupancy recognition ➪ 72. Opel child restraint system with transponders ✻ ➪ 73.

Examples of events triggering the front airbag system:

- Impact against a non-yielding obstacle: the front airbags are triggered at low vehicle speed.
- Impact against a yielding obstacle (such as another vehicle): the front airbags are only triggered at a higher vehicle speed.

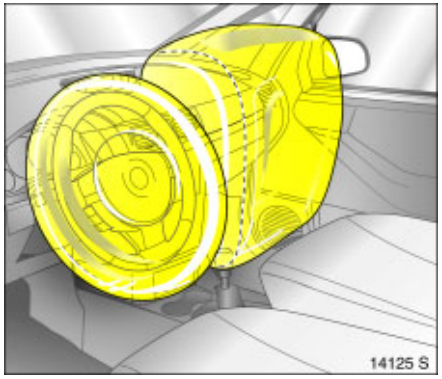

When triggered, the front airbags inflate in milliseconds to form a safety cushion for the driver and front passenger. The forward movement of the front seat occupants is checked, thereby substantially reducing the risk of injury to the upper body and head.

No impairment of view will occur, because the airbags inflate and deflate so quickly that it is often not even noticed in an accident.

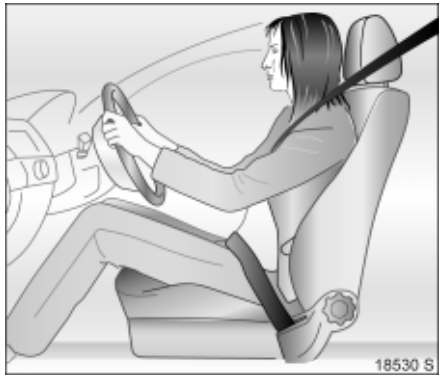

⚠Warning

Optimum protection is only provided with the seat in the proper position ⇨ 45.

Keep the area in which the airbag inflates clear of obstructions.

Wear the three-point seat belt properly fastened. The front airbag system is an additional safety device, not a replacement for your seat belt.

The front airbag system will not be triggered in the event of

- the ignition is switched off,
- minor frontal collisions,
- accidents in which the vehicle overturns,
- collisions involving a side or rear impact,

that is to say, if it would not be of benefit to the occupants.

In addition, the front airbag system will not be triggered for the front passenger in versions with seat occupancy recognition ✻ if

- the front passenger seat is unoccupied,
- or there is a properly mounted Opel child restraint system with transponders ✻. Seat occupancy recognition ⇨ 72. Opel child restraint system with transponders ✻ ⇨ 73.

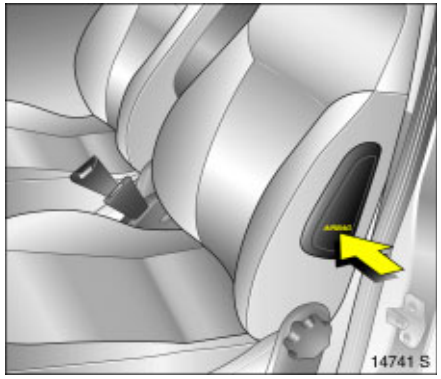

Side airbag ✻
The side airbag system consists of an airbag in each front seat backrest. This can be identified by the word **AIRBAG**.

The side airbag system comprises:
- an airbag with inflator in the back of the driver's and front passenger seat respectively
- the control electronics,
- the side impact sensors,
- the control indicator for airbag systems in the instrument,
- seat occupancy recognition ✻,
- the control indicator for Opel child restraint systems with transponders ✻ in the courtesy lamp.

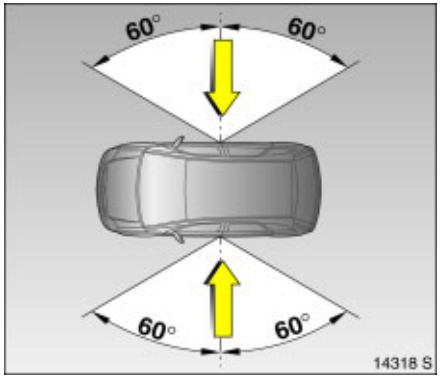

The side airbag system will be triggered:
- depending on the severity of the accident,
- depending on the type of impact,
- within the range shown in the illustration on the centre door pillar of the driver's or front passenger side,
- independently of the front airbag system.

The ignition must be switched on.

Exception:
Passenger seat with a seat occupancy recognition system ✻. The occupancy recognition system deactivates the front and side airbags for the passenger when the seat is unoccupied or an Opel child restraint system with transponders ✻ is fitted to the passenger seat. Seat occupancy recognition ⇨ 72. Opel child restraint system with transponders ✻ ⇨ 73.

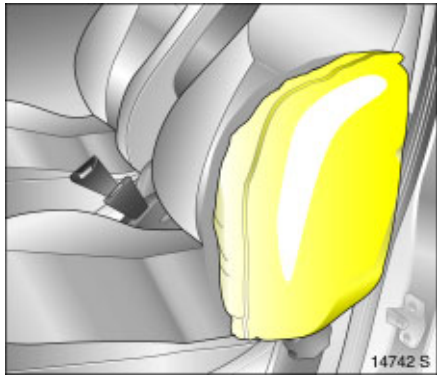

When deployed, the side airbag inflates within milliseconds to form a safety cushion for the driver or front passenger in the respective front door area. This substantially reduces the risk of injury to the upper body and pelvis in the event of a side-on collision.

⚠Warning

Keep the area in which the airbag inflates clear of obstructions.

The side airbags will not be triggered in the event of
- the ignition is switched off,
- frontal collisions,
- accidents in which the vehicle overturns,
- collisions involving a rear impact,
- collisions involving a side impact outside the passenger cell.

In addition, the side airbag system will not be triggered for the front passenger in versions with seat occupancy recognition ✻ if
- the front passenger seat is unoccupied
- or there is a properly mounted Opel child restraint system with transponders ✻. Seat occupancy recognition ⇨ 72. Opel child restraint system with transponders ✻ ⇨ 73.

Curtain airbag ✻
The curtain airbag system consists of an airbag in the roof frame on each side. This can be identified by the word **AIRBAG** on the roof pillar.

The curtain airbag system comprises:
- an airbag with inflator in the roof frame on the driver's and front passenger side respectively,
- the control electronics,
- the side impact sensors,
- the control indicator for airbag systems in the instrument.

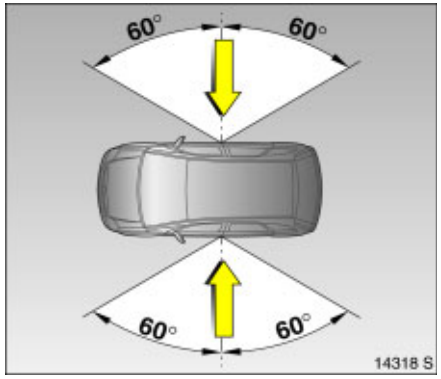

The curtain airbag system will be triggered:
- depending on the severity of the accident,
- depending on the type of impact,
- within the range shown in the illustration on the centre door pillar of the driver's or front passenger side,
- together with the side airbag system,
- irrespective of seat occupancy recognition,
- independently of the front airbag system.

The ignition must be switched on.

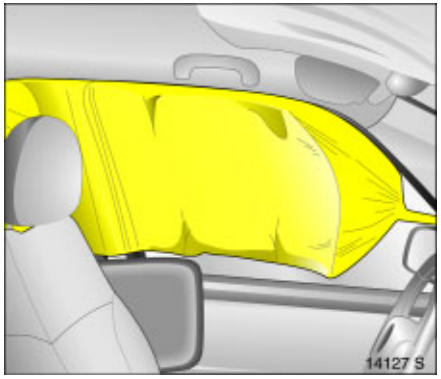

When the curtain airbag is triggered it inflates within milliseconds and provides a safety barrier in the head area on the respective side of the vehicle. This reduces the risk of injury to the head considerably in case of a side impact.

⚠Warning

Keep the area in which the airbag inflates clear of obstructions.

The curtain airbags will not be triggered in the event of

- the ignition is switched off,
- frontal collisions,
- accidents in which the vehicle overturns,
- collisions involving a rear impact,
- collisions involving a side impact outside the passenger cell.

Control indicator for airbag systems
The function of the airbag systems and seat occupancy recognition ✻ is monitored electronically and indicated via control indicator. When the ignition is turned on, the control indicator comes on for about 4 seconds. If it does not light, does not go out after 4 seconds or comes on during driving, there is a fault in the airbag systems, the seat occupancy recognition system ✻ or the belt tensioners ⇨ 61. The systems may fail to deploy in the event of an accident.

Deployed airbags are indicated by continuous illumination of.

⚠Warning

Have the cause of the fault remedied immediately by a workshop.

The system's integrated self-diagnostics allows faults to be quickly remedied.

Seat occupancy recognition ✻
The seat occupancy recognition system deactivates the front and side front passenger airbags if the front passenger seat is unoccupied or an Opel child restraint system with transponders ✻ has been fitted to the front passenger seat. The curtain airbag system ✻ remains activated.

The control indicator for seat occupancy recognition is located in the courtesy lamp. If this control indicator illuminates for approx. 4 seconds after the ignition is switched on, the vehicle is equipped with seat occupancy recognition ⇨ 73, Fig. 12097 S.

If an Opel child restraint system with transponders ✻ is fitted, this control indicator lights permanently after the ignition is switched on as soon as the system has detected the child restraint system. Only then may the child restraint system with transponders ✻ be used on the passenger seat.

Vehicles with seat occupancy recognition can be identified by the sticker on the front passenger seat or on the side of the instrument panel.

Opel child restraint systems with transponders ✻ are detected automatically when installed properly on the passenger seat. When these child restraint systems are used on the passenger seat, the front and side airbag systems for the passenger seat are deactivated. The curtain airbag system remains activated. Observe the control indicator for seat occupancy recognition ✻ ⇨ 73.

⚠Warning

Only Opel child restraint systems with transponders ✻ should be fitted on the front passenger seats. Use of systems without transponders poses a risk of fatal injury.

Opel child restraint systems with transponders ✻ can be identified by a sticker or badge.

Control indicator for Opel child restraint systems with transponders ✻
The presence of an Opel child restraint system with transponders ✻ is indicated after the ignition has been switched on by permanent illumination of the control indicator in the courtesy lamp, as soon as the seat occupancy recognition system has detected the child restraint system.

If the control indicator does not come on while driving, the front and side airbags for the passenger are not de-activated and there is a risk of injury or death to the child. Fit child restraint systems on the rear seat. Have the cause of the fault eliminated by a workshop.

If the child restraint system is not correctly installed or the transponders are defective, the indicator lamp will flash. Check for correct child restraint system installation. For installation of child restraint system with transponders ✻ – see instructions provided with child restraint system.

If the control indicator flashes when the child restraint system with transponders ✻ is correctly fitted, there is a fault with risk of injury to the child. Fit child restraint systems on the rear seat. Have the cause of the fault eliminated by a workshop.

If no Opel child restraint system with transponders ✻ is fitted, the control indicator must not light or flash as the passenger airbag systems would not deploy. Have the cause of the fault eliminated by a workshop.

⚠Warning

If the Opel child restraint system with transponders ✻ has been fitted according to the instructions, the control indicator for Opel restraint systems with transponders must illuminate in the courtesy lamp when the ignition is switched on.

If the control indicator does not come on while driving, the passenger airbag systems are not de-activated and there is a risk of injury or death. In this case fit child restraint systems on the rear seat. Have the cause of the fault eliminated by a workshop.

Important

- Placing accessories and objects in the expansion region of the airbag systems is not permitted due to the risk of injury if the airbag is triggered.
- Do not place any objects between the airbag systems and the vehicle occupants; danger of injury.

⚠Warning

As with any other object, child restraint systems must not be carried on a passenger's lap. Danger to life.

- Use the hooks in the roof frame only to hang up light articles of clothing or coat hangers. Do not place any objects in the pockets of the hanging items – risk of injury.
- The airbag systems and belt tensioner control electronics can be found in the centre console area. In order to avoid malfunctions, do not store magnetic objects in this area.
- Do not stick anything on the steering wheel, instrument panel, front seat backrests or roof frame in the vicinity of the airbags, or on the front passenger's seat cushion, or cover any of those areas with other materials.
- Use only a dry cloth or interior cleaner to clean the steering wheel, instrument panel, front seat backrests, roof frame and seat cushion of the front passenger seat. Do not use any aggressive cleaning agents.
- Only protective covers which are approved for your vehicle with side airbag may be fitted on the front seats. When fitting the protective covers, make sure that the airbag units on the outboard sides of the front seat backrests are not covered.
- The airbag systems are triggered independently of each other depending on the severity of the accident and the type of impact. The side airbag system ✻ and the curtain airbag system ✻ are triggered together.
- Each airbag deploys once only. Have a workshop replace deployed airbags immediately.

- The speeds, directions of movement and deformation properties of the vehicles, and the properties of the obstacle concerned, determine the severity of the accident and triggering of the airbags. The degree of damage to your vehicle and the resulting repair costs alone are not indicative that the criteria for triggering of the airbags were met.
- Do not perform any alterations on the components of the airbag system, as this would render the vehicle unroadworthy.

⚠Warning

If handled improperly the airbag systems can be triggered in an explosive manner – risk of injury!

- We recommend having the steering wheel, the instrument panel, all panelling parts, the door seals, the handles and the seats removed by a workshop.
- The applicable safety regulations must be adhered to when the vehicle is disposed of. The vehicle should therefore be disposed of by a recycling company.
- Persons weighing less than 35 kg should only travel on the rear seats. This does not apply to children who are travelling in child restraint systems with transponders ✻.
- In vehicles with seat occupancy recognition ✻, do not place any heavy objects on the front passenger seat otherwise the airbag systems for the front passenger seat may be triggered in the event of an accident.
- In vehicles with seat occupancy recognition ✻, to prevent malfunctions do not use protective covers or seat cushions on the front passenger seat.
- When using an Opel child restraint system with transponders ✻ on the front passenger seat, in order to prevent malfunctions, no objects (e.g. plastic sheet, stickers or heated mats) may be placed under the child restraint system.

⚠Warning

Child restraint systems or other objects must never be carried on the laps of passengers; If carried in this way, child restraint systems with transponders ✻ in vehicles with seat occupancy recognition ✻ could lead to front passenger airbag systems not being triggered in the event of an accident.

Use of child restraint systems ✻ on the front passenger seat in vehicles with airbag systems ✻, but without seat occupancy recognition ✻

⚠Warning

Vehicles with front passenger airbag ✻ without side airbag ✻: Child seats facing the rear of the vehicle must not be installed on the front passenger seat, risk of fatal injury. Child seats facing the direction of travel (child seats for weight classes I, II and III, following pages) may be installed on the front passenger seat if the seat has been pushed back as far as it will go and the backrest has been adjusted such that the lap belt fits snugly.

Vehicles with front passenger airbag can be recognised by the word **AIRBAG** above the glove compartment and by the sticker on the instrument panel on the passenger side - see Fig. 11704 A.

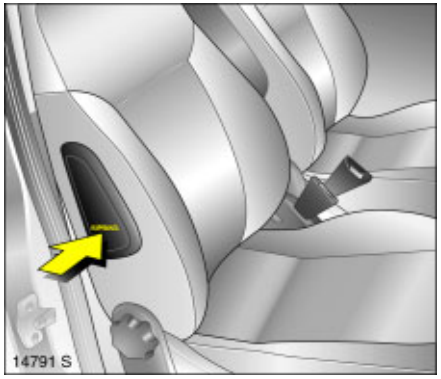

⚠Warning

Vehicles with side airbag ✻: No child restraint system ✻ may be fitted on the front passenger's seat; risk of fatal injury.

A vehicle with side airbags can be identified by the word **AIRBAG** on the outboard sides of the front seat backrests.

Seat occupancy recognition ✻ ⇨ 72.

Use of child restraint systems ✻ on front passenger seat in vehicles with airbag systems ✻ and with seat occupancy recognition ✻

⚠Warning
Only Opel child restraint systems with transponders ✻ can be fitted on the front passenger seats. Use of systems without transponders poses a risk of fatal injury.

Vehicles with seat occupancy recognition are identified by a sticker on the lower panel of the front passenger seat – see Fig. above.

Vehicles with seat occupancy recognition can also be recognised by control indicator ✻. If control indicator ✻ illuminates for approx. 4 seconds after the ignition is switched on, the vehicle is equipped with seat occupancy recognition ⇨ 72.

The seat occupancy recognition system detects Opel child restraint systems with transponders ✻ and switches off the front and side airbag systems for the front passenger seat. The curtain airbag system remains activated. Seat occupancy recognition ⇨ 72.

Opel child restraint systems with transponders ✻ can be identified by a sticker or badge.

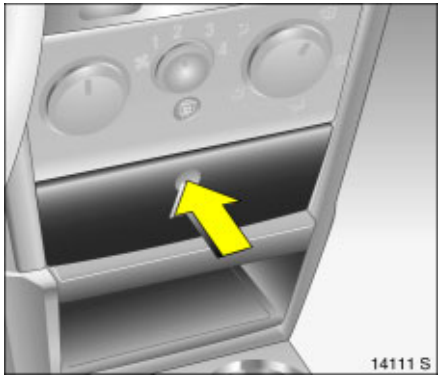

Cigarette lighter ✻

The cigarette lighter is behind the ashtray cover in the centre console.

The ashtray cover opens when pressed at the point indicated.

Press cigarette lighter with ignition switched on. Switches off automatically when element is hot. Withdraw cigarette lighter.

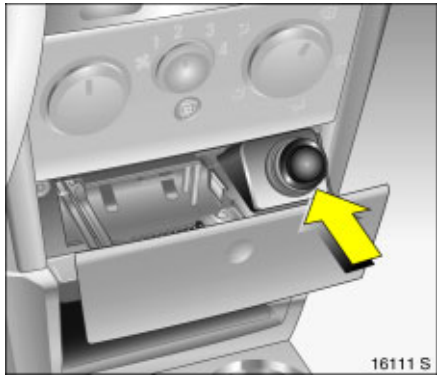

Accessory sockets ✻

The accessory socket is behind the cover in the centre console. Further accessory sockets ✻ are located in the centre console in front of the rear seats and in the luggage compartment.

Accessory sockets are operable when the ignition is switched on. Use of the sockets while the engine is not running will drain the battery.

Caution
Do not damage the socket by using unsuitable plugs.

Do not exceed the maximum power consumption of 120 watts.

Electrical accessories connected to the socket must comply with the electromagnetic compatibility requirements laid down in DIN VDE 40 839, otherwise vehicle malfunctions may occur.

Do not connect any current-delivering accessories, e.g. electrical charging devices or batteries.

If the tyre repair set is ✻ is in operation, no consumers may be connected to the auxiliary socket.

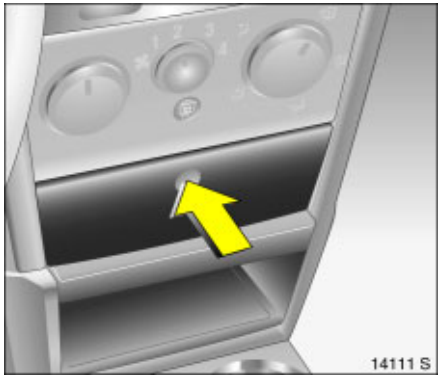

Ashtrays

Caution
To be used only for ash and not for combustible rubbish.

Ashtray, front
The ashtray is behind a cover in the centre console.

The cover opens when pressed at the point indicated.

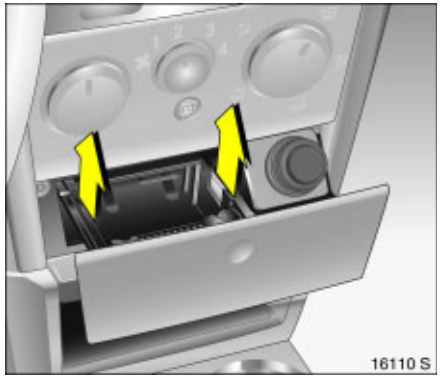

To empty, grip both sides of the ashtray insert at the spots illustrated and pull upwards.

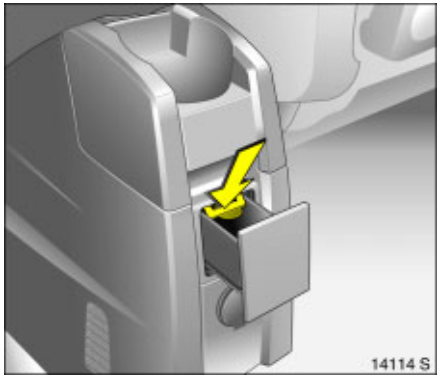

Rear ashtray ✻
The ashtray is in the rear centre console.

To open, pull ashtray towards the back of the vehicle.

To empty: open the ashtray, press the spring (arrow) and pull out the ashtray.

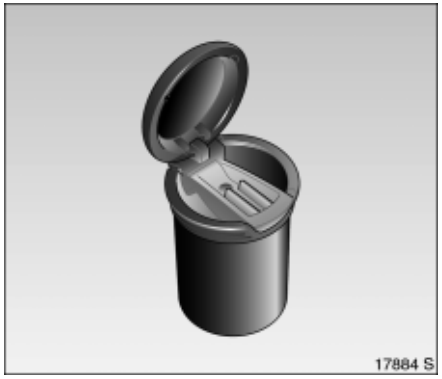

Ashtray ✻
The ashtray can be put in the front or rear of the centre console or in the oddments tray ✻.

To use, open cover.

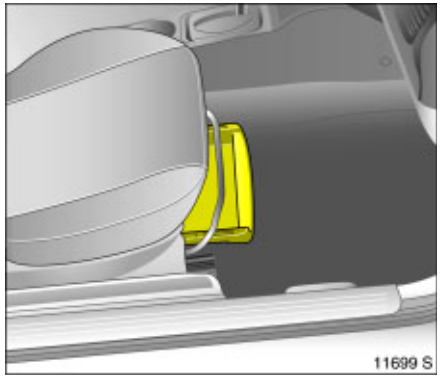

Stowage compartments

Stowage compartment ✻ beneath passenger seat
Lift stowage compartment by grasping recessed edge and pull out. Maximum load: 1 kg. To close the stowage compartment, push it in and engage.

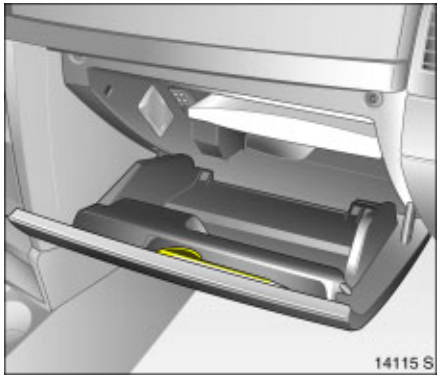

Glove compartment
To open, pull handle upwards.

On the inside of the glove compartment cover there is a pen holder.

The glove compartment should remain closed while driving.

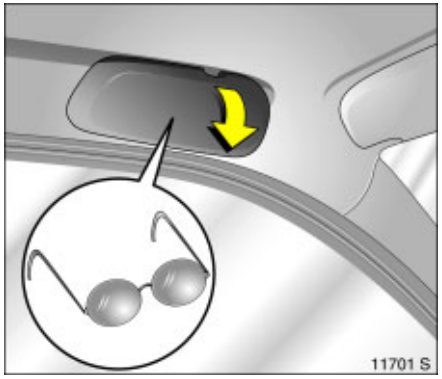

Stowage compartment for glasses ✻
On driver's side: fold down to open.

Do not store heavy objects in the stowage compartment.

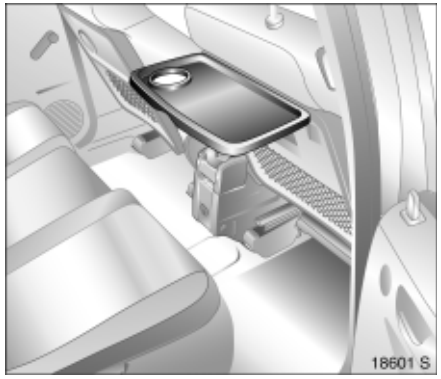

Foldaway tables ✻

These are located in the front seat backrests.

Open by pulling upward until it engages.

Fold away by pressing down past the resistance point.

Do not place any heavy objects on the table.

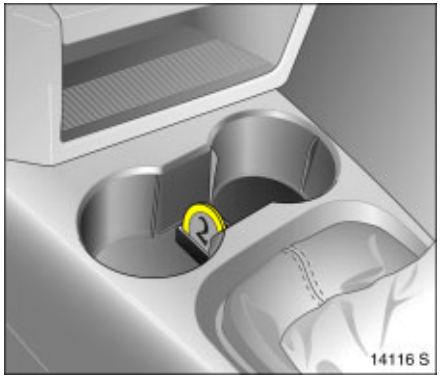

Coin holder ✻

In the centre console.

Sun visors

Use the sun visor to protect from glare by pulling it down and swivelling it to the side.

The mirror covers in the sun visors should be closed while driving.

Instruments, Controls

Control indicators 82
Instrument display 87
Information display 90
Warning buzzers 100
Windscreen wipers 100

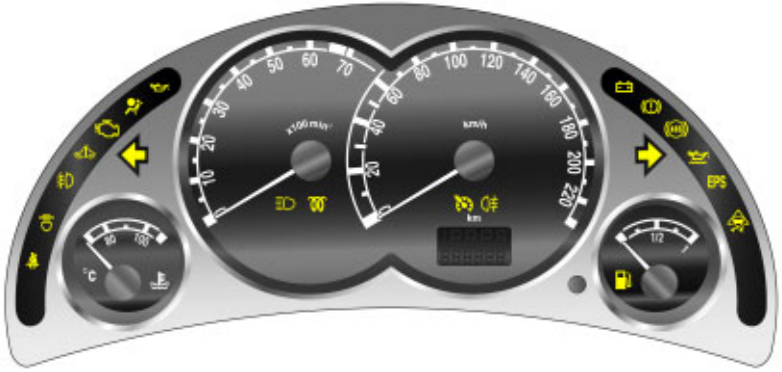

Control indicators

The control indicators described here are not present in all vehicles. The description applies to all instrument versions.

The colours of the control indicators mean:

- Red — Danger, important reminder.
- Yellow — Warning, information, fault.
- Green — Switch-on confirmation.
- Blue — Switch-on confirmation.

Seat belt ✻
Control indicator lights up red.

This comes on after turning on the ignition (with warning tone) until the seat belt is done up.

Fasten seat belt ⇨ 62.

Adaptive headlamp ✻ (AFL)
Control indicator lights up and/or flashes yellow.

Lamps
Fault in system. Contact a workshop for assistance.

Flashes
System converted to symmetrical dipped beam.

Control indicator flashes for approximately 4 seconds after the ignition is switched on as a reminder that the system has been converted ⇨ 110.

AFL ⇨ 106.

Fog lamps ✻
Control indicator lights up green.

This comes on when the front fog lamps are switched on ⇨ 103.

Engine electronics, transmission electronics, immobiliser, diesel fuel filter ✻
Control indicator lights up and/or flashes yellow.

It illuminates for a few seconds when the ignition is switched on.

Illuminates when the engine is running
Fault in engine electronics or transmission electronics. Electronics switches to emergency running program, fuel consumption may increase and driveability of vehicle may be affected ⇨ 143. If the fault is still there when the engine is started again, contact a workshop for assistance.

For vehicles with diesel engine, the diesel fuel filter may need to be drained of water ⇨ 212.

Flashes when the ignition is on
Fault in the electronic immobiliser system; the engine cannot be started ⇨ 27.

Exhaust emission
Control indicator lights up and/or flashes yellow.

It illuminates when the ignition is switched on and goes out shortly after the engine starts.

Illuminates when the engine is running
Fault in emission control system. The permissible emission limits may be exceeded. Contact a workshop for assistance immediately.

If it flashes when the engine is running
Fault that could lead to catalytic converter damage. Ease up on the throttle until the flashing stops ⇨ 143. Seek the immediate assistance of a workshop.

Airbag systems ✻, Belt tensioners
Control indicator lights up red.

Illuminates when the engine is running
Fault in zone of airbag system or belt tensioners ⇨ 61, ⇨ 72.

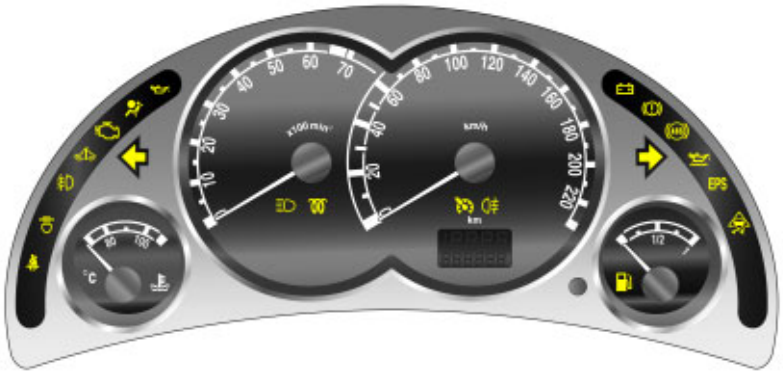

Engine oil pressure
Control indicator lights up red

It illuminates when the ignition is switched on and goes out shortly after the engine starts.

Illuminates when the engine is running

Caution
Engine lubrication may be interrupted. This may result in damage to the engine and/or locking of the drive wheels.

1. Depress clutch.
2. Move gearshift lever to neutral, or with manual transmission automated ✻ place selector lever in **N**.
3. Move out of the flow of traffic as quickly as possible without impeding other vehicles.
4. Switch off ignition.

⚠Warning
When the engine is off, considerably more force is needed to brake and steer. Do not remove key until vehicle has come to a standstill, otherwise the steering column lock could engage unexpectedly.

Contact a workshop for assistance.

Turn signal lamps
Control indicator flashes green.

The control indicator flashes if a turn signal or the hazard warning flashers are activated.

Rapid flashing: failure of a direction indicator lamp or associated fuse.

Change bulbs ➪ 185. Fuses ➪ 182.

Main beam
Control indicator lights up blue.

It is illuminated when main beam is on and during headlamp flash ➪ 11, ➪ 102.

Automatic transmission ✻, start engine.
Control indicator lights up yellow.

The engine can only be started if the foot brake is depressed. If the foot brake is not depressed, the control indicator illuminates ➪ 130.

Winter mode for manual transmission automated ✻
Control indicator lights up yellow.

Control indicator lights up when winter program is enabled ➪ 132.

Cruise control ✻
Control indicator lights up green

This comes on when the system is switched on ➪ 148.

Fog tail lamp
Control indicator lights up yellow.

This comes on when the fog tail lamp is switched on ➪ 104.

Alternator
Control indicator lights up red.

It illuminates when the ignition is switched on and goes out shortly after the engine starts.

Illuminates when the engine is running
Stop, switch off engine. Battery is not charging. Contact a workshop immediately.

Brake system, clutch system
Control indicator lights up or flashes red.

Illuminated
Illuminates when the ignition is switched on if the hand brake is applied ➪ 151.

Lights up when the hand brake is released when the fluid level for the brake or clutch systems is low ➪ 214.

⚠Warning
Stop. Do not continue your journey. Consult a workshop.

Flashes
On vehicles with manual transmission automated ✻, control indicator flashes for a few seconds after the ignition is switched off when the hand brake has not been applied.

Anti-lock brake system
Control indicator lights up red.

Illuminates while driving
Fault in anti-lock braking system ➪ 152.

Engine oil level ✻
Control indicator lights up yellow.

The engine oil level is checked automatically ✻.

Illuminates when the engine is running
Engine oil level too low. Check engine oil level and top up engine oil if necessary ➪ 210.

EPS[1)]
Electric power steering
Control indicator lights up yellow.

Fault in electrical power steering. Vehicle can still be driven, but greater force is required for steering. Contact a workshop immediately.

Electronic Stability Program (ESP®[Plus]) ✻
Control indicator flashes or lights up yellow.

Flashing during driving
System engages ⇨ 146.

Illuminates while driving
Fault in system ⇨ 146.

Fuel level
Control indicator lights up and/or flashes yellow.

Lamps
Level in fuel tank too low.

Flashes
Fuel level is used up, fuel immediately.

Never let the tank run dry!

Erratic fuel supply can cause catalytic converter to overheat ⇨ 142.

Diesel engines: Bleed the fuel system after running empty ⇨ 165.

Preheating system ✻, Diesel particle filter ✻
Control indicator lights up and/or flashes yellow.

Illuminated
Preheating activated. Only activates when outside temperatures are low.

Flashes
(in vehicles with diesel particle filter)

Control indicator flashes if the filter requires cleaning and previous driving conditions did not permit automatic cleaning. Continue driving and if possible do not allow engine speed to drop below 2000 rpm.

The control indicator goes off as soon as the self-cleaning operation is complete.

Diesel particle filter ⇨ 144.

[1)] **EPS** = **E**lectric **P**ower **S**teering.

Seat occupancy recognition ❊
⇨ 67, ⇨ 72.

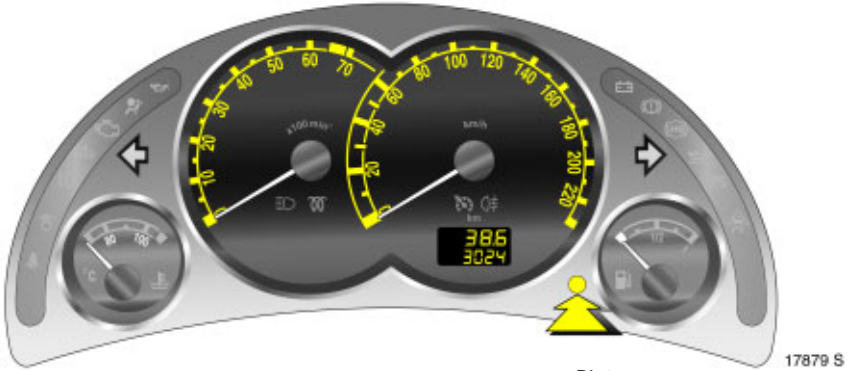

Picture no:

Instrument display

In some versions, the indicators of the instruments briefly rotate to the end position when the ignition is switched on.

Tachometer
Displays the engine rpm.

Drive in a low engine speed range for each gear as much as possible.

Caution
If the pointer is in the warning zone, the maximum permitted engine speed is exceeded. Engine at risk.

Speedometer
Speed display.

Kilometre display
If the ignition is off the mileage is displayed for approx. 15 seconds by briefly pressing the reset knob.

Top line:
Trip odometer

Displays the number of kilometres since the gauge was reset.

To reset, hold the reset knob depressed for a few seconds with the ignition on.

Bottom line:
Odometer

Records the number of kilometres.

Maintenance, Inspection system, ⇨ 89, ⇨ 208.

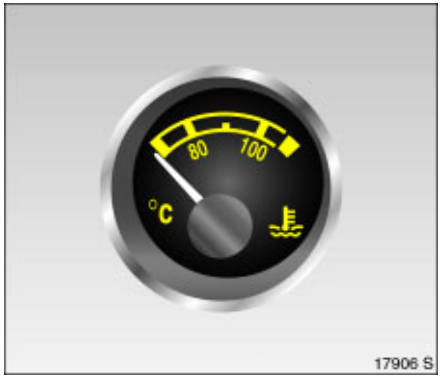

Coolant temperature display
Coolant temperature display

Pointer in zone at left	=	Engine operating temperature not yet reached.
Pointer between the zones	=	Normal operating temperature.
Pointer in zone at right (warning zone)	=	Temperature too high: Stop vehicle and switch off engine. Danger to engine. Check coolant level immediately ⇨ 213.

For physical reasons, the engine temperature gauge shows the coolant temperature only if the coolant level is adequate.

During operation the system is pressurised. The temperature may therefore rise briefly to over 100 □C.

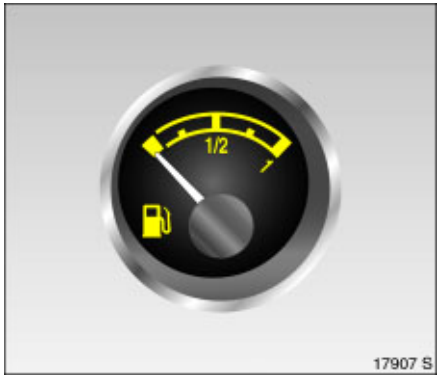

Fuel gauge
Fuel tank level display.

If the fuel level is too low, a warning lamp lights up ⛽. When the light flashes, refuel as soon as possible.

Never run the tank dry!

Because of the fuel remaining in the tank, the amount of fuel required to fill the tank may be less than the specified tank capacity.

Service Display ✻
When the **InSP** indicator in the odometer display comes on, make a service appointment with a workshop as soon as possible.

Maintenance, Inspection system, ⇨ 208.

Transmission display ✻
Display of current gear or mode with manual transmission automated ✻.

R Reverse gear.

N Neutral.

A Manual transmission automated automatic mode.

1-5 Manual mode, current gear in manual transmission automated.

Automated manual transmission ✻ ⇨ 129.

Information display

Triple information display ✻

Display of time, outside temperature and date/infotainment system (when it is on).

When the ignition is off, the time, date and outside temperature can be shown by briefly pressing one of the two buttons next to the display.

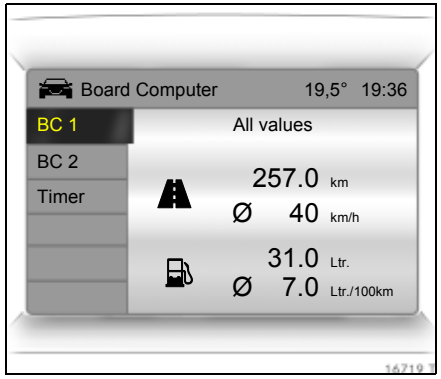

Graphical information display ✻, Colour information display ✻

Display of time, outside temperature and date/infotainment system (when it is on).

The colour information display presents the information in colour.

The type of information and how it is displayed depend on the equipment of the vehicle and the settings made.

Some information appears in the display in an abbreviated form.

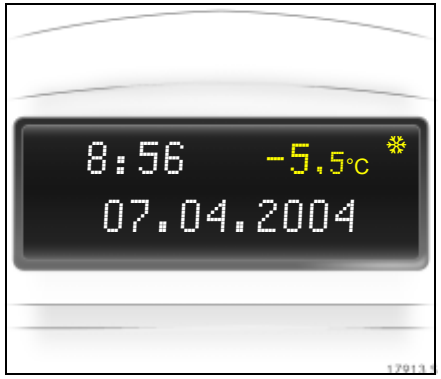

Outside temperature

A fall in temperature is indicated immediately and a rise in temperature after a time delay.

If outside temperature drops below 3 □C, the symbol ❄ appears in the triple information display as a warning for icy road conditions. When temperature increases to at least 5 □C, the ❄ symbol goes out.

In vehicles with graphical information display ❄ or colour information display ❄, a warning message **Slippery road** appears on the display as a warning for icy road surfaces. There is no message below -5 □C.

⚠Warning

Caution: The road surface may already be icy even though the display indicates a few degrees above 0 □C.

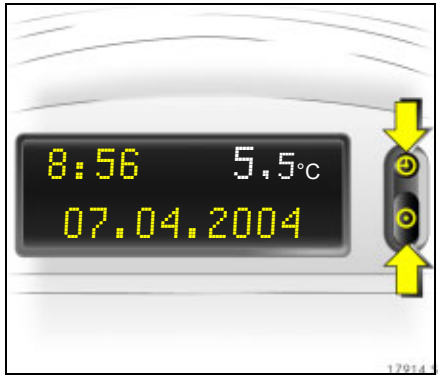

Triple information display

Set date and time

The infotainment system ✻ must be off. Activate setting mode by holding the button depressed for about 2 seconds. The flashing value is adjusted using the button. The button is used to switch to the next unit and to exit setting mode.

Automatic time synchronisation ✻

The RDS signal of most VHF transmitters automatically sets the time. This can be identified by in the display.

Some transmitters do not send a correct time signal. In such cases, we recommend that you switch off automatic time synchronisation.

Activate setting mode and set it to year setting. Hold the button depressed about 3 seconds until flashes in the display and “RDS TIME" appears. The function is activated (RDS TIME 1) or deactivated (RDS TIME 0) with the button. Exit setting mode using the button.

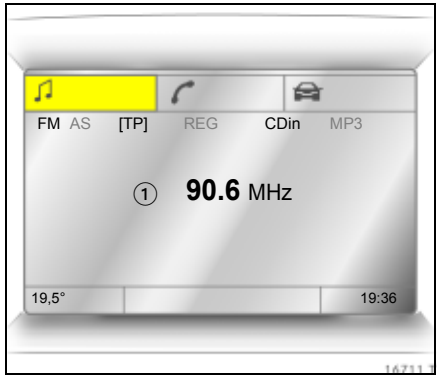

Graphical information display ✻ or colour information display ✻, selecting functions

Functions and their menus are depicted in the graphical information display and colour information display.

These functions are marked or executed in the menu display via the cross switch, the multifunction knob ✻ on the Infotainment System or buttons ✻ on the steering wheel.

To select with four-way button
Select menu items via menus and with the buttons/four-way button of the Infotainment system.

Selection with the multifunction knob ✻
Turn the multifunction button to highlight menu items or commands and to select function areas.

Press the multifunction button to select the highlighted item or confirm a command.

To exit a menu, turn the multifunction button left or right to **Return** or **Main** and select.

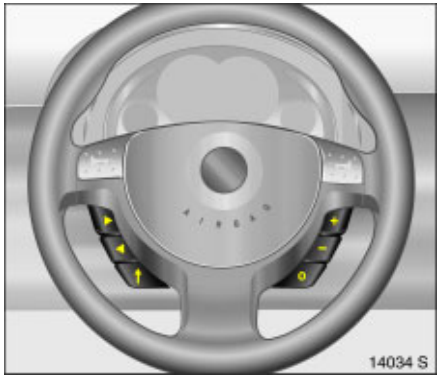

Selection using buttons ✻ on steering wheel
Select menu options via menus and with the buttons.

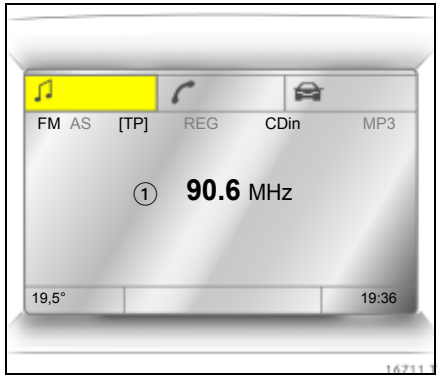

Function areas
For each functional area there is a main page (Main), which is selected at the top edge of the display (not with the Infotainment system CD 30 or the Mobile Phone Portal):

- Audio.
- Navigation ✻.
- Telephone ✻.
- Trip computer ✻.

For Audio, Navigation ✻ and Telephone ✻ functions – see infotainment system instructions.

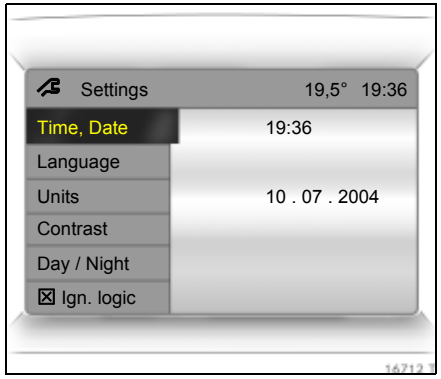

System settings
The settings are accessed via the **Settings** menu.

Press the **Main** button ✻ (not found on all infotainment systems) on the infotainment system (call up main display).

Press the **Settings** button of the infotainment system. On Infotainment System CD 30, make sure no menu has been selected.

The **Settings** menu is displayed.

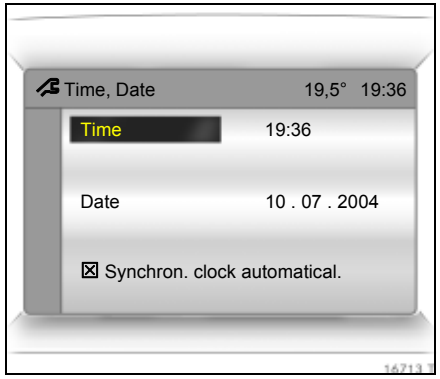

Setting date and time ✻
Select menu item **Time, Date,** from the **Settings** menu.

The menu for **Time, Date** is displayed.

Select the required menu item and make setting.

Automatic time synchronisation ✻
The RDS signal of most VHF transmitters automatically sets the time.

Some transmitters do not send a correct time signal. In such cases, we recommend that you switch off automatic time synchronisation.

On infotainment systems with navigation ✻, time and date are also harmonised upon receipt of a GPS satellite signal.

The function is activated by ticking the field in front of **Synchron. clock automatical.** in the **Time, Date** menu.

Language selection
You can select the display language for some functions.

Select menu item **Language** from the **Settings** menu.

The available languages are displayed.

Select the desired language.

Selections are indicated by a ▶ in front of the menu item.

In systems with language version ✻, when the language setting of the display is changed, the system will ask if the message language should also be changed - see infotainment system instructions.

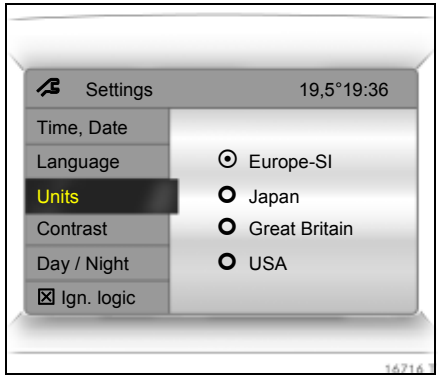

Setting units of measure
Select menu item **Units** from the **Settings** menu.

The available units are displayed.

Select the desired unit.

Selections are indicated by a ● in front of the menu item.

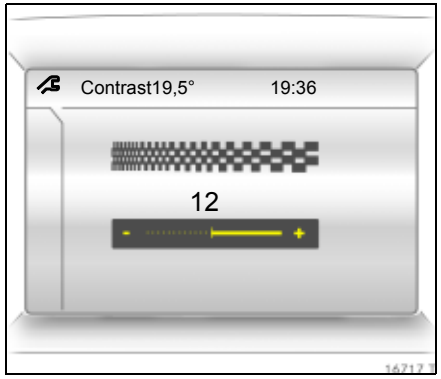

Adjusting contrast ✻ (graphical information display)
Select menu item **Contrast** from the **Settings** menu.

The menu for **Contrast** is displayed.

Confirm the required setting.

Setting display mode ✻
Display brightness is independent of vehicle lighting. Settings are made as follows:

Select menu item **Day / Night** from the **Settings** menu.

The options are displayed.

Automatic: adapted based on vehicle lighting.

Always day design: black or coloured text on light background.

Always night design: white or coloured text on dark background.

Selections are indicated by a ● in front of the menu item.

Ignition logic ✻
Adjustment, see Infotainment system instructions.

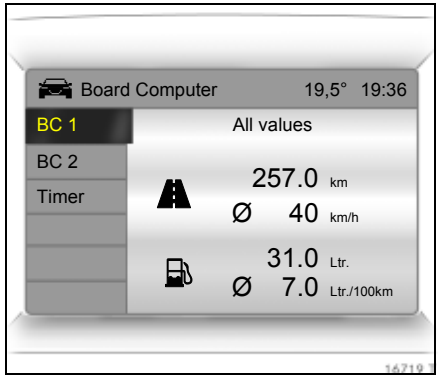

Graphical information display ✻ or Colour information display ✻, Trip computer ✻

The trip computers provide information on driving data, which is continually recorded and evaluated electronically.

The trip computer main page provides information on range, average consumption and momentary consumption ✻.

To display the other trip computer driving information, press **BC** button on Infotainment system ✻ or select trip computer menu on display.

For vehicles with Infotainment System CD 30 ✻ and steering wheel remove control ✻, the left steering wheel buttons only operate the trip computer.

Range
Range is calculated from current fuel tank content and instantaneous consumption. The display shows average values.

After refuelling, the vehicle updates the range automatically after a brief delay.

If the fuel in the tank will allow less than 50 km of travel, the message **Range** appears in the display.

If the fuel in the tank will allow less than 30 km of travel, the message **Please refuel!** ✻ appears in the display.

Acknowledge warning message ⇨ 92.

Instantaneous consumption
Display of current consumption. At low speeds, consumption per hour is displayed.

Distance travelled
Display of distance travelled. The measurement can be reset at any time.

Average speed
Display of average speed. The measurement can be reset at any time.

Stoppages in the journey with the ignition off are not included in the calculations.

Effective consumption
Display of fuel consumed. The measurement can be reset at any time.

Average consumption
Display of average consumption. The measurement can be reset at any time.

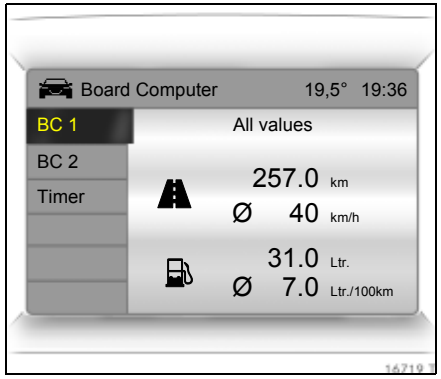

Restart trip computer
The measurement or calculation of the following trip computer information can be restarted:

- Distance,
- Average speed,
- Effective consumption,
- Average consumption.

Select **BC 1** or **BC 2** from the trip computer menu.

The information of the two trip computers can be reset separately, making it possible to evaluate data from different time periods.

Select the required trip computer information and confirm.

The value for the selected function will be reset and recalculated.

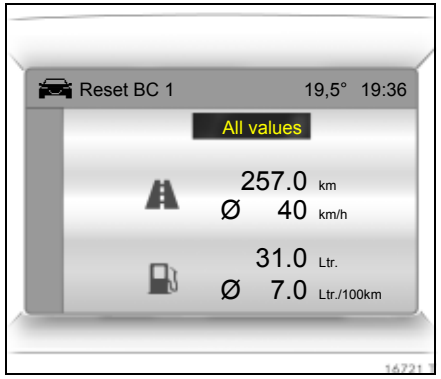

To reset all information of a trip computer, select menu item **All values**.

After resetting, **- - -** is displayed for the selected trip computer information. The recalculated values are displayed after a brief delay.

Interruption of power supply
If the power supply has been interrupted or if the battery voltage has dropped too low, the values stored in the trip computer will be lost.

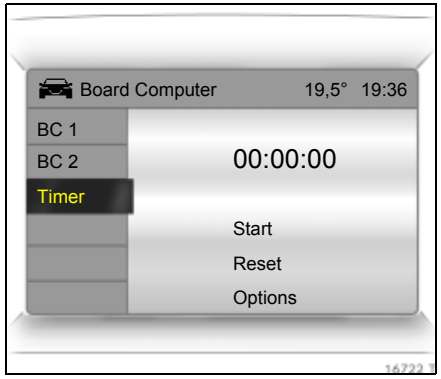

Stop watch
Select menu item **Timer** from the **Board Computer** menu.

The **Timer** menu is displayed.

To start, select menu item **Start**. To stop, select menu item **Stop**.

To reset, select menu item **Reset**.

The desired stop watch display can be selected from the **Options** menu ✻:

Driving Time excl. Stops
The time the vehicle is in motion is recorded. Stationary time is not included.

Driving Time incl. Stops
The time the vehicle is in motion is recorded. The time the vehicle is stationary with the key in the ignition switch is included.

Travel Time
Measurement of the time from manual activation via **Start** to manual deactivation via **Reset**.

Warning buzzers

When starting the engine or whilst driving:

- If seat belt is not fastened ✻.
- If the speed programmed at the factory ✻ is exceeded.
- If the car has automated manual transmission ✻ and the driver's door is opened when the engine is running, a gear is engaged and the foot brake is not depressed.

When the vehicle is parked and the driver's door is opened:

- when the key is in the ignition switch
- with parking lamps or dipped beam on
- if the turn signal stalk is engaged

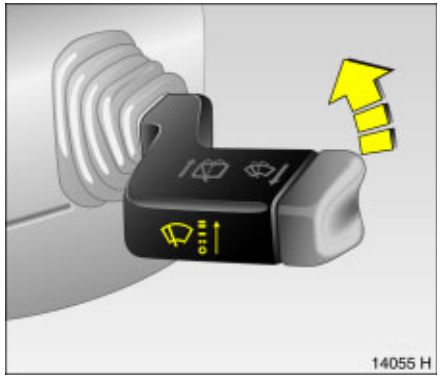

Windscreen wipers

Windscreen wipers

To activate, press stalk briefly up

═	=	Fast
—	=	Slow
– –	=	Adjustable timed interval wipe
O	=	Off

Adjustable wipe interval ✻

Setting wiper interval to a value between 2 and 15 seconds: Stalk to timed interval wipe – –, stalk to O, wait for desired interval, stalk back to timed interval wipe – –.

The selected interval will remain stored until the next time it is changed or until the ignition is switched off.

After turning on the ignition and setting the lever to – –, the interval is set to 7 seconds.

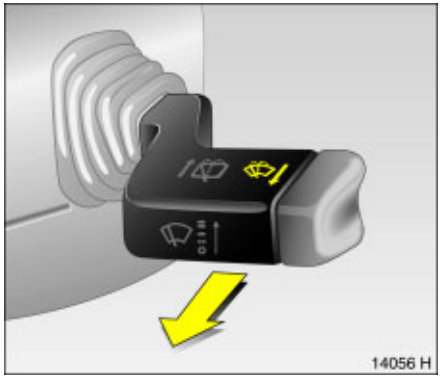

Windscreen washer and headlamp washer system ✻
Pull stalk towards steering wheel. Screen wash is squirted onto the screen and the wipers move back and forth a few times.

When the lights are switched on, windscreen wash is also squirted onto the headlamps.

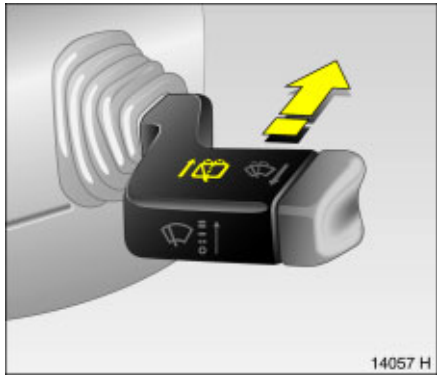

Rear window washer and wiper system
Push stalk forwards. The rear window wiper wipes in timed interval mode. Switch off by pulling stalk towards the steering wheel.

If the stalk is held forwards, washer fluid is sprayed on the rear window.

Lighting

Exterior lights 102
Main beam, headlamp flash 103
Turn signal lamps 103
Fog lamps ✻..... 103
Fog tail lamp 104
Reversing lamps..... 104
Hazard warning lamps 104
Headlamp range adjustment 104
Adaptive Forward Lighting ✻ (AFL) .. 106
Lead-me lighting ✻ 107
Instrument illumination ,
Information display illumination..... 108
Courtesy lamp..... 108
Battery discharge protection ✻..... 110
Misted light covers..... 110
Headlamps when driving abroad 110

Exterior lights

Turn light switch:

0 = Off
= Parking lamps
= Dipped or main beam

In positions and , the tail lamps and number plate lamps are also on.

If the ignition is switched off when main beam or dipped beam is on, the parking lamps come on.

Model with daytime running lights ✻
With ignition on and lights turned on **0**, the dipped headlamps are on without instrument illumination.

The daytime running lights switch off when the ignition is switched off.

Follow the regulations of the country in which you are driving when using daytime running lights and fog lamps ✻.

Driving abroad ➪ 110.

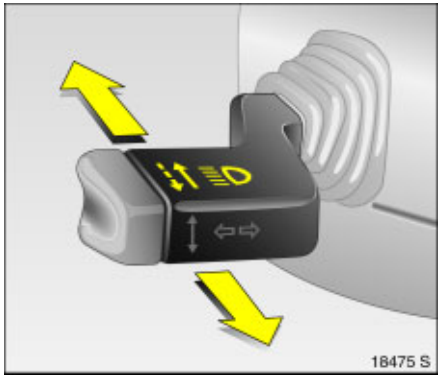

Main beam, headlamp flash

Push stalk forward to switch from dipped beam to main beam.

To switch to dipped beam, press stalk forwards again.

To operate the headlamp flash, pull stalk towards steering wheel. The main beam is switched on for as long as the stalk is held in this position.

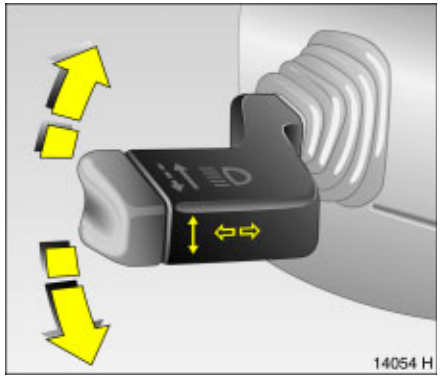

Turn signal lamps

Lever upwards	=	Right turn signal
Lever downwards	=	Left turn signal

If the stalk is moved past the resistance point, the turn signal lamp remains on. When the steering wheel moves back toward the straight-ahead position, the turn signal lamp is automatically deactivated.

Brief flash: press stalk to perceptible resistance and release.

Manual disconnection of turn signal lamps by returning to centre position.

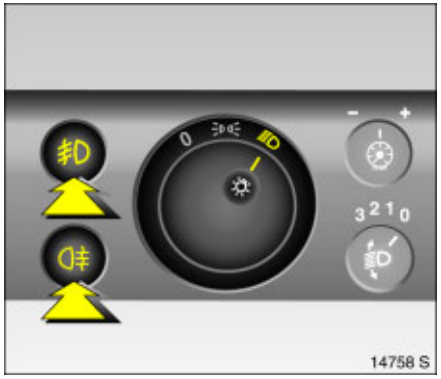

Fog lamps ✻

The fog lamps can only be switched on when both the ignition and lights are on.

Operated with the button.

Fog tail lamp

The fog tail lamp can only be switched on both the ignition and dipped beam/parking lamps are on.

Operated with the button.

The fog tail lamps on the vehicle are deactivated when towing a caravan/ trailer.

Reversing lamps

The reversing lamps come on when the ignition is on and reverse gear is engaged.

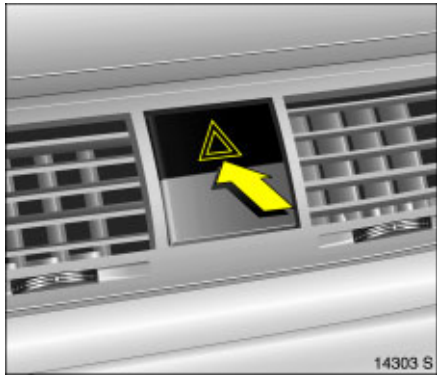

Hazard warning lamps

Operated with the button.

To aid location of the pushbutton, the red surface is illuminated when the ignition switched on. When the button is pressed, its control indicator flashes in time with the hazard warning lamps.

Headlamp range adjustment

Manual headlamp range adjustment

To adapt headlamp range to the vehicle load so that fellow motorists are not blinded: Press knob to disengage and turn to required position.

Settings.

0	=	Front seats occupied
1	=	All seats occupied
2	=	All seats occupied and luggage compartment load
3	=	Driver's seat occupied and luggage compartment load

Automatic headlamp range adjustment ✻

On vehicles with Xenon headlamps, headlamp range is adjusted automatically based on vehicle load.

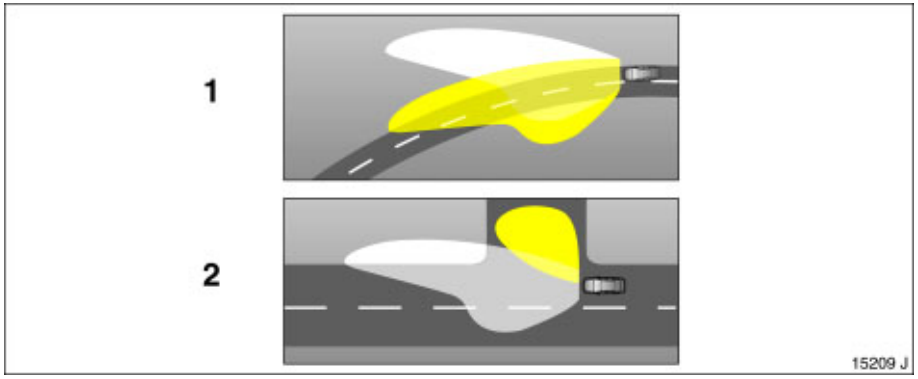

Adaptive Forward Lighting ✻ (AFL)

ensures better illumination of

- bends (curve lighting),
- crossings and narrow bends (cornering light).

Curve lighting
The light beam pivots based on steering wheel position and speed (from approx. 10 km/h).

The headlamps shine at an angle of up to 15□ to the right or left of the direction of travel.

Cornering light
An additional lamp comes on with certain steering wheel positions (after approx. 90□), turn signal settings and speeds (up to approx. 40 km/h).

The light is thrown approx. 90□ to the left or right of the car, to a distance of approx. 30 metres.

Reversing function
If the lights are on, reverse gear is engaged, and the turn signal is activated, the cornering light on the appropriate side is switched on. The cornering light stays on for 15 seconds once the turn signal has been switched off.

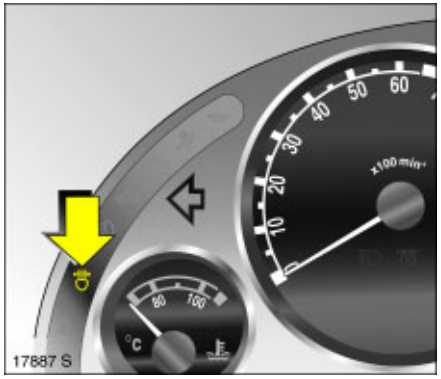

Control indicator for adaptive driving lights
Illuminated: Fault in system. The system is not ready for operation.

Contact a workshop for assistance.

After a power supply interruption the steering angle sensor must be calibrated to make the system operational. ⇨ 147

Control indicator flashes for about 4 seconds after the ignition is switched on as a reminder that the headlamps have been converted, see "Headlamps for driving abroad" ⇨ 110.

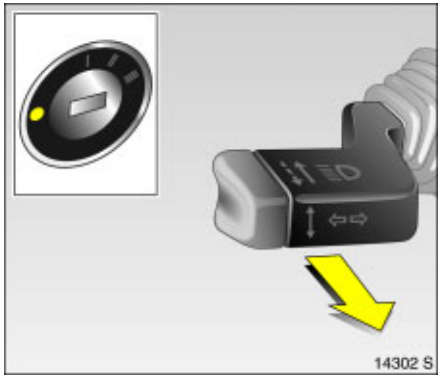

Lead-me lighting ✻

Lead-me lighting when leaving the vehicle ✻

The dipped headlamps come on for around 30 seconds after switching on and closing the driver's door.

To activate:

1. Switch off ignition.
2. Remove ignition key.
3. Open driver's door.
4. Pull turn signal stalk toward steering wheel.
5. Close driver's door.

If the driver's door is left open, the lamps will go out after two minutes.

The light is switched off immediately by inserting the key into the ignition or pulling the turn signal stalk towards the steering wheel again.

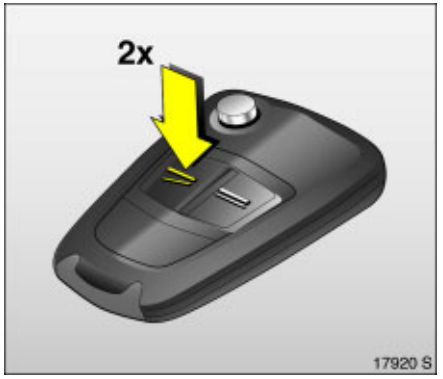

Lead-me lighting when opening the vehicle ✻

The Lead-me-to-the-car lighting function allows the dipped headlamps to be lit for around 30 seconds using the remote control.

This function must be activated (once): Unlock the vehicle, put the key in the ignition and press the light switch for approx. 5 seconds - see next page, Fig. 14136 S.

To deactivate the function permanently, contact a workshop.

To activate the lead-me-to-the-car light function, press button ≃ on the remote control twice with the vehicle locked.

Country-specific version ✻: to enable the lead-me-to-the-car function, press button ≃ on the remote control once with the vehicle locked.

The lead-me-to-the-car light function is deactivated immediately by pressing button ⚌ of the remote control or switching on the ignition.

Instrument illumination ⌚, Information display illumination

Lights come on when ignition is switched on.

Brightness can be adjusted when the exterior lights are on: Push to release knob ⌚ and then turn it clockwise or anticlockwise and hold until the desired brightness is obtained.

Display mode ✻ ⇨ 96.

Courtesy lamp

Automatic interior light

Comes on automatically when the vehicle is unlocked with the radio remote control or when a door is opened.

Goes off automatically after a delay when the doors are closed or immediately when the ignition is switched on or the doors are locked.

Front courtesy lamp

To operate manually from inside when the doors are closed:

on = Press light switch ☼

off = Press light switch ☼ again

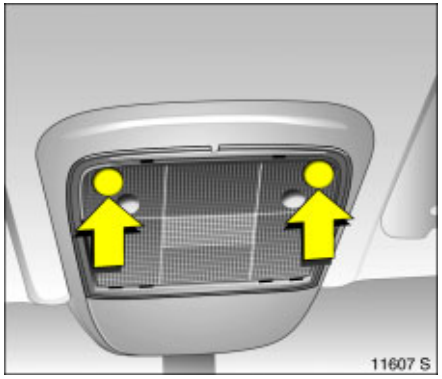

Front reading lamps ✻
Operate using buttons with the ignition switched on.

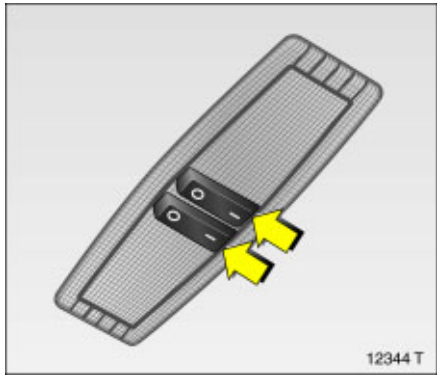

Courtesy lamps and rear reading lamps ✻
Centre switch position: The rear courtesy lamp comes on together with the front one when a door is opened.

The rear reading lamps on the left and right can be switched on separately. With ignition on:

On = Switch position I
Off = Switch position 0

Entry lighting ✻
After unlocking the vehicle, the instrument and switch illumination plus the courtesy lamps come on for a few seconds.

Illuminated mirror in the sun visors ✻
The lighting switches on when the cover is opened.

Glove compartment lighting ✻
The glove compartment light comes on when the ignition is on and the lid is opened.

Luggage compartment lighting ✻
The luggage compartment light comes on when the tailgate is open.

Automatically regulated centre console lighting ✻
Spotlight in housing of interior mirror.

Daylight-dependent, automatically regulated centre console lighting with ignition switched on.

Battery discharge protection ✻

Some consumers such as the interior lighting switch themselves off after approx. 30 minutes if the ignition is off in order to protect the battery charge.

Misted light covers

The inside of the light covers may mist up briefly in poor, wet and cold weather conditions, in heavy rain or after washing. The mist disappears quickly by itself; to help, switch on the lights.

Headlamps when driving abroad

The asymmetrical dipped beam increases the field of vision on the passenger side of the lane.

In countries where traffic drives on the opposite side of the road, prevent glare as follows.

Vehicles with halogen headlamp system or Xenon headlamp system ✻
Have headlights converted in a workshop.

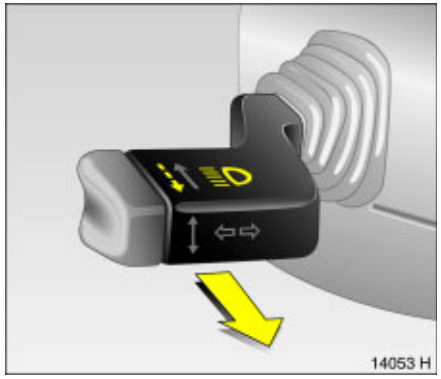

Vehicles with Adaptive headlight ✻ (AFL)

1. Pull stalk towards steering wheel and hold.
2. Switch on ignition.
3. After approx. 3 seconds, an acoustic signal sounds and then AFL control indicator flashes approx. 4 seconds.

After the switch, AFL control indicator flashes for 4 seconds each time the ignition is switched on.

To return to asymmetrical dipped beam, pull and hold the main beam stalk again, switch on the ignition and wait for the acoustic signal. AFL control indicator will then discontinue flashing.

Control indicator ⇨ 106.

Infotainment system

Radio reception ✻..... 111
Infotainment system ✻..... 111
Steering wheel remote control ✻..... 111
Rear seat audio system ✻..... 112
AUX input ✻..... 112
Electronic data acquisition in toll systems 112
Mobile telephones and radio equipment ✻..... 113

Radio reception ✻

Radio reception may be disrupted by static, noise, distortion or loss of reception due to

- changes in distance from the transmitter,
- multi-path reception due to reflection and,
- shadowing.

Infotainment system ✻

The infotainment system is operated as described in the operating instructions.

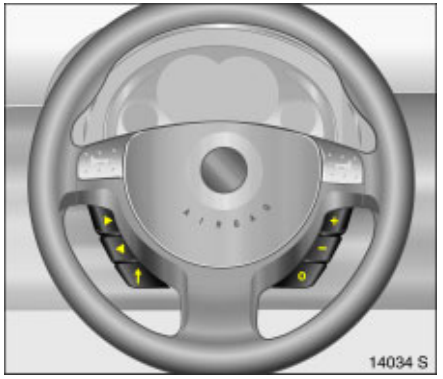

Steering wheel remote control ✻

The functions of the infotainment system ✻ and the information display can be operated with the buttons on the steering wheel.

Further information ⇨ 93 and the infotainment system instructions.

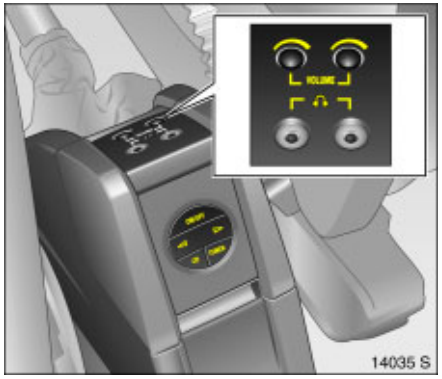

Rear seat audio system ✻

Twin Audio allows rear seat occupants the choice between the audio source played on the infotainment system or a different audio source. Only an audio source that is not currently active on the infotainment system can be controlled.

Two headphone connections are available, with separate volume controls.

Further information in the infotainment system instructions.

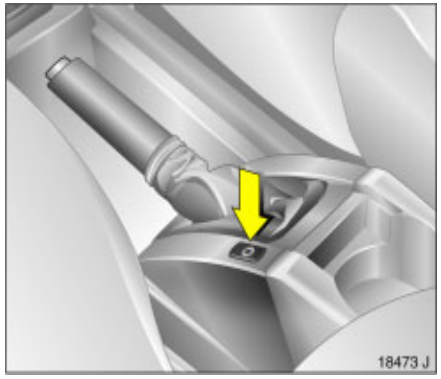

AUX input ✻

The AUX input is next to the handbrake in the centre console.

An external audio source, e.g. a portable CD player, can be connected to the AUX input via a 3.5 mm jack plug.

Keep AUX input clean and dry at all times.

Further information in the infotainment system instructions.

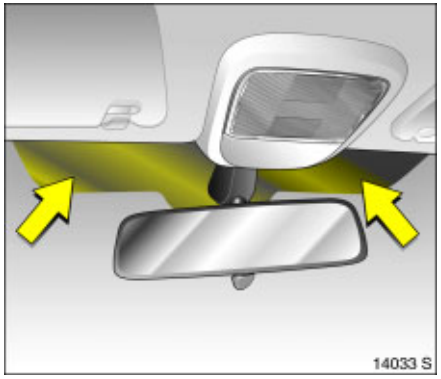

Electronic data acquisition in toll systems

In vehicles with heat-reflecting windscreen[1] ✻ Attach chipcard ✻ for electronic data acquisition and fee payment in black area of windscreen on left or right-hand side behind the interior mirror, see markings in figure. Attaching the chipcard outside this area may cause data acquisition malfunctions.

[1] Solar Reflect.

Mobile telephones and radio equipment ✻

The Opel installation instructions and the operating guidelines provided by the telephone manufacturer must be followed when fitting and operating a mobile telephone. Failure to do so could invalidate the vehicle's operating permit (EU Directive 95/54/EG).

Recommended prerequisites for fault-free operation:

- Professionally installed exterior antenna to obtain the maximum range possible
- Maximum transmission power 10 Watt
- Installation of the telephone in a suitable spot (see information ⇨ 74)

Seek advice on predetermined installation points for the external antenna or equipment holder and ways of using devices with a transmission power exceeding 10 watts.

We recommend you contact your Opel Service Partner who will have brackets and various different accessory kits available and can fit them correctly.

Use of a handsfree attachment without external antenna with mobile telephone standards GSM 900/1800/1900 and UMTS is only permitted if the maximum transmission power of the mobile telephone is 2 watts for GSM 900 or 1 watt for the other types.

For reasons of safety, we recommend that you do not use the phone while driving. Even use of a handsfree set can be a distraction while driving. Be sure to observe any country-specific regulations.

⚠Warning

Mobile phones that do not comply with the above-mentioned mobile phone standard and radio equipment must only be operated using an antenna that is attached to the exterior of the vehicle.

Caution

Mobile phones and radio equipment may cause malfunctions in the vehicle electronics if they are operated in the vehicle without the external antenna unless the above-mentioned regulations are complied with.

Climate control

Heating and ventilation system, air conditioning system ✻ 114
Electronic climate control system ✻ ... 114
Air vents 115
Heating and ventilation system 116
Air conditioning system ✻ 119
Electronic climate control system ✻ ... 122
Auxiliary heater 127
Air intake 127
Air outlet 127
Pollen filter 127
Regular operation 128

Heating and ventilation system, air conditioning system ✻

Ventilation, heating and cooling ✻ are combined into one unit that is designed to provide comfort regardless of the season, weather or outside temperature.

When cooling ✻ is activated, the air is cooled and dried.

The heating unit heats the air as required in all operating modes depending on the position of the temperature switch. The air supply can be adjusted to suit requirements by means of the fan.

The buttons for cooling ✻ and air recirculation are only found on versions with optional air conditioning system ✻.

Air conditioning system ✻ ➪ 119.

Electronic climate control system ✻

Offers the greatest comfort in the vehicle interior regardless of the conditions outside.

To ensure a uniform and comfortable climate in the vehicle, the temperature of inflowing air, air-flow rate and air distribution are automatically adapted based on the climate conditions outside the vehicle and the current temperature of the vehicle interior.

Electronic climate control system ✻ ➪ 122.

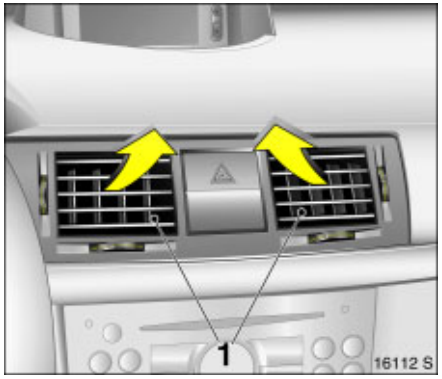

Air vents

At least one air vent must be open while cooling ❄ (air conditioning compressor) is on in order to prevent the evaporator from icing up due to lack of air movement.

Pleasant ventilation to the head area controlled by the position of the temperature switch.

To increase the air supply, set the fan to a higher speed and set the air distribution switch to ⇄ or ⇄.

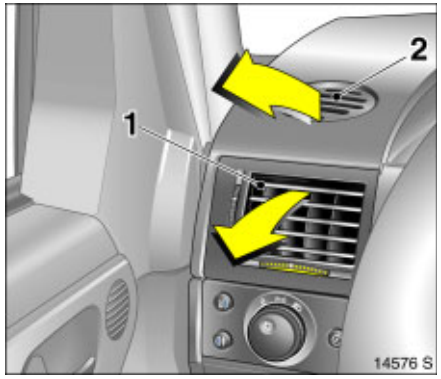

Centre and side (1) air vents
To open vent: rotate wheel upwards.

Adjust the direction of air flow by rotating the horizontal and vertical wheels.

To close the vents rotate the wheel fully downwards.

Windscreen defroster nozzles (2)
Air distribution switch set to ⊠ or ⇄: Air is directed onto the windscreen and door windows.

Additional vents
are beneath the windscreen and side windows and in the front footwell.

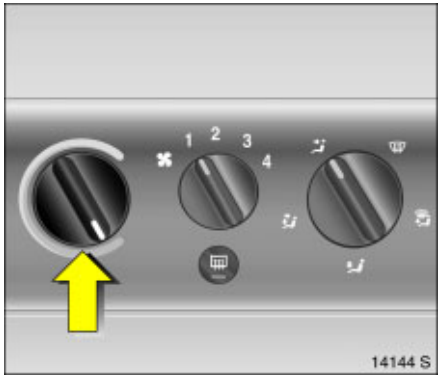

Heating and ventilation system

Temperature
Adjusted using left-hand rotary switch.

red area = warm
blue area = cold

The amount of heat is dependent on the coolant temperature and is thus not fully attained until the engine is warm.

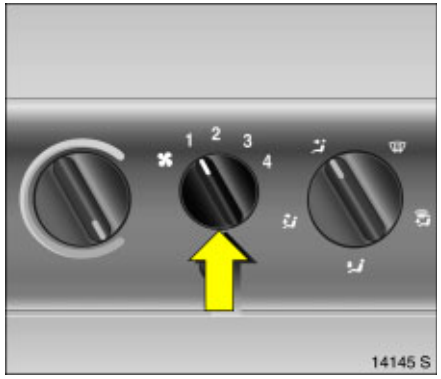

Air flow
Adjusted using centre rotary switch.

✤	off
1-4	selected fan speed

The rate of air flow is determined by the fan. The fan should therefore also be switched on during a journey.

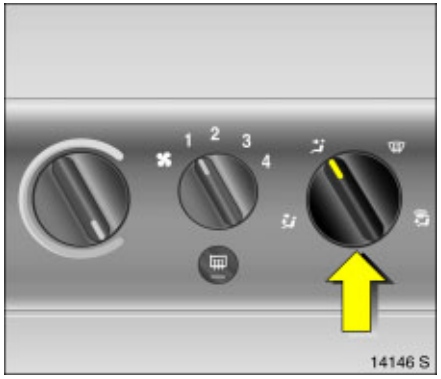

Air distribution
Set using right rotary switch.

- to windscreen and front side windows
- towards windscreen, front door windows and footwell
- to footwell
- towards head area and footwell
- towards head area

Open the air vents when the switch is set to or .

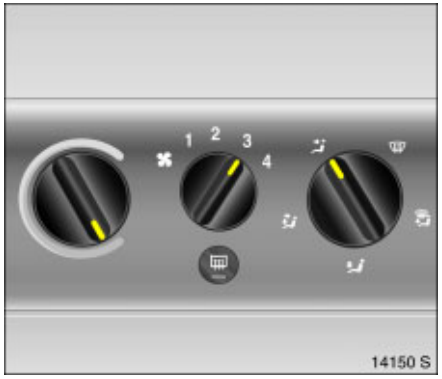

Ventilation

- Set the temperature to the desired setting.
- Switch fan on, select fan setting according to requirements.
- For maximum ventilation in head area: set air distribution switch to and open all vents.
- For ventilation to foot well: Set air distribution switch to
- For simultaneous ventilation to the head area and the foot well: Set air distribution switch to .

Heating

For rapid warming of the passenger compartment:

- Turn the temperature switch clockwise as far as it will go (warm).
- Set the fan to speed **3**.
- Set air distribution switch to desired position, preferably position , ⇨ 116.

The comfort and general well-being of the vehicle occupants are to a large extent dependent on a suitable ventilation and heating setting.

To achieve stratification of temperature with a pleasant "cool head and warm feet" effect, set the rotary air distribution switch to , or , set temperature rotary switch to any position (in centre range with temperature stratification effect).

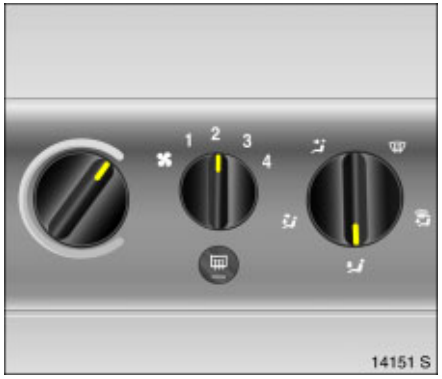

Heating the foot well

- Set the temperature switch in the right-hand zone.
- Switch on fan.
- Set air distribution switch to .

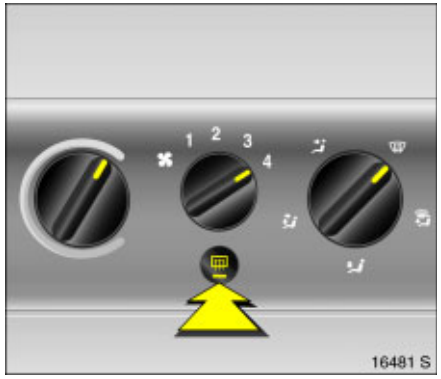

Demisting and defrosting windows

⚠Warning

Disregard of the instructions could lead to misting or icing of the windows and subsequent accidents due to impaired visibility.

Misted or icy windows, e. g. due to damp weather, damp clothing or low outside temperatures:

- Turn the temperature switch clockwise as far as it will go (warm).
- Set fan to **3** or **4**.
- Set air distribution switch to .
- Switch on heated rear window .
- Open side air vents as required and direct them towards door windows.
- For simultaneous footwell heating, set air distribution switch to .

Air conditioning system ❄

As a supplement to the heating and ventilation system, the air conditioning system cools and dehumidifies (dries) inflowing air.

If cooling or dehumidification is not desired, switch off cooling in order to save fuel.

Cooling switches off automatically at low outside temperatures.

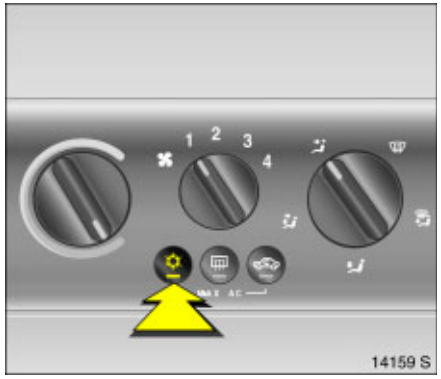

Cooling
Only operate with the engine and fan running. Activate and deactivate with the button.

When cooling is active (AC compressor) the air is cooled and dehumidified. If cooling or dehumidification is not desired, switch off cooling in order to save fuel.

Cooling switches off automatically at low outside temperatures.

When cooling operates, condensation forms and drips from the underside of the vehicle.

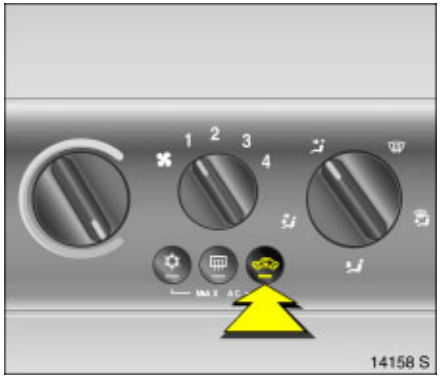

Air recirculation system
The air recirculation mode of the ventilation system is activated and deactivated by pressing the button.

If fumes or unpleasant odours penetrate from outside: Temporarily switch on air recirculation system .

To increase cooling at high outside temperatures, switch on the air recirculation system briefly.

⚠Warning

The air recirculation system minimises the entry of outside air. The humidity increases, and the windows can mist up. The quality of the passenger compartment air deteriorates which may cause the vehicle occupants to feel drowsy.

Air distribution to : the air recirculation system is automatically switched off to speed up window demisting and prevent fogging.

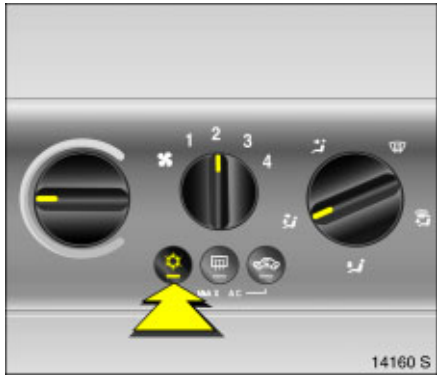

Comfort setting

- Set cooling as desired.
- Air recirculation system off.
- Set temperature switch as desired.
- Switch on fan at desired speed.
- Set air distribution switch to or .
- Open or adjust vents as required.

Temperature switch in centre of adjustment range: warmer air will flow into the foot well and cooler air into the upper zone, with warmer air coming from the side air vents and cooler air from the centre vents.

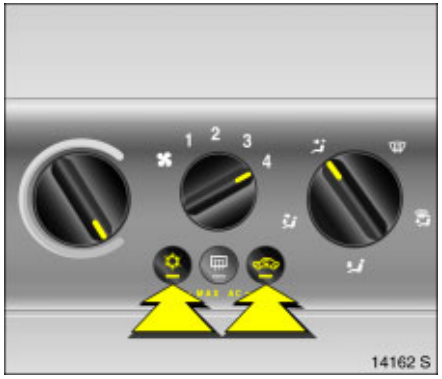

Maximum cooling
Briefly open windows, sun roof and tilting roof so that warm air can escape quickly.

- Cooling on
- Air recirculation system on
- Turn the temperature switch anticlockwise as far as it will go (cold)
- Set fan to **4**
- Set air distribution switch to
- Open all air vents

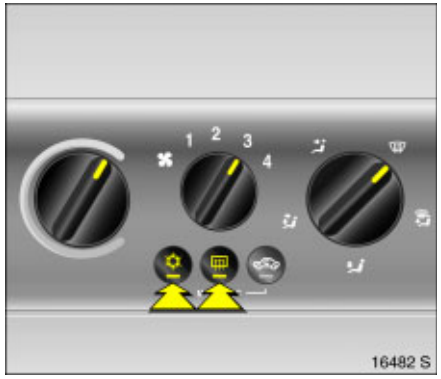

Demisting and defrosting windows

⚠Warning

Disregard of the instructions could lead to misting or icing of the windows and subsequent accidents due to impaired visibility.

Misted or icy windows, e. g. due to damp weather, damp clothing or low outside temperatures:

- Cooling on, the air conditioning compressor automatically switches itself off at low outside temperatures (icing).
- Turn the temperature switch clockwise.
- Set fan to **3** or **4**.
- Air distribution switch to , air recirculation system automatically switches off,

  – or –

  if there is still moisture in the system after previous air conditioning operation, the windows may mist up. To prevent this, set air distribution to before starting engine and set to approx. 5 seconds after starting.
- Activate heated rear window .
- Open side air vents as required and direct them towards the side windows.

Electronic climate control system ❇

Provides a the greatest amount of comfort in the interior regardless of the weather, outside temperature or season.

To ensure a constant and comfortable climate in the vehicle, the temperature of the inflowing air, the air-flow rate and the air distribution are changed automatically according to climatic conditions outside the vehicle.

The climate is regulated automatically based on personal settings.

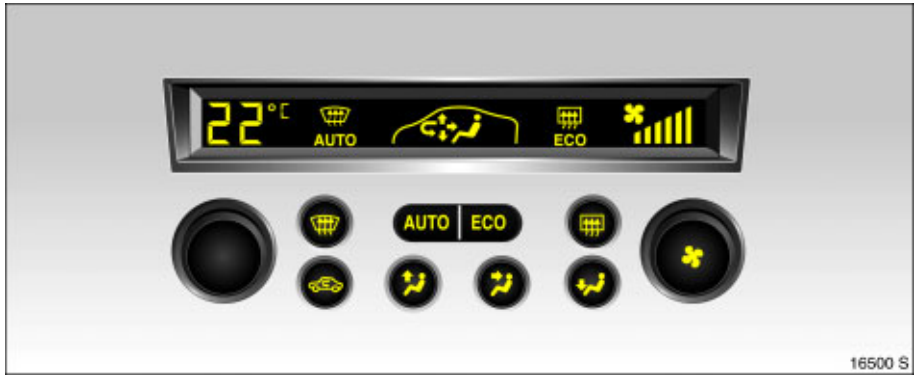

Temperature changes due to external influences, such as direct sunlight, are automatically compensated.

When cooling (air conditioning compressor) is active, air is cooled and dehumidified.

The pollen filter removes dust, soot, pollen and spores from the inflowing outside air.

When set to automatic mode, the climate control system provides the optimal settings for almost all conditions. If necessary, climate control system settings can be modified manually.

The climate control system is only operational when the engine is running.

If you wish the climate control system ❇ to operate correctly, do not cover the sensor on the instrument panel.

Cooling (air conditioning compressor) switches off automatically at low outside temperatures.

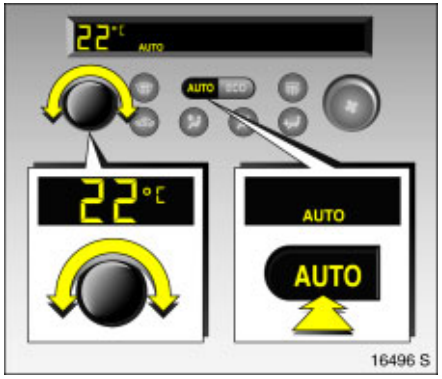

Automatic mode
Basic setting for maximum comfort:

- Press **AUTO** button.
- Open all air vents.
- Switch on AC compressor ➪ 125.
- Preset temperature to 22 ☐C with turn knob.

The temperature can be set higher or lower as desired.

Switching off the air conditioning compressor (**ECO** appears in display) can have a detrimental effect on comfort and safety ➪ 125.

All air vents are actuated automatically in automatic mode. The air vents should therefore always be open ➪ 115.

Temperature preset
The left rotary knob can be used to set the temperature to values of between 16 ☐C and 28 ☐C.

For the sake of comfort, only change the pre-selected temperature in small steps.

If the temperature setting is less than 16 ☐C, **LO** appears in the air conditioning display: the climate control system runs constantly at maximum cooling power, and the temperature is not regulated.

If the temperature setting is above 28 ☐C, **HI** appears in the air conditioning display: the climate control system runs constantly at maximum heating power, and the temperature is not regulated.

The temperature settings remain stored when the ignition is turned off.

Manual settings
Under certain circumstances (e.g. iced or misted windows), the functions of the climate control system can be modified manually.

Manual settings are saved when the ignition is switched off.

Make manual settings as follows when necessary:

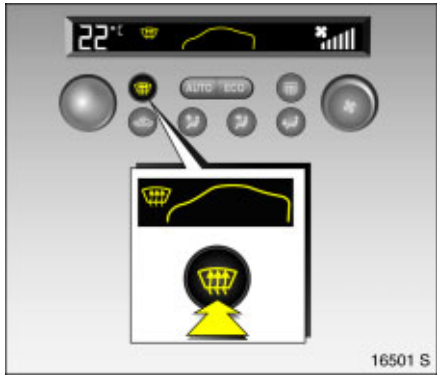

Window demisting and defrosting

⚠Warning
Disregard of the instructions could lead to misting or icing of the windows and subsequent accidents due to impaired visibility.

Misted or icy windows, e. g. due to damp weather, damp clothing or low outside temperatures:

Press button , appears in the air conditioning display.

Temperature, air distribution and blower are set automatically.

To return to automatic mode: press button or **AUTO**.

Heated rear window ⇨ 41.

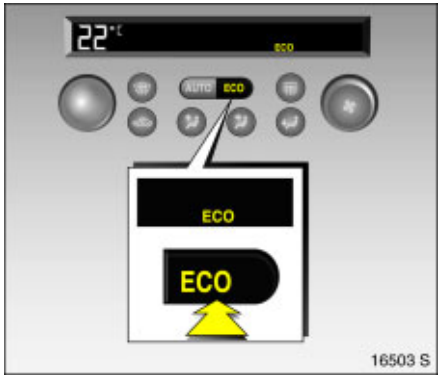

Activating and deactivating air conditioning compressor
Press the **ECO** button. **ECO** appears in the air conditioning display.

Switch on to save fuel. In this mode cooling (AC compressor) is switched off.

Inflowing air is neither cooled nor dehumidified. This restricts the level of comfort provided by the automatic climate control system. This may cause the windows to mist up, for example.

When cooling operates, condensation forms and drips from the underside of the vehicle.

To return to cooling operation: press **ECO** button. **ECO** goes out.

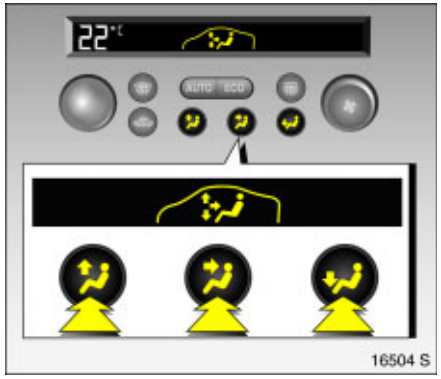

Air distribution
Press one or more of the following buttons. The corresponding symbol appears in the air conditioning display:

- Air distribution towards windscreen and front door windows.
- Air distribution towards vehicle occupants via adjustable vents.
- Air distribution towards footwell.

To return to automatic mode: Press the appropriate buttons again, or press **AUTO**.

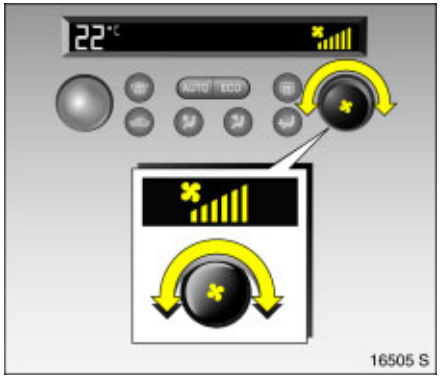

Air flow
Set air flow using the right-hand rotary knob. The selected fan speed is indicated by the number of bars.

To deactivate the fan and thereby the automatic climate control system: Turn the right-hand rotary knob anticlockwise until the display goes out.

Switching on: turn rotary knob clockwise.

To return to automatic mode: Press **AUTO** button.

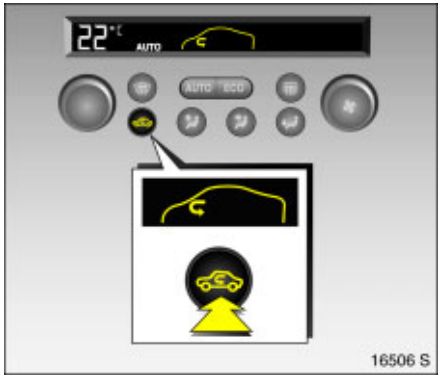

Manual air recirculation mode
The air recirculation system prevents the entry of outside air and the air in the passenger compartment is circulated.

Press button , appears in the air conditioning display.

⚠Warning

The exchange of fresh air is reduced in air circulation mode. The quality of the passenger compartment air deteriorates which may cause the vehicle occupants to feel drowsy. In operation without cooling the air humidity increases, so the windows may mist up. Consequently, the air circulation system should only be run for short periods of time.

To switch off manual air circulation: press button again.

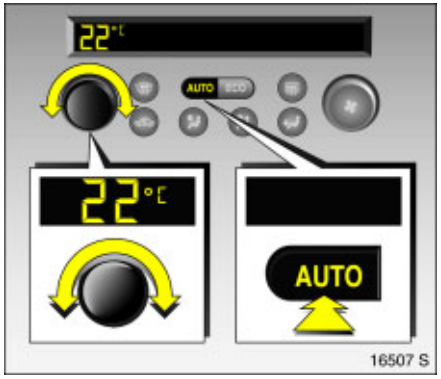

Air conditioning with the engine not running
When the vehicle is stopped and the ignition off, the residual heat or cooling in the system can be used for climate control in passenger compartment, e.g. when stopped at a level crossing.

Press **AUTO** with the ignition off. The preselected temperature appears in the air conditioning display. The temperature can be adjusted with the left-hand rotary knob.

Residual climate control can only operate for a limited period of time. To cancel, press the **AUTO** button.

Auxiliary heater

Depending on outside temperature and engine temperature, the passenger compartment of vehicles with Quickheat ✻ electric auxiliary heating is warmed up more quickly.

Diesel-engined vehicles have a fuel-powered auxiliary heater ✻.

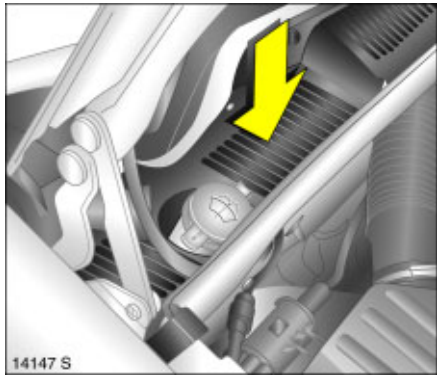

Air intake

The air intakes in front of the windscreen on the far right and left sides of the engine compartment must be kept clear to allow air intake. Remove any leaves, dirt or snow.

Air outlet

Do not cover the air outlets when storing items in the luggage compartment storage compartments.

Pollen filter

The pollen filter cleans dust, soot, pollen and spores from the air entering from outside. The active carbon layer ✻ eliminates most odours and noxious environmental gases from the air.

Regular operation

For consistently good operation, the air cooling system ❄ must be switched on for several minutes once per month regardless of the weather and the time of year. Operation not possible with the cooling system switched on and when the outside temperature is low.

Service

For optimal cooling performance, we recommend that the climate control system be checked annually, starting three years after initial vehicle registration.

- Functionality and pressure test,
- Heating functionality,
- Leakage check,
- Check of drive belts,
- Cleaning of condenser and evaporator drainage,
- Performance check.

Driving and operation

Manual transmission automated ✻ ... 129
Manual transmission 134
Driving hints 135
Saving fuel, protecting the environment 137
Fuels, refuelling 139
Catalytic converter, exhaust gasses .. 142
Drive Control Systems 146
Hydraulic brake system 151
Anti-lock brake system (ABS ⓐⓑⓢ) 152
Hand brake 153
Brake assist 153
Hill Start Assist ✻ (HSA) 153
Wheels, tyres 153
Roof rack ✻ 158
Towing equipment ✻..... 158
Towing equipment with removable coupling ball bar ✻..... 159
Caravan/trailer towing 162

Manual transmission automated ✻

The manual transmission automated transmission ✻ permits manual (**manual mode**) or automatic gear shifting (**automatic mode**), both with automatic clutch control.

Transmission display
Shows the mode and current gear.

If the Winter programme is activated, ❄ is illuminated.

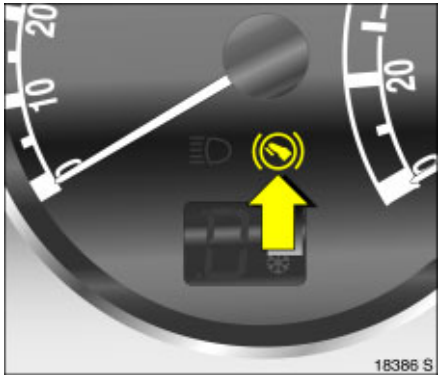

Starting the engine
When starting the engine, activate the footbrake at the same time. The engine can only be started in position **N** and with the footbrake activated. The transmission display shows "N". If the footbrake is not activated, the control light ✻ in the instrument panel illuminates and "N" flashes in the transmission display, the engine cannot be started.

If no brake lights are operational, the engine will not start.

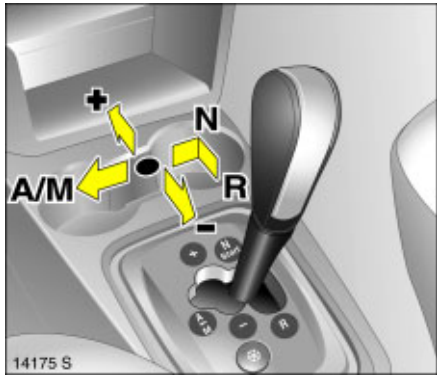

Operation of manual transmission automated using selector lever
Always move the selector lever all the way to the stop. Note the gear or mode indicator in the transmission display.

Move selector lever toward N
Neutral.

Selector lever in ● (centre position)
Once the selector lever has been moved from **N** to position ● (centre position) with the foot brake operated, the Easytronic is in automatic mode and first gear has been selected (second gear with winter programme enabled). "A" appears in the transmission display.

When the foot brake is released the vehicle starts to "creep". If the foot brake is not operated, "A" flashes. Start off by pressing the accelerator immediately or more selector lever back to **N** and repeat procedure with foot brake operated.

In Automatic mode, selection of other gears is automatic irrespective of driving conditions.

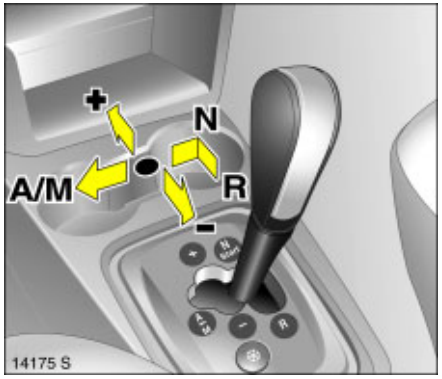

Selector lever in A/M
Switch between Automatic and Manual mode.

In manual mode, gears can be selected manually by moving the selector lever to **+** or **-**. The currect gear is indicated in the transmission display.

If the engine speed is too low the manual transmission automated will automatically shift to a lower gear even in Manual mode. This prevents the engine from stalling.

Selector lever in + or -

+ Shift to a higher gear.

- Shift to a lower gear.

If a higher gear is selected when the running speed is too low, or a lower gear when the speed is too high, the gear selection will not take place. This prevents the engine from running at too low or too high revs.

Gears can be skipped by jogging the selector lever repeatedly at short intervals.

When the vehicle is in automatic mode, the manual transmission automated shifts to manual mode by moving the selector lever to position **+** or **-**. The correct gear is indicated on the transmission display.

Selector lever in R
Reverse gear. Engage only when vehicle is stationary.

Press button on selector lever, select **R**. The transmission display shows "R".

If **R** is selected when the vehicle is in motion, "R" flashes in the transmission display and no gear is engaged.

Stopping the vehicle
In Automatic or Manual mode, when the vehicle has stopped first gear (with Winter mode engaged, second gear) is engaged automatically and the clutch released. In **R** reverse remains engaged.

If a warning signal sounds when the driver's door is opened (foot brake not depressed), move the selector lever to **N** and apply the hand brake.

When stopping on gradients, engage the hand brake or depress the brake pedal. To prevent overheating of the clutch, do not increase engine speed to ensure smooth idling when in gear.

Switch off engine if stopping for a lengthy period, e.g. in traffic jams or at level crossings.

Electronically controlled driving programmes in automatic mode

- Following a cold start, the operating temperature program automatically increases the engine revolutions to bring the catalytic converter to the required temperature.
- The adaptive program automatically selects the gear according to the driving conditions, e.g. increased load and gradients.

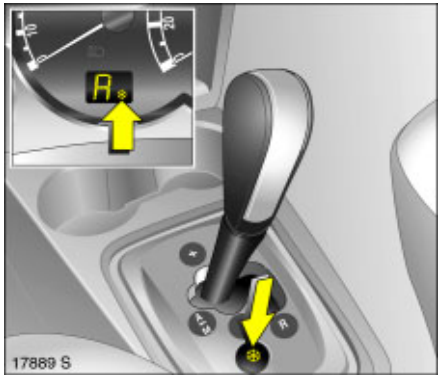

Winter programme ❄
In the event of difficulties starting off on slippery roads, press button ❄ ("A" and ❄ appear on the transmission display). The manual transmission automated switches to automatic mode and the vehicle sets off in second gear.

The Winter programme is switched off by:

- pressing the ❄ button again.
- turning off the ignition.
- switching to Manual mode.
- when clutch temperature is too high.

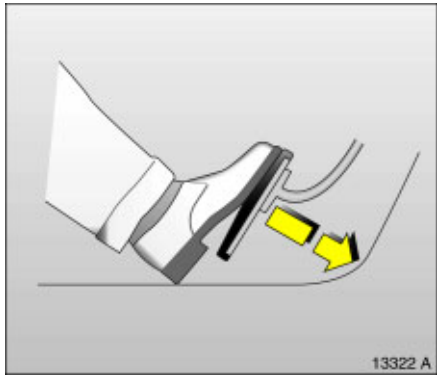

Kickdown
If the accelerator pedal is pressed past the pressure point, the transmission shifts to a lower gear depending on engine speed.

During kickdown no manual gear shifting is possible.

When the engine speed approaches its upper limit, the transmission shifts to a higher gear during kickdown even in Manual mode.

Without kickdown this automatic shift is not effected in Manual mode.

Engine braking
Automatic mode:
When driving downhill, the manual transmission automated does not shift into higher gears until a fairly high engine speed has been reached. When braking, the manual transmission automated shifts down in good time.

Manual mode:
To utilise the engine braking effect, select a lower gear in good time when driving downhill.

"Rocking the car"
The selector lever should only be moved between ● (centre position) and **R** repeatedly if it becomes necessary to rock the vehicle to free it from sand, mud, snow or a hole. Do not race the engine and avoid sudden acceleration.

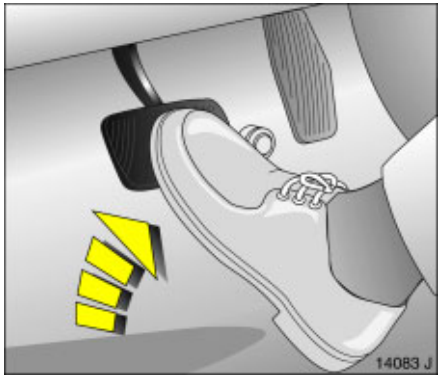

Manoeuvring the vehicle
For accurate manoeuvring when parking, at garage entrances etc., the creeping movement can be utilised by releasing the foot brake with a gear selected.

Never actuate accelerator and brake pedals simultaneously.

To prevent damage, the manual transmission automated deactivates the "creep function" when the temperature of the automatic clutch is extremely high.

Vehicle storage
Apply the handbrake and remove the key from the ignition. The most recently engaged gear (indicator in transmission display) remains engaged. With **N**, no gear is engaged.

When the ignition is switched off the manual transmission automated no longer responds to movement of the selector lever.

If the ignition key is not removed, the battery may be discharged if the vehicle is then left to stand for a lengthy period of time.

If the hand brake has not been applied, the control indicator (!) flashes for a few seconds after the ignition is switched off.

Fault
To prevent damage to the automated manual transmission, the clutch is closed automatically at high clutch temperatures.

Warning light lights up if there is a fault. It is possible to continue driving but manual mode can no longer be used for changing gear.

If "F" also appears in the transmission display, it is not possible to continue driving.

Have cause of fault remedied by a workshop. The system's integrated self diagnostics allow faults to be quickly remedied.

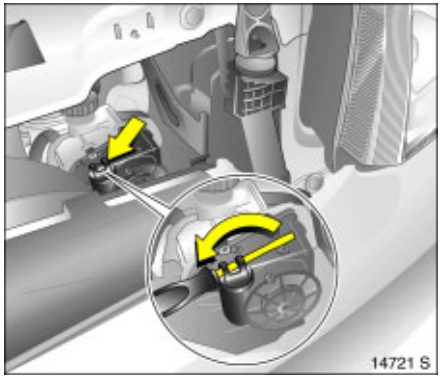

Interruption of power supply
The clutch is not disengaged if there is an interruption of the power supply when a gear is engaged. The vehicle cannot move.

If the battery is flat, start the car using jump leads ⇨ 166.

If the cause is not a flat battery, contact a workshop for assistance. If the vehicle has to be moved out of flowing traffic, disengage clutch.

1. Apply hand brake and switch off ignition.
2. Open bonnet and engage support.
3. Clean transmission around the cap (see Fig.) so that no dirt can get into the opening when the cap is removed.
4. Rotate cap to slacken and remove by lifting upwards – see figure.
5. Turn the adjusting screw clockwise using a flathead screwdriver (vehicle tools ✻ ⇨ 171) until clear resistance can be felt. The clutch has now been disengaged.

Caution
Do not turn beyond the resistance, since this can damage the Easytronic.

6. Fit cleaned cap again. The cap must be in full contact with the housing.

Caution
Towing the vehicle and starting the engine is not permitted when the clutch has been released in this way, although the vehicle can be moved a short distance.

Contact a workshop for assistance immediately.

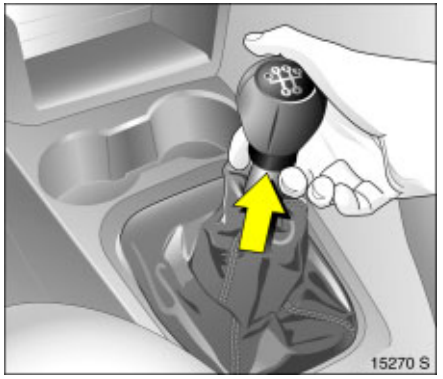

Manual transmission

To engage reverse, with the vehicle stationary wait 3 seconds after declutching and then pull up the button on the selector lever and engage the gear.

If the gear does not engage, set the lever in neutral, release the clutch pedal and depress again; then repeat gear selection.

Do not grind the clutch unnecessarily.

When operating, depress the clutch pedal completely. Do not use the pedal as a foot rest (increases clutch wear).

Driving hints

The first 1000 km
Drive your vehicle at various speeds. Do not use full throttle. Never allow the engine to labour at low revs.

Drive moderately. In all gears, only depress the accelerator pedal around $^3/_4$ of the way down.

Do not drive faster than three quarters of maximum speed.

Do not brake unnecessarily hard for the first 200 km.

During the first drive smoke may develop because of wax and oil evaporating on the exhaust system. Park the vehicle in the open for a while after the first drive and avoid inhaling the fumes.

Fuel and engine oil consumption is higher than normal during the running-in period.

Never coast with engine not running
Many units will not function in this situation (e.g. brake servo unit, power steering ✻). Driving in this manner is a danger to yourself and others.

Brake servo unit
When the engine is not running, the brake servo unit is no longer effective once the brake pedal has been depressed once or twice. Braking effect is not reduced, but significantly greater force is required for braking.

Electric power steering ✻
If the power assisted steering fails when being towed with the engine switched off, the vehicle can still be steered, but considerably more force is required.

Driving in mountainous terrain or with a trailer/caravan
The cooling fan is electrically operated. Its cooling power is therefore independent of the engine speed.

Since a considerable amount of heat is generated at high engine speeds and less at slower speeds, do not shift down when climbing hills whilst the vehicle is still coping with the gradient in the higher gear.

Driving with a roof load
Do not exceed the permissible roof load ⇨ 226. For reasons of safety, distribute the load evenly and secure it properly with retaining straps. Adjust tyre pressure to load conditions. Do not drive faster than 120 km/h. Check and retighten the straps frequently. Observe country-specific regulations.

Switching off the engine
When you switch off, fans in the engine compartment may continue running for a time to cool the engine.

If the engine temperature is very high, e.g. after driving in mountainous terrain: allow the engine to idle for approximately two minutes in order to prevent heat accumulation.

Vehicles with turbocharged engine ✻
After running at high engine speeds or high engine loads, operate the engine briefly at a low load or run in neutral for approx. 30 seconds before switching off in order to protect the turbocharger.

Save energy – more kilometres
Please observe the running-in hints on the previous page and the tips for energy saving on the following pages.

Good, technically correct and economical driving ensures maximum durability and performance for your vehicle.

Overrun cut-off
The fuel supply is automatically cut off during overrun, e.g. when the vehicle is driven with a gear engaged but no throttle application. Overrun cut-off is deactivated if catalytic converter temperature is high.

Vehicles with turbocharged engine ❇
Flow-generated noises may be audible if the accelerator is released quickly on account of air flow in the turbocharger.

Engine speed
Drive in a low engine speed range for each gear as much as possible.

Warming up
Allow the engine to warm up while driving. Do not warm it up by letting it run at idling speed. Do not apply full throttle until the engine has reached operating temperature.

After a cold start, the manual transmission automated ❇ does not switch to higher gears until the speed increases when it is in automatic mode. This allows the catalytic converter to reach the temperature quickly which is required for optimum emission reduction.

Correct gear selection
Do not race your engine whilst in neutral or with a low gear selected. Driving too fast in individual gears as well as stop-and-go traffic increases engine wear and fuel consumption.

Change down
When decreasing speed, shift down into the next lowest gear. Do not slip the clutch with a high-revving engine. This is especially important when hill climbing.

Cooling fan
The cooling fan is controlled via a thermoswitch and therefore only runs if necessary.

The cooling fan automatically switches on when the diesel particle filter is being cleaned ❇ depending on the engine.

Pedals
Do not place any objects in the foot well which could slip under the pedals and inhibit the pedal travel.

To ensure the pedal travel is uninhibited, there must be no mats in the area of the pedals.

Battery care
When driving slowly or when the vehicle is stationary, e.g. in slow urban traffic, stop-and-go traffic or traffic jams, turn off all unnecessary electrical loads where possible (e.g. heated rear window, heated front seats, etc.).

Declutch when starting in order to relieve the strain on the starter and the battery.

Saving fuel, protecting the environment

Trend-setting technology
Environmentally friendly and mainly recyclable materials were used when your vehicle was being developed and manufactured. The production methods used to make your vehicle are also environmentally-compatible.

Recycling of production wastes keeps the circulation of material closed. Reduction of energy and water requirements also helps to conserve natural resources.

A highly advanced design means that your vehicle can be easily disassembled at the end of its working life, and the individual materials separated for subsequent re-use.

Materials such as asbestos and cadmium are not used. The refrigerant in the air conditioning system ❄ is CFC-free.

New painting techniques employ water as a solvent.

End-of-life vehicle recovery
Information on end-of-life vehicle recovery centres and the recycling of end-of-life vehicles is available at www.opel.com.

Energy and environment-conscious driving

- High noise levels and exhaust emissions are often a result of driving without due attention to saving energy and protecting the environment.
- You should therefore drive with energy in mind: "more miles – less fuel".

  Reduce the noise level and exhaust emissions by adopting an environment-conscious driving style. This is extremely worthwhile and improves the quality of life.

  Fuel consumption depends to a great extent on your own personal driving style. The following hints are intended to help you consume fuel at a rate that is as close as possible to the specified levels ⇨ 224.

  Check your vehicle's fuel consumption every time you refuel. This facilitates early detection of any irregularities causing increased fuel consumption.

Warming up

- Full throttle and warming up at idle speed increase wear, fuel consumption, exhaust emission, the amount of pollutant in the exhaust and the amount of noise.
- Drive off immediately after starting. Warm up the engine by running it at moderate engine speeds.

Uniform speed

- Hectic driving significantly increases fuel consumption, the exhaust emissions, the proportion of pollutant in the exhaust gas and the noise level.
- Do not accelerate and brake unnecessarily. Drive at uniform speed, watching the road.

  Avoid frequent starting off and stopping e.g. at traffic lights, in short distance traffic and in queues of traffic by means of clever planning. Select roads with good traffic flow.

Idling

- The engine also consumes fuel when idling.
- If you have to wait for more than one minute, it is worthwhile switching off the engine. Five minutes of idling corresponds to approximately one kilometre of driving.

Overrun

- The fuel supply is shut off automatically on overrun, e.g. when descending steep hills or when braking ⇨ 136.
- To enable the overrun cut-off to come into action and save fuel, do not accelerate or declutch during overrun.

Correct gear selection

- High revs increase engine wear and fuel consumption.
- Do not race your engine. Avoid driving at high engine speeds.

  Making use of the tachometer helps to save fuel. Drive in a low engine speed range for each gear as much as possible with uniform engine speeds. Drive as often as possible in top gear, select the next higher gear as soon as possible, and only change down when the engine is no longer running perfectly smoothly.

High speed

- The higher the speed, the higher the consumption and the noise level. At top speed, you consume a great deal of fuel and produce excessive noise and exhaust emissions.
- Slightly releasing the accelerator pedal results in distinct fuel savings with no major loss of speed.

  Drive at no more than around three quarters of maximum speed and you will use up to 50 % less fuel, without losing a great deal of time.

Tyre pressure

- Inadequate tyre pressure, leading to higher road resistance, costs money in two ways: for more fuel and increased tyre wear.
- Regular checks (every 14 days) pay off.

Electrical loads

- The power consumption of electrical equipment increases fuel consumption.
- Switch off all auxiliary electrical loads (e.g. air conditioning ❇, heated rear window) when not needed.

Roof racks, ski-holders

- Due to air resistance, a roof load can increase fuel consumption by approx. 1l/100 km.
- Remove them if they are not being used.

Repair and maintenance

- Improper repairs or adjustment and maintenance work can increase fuel consumption. Do not carry out work on the engine yourself.

  You may out of ignorance infringe environmental laws by not disposing of materials properly.

  Appropriate parts might not be recycled.

  Contact with some of the materials involved may pose a health hazard.
- We recommend that repair and maintenance be entrusted to your Opel Partner.

Extreme driving conditions

- Going up steep slopes, cornering, driving on poor roads and winter driving all increase fuel consumption.

  Fuel consumption increases dramatically in urban traffic and at winter temperatures, especially on short trips when the engine operating temperature is not reached.
- Follow the hints given above to keep consumption to a minimum under such conditions.

Fuels, refuelling

Fuel consumption

The fuel consumption is determined under specified driving conditions ⇨ 224.

Special equipment increases the weight of the vehicle. As a result, they can increase fuel consumption and reduce the specified maximum speed.

For the first few thousand kilometres, friction between the engine and transmission components is higher. This increases fuel consumption.

Fuel for petrol engines

Only use unleaded fuel that complies with DIN EN 228.

Fuels with ethanol content greater than 5 % may only be used if the vehicle has been specifically developed and approved for these fuels.

Use fuel with the recommended octane rating (value in bold ⇨ 220). Use of fuel with too low an octane rating can reduce engine power and torque and will slightly increase fuel consumption.

Caution
Use of fuel with too low an octane rating could lead to uncontrolled combustion and engine damage.

Fuel for diesel engines

Only use diesel fuel that complies with DIN EN 590. The fuel must have low sulphur content (maximum 50 ppm).

Do not use marine diesel oils, heating oils or entirely or partially plant-based diesel fuels, such as rape seed oil or bio diesel, Aquazole and similar diesel-water emulsions. Diesel fuels must not be diluted with fuels for petrol engines.

The flow and filterability of diesel fuel are temperature-dependent. When temperatures are low, refuel with diesel fuel with guaranteed winter properties.

Fuel filler cap
Only a Opel Genuine fuel filler cap provides full functionality. Diesel-engined vehicles have special fuel filler caps.

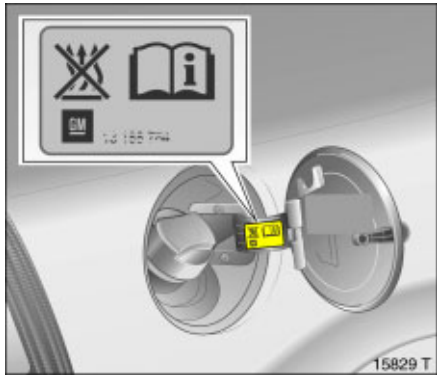

Refuelling

⚠Warning

Before refuelling, switch off engine and any external heaters with combustion chambers ✻ (identified by sticker on tank flap). Switch off any mobile phones.

Follow the operating and safety instructions of the filling station when refueling.

⚠Warning

Fuel is flammable and explosive. No smoking. No naked flames or sparks.

If you can smell fuel in your vehicle, have the cause of this rectified immediately by a workshop.

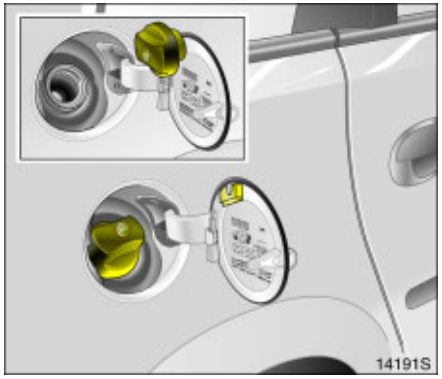

Fuel filler neck at right rear side of vehicle.

The tank flap is locked together with the doors ⇨ 30.

Open tank flap.

Unscrew the fuel filler cap, remove and suspend from the tank flap.

The fuel tank has a limiting system which prevents overfilling of the tank.

Correct filling depends to a large extent on proper operation of the fuel dispensing pump:

1. Fully insert the pump nozzle and switch it on.
2. After automatically switching off, the specified tank capacity is achieved by means of metered refuelling (twice). Insert fuel dispensing pump as far as possible.

To close, place fuel filler cap in position and turn, overcoming the resistance until the ratchet on the cap engages audibly.

Close fuel tank cover.

Caution
Wipe off any overflowing fuel immediately.

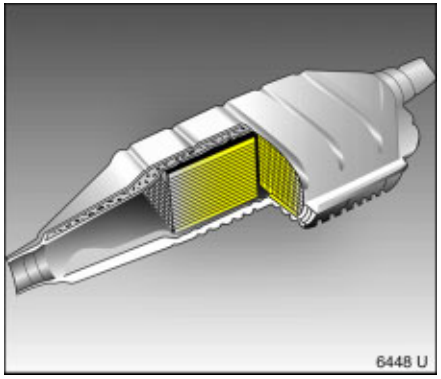

Catalytic converter, exhaust gasses

Catalytic converter

The catalytic converter reduces the amount of harmful substances in the exhaust gas, such as carbon monoxide (CO), hydrocarbons, (CH) and nitrous oxide (NO_x).

Fuel grades other than those listed on pages 139, 220 (e. g. LRP = Lead Replacement Petrol or leaded fuel) could damage the catalytic converter or electronic components.

Caution
Damage to the catalytic converter or the vehicle may result if the following points are not observed.

- In the event of misfiring, uneven engine running, a clear reduction in engine performance or other unusual problems, have the cause of the fault rectified by a workshop as soon as possible. In an emergency, driving can be continued for a short period, keeping vehicle speed and engine speed low.

  This does not apply when the Electronic Stability Program (ESP®Plus ✻) kicks in ⇨ 146.

- If unburnt fuel enters the catalytic converter of a petrol engine, this may result in overheating and irreparable damage to the catalytic converter.

  You should therefore avoid unnecessarily long use of the starter when starting off, running the tank dry and starting the engine by pushing or towing.

Controlling exhaust emission

Design measures, primarily in the fuel injection system and ignition system zones in combination with the catalytic converter, the amount of hazardous substances in the exhaust emissions, such as carbon monoxide (CO), hydrocarbons (CH) and nitrogen oxides (NO_x), are reduced to a minimum.

Control indicator for exhaust

Illuminates when the ignition is switched on and during the start attempt. Goes off shortly after the engine starts running.

Illumination whilst the engine is running indicates a fault in the emission control system. The permissible emission limits may be exceeded. Contact a workshop for assistance immediately.

Illumination with the engine running indicates a fault that can cause damage to the catalytic converter. It is possible to continue driving without causing damage by slowing down until the flashing stops and the control indicator illuminates. Contact a workshop for assistance immediately.

Control indicator for engine electronics

Illuminates for a few seconds after the ignition is switched on.

If it illuminates when the engine is running, there is a fault in engine or transmission electronics. The electronic system switches to an emergency running programme. Fuel consumption may be increased and the driveability of the vehicle may be impaired.

In some cases the fault can be remedied by switching the engine off and starting it again. If the control indicator continues to illuminate whilst the engine is running, contact a workshop for assistance in remedying the cause of the fault.

If it illuminates briefly, but does not recur, it is of no significance.

Lighting of may indicate water in the diesel fuel filter ✻. Have the fuel filter checked for water residue ⇨ 212.

If it flashes after the ignition is switched on, there is a fault in the immobiliser system. The engine cannot be started ⇨ 27.

Engine exhaust

⚠Warning
Engine exhaust gases contain poisonous carbon monoxide, which is colourless and odourless and could be fatal if inhaled. If exhaust gases penetrate the vehicle, open windows and contact a workshop for assistance. Avoid driving with the tailgate open, since exhaust gas can enter the interior of the vehicle.

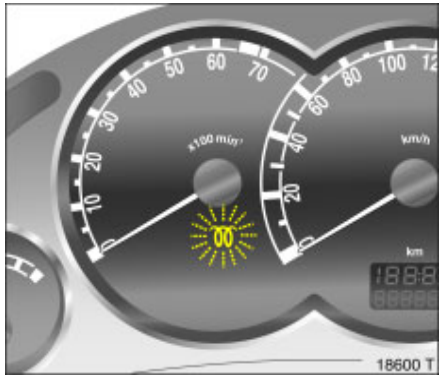

Diesel particle filter ✻
The diesel particle filter system filters harmful soot particles out of the exhaust gases. The system includes a self-cleaning function that run automatically during driving. The filter is cleaned by burning off the soot particles at high temperature. This process takes place automatically under set driving conditions and may take up to 25 minutes. Fuel consumption may be higher during this period. The emission of smells and smoke during this process is normal.

Under certain driving conditions, e.g. short journeys, the system may not clean itself automatically.

If the filter requires cleaning and previous driving conditions did not enable automatic cleaning, control indicator flashes. Continue driving, keeping engine speed above 2000 rpm^{-1}. Shift down if necessary. Diesel particle filter cleaning is then initiated.

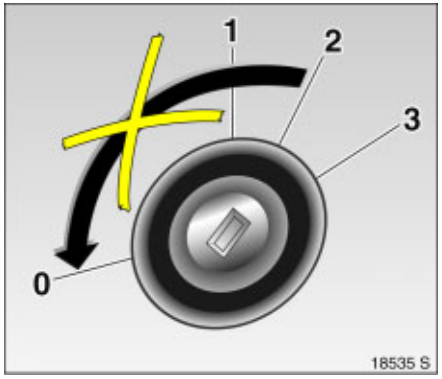

We recommend not stopping driving during cleaning, and not switching off the ignition. Cleaning is fastest at high engine revs and high loads.

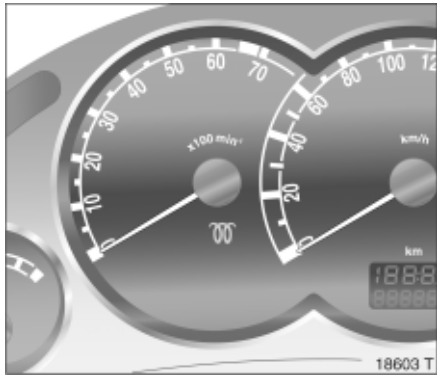

The control indicator goes off as soon as the self-cleaning operation is complete.

Maintenance
Have all maintenance work carried out at the specified intervals. We recommend that you entrust this work to your Opel Partner, who has proper equipment and trained personnel available. Electronic testing systems permit rapid diagnosis and remedy of faults. This way you can be certain that all components of the vehicle's electrical, injection and ignition systems operate correctly, that your vehicle has a low level of pollutant emission and that the catalytic converter system will have a long service life.

You are thereby making an important contribution towards keeping the air clean and compliance with emissions legislation.

Checking and adjustment of the fuel-injection and ignition systems is included in the inspection. For this reason, you should have all maintenance work carried out at the intervals specified in your Service and Warranty Booklet.

Drive Control Systems

Electronic Stability Program (ESP®Plus) ❇

ESP®Plus improves driving stability when necessary in any driving situation regardless of the type of road surface or tyre grip. It also prevents the drive wheels from spinning.

As soon as the vehicle starts to swerve (understeer/oversteer), engine output is reduced and the wheels are braked individually. This considerably improves the driving stability of the vehicle on slippery road surfaces.

ESP®Plus is ready for operation as soon as the ignition is switched on and control indicator goes out.

When ESP®Plus comes into action, flashes.

The vehicle is now in a critical situation; ESP®Plus allows you to keep control of the vehicle and reminds you to match your speed to the road conditions.

⚠Warning

Do not let this special safety feature tempt you into taking risks when driving.

ESP®Plus does not negate the laws of physics.

Adapt speed to the road conditions.

Control indicator

The warning light lights up for a few seconds when ignition is switched on. Once it goes out, the system is ready for operation.

Flashing during driving:
This shows the system has come into action. The engine output may be reduced (the sound of the engine changes) and the vehicle may be braked automatically to a small degree.

Illuminates while driving:
Fault in the system. Driving can be continued. Poor road surface conditions may however still cause vehicle stability to be impaired.

Have the cause of the fault eliminated. Self-diagnosis integrated into the system allows rapid fault identification.

Illuminates after interruption of power supply e.g. after disconnecting battery. After a power supply interruption the steering angle sensor must be calibrated to make the system operational:

- Automatic calibration driving in straight line at constant slow (20 to 40 km/h) speed on level, dry road.
- Manual calibration by turning steering wheel from limit position to limit position.

If the indicator lamp does not go off after successful calibration, observe notes in middle column.

Cruise control ✻
Cruise control can store and maintain speeds of approx. 30 to 200 km/h. Deviation from the stored speed is possible on uphill or downhill inclines.

For safety reasons the cruise control cannot be activated until the foot brake has been operated once.

The cruise control is operated with the buttons **I**, **R** and **O** on the turn signal lever.

Do not use the cruise control if it is not advisable to maintain a constant speed (e.g. in situations presenting a danger to yourself and other road users, in heavy traffic or on winding, slippery or greasy roads).

For manual transmission automated ✻, engage cruise control in automatic mode only.

⚠Warning
When the cruise control is active, reaction times may be increased due to the different position of the feet.

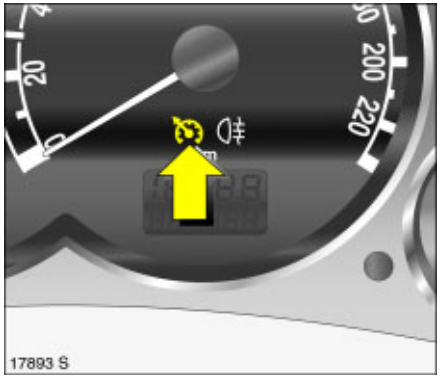

Control indicator ✻
The warning lamp lights up for a few seconds ✻ when the ignition is switched on. The system is now ready for operation.

When driving, the warning lamp lights up as soon as the system is switched on.

To activate
Tap button **I**: the current speed is stored and maintained. The accelerator pedal can be released.

Vehicle speed can be increased by depressing the accelerator pedal. When the accelerator pedal is released, the previously stored speed is resumed.

Accelerate
With cruise control activated, hold down button **I** or briefly press it repeatedly: speed is increased continuously or in steps of 2 km/h.

The current speed is stored and saved after the **I** button has been released.

Decelerate
With cruise control active, hold down button **R** or briefly press it repeatedly: speed is reduced continuously or in steps of 2 km/h.

The current speed is stored and saved after the **R** button has been released.

To deactivate
Briefly press the **O** button: cruise control is deactivated.

Automatic deactivation:

- vehicle speed below approx. 30 km/h
- the brake pedal is depressed
- the clutch pedal is depressed ✻
- move the selector lever on the manual transmission automated ✻ to **N**

Stored speed
The speed is saved until the ignition is switched off.

To resume the saved speed, briefly press the **R** button at a speed above 30 km/h.

Ultrasonic parking sensors ✻
Park pilot makes reverse parking easier by measuring the distance between the back of the vehicle and obstacles to the rear. It is the driver, however, who maintains full responsibility for parking.

The system records the distance using four sensors in the rear bumper.

To activate
The park pilot system activates automatically when the ignition is switched on and reverse gear is engaged.

Operational readiness is indicated by a brief tone.

If the vehicle approaches an obstacle, a series of acoustic signals sound. The interval between the signals becomes shorter as the vehicle gets closer to the obstacle. When the distance is less than 30 cm, the signal is continuous.

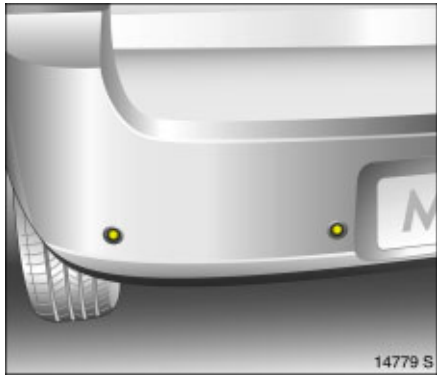

⚠Warning

Under certain circumstances, various reflective surfaces on objects or clothing as well as external noise sources may cause the system to fail to detect obstacles.

To deactivate
The system deactivates automatically when reverse gear is disengaged.

Towing equipment, caravan/trailer towing
If a towing device is subsequently fitted to the vehicle, the system must be set to the modified vehicle length by a workshop.

When operating without a trailer, the tow bar must be removed else the system can be damaged.

Fitting rear load racks ✻
Rear carriers, e. g. bike carriers, could cause system malfunction.

Fault
On system faults, a permanent tone sounds at a distance of 1 metre from the obstacle. Have the cause of the fault eliminated by a workshop.

In order to avoid operational problems or erroneous information, the sensors must be undamaged and free of soiling, snow and ice.

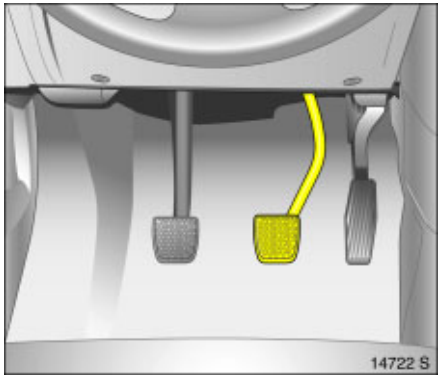

Hydraulic brake system

The brake system comprises two independent brake circuits.

If a brake circuit fails, the vehicle can still be braked using the other brake circuit. However, the brake pedal must be depressed a considerable way before any braking effect occurs, and much more force is required. The braking distance is longer. Contact a workshop for assistance before continuing to drive.

To ensure that full pedal travel can be utilised, especially in case of a fault in one of the brake circuits, there must be no mats in the vicinity of the pedals ⇨ 136.

When the engine is not running, the support of the brake servo unit disappears once the brake pedal has been depressed once or twice. Braking effect is not reduced, but braking requires significantly greater force. This is especially important to bear in mind when towing.

The brake fluid level should be checked regularly. If the brake fluid level is too low and the hand brake is not applied, control indicator (!) on the instrument panel illuminates ⇨ 85.

Brake system control indicator (!)
The control indicator illuminates after the ignition is turned on, when the hand brake is applied or if the brake or clutch fluid level is too low. Brake fluid ⇨ 214.

⚠Warning
If the control indicator illuminates when the hand brake is released, stop driving immediately. Contact a workshop for assistance.

For vehicles with manual transmission automated ✻, the control indicator flashes for a few seconds when the ignition is turned off when the hand brake is not applied.

Anti-lock brake system (ABS ⓐⓑⓢ)

ABS prevents the wheels from locking.

ABS starts to regulate brake pressure as soon as a wheel shows a tendency to lock. The vehicle remains steerable, even during hard braking.

ABS control is made apparent though a pulse in the brake pedal and the noise of the regulation process.

For optimum braking, keep the brake pedal fully depressed throughout the braking process, despite the fact that the pedal is pulsating. Do not reduce the pressure on the pedal.

Control indicator ⓐⓑⓢ for ABS
It illuminates for a few seconds when ignition is switched on. Once the control indicator goes out, the system is ready for operation.

If the control indicator does not go out after a few seconds, or if it illuminates while driving, there is a fault in the ABS. The brake system remains operational without ABS regulation.

Adaptive brake lamp ✻
During full-on braking, all three brake lamps flash for the duration of ABS control.

Self testing
When the engine is started and the vehicle starts off, the system performs a self-check, which may be audible.

Fault

⚠Warning
If there is a fault in the ABS, the wheels may be liable to lock due to braking that is heavier than normal. The advantages of ABS are no longer available. During hard braking, the vehicle can no longer be steered and may swerve.

Have cause of fault remedied by a workshop. The system's integrated self diagnostics allow faults to be quickly remedied.

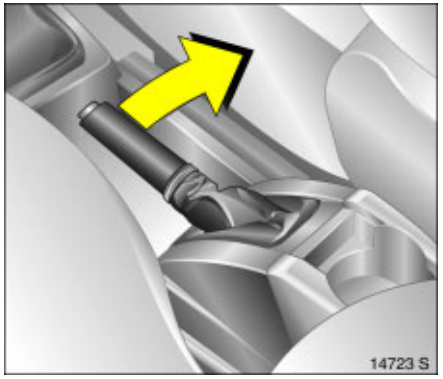

Hand brake

Always apply hand brake firmly without pressing the release button, and apply as firmly as possible on steep slopes.

To release the hand brake pull lever up slightly, press release button, and lower lever all the way down.

To reduce the operating forces of the hand brake, depress the foot brake at the same time.

Brake assist

If the brake pedal is operated quickly with a powerful push, the vehicle is automatically braked at full braking power in order to achieve the shortest possible braking distance when full-on braking occurs (brake assist).

Maintain steady pressure on the brake pedal for as long as full-on braking is to continue. When the brake pedal is released, the maximum brake force amplification is taken away.

Hill Start Assist ❄ (HSA)

The system helps pull away on inclines. After releasing the footbrake, if the hand brake is not applied the brakes are only released after 2 seconds. As soon as the acceleration is sufficient to prevent rolling back, the brake is released.

Wheels, tyres

Suitable tyres and restrictions ⇨ 228.

Tyres fitted in the factory are adapted to the chassis and provide optimum driving comfort and safety.

Changing tyre/wheel type
If tyres of a different size than those fitted at the factory are used, it may be necessary to reprogram the electronic speedometer and make other vehicle modifications.

After converting to a different tyre size, have the adhesive label with tyre pressures replaced.

⚠Warning
Use of unsuitable tyres or wheels may lead to accidents and render the vehicle unroadworthy.

Fitting new tyres
Fit tyres in pairs or in sets, which is even better. Ensure that tyres on one axle are
- the same size
- the same design
- the same make
- and have the same tread pattern

Fit directional tyres such that they roll in the direction of travel. The rolling direction is indicated by a symbol (e.g. an arrow) on the sidewall.

Tyres fitted opposing the rolling direction (such as when changing a tyre) should be refitted as soon as possible. This is the only way to benefit fully from the design properties of the tyre.

Pay attention to legal requirements when disposing of tyres.

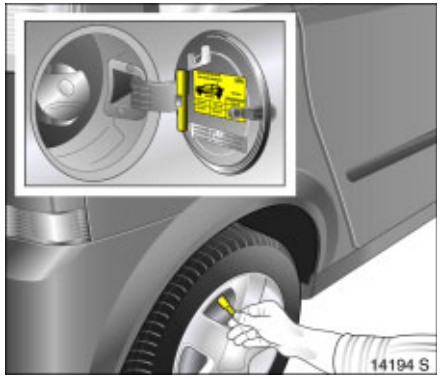

Tyre pressure
Check tyre pressure, including the spare wheel, at least every 14 days and prior to any long journey; the tyres should be checked when cold. Don't forget to check the spare wheel ✻.

Remove the valve cap key from the tank flap and use it to unscrew the valve cap.

Tyre pressure ⇨ 228 and on the adhesive label ✻ on the inside of the tank flap.

The tyre pressure data is for cold tyres. It applies to both summer and winter tyres.

Always inflate the spare wheel ✻ to the pressure specified for full load.

Do not reduce tyre pressure when the tyres are warm. Otherwise the pressure may drop below the permissible minimum when the tyres cool down.

After having checked the tyre pressure, tighten the valve caps using the valve cap key.

Incorrect inflation pressures will impair safety, vehicle handling, comfort and fuel economy and will increase tyre wear.

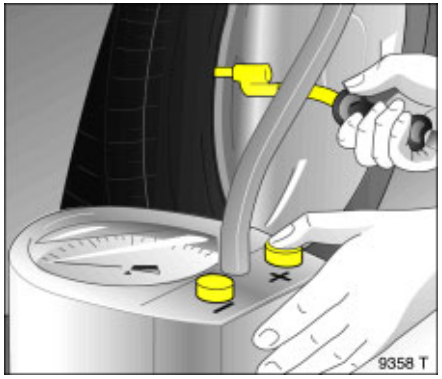

⚠Warning

If the pressure is too low, this can result in considerable tyre warm-up and internal damage, leading to tread separation and even to tyre blow-out at high speeds.

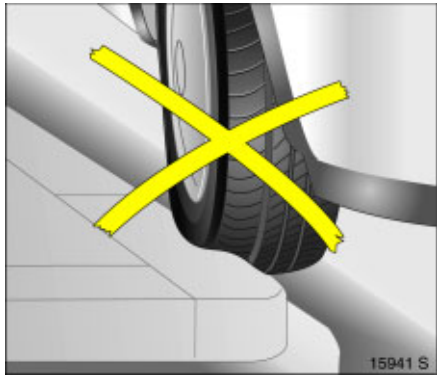

Tyre condition, wheel condition
Drive over edges slowly and at right angles if possible. Driving over sharp edges can cause tyre and wheel damage. Do not trap tyres on the kerb when parking.

Regularly check wheels for damage. Seek the assistance of a workshop if there is any damage or unusual wear.

Tread depth
Check tread depth regularly.

For reasons of safety, tyres should be replaced when their tread depth has worn down to 2 to 3 mm (winter tyres: 4 mm).

The legally permissible minimum tread depth (1.6 mm) has been reached when the tread has worn down as far as one of the wear indicators (TWI[1]). A number of wear indicators are spaced at equal intervals around the tyre within the tread. Their position is indicated by markings on the tyre sidewall.

[1] **TWI** = **T**read **W**ear **I**ndicator.

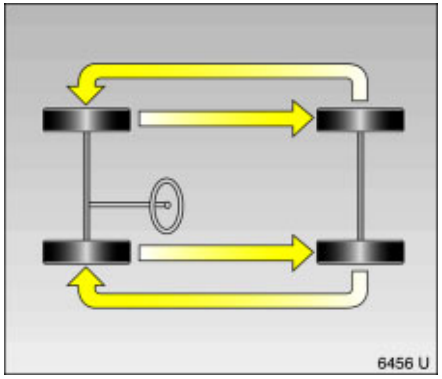

If wear in the front is greater than that in the rear, move the rear wheels to the front axle and vice versa.

Correct tyre pressure.

General information

- The risk of aquaplaning is greater if the tyres are worn.
- Tyres age, even if they are not used or used infrequently. We recommend tyre replacement every six years at the latest.
- Never fit used tyres the previous history and use of which you do not know.

Tyre designations

Meanings:

e.g. **175/70 R 14 88 T**

175	=	Tyre width in mm
70	=	Cross-section ratio (tyre height to tyre width in %)
R	=	Belt type **R**adial
14	=	Rim diameter in inches
88	=	Load index e.g. 88 corresponds to 567 kg
T	=	Speed code letter:

Speed code letters:

Q	=	Up to 160 km/h
S	=	Up to 180 km/h
T	=	Up to 190 km/h
H	=	Up to 210 km/h
V	=	Up to 240 km/h
W	=	Up to 270 km/h

Winter tyres ✻
Notes on fitting new tyres ⇨ 154.

Restrictions ⇨ 228.

Winter tyres improve driving safety at temperatures below 7 □C.

The design of summer tyres means they have limited qualities for winter driving.

In accordance with country-specific regulations, affix the speed sticker ✻ in the driver's field of view.

If you use the spare wheel when it is fitted with a summer tyre, the vehicle's driveability may be affected, especially on slippery road surfaces. Obtain a replacement for the faulty tyre as soon as possible, and have the wheel balanced and fitted to the vehicle.

Wheel covers ✻
Use of wheel trims and tyres that approved by Opel for the vehicle in question and thereby fulfil all requirements for the wheel and tyre combination.

If the wheel trims and tyres used are not Opel-approved, the tyres must not have a beaded edge.

Wheel trims must not impair brake cooling.

Remove the wheel trims if fitting tyre chains ✻.

⚠Warning

Use of unsuitable tyres or wheel trims could lead to sudden loss of air and thereby accidents.

Tyre chains ✻
Restrictions and further information ⇨ 228.

Tyre chains are only permitted on the driven wheels (front axle). They must be fitted to the tyres symmetrically in order to achieve a concentric fit.

Always use fine mesh chains that add no more than 10 mm to the tyre tread and the inboard sides (including chain lock).

Remove the wheel trims if using tyre chains ⇨ 174.

Tyre chains may only be used at speeds up to 50 km/h. When travelling on roads that are free of snow, they may only be used for brief periods.

⚠Warning
Damage may lead to tyre blowout.

Tyre chains must not be used on the temporary spare wheel. If you need to use tyre chains after suffering a flat front tyre, fit the temporary spare on the rear axle and transfer one of the rear wheels to the front axle.

Roof rack ✻

For safety reasons and to avoid roof damage we recommend using the Opel roof rack system that is approved for your vehicle.

Follow the usage instructions for the roof rack.

Remove the roof rack when not in use.

Disengage covers concealing roof rack mounts by pushing sliders in direction of arrow (e.g. with coin) and remove. To close roof rack mounts, insert covers at front and engage sliders at rear.

Driving hints ⇨ 135

Towing equipment ✻

Only use towing equipment that has been approved for your vehicle. Ask a workshop to retrofit towing equipment. It may be necessary to make changes that affect the cooling system, heat shields or other equipment.

Mounting dimensions of towing equipment ⇨ 232.

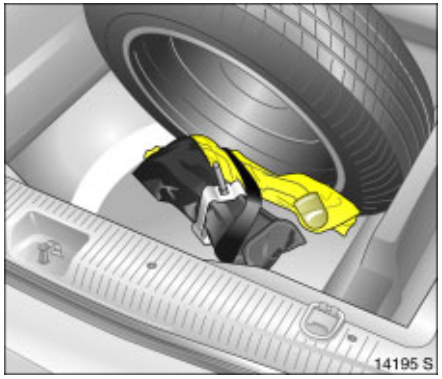

Towing equipment with removable coupling ball bar ✻

Caution
The coupling ball bar is to be removed when not towing.

Stowage of coupling ball bar
The coupling ball bar is located in a bag with the vehicle tools housed under the spare wheel - see Fig. above.

Spare wheel ✻ ⇨ 172.

On vehicles with tyre repair kit ✻, the coupling ball bar is located in the left stowage compartment beneath the floor cover in the luggage compartment ⇨ 162, Fig. 17923 S.

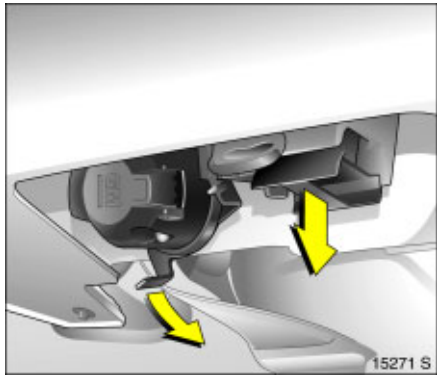

Fitting the coupling ball bar
Fold down the socket. Remove the sealing plug from the hole for the coupling ball bar and stow it in the luggage compartment.

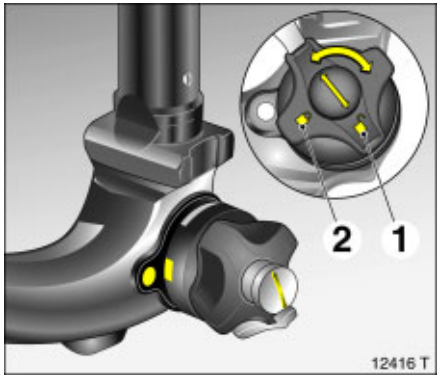

Checking the tensioning of the coupling ball bar

- Red marking on rotary knob must point towards white marking on coupling ball bar.
- The gap between the rotary knob and the coupling ball bar must be approx. 4 mm.
- Key in the lock must be at position **1**.

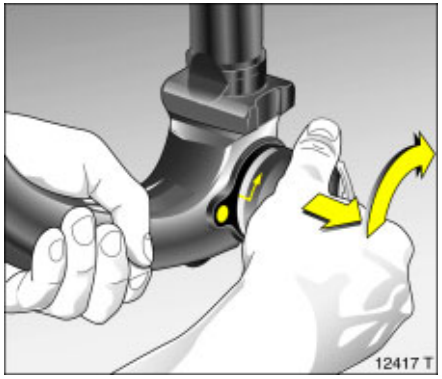

Otherwise, the coupling ball bar must be tensioned before it is inserted into the coupling housing:

- Unlock coupling ball bar by turning key to position **1** ⇨ 159, Fig. 12416 T.
- Pull out rotary knob and turn clockwise as far as it will go, see Fig.

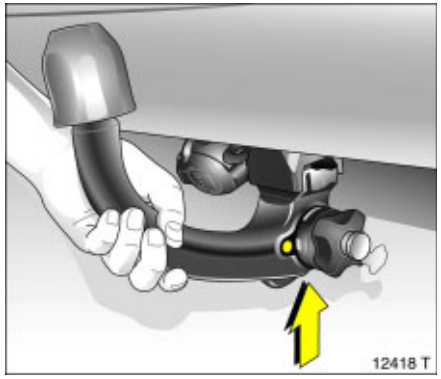

Inserting the coupling ball bar

Insert the tensioned coupling ball bar in the housing and push firmly upwards until it audibly engages.

The rotary handle snaps back into its home position resting against the coupling ball bar (no gap).

⚠Warning
Do not touch rotary handle during insertion.

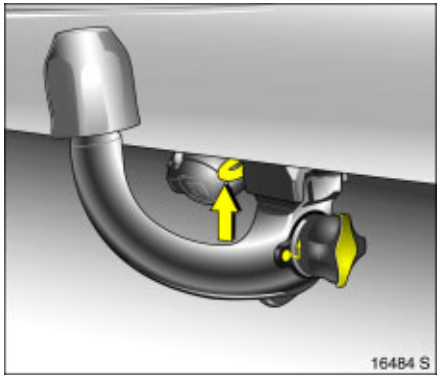

Lock the coupling ball bar in position by turning key to position **2** ⇨ 159, Fig. 12416 T. Remove the key and press the protective flap into place.

When the coupling ball bar is locked the turn knob can no longer be pulled out.

Check that the coupling ball bar is correctly installed

- Green marking on rotary knob must point towards white marking on coupling ball bar
- There must be no gap between the rotary handle and the coupling ball bar
- The coupling ball bar must be firmly engaged in the opening
- The coupling ball bar must be locked and the key removed

⚠Warning

Towing a caravan/trailer is only permitted with a properly fitted coupling ball bar. If the coupling ball bar cannot be correctly fitted, please contact a workshop for assistance.

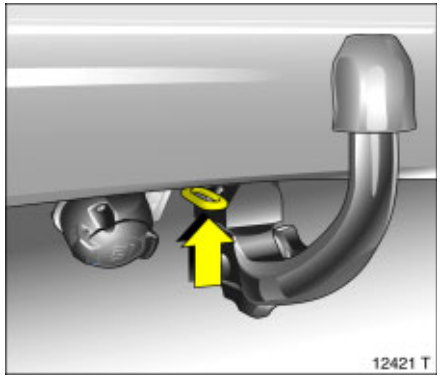

Eye for break-away stopping cable
In the case of trailers/caravans with brakes, attach breakaway stopping cable to eye.

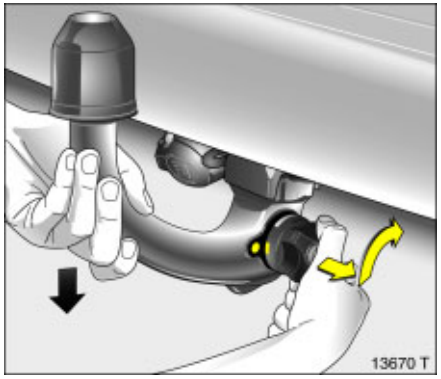

Dismounting the coupling ball bar
Open the protective flap and turn the key to position **1** to unlock the coupling ball bar ➪ 159, Fig. 12416 T.

Pull out rotary handle and turn clockwise as far as it will go. Pull out coupling ball bar downwards.

Insert the sealing plug in the opening for the coupling ball bar. Close the socket ➪ 159, Fig. 15271 S.

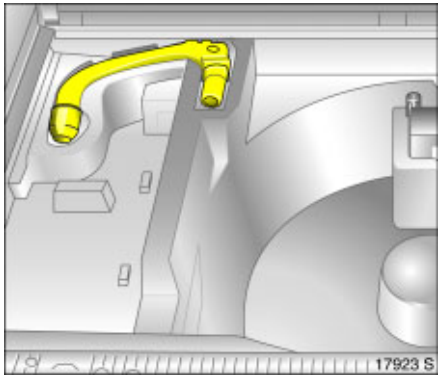

Stowage of coupling ball bar
Place coupling ball bar in bag and clip onto the tool kit below the spare wheel ➪ 159, Fig. 14195 S.

On vehicles with tyre repair kit ❇, the coupling ball bar is stored in the left stowage compartment beneath the floor cover in the luggage compartment - see Fig. above.

Caravan/trailer towing

Caravan and trailer loads[1)]
The permissible caravan/trailer loads are vehicle and engine-dependent maximum values which must not be exceeded. The actual caravan/trailer load is the difference between the actual gross weight of the caravan/trailer and the actual coupling socket load with the caravan/trailer coupled.

The permissible caravan/trailer loads are specified in the vehicle documents. In general, they are valid for gradients up to maximum 12%

[1)] Observe national regulations.

The permitted caravan/trailer load applies up to the specified incline and up to an altitude of 1000 metres above sea level. Since engine power decreases as altitude increases because of the air becoming thinner, therefore reducing climbing ability, the permitted towing weight also decreases by 10 % for every 1000 metres of additional altitude. The towing weight does not have to be reduced when driving on roads with slight inclines (less than 8 %, e.g. motorways).

The permissible gross train weight must not be exceeded. This weight is specified on the identification plate ➪ 218.

Coupling socket load
The coupling socket load is the load exerted by the trailer/caravan on the coupling ball. It can be varied by changing the weight distribution when loading the trailer/caravan.

The maximum permissible coupling socket load (55 kg) of the towing vehicle is specified on the towing equipment identification plate and in the vehicle documents. This must always be complied with, particularly in the case of heavy caravans/trailers. The coupling socket load should be no less than 25 kg.

When measuring the coupling socket load, make sure that the drawbar of the loaded trailer/caravan is at the same height as it will be when the trailer/caravan is coupled with the towing vehicle loaded. Particularly important for trailers/caravans with tandem axle.

Rear axle load during towing
With the trailer connected and the towing vehicle fully loaded including all occupants, the permitted rear axle load (specified on the identification plate and vehicle documents) must be exceeded by no more than 25 kg and the maximum permitted gross vehicle weight by no more than 30 kg. If the maximum permitted rear axle load is exceeded, a maximum speed of 100 km/h applies, and 80 km/h for commercial vehicles.

Driving characteristics, towing tips
Before attaching the trailer/caravan, lubricate the ball of the trailer/caravan towing device. However, do not lubricate the ball if a stabiliser, which acts on the coupling ball, is being used to damp hunting.

Check caravan/trailer lighting before starting to drive. The fog tail lamps on the vehicle are deactivated when towing a caravan or trailer.

Trailers with LED turn signals must have a provision enables lamp monitoring for commercial bulbs.

Handling is greatly influenced by the loading of the trailer/caravan. Loads should therefore be secured so that they cannot slip and be placed in the centre of the trailer/caravan if possible, i.e. above the axle.

In the case of trailers with low driving stability, do not exceed a speed of 80 km/h; the use of a friction-type stabiliser is strongly recommended.

If the trailer/caravan starts to sway, drive more slowly, do not attempt to correct the steering and brake sharply if necessary.

If it is necessary to apply the brakes fully, depress the brake pedal as hard as possible.

Remember that the braking distance for vehicles towing caravans/trailers with and without brake is always greater than that for vehicles not towing a caravan/trailer.

When driving downhill, drive in the same gear as if driving uphill and drive at a similar speed.

Adjust tyre pressure to the value specified for full load ⇨ 228.

Starting on inclines

For vehicles with manual transmission, the most favourable engine speed when starting off on an incline is between 2500 and 3000 rpm for petrol engines and between 2000 and 2500 rpm for diesel engines. Hold engine speed constant, engage clutch gradually (let slip) – release hand brake – and open throttle. If possible, the engine speed should not drop during this procedure.

For vehicles with manual transmission automated ✻ in Automatic mode simply apply full gas.

Before starting off under extreme operating conditions, switch off unnecessary consumers.

Self-help, vehicle care

Diesel fuel system, bleeding 165
Bonnet 165
Starting the engine with jump leads ✻..... 166
Towing 168
Warning triangle ⚠ ✻, First-aid kit ⊕ ✻..... 171
Jack ✻ and vehicle tools ✻..... 171
Spare wheel ✻..... 172
Changing wheels 174
Tyre repair kit ✻..... 178
Electrical system 181
Fuses and the most important circuits they protect 182
Bulb replacement 185
Vehicle care..... 196

Diesel fuel system, bleeding

If the tank is allowed to run dry, the diesel fuel system must be bled. Turn over the ignition three times for 15 seconds at a time. Then start the engine for a maximum of 40 seconds[1]. Repeat this process after no less than 5 seconds. If the engine fails to start, seek the assistance of a workshop.

[1] For technical reasons, only 30 seconds are possible on engines Y 17 DT and Z 17 DTH

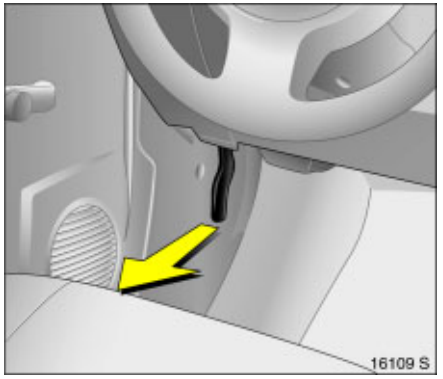

Bonnet

Pull the release lever located on the driver's side below the instrument panel and push it back to its original position.

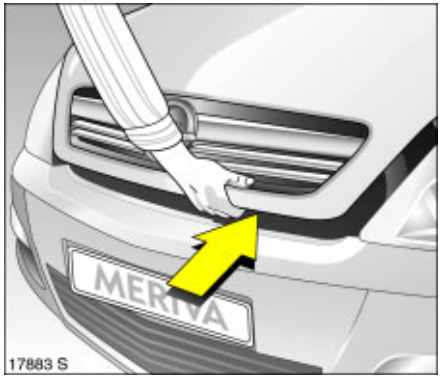

Pull the safety catch and open the bonnet.

Any dirt or snow on the bonnet can slide down toward the windscreen when the bonnet is opened and block the air intake ⇨ 127.

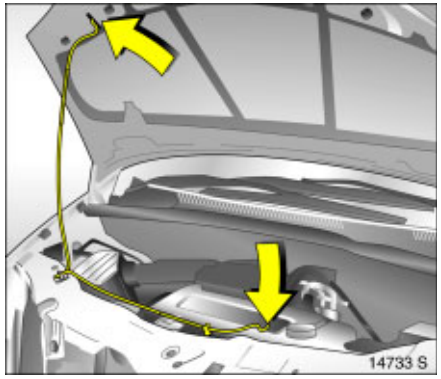

Secure the bonnet support. Before closing the bonnet, press the support into the holder.

Lower the bonnet and allow it to drop into the catch. Check that the bonnet is engaged.

Starting the engine with jump leads ✻

Do not use a rapid charger or push or two the vehicle to get it started.

A vehicle with a discharged battery can be started using jump leads and the battery of another vehicle.

⚠Warning

Starting the engine with jump leads must be carried out with the utmost caution. Any deviation from the following instruction may lead to injury or damage due to the explosion of the batteries and to damage of the electrics in both vehicles.

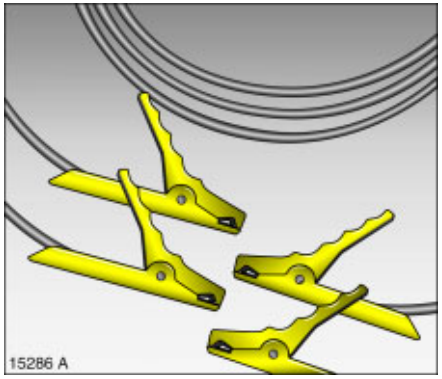

- Never expose the battery to naked flames or sparks.
- A flat battery can freeze at temperatures around 0 ☐C. Defrost the battery before connecting up jump leads.
- Do not allow battery fluid to come into contact with eyes, skin, fabrics or painted surfaces. The fluid contains sulphuric acid which can cause injuries and damage in the event of direct contact.
- Wear eye protection and protective clothing when handling a battery.
- Use a booster battery with the same voltage (12 volts). Its capacity (Ah) must not be much less than that of the discharged battery.
- Use jump leads with insulated terminals and a cross section of at least 16 mm^2 (25 mm^2 for diesel engines).
- Do not disconnect the discharged battery from the vehicle.
- Switch off all unnecessary electrical consumers.
- Do not lean over the battery during jump starting.
- Do not allow the terminals of one lead to touch those of the other lead.
- The vehicles must not come into contact with each other during the jump starting process.
- Apply the handbrake. Gear lever in neutral.

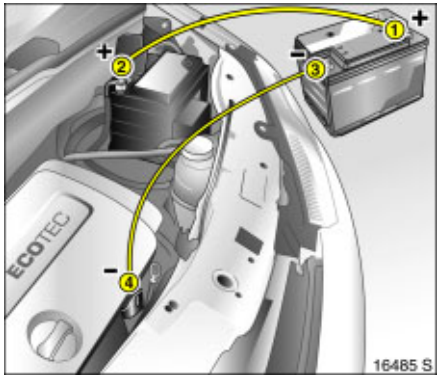

Lead connection order:

1. Connect the red lead to the positive terminal **1** of the booster battery.
2. Connect the other red lead to the positive terminal **2** of the discharged battery.
3. Connect the black lead to the negative terminal **3** of the booster battery.
4. Connect the other end of the black lead **4** to a vehicle grounding point, such as the engine block or a screw connection in the engine suspension. Connect as far away from the discharged battery as possible.

Route the leads so that they cannot catch on rotating parts in the engine compartment.

To start the engine:

1. Start the engine of the vehicle providing the jump start.
2. After 5 minutes, start the other engine. Start attempts should be made at intervals of 1 minute not last longer than 15 seconds.
3. Allow both engines to idle for approx. 3 minutes with the leads connected.
4. Switch on electrical consumers (e.g. light, heated rear window) of the vehicle receiving the jump start.
5. Reverse above sequence exactly when removing leads.

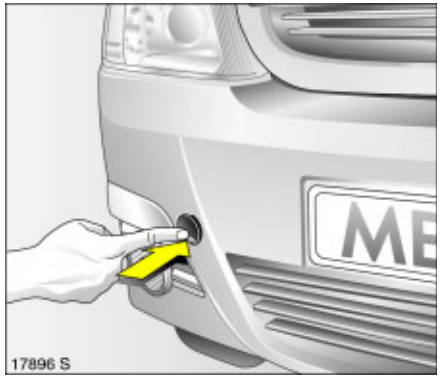

Towing

Towing your own vehicle

Disengage cap at bottom and remove downwards.

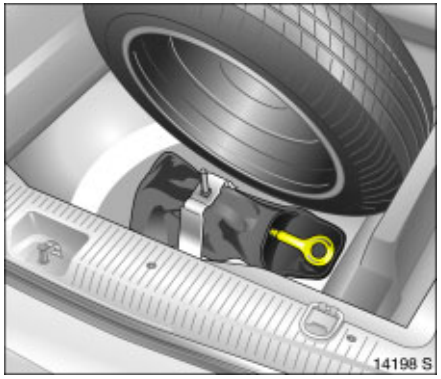

The towing eye is in the tool kit ✻ in the luggage compartment underneath the spare wheel ✻, see Fig. above, or for versions with tyre repair kit ✻, in the storage compartment underneath the floor cover, see Fig. 17918 S.

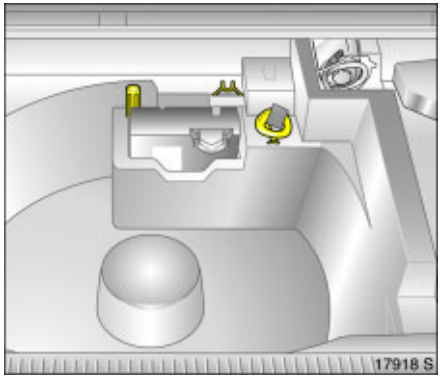

Screw in the towing eye anticlockwise as far as it will go until it stops in a horizontal position.

Attach a tow rope ✻ – or better still a tow rod ✻ – to the eye.

The towing eye may only be used for towing and not for recovery of the vehicle.

Switch on ignition to release steering column lock and to permit operation of brake lamps, horn and windscreen wipers.

Gear lever in neutral.

Caution
Drive slowly. Do not drive jerkily. Excessive tractive force can damage the vehicle.

When the engine is not running, considerably more force is needed to brake and steer.

To prevent the entry of exhaust fumes from the towing vehicle, switch on the air recirculation ✻ and close the windows.

Contact a workshop for assistance.

If the automatic clutch has been manually disengaged in vehicles with manual automated transmission ✻ towing is not permitted ⇨ 134. In this case, contact a workshop for assistance immediately.

After towing, unscrew towing eye by rotating clockwise and insert and close the cap.

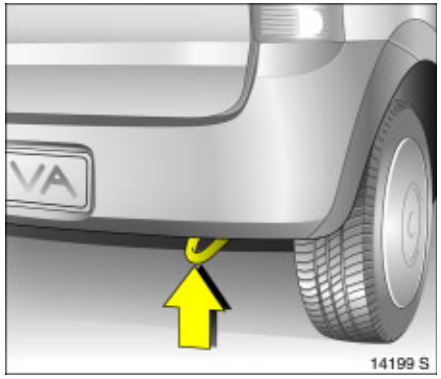

Towing another vehicle
Attach a tow rope ✻ – or better still a tow rod ✻ – to the rear towing eye on the right side of the vehicle underbody, but never to the rear axle.

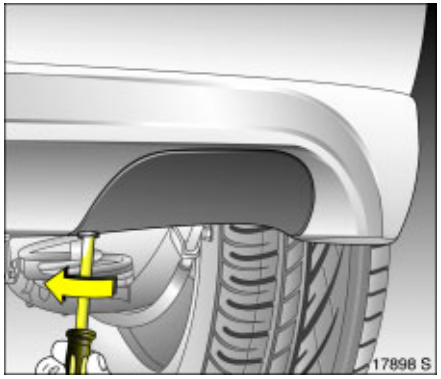

On some versions, the towing eye is located behind a cover.

Slacken the screw a quarter turn with a screwdriver (see Fig.) and remove the cover.

The towing eye may only be used for towing and not for recovery of the vehicle.

Caution
Drive slowly. Do not drive jerkily. Excessive tractive force can damage the vehicle.

After towing, fit cover ✻ and secure with bolt.

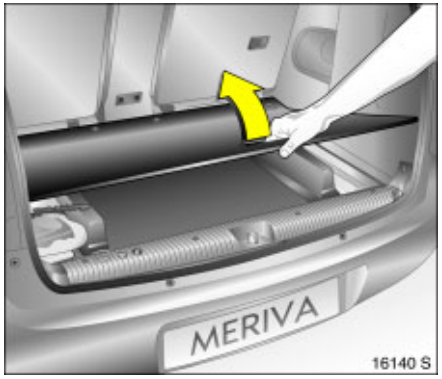

Warning triangle ⚠ ✻, First-aid kit ⊕ ✻

The warning triangle and first aid cushion are strapped with a rubber band in the compartment on the left of the luggage compartment beneath the floor covering.

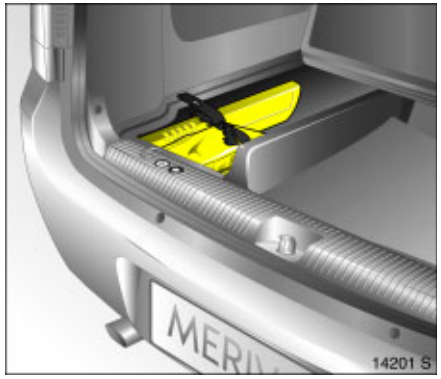

To open, remove the luggage compartment cover ✻ ⇨ 55, lift the floor using the handle and raise toward the front.

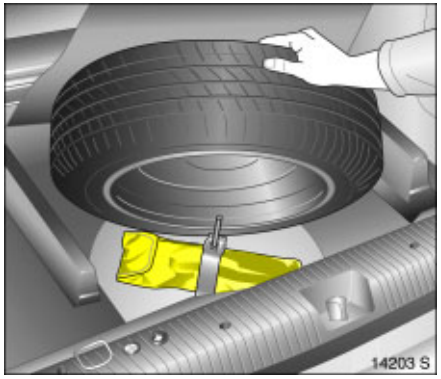

Jack ✻ and vehicle tools ✻

Vehicles with spare wheel ✻

The jack and vehicle tools are stowed in a bag underneath the spare wheel in the luggage compartment.

The jack ✻ and the vehicle tools ✻ have been specially developed for your vehicle and must only be used on that vehicle. Only use jack for changing wheels.

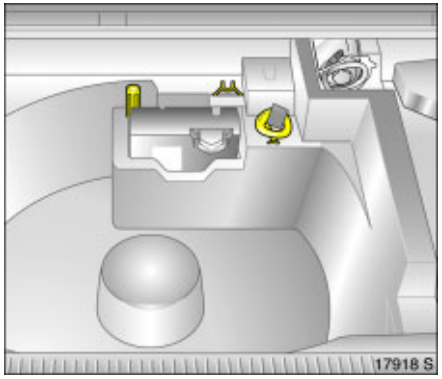

Vehicles with tyre repair kit ✻
The jack and tyre repair kit are located in the storage compartment below the floor covering in the luggage compartment.

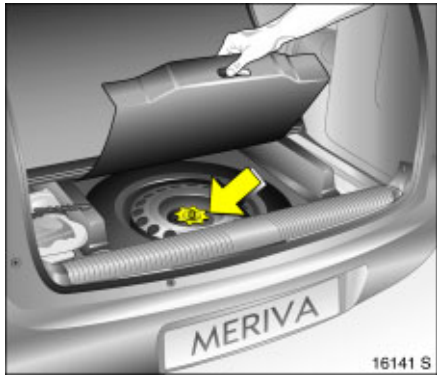

Spare wheel ✻

Some vehicles are equipped with a tyre repair kit instead of a spare wheel ⇨ 178.

Storing the spare wheel in the luggage compartment
The spare wheel is in the luggage compartment below the floor cover. It is mounted via a wing nut in a well in the vehicle floor.

To access the spare wheel, remove the luggage compartment cover ✻ ⇨ 55, lift the floor cover using the handle and raise toward the front. Fold the spare wheel cover up toward the front.

Placing wide wheels in the spare wheel well
The spare wheel well is not designed for all sizes of permitted tyres. If a wider wheel is stowed in the spare wheel well after changing wheels, the floor cover can rest on the protruding wheel.

This must be taken into account when loading the luggage compartment.

General information
Depending on version, the spare wheel may be in the form of a temporary spare wheel ✻. Refer to the notes on this page and ⇨ 157, ⇨ 228.

On vehicles with alloy wheels ✻ the spare wheel may have a steel rim.

Use of a spare wheel together with winter tyres could alter driving conditions. Have the defective tyre replaced as soon as possible.

Use of a spare wheel that is smaller than the other wheels could alter driving conditions. In many countries, it is only permitted as a temporary spare wheel. Have the defective tyre replaced as soon as possible.

Notes on temporary spare wheel ✻

- The use of the temporary spare wheel may affect the handling of the vehicle, particularly if winter tyres are being used ✻. The Electronic Stability Program ESP®Plus ✻ may switch itself off. Replace defective tyre as soon as possible, balance wheel and fit to vehicle.
- Fit only one temporary spare wheel.
- Do not drive faster than 80 km/h.
- Take curves slowly.
- Do not use the temporary spare wheel for a lengthy period.
- Replace temporary spare wheel with full specification wheel without delay.
- Tyre chains are not permitted on the temporary spare wheel. If tyre chains have to be used after a front wheel puncture, fit temporary spare wheel to the rear axle and fit a rear wheel to the front axle. Check tyre pressure and correct if necessary ⇨ 228.
- Observe notes on temporary spare wheel on ⇨ 157, ⇨ 228.

Notes on directional tyres ✻
Fit directional tyres such that they roll in the direction of travel. The rolling direction is indicated by a symbol (e.g. an arrow) on the sidewall.

The following applies to tyres fitted opposing the rolling direction:

- Driving conditions may be altered. Have the defective tyre replaced as soon as possible.
- Do not drive faster than 80 km/h.
- Be especially careful when driving in rain and snow.

Further information on directional tyres ⇨ 154.

Changing wheels

There may be a tyre repair kit instead of a spare wheel ⇨ 178.

Make the following preparations and observe the following information:

- Park the vehicle on a level, firm and non-skid surface. The front wheels must be in the straight-ahead position.
- Switch on the hazard warning flashers, apply the hand brake, engage first gear or reverse.
- Erect warning triangle as specified. Warning triangle ⇨ 171.
- Remove the spare wheel ⇨ 172.
- Never change more than one wheel at once.
- Use the jack ✻ only to change wheels.
- If the ground on which the vehicle is standing is soft, a solid board (max. 1 cm thick) should be placed under the jack ✻.
- Block the wheel diagonally opposite the wheel to be changed by placing wedge blocks or equivalent in front and behind the wheel.
- No people or animals may be in the vehicle when it is jacked up.
- Never crawl under a jacked-up vehicle.
- Do not start the vehicle when it is raised on the jack.
- Before screwing in the wheel bolts, clean them and lightly coat the taper of each wheel bolt with commercially available grease.

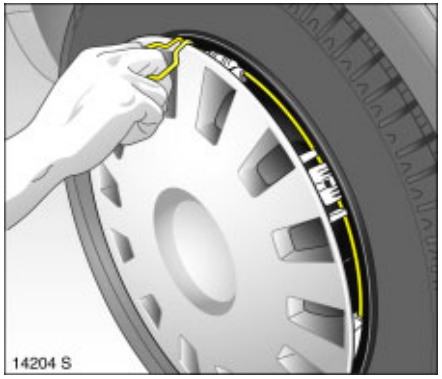

1. Pull off the wheel trim with the hook ✻. Vehicle tools ⇨ 171.

   For wheel trims with visible wheel bolts ✻: The trim can remain on the wheel. Do not remove the retaining washers ✻ on the wheel bolts.

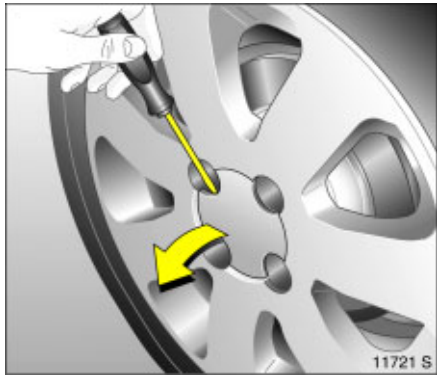

Alloy wheels ✻: Prise off the hub cap by inserting a screwdriver ✻ in the recess at the side of the hub cap. Protect the rim by placing a soft cloth between the screwdriver and the alloy wheel.

Remove wheel bolt caps ✻ from wheel bolts.

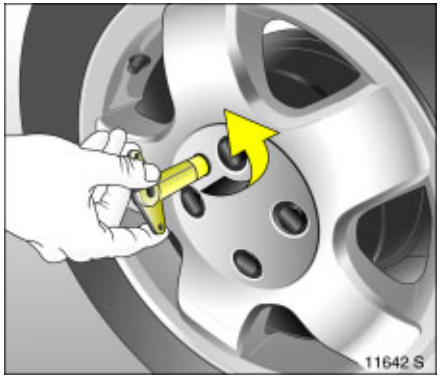

Alloy wheels with anti-theft protection ✻: unscrew hubcaps using the wheel nut socket and remove. Vehicle tools ⇨ 171.

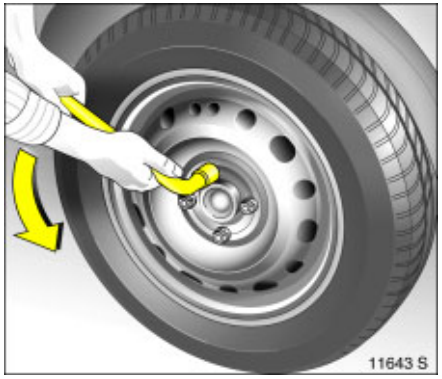

2. Push the wheel bolt wrench ✻ on as far as possible and slacken the wheel bolts half a turn.

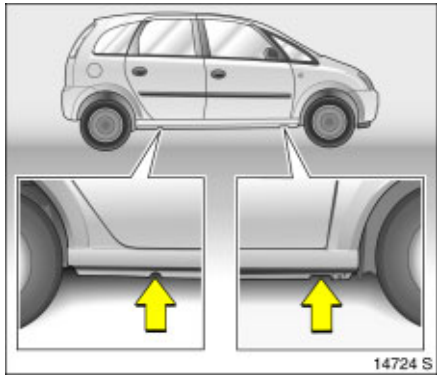

3. The jacking points are marked.

   On Meriva OPC and OPC Line and vehicles with sill trims, the jack ✻ cannot be used. It could damage the vehicle.

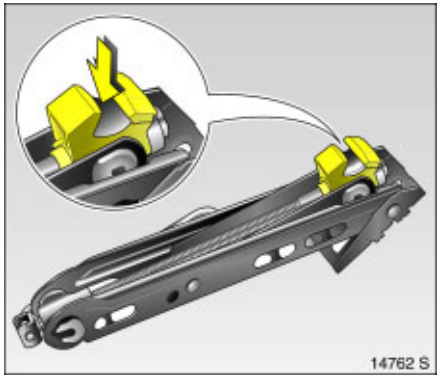

4. Set the jack ✻ to the required height by turning the lug by hand. Fit the jack arm at the front – or rear – so that the jack claw (arrow in Fig.) grasps the vertical ridge and engages in the recess in the ridge. Ensure that the claw is properly positioned.

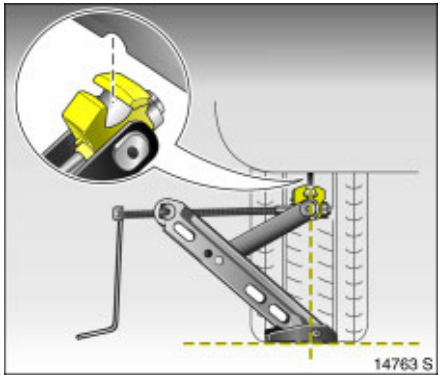

The edge of the jack base must be planted firmly and vertically in line with the contact point.

Raise vehicle by turning crank handle.

If this is not the case, carefully lower the vehicle immediately and reposition the jack.

5. Unscrew the wheel bolts.

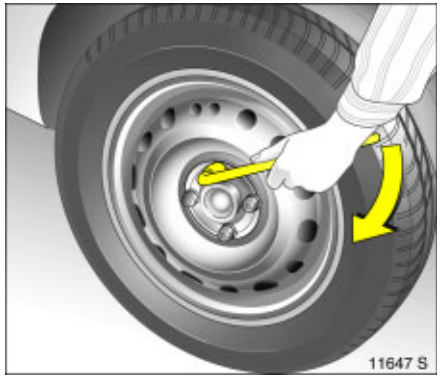

If the wheel bolts have retaining washers ✻, they must not be removed.

6. Change wheel. Notes on spare wheel ➪ 172. Notes on temporary spare wheel ➪ 173.
7. Screw in the wheel bolts. Push the wheel bolt wrench ✻ on as far as possible and tighten the wheel bolts slightly.
8. Lower vehicle.
9. Push the wheel bolt wrench ✻ on as far as possible and tighten crosswise. Tightening torque is 110 Nm.
10. Before refitting the wheel trim, clean the wheel around the retaining clips. Valve symbol ✻ on back of wheel trim must point towards valve on wheel.

    Align and refit wheel trim or wheel bolt caps ✻.

    Alloy wheels ✻: put hub cap on and engage, inserting pin on rear of hub cap into relevant hole in wheel.

    Alloy wheels with anti-theft lock ✻: Put hub cap on. Insert and tighten anti-theft lock ✻.
11. Stow removed wheel, tool kit and warning triangle in the luggage compartment ➪ 171.
12. Check the tyre pressure of the newly mounted wheel.
13. Have the wheel bolt tightening torque (110 Nm) checked.
14. Replace the faulty tyre on the wheel that was removed.

Tyre repair kit ✻

Minor damage to the tyre tread or sidewall can be repaired with the tyre repair kit.

Do not remove the foreign body from the tyre.

Tyre damage exceeding 4 mm or that is on the rim cannot be repaired with the tyre repair kit.

⚠Warning
Do not drive faster than 80 km/h. Do not use the temporary spare wheel for a lengthy period. Steering and handling may be affected.

Important ⇨ 181.

In the event of a flat tyre:

- Switch on the hazard warning flashers, apply the hand brake, engage first gear or reverse.
- Erect warning triangle as specified. Warning triangle ⇨ 171.

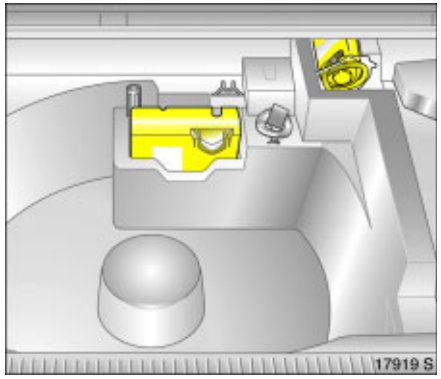

The tyre repair kit is in the stowage compartment beneath the floor cover in the luggage compartment.

1. Remove bag containing tyre repair kit from compartment. Carefully remove parts from bag.
2. Remove the compressor.

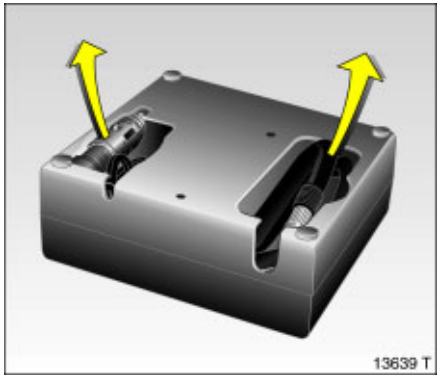

3. Remove the electrical connection cable and air hose from the stowage compartments on the underside of the compressor.

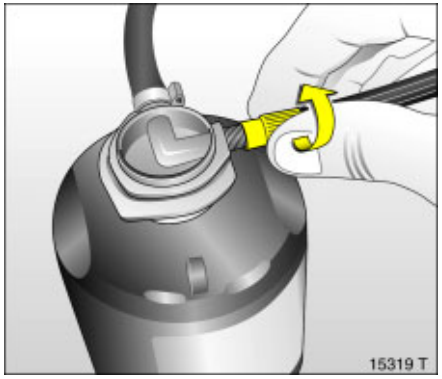

4. Screw the compressor air hose to the connection on the sealant bottle.
5. Fit the sealant bottle in the retainer on the compressor.

   Set the compressor near the tyre in such a way that the sealant bottle is upright.
6. Remove the valve cap from the defective tyre.

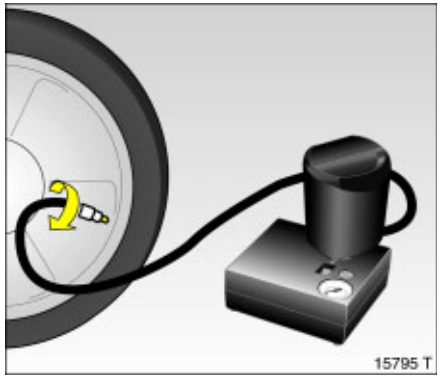

7. Screw the filler hose to the tyre valve.
8. The switch on the compressor must be set to **O**.
9. Plug the compressor connector into the accessory socket or the cigarette lighter socket. For accessory sockets ⇨ 78.

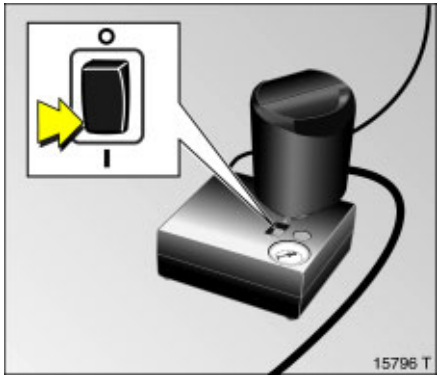

10. Switch on ignition.
11. Set the rocker switch on the compressor to **I**. The tyre is filled with sealant.
12. While the sealant bottle drains (approx. 30 seconds) the pressure indicator on the compressor briefly points to 6 bar. Pressure then sinks again.
13. All of the sealant is pumped into the tyre. Afterwards, the tyre is filled with air.
14. The prescribed tyre pressure should be reached within 10 minutes. Tyre pressure ⇨ 228. Switch off the compressor when the correct pressure is obtained.

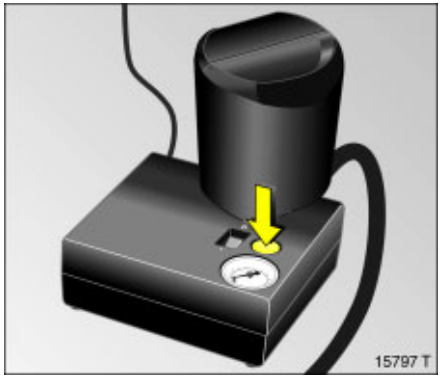

If the prescribed tyre pressure is not obtained within 10 minutes, remove the tyre repair kit. Move the vehicle one tyre rotation. Reattach the tyre repair kit and continue the filling procedure for 10 minutes. If the prescribed tyre pressure is still not obtained, the tyre is too badly damaged. Seek the assistance of a workshop.

Drain excess tyre pressure with the button over the pressure indicator.

Do not operate the compressor for more than 10 minutes, see "Important" ⇨ 181.

15. Detach the tyre repair kit. Screw the filler hose to the free connection on the sealant bottle. This prevents sealant leakage. Stow the tyre repair kit in the luggage compartment.
16. Wipe away any sealant spill with a cloth.
17. Fold away warning triangle, store in luggage compartment ⇨ 171.
18. Stick the label indicating maximum permitted speed somewhere in the driver's field of view.
19. Continue driving immediately to allow the sealant to distribute evenly throughout the tyre. Stop after approx. 10 km (no more than 10 minutes) and check tyre pressure. Screw the compressor air hose directly onto the tyre valve (see Fig. 15798 T).

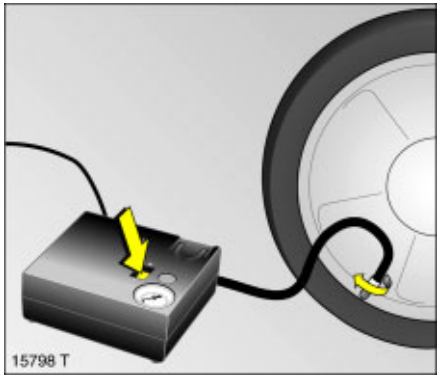

If tyre pressure is more than 1.3 bar, adjust to the prescribed value. Repeat the procedure until there is no more pressure loss.

If the tyre pressure has dropped below 1.3 bar, the vehicle must not be used. Contact a workshop for assistance.

20. Stow tyre repair kit in luggage compartment ⇨ 178.

Important

The driving comfort of the repaired tyre is severely affected, therefore have this tyre replaced.

If the compressor makes abnormal noises or heats up greatly, switch it off for at least 30 minutes.

The integrated safety valve opens at a pressure of 7 bar.

Protect the compressor from moisture and rain.

The sealant can only be stored for approx. 4 years. After this time, the sealing properties can no longer be guaranteed. Heed the expiration date on the sealant bottle.

Replace the used sealant bottle. Dispose of the bottle as prescribed by applicable laws.

The compressor and sealant can be used from approx. -30 □C.

The adapter on the bottom of the compressor can be used to pump up other items such as balls, air beds, inflatable dinghies and so on. Unscrew the air hose and pull the adapter out.

Electrical system

Fuses

Data on the replacement fuse must match the data on the defective fuse.

In the vehicle there are two fuse boxes: in the vehicle interior to the left of the instrument panel, and in the engine bay to the left in front of the windscreen.

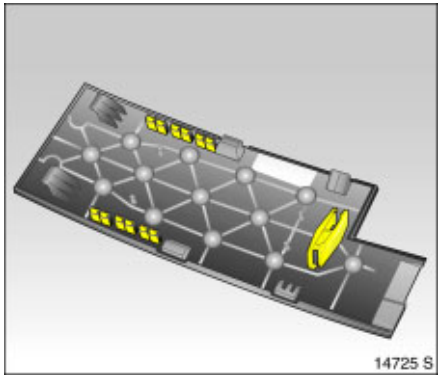

Keep spare fuses in the fuse box lid (shown in yellow in the Fig.). Open lid ⇨ 182.

Before replacing a fuse, turn off the respective switch and the ignition.

A blown fuse can be recognised by its melted wire. Do not replace the fuse until the cause of the fault has been remedied.

To help in replacing fuses, there is a special fuse-gripping tool in the fuse box ✻.

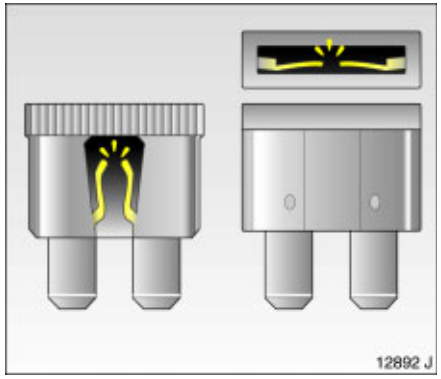

Slot fuse-gripping tool onto fuse and withdraw it.

Some functions are protected by several fuses.

There may be fuses inserted with no function.

Always use fuses with the correct current value. This is shown on each fuse, and is also indicated by the fuse colour and the plug-in location in the fuse box.

Different versions of fuses are used.

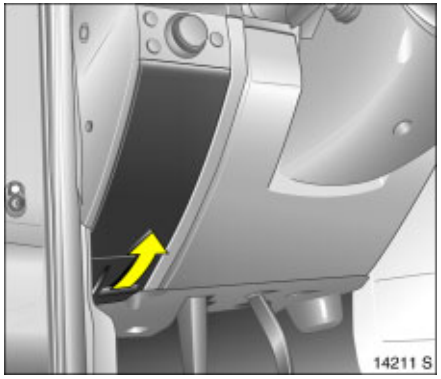

Fuses and the most important circuits they protect

Fuse box in passenger compartment

Disengage fuse box cover at bottom and remove.

No.	Circuit
1	Central control unit
2	Immobiliser, hazard warning lamps, exterior lighting
3	Headlamp washer system

No.	Circuit
4	Infotainment system, diesel engine
5	–
6	–
7	Starter, diesel engine: engine controller
8	Horn
9	Fuel injection system, fuel pump, stationary heater
10	Turn signal lamps
11	Infotainment system, Information display, Infotainment system
12	Heated rear window, exterior mirrors
13	Central locking, anti-theft alarm system
14	Engine control Petrol engine: Diesel engine:
15	Engine control unit, Z 17 DTH engine
16	Accessory socket, cigarette lighter
17	–
18	Adaptive Forward Lighting
19	Central locking system
20	Interior lighting, reading lamp
21	Windscreen washer system
22	Rear electric window
23	Tilt/slide sun roof, skylight roof
24	Anti-theft alarm system
25	Rear window wiper
26	Ignition system, engine electronics
27	Engine control, airbag, ESP®Plus
28	Air conditioning system
29	Front left electric window
30	–
31	Engine control, Z 17 DTH engine
32	Front right electric window
33	Central control module, immobiliser, control indicators
34	Windscreen wipers
35	Interior lighting, interior mirror, information display
36	Brake light, ABS, ESP®Plus
37	Cigarette lighter, auxiliary heater
38	Seat heater (left)
39	Seat heater (right)
40	Adaptive Forward Lighting, automatic headlamp range adjustment
41	Reversing lamps

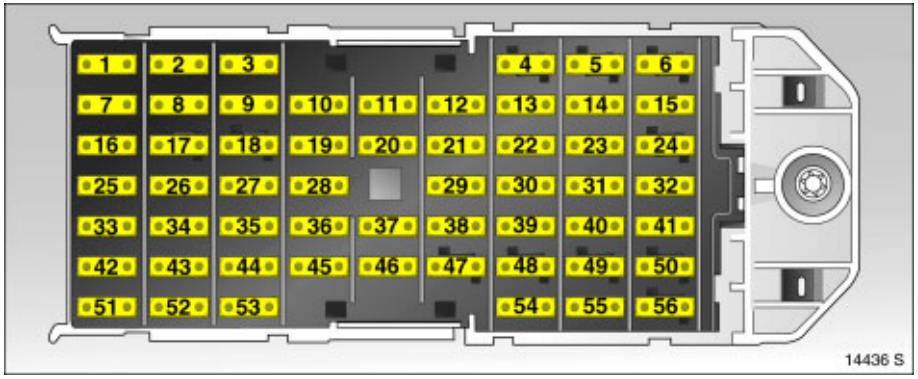

No.	Circuit
42	Engine cooling, lighting
43	Left parking lamp
44	Right parking lamp
45	Fog tail lamp
46	Fog lamps
47	Towing equipment, accessory socket
48	Diesel filter heater
49	–
50	Diesel filter heater

No.	Circuit
51	Left dipped beam: Xenon headlamp Halogen headlamp
52	Right dipped beam: Xenon headlamp Halogen headlamp
53	Sun roof, electric windows, radio
54	Main beam (left)
55	Main beam (right)
56	–

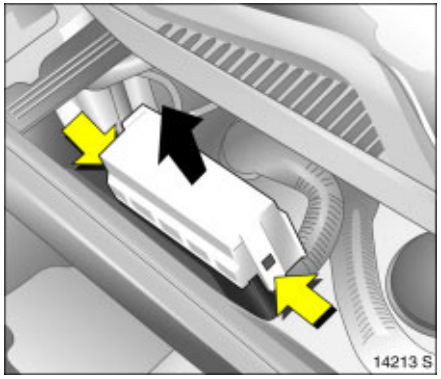

Fuse box in engine compartment
The fuse box is at the front left of the engine compartment.

⚠Warning
Turn off engine before opening fuse box, risk of injury.

Disengage cover of fuse box from lug and lift off.

Some circuits may be protected by several fuses.

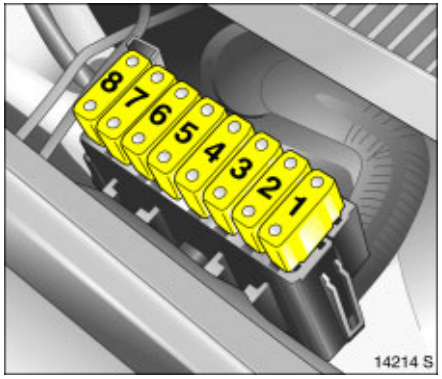

The following fuses are Maxi fuses.

No.	Circuit
1	Interior fan
2	Power steering
3	ABS
4	Easytronic diesel preheating system
5	Heated rear window
6	Engine cooling
7	Starter
8	Engine cooling

Bulb replacement

Switch off the ignition and switch off the relevant switch or close the doors.

Only hold a new bulb at the base! Do not touch the bulb glass with your bare hands.

Replace the bulb, checking that the data on the base matches that of the defective bulb.

To replace a bulb, pull off the relay box on the left side. On the right side, pull off the air hose to the air filter.

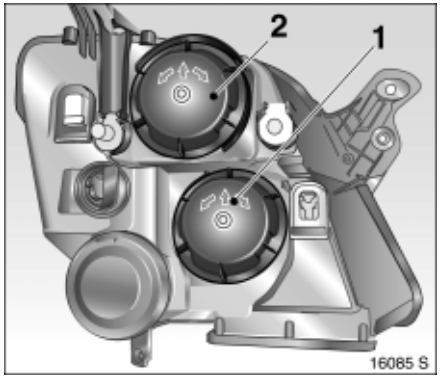

Halogen headlamp system

Headlamp system has separate bulbs for dipped beam **1** (bottom bulbs) and main beam **2** (top bulbs).

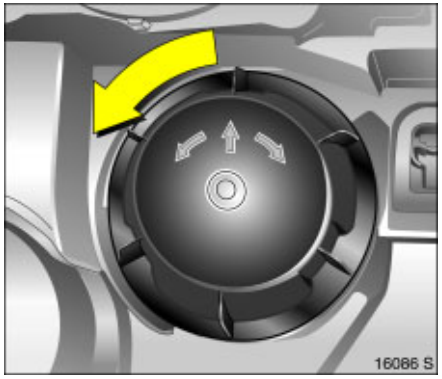

Dipped beam

1. Open bonnet and engage support.
2. Rotate the cap anticlockwise and remove.

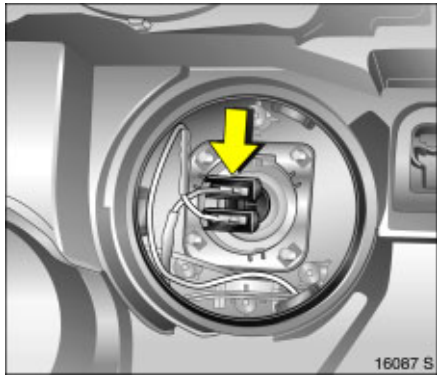

3. Press the bulb down in the holder.
4. Remove bulb with connector from reflector housing.

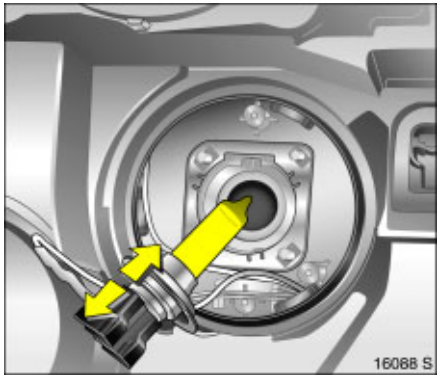

5. Detach plug connector from bulb base.
6. Attach connector to new bulb.
7. Insert the bulb with connector so that the lug engages in the recess in the reflector.
8. Place headlamp protective cover in position and close.

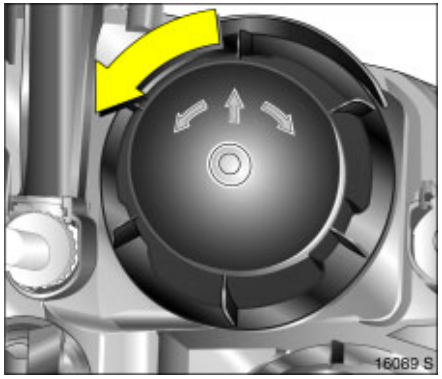

Main beam

1. Open bonnet and engage support.
2. Rotate the cap anticlockwise and remove.

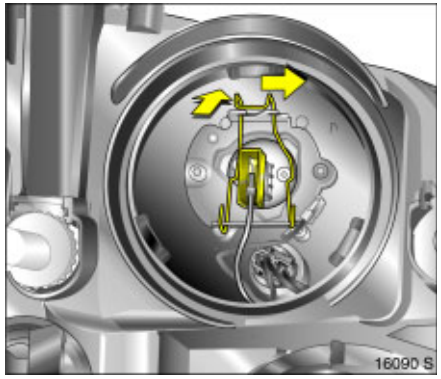

3. Detach plug connector from bulb.
4. Disengage spring wire clip from retaining lugs by moving it forwards and swivel it aside.

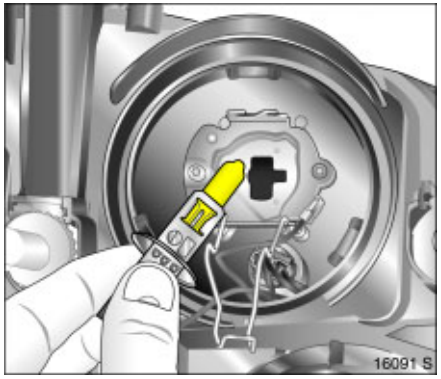

5. Remove bulb from reflector housing.
6. When fitting the new bulb, insert lugs in the reflector recesses.
7. Engage spring wire clip, plug connector onto bulb.
8. Place headlamp protective cover in position and close.

Halogen headlamp system ✻, Adaptive Forward Lighting (AFL)

Halogen headlamp system for dipped and main beam in combination with curve lighting and cornering light.

⚠Warning
The xenon headlamps work with very high electrical voltage. Do not touch. Have bulbs changed by a workshop.

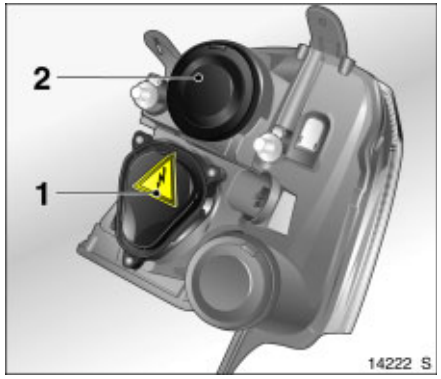

Xenon headlamp system

Headlamp system has separate bulbs for dipped beam **1** (bottom bulbs) and main beam **2** (top bulbs).

Dipped beam

⚠Warning
The xenon headlamps work with very high electrical voltage. Do not touch. Have bulbs changed by a workshop.

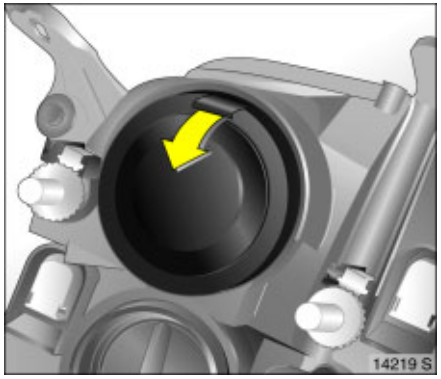

Main beam

1. Open bonnet and engage support.
2. Remove headlamp protective cover.

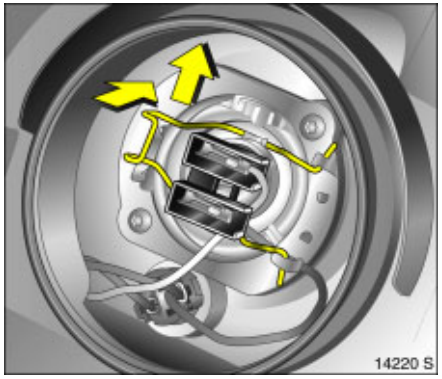

3. Detach plug connector from bulb.
4. Disengage spring wire clip from retaining lug and swivel upward.

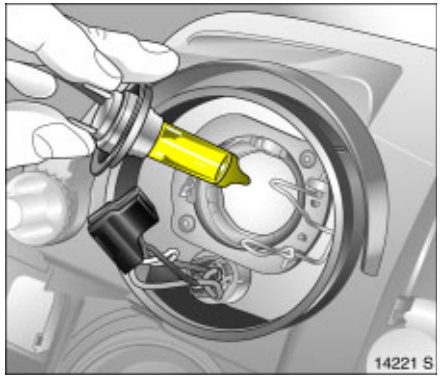

5. Remove bulb from reflector housing.
6. When fitting the new bulb, insert lugs in the reflector recesses.
7. Engage spring wire clip, plug connector onto bulb.
8. Place headlamp protective cover in position and close.

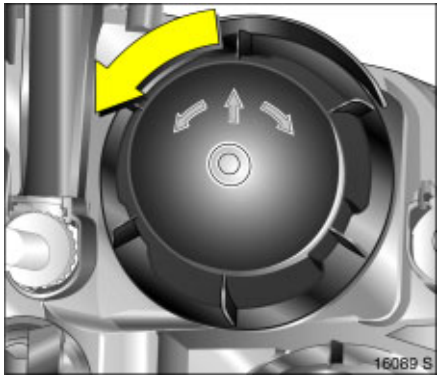

Parking lamps

1. Open bonnet and engage support.
2. Rotate the main beam headlamp cap anticlockwise and remove.

   On vehicles with Xenon headlamps ❇, remove headlamp cover cap ⇨ 188, Fig. 14219 S.

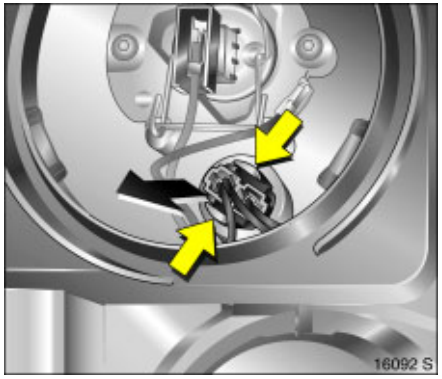

3. Push side lugs of parking lamp holder together and remove holder from reflector.

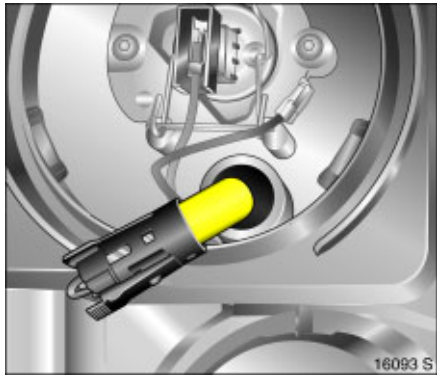

4. Remove bulb from holder.
5. Insert new bulb.
6. Insert bulb socket in reflector.
7. Place headlamp protective cover in position and close.

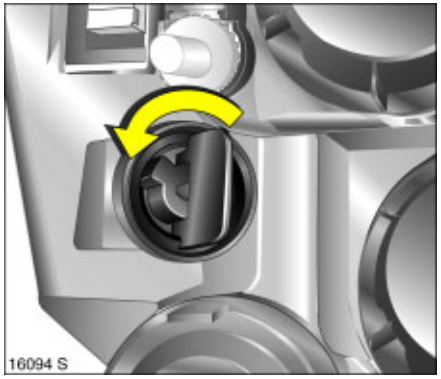

Front indicator lamps

1. Open bonnet and engage support.
2. Rotate left turn signal lamp bulb carrier and disengage.

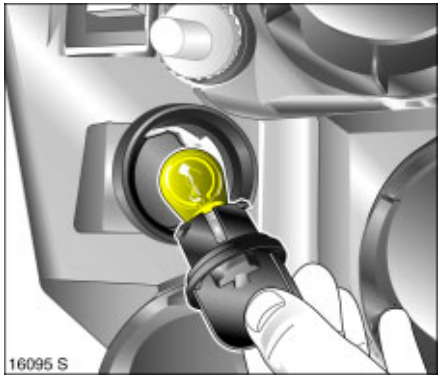

3. Remove bulb mounting from reflector.
4. Detach bulb from bulb mounting.
5. Insert new bulb in bulb holder.
6. Insert new bulb so that the two lugs on the bulb mounting engage in the recesses in the reflector.
7. Rotate bulb carrier to right as far as it will go.

Side turn signal lamps

Have bulb replacement carried out by a workshop.

Fog lamps ✻

Have bulb replacement carried out by a workshop.

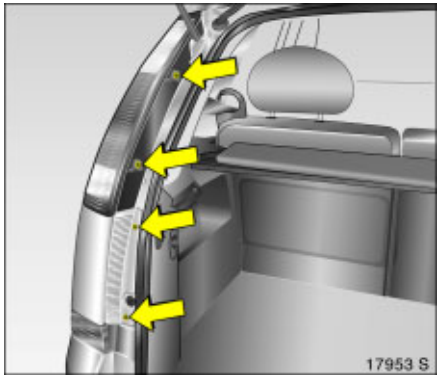

Tail lamps

1. Unscrew the four screws from the bulb housing using a screwdriver ✻.
2. Pull lamp housing, reflector and tail fog lamp out of retainers to rear.

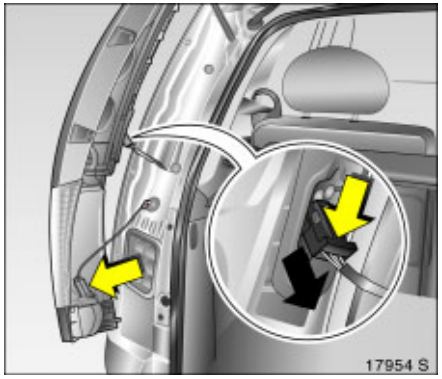

3. Disengage the plug of the main bulb mounting by pressing (arrow in Fig.) and pull from bulb mounting.
4. Disengage lug of fog tail lamp plug ✻ (arrow in Fig.) and remove.

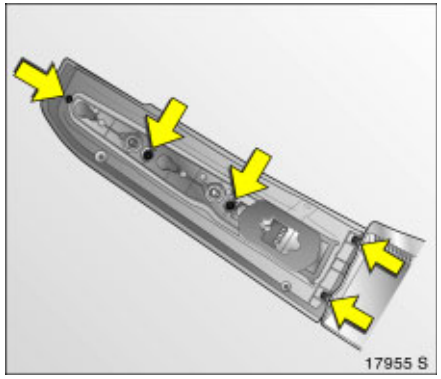

5. Slacken both screws on the back of the main bulb mounting. Press the catches of the bulb mounting together and remove the bulb mounting.

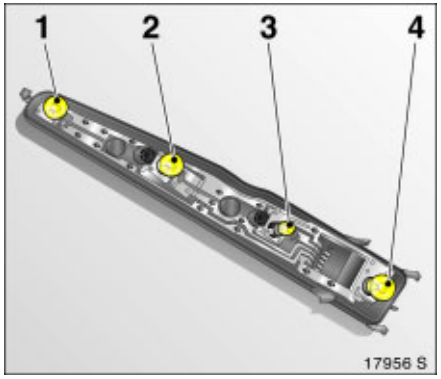

Bulbs in main bulb carrier:

1 = Turn signal lamp
2 = Brake lamp bulb
3 = Tail lamp
4 = Reversing light

Remove bulb from holder.

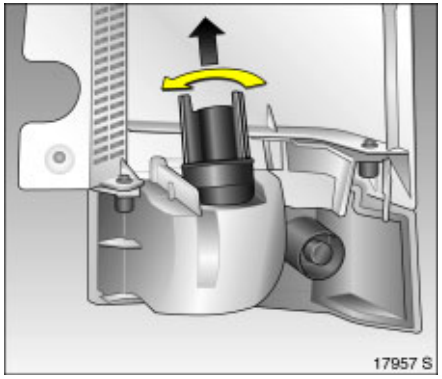

Fog tail lamp bulb: Rotate bulb mounting anticlockwise and disengage.

Remove bulb from holder.

6. Fit new bulbs. Click bulb mounting into housing.
7. Connect both plugs. Insert bulb housing with retaining pins in body and fasten with screws.

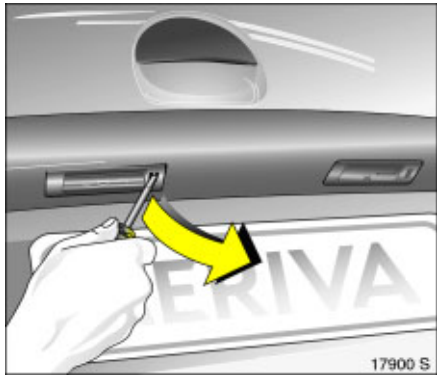

Number plate lamp

1. Insert screwdriver ✻ vertically on right-hand side of bulb housing, exert pressure towards the right and disengage spring. Remove the bulb housing downwards.

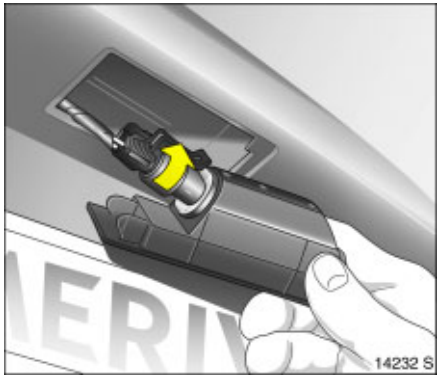

2. Rotate bulb holder to left and disengage.

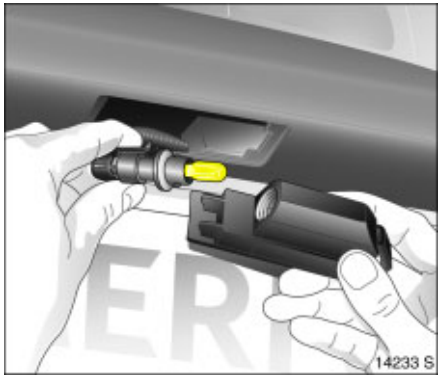

3. Remove bulb from holder.
4. Insert new bulb.
5. Engage bulb holder by rotating right in lamp housing. Insert lamp housing and engage.

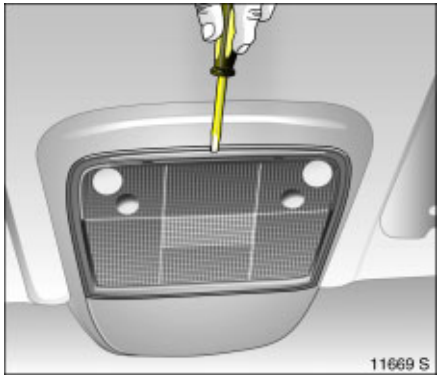

Courtesy lamps

Front courtesy lamp, reading lamps ✻

1. Unclip the scatter disc on the housing at the point shown.

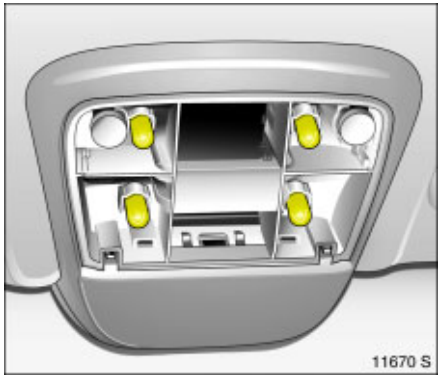

2. Remove bulb from holder.
3. Insert new bulb.
4. Mount lens and engage in position.

Rear courtesy lamp, rear reading lamps ✻
Have bulb replacement carried out by a workshop.

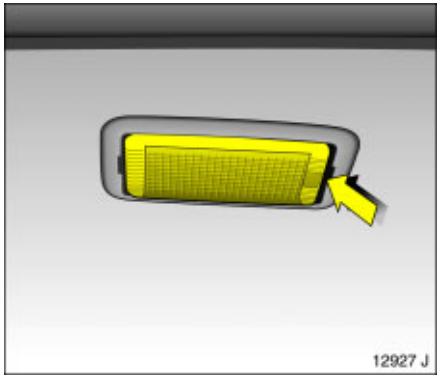

Glove compartment lamp ✻, luggage compartment lamp
1. Prise the lamp out with a screwdriver ✻ and remove.

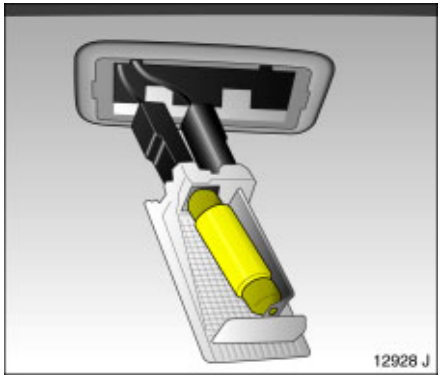

2. Press bulb slightly towards spring clip and remove.
3. Insert new bulb.
4. Insert lamp in opening and engage in position.

Instrument illumination, Information display illumination ❇
Have bulb replacement carried out by a workshop.

Vehicle care

When caring for your vehicle, observe all national environmental regulations, particularly when washing it.

Regular, thorough care helps to improve the appearance of your vehicle and maintain its value over the years. It is also prerequisite for warranty claims for any paint or corrosion damage. The following pages contain tips for vehicle care which, if used properly, will help combat the unavoidable damaging effects of the environment.

Washing
The paintwork of your vehicle is exposed to environmental influences. Wash and wax your vehicle regularly. When using automatic car washes, select a programme that includes waxing.

Bird droppings, dead insects, resin, pollen and the like should be cleaned off immediately, as they contain aggressive constituents which can cause paint damage.

If using a car wash, comply with the car wash operator's instructions. The windscreen wipers and rear window wiper must be switched off. Remove antenna ❇ and roof rack ❇. Stand on the door sill to reach them more easily.

If you wash your vehicle by hand, make sure that the insides of the wings are also thoroughly rinsed out.

Clean edges and folds on opened doors and flaps as well as the areas they cover.

Thoroughly rinse off and leather-off the vehicle. Rinse leather frequently. Use separate leathers for paint and window surfaces: remnants of wax on the windows will impair vision.

Do not use hard objects to remove spots of tar. Use tar removal spray on painted surfaces.

Polishing and waxing
Wax the vehicle regularly (by the time the water no longer beads at the latest). Otherwise, the paintwork will dry out.

Polishing is necessary only if the paint has become dull or if solid deposits have become attached to it.

Paintwork polish with silicone forms a protective film, making waxing unnecessary.

Plastic body parts should not be treated with wax and polish.

Wheels and tyres
Do not use high-pressure jet cleaners.

Clean wheels with a pH-neutral wheel cleaner.

Wheels are painted and can be treated with the same agents as the body.

Paintwork damage
Rectify minor paintwork damage with a touch-up pen before rust forms. Have more extensive damage or rust areas repaired by a workshop.

Exterior lights
Headlamp and other lamp covers are made of plastic. Do not use any caustic agents, do not use an ice scraper, and do not clean them when dry.

Plastic and rubber parts
Plastic and rubber parts can be cleaned with the same cleaner as used to clean the body. Use interior cleaner if necessary. Do not use any other agent. Avoid solvents and petrol in particular. Do not use high-pressure jet cleaners.

Interior and upholstery
Only clean the vehicle interior, including the instrument panel fascia and panelling, with a dry cloth or interior cleaner.

The instrument panel should only be cleaned using a soft damp cloth.

Clean fabric upholstery with a vacuum cleaner and brush. Remove stains with an upholstery cleaner.

Clean seat belts with lukewarm water or interior cleaner.

Caution
Close Velcro fasteners as open Velcro fasteners on clothing could damage seat upholstery.

Windows and windscreen wiper blades
Use a soft lint-free cloth or chamois leather together with window cleaner and insect remover.

When cleaning the rear window, make sure the heating element inside the window is not damaged.

For mechanical removal of ice, use a sharp-edged ice scraper. Press the scraper firmly against the glass so that no dirt can get under it and scratch the glass.

Clean smearing wiper blades with a soft cloth and window cleaner.

Locks
The locks are lubricated with a high-quality locking cylinder grease in the factory. Only use de-icer in urgent cases, since it has a de-greasing effect and affects the operation of the locks. Have the locks re-greased in a workshop after using de-icer.

Engine compartment
Look after areas in the engine compartment that are painted in the same colour as the vehicle like any other paintwork.

It is advisable to wash the engine compartment before and after winter and preserve it with wax. Cover alternator and brake fluid reservoir with plastic sheets before washing the engine.

When washing the engine with a steam-jet cleaner, do not direct the steam jet at components of the Anti-lock Braking System ✻, the automatic air conditioning system ✻ or the belt drive and its components.

After an engine wash, have all engine room components preserved thoroughly by a workshop using protective wax.

Do not use high-pressure jet cleaners.

Underbody
Some areas of the vehicle underbody have a PVC undercoating while other critical areas have a durable protective wax coating.

After the underbody is washed, check the underbody and have more protective wax applied if necessary.

Bitumen/rubber materials could damage the PVC coating. Have underbody work carried out by a workshop.

Before and after winter, wash the underbody and have the protective wax coating checked.

Towing equipment
Do not clean the coupling ball bar with a steam-jet or high-pressure jet cleaner.

Service and maintenance

Scheduled maintenance 199
Service schedule 199
Additional service work..... 206
Recommended fluids and lubricants .. 206
Inspection system 208
Genuine Opel Parts and Accessories .. 209
Performing work 209
Engine oil..... 210
Diesel fuel filter 212
Coolant..... 212
Brakes..... 213
Brake fluid 214
Windscreen wiper replacement..... 215
Windscreen and headlamp washer systems ✻..... 215
Battery..... 216
Protecting electronic components 216
Laying the vehicle up for a long period of time..... 217
Putting the vehicle back into service... 217

Scheduled maintenance

These service intervals apply only under normal driving conditions. If conditions are more arduous ⇨ 206

Service interval display ⇨ 208.

European service intervals
Every 30 000 km or annually, whichever occurs first.

International service intervals
Every 15 000 km or annually, whichever occurs first.

Validation
Service is validated using the spaces provided in the Service and Warranty Booklet. The date of service and kilometre reading are added, stamped and signed by the service workshop.

Ensure that the Service and Warranty Booklet is filled in correctly - an uninterrupted service history is important when making guarantee or goodwill claims, and is also an advantage when selling the vehicle on.

Service schedule

The service schedule applies in the following countries: Andorra, Austria, Belgium, Cyprus, Czech Republic, Denmark, Estonia, Finland, France, Germany, Great Britain, Greece, Greenland, Hungary, Iceland, Ireland, Italy, Latvia, Lithuania, Luxembourg, Malta, Netherlands, Norway, Poland, Portugal, Slovakia, Slovenia, Spain, Sweden, Switzerland.

The international service schedule applies in all other countries.

Service schedule Europe

	Service work after year[1)] / km (x1000)[1)]	1 / 30	2 / 60	3 / 90	4 / 120	5 / 150
	Carry out a visual check of all warning lamps, lighting and signalling devices, check steering and ignition locks	x	x	x	x	x
	Remote control: replace batteries (check spare key)	every 2 years				
	Check windscreen wipers, windscreen washer and headlamp washer systems, adjust if necessary.	x	x	x	x	x
	Check coolant and antifreeze (bright orange) levels[2)], adjust if necessary, note antifreeze temperature in Service and Warranty Booklet (validation fields).	x	x	x	x	x
	Check water-carrying hoses for leaks and make sure that they are secure.	x	x	x	x	x
	Check break fluid level[2)], top up if necessary.	x		x		x
	Check that the battery terminals and lugs are secure	x	x	x	x	x
	Vehicle system check using TECH 2	x	x	x	x	x
	Replace pollen filter or active charcoal filter		x		x	
⊕●	If the air is particularly polluted, full of dust or sand or pollen, if the air conditioning system smells	Discussion between customer / Opel Partner				
	Replace air cleaner element	every 4 years/60 000 km				
⊕	Replace spark plugs	every 4 years/60 000 km				
	Make a visual check of the ribbed belt		x		x	
⊕	Replace ribbed belt Z 13 DT, Z 13 DTJ, Z 17 DTH, Z 17 DT, Z 17 DTR.	every 10 years/150 000 km				
⊕	Check valve clearance, adjust if necessary Z 16 LET, Z 16 XEP, Z 17 DTH, Z 17 DT, Z 17 DTR	every 10 years/150 000 km				

1) Depending on what occurs first.
2) If the loss is too great or there are leaks, carry out remedial work in agreement with the customer.

⊕ additional work.
● The intervals are shorter where driving conditions are more arduous or country-specific.

	Service work after year[1)] km (x 1000)[1)]	1 30	2 60	3 90	4 120	5 150
⊕	Replace timing belt and tension pulley					
	Z 18 XE	every 6 years/90 000 km				
	Z 17 DTH	every 10 years/90 000 km				
	Z 16 LET, Z 16 XEP, Z 17 DTR, Z 17 DTR	every 10 years/150 000 km				
	Change engine oil and replace filter	x	x	x	x	x
⊕●	Drain water from fuel filter, diesel (if the air humidity is high or the fuel of lower quality)	x	x	x	x	x
	Replace fuel filter and drain water, diesel (grade EN 590) Z 13 DTJ, Z 17 DTH		x		x	
	Replace fuel filter, petrol (grade EN 228), outer Z 16 LET	every 4 years/60 000 km				
	Check handbrake, adjust if necessary (unladen wheels); carry out a visual check of wheel suspension and suspension front and rear, brake lines, brake pressure hose, fuel lines and exhaust system		x		x	
	Check external bodywork / underseal, note any damage in the Service and Warranty Booklet.	x	x	x	x	x
⊕●	Carry out a visual check on the front and rear wheel brakes[2)]		x		x	
	Annual service check if the annual distance travelled is greater than 20 000 km.					
	Carry out a visual check of the engine, transmission (AT, MT), check air conditioning compressor for leaks[2)]	x	x	x	x	x

[1)] Depending on what occurs first.
[2)] If the loss is too great or there are leaks, carry out remedial work in agreement with the customer.
⊕ additional work.
● The intervals are shorter where driving conditions are more arduous or country-specific.

	Service work after year[1)] km (x1000)[1)]	1 30	2 60	3 90	4 120	5 150
⊕●	Remove brake drum, clean, carry out visual check	every 4 years/60 000 km				
	Visually inspect steering system boots, track rods, final drive	x	x	x	x	x
	Check track rod end and supporting ball joint	x	x	x	x	x
⊕	Change brake and clutch fluids (manual transmission automated)	every 2 years				
	Loosen wheel mountings and tighten to 110 Nm		x		x	
	Grease or apply oil to bolt taper when fitting.					
	Check tyre condition and pressure (including spare wheel), correct if necessary.					
	If there is a tyre inflation system, check that the set is complete and the use-by date is still valid. Replace sealant bottle every four years.					
⊕	Annual service check if the annual distance travelled is greater than 20 000 km.					
	Visually check the first aid kit (that it is where it should be, that it is undamaged and that the use by date is still valid), lashing eyes and warning triangle	every 2 years				
	Check headlamp settings (including auxiliary headlamps), adjust if necessary		x		x	
	Lubricate door hinges, check arms, cylinder lock, door latch, bonnet catch, rear panel hinge		x		x	
	Test run, final check (check steering and ignition lock, instrument and warning lamps, entire brake system, steering, air conditioning system, engine, bodywork and chassis, reset service/interval display with TECH 2.	x	x	x	x	x
⊕	Germany only: carry out emissions check, main inspection	First time after three years, then every 2 years				
	If used commercially to transport passengers, taxis, ambulances, hire cars etc	annually				

[1)] Depending on what occurs first.
⊕ additional work.
● The intervals are shorter where driving conditions are more arduous or country-specific.

International service schedule

	Service work after year[1)] km (x 1000)[1)]	1 15	2 30	3 45	4 60	5 75
	Carry out a visual check of all warning lamps, lighting and signalling devices, check steering and ignition locks	x	x	x	x	x
	Remote control: replace batteries (check spare key)	every 2 years				
	Check windscreen wipers, windscreen washer and headlamp washer systems, adjust if necessary.	x	x	x	x	x
	Check coolant and antifreeze (bright orange) levels[2)], adjust if necessary, note antifreeze temperature in Service and Warranty Booklet (validation fields).	x	x	x	x	x
	Check water-carrying hoses for leaks and make sure that they are secure.	x	x	x	x	x
	Check break fluid level[2)], top up if necessary.	x		x		x
	Check that the battery terminals and lugs are secure	x	x	x	x	x
	Vehicle system check using TECH 2	x	x	x	x	x
	Replace pollen filter or active charcoal filter		x		x	
⊕●	If the air is particularly polluted, full of dust or sand or pollen, if the air conditioning system smells	Discussion between customer / Opel Partner				
	Replace air cleaner element	every 4 years/60 000 km				
⊕	Replace spark plugs	every 4 years/60 000 km				
	Make a visual check of the ribbed belt		x		x	
⊕	Replace ribbed belt Z 13 DT, Z 13 DTJ, Z 17 DTH, Z 17 DT, Z 17 DTR.	every 10 years/150 000 km				
⊕	Check valve clearance, adjust if necessary Z16 LET, Z 16 XEP, Z 17 DTH, Z 17 DT, Z 17 DTR	every 10 years/150 000 km				

1) Depending on what occurs first.
2) If the loss is too great or there are leaks, carry out remedial work in agreement with the customer.

⊕ additional work.
● The intervals are shorter where driving conditions are more arduous or country-specific.

	Service work after year[1)] km (x 1000)[1)]	1 15	2 30	3 45	4 60	5 75
⊕	Replace timing belt and tension pulley					
	Z 18 XE	every 6 years/90 000 km				
	Z 17 DTH	every 10 years/90 000 km				
	Z 16 LET, Z 16 XEP, Z 17 DTR, Z 17 DTR	every 10 years/150 000 km				
	Change engine oil and replace filter	x	x	x	x	x
⊕●	Drain water from fuel filter, diesel (if the air humidity is high or the fuel of lower quality)	x	x	x	x	x
	Replace fuel filter and drain water, diesel (grade EN 590) Z 13 DTJ, Z 17 DTH		x		x	
	Replace fuel filter, petrol (grade EN228), outer Z 16 LET	every 4 years/60 000 km				
	Check handbrake, adjust if necessary (unladen wheels); carry out a visual check of wheel suspension and suspension front and rear, brake lines, brake pressure hose, fuel lines and exhaust system		x		x	
	Check external bodywork / underseal, note any damage in the Service and Warranty Booklet.	x	x	x	x	x
⊕●	Carry out a visual check on the front and rear wheel brakes[2)]		x		x	
	Annual service check if the annual distance travelled is greater than 20 000 km.					
	Carry out a visual check of the engine, transmission (AT, MT), check air conditioning compressor for leaks[2)]	x	x	x	x	x

1) Depending on what occurs first.
2) If the loss is too great or there are leaks, carry out remedial work in agreement with the customer.
⊕ additional work.
● The intervals are shorter where driving conditions are more arduous or country-specific.

	Service work after year[1)] km (x 1000)[1)]	1 15	2 30	3 45	4 60	5 75
⊕●	Remove brake drum, clean, carry out visual check	every 4 years/60 000 km				
	Visually inspect steering system boots, track rods, final drive	x	x	x	x	x
	Check track rod end and supporting ball joint	x	x	x	x	x
⊕	Change brake and clutch fluids (manual transmission automated)	every 2 years				
	Loosen wheel mountings and tighten to 110 Nm		x		x	
	Grease or apply oil to bolt taper when fitting.					
	Check tyre condition and pressure (including spare wheel), correct if necessary.					
	If there is a tyre inflation system, check that the set is complete and the use-by date is still valid. Replace sealant bottle every four years.					
⊕	Annual service check if the annual distance travelled is greater than 20 000 km.					
	Visually check the first aid kit (that it is where it should be, that it is undamaged and that the use by date is still valid), lashing eyes and warning triangle	every 2 years				
	Check headlamp settings (including auxiliary headlamps), adjust if necessary		x		x	
	Lubricate door hinges, check arms, cylinder lock, door latch, bonnet catch, rear panel hinge		x		x	
	Test run, final check (check steering and ignition lock, instrument and warning lamps, entire brake system, steering, air conditioning system, engine, bodywork and chassis, reset service/interval display with TECH 2.	x	x	x	x	x

[1)] Depending on what occurs first.
⊕ additional work.
● The intervals are shorter where driving conditions are more arduous or country-specific.

Additional service work

Additional work ⊕
Additional work is not always necessary at each service, but can be carried out at the same time as a regular service.

The cost of this type of work is not included in the charge for a regular service and will be invoiced separately. It is, however, more cost-effective to have this work done at the same time as a scheduled service rather than have it done separately.

Hard driving conditions ●
Conditions are considered hard when one or more of the following situations occurs more frequently:

- cold start,
- stop and go,
- caravan/trailer towing,
- inclines or steep climbs,
- poor road conditions,
- sand and dust,
- extreme temperature fluctuations.

Police vehicles, taxis and driving school vehicles are classified as being subjected to hard driving conditions.

With hard driving conditions it might be necessary to carry out certain service work more frequently than the scheduled intervals.

We recommend seeking technical advice with regard to servicing requirements for your particular driving circumstances.

Recommended fluids and lubricants

Only use products which have been tested and approved. Damage caused by using operating materials which have not been approved is not covered by the guarantee.

⚠Warning

Operating materials are dangerous and must be handled carefully. If swallowed, seek medical help immediately. Do not breath in fumes and avoid contact with the skin. Keep away from children. These materials are forbidden to contaminate waste water, surface water, groundwater or soil. Dispose of empty containers correctly. Always remember that operating materials are dangerous.

Engine oil
Engine oil is graded by quality and viscosity. When choosing an engine oil, the quality grade is more important than the viscosity.

Engine oil for Service schedule Europe

GM-LL-A-025:	Petrol engines
GM-LL-B-025:	Diesel engines

GM	General Motors Europe
LL	Long life
A or B	Details of engine oil grade
025	Validity code

Opel engine oil is GM-LL-A-025 and GM-LL-B-025 grade and therefore suitable for both petrol and diesel engines.

Engine oil for International service schedule

ACEA-A3:	Petrol engines
ACEA-B4:	Diesel engines without diesel particulate filter
ACEA-C3	Diesel engines with diesel particulate filter

Engine oil: top up
Oils from different manufacturers and different brands of oil can be mixed as long as the grades (quality and viscosity) are the same.

Not all the engine oils available on the market are of a suitable quality. Always check that the required specification and classification are given on the cans.

If engine oil of a suitable quality cannot be obtained, use no more than 1 litre of category ACEA A3/B4 or A3/B3 (once between two oil changes). The viscosity must be suitable for requirements.

It is forbidden to use engine oil of grades ACEA A1/B1 and A5/B5. Under certain circumstances, these oils can cause long-term damage to the engine.

Engine oil additives
The use of motor oil additives can lead to damage and will invalidate the guarantee.

Engine oil viscosity
Only use engine oils with viscosity grades 0W-30, 0W-40, 5W-30 or 5W-40.

The SAE viscosity grading system indicates the oil's flowability. Oil is more viscous when cold than when warm.

Multigrade oil has two numbers. The first, followed by a W, indicates the viscosity at low temperatures and the second indicates the viscosity at high temperatures.

Inspection system

In order to guarantee economical and safe vehicle operation and to maintain the value of your vehicle, it is of vital importance that all maintenance work is carried out at the proper intervals.

Fixed service interval
When service is due, **InSP** appears in the odometer display for approximately 10 seconds when the ignition is switched on. Have the next service performed by a workshop within one week or 500 km (whichever occurs first).

The service interval display takes account of off-the-road periods during which the battery is disconnected.

Flexible service interval ❇
The length of the service intervals is based on several parameters stemming from usage. For this reason, various engine-specific data is continually gathered and is used to calculate the remaining distance until the next service.

If the remaining distance is less than 1500 km, **InSP** is displayed with a remaining distance of 1000 km when the ignition is switched on and off. If less than 1000 km remains, **InSP** is displayed for several seconds. Have the next service performed by a workshop within one week or 500 km (whichever occurs first).

Display of remaining distance:

1. Switch off ignition.
2. Briefly press the trip odometer reset button. The odometer reading is shown.
3. Press and hold the reset button for about 2 seconds. **InSP** and the remaining distance are displayed.

Further information on maintenance and the inspection system can be found in the Service and Warranty Booklet, which is in the glove compartment.

Have maintenance work – and repair work on the body and the equipment – carried out professionally by a workshop. We recommend using your Opel partner, who has excellent knowledge of Opel vehicles and has the necessary special tools and up-to-date service instructions from Opel. It is particularly advisable to use an Opel Partner during the warranty period in order to prevent loss of warranty. Further information can be found in the Service and Warranty Booklet.

Separate anti-corrosion service
Have this work done at the intervals given in the Service and Warranty Booklet.

Genuine Opel Parts and Accessories

We recommend that you use "Genuine Opel Parts and Accessories" and conversion parts released expressly for your vehicle type. These parts have undergone special tests to establish their reliability, safety and specific suitability for Opel vehicles. Despite continuous market monitoring, we cannot assess or guarantee these attributes for other products, even if they have been granted approval by the relevant authorities or in some other form.

"Genuine Opel Parts and Accessories" and conversion parts approved by Opel can be obtained from your Opel Partner, who can provide expert advice on permitted technical changes and ensure correct installation.

Performing work

To avoid injury from moving parts and cables conducting ignition voltage, only carry out engine compartment checks (e. g. checking brake fluid or engine oil level) when the ignition is switched off.

⚠Warning

Only perform engine compartment checks when the ignition is off.

The cooling fan may start operating even if the ignition is off.

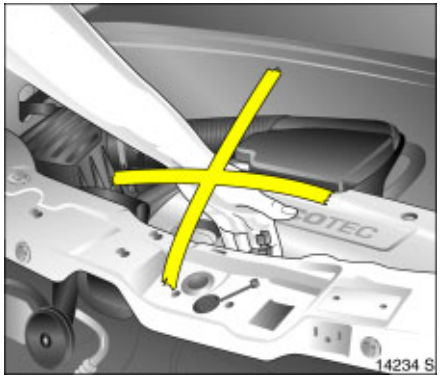

⚠Warning

The ignition system ✻ and Xenon headlamps ✻ use extremely high voltage. Do not touch.

To aid identification, the caps to be removed for topping up engine oil, coolant and washer fluid and the dipstick handle may be coloured yellow.

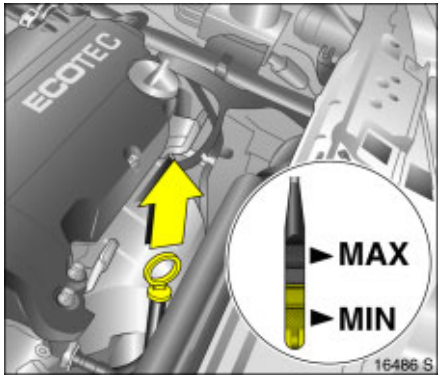

Engine oil

In vehicles fitted with engine oil level monitoring ✻, the engine oil level is checked automatically ⇨ 85. We recommend checking the engine oil level before embarking on long journeys.

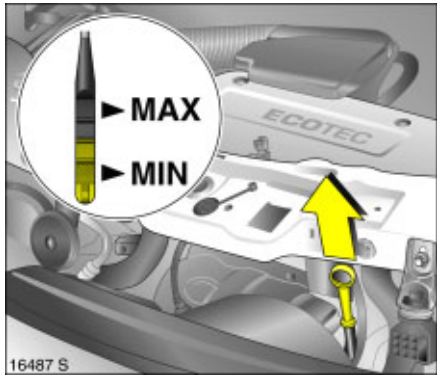

Check with the vehicle on a level surface. The engine must be at operating temperature and switched off for at least 5 minutes.

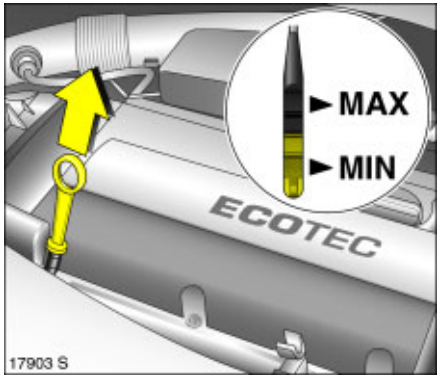

Pull out the dipstick, wipe it clean, insert it to the stop on the handle, pull out and read the engine oil level.

Push the dipstick in as far as it will go and twist it by half a turn.

Different dipsticks are used depending on engine variant.

When the engine oil level has dropped to the **MIN** mark, top up engine oil.

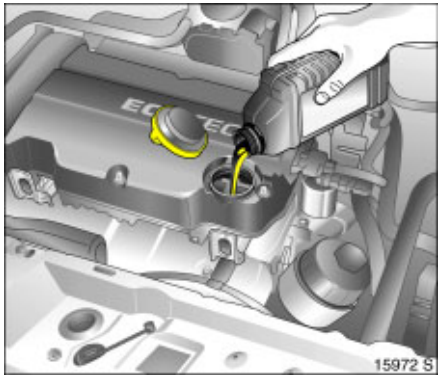

We recommend that you use the same engine oil as was used the last time it was topped up.

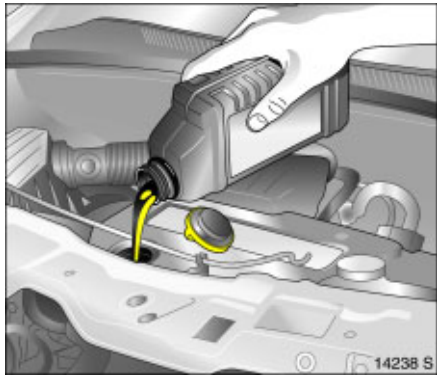

The engine oil level must not exceed the **MAX** mark on the dipstick.

Caution
If there is too much engine oil, the excess must be drained or suctioned out.

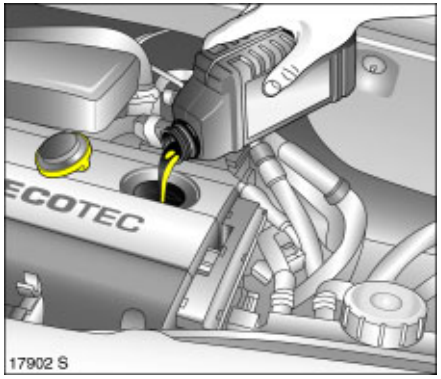

The amount filled must be between the **MIN** and **MAX** marks ⇨ 230.

Fit the cap on straight and tighten it.

Diesel fuel filter

On the event of engine oil change, have fuel filter checked for possible water residue by a workshop.

Illumination of indicates water in the fuel filter ❄.

Have fuel filter checked at shorter intervals if the vehicle is subjected to extreme operating conditions such as high humidity (primarily in coastal areas), extremely high or low outside temperatures and substantially varying daytime and night-time temperatures.

Coolant

The coolant provides anti-freeze protection down to approx. -28 □C.

Caution

Only use approved anti-freeze.

Coolant additives used to give additional protection against corrosion and prevention against small leaks can lead to functional problems. No liability is accepted for damage caused by using coolant additives.

⚠Warning

Antifreeze is a danger to health; it must therefore be kept in the original container and out of the reach of children.

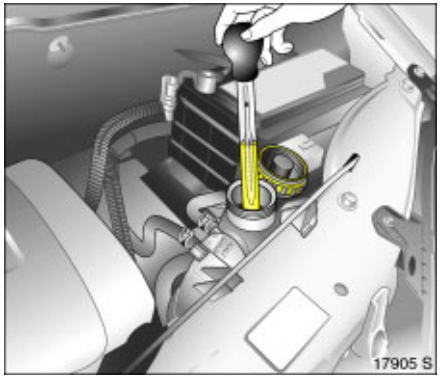

Antifreeze and corrosion protection

Have the concentration of the radiator contents tested by a workshop before winter starts. The amount of antifreeze must provide protection down to approx. -28 □C. A lower antifreeze concentration will reduce the amount of protection from frost and corrosion. Add antifreeze if necessary.

If coolant loss is topped up with water, have concentration checked and add antifreeze if necessary.

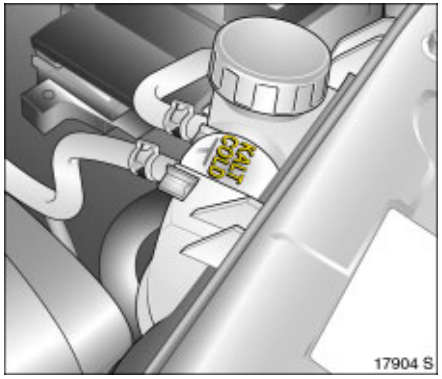

Coolant level
In a closed cooling system, there is hardly any loss.

If the cooling system is cold, the coolant should lie above the **KALT/COLD** mark. Top up if the level is low.

⚠Warning
Allow the engine to cool before opening the cap. Carefully open the cap, relieving the overpressure slowly.

Top up with anti-freeze. If no anti-freeze is available, fill with clean tap water or distilled water. Have the anti-freeze concentration checked.

Have the cause of coolant loss rectified by a workshop.

Caution
Too low a coolant level can cause engine damage.

Fit the cap on straight and tighten it.

Brakes

A screeching noise indicates that the brake lining is at its minimum thickness. Continued driving is possible. Have the brake lining replace as soon as possible.

Once new brake lining is fitted, do not brake unnecessarily hard for the first 200 km.

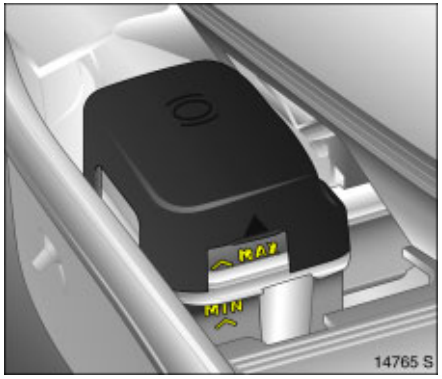

Brake fluid

⚠Warning
Brake fluid is poisonous and corrosive. Do not allow it to come into contact with eyes, skin, fabrics or painted surfaces.

The brake fluid level must be between the **MIN** and the **MAX** marks.

When topping up, ensure maximum cleanliness as contamination of the brake fluid can lead to function problems in the braking system.

Only use approved high performance brake fluids. Only use brake fluid DOT4.

After correcting the brake fluid level, have the cause of the loss of brake fluid remedied by a workshop.

Brake fluid change
Brake fluid is hygroscopic, i.e. it absorbs water. If the brakes become hot, such as when driving on long downhill stretches, vapour bubbles can occur in the water, which can have an extremely adverse effect on braking power (depending on the proportion of water).

Keep to the specified intervals.

⚠Warning
Have the brake fluid change performed by a workshop. Please comply with the legal environmental and health regulations – concerning the disposal of brake fluid.

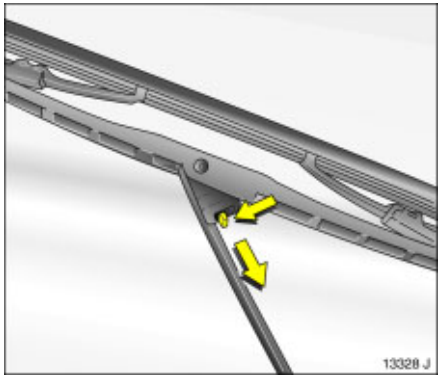

Windscreen wiper replacement

Wiper blades on the windscreen

Lift wiper arm. Move release lever and detach wiper blade.

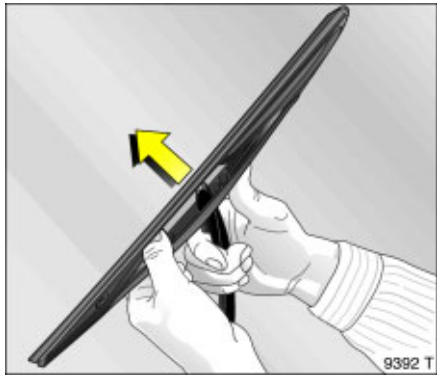

Wiper blade on the rear window ✻

Lift wiper arm. Disengage wiper blade as shown in illustration and remove.

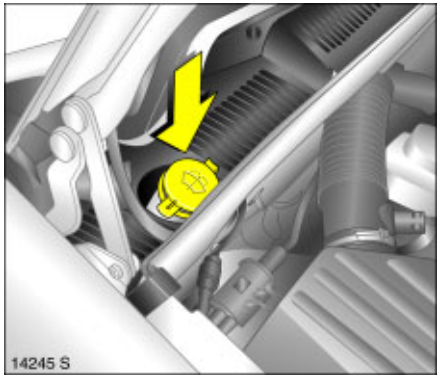

Windscreen and headlamp washer systems ✻

Reservoir for windscreen washing system and rear window washing system in engine compartment beneath the right-hand windscreen wiper.

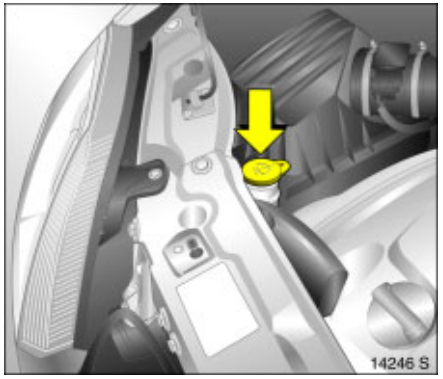

In vehicles with headlamp washing system ❇ Opening for refilling is in engine compartment behind the right-hand headlamp.

Fill with clean water mixed with cleaner and anti-freeze.

Make sure there is sufficient anti-freeze protection.

When closing the reservoir, press the lid firmly over the beaded edge all the way round.

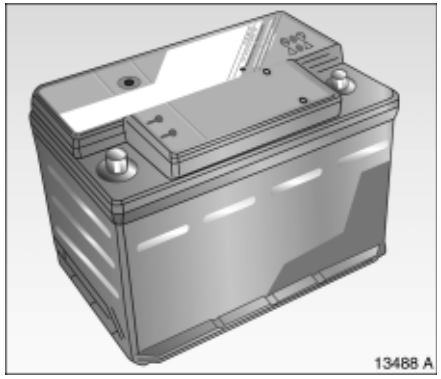

Battery

The vehicle battery is maintenance-free.

Batteries do not belong in household waste. They must be disposed of at an appropriate recycling collection point.

The retrofitting of electrical or electronic accessories may subject the battery to additional loading and cause it to become discharged. Please seek advice concerning the technical options, such as installing a more powerful battery.

Laying up the vehicle for more than 4 weeks can lead to battery discharge. Disconnect the negative terminal of the vehicle battery.

Ensure the ignition is switched off before connecting or disconnecting the vehicle battery.

Protecting electronic components

In order to prevent faults in electronic components in the electrical system, never connect or disconnect battery with engine running or ignition switched on. Never start engine with battery disconnected, e.g. when starting using jump leads.

To avoid damaging the vehicle, do not make any modifications to the electrical system, e. g. connecting additional consumers or tampering with electronic control units (chip tuning).

⚠Warning
Electronic ignition systems generate very high voltages. Do not touch the ignition system; high voltage can be fatal.

Laying the vehicle up for a long period of time

If the vehicle is to be laid up for several months, the following work should be undertaken to prevent damage.

- Wash and wax the vehicle ⇨ 196.
- Have the wax in the engine compartment and underbody checked.
- Clean and preserve rubber seals.
- Change engine oil.
- Check antifreeze and corrosion protection ⇨ 212.
- Check coolant level, add antifreeze if necessary ⇨ 213.
- Empty windscreen washer system and headlamp washer system.
- Increase tyre pressure to value given for full load ⇨ 228.
- Park vehicle in dry and well ventilated place. Select first gear or reverse gear, and with manual transmission automated ❇ move selector lever to middle position before switching ignition off. Use wedges or something similar to prevent vehicle from rolling.
- Do not apply hand brake.
- Disconnect the clamp from the negative terminal of the vehicle battery.

Putting the vehicle back into service

Perform the following work before recommissioning the vehicle:

- Connect the clamp to the negative terminal of the vehicle battery.
- Check tyre pressure ⇨ 228.
- Top up windscreen washer system ⇨ 215.
- Check engine oil level ⇨ 210.
- Check coolant level ⇨ 213.
- Fit the number plate if necessary.

Technical Data

Vehicle data 218
Engine data 220
Performance 222
Fuel consumption, CO_2 -emissions 224
Weights, payload and roof load 226
Tyres 228
Capacities 230
Dimensions 231
Mounting dimensions of towing equipment ✻ 232

Vehicle data

The technical data is determined in accordance with European Community standards. We reserve the right to make modifications. Specifications in the vehicle documents always have priority over those given in this manual.

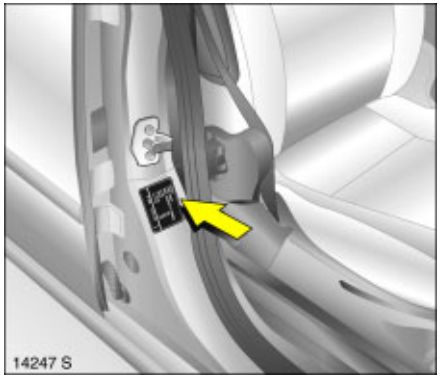

The identification plate is affixed to the front right door frame.

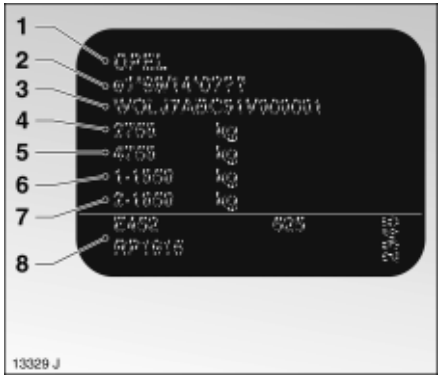

Information on identification plate:

1 Manufacturer
2 Type approval number
3 Vehicle identification number
4 Gross vehicle weight rating
5 Permissible gross train weight
6 Maximum permissible front axle load
7 Maximum permissible rear axle load
8 Vehicle-specific or country-specific data

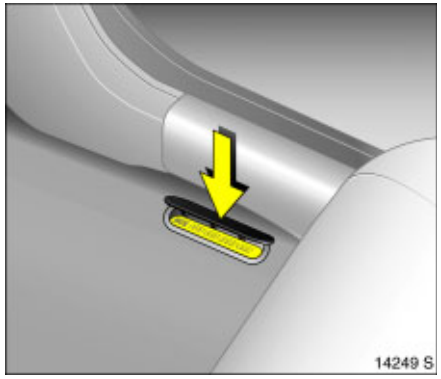

The vehicle identification number is stamped on the identification plate and on the right side of the floor of the vehicle under a cover between the front door and the seat.

The vehicle identification number may be attached to the instrument panel.

Engine identifier and engine number: marked on left-hand side of engine in engine block.

Engine data

Sales designation **Engine identifier code**	1.4 TWINPORT **Z 14 XEP**	1.6 TWINPORT **Z 16 XEP**	1.8 **Z 18 XE**	OPC **Z 16 LET**
Number of cylinders	4	4	4	4
Piston displacement [cm^3]	1364	1598	1796	1598
Brake horse power [kW/bhp] at rpm	66 5600	77 6000	92 6000	132 5500
Torque [Nm] at rpm	125 4000	150 3900	165 4600	230 2200-5500
Fuel type[1)]	Petrol	Petrol	Petrol	Petrol
Octane rating RON[2)] recommended possible possible	 **95 (P)**[3)] 98 (PP)[3)] 91 (R)[3)4)]	 **95 (P)**[3)] 98 (PP)[3)] 91 (R)[3)4)]	 **95 (P)**[3)] 98 (PP)[3)] 91 (R)[3)4)]	 95 (S)[3)5)] **98 (SP)**[3)] –[6)]
Max. permissible engine speed, continuous operation (rpm) approx.	6200	6500	6500	6500
Oil consumption [l/1000 km]	0.6	0.6	0.6	0.6

1) Standard quality fuels, e.g. unleaded DIN EN 228.
2) Standard quality fuels: N = Normal, S = Super, SP = Super Plus; bold type: recommended fuel.
3) Knock control system automatically adjusts ignition timing according to type of fuel used (octane number).
4) Use of 91 RON fuel - lower power and torque and increased fuel consumption.
5) Use of 95 RON fuel - lower power and torque and increased fuel consumption.
6) 91 RON fuel must not be used.

Engine data

Sales designation **Engine code**	1.3 CDTI **Z 13 DTJ**	1.7 CDTI **Z 17 DT**	1.7 CDTI **Z 17 DTH**	1.7 CDTI **Z 17 DTR**
Number of cylinders	4	4	4	4
Piston displacement [cm^3]	1248	1686	1686	1686
Brake horse power [kW/bhp] at rpm	55 4000	74 4000	74 4400	92 4000
Torque [Nm] at rpm	170 1750 to 2500	260 2000	240 2300	280 2300
Fuel type[1)]	Diesel	Diesel	Diesel	Diesel
Cetane requirement [CN][2)]	**49 (D)[3)]**	**49 (D)**[3)]	**49 (D)**[3)]	**49 (D)**[3)]
Max. permissible engine speed, continuous operation (rpm) approx.	5100 to 5300	4730	4730	4730
Oil consumption [l/1000 km]	0.6	0.6	0.6	0.6

1) Standard quality fuels, e.g. diesel DIN EN 590.
2) Standard quality fuels: D = diesel, bold type: recommended fuel
3) A lower value is possible with winter diesel fuels.

Performance

	Z 14 XEP	Z 16 XEP	Z 18 XE	Z 16 LET
Top speed[1] [km/h]				
5-speed transmission	168	181	190	–
5-gear sport transmission	–	–	–	–
6-speed transmission	–	–	–	222
manual transmission automated	–	181	190	–

[1] The maximum speed indicated is achievable at kerb weight (without driver) plus 200 kg payload. Optional equipment could reduce the specified maximum speed of the vehicle.

Performance

	Z 13 DTJ	Z 17 DT	Z 17 DTH	Z 17 DTR
Top speed[1] [km/h]				
5-speed manual transmission	157	–	178	–
6-speed manual transmission	–	180	–	195
manual transmission automated	–	–	–	–

[1] The maximum speed indicated is achievable at kerb weight (without driver) plus 200 kg payload. Optional equipment could reduce the specified maximum speed of the vehicle.

Fuel consumption, CO_2-emissions

Directive 80/1268/EEC (last changed by 2004/3/EC) has applied for the measurement of fuel consumption since 1996.

The directive is oriented to actual driving practices: Urban driving is rated at approx. $^1/_3$ and off-road driving with approx. $^2/_3$ (urban and extra-urban consumption). Cold starts and acceleration phases are also taken into consideration.

The specification of CO_2 emission is also a constituent of the directive.

The figures given must not be taken as a guarantee for the actual fuel consumption of a particular vehicle.

All values are based on the EU base model with standard equipment.

The calculation of fuel consumption as specified by directive 2004/3/EC takes account of the vehicle's kerb weight, ascertained in accordance with the said regulation. Optional extras may result in slightly higher fuel consumption and CO_2 emission levels than those quoted.

Fuel economy, Protecting the environment ⇨ 137.

Fuel consumption, CO_2 emissions

	Z 14 XEP	Z 16 XEP	Z 18 XE	Z 16 LET
5-speed / sport / 6-gear / manual transmission automated				
fuel consumption				
urban [l/100 km]	8.1/–/–/–	8.9/–/–/ 8.9	10.3/–/–/10.1	–/–/ 10.4/–
extra-urban [l/100 km]	5.1/–/–/–	5.4/–/–/ 5.4	5.6/–/–/ 5.7	–/–/ 6.3/–
combined [l/100 km]	6.2/–/–/–	6.7/–/–/ 6.7	7.3/–/–/ 7.3	–/–/ 7.8/–
CO_2 [g/km]	148/–/–/–	159/–/–/159	174/–/–/ 174	–/–/ 187/–

	Z 13 DTJ	Z 17 DT	Z 17 DTH	Z 17 DTR
5-speed / 6-speed / sport / manual transmission automated				
fuel consumption				
urban [l/100 km]	6.2/–/–/–	–/ 6.8/–/–	6.6/–/–/–	–/ 6.8/–/–
extra-urban [l/100 km]	4.3/–/–/–	–/ 4.6/–/–	4.4/–/–/–	–/ 4.6/–/–
combined [l/100 km]	5.0/–/–/–	–/ 5.4/–/–	5.2/–/–/–	–/ 5.4/–/–
CO_2 [g/km]	135/–/–/–	–/ 146/–/–	139/–/–/–	–/ 146/–/–

Weights, payload and roof load

The payload is the difference between the permitted gross vehicle weight (see identification plate ⇨ 218) and the EC kerb weight.

To calculate the kerb weight, enter the data for your vehicle below:

- Unladen weight from table 1 ⇨ 227 +..... kg
- Weight of heavy accessories from table 2 ⇨ 227. +..... kg

Total =..... kg

is the EC kerb weight.

Optional equipment and accessories increase the kerb weight, which means that the payload will also change slightly.

Note weight ranges in the vehicle documents and on the rating plate.

The combined total of front and rear axle loads must not exceed the permissible gross vehicle weight. For example, if the front axle is bearing its maximum permissible load, the rear axle can only bear a load that is equal to the gross vehicle weight minus the front axle load.

When the trailer is coupled and the towing vehicle fully loaded (including all occupants), the permissible rear axle load (see identification plate or vehicle documents) may be exceeded by 25 kg and the permissible gross vehicle weight by 25 kg. If the permissible rear axle load is exceeded, a maximum speed of 100 km/h applies. If national regulations specify a lower maximum speed for vehicles towing a trailer, this must be observed.

See the identification plate or vehicle documents for permissible axle loads.

Roof load

The permissible roof load is 100 kg. The roof load consists of the weight of the roof rack plus the load carried.

Driving hints ⇨ 135. Roof rack ⇨ 158.

Table 1, kerb weight[1)]

Meriva	Engine	Manual transmission	Manual transmission automated
without/with air conditioning [kg]	Z 14 XEP	1330/1355	–/–
	Z 16 XEP	1375/1400	1375/1400
	Z 18 XE	1380/1405	1380/1405
	Z 16 LET	1450/1475	–/–
	Z 13 DTJ	1415/1440	–/–
	Z 17 DT, Z 17 DTR	1460/1485	–/–
	Z 17 DTH	1455/1480	–/–

Table 2, weight of heavy accessories

Accessories	Towing equipment
Weight [kg]	25

[1)] According to EC Directive 70/156/EC, including assumed weights for driver (68 kg), luggage (7 kg) and all fluids (tank 90 % full).

Tyres

Restrictions

Not all tyres available on the market currently meet the structural requirements. We recommend that you consult an Opel Partner concerning suitable tyre makes.

These tyres have undergone special tests to establish their reliability, safety and specific suitability for Opel vehicles. Despite continuous market monitoring, we are unable to assess these attributes for other tyres, even if they have been granted approval by the relevant authorities or in some other form.

Further information ➪ 153.

Winter tyres ✻

Tyres of size 205/50 R 16 are not suitable for use as winter tyres except on vehicles with the Z 16 LET engine.

Tyres of size 205/45 R 17 are not suitable for use as winter tyres.

If winter tyres are in use, the spare wheel may still be fitted with a summer tyre. Use of the spare wheel may alter vehicle handling. Obtain a replacement for the faulty tyre as soon as possible, and have the wheel balanced and fitted to the vehicle.

Further information ➪ 157.

Tyre chains ✻

Tyre chains may be used on the front wheels only.

We recommend the use of tyre chains with a fine mesh that add no more than 10 mm to the running surface and the insides of the tyres (including chain lock).

Tyre chains are not permitted on tyre sizes 205/50 R 16 and 205/45 R 17.

Further information ➪ 157.

Wheels

Wheel bolt tightening torque: 110 Nm.

Spare wheel ✻

Depending on model, the spare wheel is designed as a temporary spare wheel ✻. When using the spare wheel, the driving behaviour may be modified. Replace the faulty tyre as soon as possible, balance the wheel and refit to vehicle. Follow the notes on this page and ➪ 157, ➪ 173.

On vehicles with alloy wheels ✻ the spare wheel may have a steel rim.

The spare wheel can be fitted with a smaller tyre[1)] and a smaller rim than the wheels fitted on the vehicle.

Tyre pressure (overpressure)

The specified tyre pressures are valid for cold tyres. The increased tyre pressure resulting from extensive driving must not be reduced. The tyre pressures specified on the following pages apply to both summer and winter tyres.

The spare wheel must always be inflated to the tyre pressure for a full load – see table on following pages.

Further information ➪ 153 to ➪ 157.

[1)] Country-specific version: The spare wheel is only to be used as a temporary spare wheel.

Tyre pressure (overpressure)

		Suspension behavior when loaded with up to 3 people		With full load	
	Tyres –	front [kPa/bar]	rear [kPa/bar]	front [kPa/bar]	rear [kPa/bar]
Z 14 XEP	175/70 R 14, 185/60 R 15, 205/50 R 16, 205/45 R 17	240/2.4	220/2.2	260/2.6	300/3.0
Z 16 XEP, Z 18 XE	185/60 R 15, 205/50 R 16, 205/45 R 17	240/2.4	220/2.2	260/2.6	300/3.0
Z 16 LET	185/55 R 16[1], 195/50 R 16[1], 205/50 R 16, 205/45 R 17	280/2.8	260/2.6	300/3.0	340/3.4
Z 13 DTJ	185/60 R 15, 205/50 R 16, 205/45 R 17	240/2.4	220/2.2	260/2.6	300/3.0
Z 17 DT, Z 17 DTR	185/60 R 15, 205/50 R 16, 205/45 R 17	280/2.8	260/2.6	300/3.0	340/3.4
Z 17 DTH	185/60 R 15, 205/50 R 16, 205/45 R 17	260/2.6	240/2.4	280/2.8	320/3.2

[1] Only permitted as winter tyres.

Capacities

Engine oil

Engine	Z 14 XEP	Z 16 XEP, Z 16 LET	Z 18 XE	Z 13 DTJ	Z 17 DT, Z 17 DTR	Z 17 DTH
Including filter [l]	3.5	4.5	4.25	3.2	5.4	5.0
Between MIN and MAX [l]	1.0	1.0	1.0	1.0	1.0	1.0

Fuel tank

Petrol/diesel, nominal capacity [l]	53	53	53	53	53	53

Dimensions

	Meriva	Meriva OPC
Length [mm]	4052	4068
Width without exterior mirrors [mm]	1694	1694
Width with two exterior mirrors [mm]	1948	1948
Height [mm]	1624	1624
Length of luggage compartment floor [mm]	861	861
Luggage compartment width [mm]	1034	1034
Height of luggage compartment opening [mm]	832	832
Wheelbase [mm]	2630	2630
Turning circle diameter [m]	10.42	10.42

Mounting dimensions of towing equipment ✻

All measurements refer to Opel-approved towing equipment.

⚠Warning

Only use towing equipment approved for your vehicle. We recommend entrusting retrofitting of towing equipment to your workshop.

Dimensions [mm]	
A	468
B	727
C	508.1
D	471.5
E	441.4
F	497.6
G	496.6
H	35.1
I	50.1
J	36.4
K	90
L	142.6
M	585
N	568

Dimensions [mm]	
O	425
P	378
Q	14
R	16
S	69
T	76
U	430

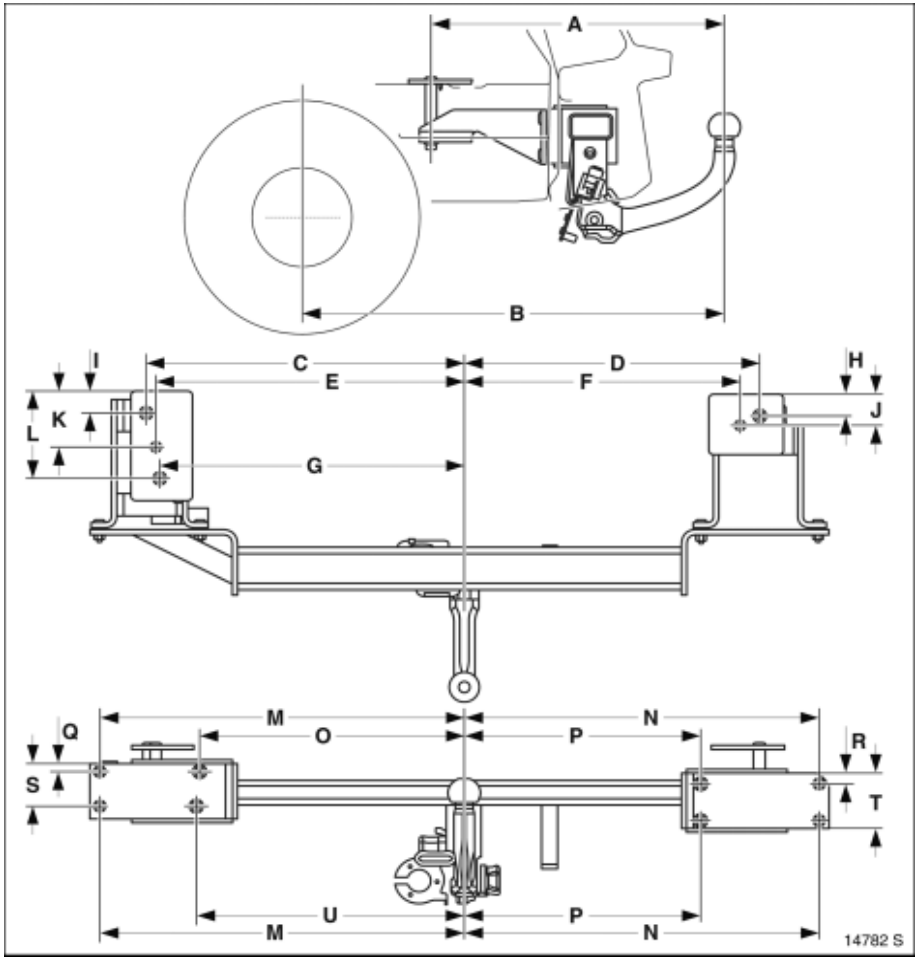
A
B
C
D
E
F
G
H
I
J
K
L
M
N
O
P
Q
R
S
T
U
14782 S

Index

A

ABS (Anti-lock Brake System) 152
Accessories 171
Accessory socket 78
Adaptive brake lamp 152
Adaptive Forward Lighting 106
  Bulb replacement 188
  Driving abroad 110
Adaptive Forward Lighting (AFL) 106
  Bulb replacement 188
  Driving abroad 110
Air conditioning system 114
Air intake 127
Air recirculation system 119, 126
Air vents 115
Airbags 67
Alarm 36
Alarm system 34
Alternator 85
Antenna 111, 196
Anti-corrosion service 208
Antifreeze 208, 212
Antifreeze protection 212, 216
Anti-knock quality of fuel
  Octane number 220
Anti-theft alarm system 34
Anti-theft lock
  Alloy wheels 175
Anti-theft locking system 31
  Towing equipment 160
Aquaplaning 156
Armrest 48
Ashtray 79
Automatic anti-dazzle interior mirror 39
AUX input 112
Auxiliary heater 127

B

Battery 136, 216
  Interruption of power supply 41, 134
Battery discharge protection 110
Before starting off 15
Belt tensioners 60
Bleeding, diesel fuel system 165
Bonnet 165
Boot, see Luggage compartment 32, 53
Brake assist 153
Brake fluid 208
Brake lamp 152
Brake system 151
Brakes
  ABS 152
  Brake assist 153
  Brake fluid 214
  Brake lamps 191
  Brake servo unit 135
  Hand brake 153
Bulb replacement 185
Bulbs 184

C

Capacities 230
Car Pass 26
Caravan/trailer towing 135
Care 196
Catalytic converter 145, 166
Central locking system 28, 30

Centre console lighting 108, 109
Changing the remote control battery 29
Changing wheels 174
Chassis number, see Vehicle identification number 219
Child restraint system 65
Child safety locks 36, 40
Cigarette lighter 78
Climate control system 122
Clutch operation 134, 136
CO2 emissions 224
Coin holder 81
Cold start 136
Colour information display 92
Contrast 96
Control indicator
ABS (Anti-lock Brake System) 152
Airbag 72
Engine electronics 143
Exhaust 143
Immobiliser 27
Control indicators 10, 82
Adaptive Forward Lighting (AFL) 82, 106
Belt tensioners 61
Cruise control 148
EPS (Electric Power Steering) 86
ESP (Electronic Stability Program) 146
Coolant 208, 212
Coolant level 213
Coolant temperature display 88
Coolant thermometer 88
Cornering light 106
Correcting time 95
Coupling socket load 163
Courtesy lamp 108
Bulb replacement 194
Cruise control 148
Curtain airbags 71
Curve lighting 106

D

Dashboard, see Instrument panel 15
Data 26, 218
Date 92
Daytime running lights 102
Decommissioning 217
Demisting and defrosting
Windows 118
with climate control system 124
With the air conditioning system 121
Diesel fuel filter 212
Diesel fuel system 165, 212
Diesel particle filter 41, 86, 136, 144
Dimensions 231
Dipped beam 11
Bulb replacement 186, 188
Display 90
Display mode 96
Door locks 26, 198
Driving abroad 199
Headlamps 110
Toll systems 112
Driving hints 135

E

Easytronic 15, 129
Driving programmes 131
Fault 133
Interruption of power supply 134
Kickdown 132
Selector lever 15, 130
Winter programme 132
Economical driving 137
Electric power steering 86
Electric windows 40
Electrical system 181, 216
Electronic components 216
Electronic immobiliser 27
Electronic Stability Program 146
Engine code 220, 221
Engine control indicator 143
Engine oil 207, 210
Additives 207
Top up 207
Viscosity 207
Engine oil consumption ... 135, 210, 220, 221
Engine oil level 210
Engine oil pressure 84
Engine speed 136
Engine wash 198
Environmental protection 196
EPS 86
ESP (Electronic Stability Program) 146
Exhaust control indicator 143
Exhaust gases 144
Exhaust system 135

Exterior lighting switch-off delay..... 107
Exterior mirrors.....4, 36, 38, 41

F

Fan..... 114
Fault..... 41
Filling station
  Engine oil level 210
  Fuel 220, 221
  Opening the bonnet 165
  Tyre pressure.....138, 228
  Vehicle data 218, 219
  Windscreen washer system..... 215
First-aid kit 171
Flat tyre 178
FlexSpace 52
Fog lamps 103
  Bulb replacement..... 191
Fog tail lamp..... 104
  Bulb replacement..... 191
Foot brake.....151, 153
Front passenger airbag 67
Fuel 139, 220, 221
Fuel consumption 137, 224
Fuel filter..... 212
Fuel gauge 88
Fuel system, diesel..... 165
Fuses..... 181

G

Gears 14, 134
Generator, see Alternator..... 85
Glasses compartment 81
Glove compartment 80
Glove compartment lighting 109
  Bulb replacement 195
Graphical information display 90
Gross vehicle weight..... 226
Gross vehicle weight rating 226

H

Halogen headlamp system 185
  Bulb replacement 185
  Driving abroad..... 110
Hand brake.....16, 153
Hazard warning lamps 12, 104
Head restraints 21, 46, 47
Headlamp flash..... 11
Headlamp range adjustment..... 104
Headlamp switch 11, 102
Headlamp washer system13, 100, 101, 215
Headlamps 11
  Daytime running lights..... 102
  Driving abroad..... 110
  Fog lamps 103
  Reversing lamps..... 104
  Warning device..... 100
Headlights
  Changing bulbs 185
Heated exterior mirrors..... 13, 38, 41
Heated rear window 13, 38, 41
Heated seats..... 46
Heating 114, 117
  Seats 46
  With climate control system 123
  With the air conditioning system..... 114
Height adjustment
  Seat belts 63
  Steering wheel 5
High-pressure cleaners 198
Hill Start Assist..... 153
Horn..... 12

I

Identification plate..... 218, 219
Idling 134
Ignition switch..... 16, 27
Ignition system 209, 216
Immobiliser 27
Information display..... 90
Infotainment system 111
Instrument display 87
Instrument illumination..... 108
  Bulb replacement 196
Instrument panel 15
Instruments 15, 82, 87
Interior mirror..... 4, 38, 39
Interruption of power supply..... 99
  Easytronic..... 134
  Electric sun roof 43
  Electric windows 41
  Electronic Stability Program 147
ISOFIX 79

J

Jack 171, 176
Jump leads..... 166

K

Key
extending ... 26
ignition lock ... 16, 27
Locking doors ... 28, 30, 36
Starting ... 27
Starting the engine ... 16
Keys ... 26

L

Language selection ... 95
Lashing eyes ... 57
Leather trim ... 197
Light switch ... 11
Lighting ... 11, 102
Driving abroad ... 110
Loading ... 58, 162, 226
Loading the vehicle ... 58
Locking doors ... 2, 28, 30, 36
Locking from the inside ... 30
Lubricants ... 210
Luggage compartment
Bulb replacement ... 195
Cover ... 55
Extension ... 32, 53
Lighting ... 109
Loading ... 58, 162, 226
Luggage compartment cover ... 55
Lumbar support ... 45

M

Main beam ... 11
Bulb replacement ... 187, 188
Control indicator ... 84
Maintenance
Air conditioning system ... 128
Antifreeze protection ... 212
Brake fluid ... 214
Brakes ... 213
Catalytic converter ... 145
Engine oil ... 210
Fuel consumption ... 138
Tyre pressure ... 154, 228
Tyres ... 155
Manual transmission ... 14, 134
Mirrors ... 4, 38
Misted windows ... 118, 121, 124
Mobile telephone ... 113
Muffler, see Exhaust system ... 144

N

Number plate lamps
Bulb replacement ... 193
Number plate lighting ... 193
Number plates ... 217

O

Octane numbers ... 220, 221
Odometer ... 87
Oil ... 207
Additives ... 207
Top up ... 207
Viscosity ... 207
Oil consumption ... 210, 220, 221
Oil level ... 210
Oil pressure ... 84
Opel Service ... 199
Operating temperature ... 136
Outside temperature gauge ... 91
Overrun ... 136, 138

P

Paintwork damage ... 197
Park pilot ... 150
Parking lamps ... 11
Bulb replacement ... 189
Pedals ... 136
Performance ... 222
Pollen filter ... 127
Power assisted steering,
see electronic power steering ... 86
Power steering, see electronic
power steering ... 86
Preheating ... 86
Pushing, towing ... 142, 166

Q

Quickheat ... 127

R

Radio ... 24, 111
Radio equipment (CB) ... 113
Radio reception ... 111
Radio remote control ... 28
Reading lamps ... 109
Rear lamp cluster ... 102
Bulb replacement ... 191

Rear seats ... 51
Rear window washer system ... 13, 101, 215
Refuelling ... 140
  Fuel filler cap ... 141
Remote control
  Central locking system ... 28
  Steering wheel ... 24, 111
Replacement keys ... 26
Reversing lamps ... 107
  Bulb replacement ... 191
Roof load ... 58, 135, 138, 226
Roof rack ... 58, 138, 158
Roof racks ... 58, 138
Running-in ... 135
  Brakes ... 213

S

Safeguard against
  unauthorised use ... 15, 17, 27, 36
Safety accessories ... 171
Safety net ... 56
Safety systems ... 111
Saving energy ... 136
Seat adjustment ... 2, 44, 51
Seat belts ... 62, 198
Seat height adjustment ... 3, 45
Seat occupancy recognition ... 72
Seat position ... 2, 44, 45
Seats ... 2, 44
  Extending the luggage
  compartment ... 32, 53
  heated ... 46
Selector lever ... 130
Self-diagnosis ... 61, 72, 153
Self-help
  Central locking ... 31
  Electric windows ... 40
  Information display ... 92
  Radio remote control ... 29
Self-help, care for your car ... 165
Service interval display ... 208
Service intervals ... 199
  additional work ... 206
  hard driving conditions ... 206
  main inspection ... 199
Service work ... 208
Side airbags ... 69
Signal system ... 11, 12
Spare wheel ... 172, 174
Speed ... 137, 138
  Fuel consumption ... 137, 138
Speedometer ... 87
Starting the engine ... 15, 27, 130, 166
  Self-help ... 166
Steam-jet cleaners ... 198
Steering column lock ... 15
Steering wheel adjustment ... 5
Steering wheel remote control ... 24, 111
Stowage compartments ... 80
Sun roof ... 42
  Fault ... 43
Sun shade ... 43
Sun visors ... 81
System settings ... 94

T

Tables ... 81
Tachometer ... 87
Tail lamps ... 102
  Bulb replacement ... 191
Tank
  Fuel gauge ... 88
Technical data ... 218
Telephone, see Mobile telephone ... 113
Temperature regulation ... 123
Tempomat, see cruise control ... 148
Temporary spare wheel ... 158, 173
The first 1000 km ... 135
Tightening torque ... 177, 228
Time ... 92
Toll systems ... 112
Tools ... 171
Towing equipment ... 158
Towing eye ... 168, 170
Transmission ... 14
  Manual transmission ... 134
Transmission, Easytronic ... 129
  Driving programmes ... 131
  fault ... 133
  Interruption of power supply ... 134
  Kickdown ... 132
  Selector lever ... 15, 130
  Winter programme ... 132
Travel Assistant ... 22, 48, 49
Tread depth ... 155
Trip computer ... 23, 97
Trip odometer ... 87
Triple information display ... 90
Turn signal lamps ... 11, 103
Turn signals
  Bulb replacement ... 190, 191
Twin Audio ... 24, 112

Tyre chains 157, 228
Tyre condition 155
Tyre pressure 154, 228
Tyre repair kit 178

U

Units of measure 96
Unleaded fuel 142, 220, 221

V

Valve cap key 154
Vehicle care 196
Vehicle decommissioning 217
Vehicle identification number 219
Vehicle keys, see Keys 26
Vehicle recommissioning 217
Ventilation 114, 117, 125

W

Warning buzzers 100
Warning triangle 171
Washer fluid reservoir,
windscreen washer system 215
Weights 226
Wheels 153
Wheels, tyres 153
Windows 39
Demisting and defrosting . 118, 121, 124
Windscreen washer
system 13, 100, 101, 215
Antifreeze protection 216
Washer fluid reservoir 215
Windscreen wipers 12, 100, 215
Winter mode
Starting-off aid 132
Winter operation
Battery 136
Coolant, antifreeze 212
Fuel consumption 138
Fuel for diesel engines 139
Heating 114
Locks 198
Tyre chains 157, 228
Window demisting and
defrosting 118, 121, 124
Windscreen washer system,
antifreeze protection 216
Winter programme 132
Winter tyres 228

X

Xenon headlamp system
Bulb replacement 188
Driving abroad 110

Back to overview

Opel. Fresh thinking - better cars.

Copyright by ADAM OPEL GmbH, Rüsselsheim, Germany.

The information contained in this document is effective from the date indicated below. Adam Opel GmbH reserves the right to make changes to the technical specifications, features and design of the vehicles in relation to the information contained in this document, as well as changes to the document itself.

Edition: August 2008, ADAM OPEL GmbH, Rüsselsheim.

Printed on chlorine-free bleached paper.

KTA-2540/9-GB 13 127 076 Art.-Nr. 09 927 429 08/2008

Back to overview