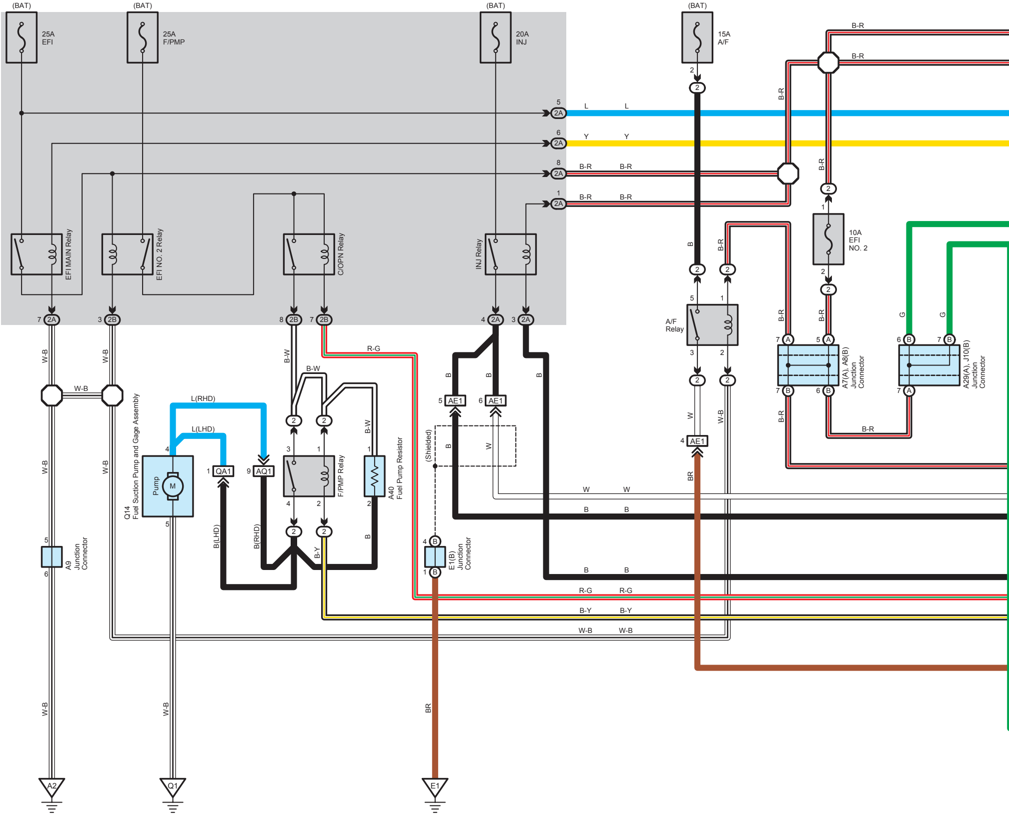
(BAT)
25A
EFI
(BAT)
25A
F/PMP
(BAT)
20A
INJ
(BAT)
15A
A/F
EFI MAIN Relay
EFI NO. 2 Relay
C/OPN Relay
INJ Relay
10A
EFI
NO. 2
A/F
Relay
F/PMP Relay
A40
Fuel Pump Resistor
Q14
Fuel Suction Pump and Gage Assembly
Pump
M
A9
Junction
Connector
E1(B)
Junction
Connector
A7(A), A8(B)
Junction
Connector
A29(A), J10(B)
Junction
Connector
(Shielded)
2A
2B
AE1
QA1
AQ1
L
Y
B-R
G
W
B
R-G
B-Y
W-B
B-W
BR
L(RHD)
L(LHD)
B(LHD)
B(RHD)
A2
Q1
E1

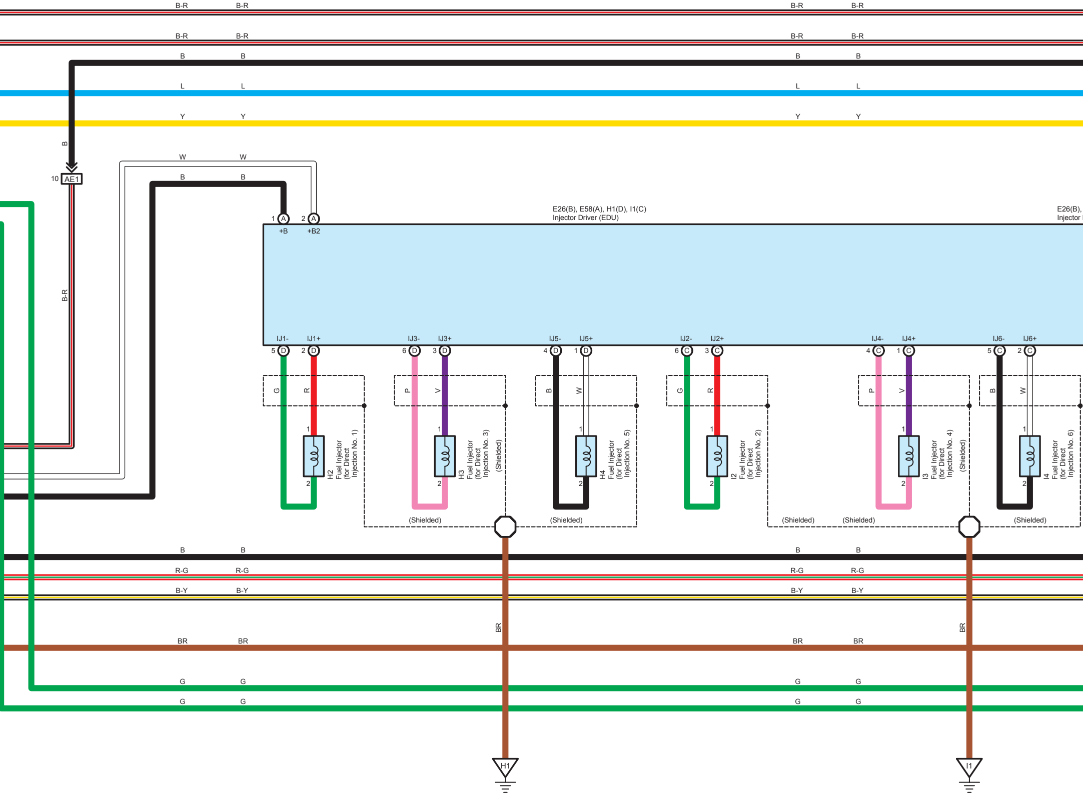
B-R
B-R
B
L
Y
B
W
B
10
AE1
B-R
E26(B), E58(A), H1(D), I1(C)
Injector Driver (EDU)
E26(B),
Injector
1 A +B
2 A +B2
IJ1-
IJ1+
IJ3-
IJ3+
IJ5-
IJ5+
IJ2-
IJ2+
IJ4-
IJ4+
IJ6-
IJ6+
5 D
2 D
6 D
3 D
4 D
1 D
6 C
3 C
4 C
1 C
5 C
2 C
G
R
P
V
B
W
H2
Fuel Injector
(for Direct
Injection No. 1)
H3
Fuel Injector
(for Direct
Injection No. 3)
H4
Fuel Injector
(for Direct
Injection No. 5)
I2
Fuel Injector
(for Direct
Injection No. 2)
I3
Fuel Injector
(for Direct
Injection No. 4)
I4
Fuel Injector
(for Direct
Injection No. 6)
1
2
(Shielded)
R-G
B-Y
BR
G
H1
I1

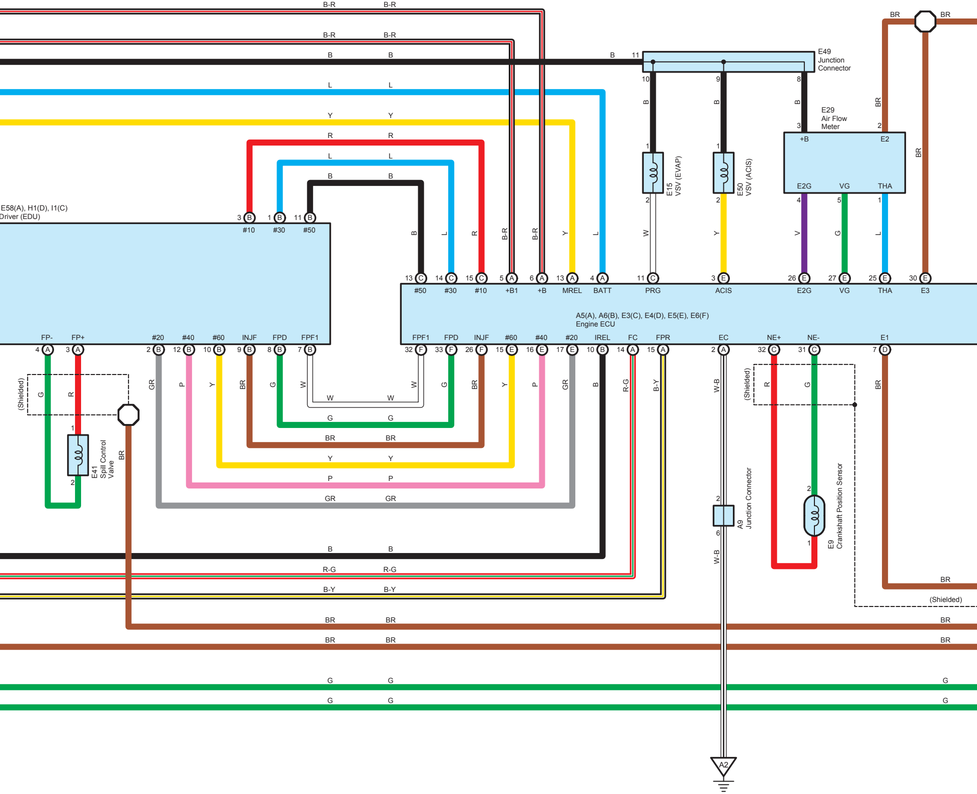
B-R
B-R
B-R
B-R
B
B
B
11
L
L
Y
Y
R
R
L
L
B
B
E49
Junction
Connector
10
9
8
B
B
B
E29
Air Flow
Meter
BR
BR
BR
BR
3
2
+B
E2
1
1
E15
VSV (EVAP)
E50
VSV (ACIS)
E2G
VG
THA
2
2
4
5
1
E58(A), H1(D), I1(C)
Driver (EDU)
3 B
1 B
11 B
#10
#30
#50
B
L
R
B-R
B-R
Y
L
W
Y
V
G
L
13 C
14 C
15 C
5 A
6 A
13 A
4 A
11 C
3 E
26 E
27 E
25 E
30 E
#50
#30
#10
+B1
+B
MREL
BATT
PRG
ACIS
E2G
VG
THA
E3
A5(A), A6(B), E3(C), E4(D), E5(E), E6(F)
Engine ECU
FP-
FP+
#20
#40
#60
INJF
FPD
FPF1
4 A
3 A
2 B
12 B
10 B
9 B
8 B
7 B
FPF1
FPD
INJF
#60
#40
#20
IREL
FC
FPR
EC
NE+
NE-
E1
32 F
33 F
26 F
15 E
16 E
17 E
10 B
14 A
15 A
2 A
32 C
31 C
7 D
(Shielded)
G
R
GR
P
Y
BR
G
W
W
G
BR
Y
P
GR
B
R-G
B-Y
W-B
(Shielded)
R
G
BR
W
W
G
G
BR
BR
Y
Y
P
P
GR
GR
1
2
E41
Spill Control
Valve
BR
2
6
A9
Junction Connector
W-B
2
1
E9
Crankshaft Position Sensor
B
B
R-G
R-G
B-Y
B-Y
BR
(Shielded)
BR
BR
BR
BR
BR
BR
BR
G
G
G
G
G
G
A2

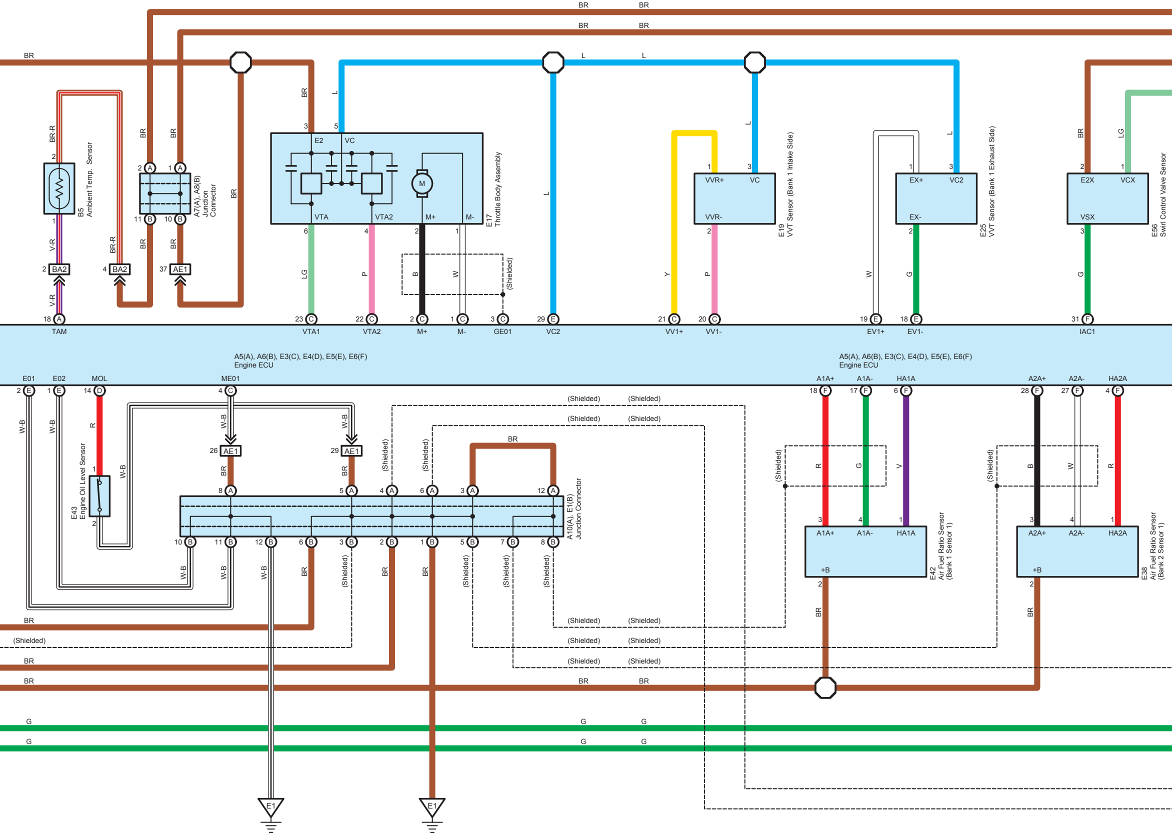
B5 Ambient Temp. Sensor
A7(A), A8(B) Junction Connector
E17 Throttle Body Assembly
E2
VC
VTA
VTA2
M+
M-
M
(Shielded)
E19 VVT Sensor (Bank 1 Intake Side)
VVR+
VVR-
E25 VVT Sensor (Bank 1 Exhaust Side)
EX+
VC2
EX-
E56 Swirl Control Valve Sensor
E2X
VCX
VSX
BA2
AE1
A5(A), A6(B), E3(C), E4(D), E5(E), E6(F) Engine ECU
TAM
VTA1
VTA2
M+
M-
GE01
VC2
VV1+
VV1-
EV1+
EV1-
IAC1
E01
E02
MOL
ME01
A1A+
A1A-
HA1A
A2A+
A2A-
HA2A
E43 Engine Oil Level Sensor
A10(A), E1(B) Junction Connector
E42 Air Fuel Ratio Sensor (Bank 1 Sensor 1)
E38 Air Fuel Ratio Sensor (Bank 2 Sensor 1)
+B
E1
BR
BR-R
V-R
L
LG
P
B
W
Y
G
R
V
W-B

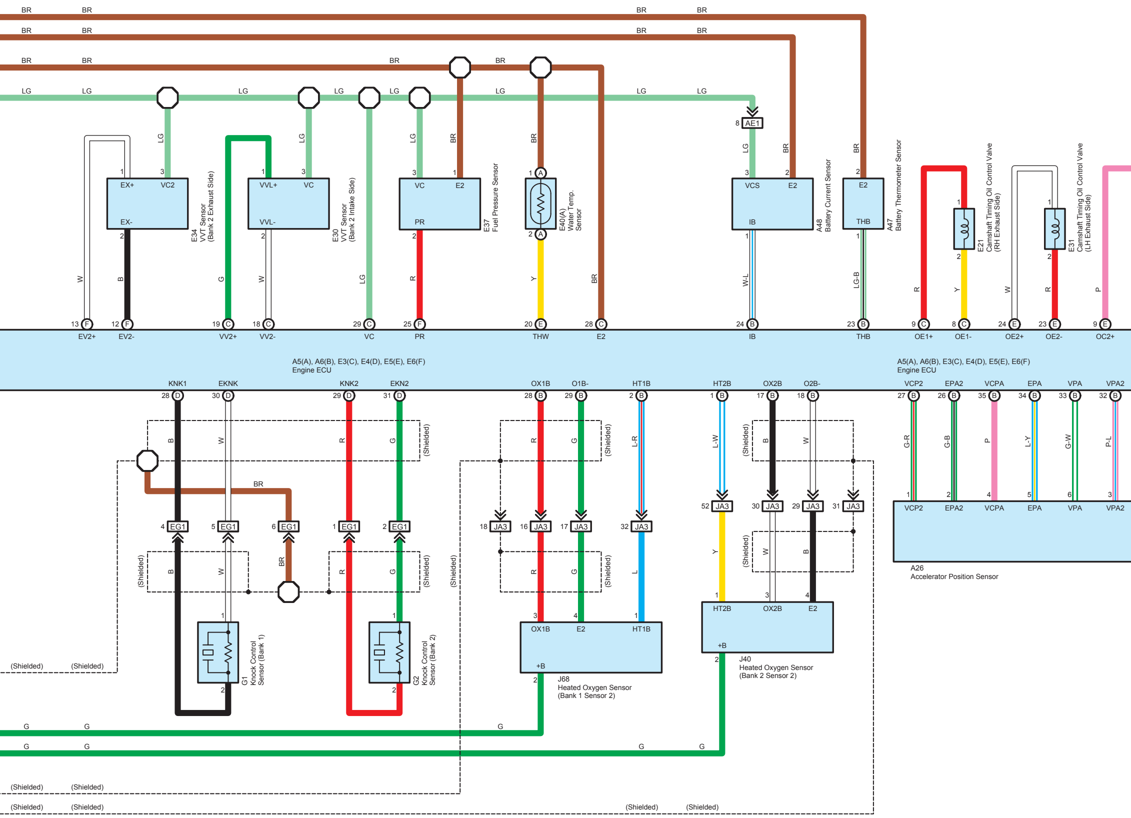
BR
LG
A5(A), A6(B), E3(C), E4(D), E5(E), E6(F)
Engine ECU
E34
VVT Sensor
(Bank 2 Exhaust Side)
EX+
VC2
EX-
E30
VVT Sensor
(Bank 2 Intake Side)
VVL+
VC
VVL-
E37
Fuel Pressure Sensor
VC
E2
PR
E40(A)
Water Temp.
Sensor
A48
Battery Current Sensor
VCS
E2
IB
AE1
A47
Battery Thermometer Sensor
E2
THB
E21
Camshaft Timing Oil Control Valve
(RH Exhaust Side)
E31
Camshaft Timing Oil Control Valve
(LH Exhaust Side)
W
B
G
R
Y
W-L
LG-B
P
EV2+
EV2-
VV2+
VV2-
VC
PR
THW
E2
IB
THB
OE1+
OE1-
OE2+
OE2-
OC2+
KNK1
EKNK
KNK2
EKN2
OX1B
O1B-
HT1B
HT2B
OX2B
O2B-
VCP2
EPA2
VCPA
EPA
VPA
VPA2
L-R
L-W
G-R
G-B
L-Y
G-W
P-L
L
(Shielded)
EG1
JA3
G1
Knock Control
Sensor (Bank 1)
G2
Knock Control
Sensor (Bank 2)
J68
Heated Oxygen Sensor
(Bank 1 Sensor 2)
OX1B
E2
HT1B
+B
J40
Heated Oxygen Sensor
(Bank 2 Sensor 2)
HT2B
OX2B
E2
+B
A26
Accelerator Position Sensor
VCP2
EPA2
VCPA
EPA
VPA
VPA2

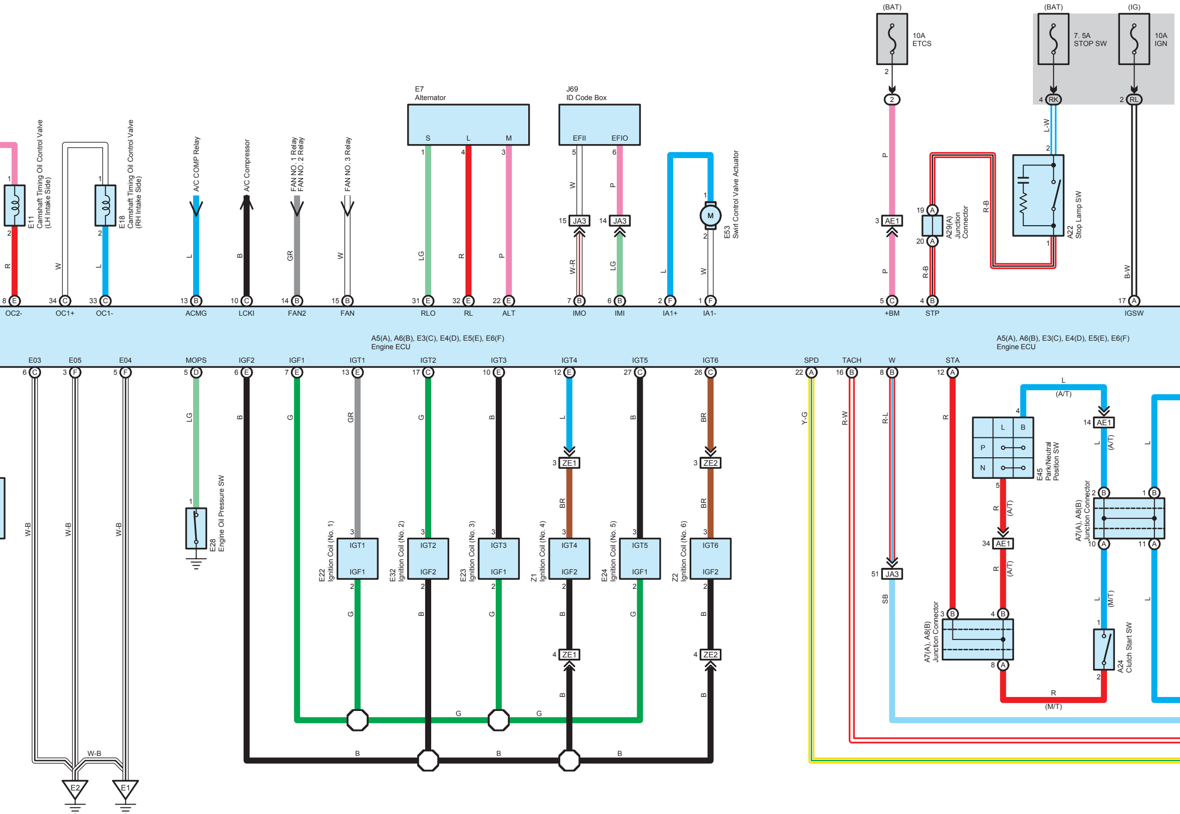
E11
Camshaft Timing Oil Control Valve
(LH Intake Side)
E18
Camshaft Timing Oil Control Valve
(RH Intake Side)
A/C COMP Relay
A/C Compressor
FAN NO. 1 Relay
FAN NO. 2 Relay
FAN NO. 3 Relay
E7
Alternator
S
L
M
J69
ID Code Box
EFII
EFIO
JA3
E53
Swirl Control Valve Actuator
M
(BAT)
10A
ETCS
AE1
(BAT)
7. 5A
STOP SW
(IG)
10A
IGN
RK
RL
A29(A)
Junction
Connector
A22
Stop Lamp SW
R
W
L
B
GR
LG
P
W-R
R-B
L-W
B-W
OC2-
OC1+
OC1-
ACMG
LCKI
FAN2
FAN
RLO
RL
ALT
IMO
IMI
IA1+
IA1-
+BM
STP
IGSW
A5(A), A6(B), E3(C), E4(D), E5(E), E6(F)
Engine ECU
E03
E05
E04
MOPS
IGF2
IGF1
IGT1
IGT2
IGT3
IGT4
IGT5
IGT6
SPD
TACH
W
STA
W-B
E2
E1
E28
Engine Oil Pressure SW
E22
Ignition Coil (No. 1)
E32
Ignition Coil (No. 2)
E23
Ignition Coil (No. 3)
Z1
Ignition Coil (No. 4)
E24
Ignition Coil (No. 5)
Z2
Ignition Coil (No. 6)
ZE1
ZE2
G
BR
Y-G
R-W
R-L
SB
E45
Park/Neutral
Position SW
P
N
(A/T)
(M/T)
A7(A), A8(B)
Junction Connector
A24
Clutch Start SW

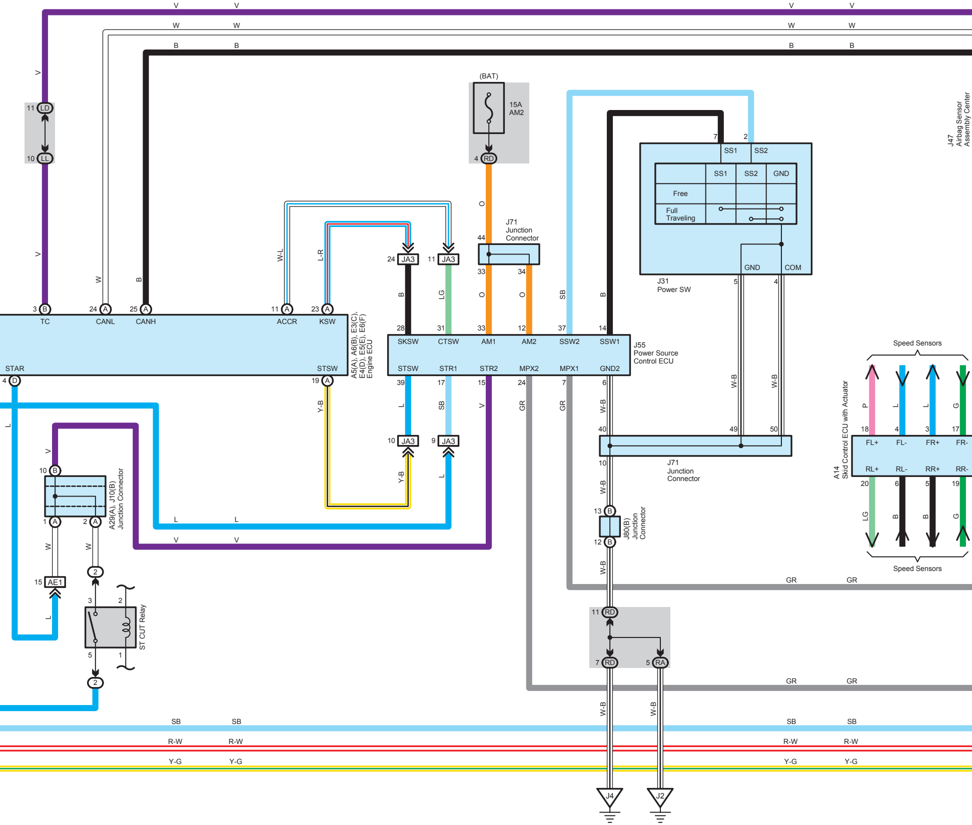
V
W
B
11 LD
10 LL
(BAT)
15A AM2
4 RD
J47 Airbag Sensor Assembly Center
7
2
SS1
SS2
SS1
SS2
GND
Free
Full Traveling
GND
COM
J31 Power SW
5
4
O
J71 Junction Connector
44
33
34
W-L
L-R
24 JA3
11 JA3
B
LG
O
O
SB
B
3 B
24 A
25 A
11 A
23 A
TC
CANL
CANH
ACCR
KSW
STAR
STSW
4 D
19 A
A5(A), A6(B), E3(C), E4(D), E5(E), E6(F) Engine ECU
28
31
33
12
37
14
SKSW
CTSW
AM1
AM2
SSW2
SSW1
STSW
STR1
STR2
MPX2
MPX1
GND2
39
17
15
24
7
6
J55 Power Source Control ECU
Y-B
L
SB
V
GR
GR
W-B
W-B
W-B
40
49
50
10 JA3
9 JA3
J71 Junction Connector
10
Speed Sensors
P
L
L
G
18
4
3
17
FL+
FL-
FR+
FR-
RL+
RL-
RR+
RR-
20
6
5
19
LG
B
B
G
A14 Skid Control ECU with Actuator
Speed Sensors
10 B
1 A
2 A
A29(A), J10(B) Junction Connector
W
W
15 AE1
2
3
2
5
1
2
ST CUT Relay
L
13 B
12 B
J80(B) Junction Connector
GR
11 RD
7 RD
5 RA
SB
R-W
Y-G
J4
J2

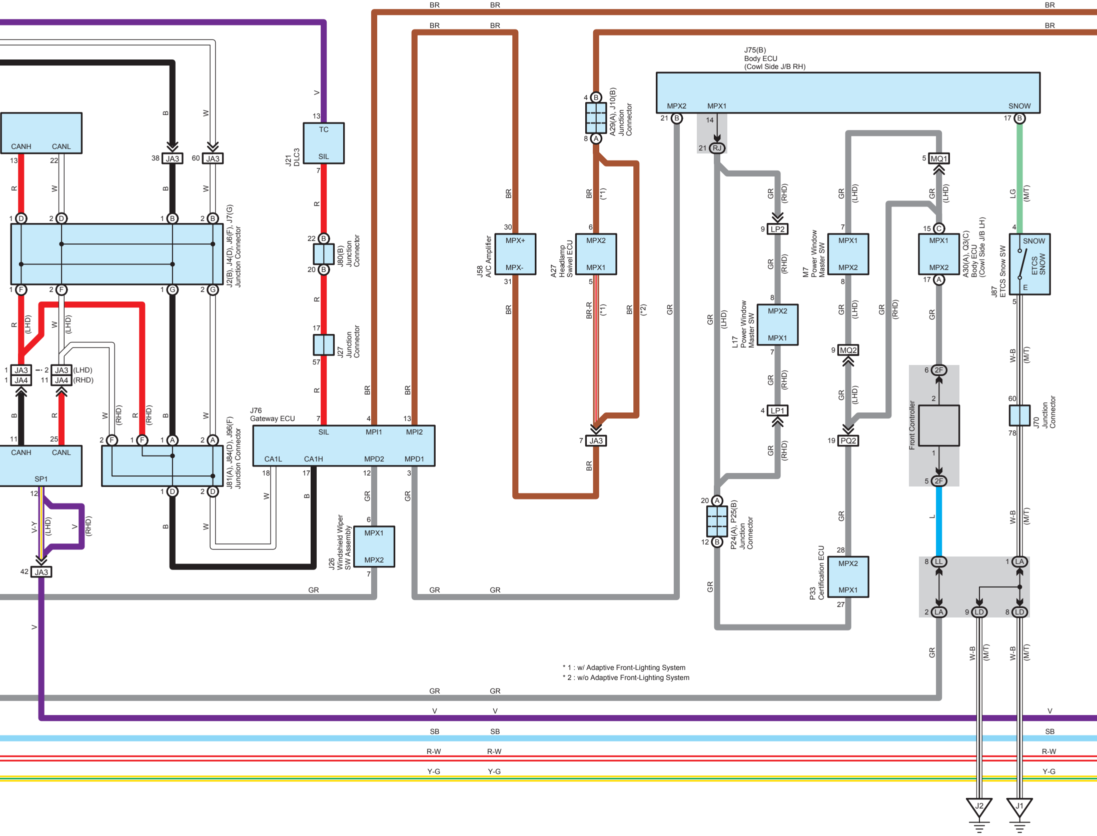

J75(B)
Body ECU
(Cowl Side J/B RH)
MPX2
MPX1
SNOW
J21 DLC3
TC
SIL
J80(B) Junction Connector
J27 Junction Connector
J76 Gateway ECU
SIL
MPI1
MPI2
CA1L
CA1H
MPD2
MPD1
CANH
CANL
SP1
J2(B), J4(D), J6(F), J7(G) Junction Connector
J81(A), J84(D), J96(F) Junction Connector
JA3
JA4
(LHD)
(RHD)
J26 Windshield Wiper SW Assembly
MPX1
MPX2
J58 A/C Amplifier
MPX+
MPX-
A27 Headlamp Swivel ECU
MPX2
MPX1
A29(A), J10(B) Junction Connector
(*1)
(*2)
L17 Power Window Master SW
M7 Power Window Master SW
A30(A), Q3(C) Body ECU (Cowl Side J/B LH)
J87 ETCS Snow SW
ETCS SNOW
E
Front Controller
J70 Junction Connector
P24(A), P25(B) Junction Connector
P33 Certification ECU
RJ
LP1
LP2
MQ1
MQ2
PQ2
2F
LL
LA
LD
J1
J2
BR
BR-R
GR
LG
W-B
(M/T)
L
V
V-Y
R
W
B
SB
R-W
Y-G

* 1 : w/ Adaptive Front-Lighting System
* 2 : w/o Adaptive Front-Lighting System

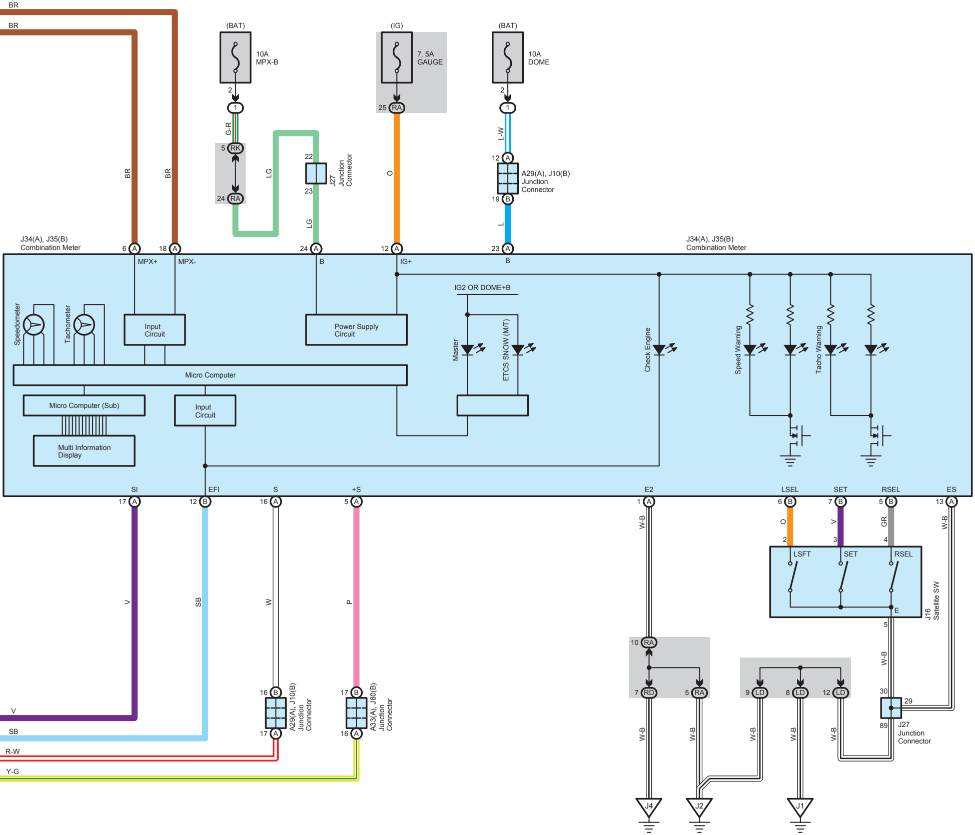
BR
BR
(BAT)
10A
MPX-B
(IG)
7. 5A
GAUGE
(BAT)
10A
DOME
2
1
G-R
5 RK
24 RA
LG
22
23
J27
Junction
Connector
LG
25 RA
O
2
1
L-W
12 A
A29(A), J10(B)
Junction
Connector
19 B
L
BR
BR
J34(A), J35(B)
Combination Meter
6 A
18 A
24 A
12 A
23 A
J34(A), J35(B)
Combination Meter
MPX+
MPX-
B
IG+
B
Speedometer
Tachometer
Input
Circuit
Power Supply
Circuit
IG2 OR DOME+B
Master
ETCS SNOW (M/T)
Check Engine
Speed Warning
Tacho Warning
Micro Computer
Micro Computer (Sub)
Input
Circuit
Multi Information
Display
SI
EFI
S
+S
E2
LSEL
SET
RSEL
ES
17 A
12 B
16 A
5 A
1 A
6 B
7 B
5 B
13 A
V
SB
W
P
W-B
O
V
GR
W-B
2
3
4
LSFT
SET
RSEL
E
5
J16
Satellite SW
16 B
17 A
A29(A), J10(B)
Junction
Connector
17 B
16 A
A33(A), J80(B)
Junction
Connector
10 RA
7 RD
5 RA
9 LD
8 LD
12 LD
W-B
30
29
89
J27
Junction
Connector
W-B
W-B
W-B
W-B
W-B
V
SB
R-W
Y-G
J4
J2
J1