MANUAL TRANSAXLE SYSTEM

PROBLEM SYMPTOMS TABLE

Use the table below to help find the cause of the problem. The numbers indicate the likelihood of the possible causes in descending order. Check each part in order. Replace parts as necessary.

Symptom	Suspected area	See page
Noise	1. Oil (Level low)	MX-2
	2. Oil (Wrong)	MX-2
	3. Gear (Input shaft) (Worn or damaged)	MX-78
	4. Gear (Output shaft) (Worn or damaged)	MX-89
	5. Bearing (Input shaft) (Worn or damaged)	MX-76
	6. Bearing (Output shaft) (Worn or damaged)	MX-86
	7. Bearing (Differential case) (Worn or damaged)	MX-101
Oil leakage	1. Oil (Level too high)	MX-2
	2. Gasket (Damaged)	MX-41
	3. Oil seal (Worn or damaged)	MX-4
Hard or impossible to shift	1. Control cable (Faulty)	MX-16
	2. Shift fork (Worn)	MX-56
	3. Synchronizer ring ((Input shaft) Worn or damaged)	MX-78
	4. Synchronizer ring (Output shaft) (Worn or damaged)	MX-89
	5. Shift key spring (Input shaft) (damaged)	MX-76
	6. Shift key spring (Output shaft) (damaged)	MX-86
	7. Gear (Input shaft) (damaged)	MX-78
	8. Gear (Output shaft) (damaged)	MX-89
	9. Hub sleeve (Input shaft) (damaged)	MX-78
	10. Hub sleeve (Output shaft) (damaged)	MX-89
Jumps out of gear	1. Shift fork (Worn)	MX-56
	2. Gear (Input shaft) (Worn or damaged)	MX-78
	3. Gear (Output shaft) (Worn or damaged)	MX-89
	4. Bearing (Input shaft) (Worn or damaged)	MX-76
	5. Bearing (Output shaft) (Worn or damaged)	MX-86

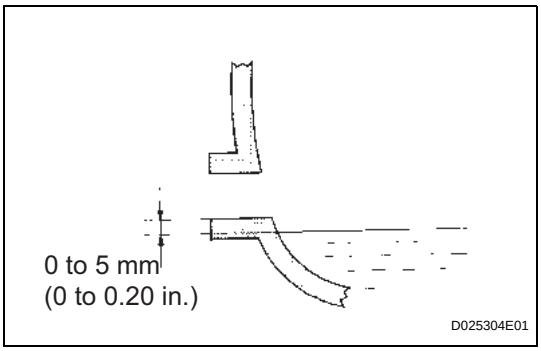

MANUAL TRANSAXLE OIL

ON-VEHICLE INSPECTION

1. INSPECT TRANSAXLE OIL

(a) Stop the vehicle in a level place.

(b) Remove the transmission filler plug and the gasket.

(c) Check that the oil surface is within 5 mm (0.20 in.) of the bottom of the transmission filler plug opening.

NOTICE:

- **Excessively large or small amounts of oil may cause problems.**
- **After replacing the oil, drive the vehicle and check the oil level again.**

(d) Check for oil leakage when the oil level is low.

(e) Install the transmission filler plug and a new gasket.

Torque: 39 N*m (400 kgf*cm, 29 ft.*lbf)

DIFFERENTIAL OIL SEAL

COMPONENTS

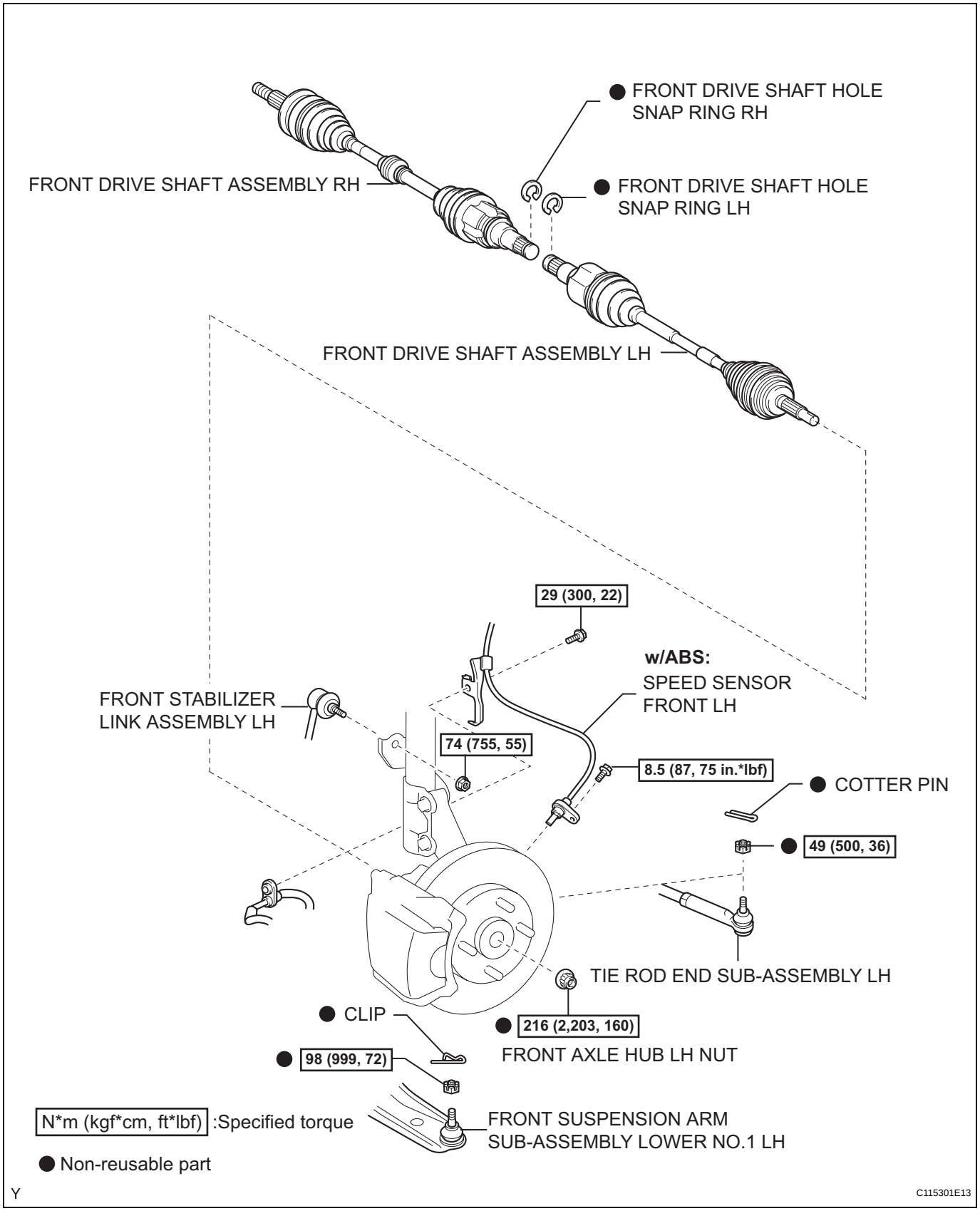

MX

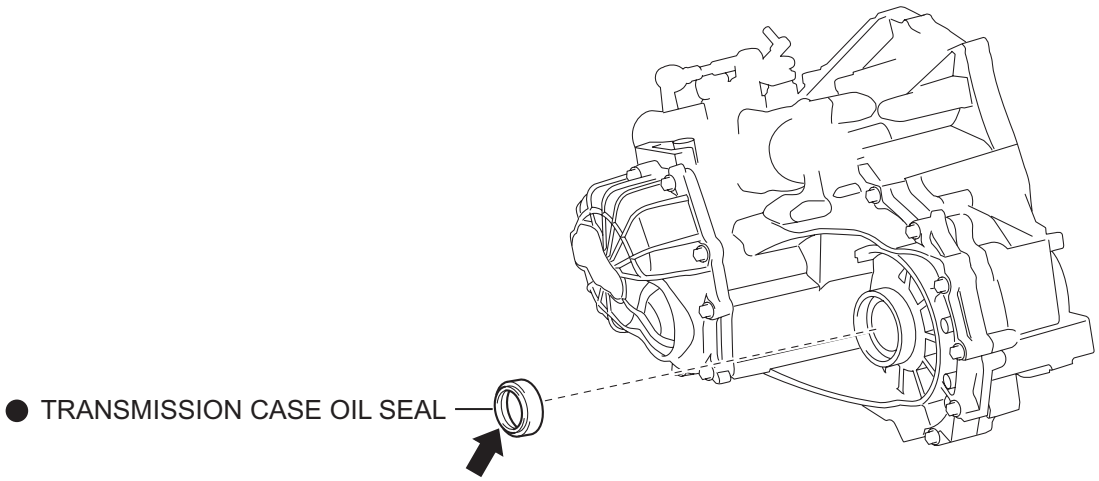

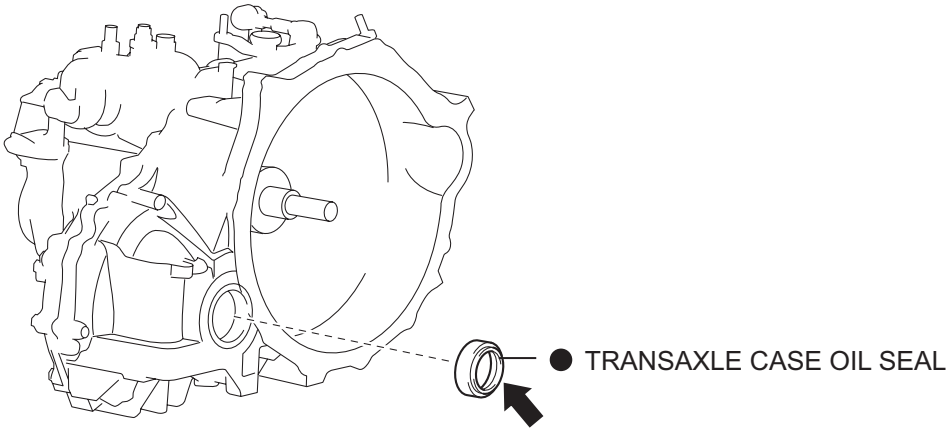

● Non-reusable part

Apply MP grease

Y

C108463E01

REMOVAL

1. **DISCONNECT CABLE FROM NEGATIVE BATTERY TERMINAL**

2. **DRAIN TRANSAXLE OIL**
   (a) Remove the filler plug and the gasket.
   (b) Remove the drain plug and gasket, and then drain the manual transaxle oil.
   (c) Install a new gasket and the drain plug.
   Torque: 39 N*m (400 kgf*cm, 29 ft.*lbf)

3. **REMOVE FRONT WHEELS**

4. **REMOVE FRONT AXLE HUB LH NUT (See page DS-3)**

5. **REMOVE FRONT AXLE HUB RH NUT**
   HINT:
   The removal procedure for the RH side is the same as that for the LH side.

6. **SEPARATE SPEED SENSOR FRONT LH (w/ ABS) (See page DS-3)**

7. **SEPARATE SPEED SENSOR FRONT RH (w/ ABS)**
   HINT:
   The separation procedure for the RH side is the same as that for the LH side.

8. **SEPARATE FRONT SUSPENSION ARM SUB-ASSEMBLY LOWER NO.1 LH (See page DS-4)**

9. **SEPARATE FRONT SUSPENSION ARM SUB-ASSEMBLY LOWER NO.1 RH**
   HINT:
   The separation procedure for the RH side is the same as that for the LH side.

10. **SEPARATE TIE ROD END SUB-ASSEMBLY LH (See page DS-3)**

11. **SEPARATE TIE ROD END SUB-ASSEMBLY RH**
    HINT:
    The separation procedure for the RH side is the same as that for the LH side.

12. **SEPARATE FRONT STABILIZER LINK ASSEMBLY LH (See page DS-4)**

13. **SEPARATE FRONT STABILIZER LINK ASSEMBLY RH**
    HINT:
    The separation procedure for the RH side is the same as that for the LH side.

14. **SEPARATE FRONT AXLE ASSEMBLY LH (See page DS-4)**

15. SEPARATE FRONT AXLE ASSEMBLY RH

HINT:
The separation procedure for the RH side is the same as that for the LH side.

16. REMOVE FRONT DRIVE SHAFT ASSEMBLY LH (See page DS-5)

17. REMOVE FRONT DRIVE SHAFT ASSEMBLY RH (See page DS-5)

18. REMOVE TRANSAXLE CASE OIL SEAL

(a) Using SST, remove the oil seal.
SST 09308-00010

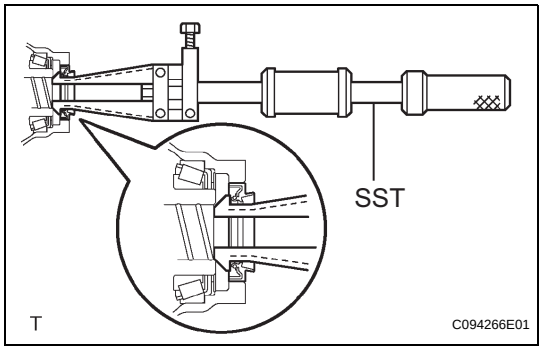

19. REMOVE TRANSMISSION CASE OIL SEAL

(a) Using SST, remove the oil seal.
SST 09308-00010

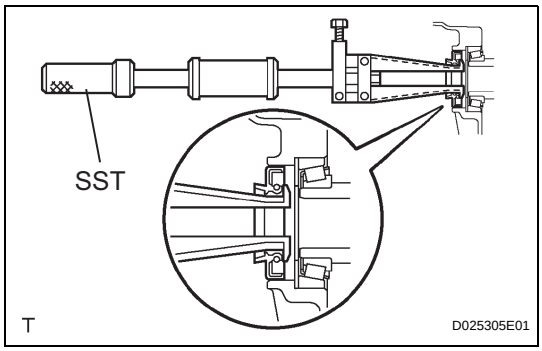

INSTALLATION

1. INSTALL TRANSMISSION CASE OIL SEAL

(a) Coat the lip of a new oil seal with MP grease.
(b) Using SST and a hammer, install the new oil seal.
SST 09309-37010
Drive in depth:
9.6 to 10.2 mm (0.378 to 0.402 in.)
NOTICE:
Do not damage the oil seal lip.

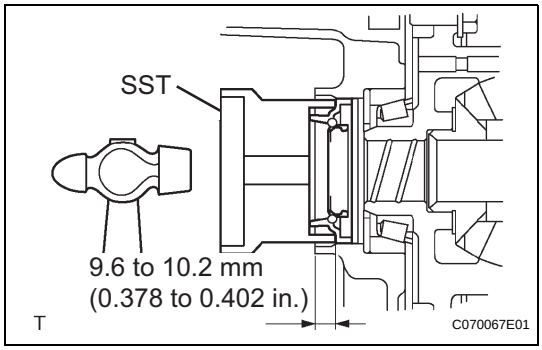

2. INSTALL TRANSAXLE CASE OIL SEAL

(a) Coat the lip of a new oil seal with MP grease.
(b) Using SST and a hammer, install the new oil seal.
SST 09710-26011 (09710-05061)
Drive in depth:
1.6 to 2.2 mm (0.063 to 0.087 in.)
NOTICE:
Do not damage the oil seal lip.

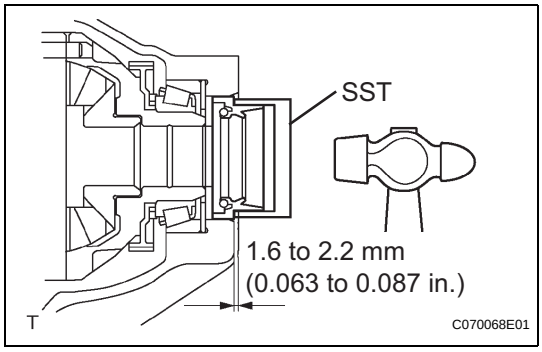

3. INSTALL FRONT DRIVE SHAFT ASSEMBLY LH (See page DS-13)

4. INSTALL FRONT DRIVE SHAFT ASSEMBLY RH (See page DS-14)

5. **INSTALL FRONT AXLE ASSEMBLY LH (See page DS-14)**

6. **INSTALL FRONT AXLE ASSEMBLY RH**
   HINT:
   The installation procedure for the RH side is the same as that for the LH side.

7. **INSTALL FRONT STABILIZER LINK ASSEMBLY LH (See page DS-14)**

8. **INSTALL FRONT STABILIZER LINK ASSEMBLY RH**
   HINT:
   The installation procedure for the RH side is the same as that for the LH side.

9. **INSTALL TIE ROD END SUB-ASSEMBLY LH (See page DS-15)**

10. **INSTALL TIE ROD END SUB-ASSEMBLY RH**
    HINT:
    The installation procedure for the RH side is the same as that for the LH side.

11. **INSTALL FRONT SUSPENSION ARM SUB-ASSEMBLY LOWER NO.1 LH (See page DS-14)**

12. **INSTALL FRONT SUSPENSION ARM SUB-ASSEMBLY LOWER NO.1 RH**
    HINT:
    The installation procedure for the RH side is the same as that for the LH side.

13. **INSTALL SPEED SENSOR FRONT LH (w/ ABS) (See page DS-15)**

14. **INSTALL SPEED SENSOR FRONT RH (w/ ABS)**
    HINT:
    The installation procedure for the RH side is the same as that for the LH side.

15. **INSTALL FRONT AXLE HUB LH NUT (See page DS-15)**

16. **INSTALL FRONT AXLE HUB RH NUT**
    HINT:
    The installation procedure for the RH side is the same as that for the LH side.

17. **INSTALL FRONT WHEELS**

18. **CONNECT CABLE TO NEGATIVE BATTERY TERMINAL**
    Torque: 5.4 N*m (55 kgf*cm, 48 in.*lbf)

19. **ADD TRANSAXLE OIL**

20. **INSPECT AND ADJUST TRANSAXLE OIL (See page MX-2)**

21. **INSPECT ABS SPEED SENSOR SIGNAL**
    (See page BC-14)

22. **INSPECT AND ADJUST FRONT WHEEL ALIGNMENT**
(See page SP-2)

23. **CHECK FOR TRANSAXLE OIL LEAKAGE**

FLOOR SHIFT LEVER ASSEMBLY

COMPONENTS

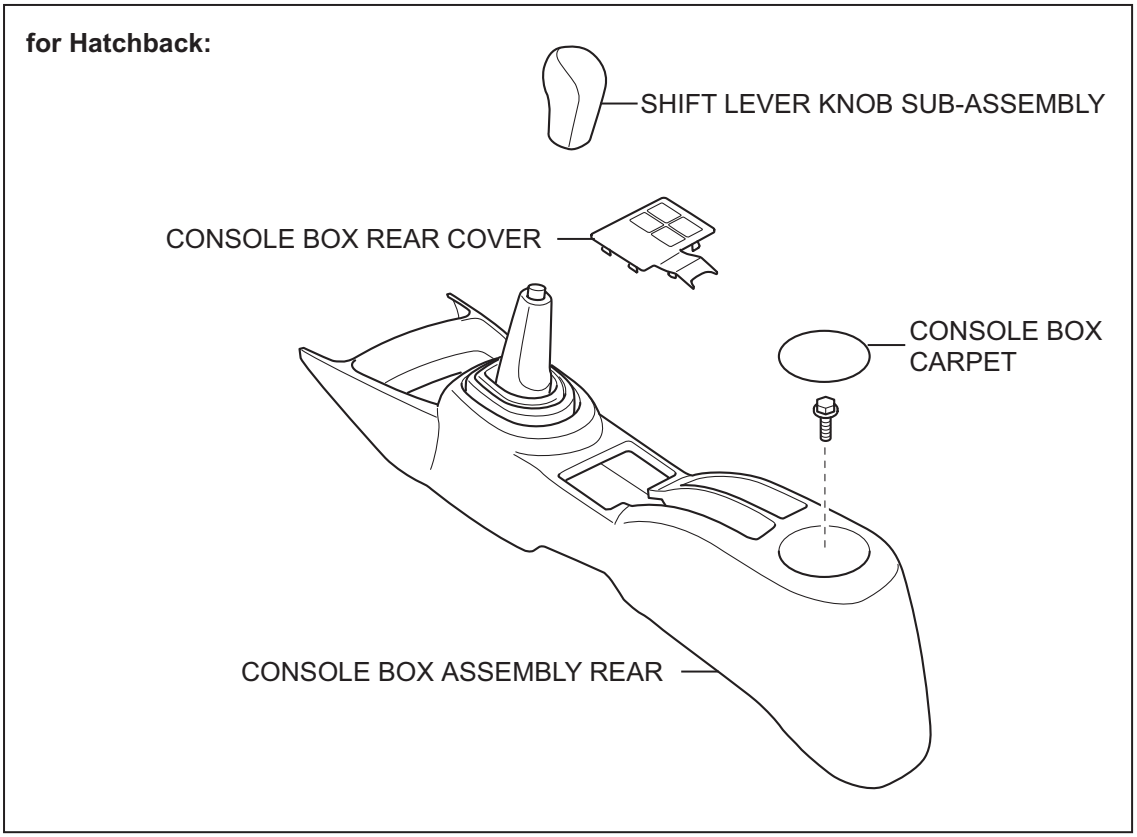

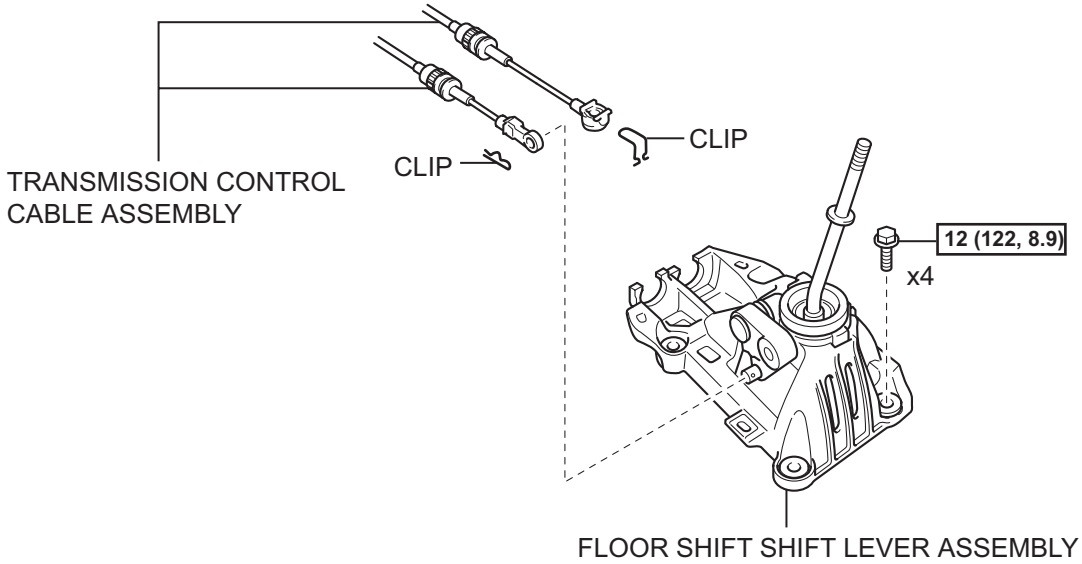

N*m (kgf*cm, ft*lbf) :Specified torque

Y

C106956E05

MX

for Sedan:

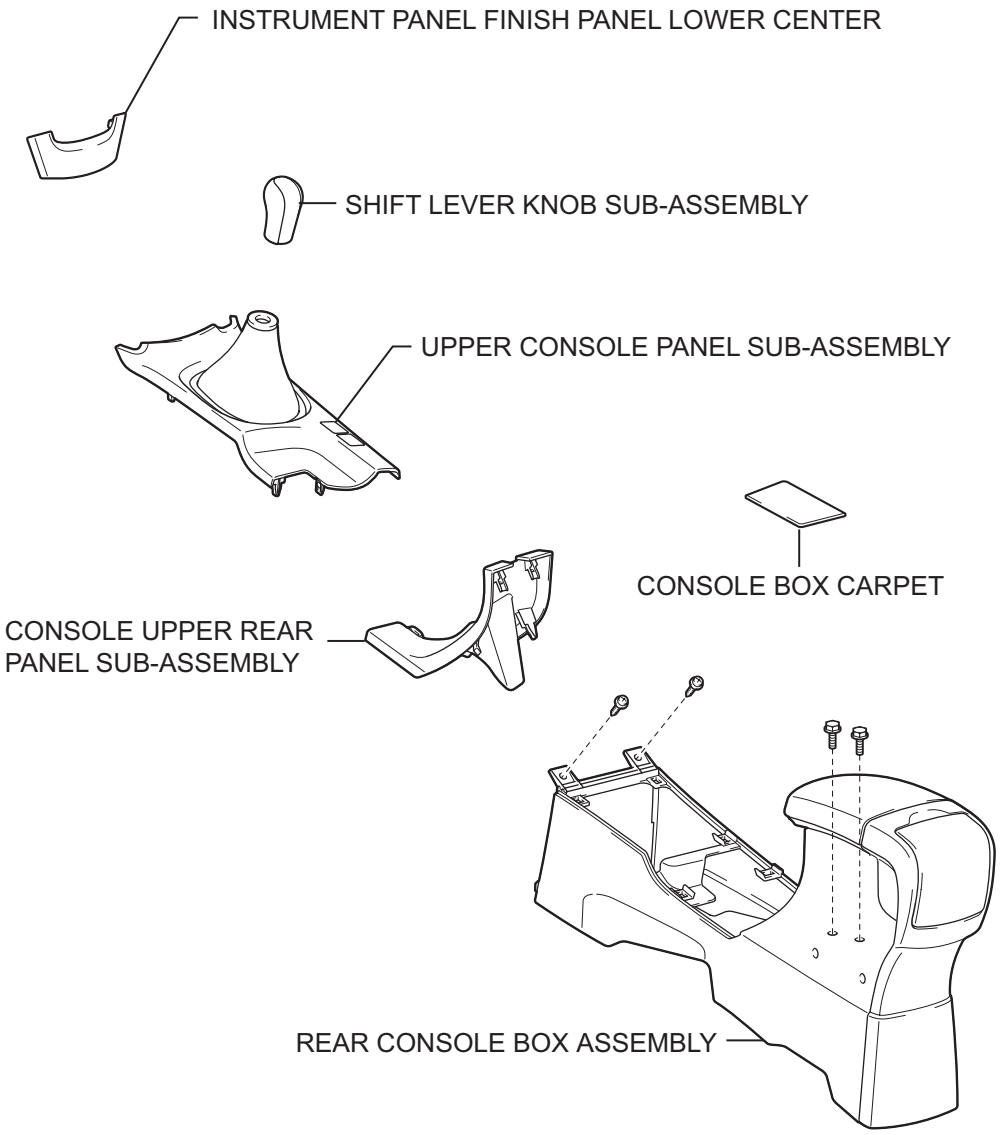

P

C136395E01

REMOVAL

1. **REMOVE SHIFT LEVER KNOB SUB-ASSEMBLY (for Hatchback) (See page IP-68)**
2. **REMOVE CONSOLE BOX ASSEMBLY REAR (for Hatchback) (See page IP-69)**
3. **REMOVE INSTRUMENT PANEL FINISH PANEL LOWER CENTER (for Sedan) (See page ME-138)**
4. **REMOVE SHIFT LEVER KNOB SUB-ASSEMBLY (for Sedan) (See page IP-84)**
5. **REMOVE UPPER CONSOLE PANEL SUB-ASSEMBLY (for Sedan) (See page IP-84)**
6. **REMOVE CONSOLE UPPER REAR PANEL SUB-ASSEMBLY (for Sedan) (See page IP-84)**
7. **REMOVE CONSOLE BOX CARPET (for Sedan) (See page IP-85)**
8. **REMOVE REAR CONSOLE BOX ASSEMBLY (for Sedan) (See page IP-85)**
9. **DISCONNECT TRANSMISSION CONTROL CABLE ASSEMBLY**
   (a) Remove the clip and disconnect the control select cable from the shift lever.
   (b) Turn the lock to release it and separate the control select cable from the shift lever retainer.
   (c) Disconnect the control shift cable from the shift lever.
   (d) Turn the lock to release it and separate the control shift cable from the shift lever retainer.
10. **REMOVE FLOOR SHIFT SHIFT LEVER ASSEMBLY**
    (a) Remove the 4 bolts and remove the shift lever.

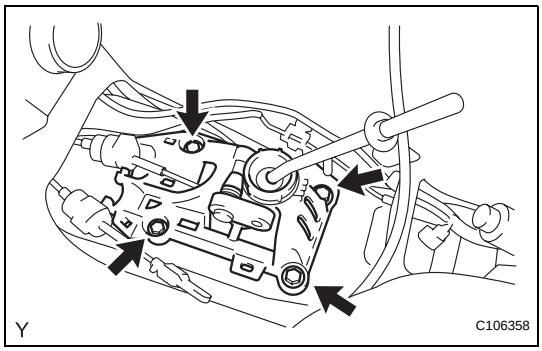

INSTALLATION

1. **INSTALL FLOOR SHIFT SHIFT LEVER ASSEMBLY**
   (a) Install the shift lever with the 4 bolts.
   Torque: 12 N*m (122 kgf*cm, 8.9 ft.*lbf)

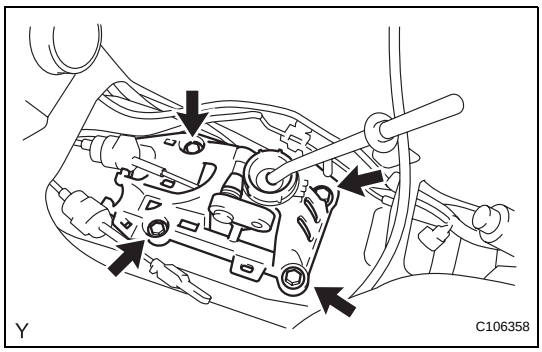

MX

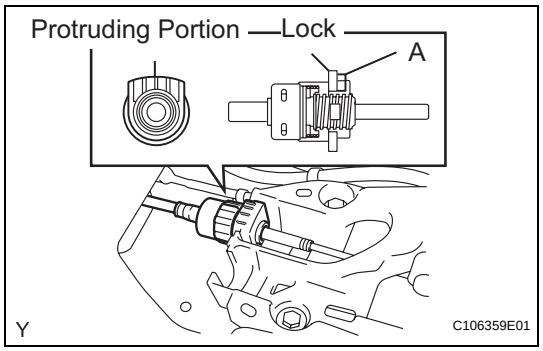

2. CONNECT TRANSMISSION CONTROL CABLE ASSEMBLY

(a) Install the control shift cable onto the shift lever retainer.

NOTICE:

- **Install the cable with the protruding portion of the cable outer facing upward.**
- **After installing, check that the lock of the cable outer is protruding beyond portion A, as shown in the illustration.**

(b) Connect the control shift cable to the shift lever.

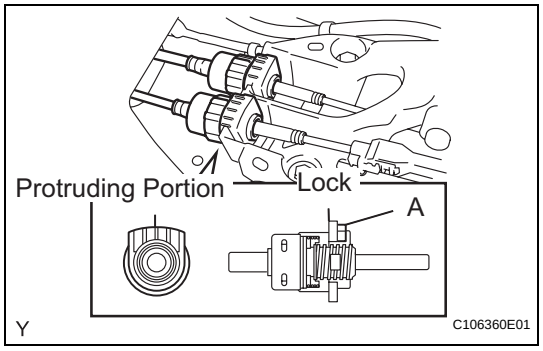

(c) Install the control select cable onto the shift lever retainer.

NOTICE:

- **Install the cable with the protruding portion of the cable outer facing upward.**
- **After installing, check that the lock of the cable outer is protruding beyond portion A, as shown in the illustration.**

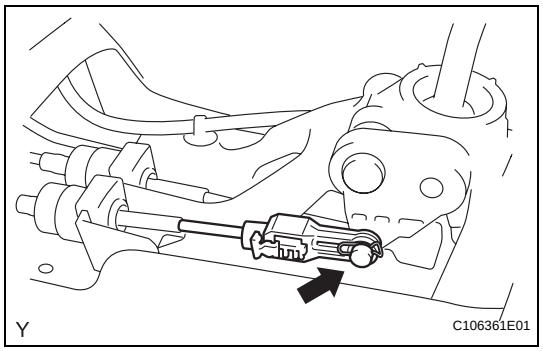

(d) Connect the control select cable to the shift lever.

NOTICE:

- **Connect the control select cable so that the adjusting mechanism lock of the control select cable is installed on the left side of the vehicle.**
- **Insert the clip in the direction shown in the illustration.**

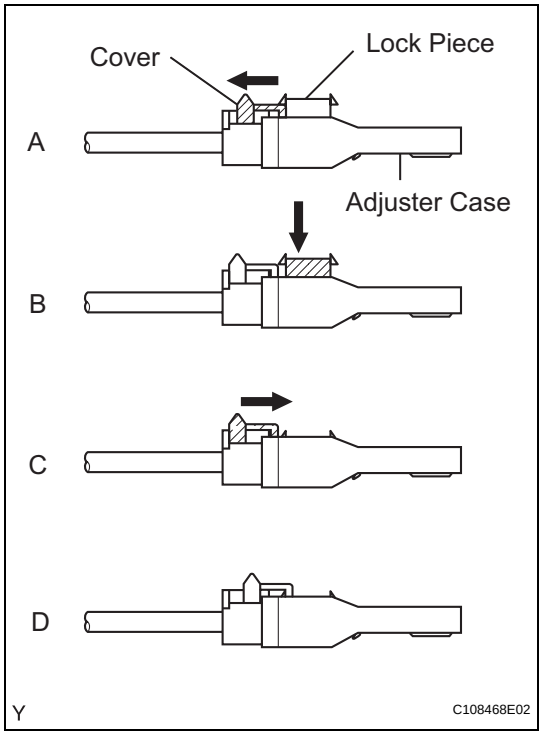

(e) Adjust the length of the control select cable.

(1) Slide the adjuster case cover in the direction shown in the illustration (Illustration A).

(2) Gently pull the cable rod toward the rear of the vehicle by hand to pull the cable taut.

(3) Press the lock piece into the adjuster case and lock it (Illustration B).

(4) Slide the cover in the direction shown in the illustration (Illustration C).

NOTICE:

Slide the cover past the protrusion of the lock piece (Illustration D).

3. INSTALL CONSOLE BOX ASSEMBLY REAR (for Hatchback) (See page IP-79)

4. INSTALL SHIFT LEVER KNOB SUB-ASSEMBLY (for Hatchback) (See page IP-80)

5. INSTALL REAR CONSOLE BOX ASSEMBLY (for Sedan) (See page IP-88)

6. **INSTALL CONSOLE BOX CARPET (for Sedan) (See page IP-88)**
7. **INSTALL CONSOLE UPPER REAR PANEL SUB-ASSEMBLY (for Sedan) (See page IP-89)**
8. **INSTALL UPPER CONSOLE PANEL SUB-ASSEMBLY (for Sedan) (See page IP-89)**
9. **INSTALL SHIFT LEVER KNOB SUB-ASSEMBLY (for Sedan) (See page IP-89)**
10. **INSTALL INSTRUMENT PANEL FINISH PANEL LOWER CENTER (for Sedan) (See page ME-142)**

TRANSMISSION CONTROL CABLE

COMPONENTS

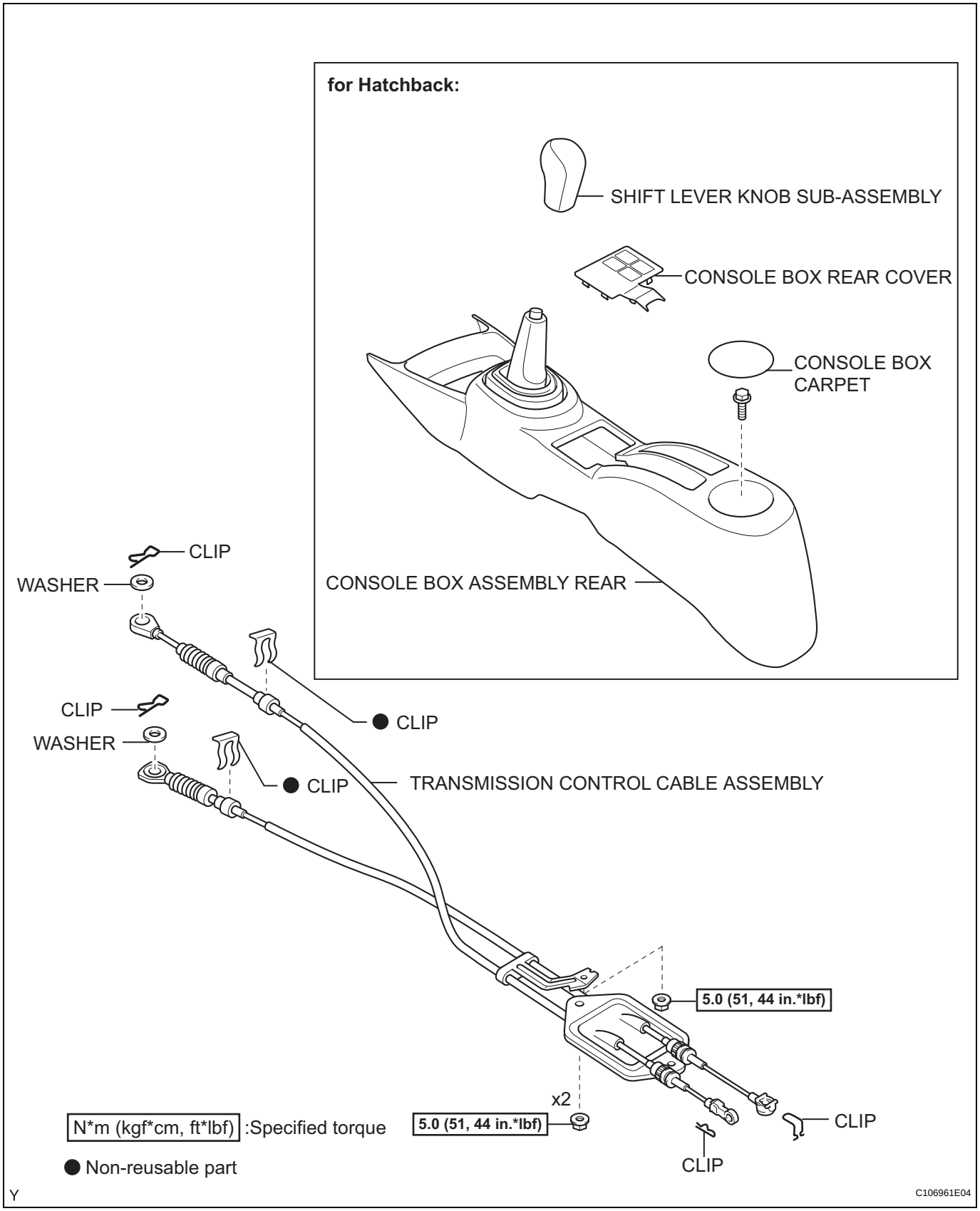

MX

for Sedan:

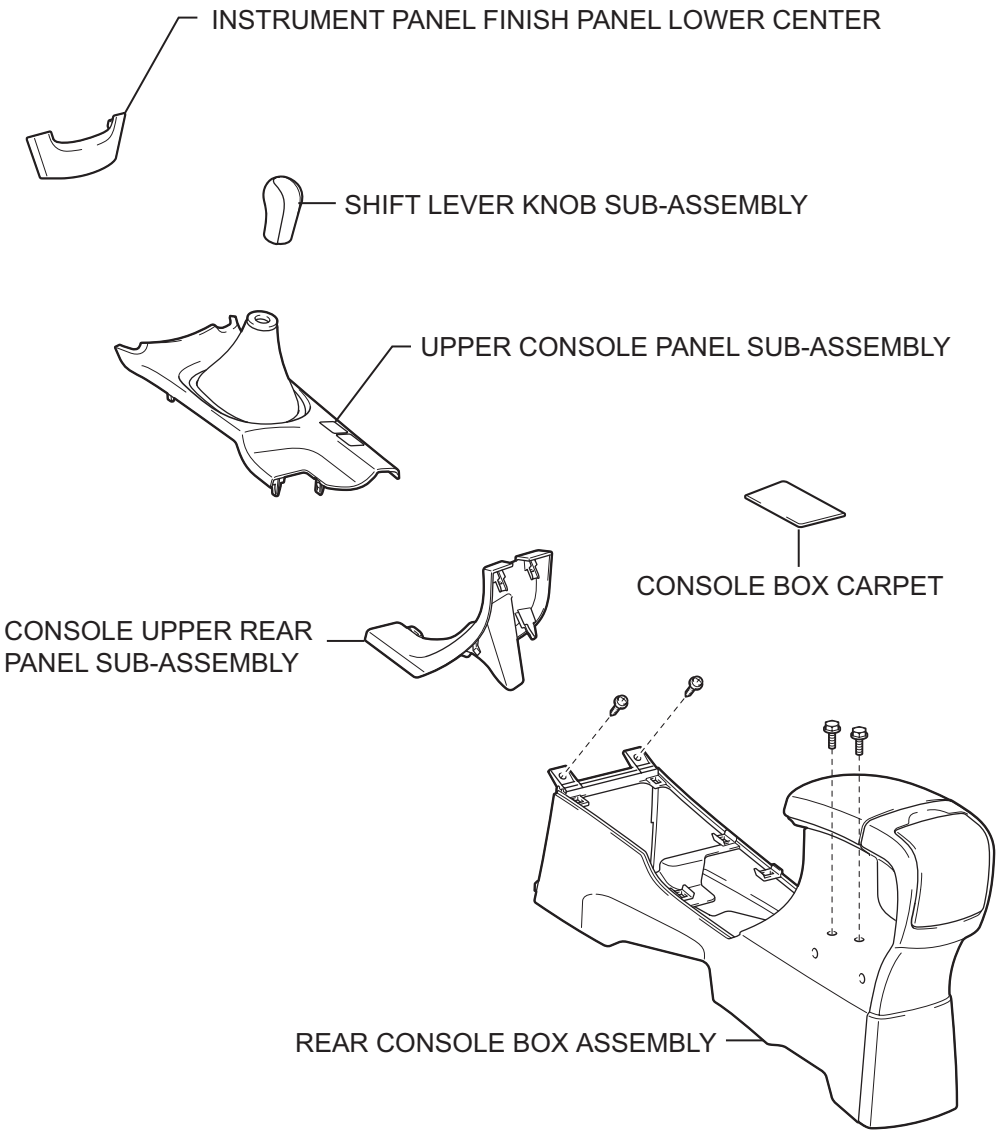

P

C136395E01

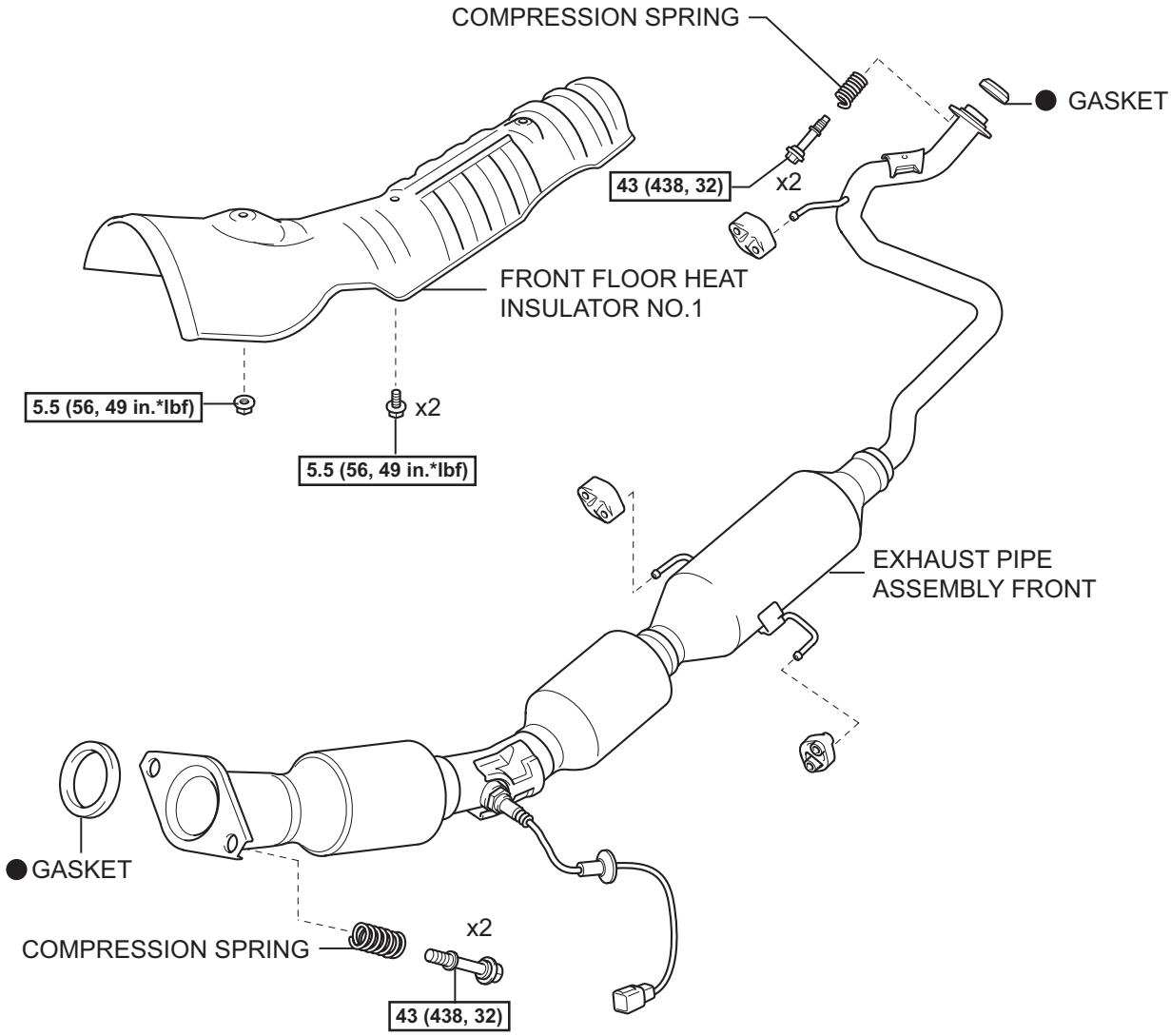

N*m (kgf*cm, ft*lbf) :Specified torque

● Non-reusable part

Y

C121106E01

REMOVAL

1. **DISCONNECT CABLE FROM NEGATIVE BATTERY TERMINAL**
2. **REMOVE SHIFT LEVER KNOB SUB-ASSEMBLY (for Hatchback) (See page IP-68)**
3. **REMOVE CONSOLE BOX ASSEMBLY REAR (for Hatchback) (See page IP-69)**
4. **REMOVE INSTRUMENT PANEL FINISH PANEL LOWER CENTER (for Sedan) (See page ME-138)**
5. **REMOVE SHIFT LEVER KNOB SUB-ASSEMBLY (for Sedan) (See page IP-84)**
6. **REMOVE UPPER CONSOLE PANEL SUB-ASSEMBLY (for Sedan) (See page IP-84)**
7. **REMOVE CONSOLE UPPER REAR PANEL SUB-ASSEMBLY (for Sedan) (See page IP-84)**
8. **REMOVE CONSOLE BOX CARPET (for Sedan) (See page IP-85)**
9. **REMOVE REAR CONSOLE BOX ASSEMBLY (for Sedan) (See page IP-85)**
10. **DISCONNECT OXYGEN SENSOR CONNECTOR**
11. **REMOVE EXHAUST PIPE ASSEMBLY FRONT (See page EX-5)**
12. **REMOVE FRONT FLOOR HEAT INSULATOR NO.1**
    (a) Remove the 2 bolts and nut and remove floor heat insulator No.1.
13. **REMOVE TRANSMISSION CONTROL CABLE ASSEMBLY**
    (a) Disconnect the control shift cable from the shift lever.
    (b) Turn the lock to release it and separate the control shift cable from the shift lever retainer.
    (c) Remove the clip and disconnect the control select cable from the shift lever.
    (d) Turn the lock to release it and separate the control select cable from the shift lever retainer.
    (e) Remove the 2 clips and the 2 washers, and disconnect the 2 cables from the transaxle.
    (f) Remove the 2 clips and disconnect the 2 cables from the control cable bracket.

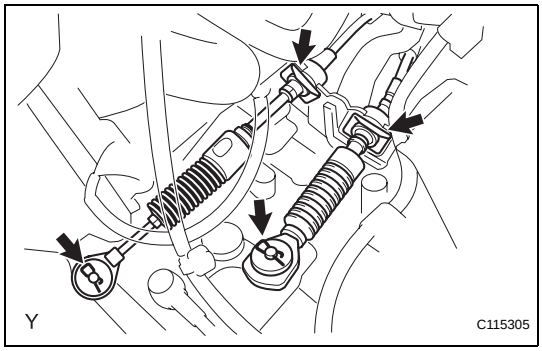

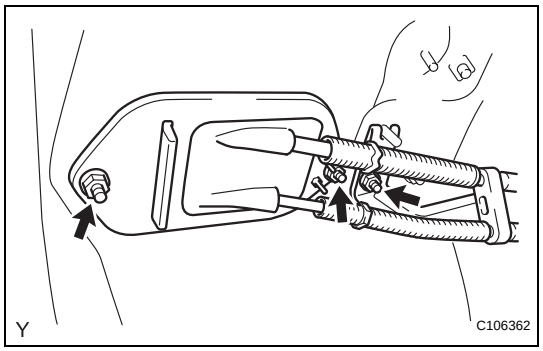

(g) Remove the 3 nuts and remove the transmission control cable.

INSTALLATION

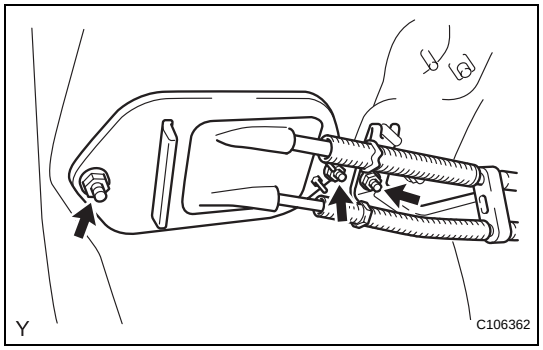

1. INSTALL TRANSMISSION CONTROL CABLE ASSEMBLY

(a) Install the control cable with the 3 nuts.
Torque: 5.0 N*m (51 kgf*cm, 44 in.*lbf)

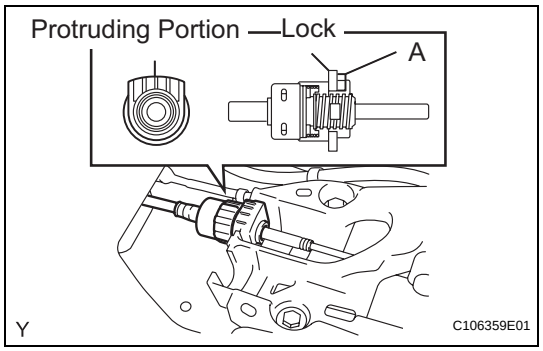

(b) Install the control shift cable onto the shift lever retainer.
NOTICE:
- **Install the cable with the protruding portion of the cable outer facing upward.**
- **After installing, check that the lock of the cable outer is protruding beyond portion A, as shown in the illustration.**

(c) Connect the control shift cable to the shift lever.

(d) Install the control shift cable onto the control cable bracket with a new clip.

(e) Connect the control shift cable to the transaxle through the washer.

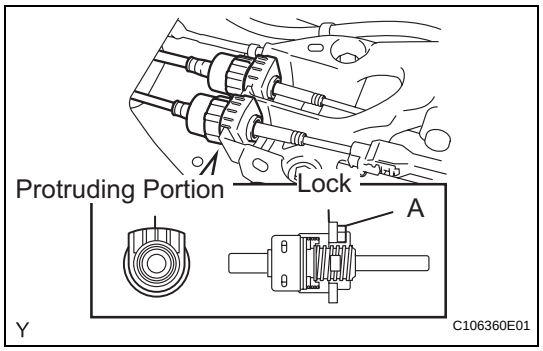

(f) Install the control select cable onto the shift lever retainer.
NOTICE:
- **Install the cable with the protruding portion of the cable outer facing upward.**
- **After installing, check that the lock of the cable outer is protruding beyond portion A, as shown in the illustration.**

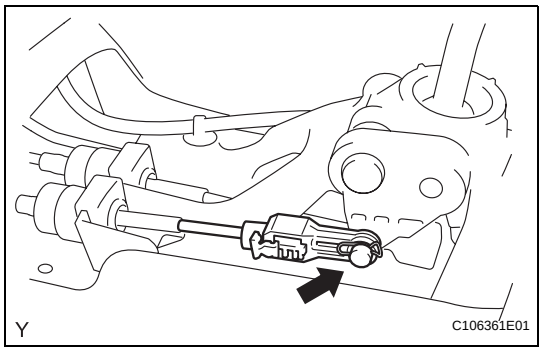

(g) Connect the control select cable to the shift lever with the clip.
NOTICE:
- **Connect the control select cable so that the adjusting mechanism lock of the control select cable is installed on the left side of the vehicle.**
- **Insert the clip in the direction shown in the illustration.**

(h) Install the control select cable onto the control cable bracket with a new clip.

(i) Connect the control select cable to the transaxle through the washer.

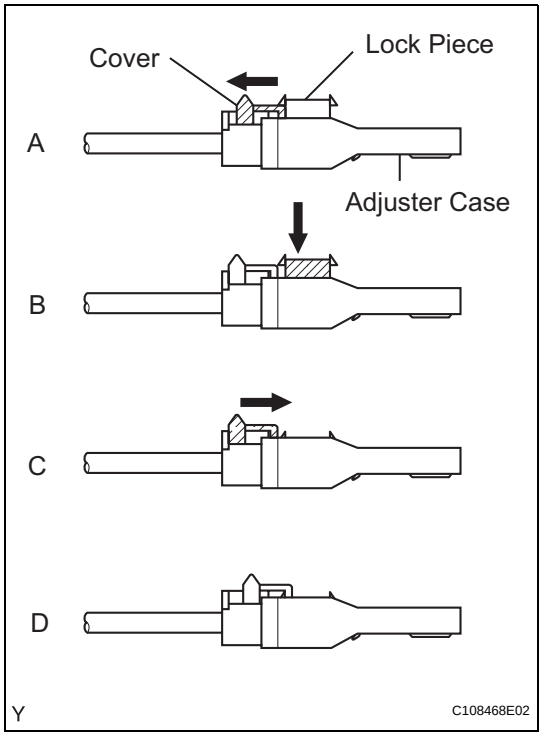

(j) Adjust the length of the control select cable.
(1) Slide the adjuster case cover in the direction shown in the illustration (Illustration A).
(2) Gently pull the cable rod toward the rear of the vehicle by hand to pull the cable taut.
(3) Press the lock piece into the adjuster case and lock it (Illustration B).
(4) Slide the cover in the direction shown in the illustration (Illustration C).
NOTICE:
Slide the cover past the protrusion portion of the lock piece (Illustration D).

2. INSTALL FRONT FLOOR HEAT INSULATOR NO.1
(a) Install floor heat insulator No. 1 with the 2 bolts and nut.
Torque: 5.5 N*m (56 kgf*cm, 49 in.*lbf)

3. INSTALL EXHAUST PIPE ASSEMBLY FRONT (See page EX-8)

4. CONNECT OXYGEN SENSOR CONNECTOR

5. INSTALL CONSOLE BOX ASSEMBLY REAR (for Hatchback) (See page IP-79)

6. INSTALL SHIFT LEVER KNOB SUB-ASSEMBLY (for Hatchback) (See page IP-80)

7. INSTALL REAR CONSOLE BOX ASSEMBLY (for Sedan) (See page IP-88)

8. INSTALL CONSOLE BOX CARPET (for Sedan) (See page IP-88)

9. INSTALL CONSOLE UPPER REAR PANEL SUB-ASSEMBLY (for Sedan) (See page IP-89)

10. INSTALL UPPER CONSOLE PANEL SUB-ASSEMBLY (for Sedan) (See page IP-89)

11. INSTALL SHIFT LEVER KNOB SUB-ASSEMBLY (for Sedan) (See page IP-89)

12. INSTALL INSTRUMENT PANEL FINISH PANEL LOWER CENTER (for Sedan) (See page ME-142)

13. **CONNECT CABLE TO NEGATIVE BATTERY TERMINAL**
    Torque: 5.4 N*m (55 kgf*cm, 48 in.*lbf)

MANUAL TRANSAXLE ASSEMBLY

COMPONENTS

for Hatchback:

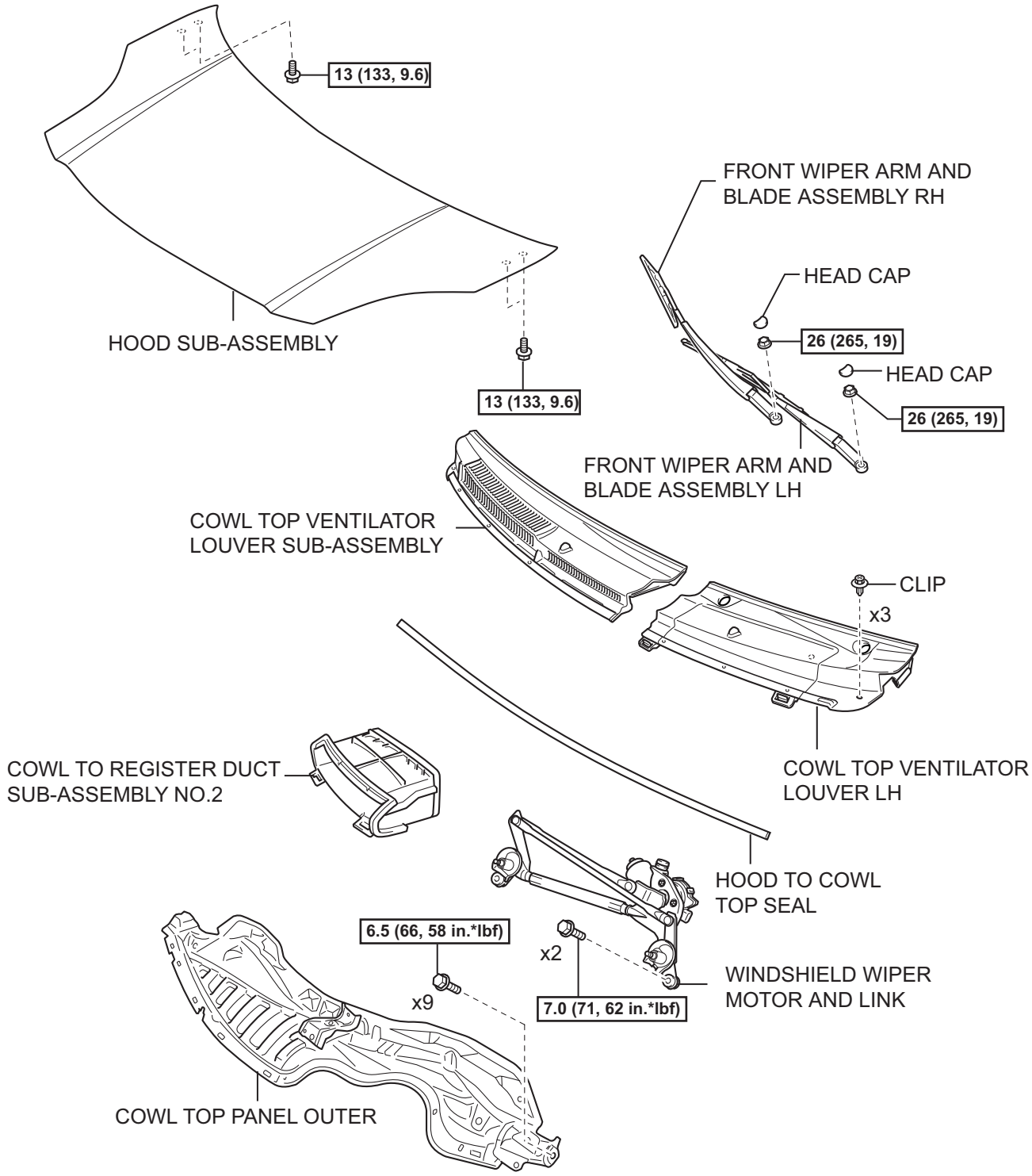

N*m (kgf*cm, ft*lbf) :Specified torque

Y

C116836E06

MX

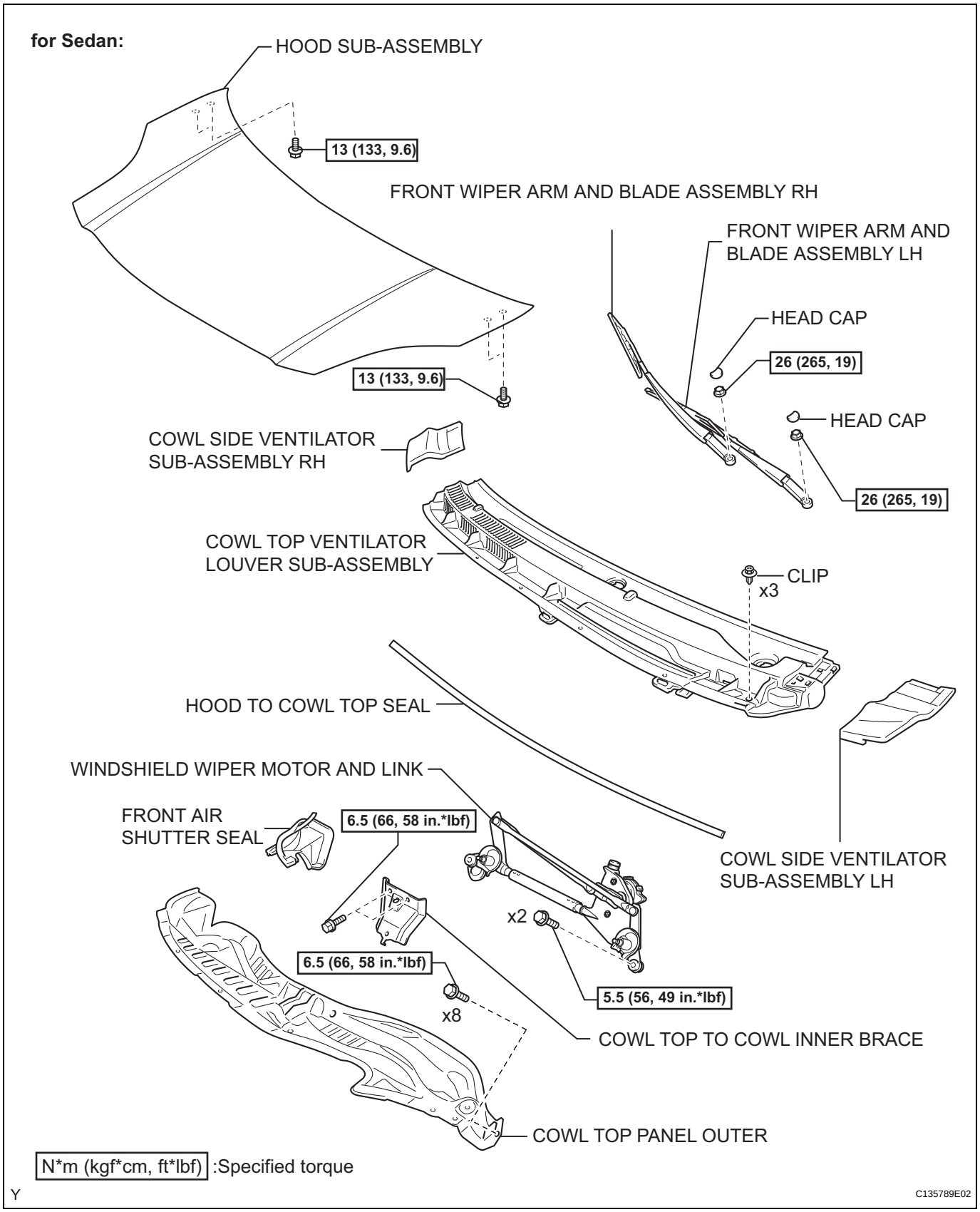
for Sedan:
HOOD SUB-ASSEMBLY
13 (133, 9.6)
FRONT WIPER ARM AND BLADE ASSEMBLY RH
FRONT WIPER ARM AND BLADE ASSEMBLY LH
HEAD CAP
26 (265, 19)
13 (133, 9.6)
HEAD CAP
COWL SIDE VENTILATOR SUB-ASSEMBLY RH
26 (265, 19)
COWL TOP VENTILATOR LOUVER SUB-ASSEMBLY
CLIP
x3
HOOD TO COWL TOP SEAL
WINDSHIELD WIPER MOTOR AND LINK
FRONT AIR SHUTTER SEAL
6.5 (66, 58 in.*lbf)
COWL SIDE VENTILATOR SUB-ASSEMBLY LH
x2
6.5 (66, 58 in.*lbf)
5.5 (56, 49 in.*lbf)
x8
COWL TOP TO COWL INNER BRACE
COWL TOP PANEL OUTER
N*m (kgf*cm, ft*lbf) :Specified torque
Y
C135789E02

MX

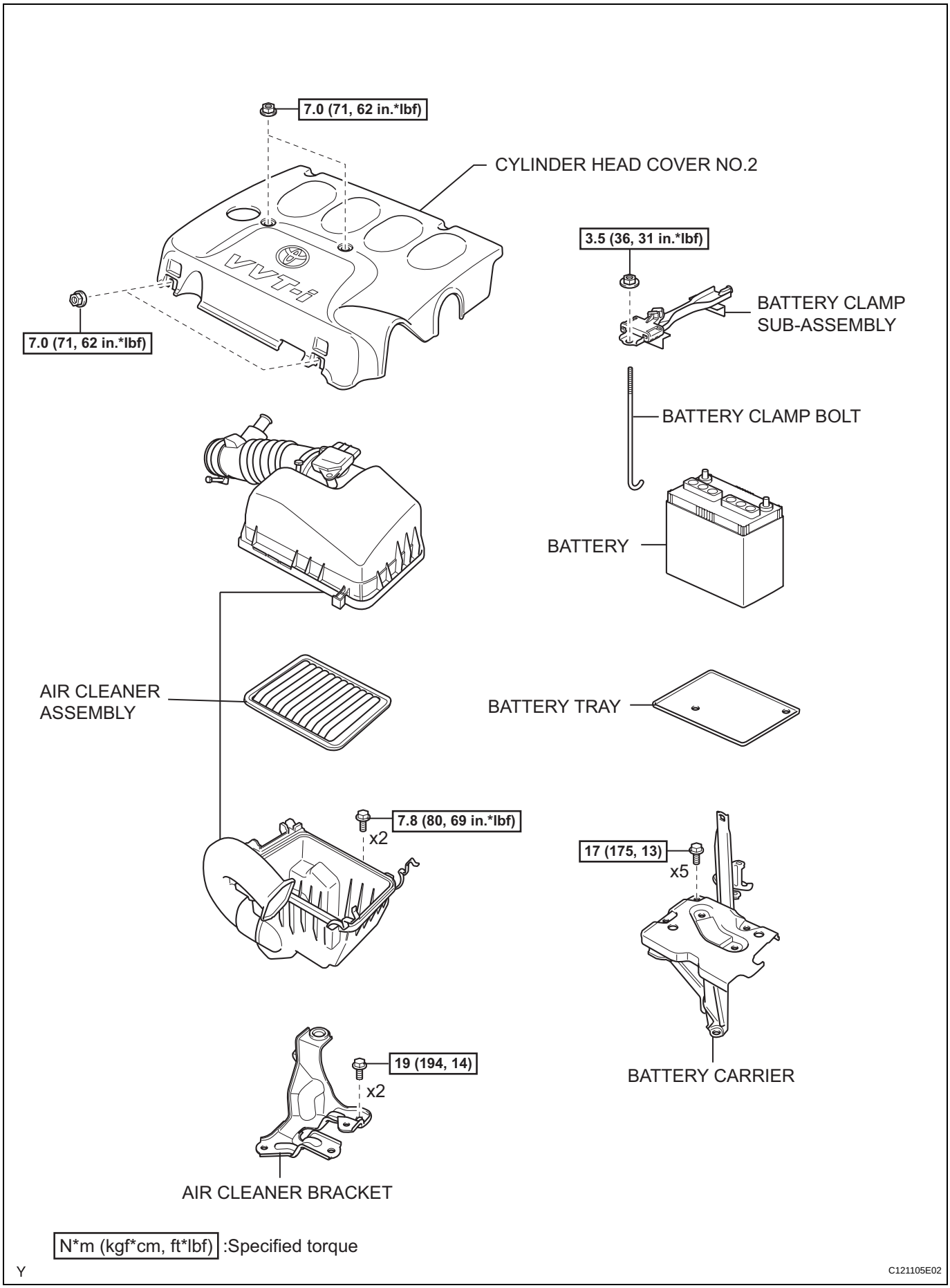
7.0 (71, 62 in.*lbf)
CYLINDER HEAD COVER NO.2
3.5 (36, 31 in.*lbf)
BATTERY CLAMP SUB-ASSEMBLY
7.0 (71, 62 in.*lbf)
BATTERY CLAMP BOLT
BATTERY
AIR CLEANER ASSEMBLY
BATTERY TRAY
7.8 (80, 69 in.*lbf)
x2
17 (175, 13)
x5
19 (194, 14)
x2
BATTERY CARRIER
AIR CLEANER BRACKET
N*m (kgf*cm, ft*lbf) :Specified torque
Y
C121105E02

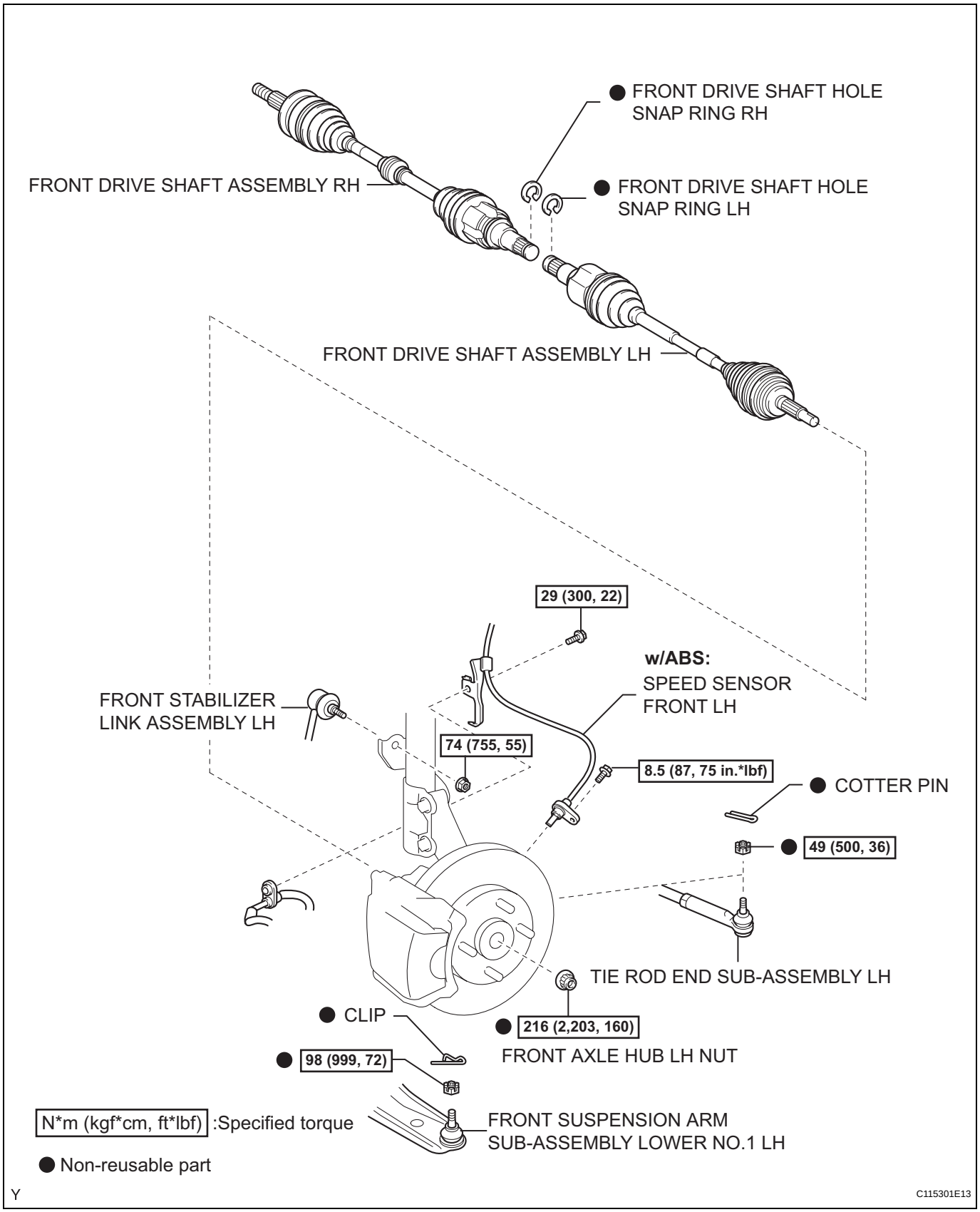
● FRONT DRIVE SHAFT HOLE SNAP RING RH
FRONT DRIVE SHAFT ASSEMBLY RH
● FRONT DRIVE SHAFT HOLE SNAP RING LH
FRONT DRIVE SHAFT ASSEMBLY LH
29 (300, 22)
w/ABS:
SPEED SENSOR FRONT LH
FRONT STABILIZER LINK ASSEMBLY LH
74 (755, 55)
8.5 (87, 75 in.*lbf)
● COTTER PIN
● 49 (500, 36)
TIE ROD END SUB-ASSEMBLY LH
● CLIP
● 216 (2,203, 160)
FRONT AXLE HUB LH NUT
● 98 (999, 72)
N*m (kgf*cm, ft*lbf) :Specified torque
FRONT SUSPENSION ARM SUB-ASSEMBLY LOWER NO.1 LH
● Non-reusable part
Y
C115301E13

MX

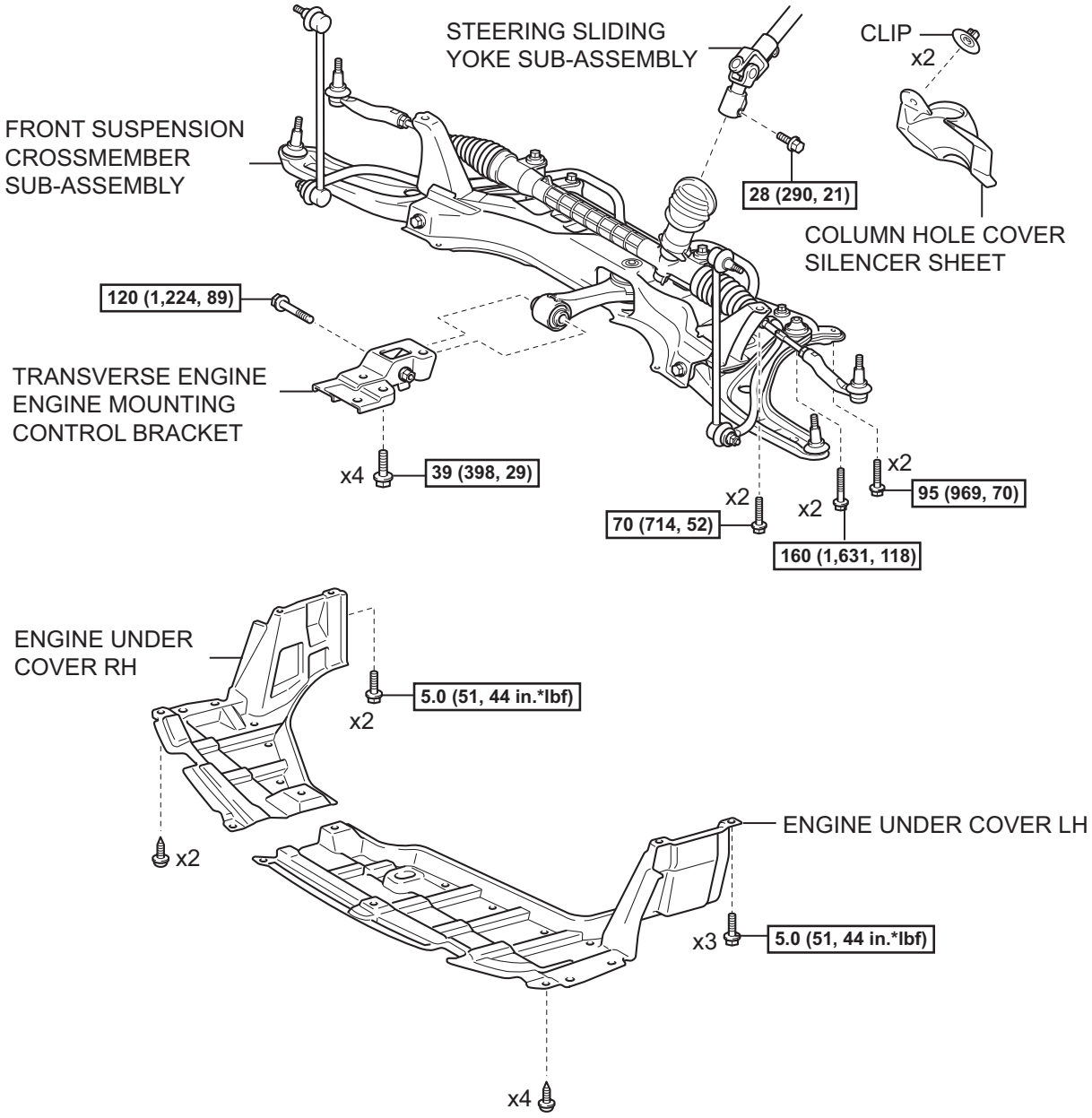

N*m (kgf*cm, ft*lbf) :Specified torque

Y

C116860E01

MX

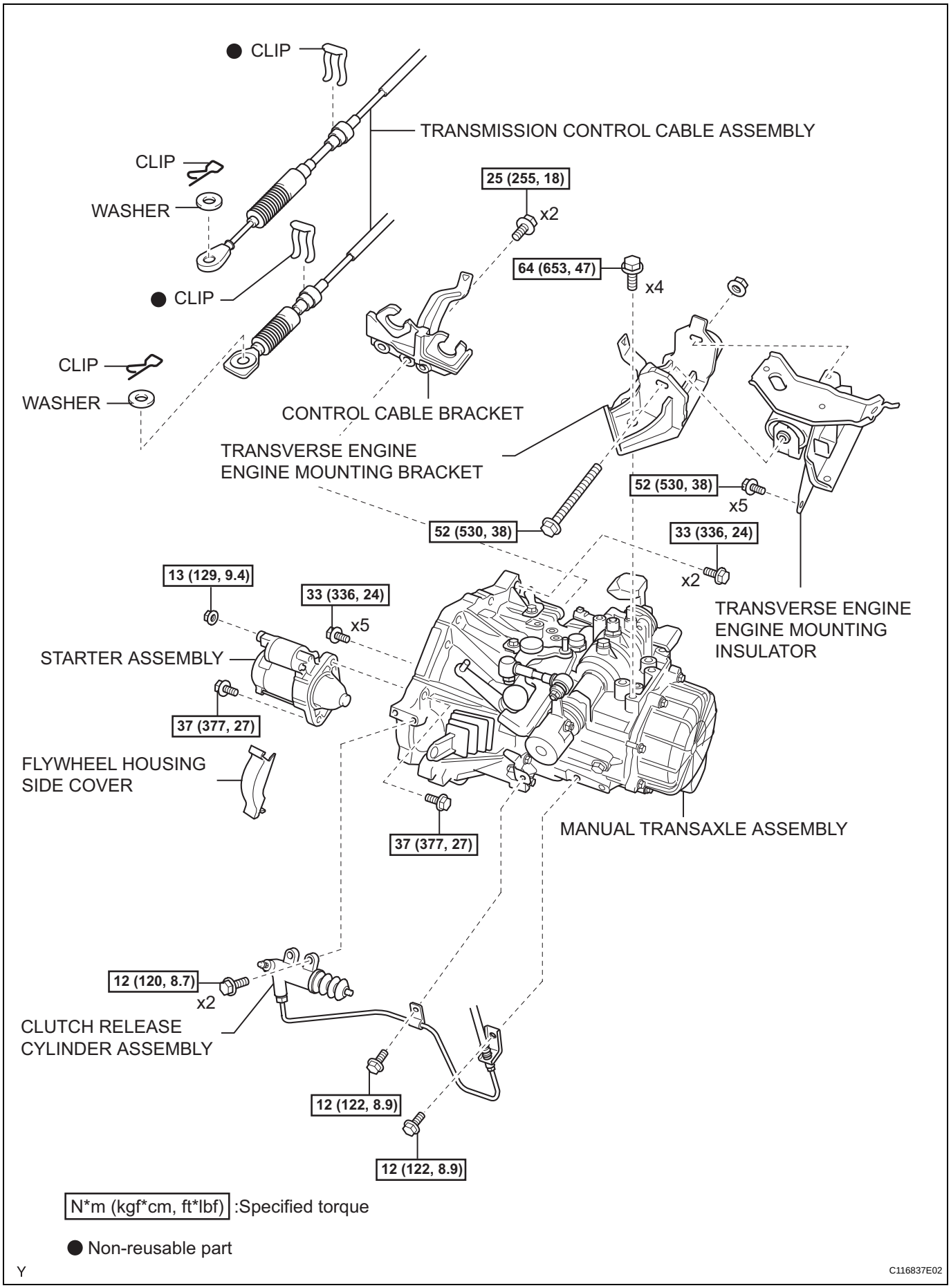
● CLIP
TRANSMISSION CONTROL CABLE ASSEMBLY
CLIP
WASHER
25 (255, 18)
x2
64 (653, 47)
x4
● CLIP
CLIP
WASHER
CONTROL CABLE BRACKET
TRANSVERSE ENGINE
ENGINE MOUNTING BRACKET
52 (530, 38)
x5
52 (530, 38)
33 (336, 24)
x2
13 (129, 9.4)
33 (336, 24)
x5
TRANSVERSE ENGINE
ENGINE MOUNTING
INSULATOR
STARTER ASSEMBLY
37 (377, 27)
FLYWHEEL HOUSING
SIDE COVER
37 (377, 27)
MANUAL TRANSAXLE ASSEMBLY
12 (120, 8.7)
x2
CLUTCH RELEASE
CYLINDER ASSEMBLY
12 (122, 8.9)
12 (122, 8.9)
N*m (kgf*cm, ft*lbf) :Specified torque
● Non-reusable part
Y
C116837E02

MX

REMOVAL

1. **DISCONNECT CABLE FROM NEGATIVE BATTERY TERMINAL**
2. **REMOVE COLUMN HOLE COVER SILENCER SHEET (See page PS-74)**
3. **REMOVE STEERING SLIDING YOKE SUB-ASSEMBLY (See page PS-74)**
4. **REMOVE FRONT WHEELS**
5. **REMOVE ENGINE UNDER COVER LH**
6. **REMOVE ENGINE UNDER COVER RH**
7. **DRAIN TRANSAXLE OIL**
   (a) Remove the filler plug and the gasket.
   (b) Remove the drain plug and the gasket, and then drain the manual transaxle oil.
   (c) Install a new gasket and the drain plug.
   Torque: 39 N*m (400 kgf*cm, 29 ft.*lbf)
8. **REMOVE HOOD SUB-ASSEMBLY**
9. **REMOVE FRONT WIPER ARM AND BLADE ASSEMBLY LH (See page WW-17)**
10. **REMOVE FRONT WIPER ARM AND BLADE ASSEMBLY RH (See page WW-17)**
11. **REMOVE HOOD TO COWL TOP SEAL (See page WW-18)**
12. **REMOVE COWL TOP VENTILATOR LOUVER SUB-ASSEMBLY (for Hatchback) (See page WW-18)**
13. **REMOVE COWL TOP VENTILATOR LOUVER LH (for Hatchback) (See page WW-18)**
14. **REMOVE WINDSHIELD WIPER MOTOR AND LINK (for Hatchback) (See page WW-19)**
15. **REMOVE COWL TO REGISTER DUCT SUB-ASSEMBLY NO.2 (for Hatchback) (See page EM-122)**
16. **REMOVE COWL TOP PANEL OUTER (for Hatchback) (See page EM-123)**
17. **REMOVE COWL SIDE VENTILATOR SUB-ASSEMBLY LH (for Sedan) (See page WW-10)**
18. **REMOVE COWL SIDE VENTILATOR SUB-ASSEMBLY RH (for Sedan) (See page WW-10)**
19. **REMOVE COWL TOP VENTILATOR LOUVER SUB-ASSEMBLY (for Sedan) (See page WW-10)**
20. **REMOVE WINDSHIELD WIPER MOTOR AND LINK (for Sedan) (See page WW-10)**
21. **REMOVE FRONT AIR SHUTTER SEAL (for Sedan) (See page EM-123)**

22. REMOVE COWL TOP PANEL OUTER (for Sedan) (See page EM-123)

23. REMOVE CYLINDER HEAD COVER NO.2 (See page IG-9)

24. REMOVE AIR CLEANER ASSEMBLY (See page EM-124)

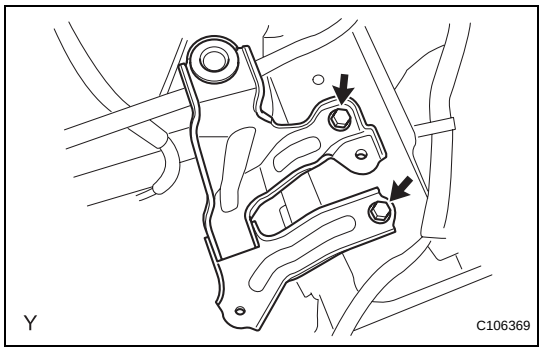

25. REMOVE AIR CLEANER BRACKET

(a) Remove the 2 bolts and the air cleaner bracket.

26. REMOVE BATTERY CLAMP SUB-ASSEMBLY

27. REMOVE BATTERY

28. REMOVE BATTERY TRAY

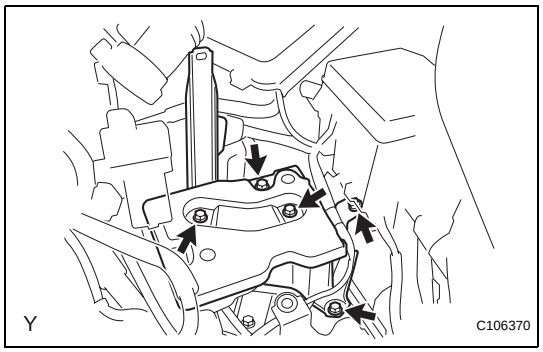

29. REMOVE BATTERY CARRIER

(a) Remove the 5 bolts and the battery carrier.

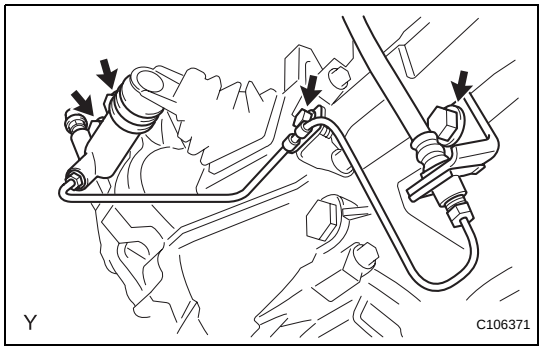

30. SEPARATE CLUTCH RELEASE CYLINDER ASSEMBLY

(a) Remove the 4 bolts, then separate the clutch release cylinder.
HINT:
Suspend the clutch release cylinder with a piece of rope so as not to overload the clutch pipe.

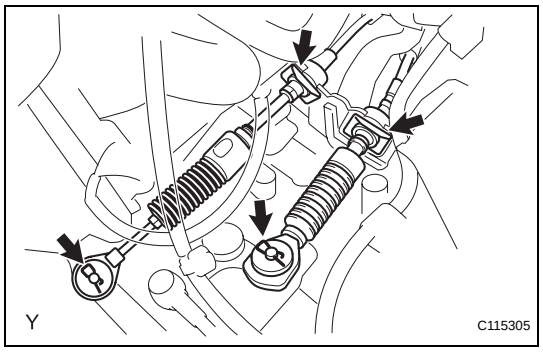

31. SEPARATE TRANSMISSION CONTROL CABLE ASSEMBLY

(a) Remove the 2 clips and the 2 washers, and disconnect the 2 cables from the transaxle.

(b) Remove the 2 clips and disconnect the 2 cables from the control cable bracket.

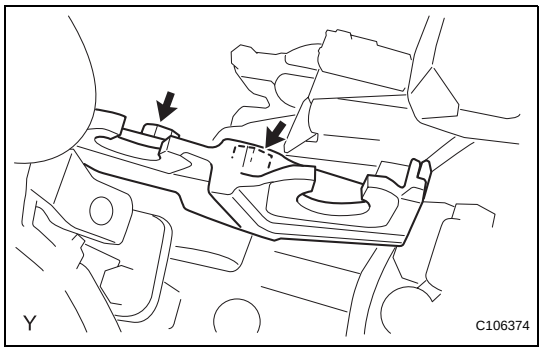

32. REMOVE CONTROL CABLE BRACKET
(a) Remove the 2 bolts and the control cable bracket.

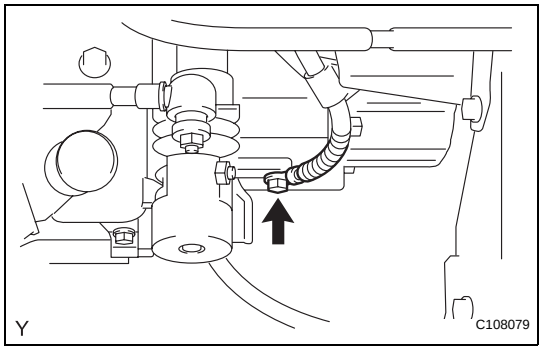

33. DISCONNECT WIRE HARNESS
(a) Remove the bolt, then disconnect the wire harness.

34. DISCONNECT CONNECTOR
(a) Disconnect the back-up light switch connector.

35. REMOVE STARTER ASSEMBLY (See page ST-9)

36. REMOVE FRONT AXLE HUB LH NUT (See page DS-3)

37. REMOVE FRONT AXLE HUB RH NUT
HINT:
The removal procedure for the RH side is the same as that for the LH side.

38. SEPARATE SPEED SENSOR FRONT LH (w/ ABS) (See page DS-3)

39. SEPARATE SPEED SENSOR FRONT RH (w/ ABS)
HINT:
The separation procedure for the RH side is the same as that for the LH side.

40. SEPARATE FRONT SUSPENSION ARM SUB-ASSEMBLY LOWER NO.1 LH (See page DS-4)

41. SEPARATE FRONT SUSPENSION ARM SUB-ASSEMBLY LOWER NO.1 RH
HINT:
The separation procedure for the RH side is the same as that for the LH side.

42. SEPARATE TIE ROD END SUB-ASSEMBLY LH (See page DS-3)

43. SEPARATE TIE ROD END SUB-ASSEMBLY RH
HINT:
The separation procedure for the RH side is the same as that for the LH side.

44. SEPARATE FRONT STABILIZER LINK ASSEMBLY LH (See page DS-4)

45. SEPARATE FRONT STABILIZER LINK ASSEMBLY RH
HINT:
The separation procedure for the RH side is the same as that for the LH side.

46. SEPARATE FRONT AXLE ASSEMBLY LH (See page DS-4)

47. SEPARATE FRONT AXLE ASSEMBLY RH

HINT:
The separation procedure for the RH side is the same as that for the LH side.

48. REMOVE FRONT DRIVE SHAFT ASSEMBLY LH (See page DS-5)

49. REMOVE FRONT DRIVE SHAFT ASSEMBLY RH (See page DS-5)

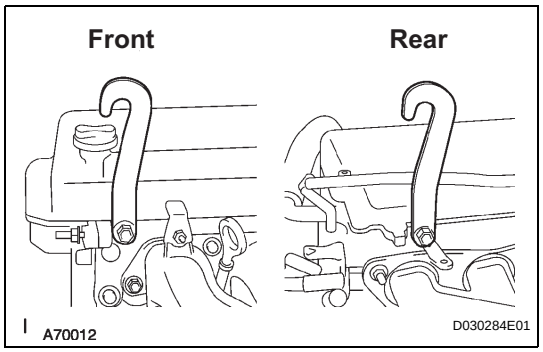

50. SUSPEND ENGINE ASSEMBLY

(a) Install the 2 hangers in the correct direction.

(b) Attach the engine chain hoist to the hangers.

CAUTION:
Do not attempt to hang the engine by hooking the chain to any other part.
Parts No.:
Engine Hanger: 12281-21010
Bolt:
91642-81025
Torque: 40 N*m (408 kgf*cm, 29 ft.*lbf)

51. REMOVE FRONT SUSPENSION CROSSMEMBER SUB-ASSEMBLY (See page PS-76)

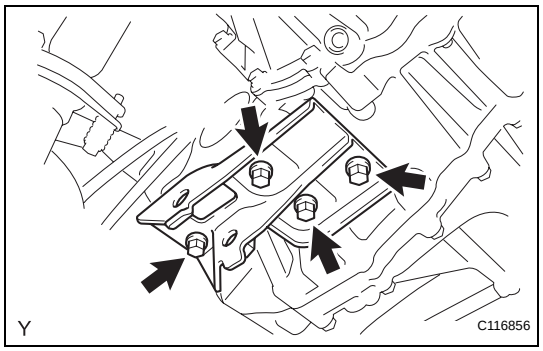

52. REMOVE TRANSVERSE ENGINE ENGINE MOUNTING CONTROL BRACKET

(a) Remove the 4 bolts and the engine mounting control bracket.

53. SUPPORT MANUAL TRANSAXLE ASSEMBLY

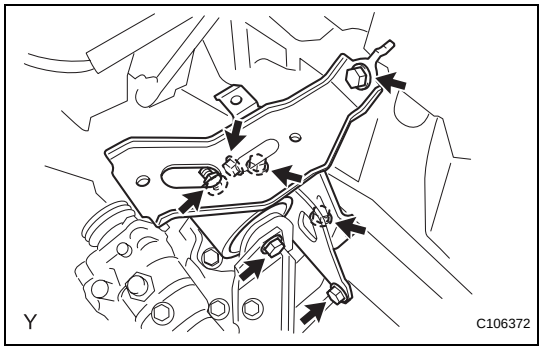

54. REMOVE TRANSVERSE ENGINE ENGINE MOUNTING INSULATOR

(a) Remove the bolt and nut, then separate the engine mounting insulator LH.

(b) Remove the 5 bolts and the engine mounting insulator LH.

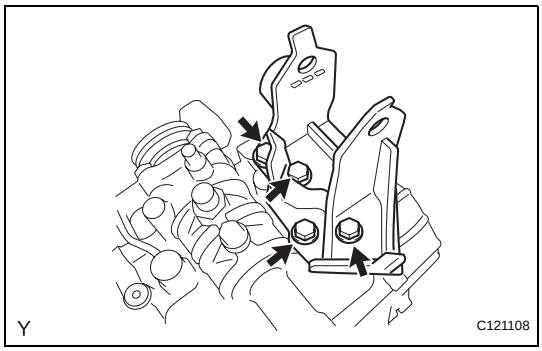

55. REMOVE TRANSVERSE ENGINE ENGINE MOUNTING BRACKET

(a) Remove the 4 bolts and the engine mounting bracket LH.

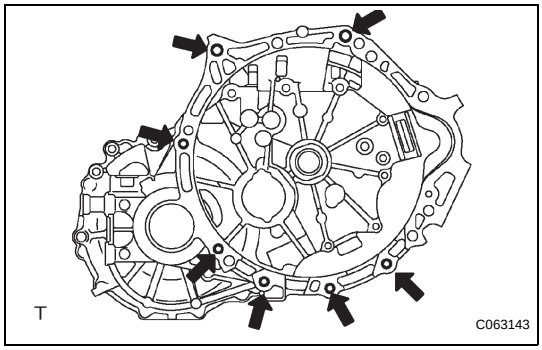

56. REMOVE MANUAL TRANSAXLE ASSEMBLY

(a) Remove the 7 bolts and the manual transaxle.

INSTALLATION

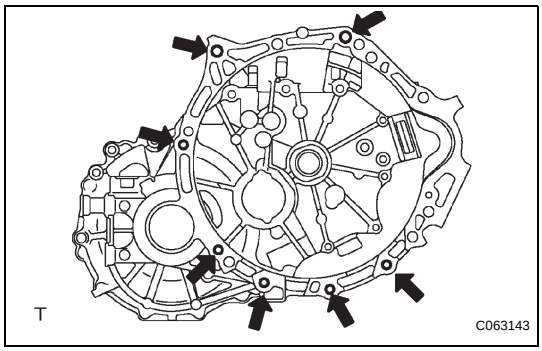

1. INSTALL MANUAL TRANSAXLE ASSEMBLY

(a) Align the input shaft with the clutch disc and install the manual transaxle onto the engine.

(b) Install the 7 bolts.
Torque: 33 N*m (336 kgf*cm, 24 ft.*lbf)

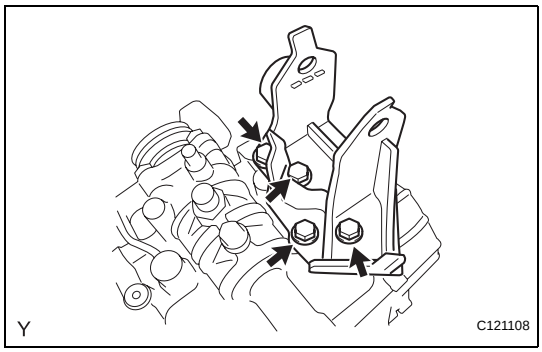

2. INSTALL TRANSVERSE ENGINE ENGINE MOUNTING BRACKET

(a) Install the engine mounting bracket LH with the 4 bolts.
Torque: 64 N*m (653 kgf*cm, 47 ft.*lbf)

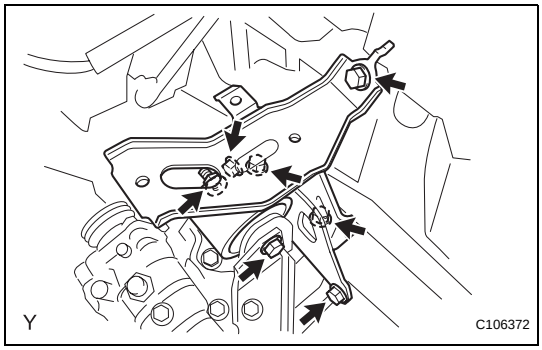

3. INSTALL TRANSVERSE ENGINE ENGINE MOUNTING INSULATOR

(a) Install the engine mounting insulator LH with the 5 bolts.
Torque: 52 N*m (530 kgf*cm, 38 ft.*lbf)

(b) Install the engine mounting bracket LH and engine insulator LH with the bolt and nut.
Torque: 52 N*m (530 kgf*cm, 38 ft.*lbf)

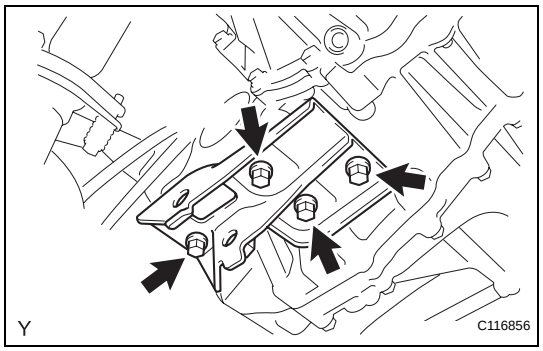

4. **INSTALL TRANSVERSE ENGINE ENGINE MOUNTING CONTROL BRACKET**
   (a) Install the engine mounting control bracket with the 4 bolts.
   Torque: 39 N*m (398 kgf*cm, 29 ft.*lbf)
5. **INSTALL FRONT SUSPENSION CROSSMEMBER SUB-ASSEMBLY (See page PS-77)**
6. **INSTALL FRONT DRIVE SHAFT ASSEMBLY LH (See page DS-13)**
7. **INSTALL FRONT DRIVE SHAFT ASSEMBLY RH (See page DS-14)**
8. **INSTALL FRONT AXLE ASSEMBLY LH**
9. **INSTALL FRONT AXLE ASSEMBLY RH (See page DS-14)**
10. **INSTALL FRONT STABILIZER LINK ASSEMBLY LH (See page DS-14)**
11. **INSTALL FRONT STABILIZER LINK ASSEMBLY RH**
    HINT:
    The installation procedure for the RH side is the same as that for the LH side.
12. **INSTALL TIE ROD END SUB-ASSEMBLY LH (See page DS-15)**
13. **INSTALL TIE ROD END SUB-ASSEMBLY RH**
    HINT:
    The installation procedure for the RH side is the same as that for the LH side.
14. **INSTALL FRONT SUSPENSION ARM SUB-ASSEMBLY LOWER NO.1 LH (See page DS-14)**
15. **INSTALL FRONT SUSPENSION ARM SUB-ASSEMBLY LOWER NO.1 RH**
    HINT:
    The installation procedure for the RH side is the same as that for the LH side.
16. **INSTALL SPEED SENSOR FRONT LH (w/ ABS) (See page DS-15)**
17. **INSTALL SPEED SENSOR FRONT RH (w/ ABS)**
    HINT:
    The installation procedure for the RH side is the same as that for the LH side.
18. **INSTALL FRONT AXLE HUB LH NUT (See page DS-15)**
19. **INSTALL FRONT AXLE HUB RH NUT**
    HINT:
    The installation procedure for the RH side is the same as that for the LH side.
20. **INSTALL STARTER ASSEMBLY (See page ST-17)**

21. CONNECT CONNECTOR

(a) Connect the back-up light switch connector.

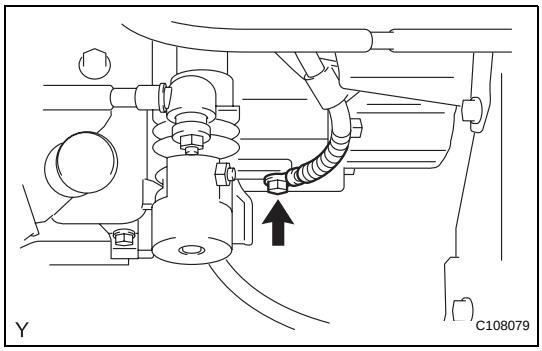

22. CONNECT WIRE HARNESS

(a) Connect the wire harness with the bolt.
Torque: 26 N*m (260 kgf*cm, 19 ft.*lbf)

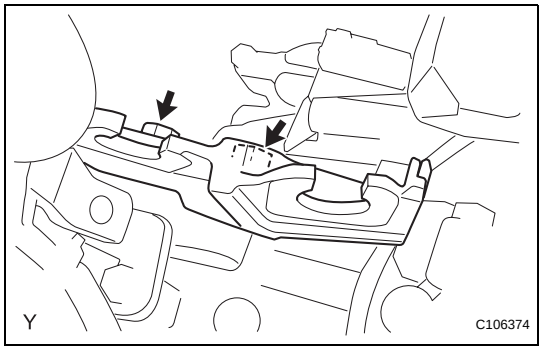

23. INSTALL CONTROL CABLE BRACKET

(a) Install the control cable bracket with the 2 bolts.
Torque: 25 N*m (255 kgf*cm, 18 ft.*lbf)

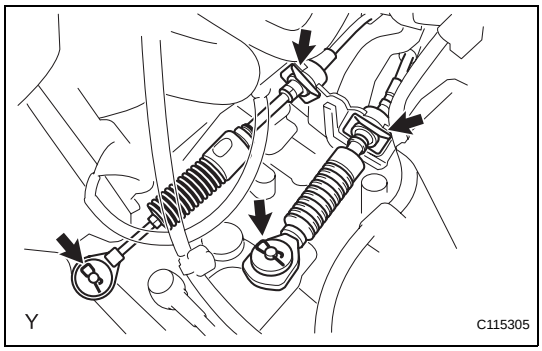

24. CONNECT TRANSMISSION CONTROL CABLE ASSEMBLY

(a) Connect the 2 cable ends and install the 2 washers and the 2 clips.
(b) Install 2 new clips onto the control cable bracket.

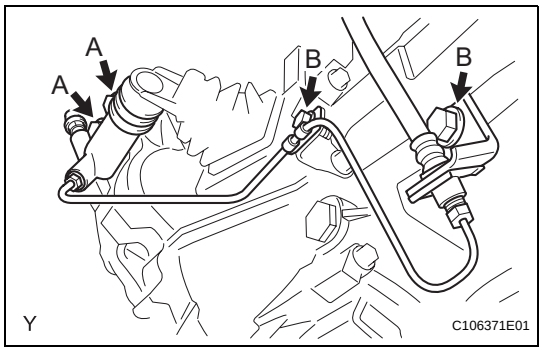

25. INSTALL CLUTCH RELEASE CYLINDER ASSEMBLY

(a) Install the clutch release cylinder and clutch pipe with the 4 bolts.
Torque: 12 N*m (120 kgf*cm, 8.7 ft.*lbf) for bolt A
12 N*m (122 kgf*cm, 8.9 ft.*lbf) for bolt B

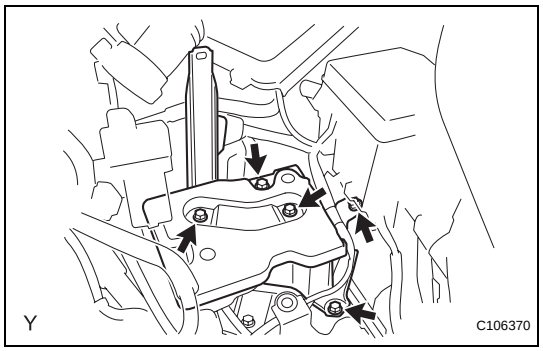

26. INSTALL BATTERY CARRIER
(a) Install the battery carrier with the 5 bolts.
Torque: 17 N*m (175 kgf*cm, 13 ft.*lbf)

27. INSTALL BATTERY TRAY

28. INSTALL BATTERY

29. INSTALL BATTERY CLAMP SUB-ASSEMBLY

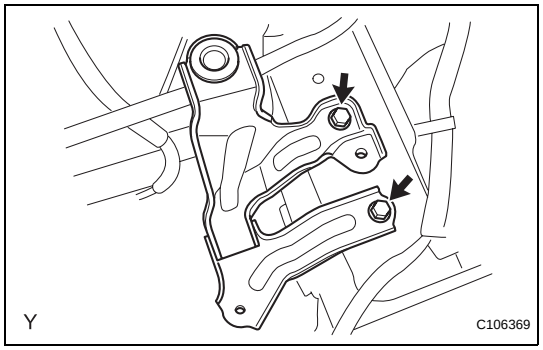

30. INSTALL AIR CLEANER BRACKET
(a) Install the air cleaner bracket with the 2 bolts.
Torque: 19 N*m (194 kgf*cm, 14 ft.*lbf)

31. INSTALL AIR CLEANER ASSEMBLY (See page EM-146)

32. INSTALL CYLINDER HEAD COVER NO.2 (See page IG-10)

33. INSTALL COWL TOP PANEL OUTER (for Hatchback) (See page EM-146)

34. INSTALL COWL TO REGISTER DUCT SUB-ASSEMBLY NO.2 (for Hatchback) (See page EM-147)

35. INSTALL WINDSHIELD WIPER MOTOR AND LINK (for Hatchback) (See page WW-21)

36. INSTALL COWL TOP VENTILATOR LOUVER LH (for Hatchback) (See page WW-21)

37. INSTALL COWL TOP VENTILATOR LOUVER SUB-ASSEMBLY (for Hatchback) (See page WW-21)

38. INSTALL COWL TOP PANEL OUTER (for Sedan) (See page EM-147)

39. INSTALL FRONT AIR SHUTTER SEAL (for Sedan) (See page EM-148)

40. INSTALL WINDSHIELD WIPER MOTOR AND LINK (for Sedan) (See page WW-12)

41. INSTALL COWL TOP VENTILATOR LOUVER SUB-ASSEMBLY (for Sedan) (See page WW-12)

42. INSTALL COWL SIDE VENTILATOR SUB-ASSEMBLY RH (for Sedan) (See page WW-13)

43. INSTALL COWL SIDE VENTILATOR SUB-ASSEMBLY LH (for Sedan) (See page WW-13)

44. INSTALL HOOD TO COWL TOP SEAL (See page WW-22)

45. INSTALL FRONT WIPER ARM AND BLADE ASSEMBLY LH (See page WW-22)

46. INSTALL FRONT WIPER ARM AND BLADE ASSEMBLY RH (See page WW-23)

47. INSTALL HOOD SUB-ASSEMBLY

48. **INSPECT HOOD SUB-ASSEMBLY (See page ED-3)**
49. **ADJUST HOOD SUB-ASSEMBLY (See page ED-4)**
50. **ADD TRANSAXLE OIL**
51. **INSPECT AND ADJUST TRANSAXLE OIL (See page MX-2)**
52. **INSTALL ENGINE UNDER COVER RH**
53. **INSTALL ENGINE UNDER COVER LH**
54. **INSTALL FRONT WHEELS**
55. **INSTALL STEERING SLIDE YOKE SUB-ASSEMBLY (See page PS-79)**
56. **INSTALL COLUMN HOLE COVER SILENCER SHEET (See page PS-79)**
57. **CONNECT CABLE TO NEGATIVE BATTERY TERMINAL**
    Torque: 5.4 N*m (55 kgf*cm, 48 in.*lbf)
58. **INSPECT ABS SPEED SENSOR SIGNAL (w/ ABS)** (See page BC-14)
59. **INSPECT AND ADJUST FRONT WHEEL ALIGNMENT** (See page SP-2)
60. **CHECK FOR EXHAUST GAS LEAKAGE**
61. **CHECK FOR TRANSAXLE OIL LEAKAGE**

MANUAL TRANSAXLE UNIT

COMPONENTS

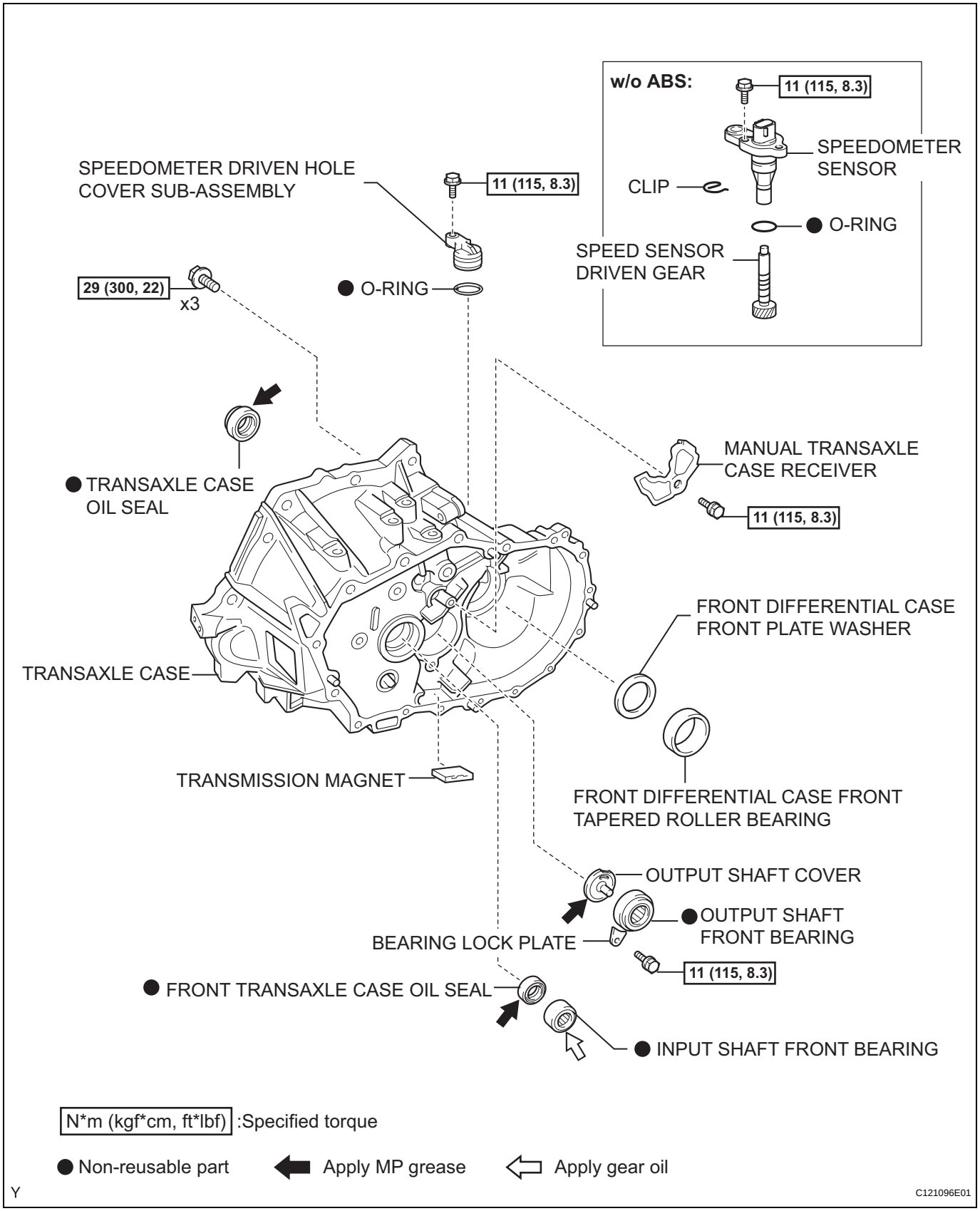

MX

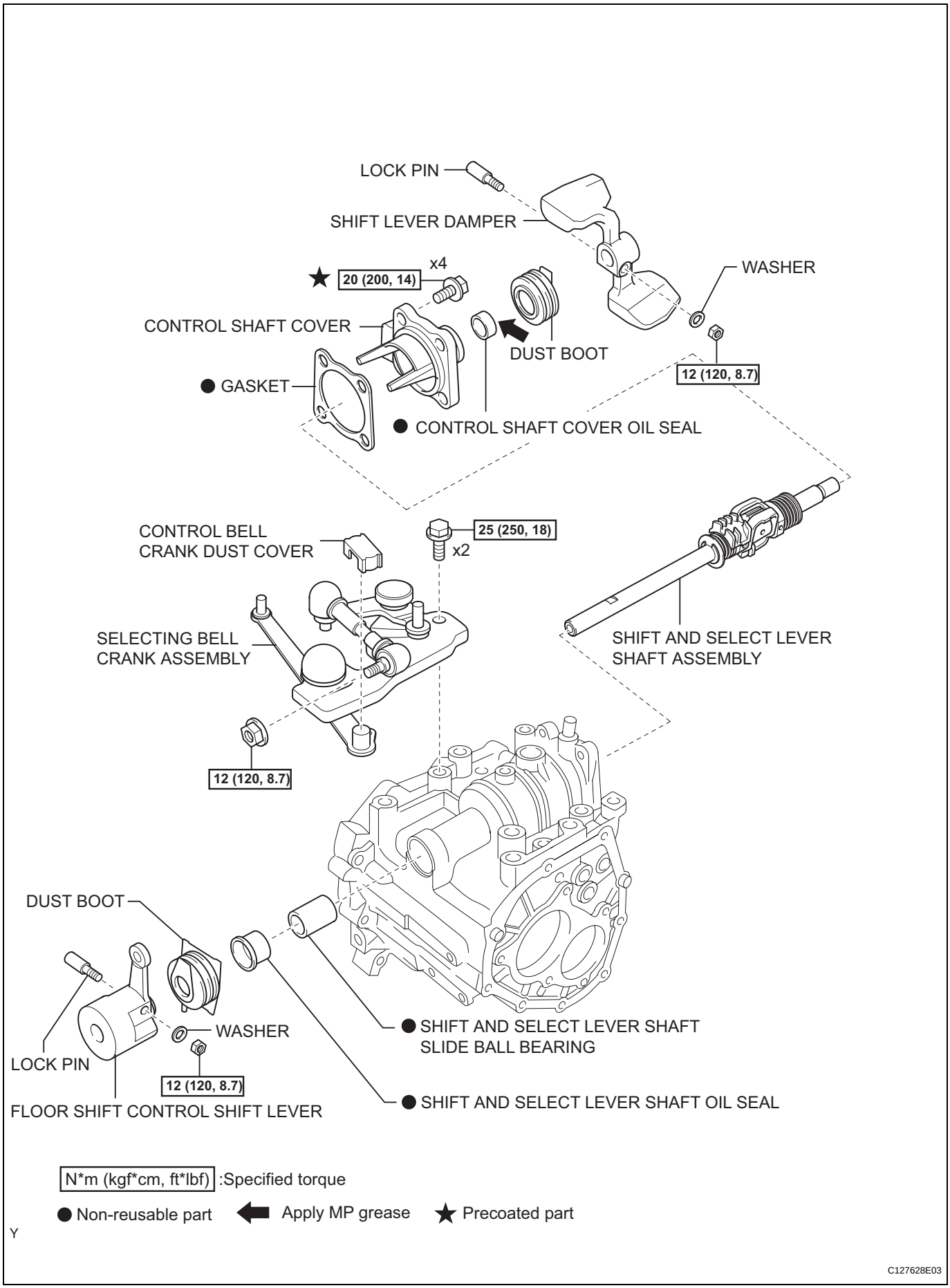
LOCK PIN
SHIFT LEVER DAMPER
WASHER
x4
20 (200, 14)
CONTROL SHAFT COVER
DUST BOOT
12 (120, 8.7)
GASKET
CONTROL SHAFT COVER OIL SEAL
CONTROL BELL CRANK DUST COVER
25 (250, 18)
x2
SELECTING BELL CRANK ASSEMBLY
SHIFT AND SELECT LEVER SHAFT ASSEMBLY
12 (120, 8.7)
DUST BOOT
WASHER
LOCK PIN
12 (120, 8.7)
FLOOR SHIFT CONTROL SHIFT LEVER
SHIFT AND SELECT LEVER SHAFT SLIDE BALL BEARING
SHIFT AND SELECT LEVER SHAFT OIL SEAL
N*m (kgf*cm, ft*lbf) :Specified torque
Non-reusable part
Apply MP grease
Precoated part
Y
C127628E03

MX

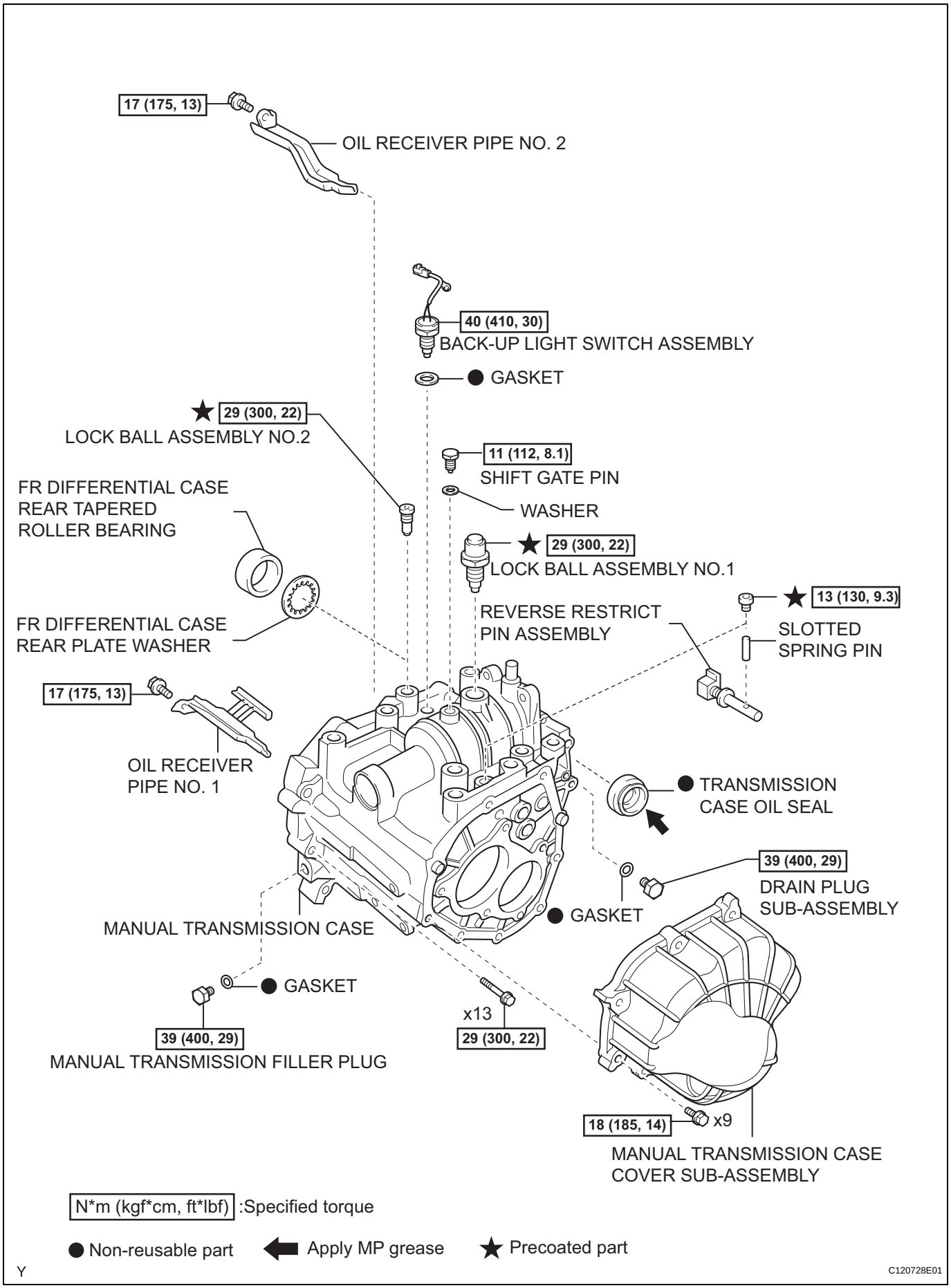
17 (175, 13)
OIL RECEIVER PIPE NO. 2
40 (410, 30)
BACK-UP LIGHT SWITCH ASSEMBLY
GASKET
29 (300, 22)
LOCK BALL ASSEMBLY NO.2
11 (112, 8.1)
SHIFT GATE PIN
WASHER
FR DIFFERENTIAL CASE REAR TAPERED ROLLER BEARING
29 (300, 22)
LOCK BALL ASSEMBLY NO.1
13 (130, 9.3)
REVERSE RESTRICT PIN ASSEMBLY
SLOTTED SPRING PIN
FR DIFFERENTIAL CASE REAR PLATE WASHER
17 (175, 13)
OIL RECEIVER PIPE NO. 1
TRANSMISSION CASE OIL SEAL
39 (400, 29)
DRAIN PLUG SUB-ASSEMBLY
GASKET
MANUAL TRANSMISSION CASE
GASKET
x13
29 (300, 22)
39 (400, 29)
MANUAL TRANSMISSION FILLER PLUG
18 (185, 14)
x9
MANUAL TRANSMISSION CASE COVER SUB-ASSEMBLY
N*m (kgf*cm, ft*lbf) :Specified torque
Non-reusable part
Apply MP grease
Precoated part
Y
C120728E01

MX

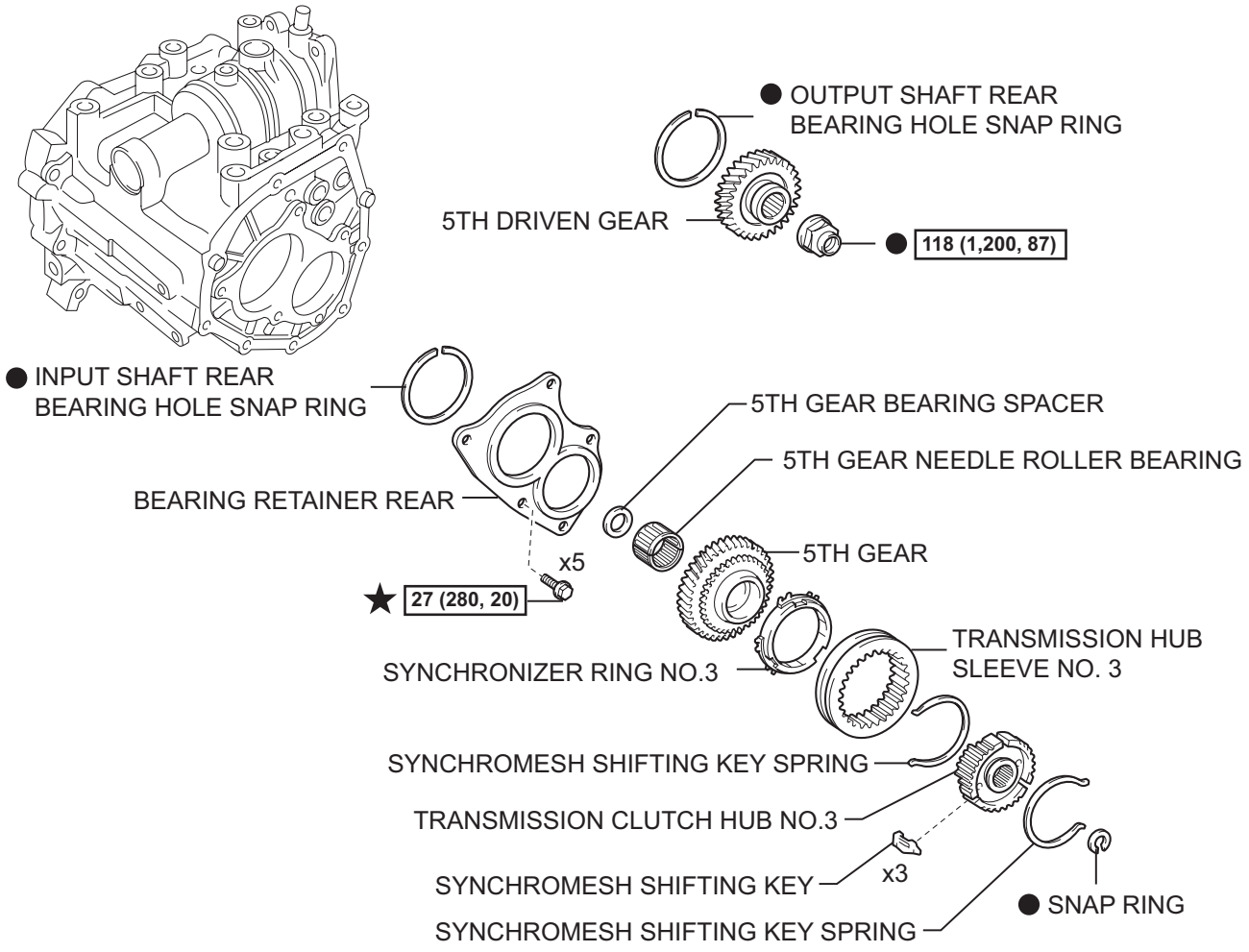

N*m (kgf*cm, ft*lbf) :Specified torque

● Non-reusable part ★ Precoated part

Y

C120727E01

MX

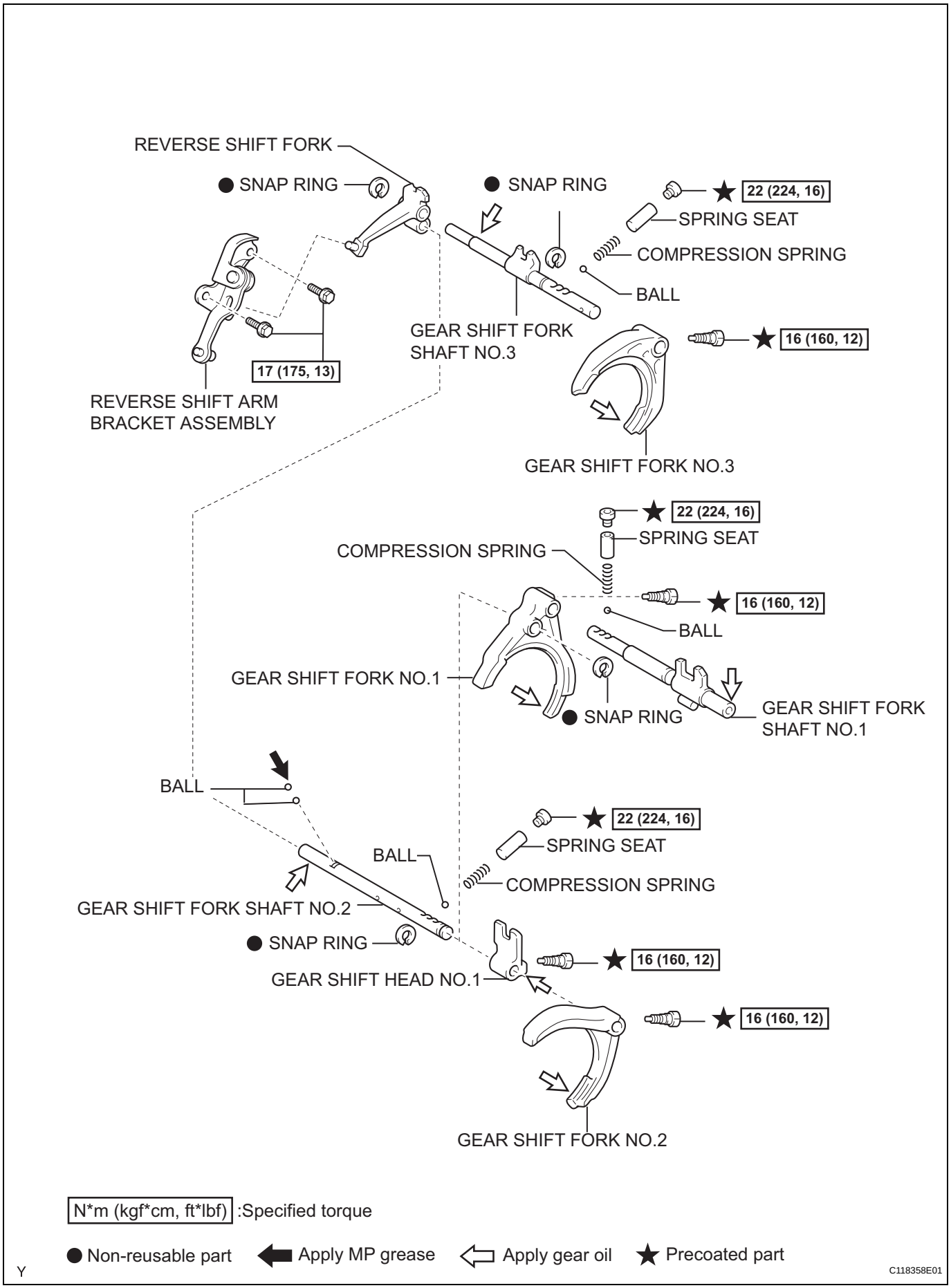
REVERSE SHIFT FORK
● SNAP RING
● SNAP RING
★ 22 (224, 16)
SPRING SEAT
COMPRESSION SPRING
BALL
GEAR SHIFT FORK SHAFT NO.3
★ 16 (160, 12)
17 (175, 13)
REVERSE SHIFT ARM BRACKET ASSEMBLY
GEAR SHIFT FORK NO.3
★ 22 (224, 16)
SPRING SEAT
COMPRESSION SPRING
★ 16 (160, 12)
BALL
GEAR SHIFT FORK NO.1
● SNAP RING
GEAR SHIFT FORK SHAFT NO.1
BALL
★ 22 (224, 16)
SPRING SEAT
BALL
COMPRESSION SPRING
GEAR SHIFT FORK SHAFT NO.2
● SNAP RING
★ 16 (160, 12)
GEAR SHIFT HEAD NO.1
★ 16 (160, 12)
GEAR SHIFT FORK NO.2
N*m (kgf*cm, ft*lbf) :Specified torque
● Non-reusable part
Apply MP grease
Apply gear oil
★ Precoated part
Y
C118358E01

MX

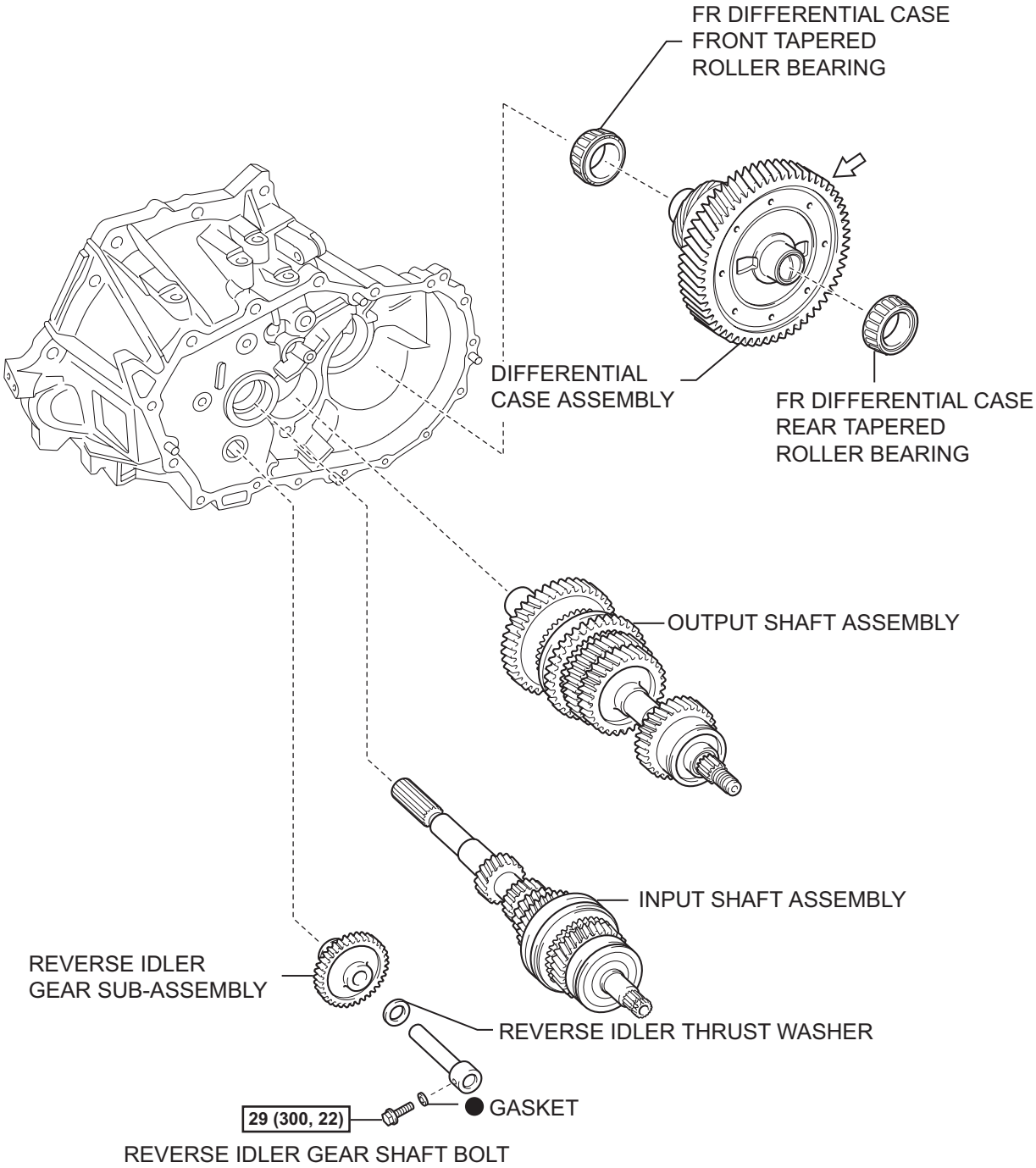

N*m (kgf*cm, ft*lbf) :Specified torque

● Non-reusable part ⇦ Apply gear oil

Y

C120725E01

DISASSEMBLY

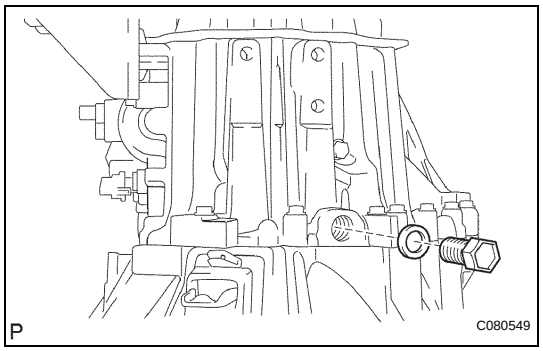

1. REMOVE MANUAL TRANSMISSION FILLER PLUG

(a) Remove the manual transmission filler plug and gasket from the manual transmission case.

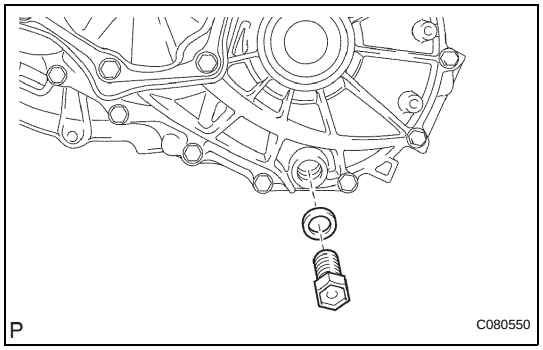

2. REMOVE DRAIN PLUG SUB-ASSEMBLY

(a) Remove the drain plug sub-assembly and gasket from the manual transmission case.

3. REMOVE SPEEDOMETER DRIVEN HOLE COVER SUB-ASSEMBLY

(a) Remove the bolt and speedometer driven hole cover sub-assembly from the transaxle case.

(b) Remove the O-ring from the speedometer driven hole cover sub-assembly.

4. REMOVE SPEEDOMETER SENSOR (w/o ABS)

(a) Remove the bolt and speedometer sensor from the transaxle case.

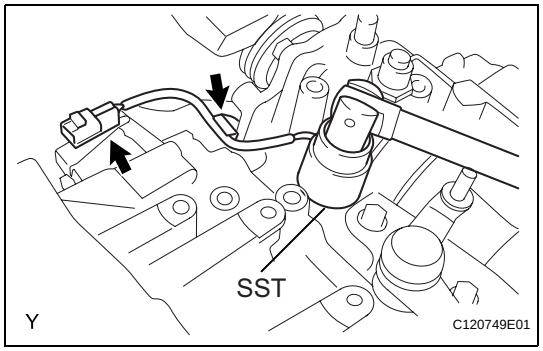

5. REMOVE BACK-UP LIGHT SWITCH ASSEMBLY

(a) Separate the back-up light switch wire harness from the 2 clamps.

(b) Using SST, remove the back-up light switch assembly and gasket from the manual transmission case.

SST 09817-16011

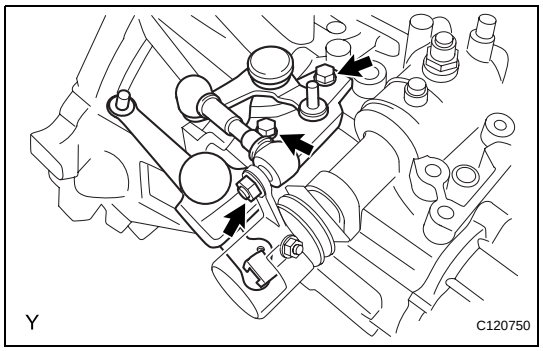

6. REMOVE SELECTING BELL CRANK ASSEMBLY

(a) Remove the 2 bolts and nut and remove the selecting bell crank assembly from the manual transmission case.

(b) Remove the control shift lever bush.

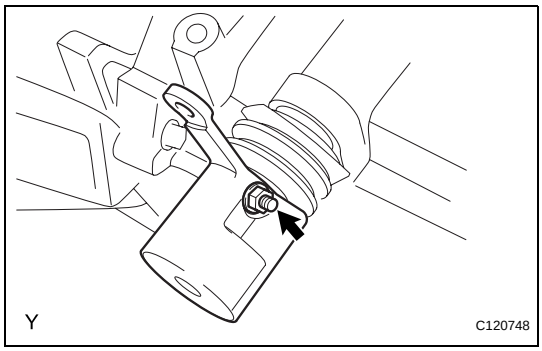

7. REMOVE FLOOR SHIFT CONTROL SHIFT LEVER

(a) Remove the nut and spring washer.

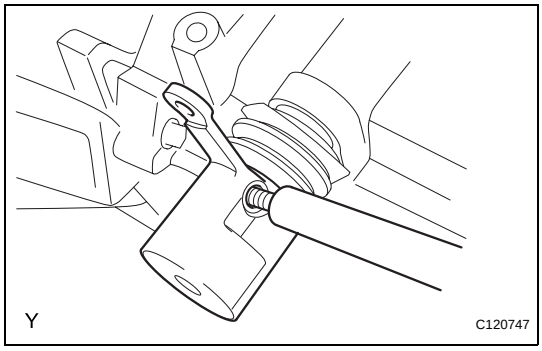

(b) Using a brass bar and a hammer, remove the lock pin.

(c) Remove the floor shift control shift lever.

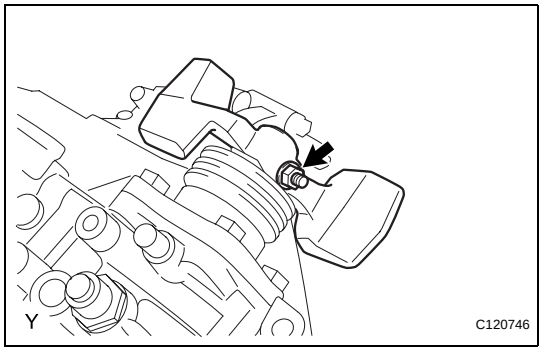

8. REMOVE SHIFT LEVER DAMPER

(a) Remove the nut and spring washer.

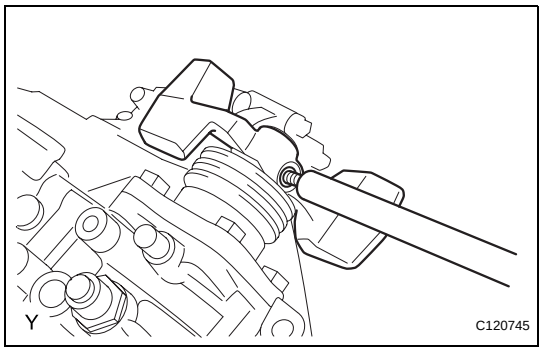

(b) Using a brass bar and a hammer, remove the lock pin.

(c) Remove the shift lever damper.

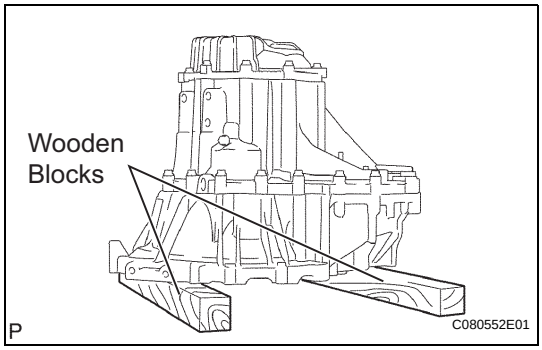

9. FIX MANUAL TRANSAXLE ASSEMBLY

(a) Place the manual transaxle assembly on wooden blocks.

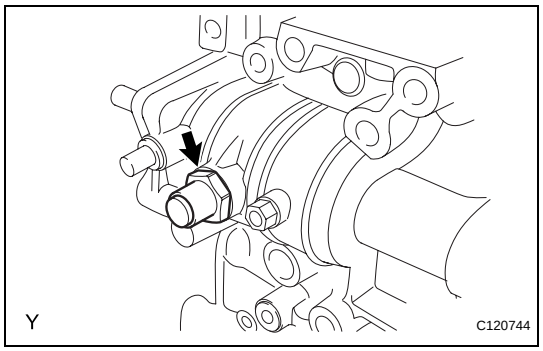

10. REMOVE LOCK BALL ASSEMBLY NO.1

(a) Remove lock ball assembly No. 1 from the manual transmission case.

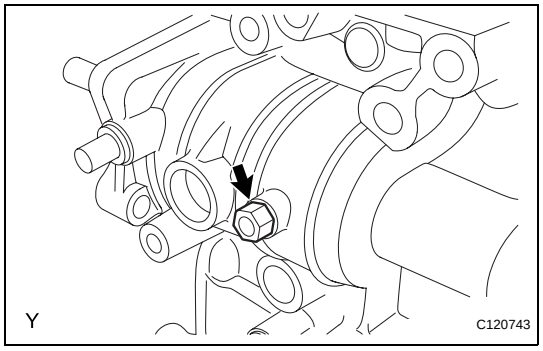

11. REMOVE SHIFT GATE PIN

(a) Remove the shift gate pin and washer from the transmission case.

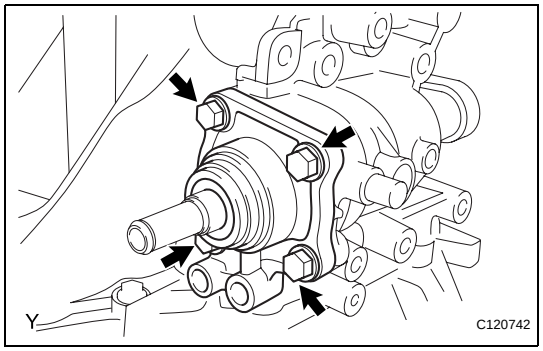

12. REMOVE CONTROL SHAFT COVER

(a) Remove the 4 bolts, control shaft cover and gasket from the manual transmission case.

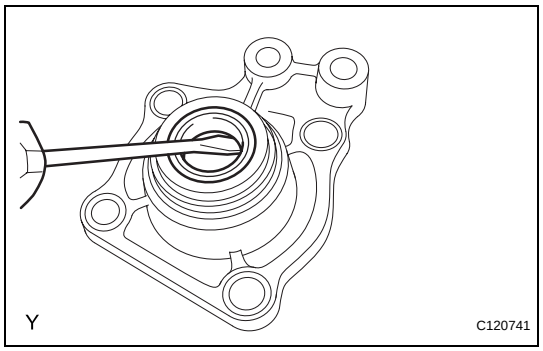

13. REMOVE CONTROL SHAFT COVER OIL SEAL

(a) Using a screwdriver, remove the control shaft cover oil seal from the control shaft cover.

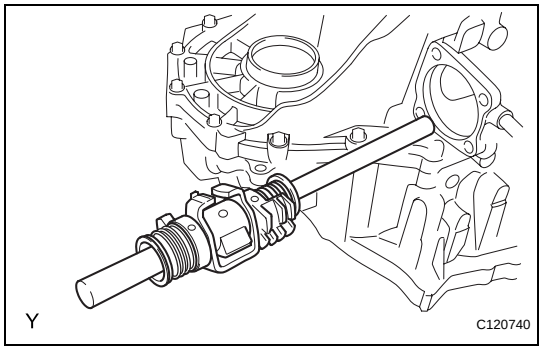

14. REMOVE SHIFT AND SELECT LEVER SHAFT ASSEMBLY

(a) Remove the shift and select lever shaft assembly from the transmission case.

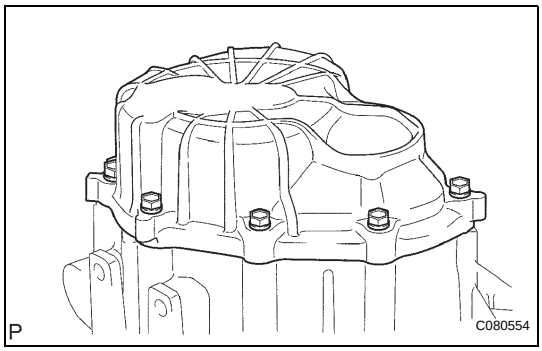

15. REMOVE MANUAL TRANSMISSION CASE COVER SUB-ASSEMBLY

(a) Remove the 9 bolts.

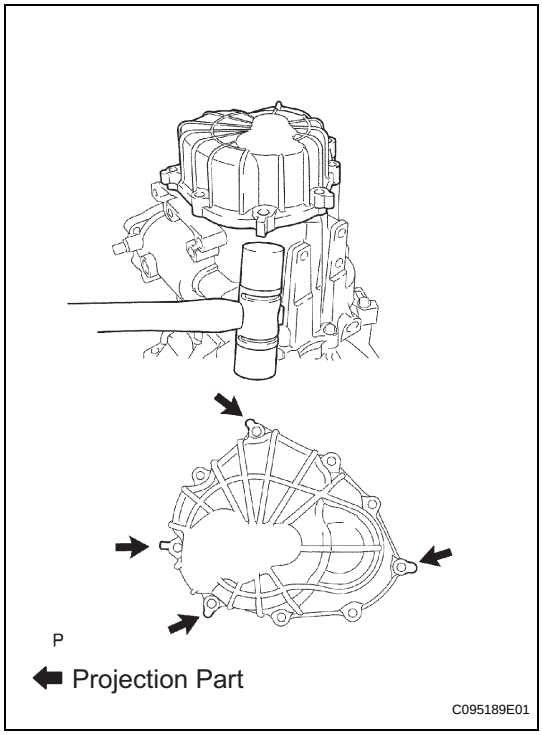

(b) Using a plastic hammer, carefully tap the projection of the manual transmission case cover sub-assembly to remove the manual transmission case cover from the manual transmission case.
NOTICE:
Do not damage the manual transmission case.

MX

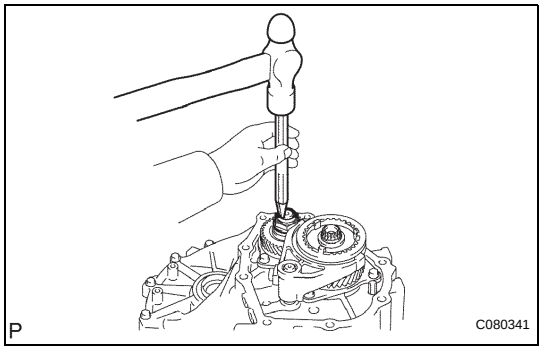

16. REMOVE MANUAL TRANSMISSION OUTPUT SHAFT REAR SET NUT

(a) Using a chisel and a hammer, loosen the staked part of the manual transmission output shaft rear set nut.

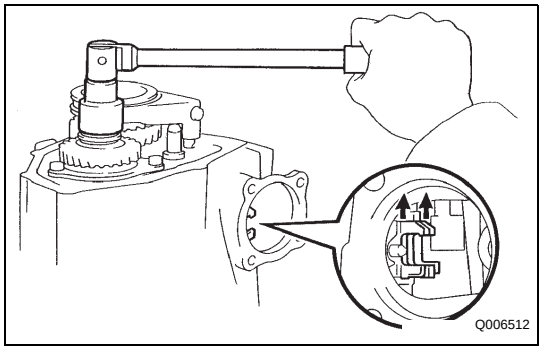

(b) Engage the 2 gears simultaneously to lock the transmission.
(c) Remove the manual transmission output shaft rear set nut.
(d) Disengage the 2 gears.

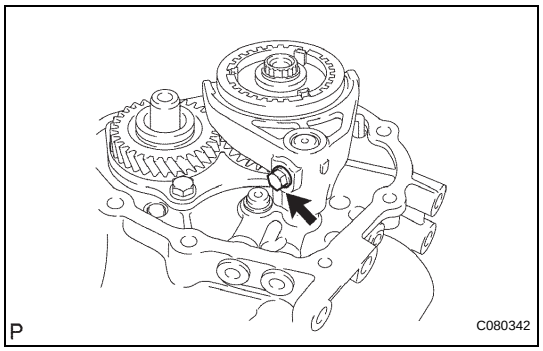

17. REMOVE GEAR SHIFT FORK NO.3

(a) Remove the gear shift fork lock bolt from gear shift fork No. 3.

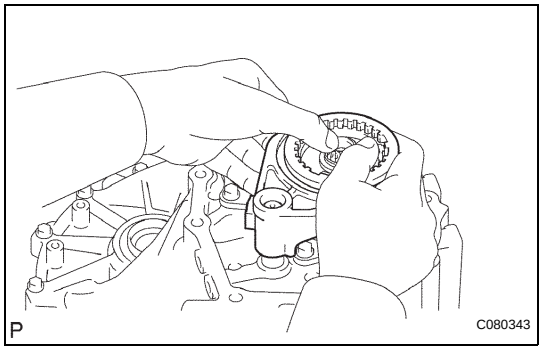

(b) Remove transmission hub sleeve No. 3 with gear shift fork No. 3 from transmission clutch hub No. 3.

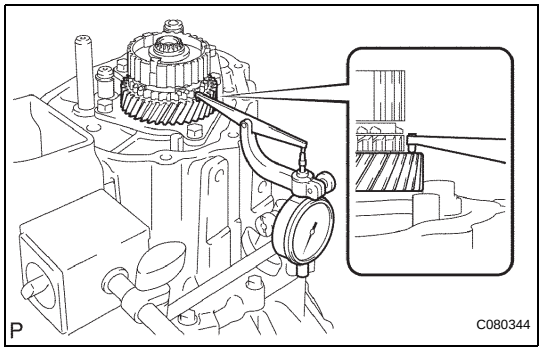

18. INSPECT 5TH GEAR THRUST CLEARANCE

(a) Using a dial indicator, measure the 5th gear thrust clearance.

Standard clearance:
0.10 to 0.55 mm (0.0039 to 0.0217 in.)
Maximum clearance:
0.55 mm (0.0217 in.)

If the clearance exceeds the maximum, replace transmission clutch hub No. 3, the 5th gear or input shaft rear radial ball bearing.

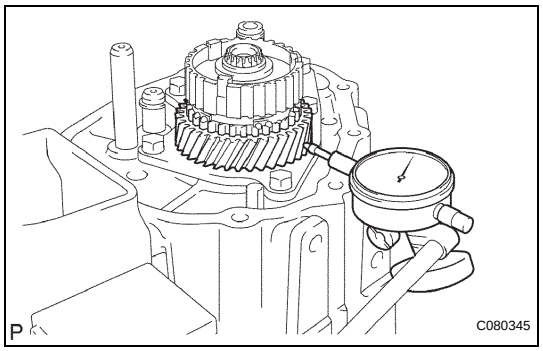

19. INSPECT 5TH GEAR RADIAL CLEARANCE

(a) Using a dial indicator, measure the 5th gear radial clearance.

Standard clearance:
KOYO made:
0.015 to 0.058 mm (0.0006 to 0.0023 in.)
NSK made:
0.015 to 0.056 mm (0.0006 to 0.0022 in.)
Maximum clearance:
KOYO made:
0.058 mm (0.0023 in.)
NSK made:
0.056 mm (0.0022 in.)

If the clearance exceeds the maximum, replace the 5th gear, 5th gear needle roller bearing or input shaft.

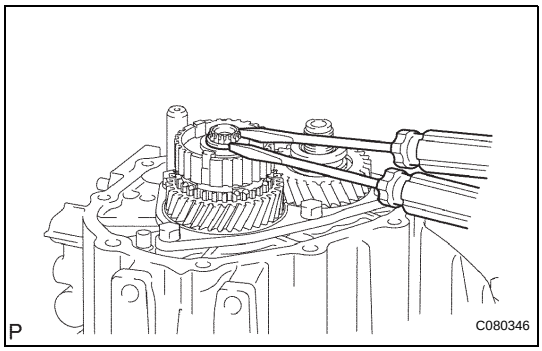

20. REMOVE TRANSMISSION CLUTCH HUB NO.3

(a) Using 2 screwdrivers and a hammer, tap out the snap ring.
HINT:
Use a shop rag or piece of cloth to keep the snap ring from flying off.

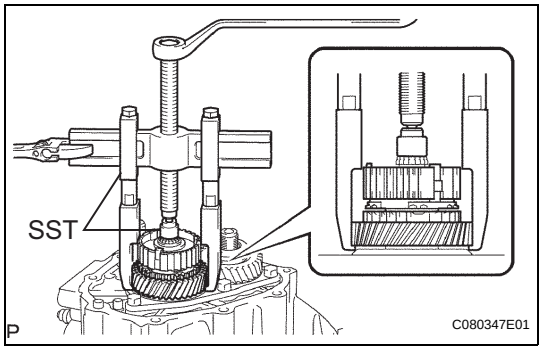

(b) Using SST, remove transmission clutch hub No. 3, the 5th gear and synchronizer ring No. 3 from the input shaft.
SST 09950-40011 (09951-04020, 09952-04010, 09953-04030, 09954-04010, 09955-04011), 09950-60010 (09951-00180)

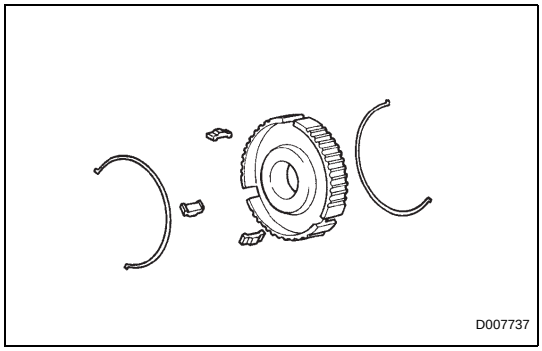

(c) Remove the 3 synchromesh shifting keys and 2 synchromesh shifting key springs from transmission clutch hub No. 3.

MX

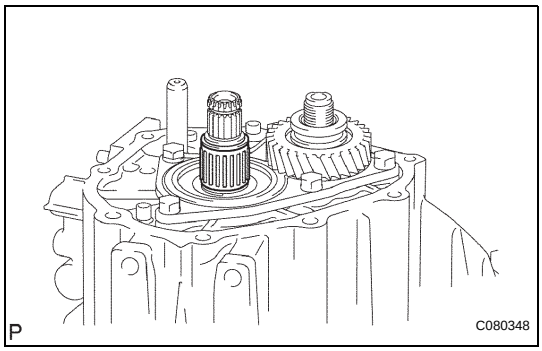

21. REMOVE 5TH GEAR NEEDLE ROLLER BEARING

(a) Remove the 5th gear needle roller bearing and 5th gear bearing spacer from the input shaft.

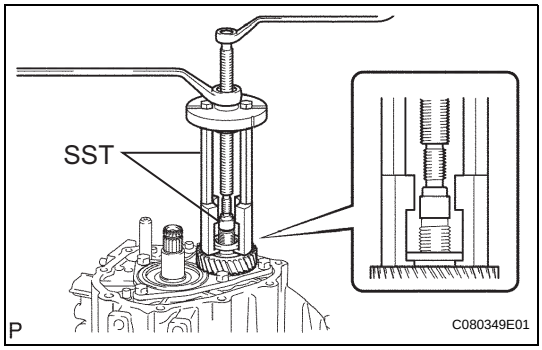

22. REMOVE 5TH DRIVEN GEAR

(a) Using SST, remove the 5th driven gear from the output shaft.
SST 09950-30012 (09951-03010, 09953-03010, 09954-03010, 09955-03021), 09950-60010 (09951-00180)

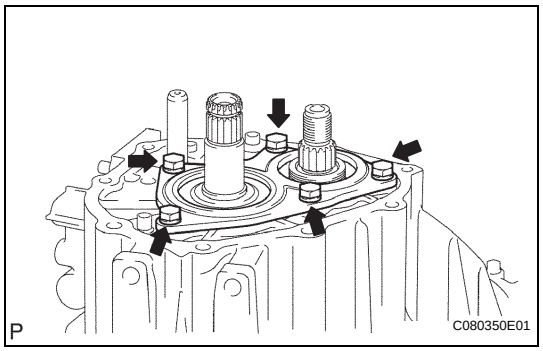

23. REMOVE BEARING RETAINER REAR

(a) Remove the 5 bolts and bearing retainer rear from the manual transmission case.

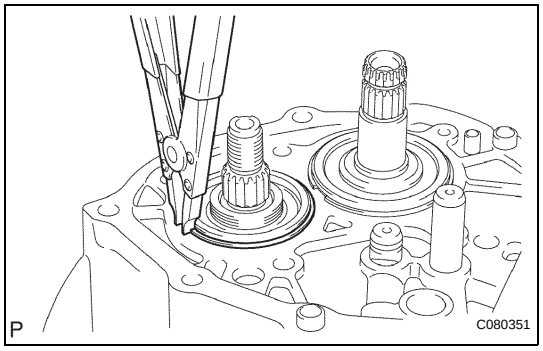

24. REMOVE OUTPUT SHAFT REAR BEARING HOLE SNAP RING

(a) Using a snap ring expander, remove the output shaft rear bearing hole snap ring from the output shaft.

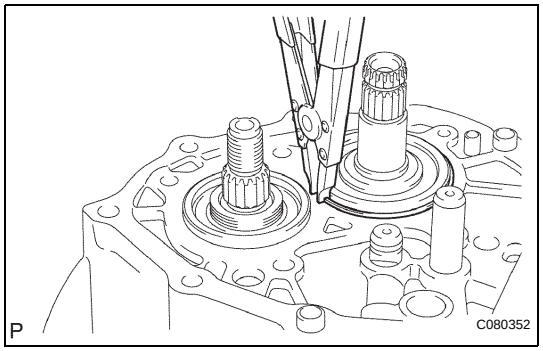

25. REMOVE INPUT SHAFT REAR BEARING HOLE SNAP RING

(a) Using a snap ring expander, remove the input shaft rear bearing hole snap ring from the input shaft.

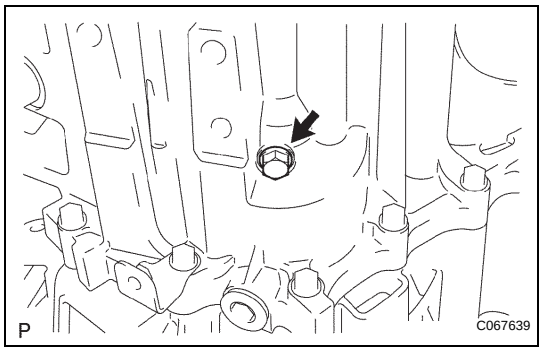

26. REMOVE REVERSE IDLER GEAR SHAFT BOLT

(a) Remove the reverse idler gear shaft bolt and reverse idler gear shaft gasket from the manual transmission case.

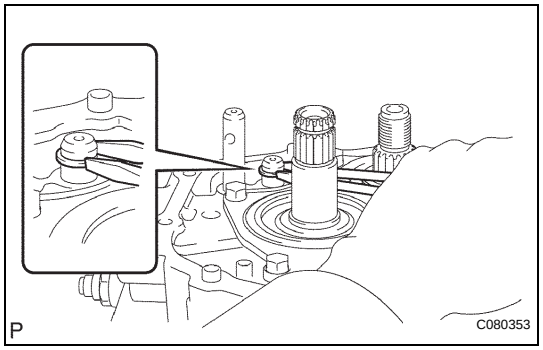

27. REMOVE SHIFT FORK SHAFT SHAFT SNAP RING

(a) Using 2 screwdrivers and a hammer, tap out the snap ring from gear shift fork shaft No. 2.
HINT:
Use a shop rag or piece of cloth to keep the snap ring from flying off.

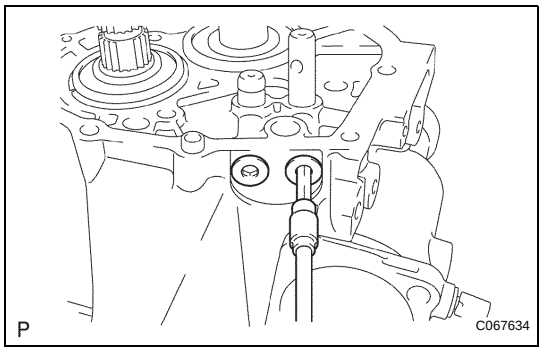

28. REMOVE SHIFT DETENT BALL

(a) Using a hexagon wrench, remove the 2 shift detent ball plugs from the manual transmission case.

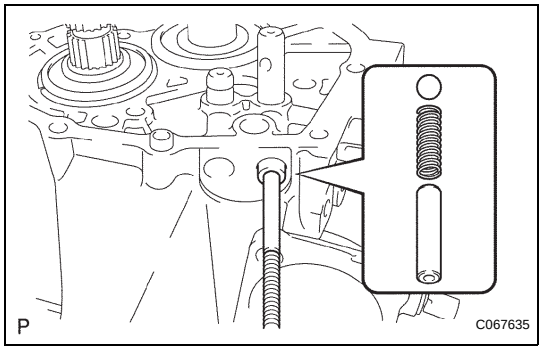

(b) Using a magnetic finger, remove the 2 shift detent ball spring seats No. 1, 2 shift detent ball springs and 2 shift detent balls from the manual transmission case.

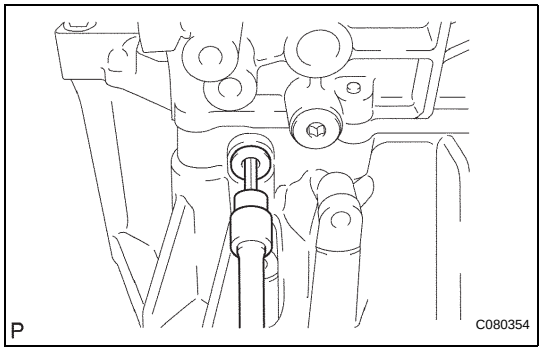

(c) Using a hexagon wrench, remove the shift detent ball plug from the front transaxle case.

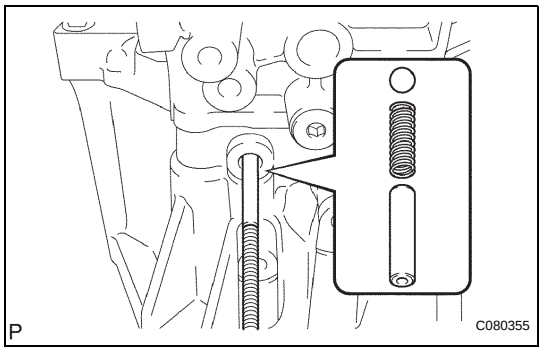

(d) Using a magnetic finger, remove the seat, spring and ball from the front transaxle case.

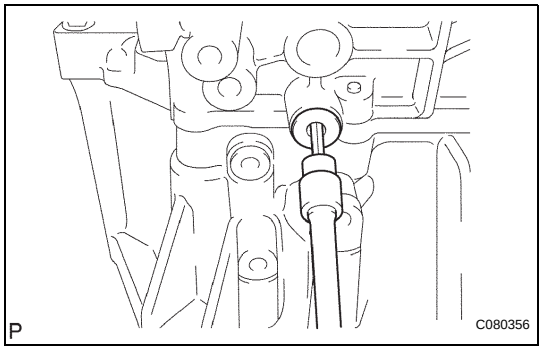

29. REMOVE LOCK BALL ASSEMBLY NO.2

(a) Using a hexagon wrench, remove lock ball assembly No. 2 from the manual transmission case.

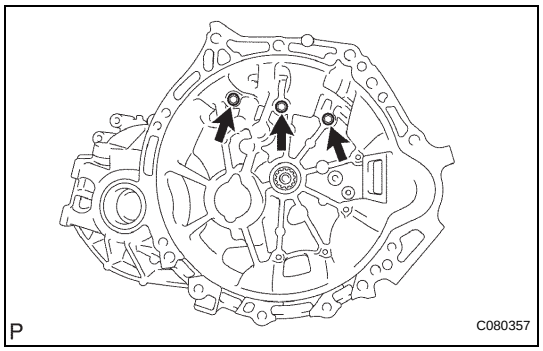

30. REMOVE MANUAL TRANSMISSION CASE

(a) Remove the 3 bolts from the front transaxle case.

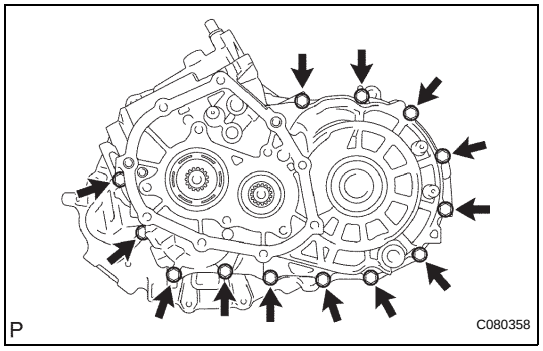

(b) Remove the 13 bolts from the manual transmission case.

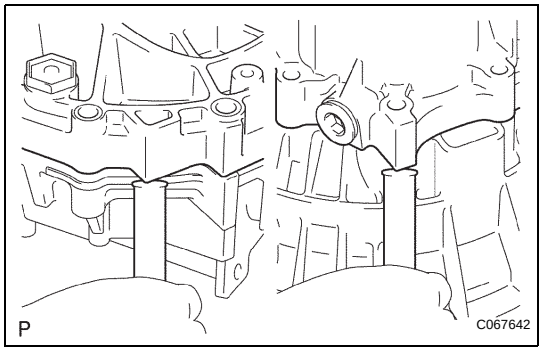

(c) Using a brass bar and a hammer, carefully tap the projections of the manual transmission case to remove the transmission case from the transaxle case.

NOTICE:
Do not damage the manual transmission case and transaxle case.

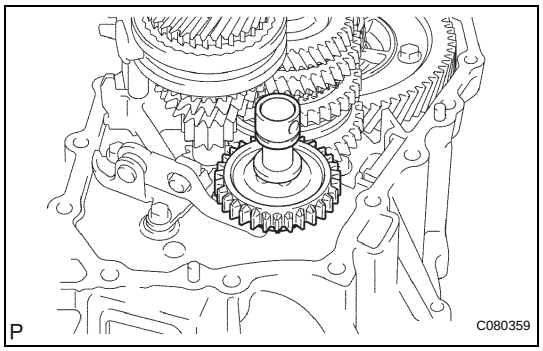

31. REMOVE REVERSE IDLER GEAR SUB-ASSEMBLY

(a) Remove the reverse idler gear sub-assembly, thrust washer and reverse idler gear shaft from the front transaxle case.

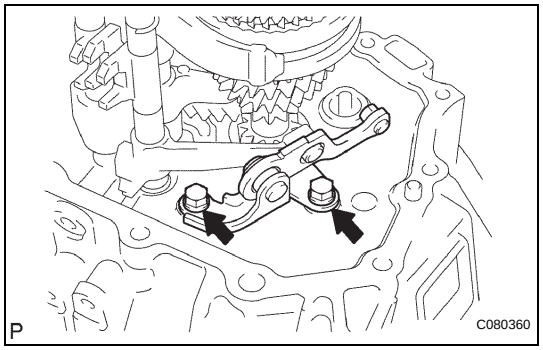

32. REMOVE REVERSE SHIFT ARM BRACKET ASSEMBLY

(a) Remove the 2 bolts and reverse shift arm bracket assembly from the front transaxle case.

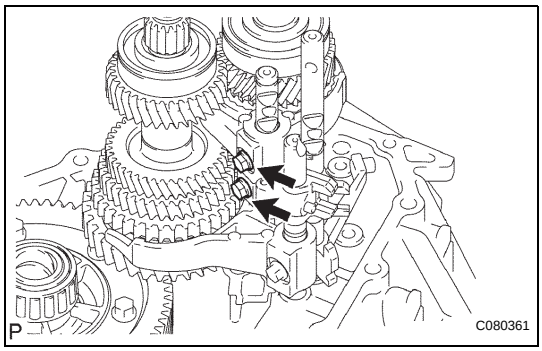

33. REMOVE GEAR SHIFT FORK SHAFT NO.2

(a) Remove the 2 bolts from gear shift fork No. 2 and gear shift head No. 1.

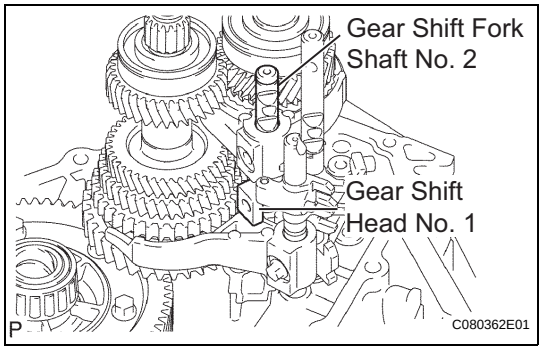

(b) Remove gear shift fork shaft No. 2 and gear shift head No. 1 from the front transaxle case.

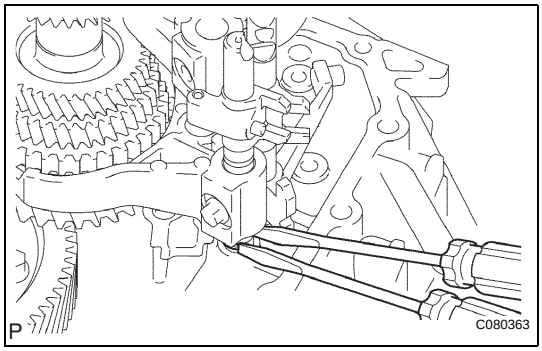

34. REMOVE GEAR SHIFT FORK SHAFT NO.1

(a) Using 2 screwdrivers and a hammer, tap out the snap ring.
HINT:
Use a shop rag or piece of cloth to keep the snap ring from flying off.

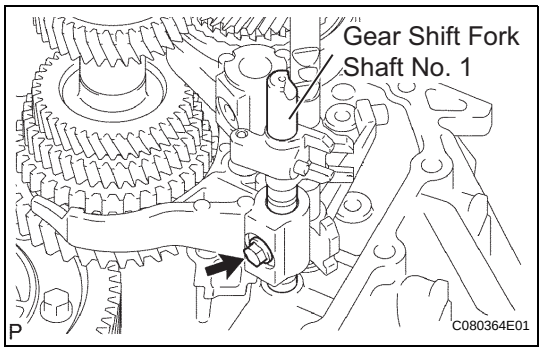

(b) Remove the shift fork set bolt and gear shift fork shaft No. 1 from gear shift fork No. 1.

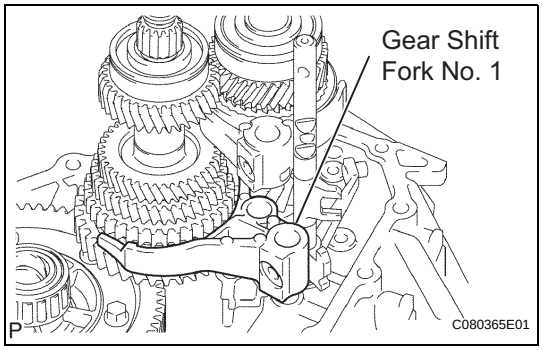

(c) Remove gear shift fork No. 1.

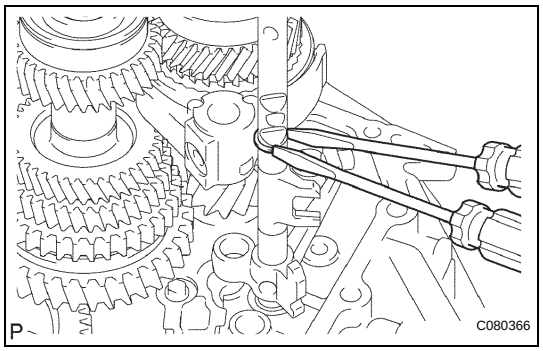

35. REMOVE GEAR SHIFT FORK SHAFT NO.3

(a) Using 2 screwdrivers and a hammer, tap out the snap ring from gear shift fork shaft No. 3.
HINT:
Use a shop rag or piece of cloth to keep the snap ring from flying off.

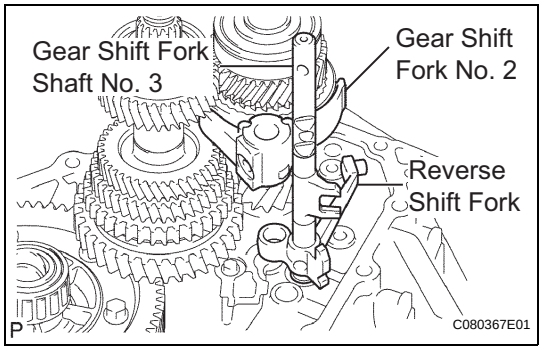

(b) Remove shift fork shaft No. 3 together with the reverse shift fork and gear shift fork No. 2 from the manual transaxle case.

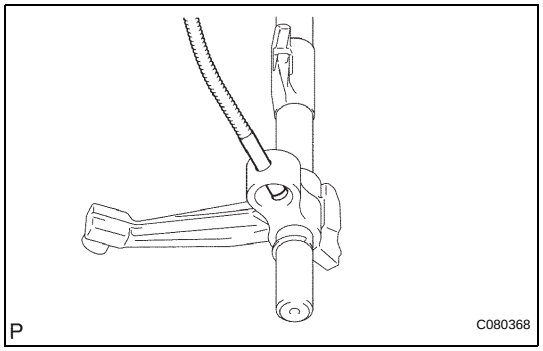

(c) Using a magnetic finger, remove the 2 reverse shift fork balls from the reverse shift fork.

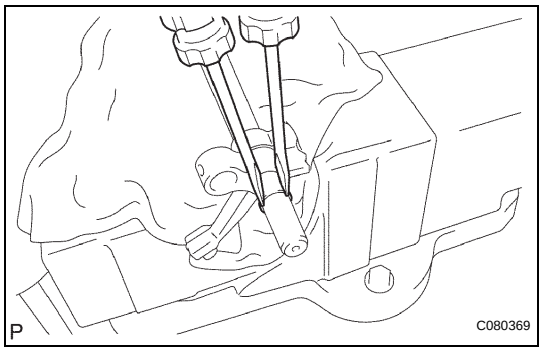

(d) Using 2 screwdrivers and a hammer, tap the snap ring out of shift fork shaft No. 3.
HINT:
Use a shop rag or piece of cloth to keep the snap ring from flying off.

(e) Remove the reverse shift fork from gear shift fork shaft No. 3.

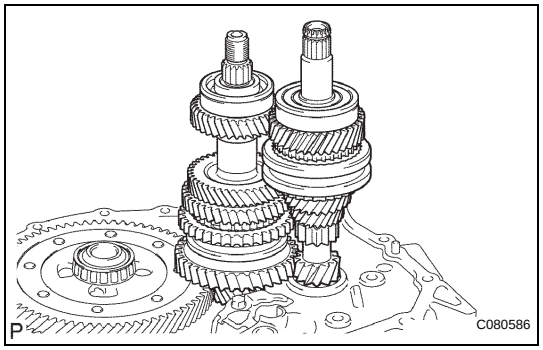

36. REMOVE INPUT SHAFT ASSEMBLY

(a) Remove the input shaft assembly and output shaft assembly from the front transaxle case.

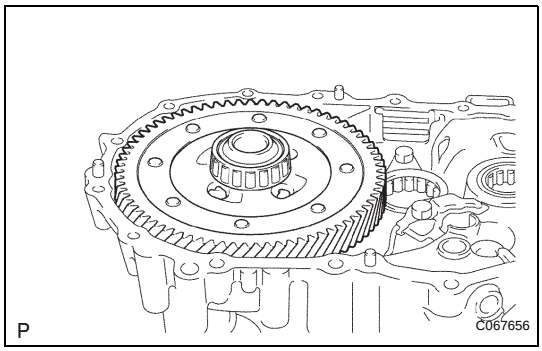

37. REMOVE DIFFERENTIAL CASE ASSEMBLY

(a) Remove the differential case assembly from the front transaxle case.

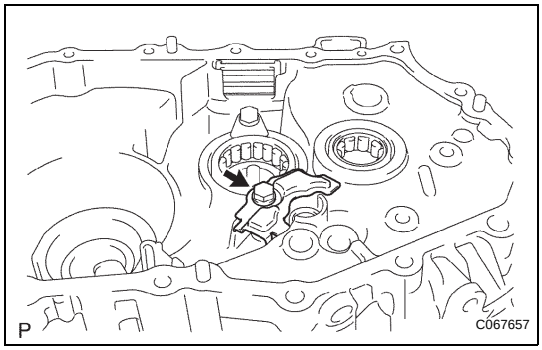

38. REMOVE MANUAL TRANSAXLE CASE RECEIVER

(a) Remove the bolt and manual transaxle case receiver from the front transaxle case.

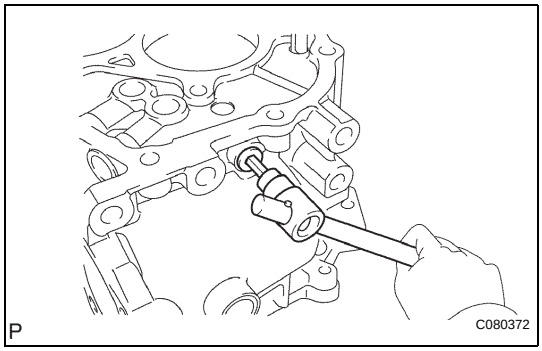

39. REMOVE REVERSE RESTRICT PIN ASSEMBLY

(a) Using a hexagon wrench, remove the reverse restrict pin plug from the manual transmission case.

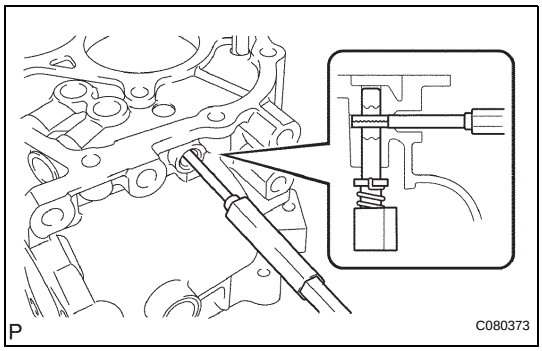

(b) Using a pin punch (ϕ5 mm) and a hammer, drive out the slotted spring pin and remove the reverse restrict pin assembly from the manual transmission case.

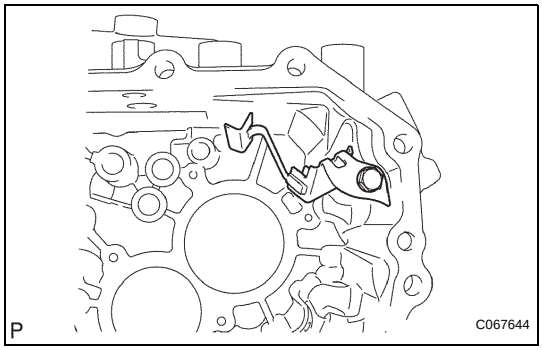

40. REMOVE OIL RECEIVER PIPE NO. 1

(a) Remove the bolt and oil receiver pipe No. 1 from the manual transmission case.

NOTICE:

Do not damage oil receiver pipe No. 1.

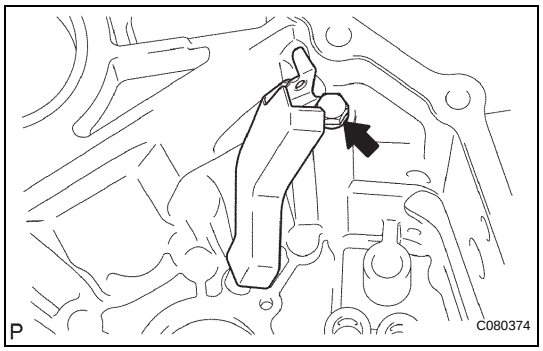

41. REMOVE OIL RECEIVER PIPE NO. 2

(a) Remove the bolt and oil receiver pipe No. 2 from the manual transmission case.
NOTICE:
Do not damage oil receiver pipe No. 2.

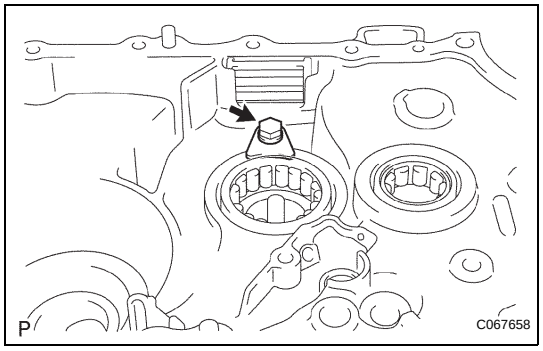

42. REMOVE BEARING LOCK PLATE

(a) Remove the bolt and bearing lock plate from the front transaxle case.

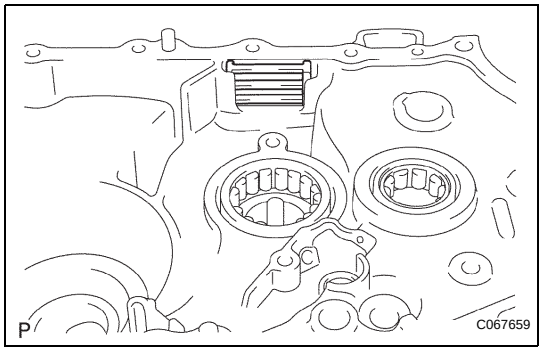

43. REMOVE TRANSMISSION MAGNET

(a) Remove the transmission magnet from the front transaxle case.

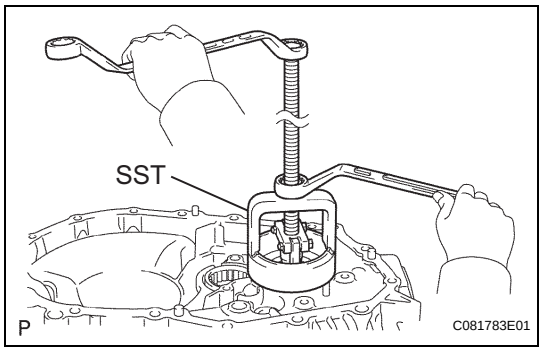

44. REMOVE INPUT SHAFT FRONT BEARING

(a) Using SST, remove the input shaft front bearing from the front transaxle case.
SST 09612-65014 (09612-01050, 09612-01060)

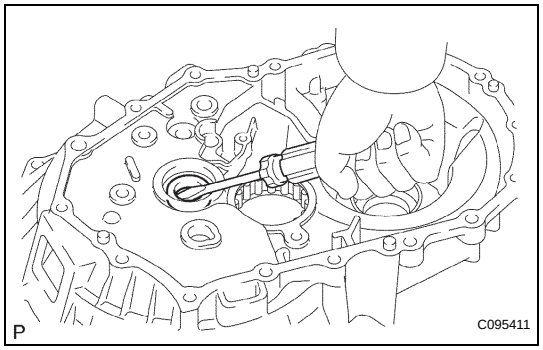

45. REMOVE FRONT TRANSAXLE CASE OIL SEAL

(a) Using a screwdriver, remove the front transaxle case oil seal from the transaxle case.

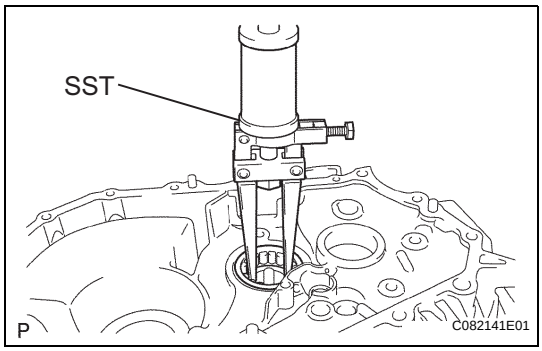

46. REMOVE OUTPUT SHAFT FRONT BEARING

(a) Using SST, remove the output shaft front bearing from the front transaxle case.
SST 09308-00010
NOTICE:
Do not apply excessive force to the front transaxle case when installing it.

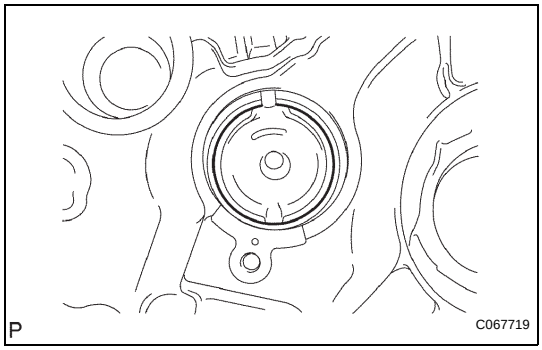

47. REMOVE OUTPUT SHAFT COVER

(a) Remove the output shaft cover from the front transaxle case.

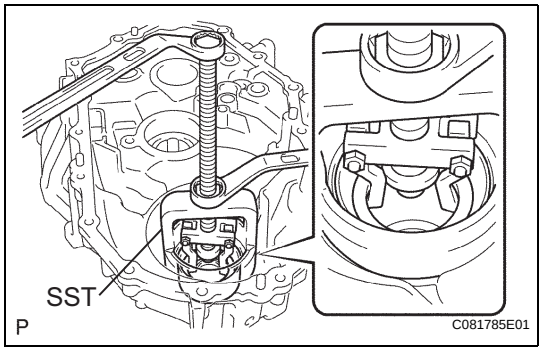

48. REMOVE FR DIFFERENTIAL CASE FRONT TAPERED ROLLER BEARING

(a) Using SST, remove the front differential case front tapered roller bearing (outer race) and plate washer from the front transaxle case.
SST 09612-65014 (09612-01040, 09612-01050)

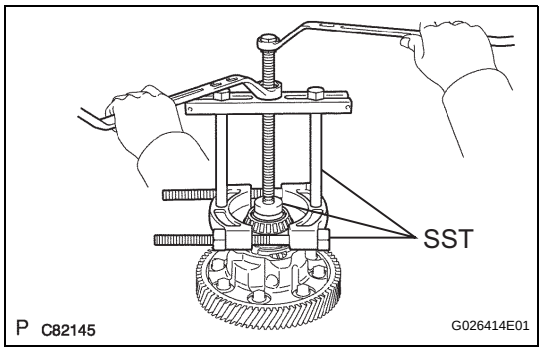

(b) Using SST, remove the front differential case front tapered roller bearing (inner race) from the differential case assembly.
SST 09950-00020, 09950-00030, 09950-40011 (09957-04010), 09950-60010 (09951-00360)
NOTICE:
Do not damage the bearing.

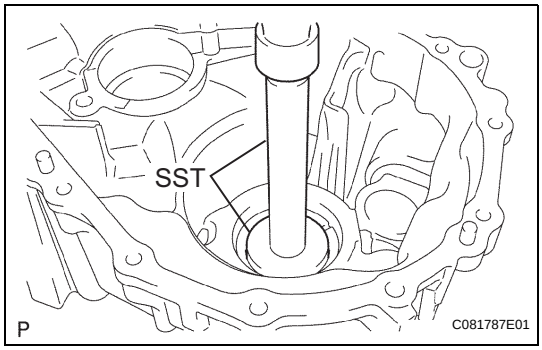

49. REMOVE TRANSAXLE CASE OIL SEAL

(a) Using SST and a hammer, remove the transaxle case oil seal from the front transaxle case.
SST 09950-60010 (09951-00530), 09950-70010 (09951-07150)

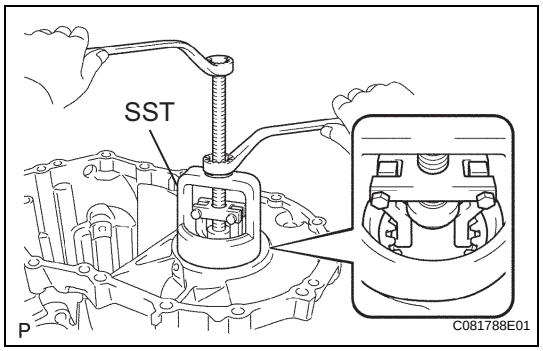

50. REMOVE FR DIFFERENTIAL CASE REAR TAPERED ROLLER BEARING

(a) Using SST, remove the front differential case rear tapered roller bearing (outer race) and plate washer from the transmission case.
SST 09612-65014 (09612-01040, 09612-01050)

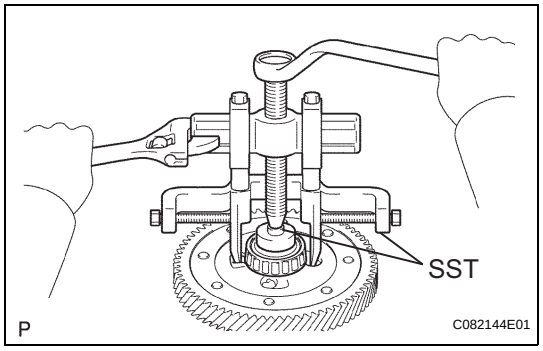

(b) Using SST, remove the front differential case rear tapered roller bearing (inner race) from the front differential case.
SST 09950-40011 (09951-04010, 09952-04010, 09953-04020, 09954-04010, 09955-04061, 09957-04010, 09958-04011), 09950-60010 (09951-00360)
NOTICE:
Do not damage the bearing.

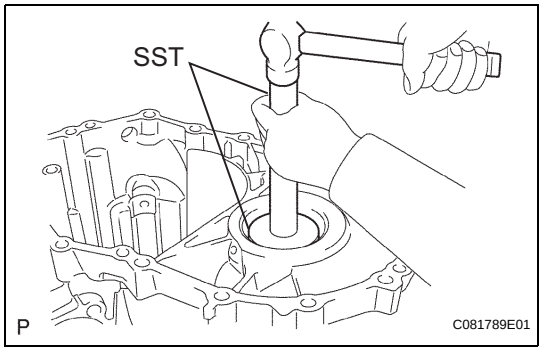

51. REMOVE TRANSMISSION CASE OIL SEAL

(a) Using SST and a hammer, drive out the transmission case oil seal from the manual transmission case.
SST 09950-60010 (09951-00530), 09950-70010 (09951-07150)

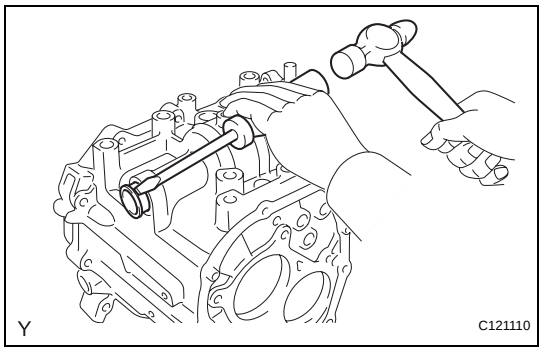

52. REMOVE SHIFT AND SELECT LEVER SHAFT OIL SEAL

(a) Using a screwdriver and hammer, remove the shift and select lever shaft oil seal.

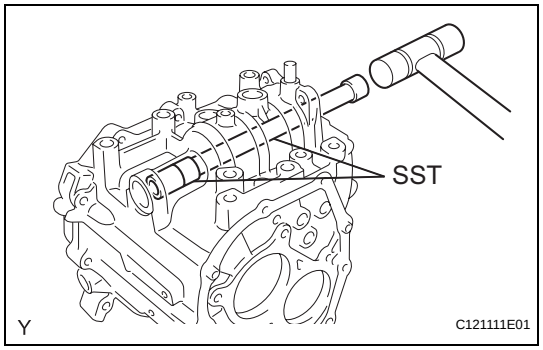

53. REMOVE SHIFT AND SELECT LEVER SHAFT SLIDE BALL BEARING

(a) Using SST and a hammer, remove the shift and select lever shaft slide ball bearing.
SST 09950-60010 (09951-00220), 09950-70010 (09951-07200)

INSPECTION

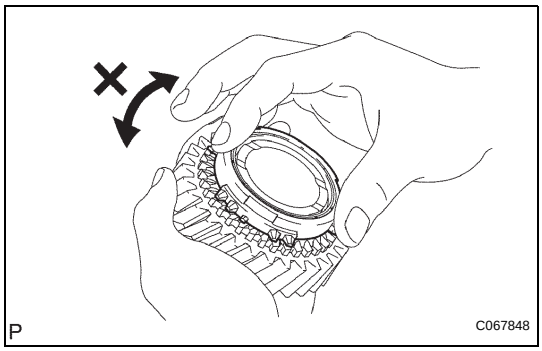

1. INSPECT SYNCHRONIZER RING NO.3

(a) Check for wear and damage.
(b) Coat the 5th gear cone with gear oil.
(c) Turn the synchronizer ring in one direction while pushing it against the 5th gear cone.
(d) Check that the ring locks.
If the synchronizer ring does not lock, replace the synchronizer ring.

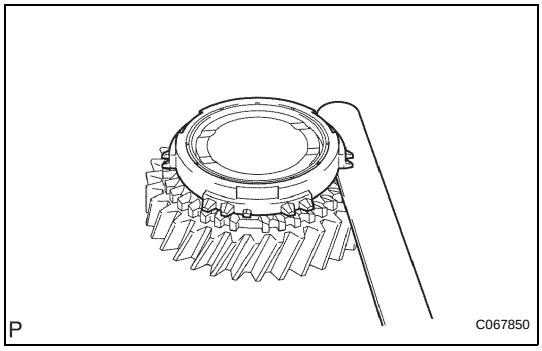

(e) Using a feeler gauge, measure the clearance between the synchronizer ring back and the gear spline end.
Minimum clearance:
0.75 mm (0.0295 in.)
If the clearance is less than the minimum, replace the synchronizer ring.

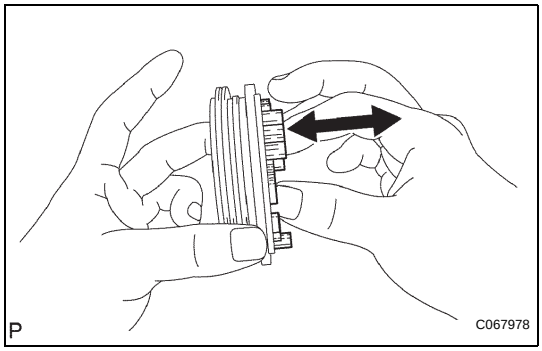

2. INSPECT TRANSMISSION HUB SLEEVE NO.3

(a) Check the sliding condition between transmission hub sleeve No. 3 and transmission clutch hub No. 3.
(b) Check that the edges of the transmission hub sleeve No. 3 spline gear are not worn down.

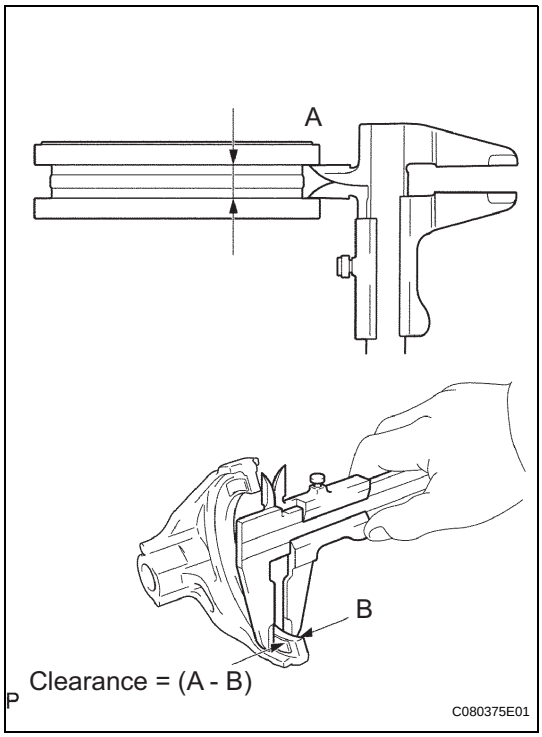

(c) Using vernier calipers, measure the width of the transmission hub sleeve No. 3 groove (A) and the thickness of the claw part on the gear shift fork No. 3 (B), and calculate the clearance.
Standard clearance (A - B):
0.3 to 0.5 mm (0.012 to 0.0020 in.)
If the clearance exceeds the standard, replace transmission hub sleeve No. 3 and gear shift fork No. 3.

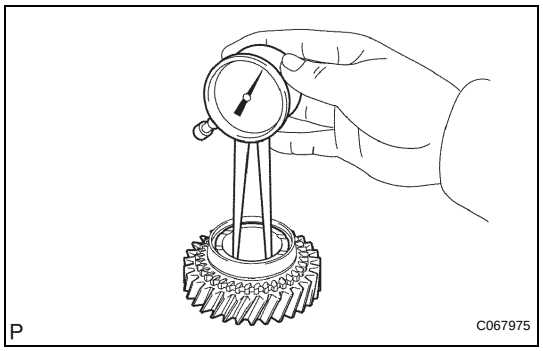

3. INSPECT 5TH GEAR

(a) Using a caliper gauge, measure the inside diameter of the 5th gear.
Standard inside diameter:
29.915 to 29.931 mm (1.1778 to 1.1783 in.)
Maximum inside diameter:
29.931 mm (1.1783 in.)
If the inside diameter exceeds the maximum, replace the 5th gear.

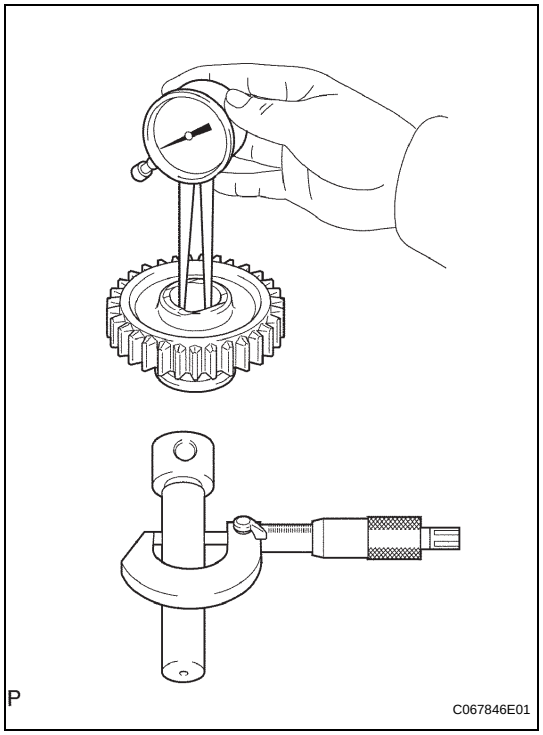

4. INSPECT REVERSE IDLER GEAR SUB-ASSEMBLY

(a) Using a caliper gauge, inspect the reverse idle gear.
Standard inside diameter:
18.040 to 18.058 mm (0.7102 to 0.7109 in.)
Maximum inside diameter:
18.058 mm (0.7109 in.)
If the inside diameter exceeds the maximum, replace the reverse idler gear sub-assembly.

(b) Using a micrometer, inspect the reverse idler gear shaft as shown in the illustration.
Standard outer diameter:
17.966 to 17.984 mm (0.7073 to 0.7080 in.)
Minimum outer diameter:
17.966 mm (0.7073 in.)
If the outer diameter is less than the minimum, replace the reverse idler gear shaft.

REASSEMBLY

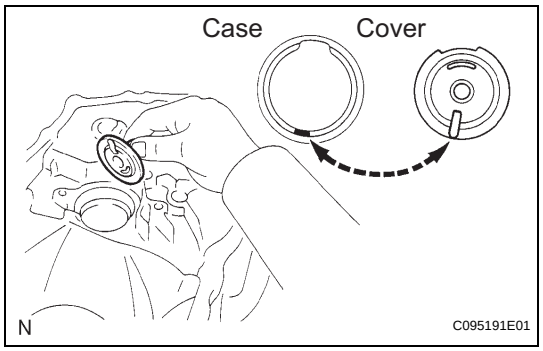

1. INSTALL OUTPUT SHAFT COVER

(a) Coat the output shaft cover with MP grease and install it onto the front transaxle case.
NOTICE:
Insert the output shaft cover projection into the case side hollow.

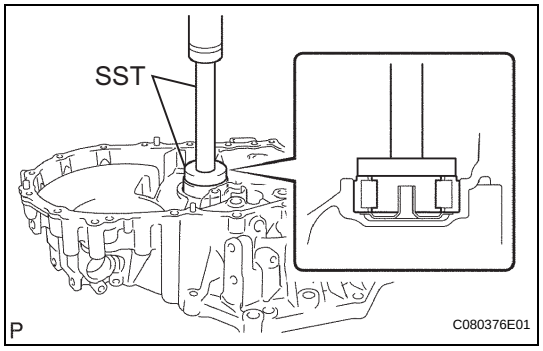

2. INSTALL OUTPUT SHAFT FRONT BEARING

(a) Coat a new output shaft front bearing with gear oil. Using SST and a press, install it onto the front transaxle case.
SST 09950-60010 (09951-00550), 09950-70010 (09951-07150)
NOTICE:
- **Install the new bearing in the correct direction, as shown in the illustration.**

- **When replacing the output shaft front bearing, replace the output shaft front bearing inner race at the same time.**

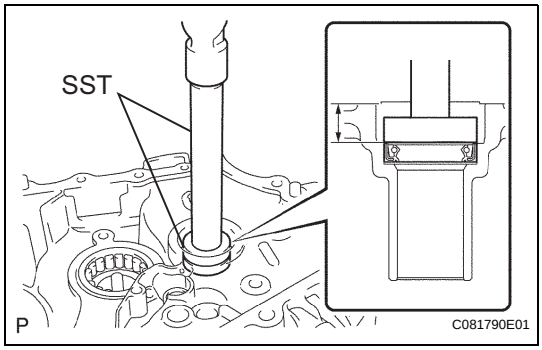

3. INSTALL FRONT TRANSAXLE CASE OIL SEAL

(a) Using SST and a hammer, install a new front transaxle case oil seal onto the front transalxe case.
SST 09950-60010 (09951-00370), 09950-70010 (09951-07150)
Drive in depth:
15.6 to 16.0 mm (0.6141 to 0.6299 in.)

(b) Coat the lip of the front transaxle case oil seal with MP grease.

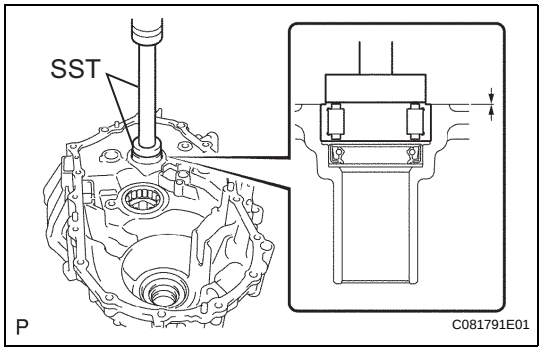

4. INSTALL INPUT SHAFT FRONT BEARING

(a) Coat a new input shaft front bearing with gear oil, and using SST and a press, install it onto the front transaxle case.
SST 09950-60010 (09951-00420), 09950-70010 (09951-07150)
Drive in depth:
0 to 0.3 mm (0 to 0.0118 in.)

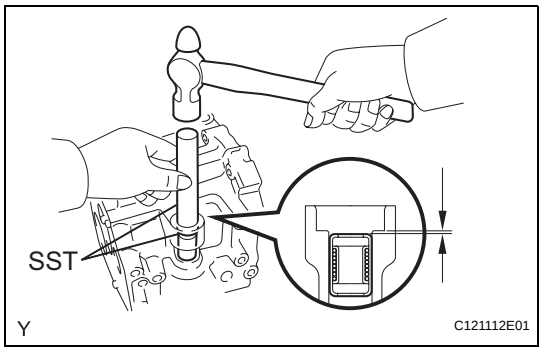

5. INSTALL SHIFT AND SELECT LEVER SHAFT SLIDE BALL BEARING

(a) Using SST and a hammer, install the shift and select lever shaft slide ball bearing onto the transmission case.
SST 09950-60010 (09951-00220), 09950-70010 (09951-07100)
Drive in depth:
0 to 0.5 mm (0 to 0.0020 in.)

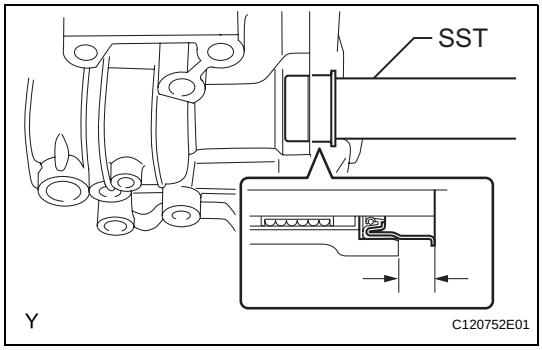

6. INSTALL SHIFT AND SELECT LEVER SHAFT OIL SEAL

(a) Using SST, install the shift and select lever shaft oil seal onto the transmission case.
SST 09950-70010 (09951-07150), 09950-60010 (09951-00240)
Drive in depth:
9.7 to 10.3 mm (0.382 to 0.406 in.)

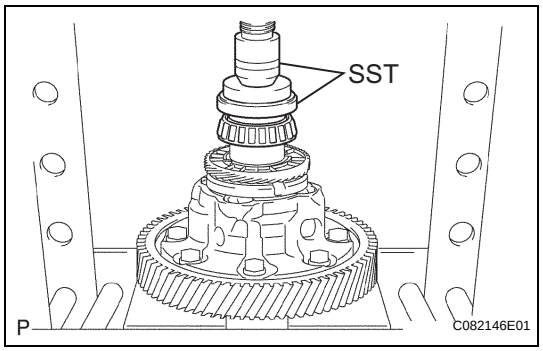

7. INSTALL FR DIFFERENTIAL CASE FRONT TAPERED ROLLER BEARING

(a) Using SST and a press, install the front differential case front tapered roller bearing (inner race) onto the front differential case.

SST 09350-32014 (09351-32120), 09950-60010 (09951-00530)

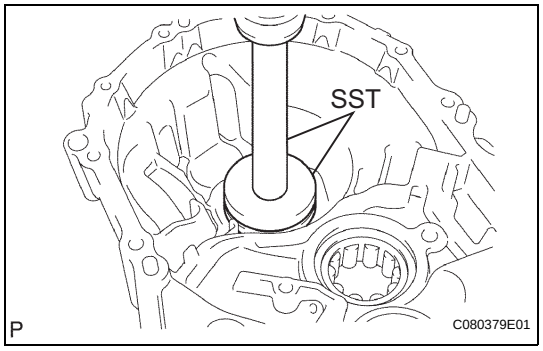

(b) Using SST and a press, install the front differential case front tapered roller bearing (outer race) together with the plate washer onto the front transaxle case.

SST 09950-60020 (09951-00680), 09950-70010 (09951-07150)

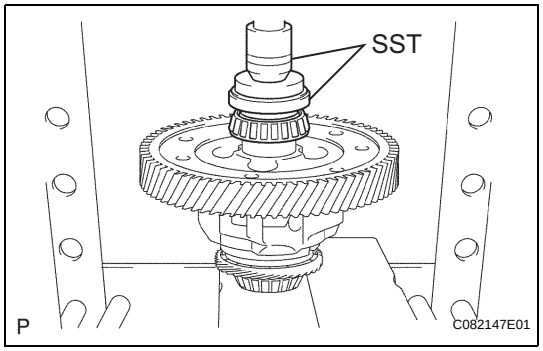

8. INSTALL FR DIFFERENTIAL CASE REAR TAPERED ROLLER BEARING

(a) Using SST and a press, install the front differential case rear tapered roller bearing (inner race) onto the differential case.

SST 09350-32014 (09351-32120), 09950-60010 (09951-00530)

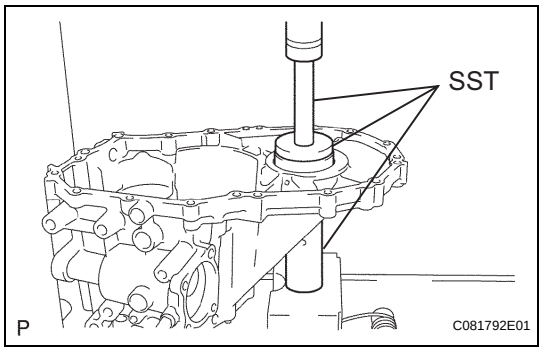

(b) Using SST and a press, install the front differential case rear tapered roller bearing (outer race) with plate washer onto the transmission case.

SST 09309-36010, 09950-60020 (09951-00710), 09950-70010 (09951-07150)

HINT:
Use a plate washer of the same thickness as the removed one.

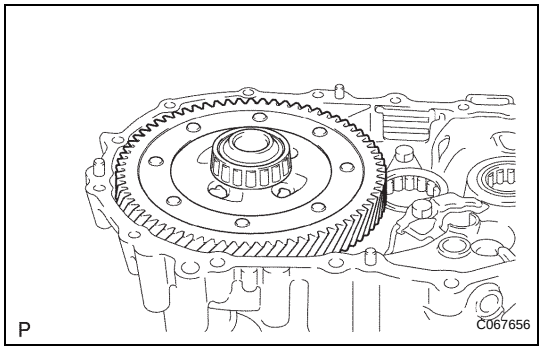

9. ADJUST DIFFERENTIAL SIDE BEARING PRELOAD

(a) Coat the differential case assembly with gear oil, and install it onto the front transaxle case.

(b) Install the manual transmission case with the 16 bolts.

Torque: 29 N*m (300 kgf*cm, 22 ft.*lbf)

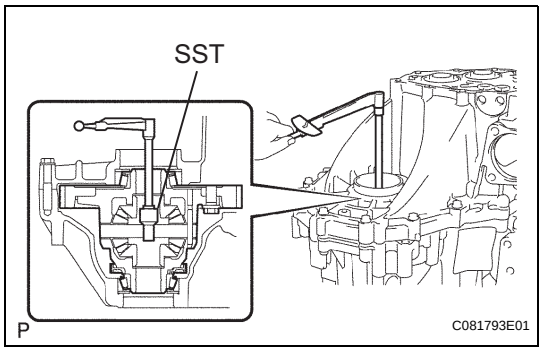

(c) Using SST and a torque wrench, turn the differential case assembly to the right and left 2 or 3 times to allow the bearings to settle.
SST 09564-32011

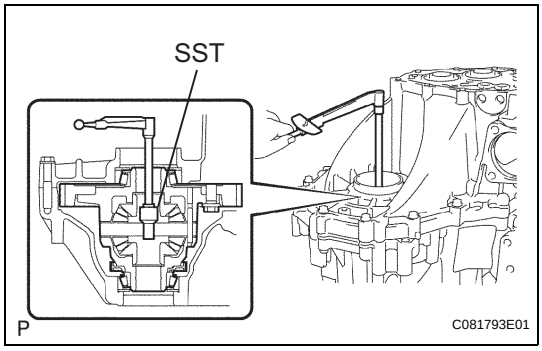

(d) Using SST and a torque wrench, measure the preload.
SST 09564-32011
Preload (at starting):
New bearing:
0.78 to 1.57 N*m (7.95 to 16.0 kgf*cm, 6.9 to 13.89 in.*lbf)
Used bearing:
0.49 to 0.98 N*m (5.0 to 10.0 kgf*cm, 4.34 to 8.67 in.*lbf)
If the preload is outside the specifications, select another plate washer.
Plate washer thickness

Mark	Thickness mm (in.)	Mark	Thickness mm (in.)
AA	2.10 (0.0827)	LL	2.60 (0.1024)
BB	2.15 (0.0846)	MM	2.65 (0.1043)
CC	2.20 (0.0866)	NN	2.70 (0.1063)
DD	2.25 (0.0886)	PP	2.75 (0.1083)
EE	2.30 (0.0906)	QQ	2.80 (0.1102)
FF	2.35 (0.0925)	RR	2.85 (0.1122)
GG	2.40 (0.0945)	SS	2.90 (0.1142)
HH	2.45 (0.0965)	TT	2.95 (0.1161)
JJ	2.50 (0.0984)	UU	3.00 (0.1181)
KK	2.55 (0.1004)	-	-

HINT:
The preload changes by approximately 0.3 to 0.4 N*m (3 to 4 kgf*cm, 2.6 to 3.5 in.*lbf) per each 0.05 mm (0.0020 in.) change in plate washer thickness.

(e) Remove the 16 bolts and the manual transmission case.

(f) Remove the differential case assembly from the front transaxle case.

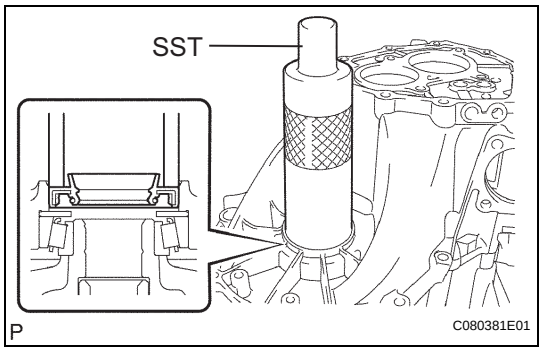

10. INSTALL TRANSMISSION CASE OIL SEAL

(a) Using SST and a hammer, install a new transmission case oil seal onto the manual transmission case.
SST 09316-60011 (09316-00011)
Drive in depth:
9.6 to 10.2 mm (0.378 to 0.402 in.)

(b) Coat the lip of the front transmission case oil seal with MP grease.

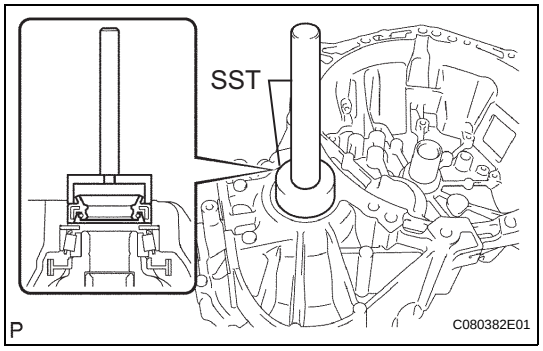

11. INSTALL TRANSAXLE CASE OIL SEAL

(a) Using SST and a hammer, install a new transaxle case oil seal onto the front transaxle case.
Drive in depth:
1.6 to2.2 mm (0.063 to 0.087 in.)
SST 09710-20011 (09710-06071), 09950-70010 (09951-07150)

(b) Coat the lip of the transaxle case oil seal with MP grease.

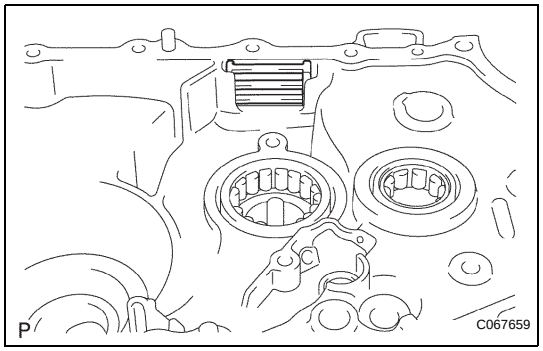

12. INSTALL TRANSMISSION MAGNET

(a) Clean the transmission magnet and install it onto the front transaxle case.

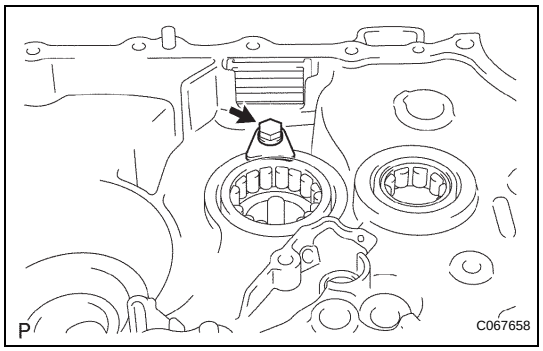

13. INSTALL BEARING LOCK PLATE

(a) Install the bearing lock plate onto the front transaxle case with the bolt.
Torque: 11 N*m (115 kgf*cm, 8.3 ft.*lbf)

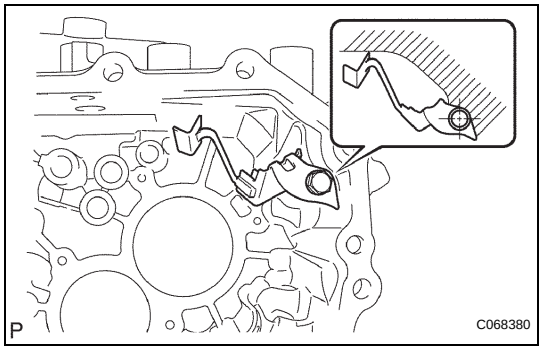

14. INSTALL OIL RECEIVER PIPE NO. 1

(a) Install oil receiver pipe No. 1 onto the manual transmission case with the bolt.
Torque: 17 N*m (175 kgf*cm, 13 ft.*lbf)
NOTICE:
- **Do not deform oil receiver pipe No. 1.**
- **Install the oil receiver pipe No. 1 while holding it against the manual transmission case, as shown in the illustration.**

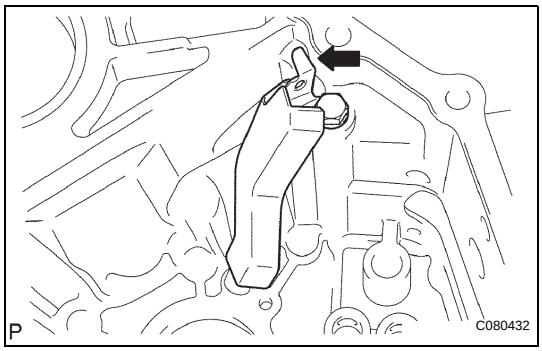

15. INSTALL OIL RECEIVER PIPE NO. 2

(a) Install the oil receiver pipe No. 2 onto the manual transmission case with the bolt.
Torque: 17 N*m (175 kgf*cm, 13 ft.*lbf)
NOTICE:
- **Do not deform oil receiver pipe No. 2.**
- **Install the oil receiver pipe No. 2 while holding it against the manual transmission case, as shown in the illustration.**

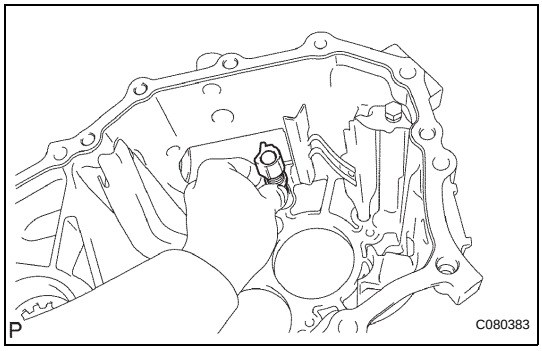

16. INSTALL REVERSE RESTRICT PIN ASSEMBLY

(a) Install the reverse restrict pin assembly onto the manual transmission case.
NOTICE:
Set the reverse restrict pin assembly in the correct orientation.

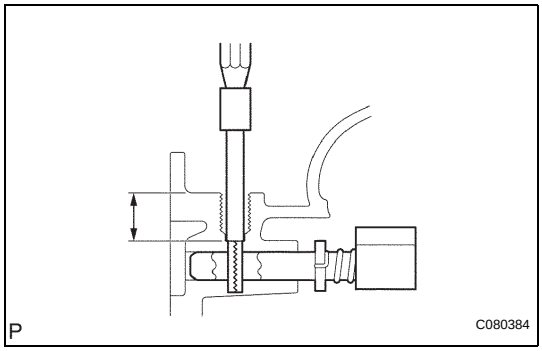

(b) Using a pin punch (ϕ5 mm) and a hammer, install the slotted pin onto the reverse restrict pin assembly.
Drive in depth:
15.5 to 16.5 mm (0.6102 to 0.6496 in.)

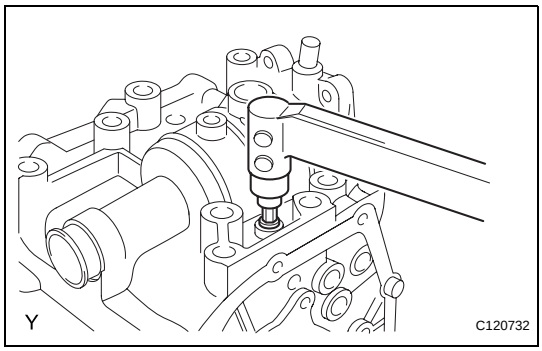

(c) Apply sealant to the reverse restrict pin plug.
Sealant:
Toyota Genuine Adhesive 1344, Three Bond 1344 or Equivalent

(d) Using a hexagon wrench and a torque wrench, install the reverse restrict pin plug onto the manual transmission case.
Torque: 13 N*m (130 kgf*cm, 9.3 ft.*lbf)

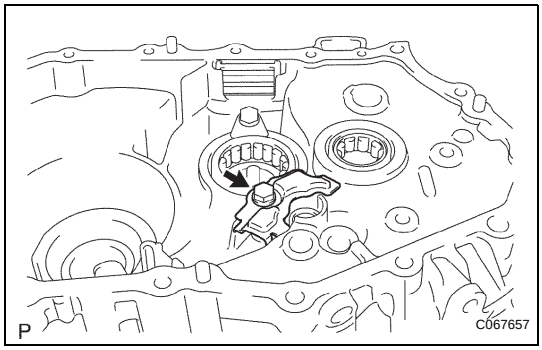

17. INSTALL MANUAL TRANSAXLE CASE RECEIVER

(a) Install the manual transaxle case receiver onto the front transaxle case with the bolt.
Torque: 11 N*m (115 kgf*cm, 8.3 ft.*lbf)

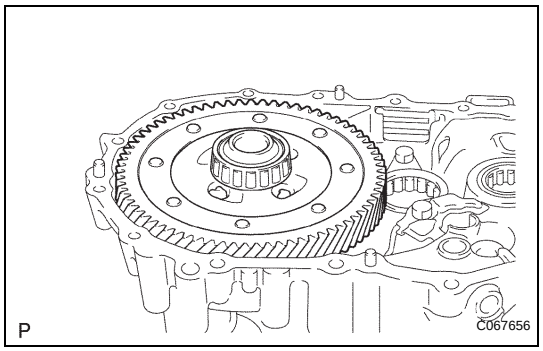

18. INSTALL DIFFERENTIAL CASE ASSEMBLY

(a) Coat the differential case tapered roller bearing with gear oil and install the differential case assembly onto the front transaxle case.

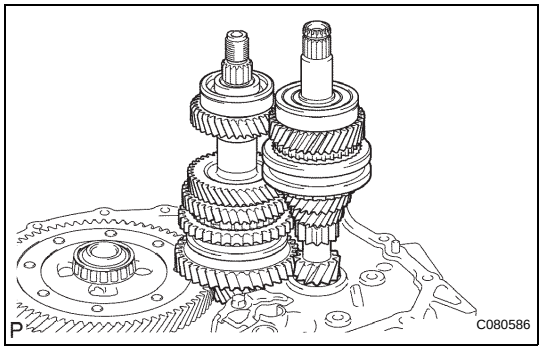

19. INSTALL INPUT SHAFT ASSEMBLY

(a) Coat the sliding and rotating surfaces of the input and output shafts with gear oil and install them onto the transaxle case.

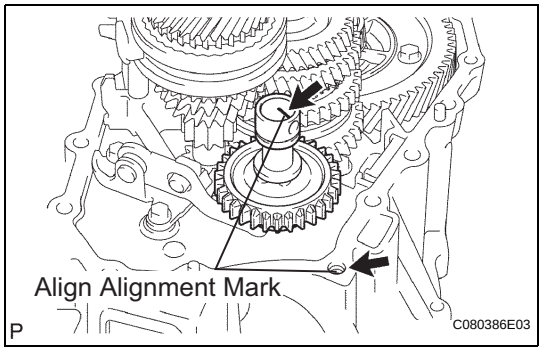

20. INSTALL REVERSE IDLER GEAR SUB-ASSEMBLY

(a) Coat the reverse idler gear sub-assembly, thrust washer and reverse idler gear shaft with gear oil and install them as shown in the illustration.
HINT:
Align the mark on the reverse idler gear shaft with the bolt hole shown in the illustration.

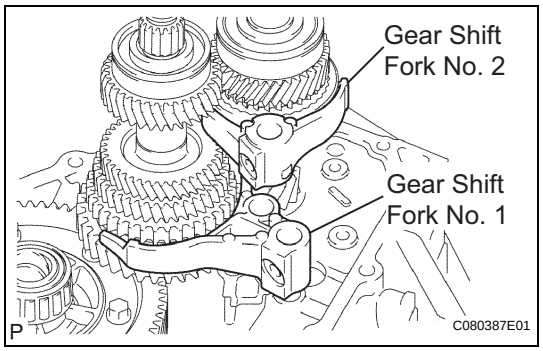

21. INSTALL GEAR SHIFT FORK SHAFT NO.1

(a) Coat gear shift fork No. 1 and gear shift fork No. 2 with gear oil and install them.

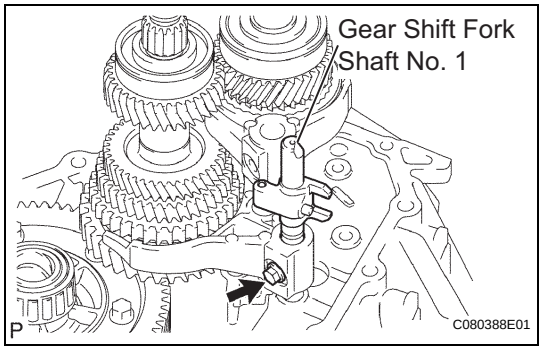

(b) Coat gear shift fork shaft No. 1 with gear oil and install it.

(c) Apply sealant to the shift fork set bolt.
Sealant:
Toyota Genuine Adhesive 1344, Three Bond 1344 or Equivalent

(d) Install the shift fork set bolt.
Torque: 16 N*m (160 kgf*cm, 12 ft.*lbf)

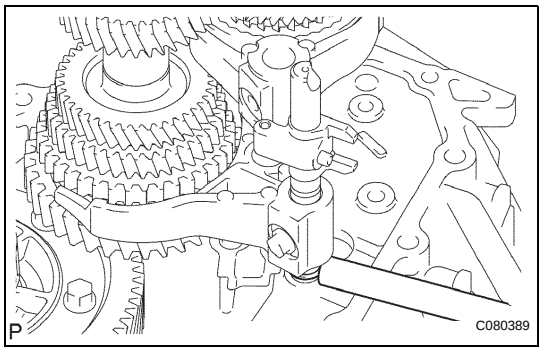

(e) Using a brass bar and a hammer, install a new shaft snap ring onto gear shift fork shaft No. 1.

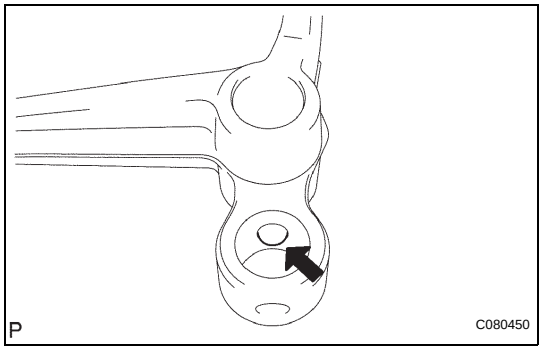

22. INSTALL GEAR SHIFT FORK SHAFT NO.3

(a) Coat the 2 shift fork balls with MP grease and install them onto the reverse shift fork.

(b) Install the reverse shift fork onto gear shift fork shaft No. 3.

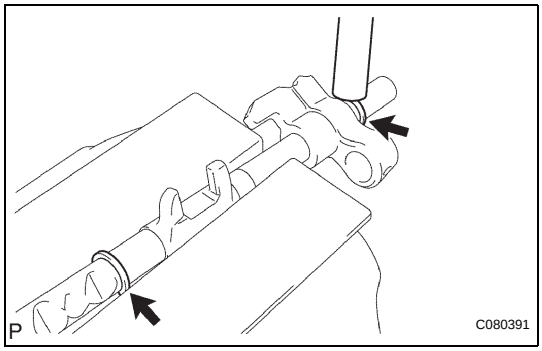

(c) Using a brass bar and a hammer, install 2 new shift fork shaft snap rings onto shift fork shaft No. 3.

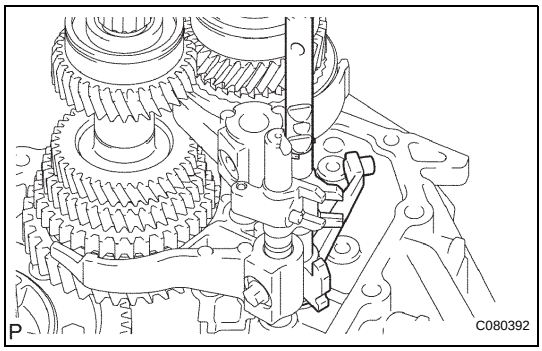

(d) Coat gear shift fork shaft No. 3 with gear oil and install it.

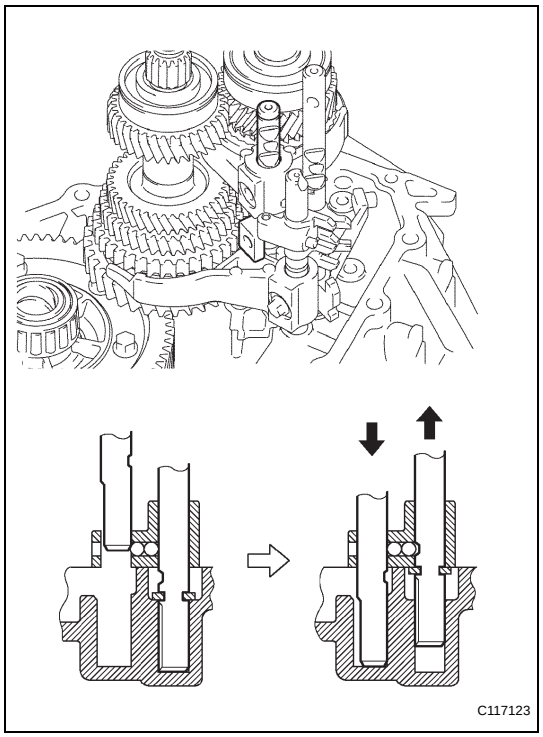

23. INSTALL GEAR SHIFT FORK SHAFT NO.2

(a) Coat gear shift head No. 1 and gear shift fork shaft No. 2 with gear oil and install them.

NOTICE:

To avoid interference by the 2 shift fork balls, lift up gear shift fork shaft No. 3 to the position shown in the illustration.

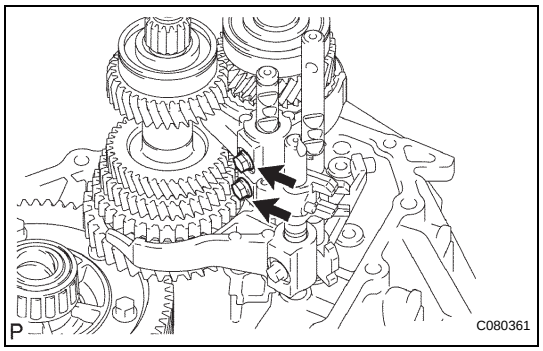

(b) Coat the 2 shift lock bolts with sealant and install them onto gear shift fork No. 2 and shift head No. 1.

Sealant:

Toyota Genuine Adhesive 1344, Three Bond 1344 or Equivalent

Torque: 16 N*m (160 kgf*cm, 12 ft.*lbf)

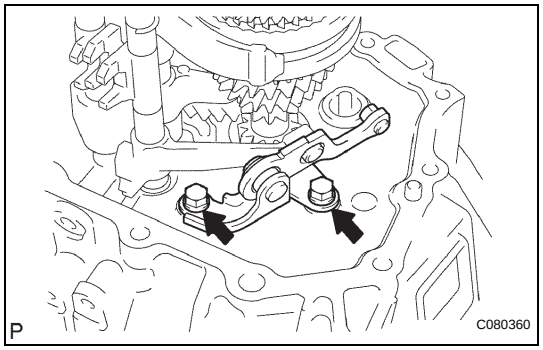

24. INSTALL REVERSE SHIFT ARM BRACKET ASSEMBLY

(a) Install the reverse shift arm bracket assembly onto the front transaxle case with 2 bolts.

Torque: 17 N*m (175 kgf*cm, 13 ft.*lbf)

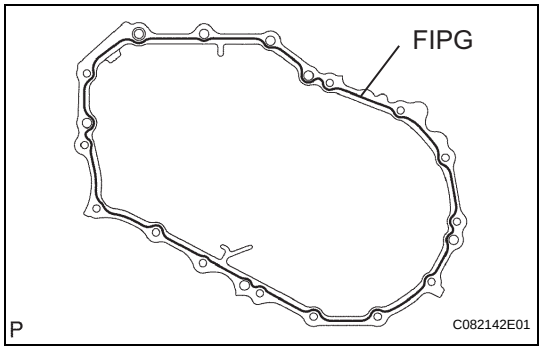

25. INSTALL MANUAL TRANSMISSION CASE

(a) Apply FIPG to the manual transmission case, as shown in the illustration.

FIPG:

Toyota Genuine Seal Packing 1281, Three Bond 1281 or Equivalent

NOTICE:

Assemble the parts within 10 minutes of application. Otherwise, the packing (FIPG) material must be removed and reapplied.

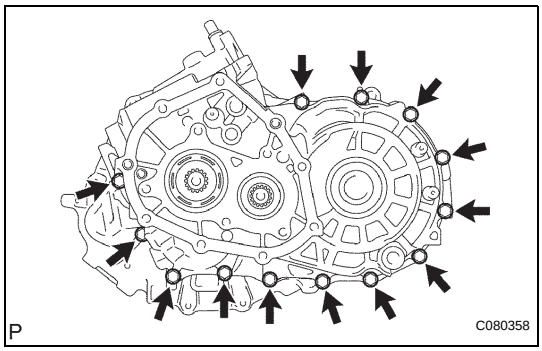

(b) Install the 13 bolts onto the manual transmission side.
Torque: 29 N*m (300 kgf*cm, 22 ft.*lbf)

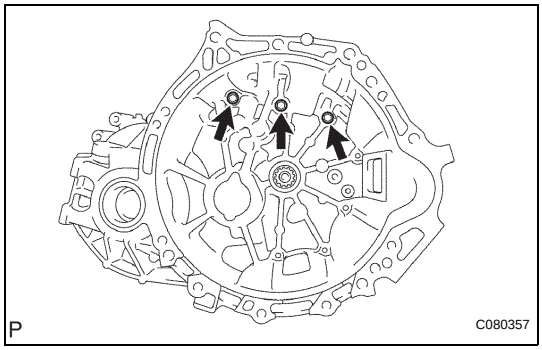

(c) Install the 3 bolts onto the manual transaxle side.
Torque: 29 N*m (300 kgf*cm, 22 ft.*lbf)

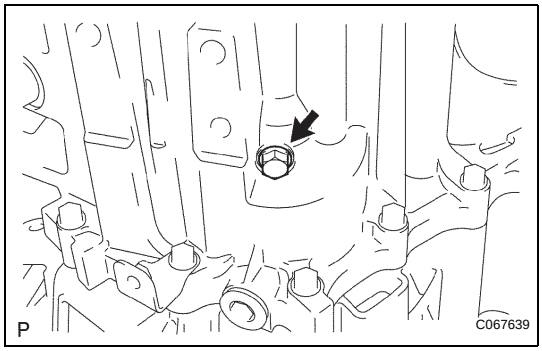

26. INSTALL REVERSE IDLER GEAR SHAFT BOLT

(a) Coat the reverse idler gear shaft bolt with sealant and install it with a new gasket.
Sealant:
Toyota Genuine Adhesive 1344, Three Bond 1344 or Equivalent
Torque: 29 N*m (300 kgf*cm, 22 ft.*lbf)

MX

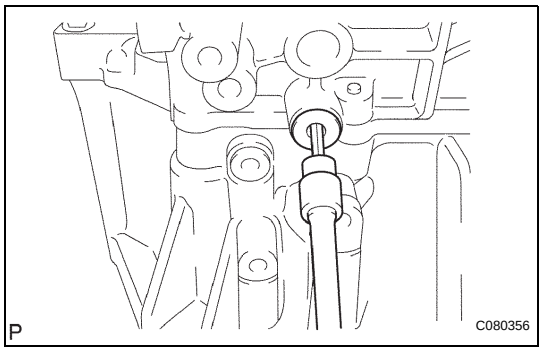

27. INSTALL LOCK BALL ASSEMBLY NO.2

(a) Coat lock ball assembly No. 2 with sealant and install it with a hexagon wrench.
Sealant:
Toyota Genuine Adhesive 1344, Three Bond 1344 or Equivalent
Torque: 29 N*m (300 kgf*cm, 22 ft.*lbf)

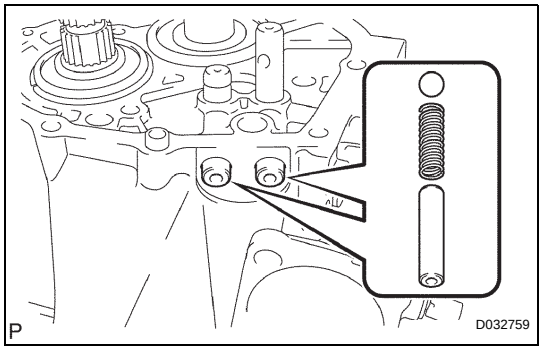

28. INSTALL SHIFT DETENT BALL

(a) Install the 2 shift detent balls, 2 shift detent ball springs and 2 shift detent ball spring seats No. 1 onto the manual transmission case.

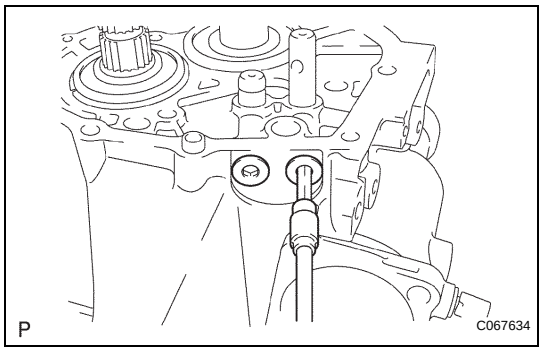

(b) Coat the 2 shift detent ball plugs with sealant and install them using a hexagon wrench.
Sealant:
Toyota Genuine Adhesive 1344, Three Bond 1344 or Equivalent
Torque: 22 N*m (224 kgf*cm, 16 ft.*lbf)

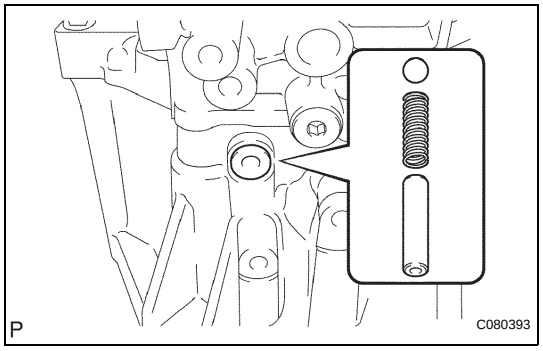

(c) Install the shift detent ball, shift detent ball compression spring and shift detent ball spring seat No. 1 onto the front transaxle case.

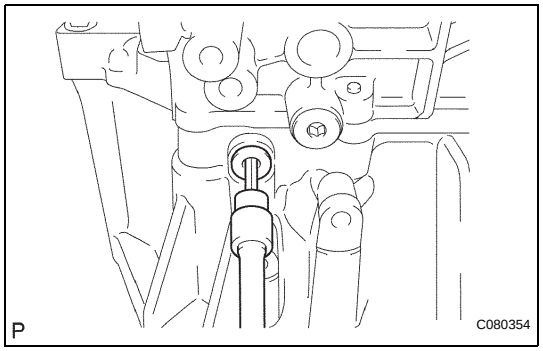

(d) Coat the shift detent ball plug with sealant and install it using a hexagon wrench.
Sealant:
Toyota Genuine Adhesive 1344, Three Bond 1344 or Equivalent
Torque: 22 N*m (224 kgf*cm, 16 ft.*lbf)

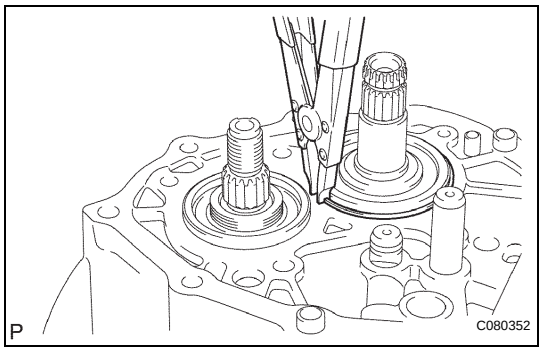

29. INSTALL INPUT SHAFT REAR BEARING HOLE SNAP RING

(a) Using a snap ring expander, install the input shaft rear bearing hole snap ring onto the input shaft.

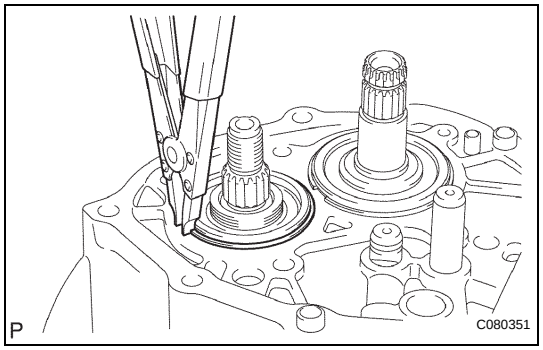

30. INSTALL OUTPUT SHAFT REAR BEARING HOLE SNAP RING

(a) Using a snap ring expander, install the output shaft rear bearing hole snap ring onto the output shaft.

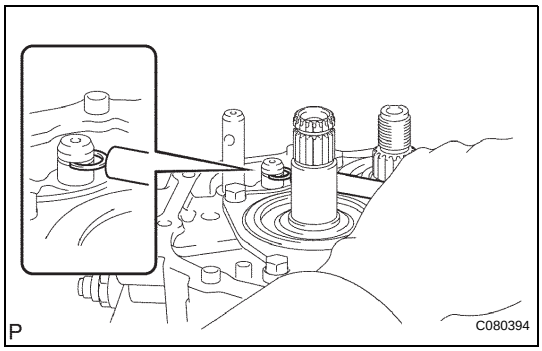

31. INSTALL SHIFT FORK SHAFT SHAFT SNAP RING

(a) Using a brass bar and a hammer, install a new shift fork shaft shaft snap ring onto the shift fork shaft No. 2.

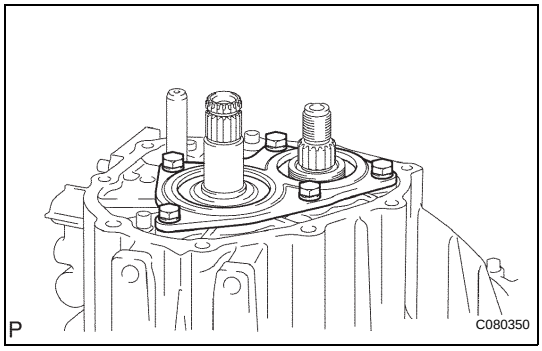

32. INSTALL BEARING RETAINER REAR

(a) Coat the 5 bolts with sealant, and install the bearing retainer rear onto the manual transmission case with the 5 bolts.
Torque: 27 N*m (280 kgf*cm, 20 ft.*lbf)

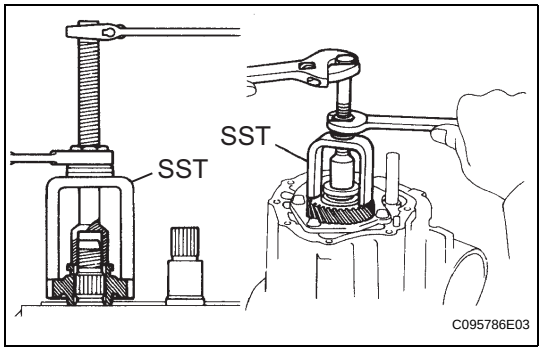

33. INSTALL 5TH DRIVEN GEAR

(a) Using SST, install the 5th driven gear onto the output shaft.
SST 09309-12020

MX

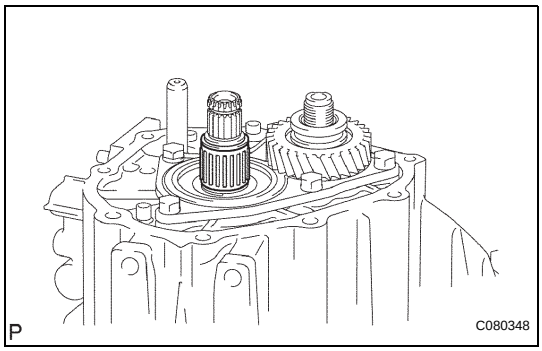

34. INSTALL 5TH GEAR NEEDLE ROLLER BEARING

(a) Coat the 5th gear needle roller bearing and 5th gear bearing spacer with gear oil, and install them onto the input shaft.

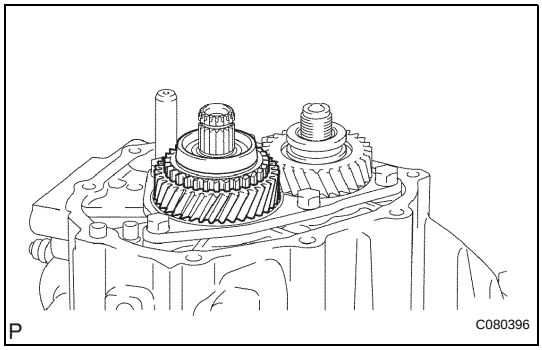

35. INSTALL 5TH GEAR

(a) Coat the 5th gear with gear oil and install it onto the input shaft.

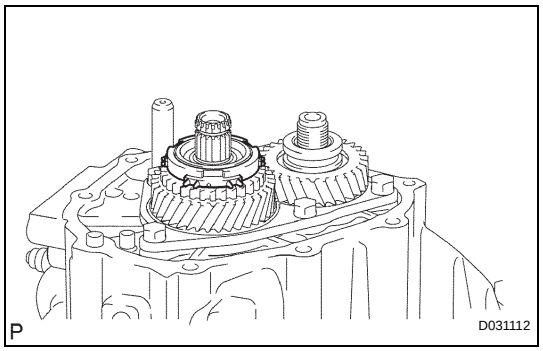

36. INSTALL SYNCHRONIZER RING NO.3

(a) Coat synchronizer ring No. 3 with gear oil and install it onto the 5th gear.

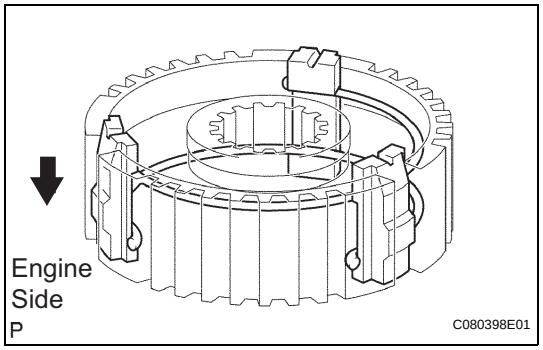

37. INSTALL TRANSMISSION CLUTCH HUB NO.3

(a) Install the 3 synchromesh shifting keys and 2 synchromesh shifting key springs onto the transmission clutch hub No. 3, as shown in the illustration.

NOTICE:

Do not set the 2 shifting key spring openings in the same position.

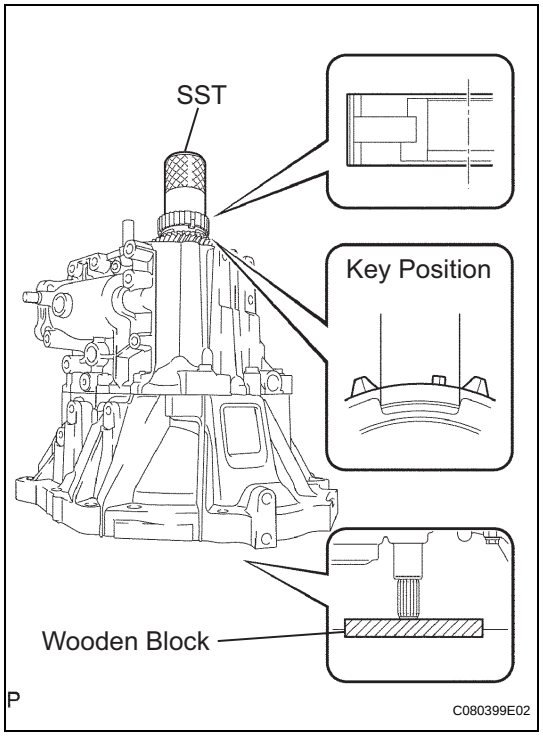

(b) Using SST and a hammer, install transmission clutch hub No. 3 onto the input shaft.

SST 09636-20010

NOTICE:

- **Do not install transmission clutch hub No. 3 in the wrong direction.**
- **Install the transmission clutch hub No. 3 with the synchronizer ring No. 3 key groove and synchromesh shifting key No. 3 aligned.**
- **Check that the 5th gear is rotating.**
- **Place a suitable sized wooden block to support the input shaft.**

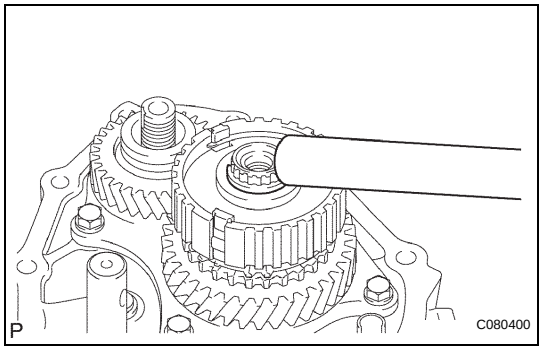

(c) Select a clutch hub No. 3 shaft snap ring that will allow minimum axial play.

Clearance:

0.1 mm or less

Snap ring thickness

Mark	Thickness mm (in.)	Mark	Thickness mm (in.)
A	2.25 (0.0886)	E	2.49 (0.0980)
B	2.31 (0.0909)	F	2.55 (0.1004)
C	2.37 (0.0933)	G	2.61 (0.1028)

MX

Mark	Thickness mm (in.)	Mark	Thickness mm (in.)
D	2.43 (0.0957)	-	-

(d) Using a brass bar and a hammer, install the snap ring onto the input shaft.

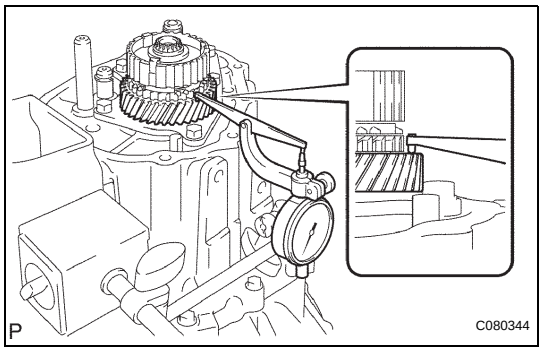

38. INSPECT 5TH GEAR THRUST CLEARANCE

(a) Using a dial indicator, measure the 5th gear thrust clearance.
Standard clearance:
0.1 to 0.55 mm (0.0039 to 0.0217 in.)
Maximum clearance:
0.55 mm (0.0217 in.)
If the clearance exceeds the maximum, replace transmission clutch hub No. 3, the 5th gear or input shaft rear radial ball bearing.

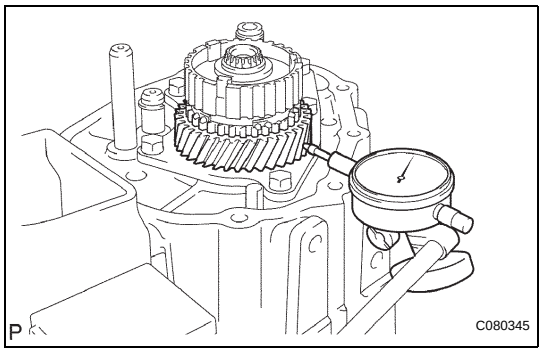

39. INSPECT 5TH GEAR RADIAL CLEARANCE

(a) Using a dial indicator, measure 5th gear radial clearance.
Standard clearance:
KOYO made:
0.015 to 0.058 mm (0.0006 to 0.0023 in.)
NSK made:
0.015 to 0.056 mm (0.0006 to 0.0022 in.)
Maximum clearance:
KOYO made:
0.058 mm (0.0023 in.)
NSK made:
0.056 mm (0.0022 in.)
If the clearance exceeds the maximum, replace the 5th gear, 5th gear needle roller bearing or input shaft.

MX

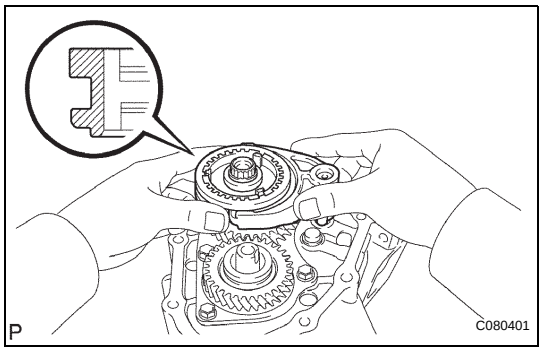

40. INSTALL GEAR SHIFT FORK NO.3

(a) Coat transmission clutch hub sleeve No. 3 with gear oil and install it together with gear shift fork No. 3 onto transmission clutch hub No. 3.
HINT:
Set the transmission clutch hub No. 3 in the correct orientation.

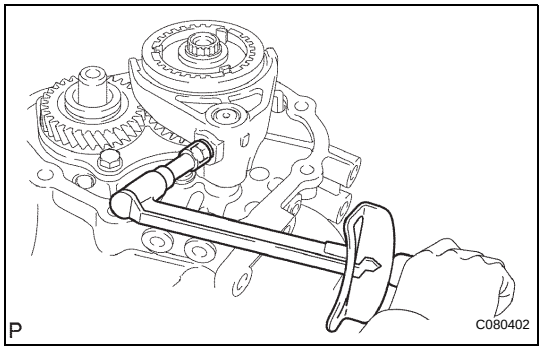

(b) Coat the gear shift fork lock bolt with sealant, and install it onto gear shift fork No. 3.
Sealant:
Toyota Genuine Adhesive 1344, Three Bond 1344 or Equivalent
Torque: 16 N*m (160 kgf*cm, 12 ft.*lbf)

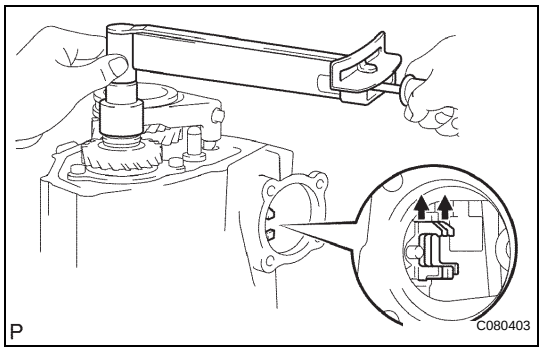

41. INSTALL MANUAL TRANSMISSION OUTPUT SHAFT REAR SET NUT

(a) Engage the 2 gears simultaneously to lock the transmission.

(b) Coat a new manual transmission output shaft rear set nut with sealant.
Sealant:
Toyota Genuine Adhesive 1344, Three Bond 1344 or Equivalent

(c) Install the new manual transmission output shaft rear set nut.
Torque: 118 N*m (1,200 kgf*cm, 87 ft.*lbf)

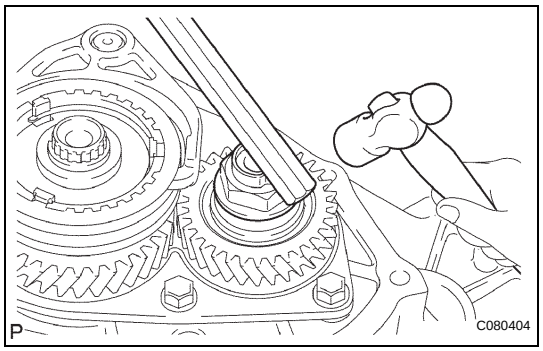

(d) Using a chisel and a hammer, stake the manual transmission output shaft rear set nut.

(e) Disengage the 2 gears.

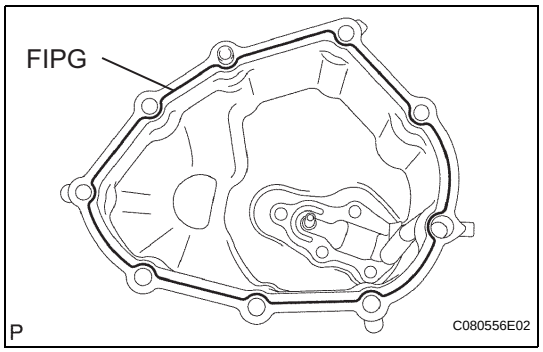

42. INSTALL MANUAL TRANSMISSION CASE COVER SUB-ASSEMBLY

(a) Apply FIPG to the manual transaxle case cover sub-assembly as shown in the illustration.
FIPG:
Toyota Genuine Seal Packing 1281, Three Bond 1281 or Equivalent
NOTICE:
Assemble the parts within 10 minutes of application. Otherwise, the packing (FIPG) material must be removed and reapplied.

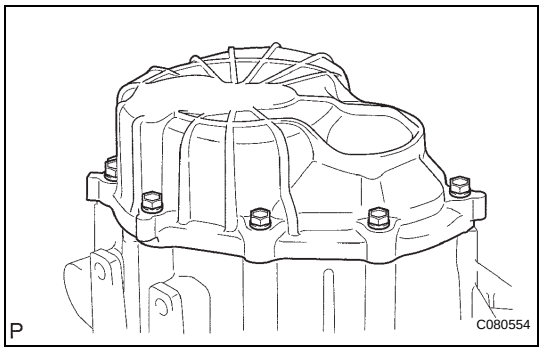

(b) Install the manual transmission case cover sub-assembly onto the manual transmission case with the 9 bolts.
Torque: 18 N*m (185 kgf*cm, 14 ft.*lbf)

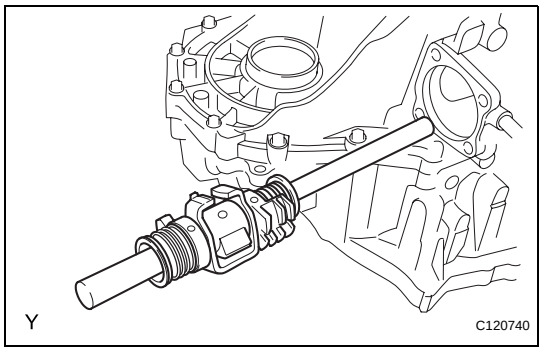

43. INSTALL SHIFT AND SELECT LEVER SHAFT ASSEMBLY

(a) Coat the shift and select lever shaft assembly with gear oil, and install it onto the transmission case.

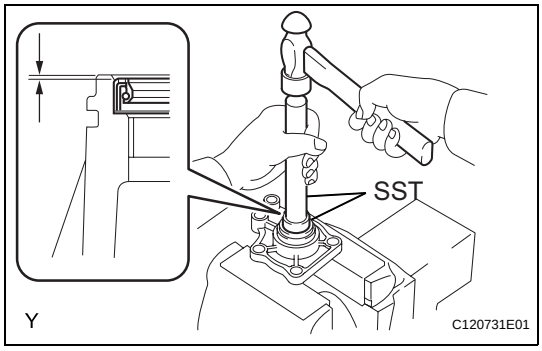

44. INSTALL CONTROL SHAFT COVER OIL SEAL

(a) Using SST and a hammer, install a new control shaft cover oil seal onto the control shaft cover.
Drive in depth:
0.2 to 1.2 mm (0.0079 to 0.0472 in.)
SST 09950-60010 (09951-00280), 09950-70010 (09951-07150)

(b) Coat the control shaft cover oil seal with MP grease.

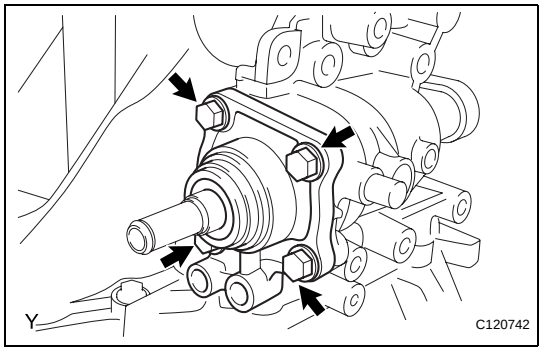

45. INSTALL CONTROL SHAFT COVER

(a) Coat the 4 bolts with sealant. Install a new gasket and control shaft cover onto the manual transmission case with the 4 bolts.
Torque: 20 N*m (200 kgf*cm, 14 ft.*lbf)
Sealant:
Toyota Genuine Adhesive 1344, Three Bond 1344 or Equivalent
NOTICE:
Set the claws of the shift interlock plate into the shift head part of the gear shift fork shaft securely.

MX

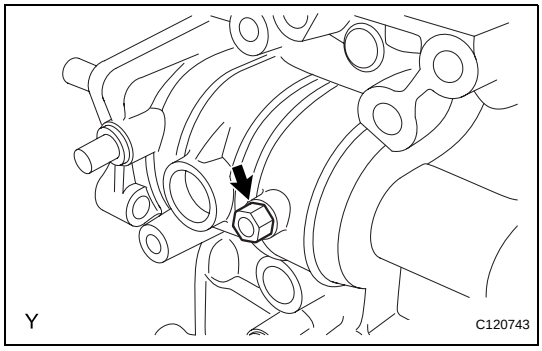

46. INSTALL SHIFT GATE PIN

(a) Coat the shift gate pin with sealant.

(b) Install the washer and shift gate pin.
Torque: 11 N*m (112 kgf*cm, 8.1 ft.*lbf)
Sealant:
Toyota Genuine Adhesive 1344, Three Bond 1344 or Equivalent

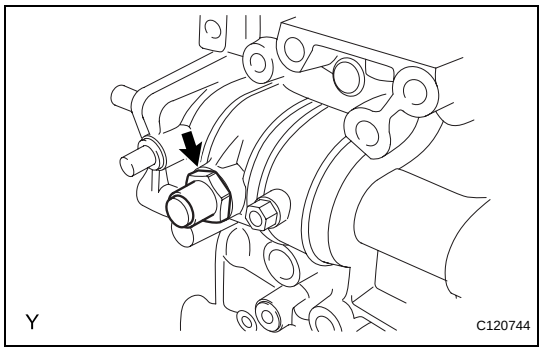

47. INSTALL LOCK BALL ASSEMBLY NO.1

(a) Coat lock ball assembly No. 1 with sealant, install it onto the manual transmission case.
Torque: 29 N*m (300 kgf*cm, 22 ft.*lbf)
Sealant:
Toyota Genuine Adhesive 1344, Three Bond 1344 or Equivalent

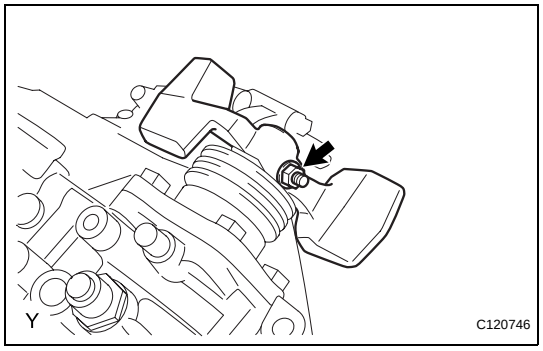

48. INSTALL SHIFT LEVER DAMPER

(a) Install the dust boot onto the control shaft cover.
(b) Install the shift lever damper with the lock pin onto the shift and select lever shaft assembly.
(c) Install the spring washer with the nut.
Torque: 12 N*m (120 kgf*cm, 8.7 ft.*lbf)

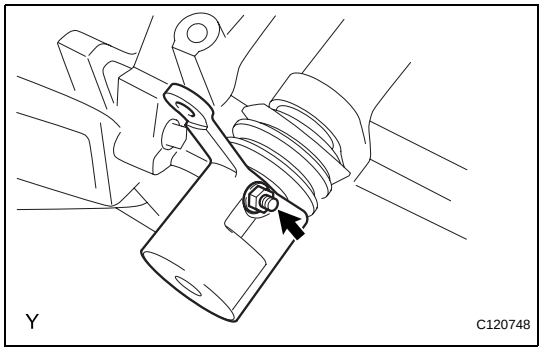

49. INSTALL FLOOR SHIFT CONTROL SHIFT LEVER

(a) Install the dust boot onto the shift and select lever shaft oil seal.
(b) Install the floor shift control shift lever with the lock pin onto the shift and select lever shaft assembly.
(c) Install the spring washer with the nut.
Torque: 12 N*m (120 kgf*cm, 8.7 ft.*lbf)

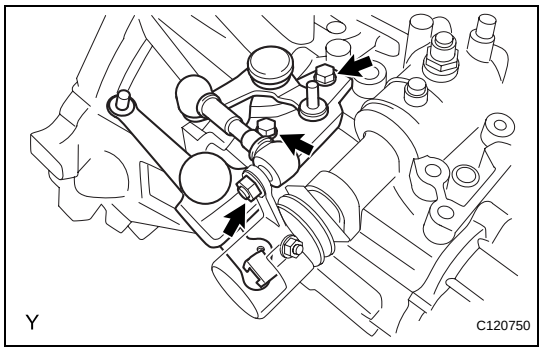

50. INSTALL SELECTING BELL CRANK ASSEMBLY

(a) Install the selecting bell crank assembly together with the control shift lever bush onto the manual transmission case with the 2 bolts and nut.
Torque: 25 N*m (250 kgf*cm, 18 ft.*lbf) for bolt
12 N*m (120 kgf*cm, 8.7 ft.*lbf) for nut
NOTICE:
Apply MP grease to the inside circumferential surface of the control shift lever bush.

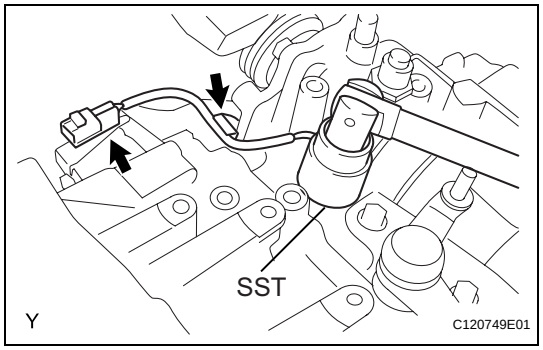

51. INSTALL BACK-UP LIGHT SWITCH ASSEMBLY

(a) Using SST, install the back-up light switch assembly onto the manual transmission case with a new gasket.
SST 09817-16011
Torque: 40 N*m (410 kgf*cm, 30 ft.*lbf)
(b) Install the back-up light switch wire harness into the 2 clamps.

52. INSTALL SPEEDOMETER SENSOR (w/o ABS)

(a) Install a new O-ring onto the speedometer sensor.

(b) Install the speedometer sensor onto the transaxle case with the bolt.
Torque: 11 N*m (115 kgf*cm, 8.3 ft.*lbf)

53. INSTALL SPEEDOMETER DRIVEN HOLE COVER SUB-ASSEMBLY

(a) Install a new O-ring onto the speedometer driven hole cover sub-assembly.

(b) Install the speedometer driven hole cover sub-assembly onto the manual transaxle case with the bolt.
Torque: 11 N*m (115 kgf*cm, 8.3 ft.*lbf)

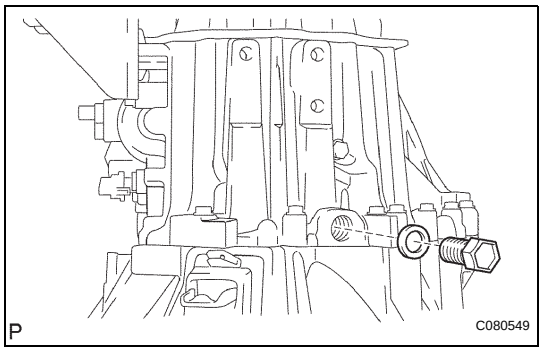

54. INSTALL MANUAL TRANSMISSION FILLER PLUG

(a) Install the manual transmission filler plug onto the manual transmission case with a new gasket.
Torque: 39 N*m (400 kgf*cm, 29 ft.*lbf)

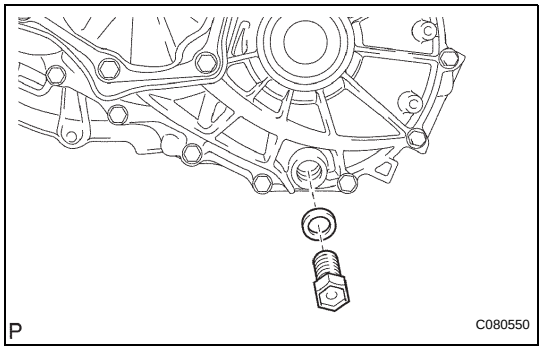

55. INSTALL DRAIN PLUG SUB-ASSEMBLY

(a) Install the drain plug onto the manual transmission case with a new gasket.
Torque: 39 N*m (400 kgf*cm, 29 ft.*lbf)

INPUT SHAFT

COMPONENTS

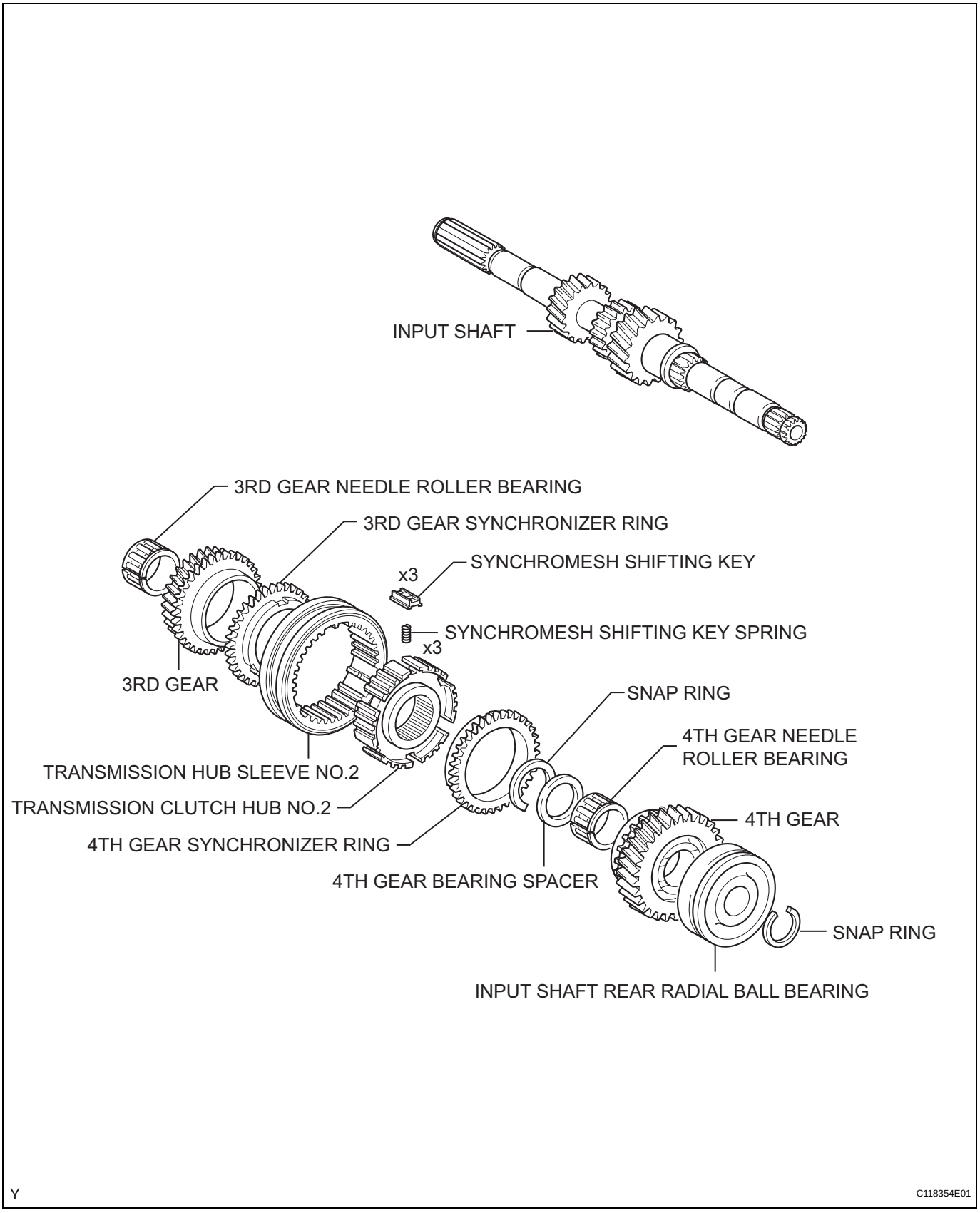

MX

DISASSEMBLY

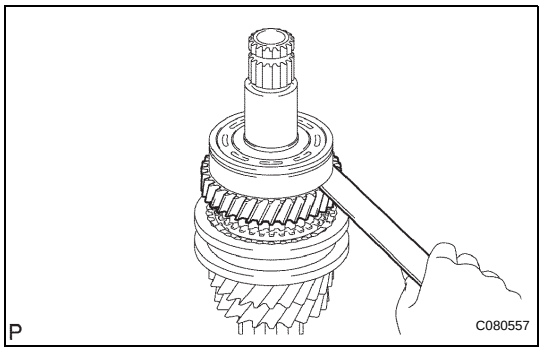

1. INSPECT 4TH GEAR THRUST CLEARANCE

(a) Using a feeler gauge, measure the 4th gear thrust clearance.

Standard clearance:
0.1 to 0.55 mm (0.0039 to 0.0217 in.)
Maximum clearance:
0.55 mm (0.0217 in.)

If the clearance exceeds the maximum, replace transmission clutch hub No. 2, the 4th gear or input shaft rear radial ball bearing.

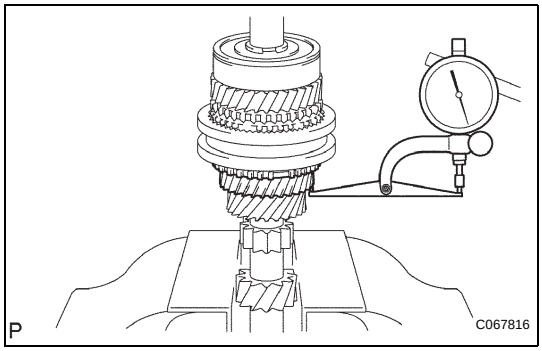

2. INSPECT 3RD GEAR THRUST CLEARANCE

(a) Using a dial gauge, measure the 3rd gear thrust clearance.

Standard clearance:
0.1 to 0.35 mm (0.0039 to 0.0138 in.)
Maximum clearance:
0.35 mm (0.0138 in.)

If the clearance exceeds the maximum, replace transmission clutch hub No. 2, the 3rd gear or input shaft.

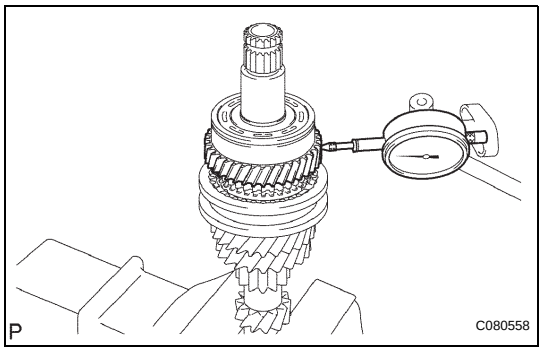

3. INSPECT 4TH GEAR RADIAL CLEARANCE

(a) Using a dial indicator, measure the 4th gear radial clearance between the gear and shaft.

Standard clearance:
0.009 to 0.050 mm (0.0004 to 0.0020 in.)
Maximum clearance:
0.050 mm (0.0020 in.)

If the clearance exceeds the maximum, replace the 4th gear, 4th gear needle roller bearing or input shaft.

MX

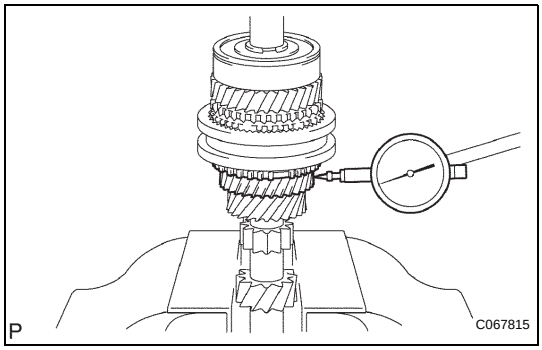

4. INSPECT 3RD GEAR RADIAL CLEARANCE

(a) Using a dial gauge, measure the 3rd gear radial clearance between the gear and shaft.

Standard clearance:
KOYO made bearing:
0.015 to 0.058 mm (0.0006 to 0.0023 in.)
NSK made bearing:
0.015 to 0.056 mm (0.0006 to 0.0022 in.)
Maximum clearance:
KOYO made:
0.058 mm (0.0023 in.)
NSK made:
0.056 mm (0.0022 in.)

If the clearance exceeds the maximum, replace the 3rd gear, 3rd gear needle roller bearing or input shaft.

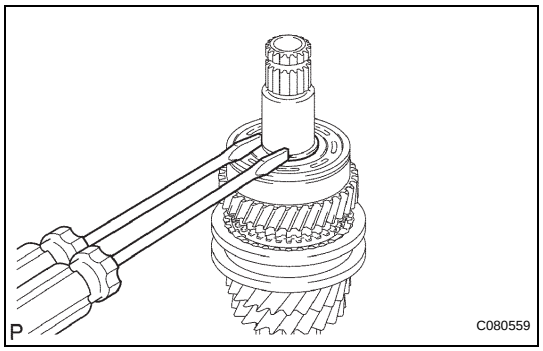

5. REMOVE 4TH GEAR

(a) Using 2 screwdrivers and a hammer, remove the input shaft rear bearing shaft snap ring from the input shaft.
HINT:
Use a shop rag or piece of cloth to keep the snap ring from flying off.

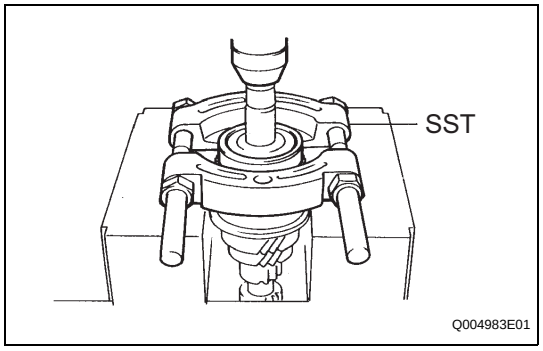

(b) Using SST and a press, remove the input shaft rear radial ball bearing and 4th gear from the input shaft.
SST 09950-00020
HINT:
- Do not tighten SST excessively.
- Support the input shaft assembly by hand to prevent it from dropping off.

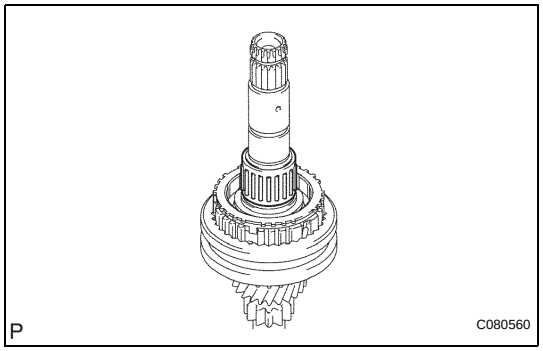

6. REMOVE 4TH GEAR NEEDLE ROLLER BEARING

(a) Remove the 4th gear needle roller bearing and 4th gear bearing spacer from the input shaft.

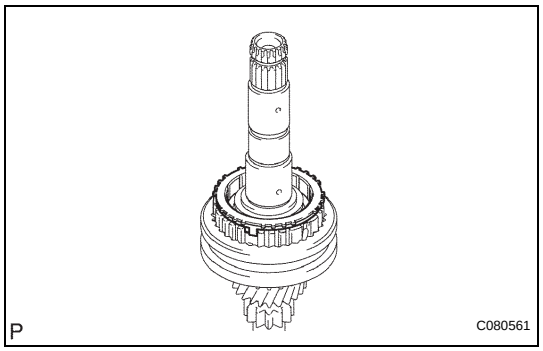

7. REMOVE 4TH GEAR SYNCHRONIZER RING

(a) Remove synchronizer ring No. 2 from transmission clutch hub No. 2.

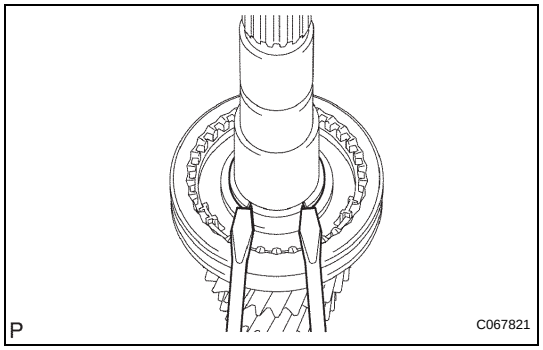

8. REMOVE 3RD GEAR

(a) Using 2 screwdrivers and a hammer, remove the clutch hub No. 2 setting shaft snap ring from the input shaft.
HINT:
Use a shop rag or piece of cloth to keep the snap ring from flying off.

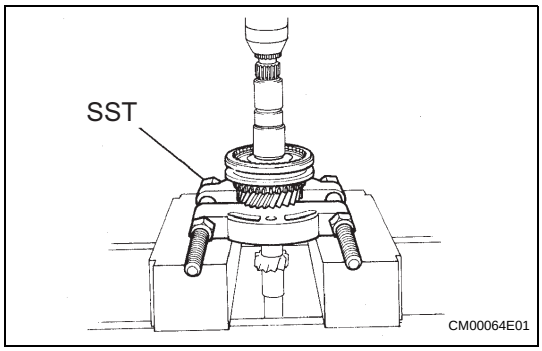

(b) Using SST and a press, remove transmission clutch hub No. 2 and the 3rd gear from the input shaft.
SST 09950-00020
NOTICE:
- **Do not tighten SST excessively.**
- **Support the input shaft by hand to prevent it from dropping off.**

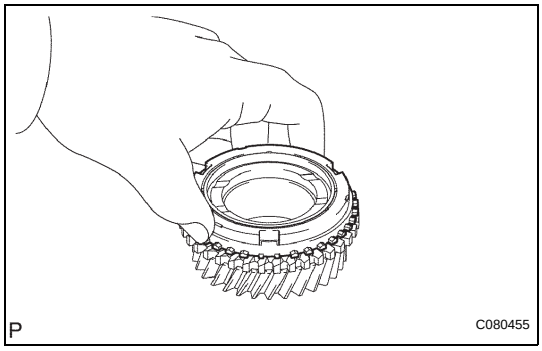

9. REMOVE 3RD GEAR SYNCHRONIZER RING
(a) Remove synchronizer ring No. 2 from the 3rd gear.

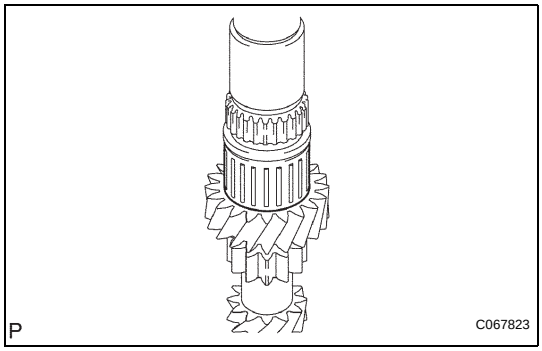

10. REMOVE 3RD GEAR NEEDLE ROLLER BEARING
(a) Remove the 3rd gear needle roller bearing from the input shaft.

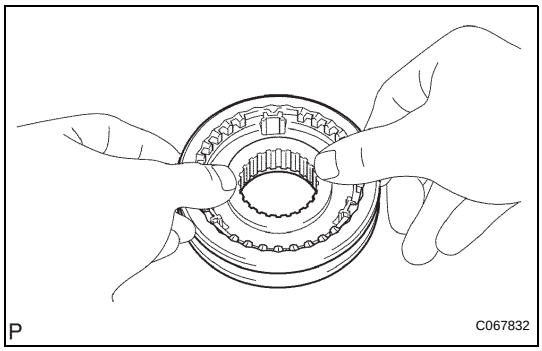

11. REMOVE TRANSMISSION HUB SLEEVE NO.2
(a) Remove transmission hub sleeve No. 2, the 3 shifting keys and 3 shifting key springs from transmission clutch hub No. 2.
NOTICE:
Use a shop rag or piece of cloth to keep the shifting key and shifting key spring from flying off.

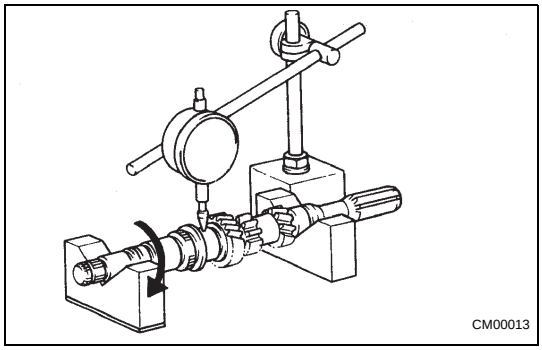

INSPECTION

1. INSPECT INPUT SHAFT
(a) Using a dial gauge, check the input shaft runout.
Maximum runout:
0.015 mm (0.0006 in.)
If the runout exceeds the maximum, replace the input shaft.

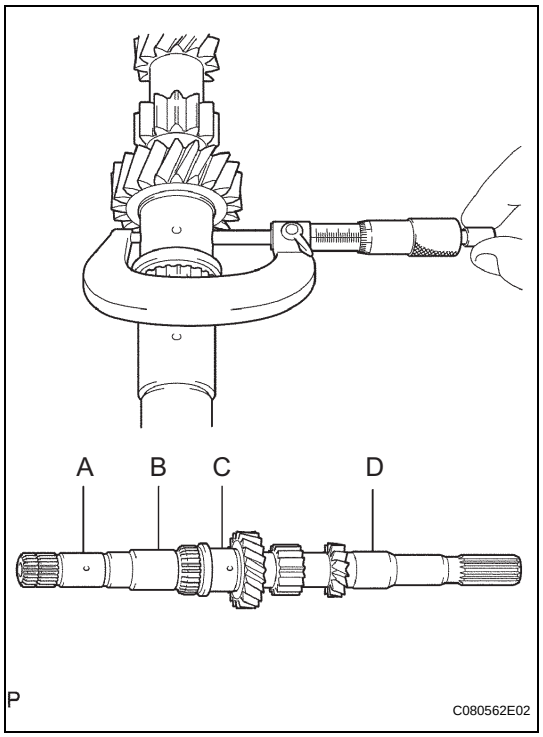

(b) Using a micrometer, measure the outer diameter of the input shaft journal surface, at the locations indicated.

Standard outer diameter:
Part A:
24.885 to 24.900 mm (0.9797 to 0.9803 in.)
Part B:
28.991 to 29.006 mm (1.1414 to 1.1420 in.)
Part C:
30.985 to 31.000 mm (1.2198 to 1.2204 in.)
Part D:
24.985 to 25.000 mm (0.9836 to 0.9842 in.)
Minimum outer diameter:
Part A:
24.885 mm (0.9797 in.)
Part B:
28.991 mm (1.1414 in.)
Part C:
30.985 mm (1.2198 in.)
Part D:
24.985 mm (0.9836 in.)

If the outer diameters are less than the minimums, replace the input shaft.

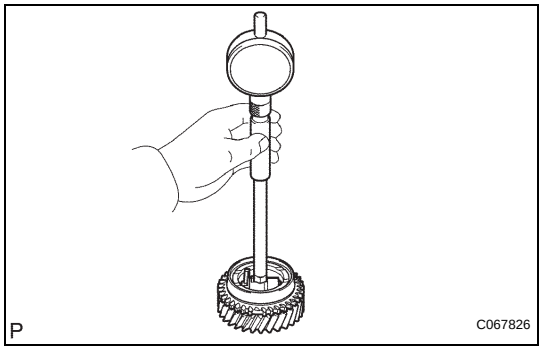

2. INSPECT 4TH GEAR

(a) Using a cylinder gauge, measure the inside diameter of the 4th gear.

Standard inside diameter:
34.015 to 34.031 mm (1.3391 to 1.3398 in.)
Maximum inside diameter:
34.031 mm (1.3398 in.)

If the inside diameter exceeds the maximum, replace the 4th gear.

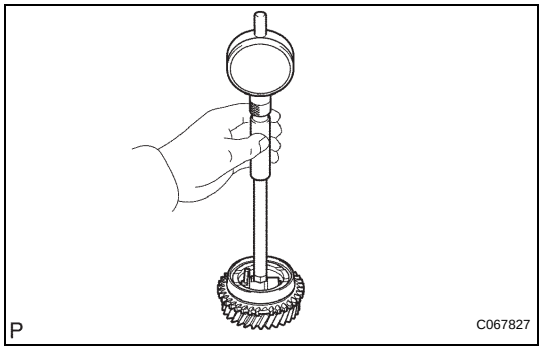

3. INSPECT 3RD GEAR

(a) Using a cylinder gauge, measure the inside diameter of the 3rd gear.

Standard inside diameter:
36.015 to 36.031 mm (1.4179 to 1.4185 in.)
Maximum inside diameter:
36.031 mm (1.4185 in.)

If the inside diameter exceeds the maximum, replace the 3rd gear.

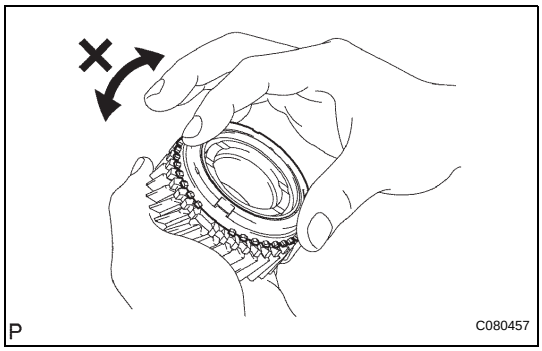

4. INSPECT 4TH GEAR SYNCHRONIZER RING

(a) Check for wear and damage.
(b) Coat the 4th gear cone with gear oil.
(c) Turn the synchronizer ring in one direction while pushing it against the 4th gear cone.
(d) Check that the ring locks.
If the synchronizer outer ring does not lock, replace the synchronizer ring.

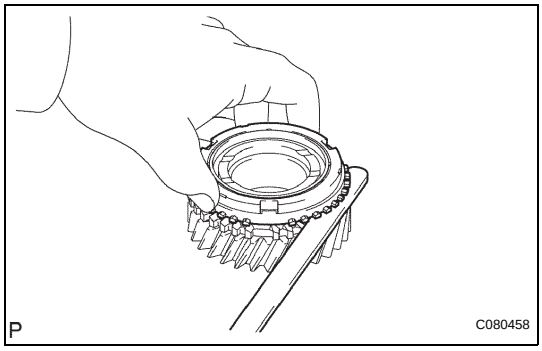

(e) Using a feeler gauge, measure the clearance between the synchronizer ring back and the gear spline end.
Standard clearance:
0.75 to 1.65 mm (0.0295 to 0.0649 in.)
Minimum clearance:
0.75 mm (0.0295 in.)
If the clearance is less than the minimum, replace the synchronizer ring.

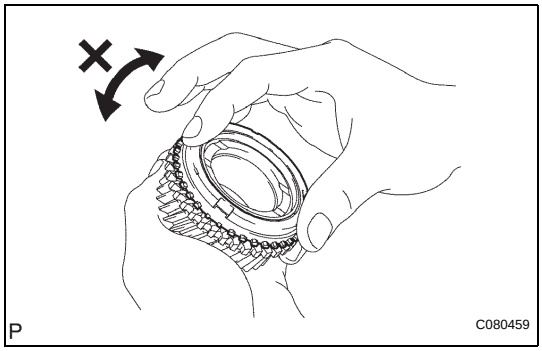

5. INSPECT 3RD GEAR SYNCHRONIZER RING

(a) Check for wear and damage.
(b) Coat the 3rd gear cone with gear oil.
(c) Turn the synchronizer ring in one direction while pushing it against the 3rd gear cone.
(d) Check that the ring locks.
If the synchronizer outer ring does not lock, replace the synchronizer ring.

MX

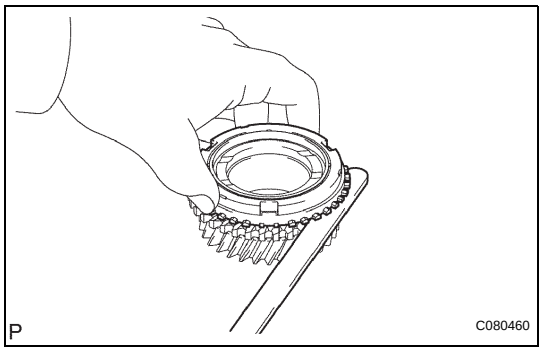

(e) Using a feeler gauge, measure the clearance between the synchronizer ring back and the gear spline end.
Standard clearance:
0.75 to 1.65 mm (0.0295 to 0.0650 in.)
Minimum clearance:
0.75 mm (0.0295 in.)
If the clearance is less than the minimum, replace the synchronizer ring.

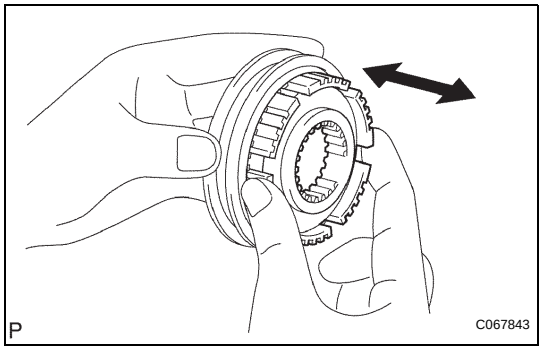

6. INSPECT TRANSMISSION HUB SLEEVE NO.2

(a) Check the sliding condition between transmission hub sleeve No. 2 and transmission clutch hub No. 2.
(b) Check that the edges of the transmission hub sleeve No. 2 spline gear are not worn down.

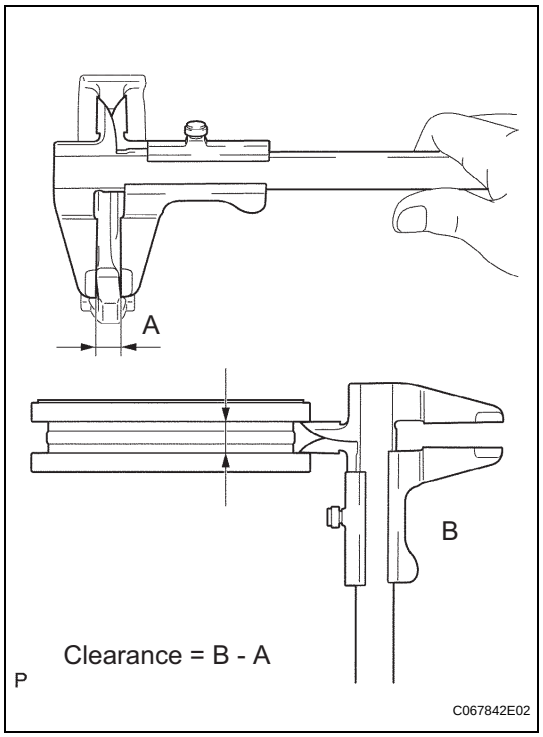

(c) Using vernier calipers, measure the width of the transmission hub sleeve No. 2 groove (B) and the thickness of the claw part on gear shift fork No. 2 (A), and calculate the clearance.
Standard clearance (B - A):
0.15 to 0.35 mm (0.0059 to 0.0137 in.)
If the clearance is outside the specifications, replace transmission hub sleeve No. 2 and gear shift fork No. 2.

REASSEMBLY

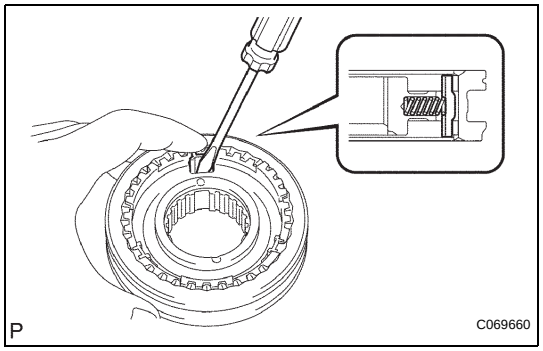

1. INSTALL TRANSMISSION HUB SLEEVE NO.2

(a) Coat transmission hub sleeve No. 2 with gear oil, and install it to transmission clutch hub No. 2.
NOTICE:
Orient the transmission hub sleeve No.2 and transmission clutch hub No.2 correctly.

(b) Using a screwdriver, install the 3 synchromesh key springs with 3 synchromesh shifting keys onto transmission clutch hub No. 2.

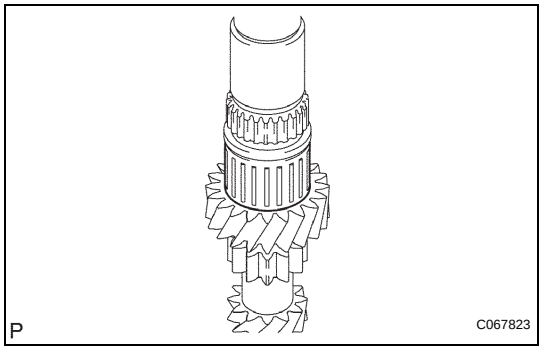

2. INSTALL 3RD GEAR NEEDLE ROLLER BEARING

(a) Coat the 3rd gear needle roller bearing with gear oil and install it onto the input shaft.

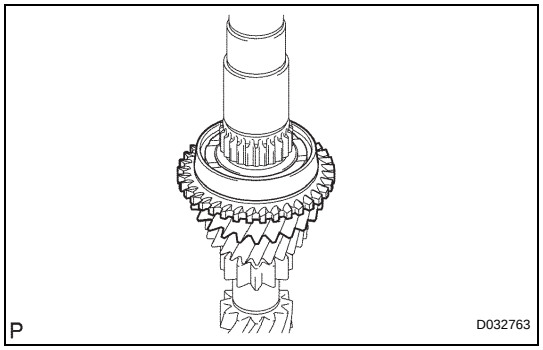

3. INSTALL 3RD GEAR

(a) Coat the 3rd gear with gear oil and install it onto the input shaft.

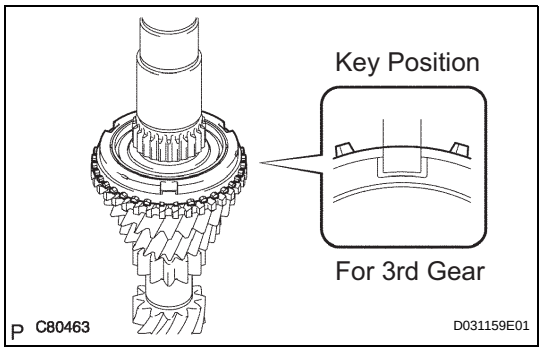

4. INSTALL 3RD GEAR SYNCHRONIZER RING

(a) Coat the 3rd gear synchronizer ring with gear oil and install it onto the 3rd gear.

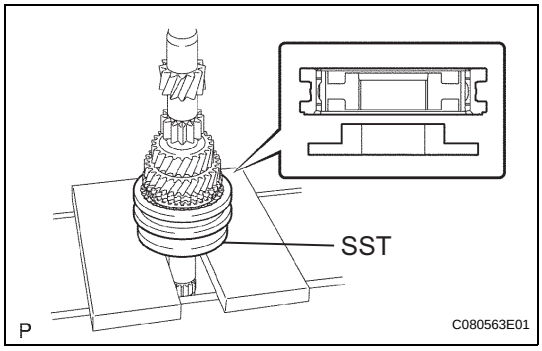

5. INSTALL TRANSMISSION CLUTCH HUB NO.2

(a) Using SST and a press, install transmission clutch hub No. 2 onto the input shaft.
SST 09316-60011 (09316-00021)
NOTICE:
Fit the synchromesh shifting key into the groove of the synchronizer ring correctly.

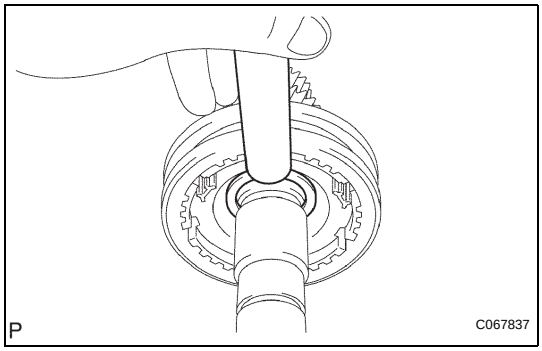

(b) Select a snap ring that will allow minimum axial play.
Standard clearance:
0.1 mm (0.0039 in.) or less.
Snap ring thickness

Mark	Thickness mm (in.)	Mark	Thickness mm (in.)
0	2.30 (0.0906)	3	2.48 (0.0976)
1	2.36 (0.0929)	4	2.54 (0.1000)
2	2.42 (0.0953)	5	2.60 (0.1024)

(c) Using a brass bar and a hammer, install the snap ring onto the input shaft.

MX

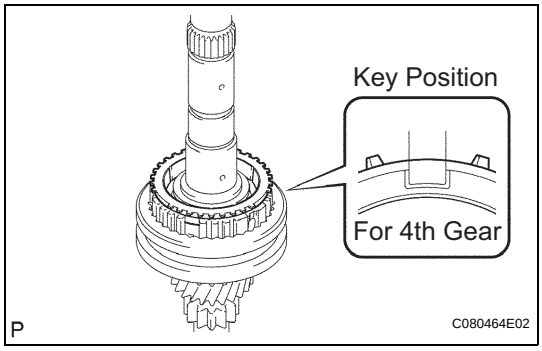

6. INSTALL 4TH GEAR SYNCHRONIZER RING

(a) Coat the 4th gear synchronizer ring with gear oil and install it onto transmission clutch hub No. 2.

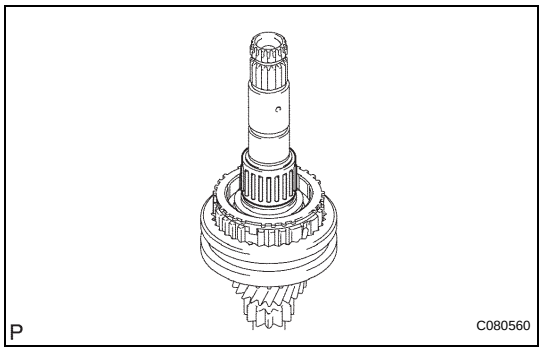

7. INSTALL 4TH GEAR NEEDLE ROLLER BEARING

(a) Coat the 4th gear needle roller bearing and 4th gear bearing spacer with gear oil and install them onto transmission clutch hub No. 2.

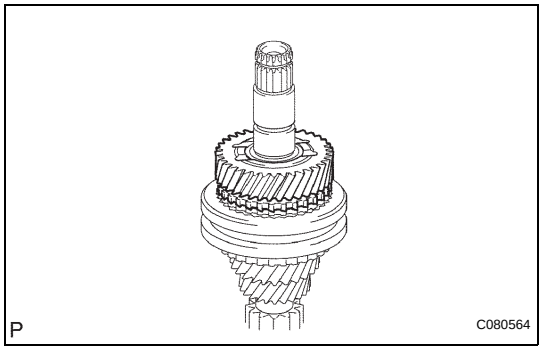

8. INSTALL 4TH GEAR

(a) Coat the 4th gear with gear oil and install it onto the input shaft.

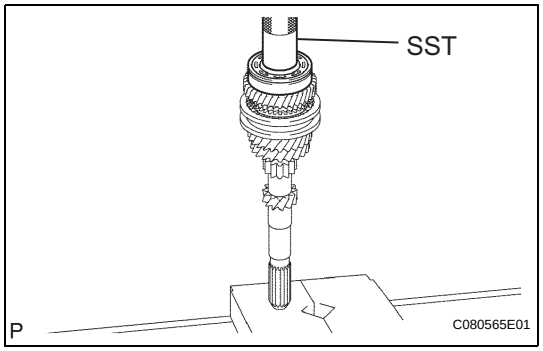

9. INSTALL INPUT SHAFT REAR RADIAL BALL BEARING

(a) Using SST and a press, install the input shaft rear radial ball bearing onto the input shaft.
SST 09608-04031

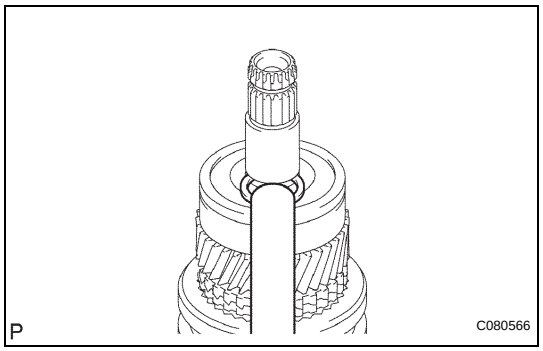

(b) Select a snap ring that will allow minimum axial play.
Standard clearance:
0.1 mm (0.0039 in.) or less
Snap ring thickness

Mark	Thickness mm (in.)	Mark	Thickness mm (in.)
A	2.29 (0.0901)	D	2.47 (0.0972)
B	2.35 (0.0925)	E	2.53 (0.0996)
C	2.41 (0.0948)	F	2.59 (0.1019)

(c) Using a brass bar and a hammer, install the snap ring onto the input shaft.
NOTICE:
Do not damage the journal surface of the snap ring.

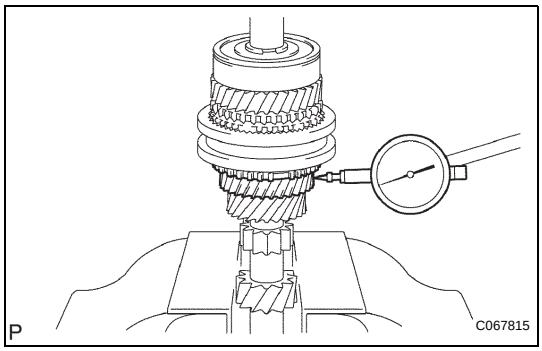

10. INSPECT 3RD GEAR RADIAL CLEARANCE

(a) Using a dial gauge, measure the 3rd gear radial clearance.

Standard clearance:
KOYO made:
0.015 to 0.058 mm (0.0006 to 0.0023 in.)
NSK made:
0.015 to 0.056 mm (0.0006 to 0.0022 in.)
Maximum clearance:
KOYO made:
0.058 mm (0.0023 in.)
NSK made:
0.056 mm (0.0022 in.)

If the clearance exceeds the maximum, replace the 3rd gear, 3rd gear needle roller bearing or input shaft.

11. INSPECT 4TH GEAR RADIAL CLEARANCE

(a) Using a dial gauge, measure the 4th gear radial clearance.

Standard clearance:
0.009 to 0.050 mm (0.0004 to 0.0020 in.)
Maximum clearance:
0.050 mm (0.0020 in.)

If the clearance exceeds the maximum, replace the 4th gear, 4th gear needle roller bearing or input shaft.

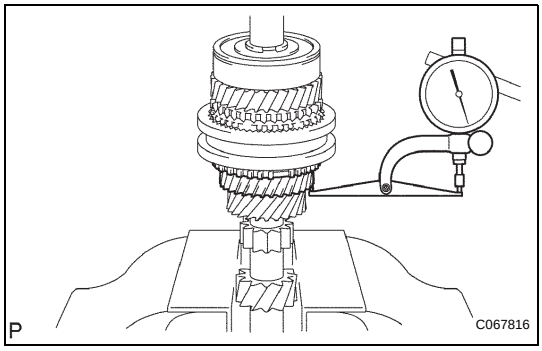

12. INSPECT 3RD GEAR THRUST CLEARANCE

(a) Using a dial gauge, measure the 3rd thrust clearance.

Standard clearance:
0.1 to 0.35 mm (0.0039 to 0.0138 in.)
Maximum clearance:
0.35 mm (0.0138 in.)

If the clearance exceeds the maximum, replace transmission clutch hub No. 2, the 3rd gear or input shaft.

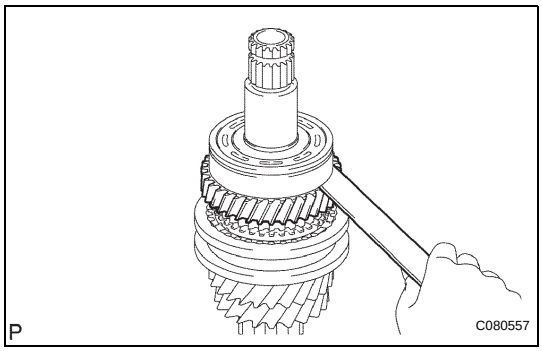

13. INSPECT 4TH GEAR THRUST CLEARANCE

(a) Using a feeler gauge, measure the 4th thrust clearance.

Standard clearance:
0.1 to 0.55 mm (0.0039 to 0.0217 in.)
Maximum clearance:
0.55 mm (0.0217 in.)

If the clearance exceeds the maximum, replace transmission clutch hub No. 2, the 4th gear or input shaft rear radial ball bearing.

OUTPUT SHAFT

COMPONENTS

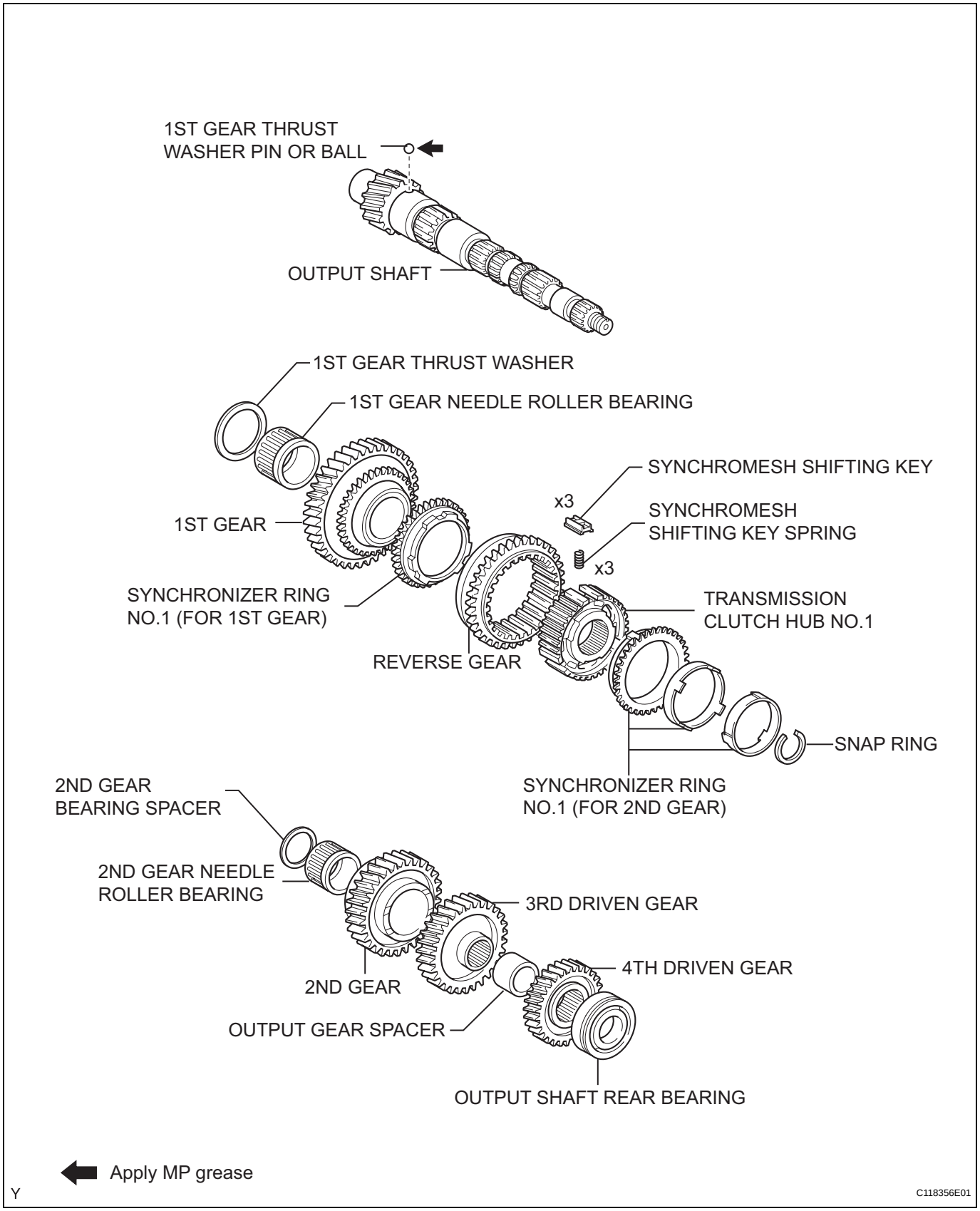

MX

DISASSEMBLY

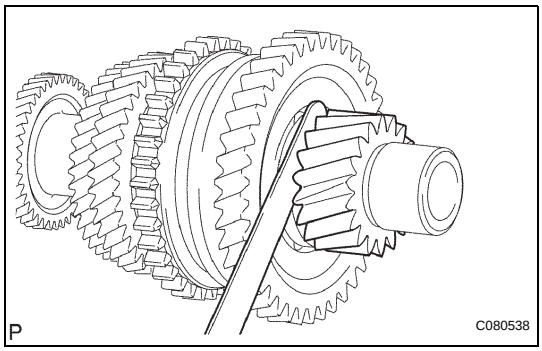

1. INSPECT 1ST GEAR THRUST CLEARANCE

(a) Using a feeler gauge, measure the 1st gear thrust clearance.

Standard clearance:
0.10 to 0.40 mm (0.0039 to 0.0157 in.)
Maximum clearance:
0.40 mm (0.0157 in.)

If the clearance exceeds the maximum, replace the 1st gear thrust washer, 1st gear or transmission clutch hub No. 1.

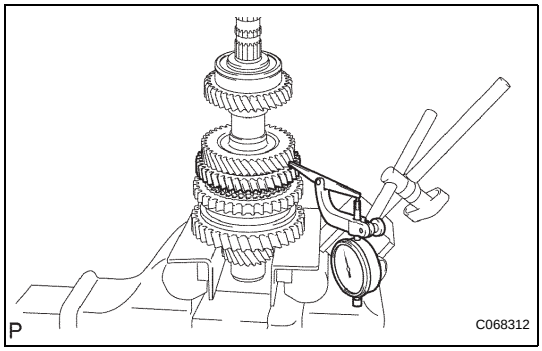

2. INSPECT 2ND GEAR THRUST CLEARANCE

(a) Using a dial gauge, measure the 2nd gear thrust clearance.

Standard clearance:
0.10 to 0.55 mm (0.0039 to 0.0217 in.)
Maximum clearance:
0.55 mm (0.0217 in.)

If the clearance exceeds the maximum, replace transmission clutch hub No. 1, 2nd gear or 3rd driven gear.

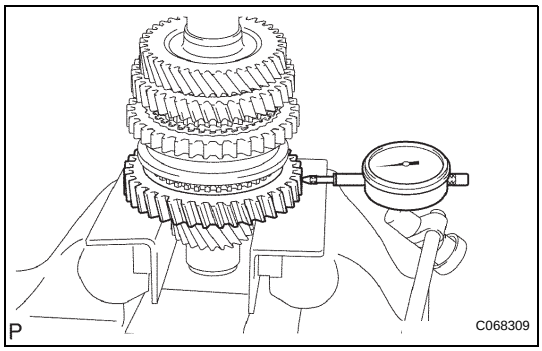

3. INSPECT 1ST GEAR RADIAL CLEARANCE

(a) Using a dial gauge, measure the 1st gear radial clearance between the gear and shaft.

Standard clearance:
KOYO made bearing:
0.015 to 0.058 mm (0.0006 to 0.0023 in.)
NSK made bearing:
0.015 to 0.056 mm (0.0006 to 0.0022 in.)
Maximum clearance:
KOYO made:
0.058 mm (0.0023 in.)
NSK made:
0.056 mm (0.0022 in.)

If the clearance exceeds the maximum, replace the 1st gear or 1st gear needle roller bearing.

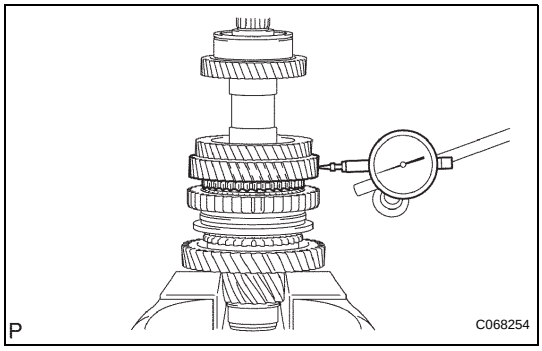

4. INSPECT 2ND GEAR RADIAL CLEARANCE

(a) Using a dial gauge, measure the 2nd gear radial clearance between the gear and shaft.

Standard clearance:
KOYO made:
0.015 to 0.058 mm (0.0006 to 0.0023 in.)
NSK made:
0.015 to 0.056 mm (0.0006 to 0.0022 in.)
Maximum clearance:
KOYO made:
0.058 mm (0.0023 in.)
NSK made:
0.056 mm (0.0022 in.)

If the clearance exceeds the maximum, replace the 2nd gear or 2nd gear needle roller bearing.

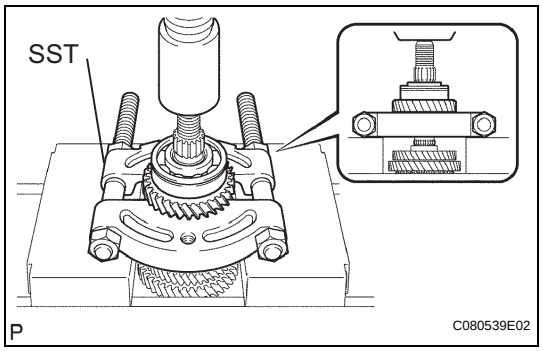

5. REMOVE 4TH DRIVEN GEAR

(a) Using SST and a press, remove the output shaft rear bearing and 4th driven gear from the output shaft.
SST 09950-00020

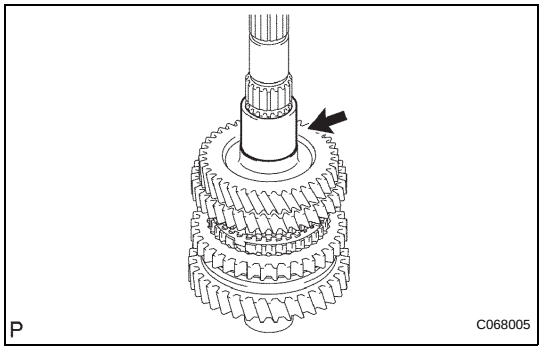

6. REMOVE OUTPUT GEAR SPACER

(a) Remove the output gear spacer from the output shaft.

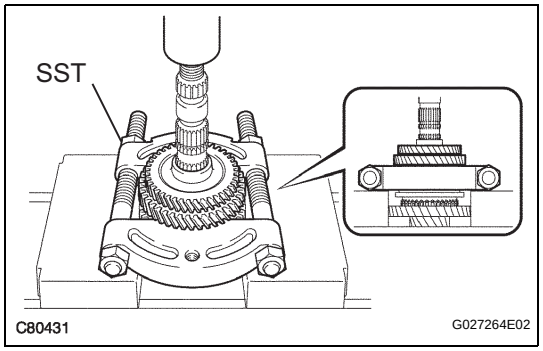

7. REMOVE 2ND GEAR

(a) Using SST and a press, remove the 3rd driven gear with 2nd gear from the output shaft.
SST 09950-00020

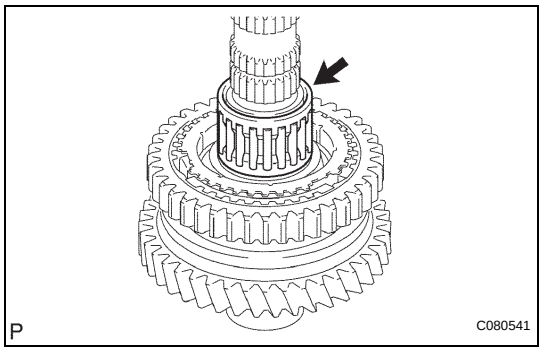

8. REMOVE 2ND GEAR NEEDLE ROLLER BEARING

(a) Remove the 2nd gear needle roller bearing and 2nd gear bearing spacer from the output shaft.

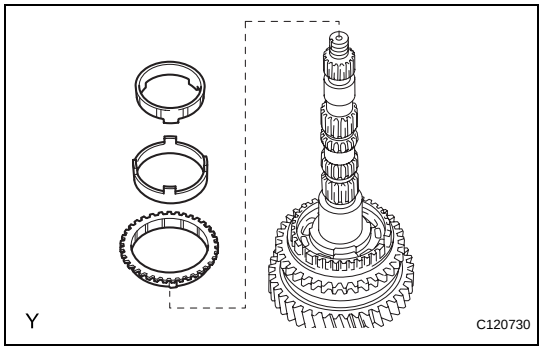

9. REMOVE SYNCHRONIZER RING NO.1 (FOR 2ND GEAR)

(a) Remove synchronizer ring No. 1 from the output shaft.

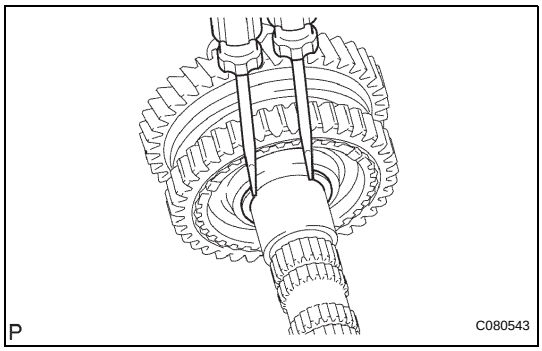

10. REMOVE 1ST GEAR

(a) Using 2 screwdrivers and a hammer, remove the clutch hub No. 1 shaft snap ring from the output shaft.
HINT:
Use a shop rag or piece of cloth to keep the shaft snap ring from flying off.

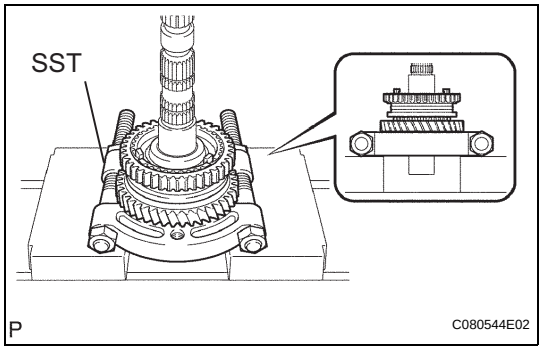

(b) Using SST and a press, remove the clutch hub No. 1 assembly and 1st gear from the output shaft.
SST 09950-00020
NOTICE:
- **Do not tighten SST excessively.**
- **Support the input shaft by hand to prevent it from dropping off.**

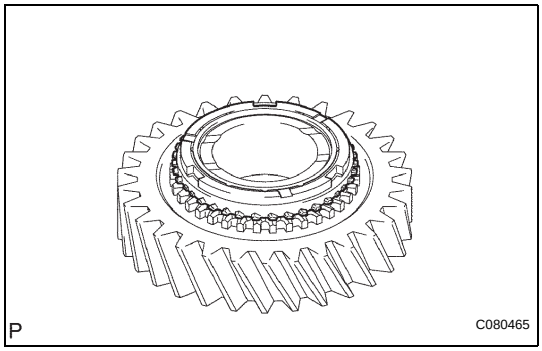

11. REMOVE SYNCHRONIZER RING GEAR NO.1 (FOR 1ST GEAR)

(a) Remove synchronizer ring No. 1 from the 1st gear.

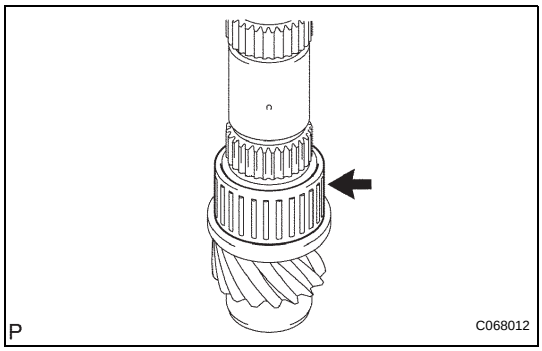

12. REMOVE 1ST GEAR NEEDLE ROLLER BEARING

(a) Remove the 1st gear needle roller bearing from the output shaft.

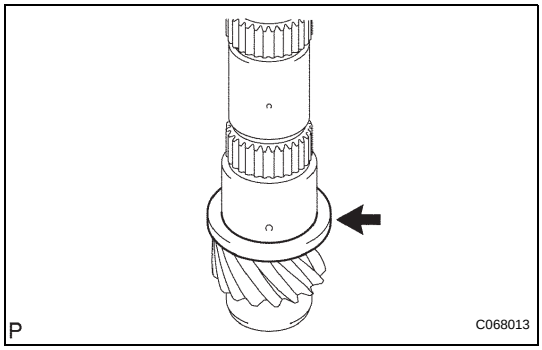

13. REMOVE 1ST GEAR THRUST WASHER

(a) Remove the 1st gear thrust washer from the output shaft.

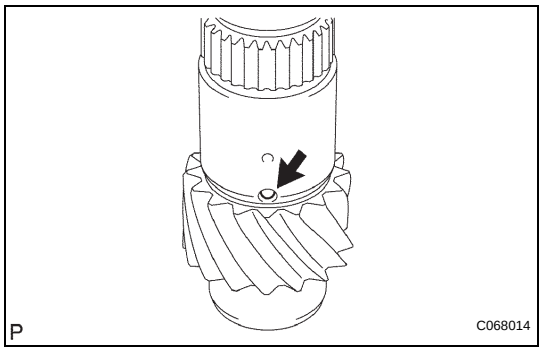

14. REMOVE 1ST GEAR THRUST WASHER PIN OR BALL

(a) Remove the 1st gear thrust washer pin or ball from the output shaft.

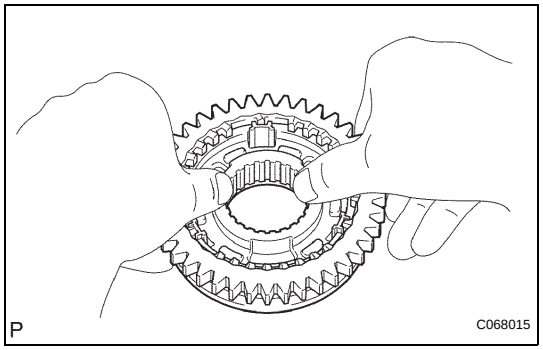

15. REMOVE REVERSE GEAR

(a) Remove the reverse gear, 3 synchromesh shifting keys and 3 synchromesh shifting key springs from transmission clutch hub No. 1.
NOTICE:
Use a shop rag or piece of cloth to keep the shifting key and shifting key spring from flying off.

INSPECTION

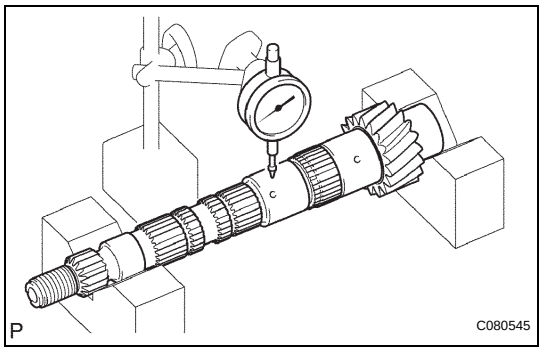

1. INSPECT OUTPUT SHAFT

(a) Using a dial gauge and 2 V-blocks, check the output shaft runout.
Maximum runout:
0.015 mm (0.0006 in.)
If the runout exceeds the maximum, replace the output shaft.

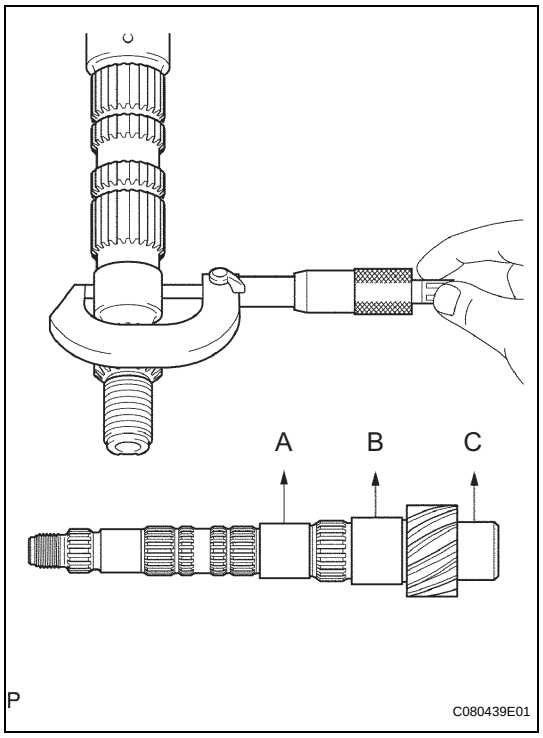

(b) Using a micrometer, measure the outer diameter of the output shaft journal surface, at the locations indicated.
Standard outer diameter:
Part A:
31.985 to 32.000 mm (1.2592 to 1.2598 in.)
Part B:
37.985 to 38.000 mm (1.4955 to 1.4961 in.)
Part C:
32.985 to 33.000 mm (1.2986 to 1.2992 in.)
If the outer diameters are less than the minimums, replace the output shaft.

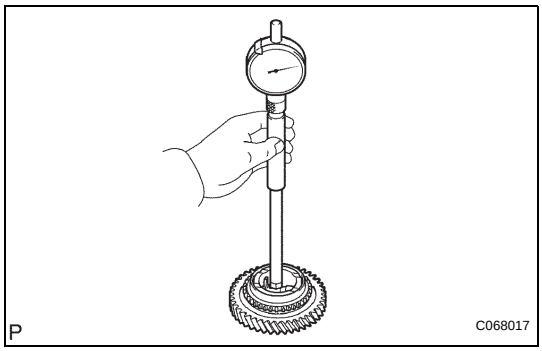

2. INSPECT 2ND GEAR

(a) Using a cylinder gauge, measure the inside diameter of the 2nd gear.
Standard inside diameter:
38.015 to 38.031 mm (1.4967 to 1.4972 in.)
Maximum inside diameter:
38.031 mm (1.4972 in.)
If the inside diameter exceeds the maximum, replace the 1st gear.

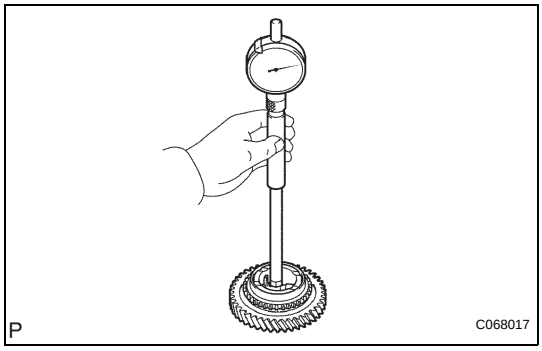

3. INSPECT 1ST GEAR

(a) Using a cylinder gauge, measure the inside diameter of the 1st gear.
Standard inside diameter:
44.015 to 44.031 mm (1.7328 to 1.7335 in.)
Maximum inside diameter:
44.031 mm (1.7335 in.)
If the inside diameter exceeds the maximum, replace the 1st gear.

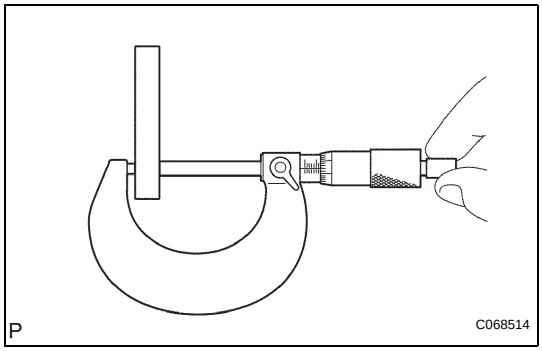

4. INSPECT 1ST GEAR THRUST WASHER

(a) Using a micrometer, measure the 1st gear thrust washer.
Standard thickness:
5.975 to 6.025 mm (0.2352 to 0.2372 in.)
Minimum thickness:
5.975 mm (0.2352 in.)
If the thickness is less than the minimum, replace the 1st gear thrust washer.

MX

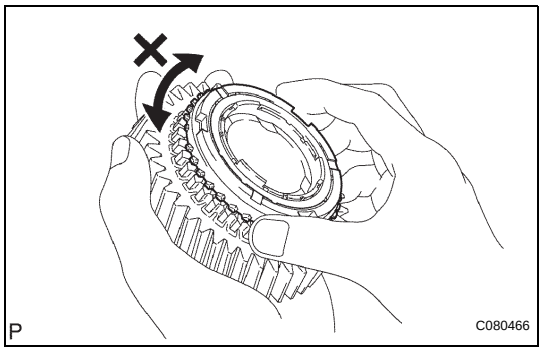

5. INSPECT SYNCHRONIZER RING NO.1 (FOR 2ND GEAR)

(a) Check for wear and damage.
(b) Coat the 2nd gear cone with gear oil.
(c) Turn the synchronizer ring in one direction while pushing it against the 2nd gear cone.
(d) Check that the ring locks.
If the synchronizer ring does not lock, replace the synchronizer ring.

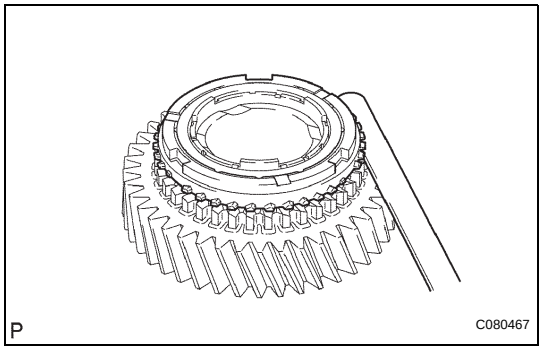

(e) Using a feeler gauge, measure the clearance between the synchronizer ring back and the gear spline end.
Standard clearance:
0.70 to 1.3 mm (0.0276 to 0.0512 in.)
Minimum clearance:
0.70 mm (0.0276 in.)
If the clearance is less than the minimum, replace the synchronizer ring.

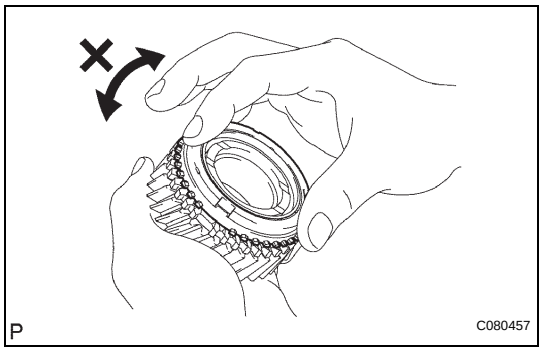

6. INSPECT SYNCHRONIZER RING NO.1 (FOR 1ST GEAR)

(a) Check for wear and damage.
(b) Coat the 1st gear cone with gear oil.
(c) Turn the synchronizer ring in one direction while pushing it against the 1st gear cone.
(d) Check that the ring locks.
If the synchronizer ring does not lock, replace the synchronizer ring.

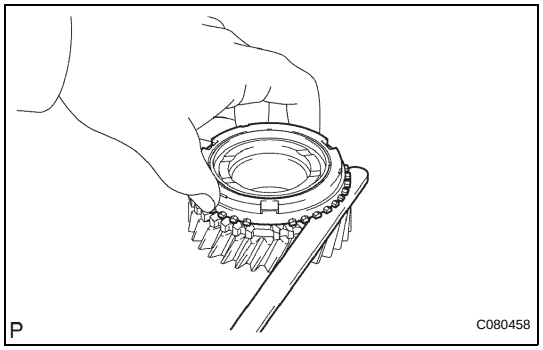

(e) Using a feeler gauge, measure the clearance between the synchronizer ring back and the gear spline end.
Standard clearance:
0.75 to 1.65 mm (0.0295 to 0.0650 in.)
Minimum clearance:
0.75 mm (0.0295 in.)
If the clearance is less than the minimum, replace the synchronizer ring.

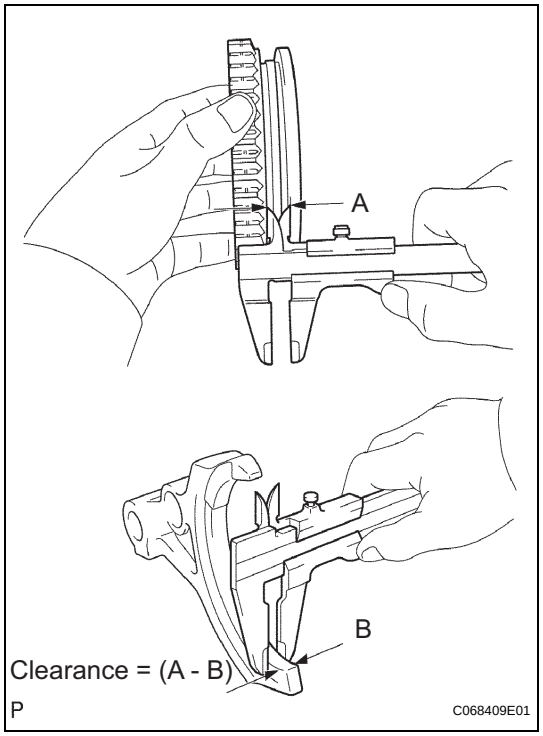

7. INSPECT REVERSE GEAR

(a) Using a vernier calipers, measure the width of the reverse gear groove (A) and the thickness of the claw part on the reverse shift fork (B), and calculate the clearance.
Standard clearance (A - B):
0.15 to 0.35 mm (0.0059 to 0.0138 in.)
If the clearance is outside the specifications, replace the reverse gear and reverse shift fork.

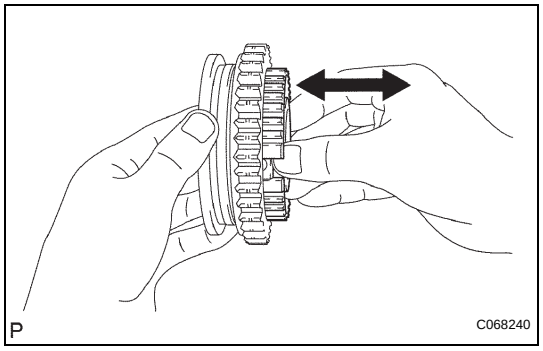

8. INSPECT TRANSMISSION CLUTCH HUB NO.1

(a) Check that transmission clutch hub No. 1 and the reverse gear slide smoothly.
(b) Check that the edges of the reverse gear spline gear are not worn down.

REASSEMBLY

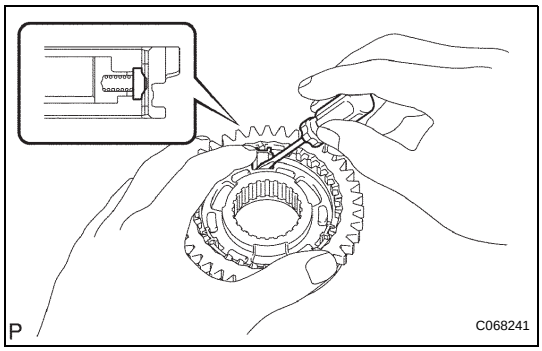

1. INSTALL REVERSE GEAR

(a) Coat the reverse gear with gear oil and install it onto transmission clutch hob No. 1.
NOTICE:
Orient the reverse gear and transmission clutch hub No. 1 correctly.

(b) Install the 3 synchromesh shifting key springs and 3 synchromesh keys onto transmission clutch hub No. 1.

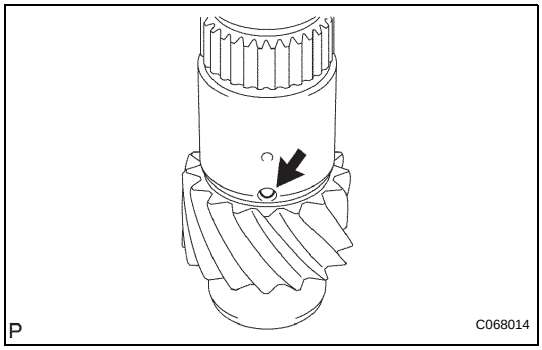

2. INSTALL 1ST GEAR THRUST WASHER PIN OR BALL

(a) Coat the 1st gear thrust washer pin or ball with MP grease, and install it onto the output shaft.

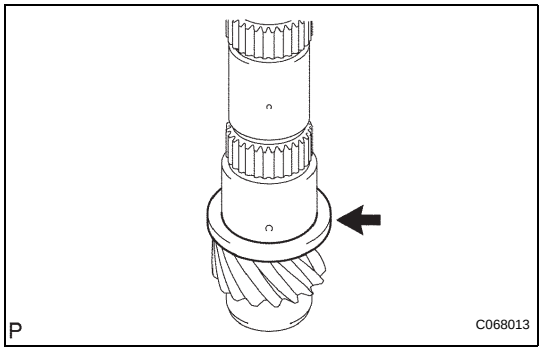

3. INSTALL 1ST GEAR THRUST WASHER

(a) Coat the 1st gear thrust washer with gear oil and install it onto the output shaft.

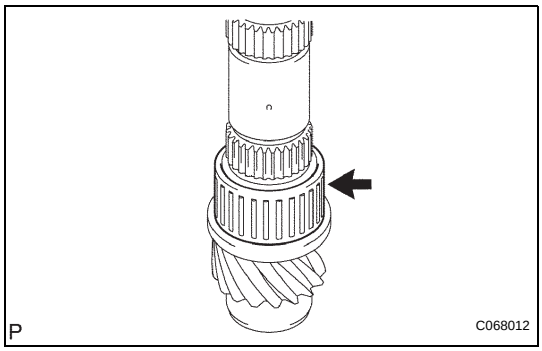

4. INSTALL 1ST GEAR NEEDLE ROLLER BEARING

(a) Coat the 1st gear needle roller bearing with gear oil and install it onto the output shaft.

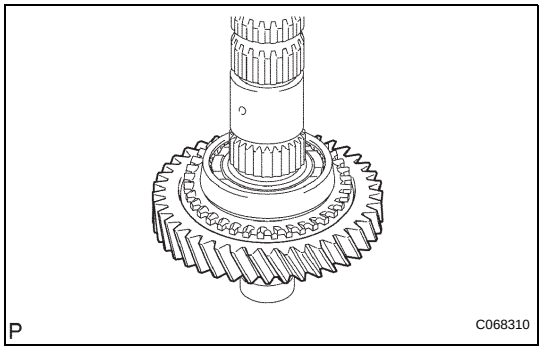

5. INSTALL 1ST GEAR

(a) Coat the 1st gear with gear oil and install it onto the output shaft.

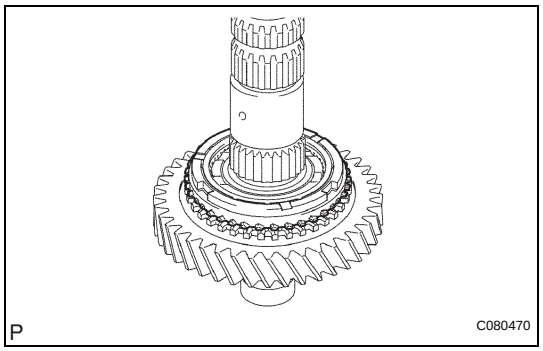

6. INSTALL SYNCHRONIZER RING NO.1 (FOR 1ST GEAR)

(a) Coat synchronizer ring No. 1 with gear oil and install it onto the 1st gear.

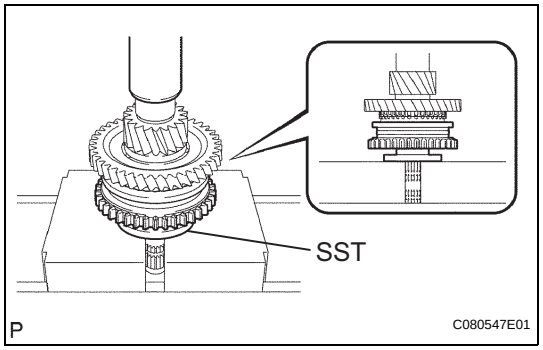

7. INSTALL TRANSMISSION CLUTCH HUB NO.1

(a) Using SST and a press, install transmission clutch hub No. 1 onto the output shaft.
SST 09316-60011 (09316-00031)
HINT:
- The 1st gear can be turned.
- While checking that the 1st gear thrust washer pin or ball is inserted into the groove of the 1st gear thrust washer, press and fit the clutch hub No. 1.

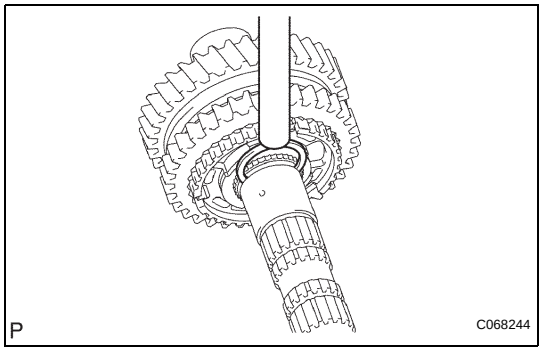

(b) Select a snap ring that will allow minimum axial play.
Standard clearance:
0.1 mm (0.039 in.) or less
Snap ring thickness

Mark	Thickness mm (in.)	Mark	Thickness mm (in.)
A	2.50 (0.0984)	D	2.68 (0.1055)
B	2.56 (0.1008)	E	2.74 (0.1079)
C	2.62 (0.1031)	F	2.80 (0.1102)

(c) Using a brass bar and a hammer, install the snap ring onto the output shaft.
NOTICE:
Do not damage the journal surface of the output shaft.

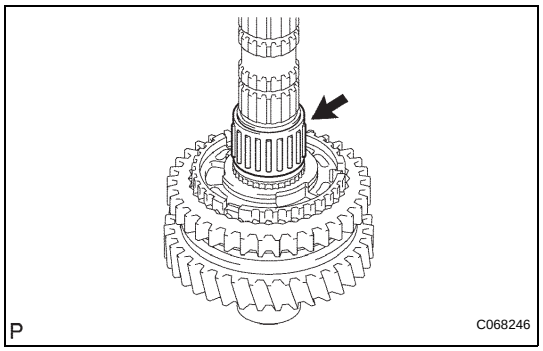

8. INSTALL 2ND GEAR NEEDLE ROLLER BEARING

(a) Coat the 2nd gear needle roller bearing and 2nd gear bearing spacer with gear oil, and install them onto the output shaft.

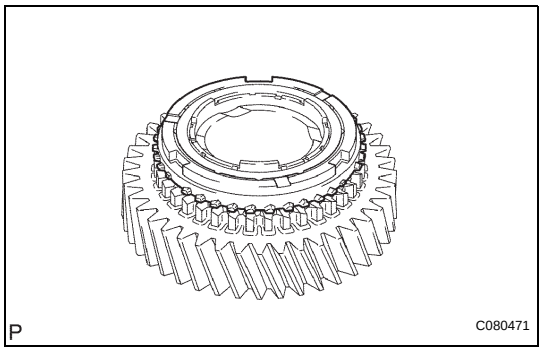

9. INSTALL SYNCHRONIZER RING NO.1 (FOR 2ND GEAR)

(a) Coat synchronizer ring No. 1 with gear oil and install it onto the 2nd gear.

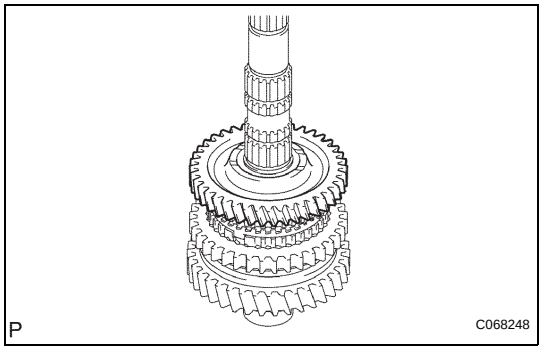

10. INSTALL 2ND GEAR

(a) Coat the 2nd gear with gear oil and install it onto the output shaft.

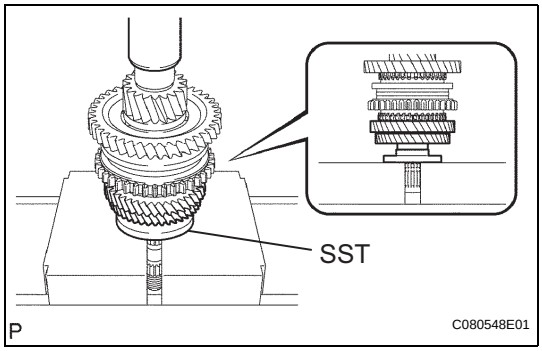

11. INSTALL 3RD DRIVEN GEAR

(a) Using SST and a press, install the 3rd driven gear onto the output shaft.
SST 09316-60011 (09316-00031)

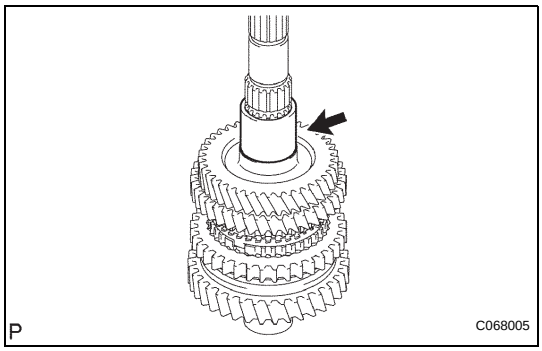

12. INSTALL OUTPUT GEAR SPACER

(a) Install the output gear spacer onto the output shaft.

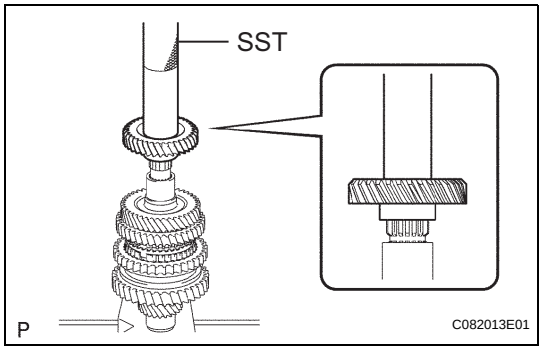

13. INSTALL 4TH DRIVEN GEAR

(a) Using SST and a press, install the 4th driven gear onto the output shaft.
SST 09612-22011

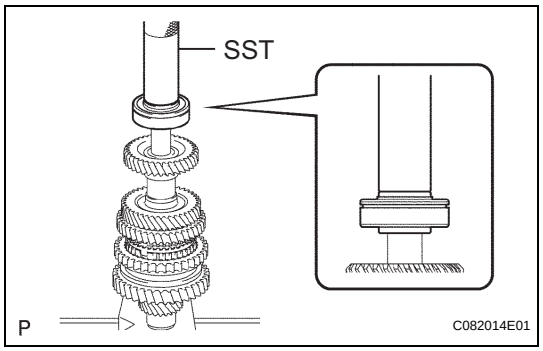

14. INSTALL OUTPUT SHAFT REAR BEARING

(a) Using SST and a press, install the output shaft rear bearing onto the output shaft.
SST 09612-22011

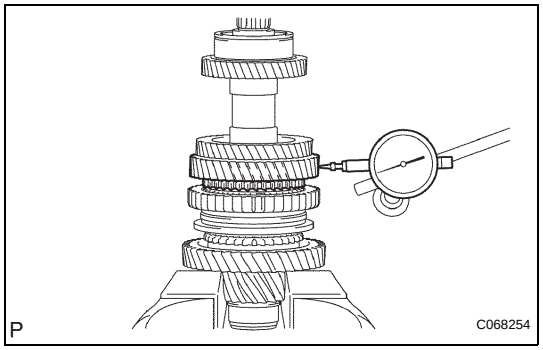

15. INSPECT 2ND GEAR RADIAL CLEARANCE

(a) Using a dial gauge, measure the 2nd gear radial clearance between the gear and shaft.
Standard clearance:
KOYO made:
0.015 to 0.058 mm (0.0006 to 0.00023 in.)
NSK made:
0.015 to 0.056 mm (0.0006 to 0.0022 in.)
Maximum clearance:
KOYO made:
0.058 mm (0.0023 in.)
NSK made:
0.056 mm (0.0022 in.)
If the clearance exceeds the maximum, replace the 2nd gear or 2nd gear needle roller bearing.

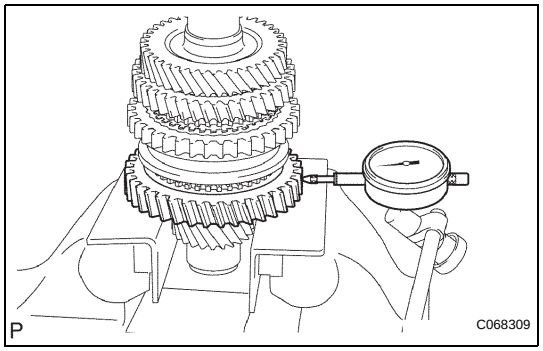

16. INSPECT 1ST GEAR RADIAL CLEARANCE

(a) Using a dial gauge, measure the 1st gear radial clearance between the gear and shaft.
Standard clearance:
KOYO made:
0.015 to 0.058 mm (0.0006 to 0.00023 in.)
NSK made:
0.015 to 0.056 mm (0.0006 to 0.0022 in.)
Maximum clearance:
KOYO made:
0.058 mm (0.0023 in.)
NSK made:
0.056 mm (0.0022 in.)
If the clearance exceeds the maximum, replace the 1st gear or 1st gear needle roller bearing.

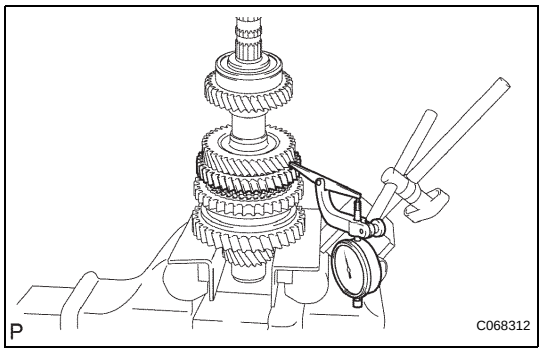

17. INSPECT 2ND GEAR THRUST CLEARANCE

(a) Using a dial gauge, measure the 2nd gear thrust clearance.
Standard clearance:
0.10 to 0.55 mm (0.0039 to 0.0217 in.)
Maximum clearance:
0.55 mm (0.0217 in.)
If the clearance exceeds the maximum, replace transmission clutch hub No. 1, the 2nd gear or 3rd driven gear.

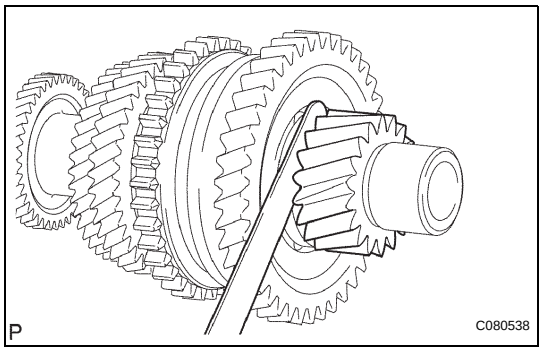

18. INSPECT 1ST GEAR THRUST CLEARANCE

(a) Using a feeler gauge, measure the 1st gear thrust clearance.

Standard clearance:
0.10 to 0.40 mm (0.0039 to 0.0157 in.)

Maximum clearance:
0.40 mm (0.0157 in.)

If the clearance exceeds the maximum, replace the 1st gear thrust washer, 1st gear or transmission clutch hub No. 1.

SHIFT AND SELECT LEVER SHAFT

COMPONENTS

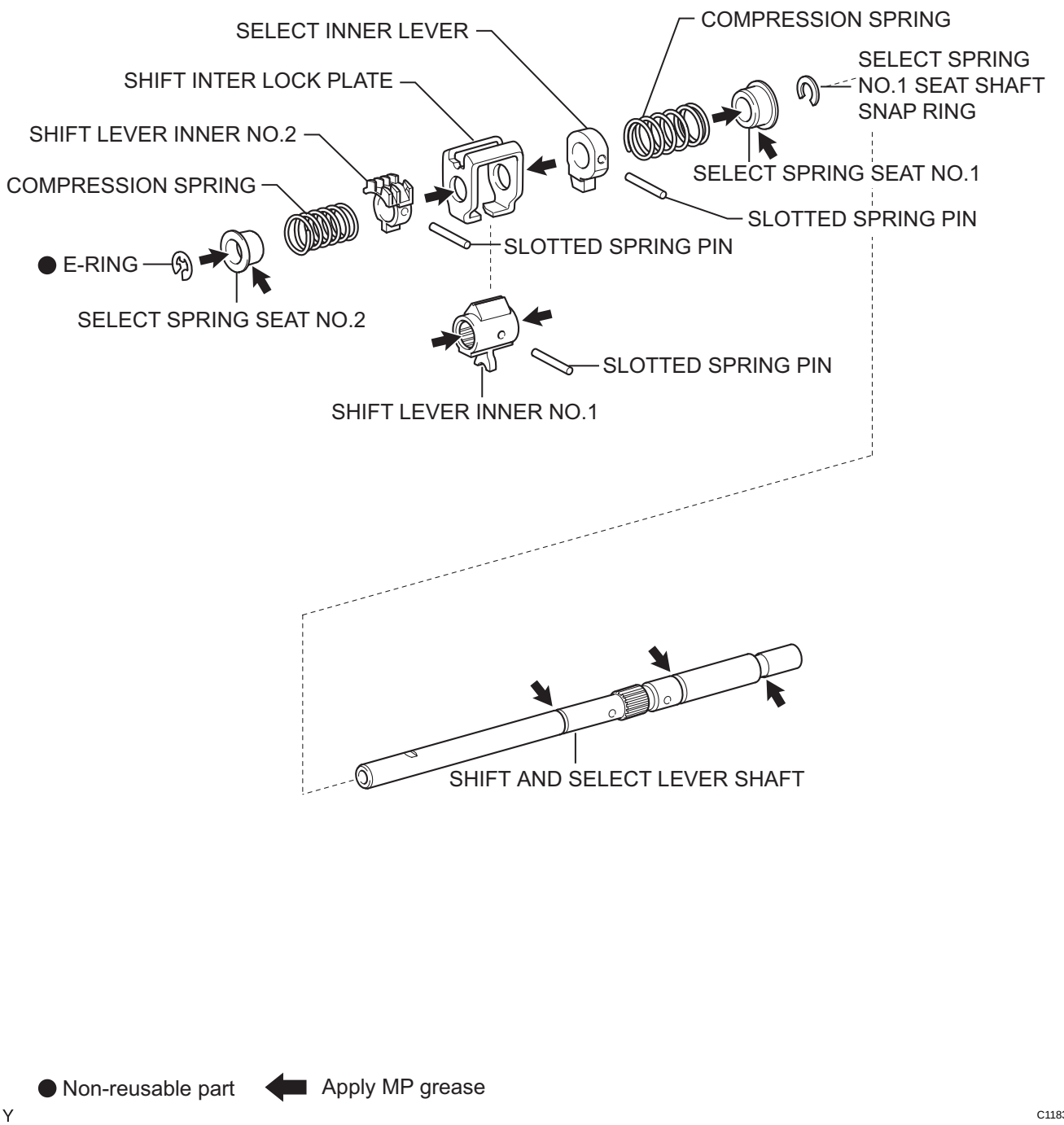

● Non-reusable part ⬅ Apply MP grease

Y

C118357E01

MX

DISASSEMBLY

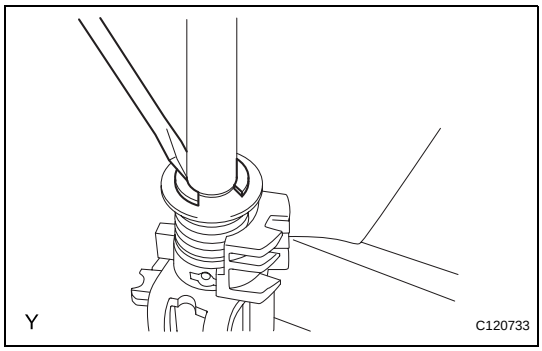

1. REMOVE SELECT SPRING SEAT NO.2

(a) Using a screwdriver, remove the select spring No. 2 seat E-ring, select spring seat No. 2 and select return compression spring No. 2 from the shift and select lever shaft.

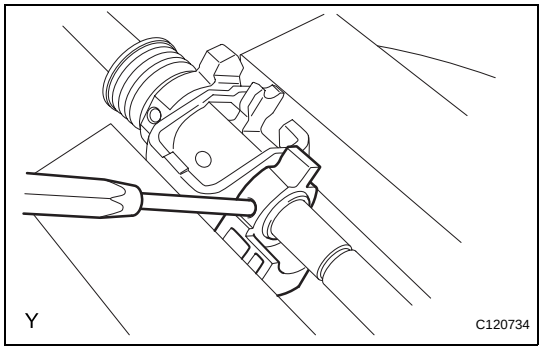

2. REMOVE SHIFT LEVER INNER NO.2

(a) Using a pin punch (ϕ5 mm) and a hammer, remove the shift inner lever slotted spring pin and shift lever inner No. 2 from the shift and select lever shaft.
HINT:
Check the orientation of shift lever inner No. 2.

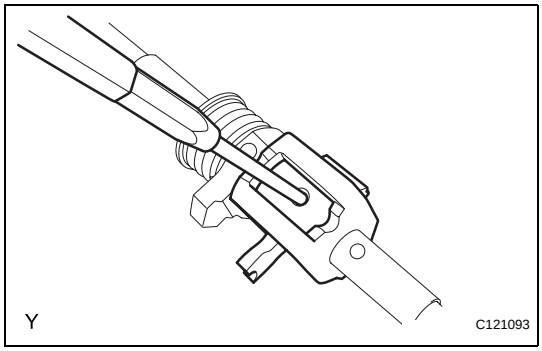

3. REMOVE SHIFT LEVER INNER NO.1

(a) Using a pin punch (ϕ5 mm) and a hammer, remove the shift inner lever slotted spring pin, shift lever inner No. 1 and shift inter lock plate from the shift and select lever shaft.
HINT:
Check the orientation of shift lever inner No. 1.

MX

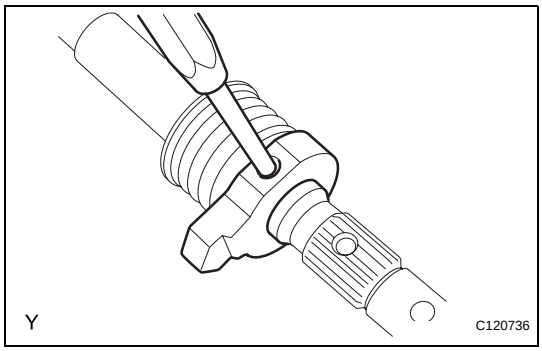

4. REMOVE SELECT INNER LEVER

(a) Using a pin punch (ϕ5 mm) and a hammer, remove the select inner lever slotted spring pin, select inner lever, select return compression spring No. 1 and select spring seat No. 1 from shift and select lever shaft.
HINT:
Check the orientation of the select inner lever.

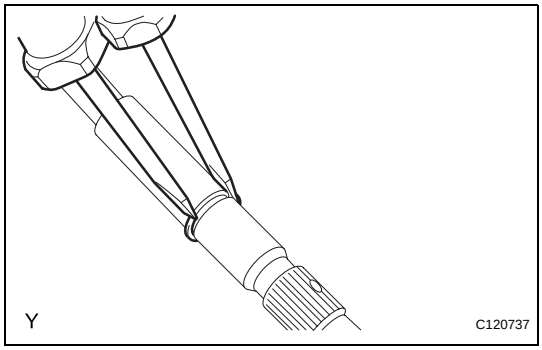

5. REMOVE SELECT SPRING NO.1 SEAT SHAFT SNAP RING

(a) Using 2 screwdrivers and a hammer, remove the select spring No. 1 seat shaft snap ring.

REASSEMBLY

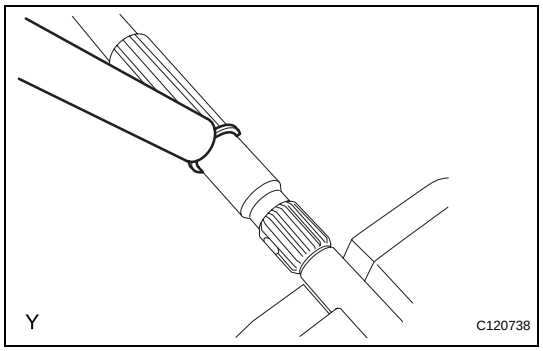

1. INSTALL SELECT SPRING NO.1 SEAT SHAFT SNAP RING

(a) Coat the shift and select lever shaft with MP grease, and install a snap ring onto the shift and select lever shaft using a brass bar and a hammer.

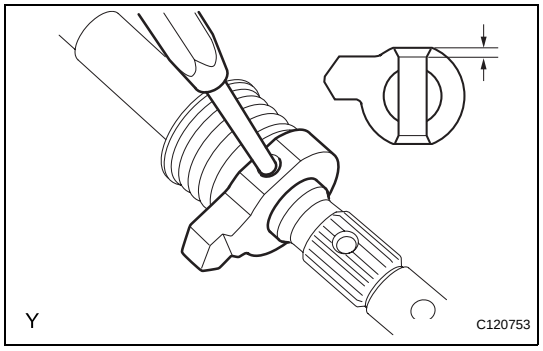

2. INSTALL SELECT INNER LEVER

(a) Coat select spring seat No. 1 with MP grease.

(b) Using a pin punch (ϕ5 mm) and a hammer, install select spring seat No. 1, select return compression spring No. 1, the select inner lever and select inner lever slotted spring pin onto the shift and select lever.

Drive in depth:
3.0 to 4.0 mm (0.1181 to 0.1575 in)

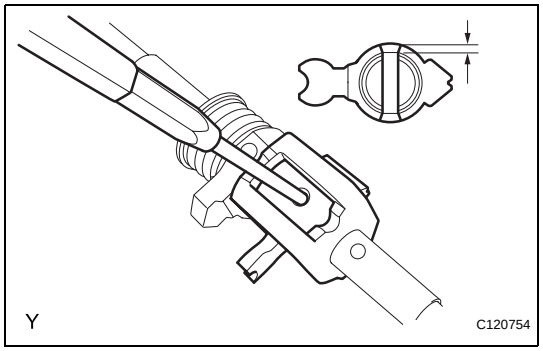

3. INSTALL SHIFT LEVER INNER NO.1

(a) Coat the shift inter lock plate and shift lever inner No. 1 with MP grease.

(b) Using a pin punch (ϕ5 mm) and a hammer, install the shift inter lock plate, shift lever inner No. 1 and shift inner lever slotted spring pin onto the shift and select lever shaft.

Drive in depth:
-0.5 to 0.5 mm (-0.0197 to 0.0197 in.)

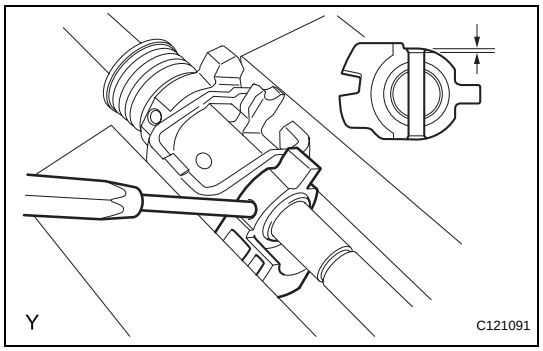

4. INSTALL SHIFT LEVER INNER NO.2

(a) Coat shift lever inner No. 2 with MP grease.

(b) Using a pin punch (ϕ5 mm) and a hammer, install shift lever inner No. 2 and shift inner lever slotted spring pin onto the shift and select lever shaft.

Drive in depth:
1.0 to 2.0 mm (0.0394 to 0.0787 in.)

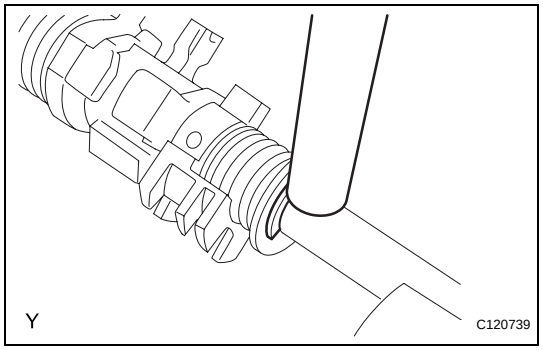

5. INSTALL SELECT SPRING SEAT NO.2

(a) Coat select spring seat No. 2 with MP grease.

(b) Install select spring seat No. 2 and select return compression spring No. 2. Using pliers, install a new select spring seat No. 2 E-ring onto the shift and select lever shaft.

DIFFERENTIAL CASE

COMPONENTS

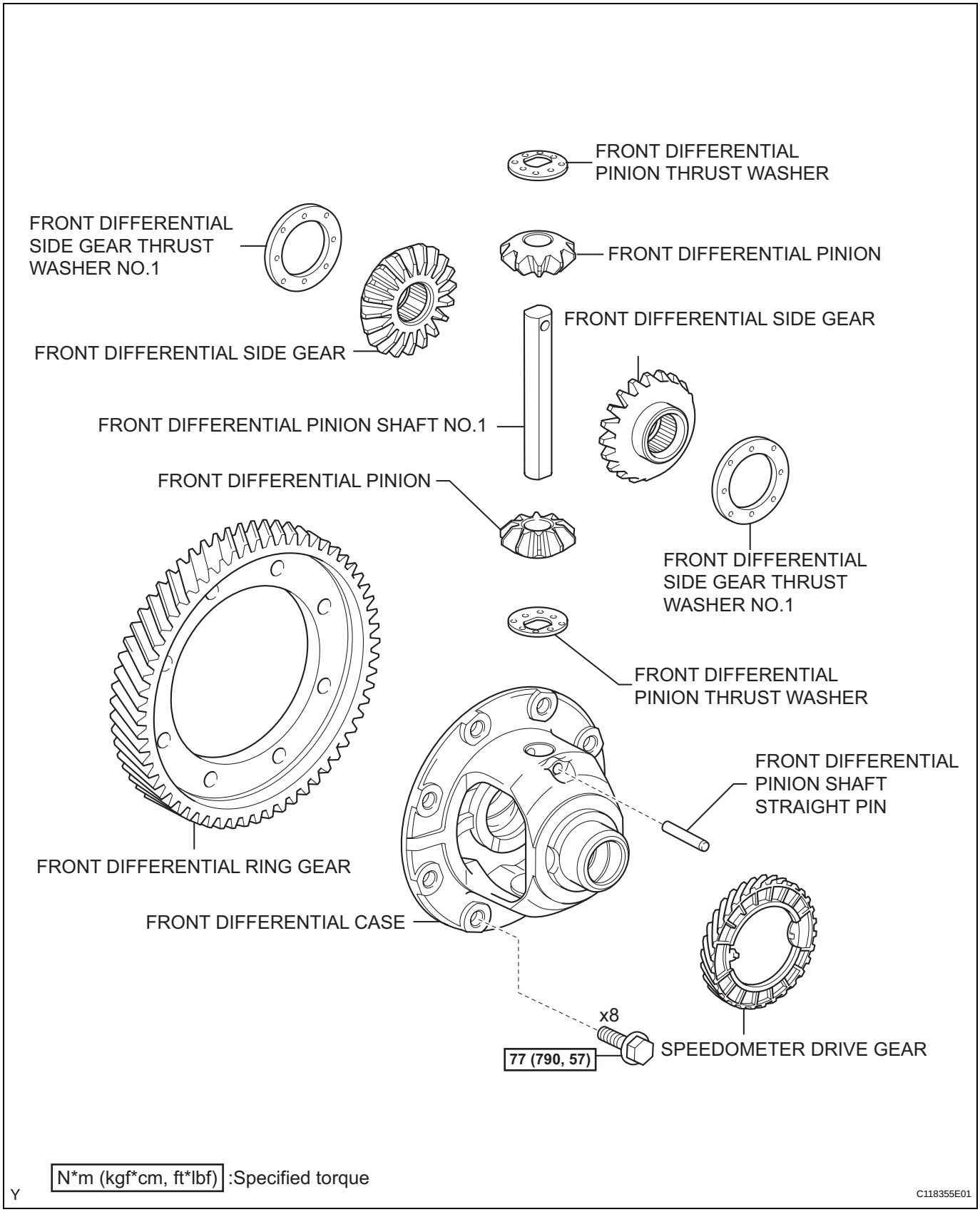

MX

DISASSEMBLY

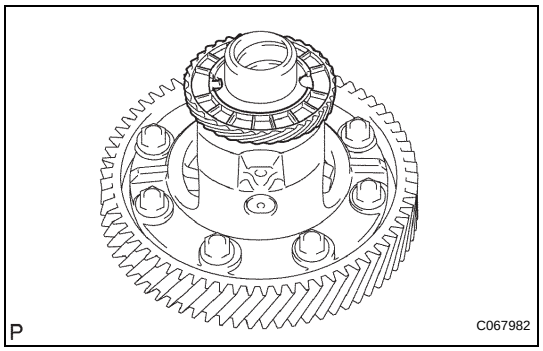

1. REMOVE SPEEDOMETER DRIVE GEAR

(a) Remove the speedometer drive gear from the front differential case.

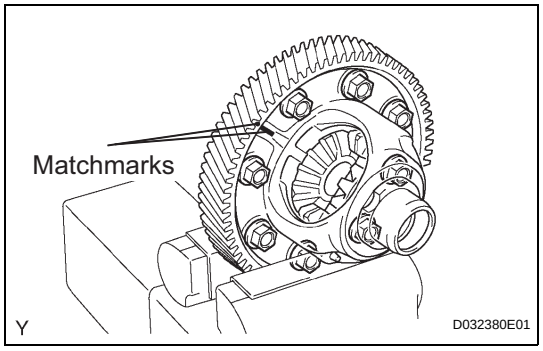

2. REMOVE FRONT DIFFERENTIAL RING GEAR

(a) Place matchmarks on the front differential ring gear and the front differential case.

(b) Remove the 8 bolts.

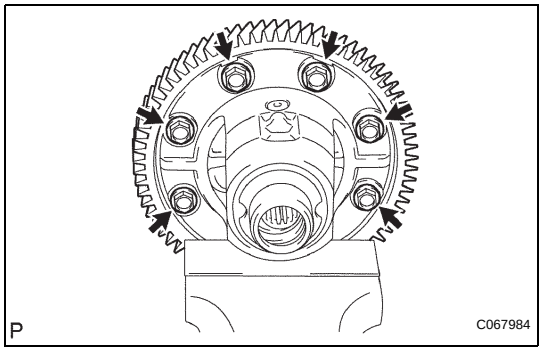

(c) Using a plastic hammer, remove the front differential ring gear from the front differential case.

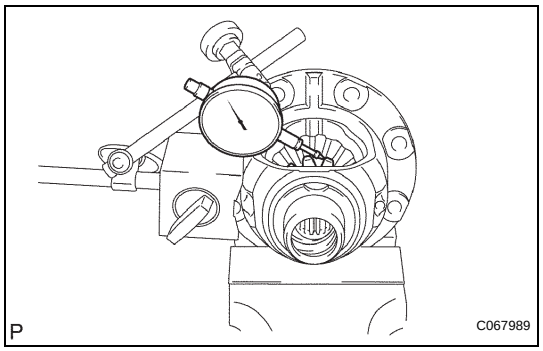

3. INSPECT FRONT DIFFERENTIAL SIDE GEAR BACKLASH

(a) Fix the front differential pinion to the front differential case side. Using a dial indicator, measure the front differential side gear backlash.

Standard backlash:

0.05 to 0.20 mm (0.0020 to 0.0079 in.)

If the backlash is outside the specifications, replace the side gear thrust washers.

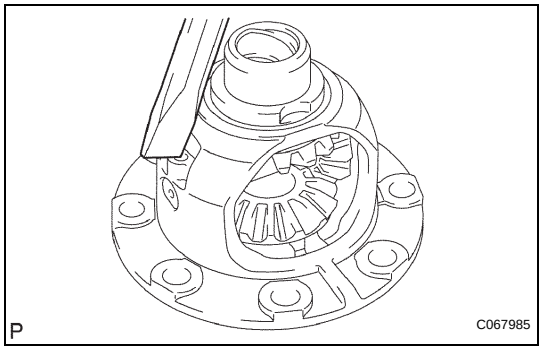

4. REMOVE FRONT DIFFERENTIAL PINION SHAFT STRAIGHT PIN

(a) Using a chisel and a hammer, loosen the staked part of the front differential case.

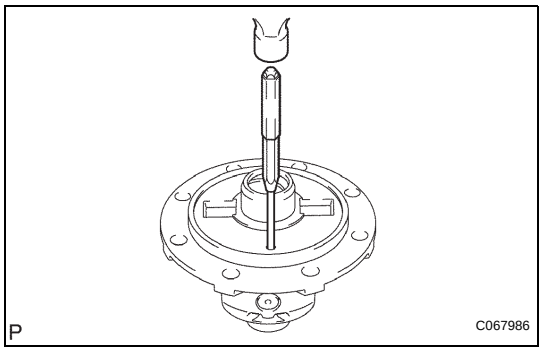

(b) Using a pin punch (ϕ3 mm) and a hammer, remove the front differential pinion shaft straight pin from the front differential case.

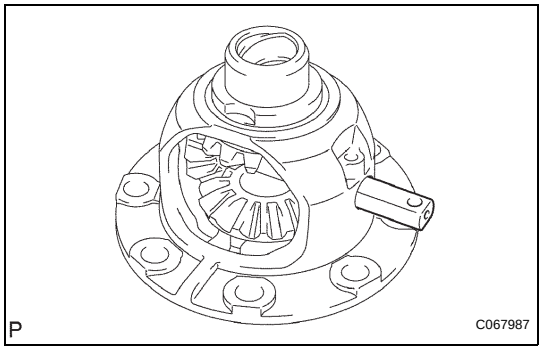

5. REMOVE FRONT DIFFERENTIAL PINION SHAFT NO.1

(a) Remove front differential pinion shaft No. 1 from the front differential case.

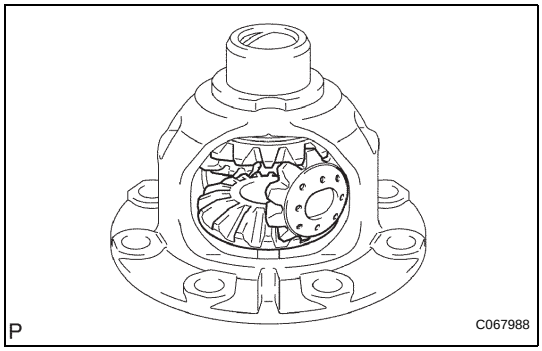

6. REMOVE FRONT DIFFERENTIAL SIDE GEAR

(a) Remove the 2 front differential pinions, 2 front differential pinion thrust washers, 2 front differential side gear thrust washers No. 1 and 2 front differential side gears from the front differential case.
HINT:
Revolving the front differential pinion, remove the 2 pinions and 2 side gears.

INSPECTION

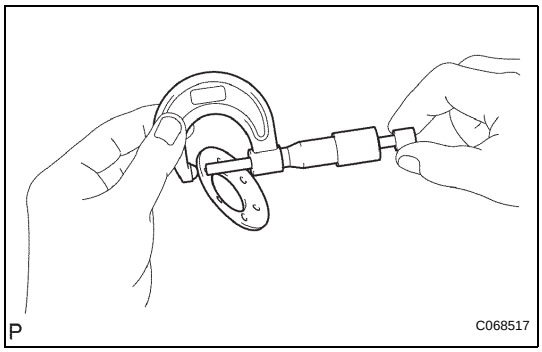

1. INSPECT FRONT DIFFERENTIAL PINION THRUST WASHER

(a) Using a micrometer, measure the thickness of the front differential pinion thrust washer.
Minimum thickness:
0.94 mm (0.03701 in.)
If the thickness is less than the minimum, replace the front differential pinion thrust washer.

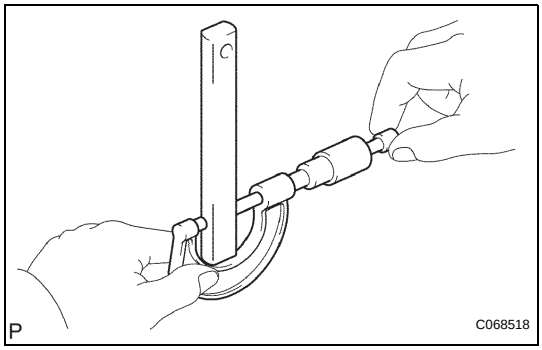

2. INSPECT FRONT DIFFERENTIAL PINION SHAFT NO.1

(a) Using a micrometer, measure the outer diameter of front differential pinion shaft No. 1.
Minimum outer diameter:
16.982 mm (0.6685 in.)
If the outer diameter is less than the minimum, replace front differential pinion shaft No. 1.

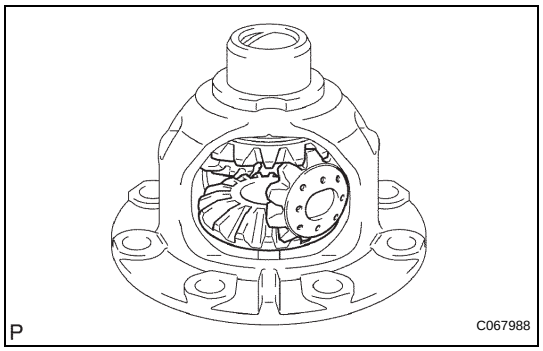

REASSEMBLY

1. INSTALL FRONT DIFFERENTIAL SIDE GEAR

(a) Coat the sliding and rotating surfaces of the front differential side gear with gear oil.

(b) Install the 2 front differential side gear thrust washers No. 1 onto the 2 front differential side gears.

(c) Install the 2 front differential side gears, 2 front differential pinions and 2 front differential pinion thrust washers onto the front differential case.
HINT:
Revolving the front differential side gear, install the 2 front differential pinions and 2 front differential pinion thrust washers.

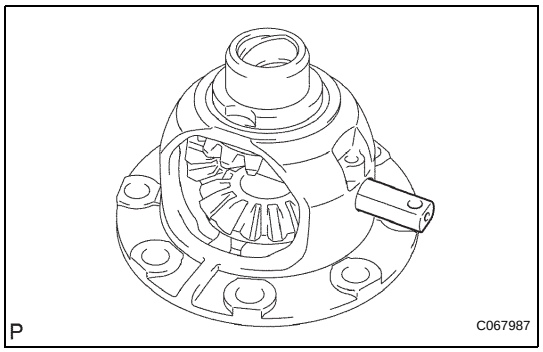

2. INSTALL FRONT DIFFERENTIAL PINION SHAFT NO.1

(a) Coat front differential pinion shaft No. 1 with MP grease.

(b) Install front differential pinion shaft No. 1 onto the front differential case so that the hole for the front differential pinion shaft straight pin is aligned with the hole in the front differential case.

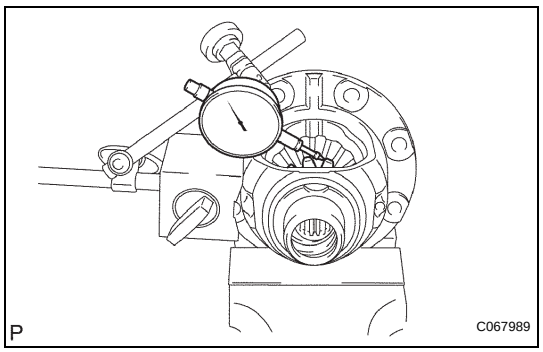

3. ADJUST FRONT DIFFERENTIAL SIDE GEAR BACKLASH

(a) Fix the front differential pinion to the front differential case side. Using a dial indicator, measure the front differential side gear backlash.
Standard backlash:
0.05 to 0.20 mm (0.0020 to 0.0079 in.)
If the backlash is outside the specifications, replace the side gear thrust washer.
Thrust washer thickness

Parts No.	Thickness mm (in.)
41361 - 22140	0.95 (0.0374 in.)
41361 - 22020	1.00 (0.0394 in.)
41361 - 22150	1.05 (0.0413 in.)
41361 - 22030	1.10 (0.0433 in.)
41361 - 22160	1.15 (0.0452 in.)
41361 - 22040	1.20 (0.0472 in.)

HINT:
- Because the thrust washer does not have any marks for distinction, measure the thickness with a micrometer to select a proper thrust washer.
- Select washers of the same thickness for both the right and left.

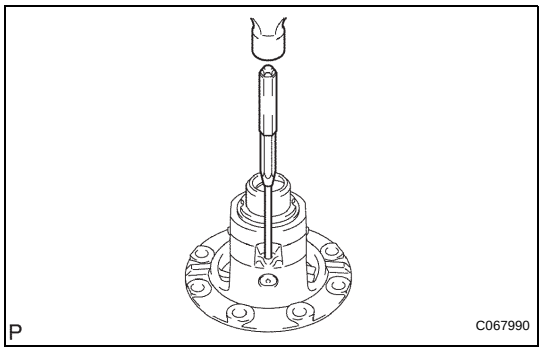

4. INSTALL FRONT DIFFERENTIAL PINION SHAFT STRAIGHT PIN

(a) Using a pin punch (ϕ3 mm) and a hammer, install the front differential pinion shaft straight pin onto the front differential case.

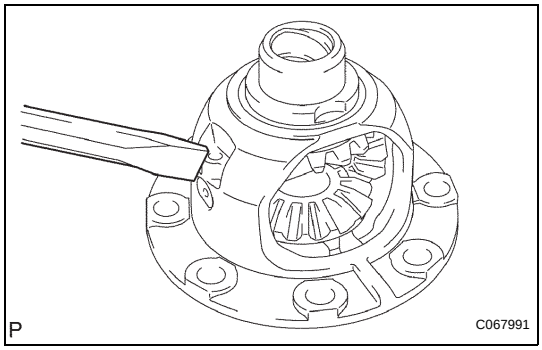

(b) Using a chisel and a hammer, stake the front differential case hole.

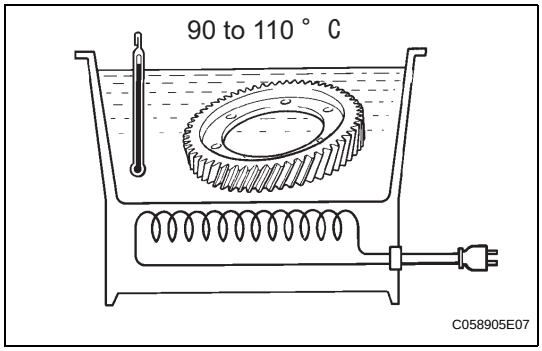

5. INSTALL FRONT DIFFERENTIAL RING GEAR

(a) Clean the contact surfaces of the front differential case and ring gear.

(b) Using a heater, heat the front differential ring gear to 90 to 110°C (194.0 to 230.0°F).

(c) After the moisture on the ring gear has completely evaporated, quickly install the ring gear onto the differential case.

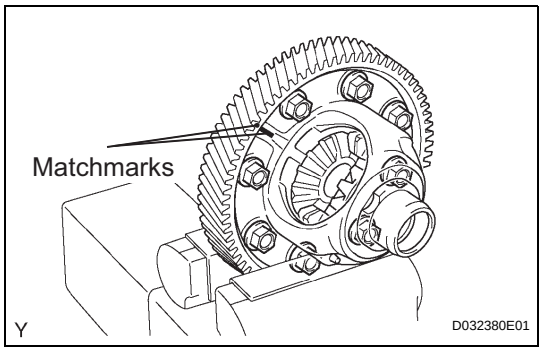

(d) Aligning the 2 matchmarks, quickly install the front differential ring gear onto the front differential case.

(e) Install the 8 bolts.
Torque: 77 N*m (790 kgf*cm, 57 ft.*lbf)

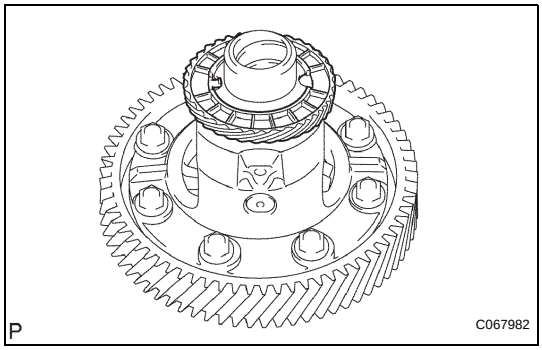

6. INSTALL SPEEDOMETER DRIVE GEAR

(a) Install the speedometer drive gear onto the front differential case.