ENGINE (1NZ–FXE)

141OK–01

INSPECTION

1. **INSPECT ENGINE COOLANT (See page 16–11)**
2. **INSPECT ENGINE OIL (See page 17–1)**
3. **INSPECT AIR CLEANER FILTER ELEMENT SUB–ASSY**
4. **INSPECT SPARK PLUG (See page 18–6)**

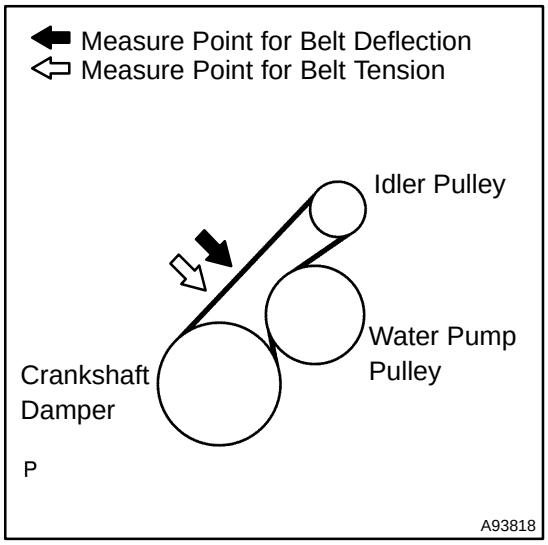

5. **INSPECT FAN AND GENERATOR V BELT**

(a) Inspect the V–ribbed belt tension and deflection.

Belt deflection: (Pressing force 98 N {10 kgf, 22 lbf})

New Belt mm (in.)	Used Belt mm (in.)
9.0 to 12.0 (0.35 to 0.47)	11.0 to 15.0 (0.43 to 0.59)

Belt tension:

New Belt N (kg, lb)	Used Belt N (kg, lb)
392 to 588 (40 to 60, 88 to 132)	196 to 392 (20 to 40, 44 to 88)

NOTICE:

- **Inspect the belt deflection at the specified point of the pulley.**
- **When replacing the belt with a new one, adjust the belt deflection and tension to the intermediate values of the ”New Belt”.**
- **When inspecting the belt which have been used for over 5 minutes, apply the belt deflection and tension of the ”Used Belt”.**
- **When reinstalling the belt which have been used for over 5 minutes, adjust the belt deflection and tension to the inetermediate values of the ”Used Belt”.**

cardiagn.com

6. INSPECT ENGINE IDLE SPEED

(a) Set the vehicle to the ”INSPECTION MOD1” (see page 01–5).

(b) Warm up the engine.

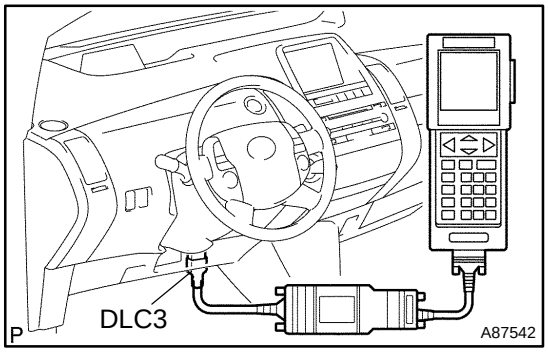

(c) Connect the hand–held tester to the DLC3.

(d) Turn the power switch ON (IG).

(e) Select the item:
DIAGNOSIS / ENHANCED OBD II / DATA LIST / ENGINE SPD
Idle speed: 950 to 1050 rpm (P range)

NOTICE:

- **Turn all the electrical systems OFF.**
- **Inspect the engine idle speed with the cooling fan OFF.**

HINT:
Refer to the hand–held tester operator’s manual if you need help to select DATA LIST.

7. INSPECT IGNITION TIMING

(a) Set the vehicle to the ”INSPECTION MOD1” (see page 01–5).

(b) Warm up the engine.

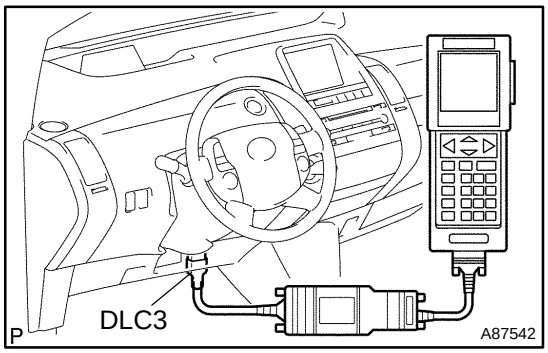

(c) Connect the hand–held tester to the DLC3.

(d) Turn the power switch ON (IG).

(e) Select the item:
DIAGNOSIS / ENHANCED OBD II / ENGINE AND ECT / DATA LIST / IGN ADVANCE
Ignition timing: 8 to 12°CA BTDC (at idle)

NOTICE:

- **Turn all the electrical systems OFF.**
- **Inspect the engine idle speed with the cooling fan OFF.**

HINT:
Refer to the hand–held tester operator’s manual if you need help to select DATA LIST.

(f) Check that the ignition timing advances immediately when the engine speed is increased.

cardiagn.com

8. INSPECT COMPRESSION

(a) Remove the windshield wipe link assembly (see page 66–14).

(b) Remove the cowl top panel outer front (see page 11–15).

(c) Set the vehicle to the ”INSPECTION MOD1” (see page 01–5).

(d) Warm up the engine.

(e) Remove the air cleaner assembly (see page 17–7).

(f) Disconnect all the fuel injector connectors.

(g) Disconnect the 4 ignition coil connectors and remove the 4 bolts. Then remove the 4 ignition coils.

NOTICE:

If inspecting the compression with the ignition coil connector disconnected, a DTC will be detected. After the inspection, check the DTC.

(h) Remove all the spark plugs.

(i) Insert a compression gauge.

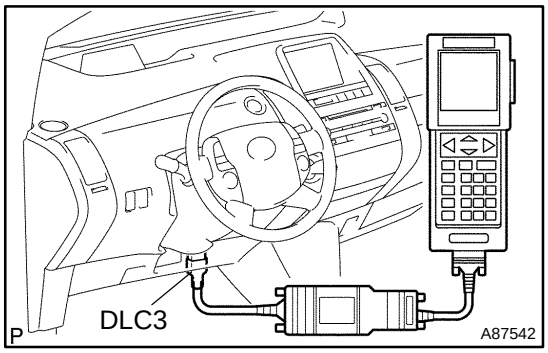

(j) Connect the hand–held tester to the DLC3.

(k) Turn the power switch ON (IG).

(l) Select the item:
DIAGNOSIS / ENHANCED OBD II / HV ECU / ACTIVE TEST / CRANKING RQST

(m) Turn the power switch ON with depressing the brake pedal. Then, measure the compression pressure of each cylinder.
Compression pressure:
882 kPa (9.0 kgf/cm^2, 128 psi)
Minimum pressure:
686 kPa (7.0 kgf/cm^2, 99 psi)
Difference between each cylinder:
98 kPa (1.0 kgf/cm^2, 14 psi)

NOTICE:

- **Measure the compression pressure as quickly as possible.**
- **After performing all the procedures, be sure to clear DTCs stored in the memory. Then check that the normal code is output.**

If the compression pressure is low, pour a light coat of engine oil into the cylinder block, then measure the compression pressure again.

HINT:

- If the compression increases after pouring engine oil, the piston ring may be damaged.
- If the compression does not change after pouring engine oil, defects may be occuring around the valve.

(n) Install all the spark plugs.
Torque: 18 N·m (184 kgf·cm, 13 ft·lbf)

cardiagn.com

(o) Install the 4 ignition coil connectors.
Torque: 9.0 N·m (92 kgf·cm, 80 in.·lbf)
(p) Connect the 4 ignition coil connectors.
(q) Connect all the fuel injector connectors.
(r) Install the air cleaner assembly (see page 17–7).
(s) Install the cowl top panel outer front (see page 11–15).
(t) Install the windshield wipe link assembly (see page 66–14).

9. INSPECT CO/HC

(a) Set the vehicle to the ”INSPECTION MOD1” (see page 01–5).
(b) Race the engine at 2,500 rpm for approximately 180 seconds.
(c) Insert at least 40 cm (1.3 ft) of the CO/HC meter testing probe into the tailpipe while idling.
(d) Immediately check the CO/HC concentration at idle and 2,500 rpm.

HINT:
- Complete the measuring within 3 minutes.
- When doing the 2 mode (at idle and 2,500 rpm) test, the procedure may vary according to local regulations.

(e) If the CO/HC concentration does not comply with regulations, perfrom troubleshooting in the order given below.
(1) Check the heated oxygen sensor operation (see page 12–9).
(2) See the table below for possible causes, then inspect the applicable causes and correct them if necessary.

CO	HC	Problems	Causes
Normal	High	Rough idle	3. Faulty ignitions: • Incorrect timing • Fouled, shorted or improperly gapped plugs 4. Incorrect valve clearance 5. Leaky intake and exhaust valves 6. Leaky cylinders
Low	High	Rough idle (Fluctuating HC reading)	1. Vacuum leaks: • PCV hoses • Intake manifold • Throttle body 2. Lean mixture causing misfire
High	High	Rough idle (Black smoke from exhaust)	1. Restricted air filter 2. Plugged PCV valve 3. Faulty SFI systems: • Faulty pressure regulator • Defective water temperature sensor • Defective mass air–flow meter • Faulty ECM • Faulty injectors • Faulty throttle position sensor

cardiagn.com

FAN AND GENERATOR V BELT (1NZ–FXE)

141OL–01

REPLACEMENT

1. REMOVE ENGINE UNDER COVER RH

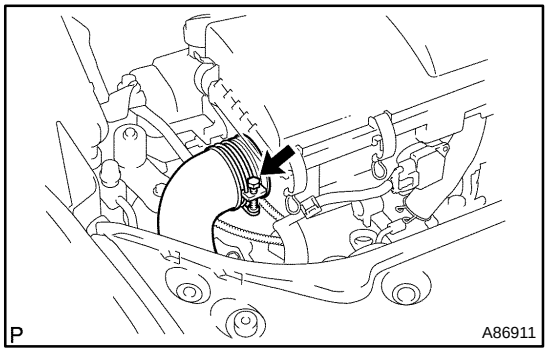

2. DISCONNECT AIR CLEANER INLET NO.1

(a) Loosen the clamp, then disconnect the air cleaner inlet No. 1 from the air cleaner case.

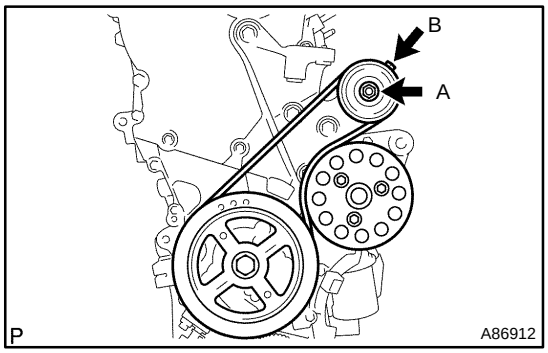

3. REMOVE FAN AND GENERATOR V BELT

(a) Install the idler puller assembly, then loosen nut A.

(b) Turn adjust bolt B, then relieve the V–ribbed belt tension to remove.

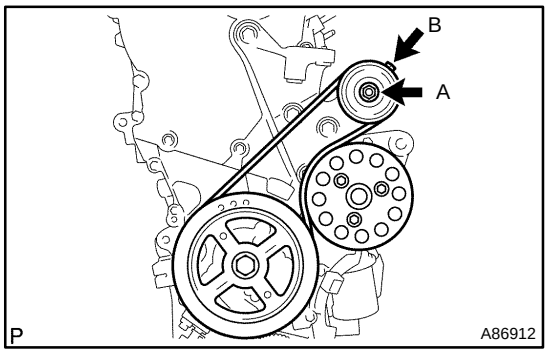

4. INSTALL FAN AND GENERATOR V BELT

(a) Temporarily install the V–ribbed belt to each pulley.

(b) Turn adjust bolt B to adjust the V–ribbed belt tension.

(c) Install the idler pulley assembly, then tighten nut A.
Torque: 40 N·m (408 kgf·cm, 30 ft·lbf)

5. INSPECT DRIVE BELT DEFLECTION AND TENSION (See page 14–1)

6. CONNECT AIR CLEANER INLET NO.1

7. INSTALL ENGINE UNDER COVER RH

cardiagn.com

VALVE CLEARANCE (1NZ–FXE)

141OM–01

ADJUSTMENT

1. **REMOVE REAR FLOOR BOARD NO.2 (See page 21–116)**
2. **REMOVE DECK FLOOR BOX REAR (See page 21–116)**
3. **REMOVE REAR FLOOR BOARD NO.3 (See page 21–116)**
4. **DISCONNECT BATTERY NEGATIVE TERMINAL (See page 21–116)**
5. **REMOVE ENGINE UNDER COVER RH**
6. **REMOVE WINDSHIELD WIPER LINK ASSY (See page 66–14)**
7. **REMOVE COWL TOP PANEL SUB–ASSY OUTER FRONT (See page 11–15)**
8. **REMOVE RADIATOR SUPPORT OPENING COVER (See page 16–11)**
9. **REMOVE AIR CLEANER ASSY (See page 17–7)**
10. **SUSPEND BRAKE MASTER CYLINDER RESERVOIR SUB–ASSY (See page 17–7)**
11. **REMOVE RESERVOIR BRACKET (See page 17–7)**
12. **REMOVE CYLINDER HEAD COVER SUB–ASSY (See page 17–7)**

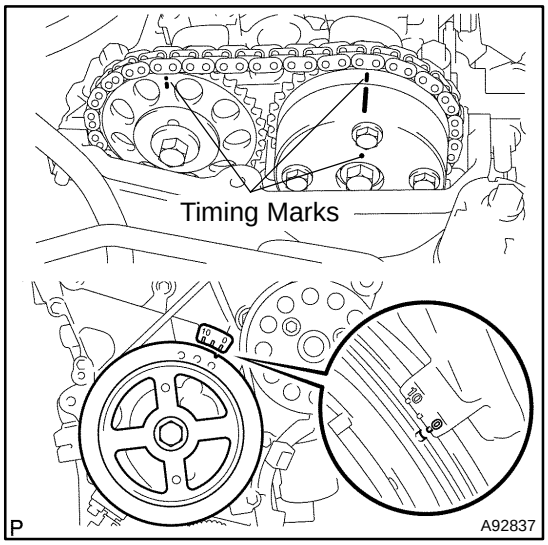

13. INSPECT VALVE CLEARANCE

(a) Set the No. 1 cylinder to the TDC/compression.

(1) Turn the crankshaft damper clockwise, then align its timing mark notch with the timing mark ”0”.

(2) Check that the timing marks of the camshaft timing gear are located as illustrated.

HINT:
If not, turn the crankshaft to align the marks.

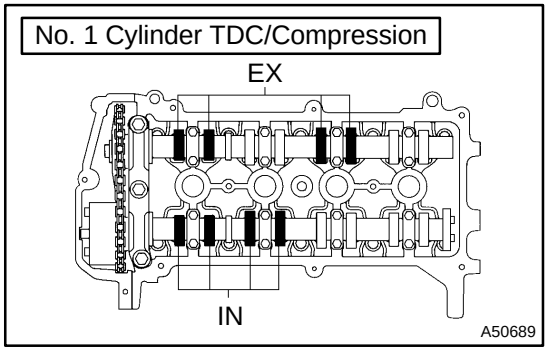

(b) Inspect the valve clearance indicated in the illustration.

(1) Using a feeler gauge, measure the clearance between the valve lifter and camshaft.

Valve clearance (Cold):
Intake 0.17 to 0.23 mm (0.007 to 0.009 in.)
Exhaust 0.27 to 0.33 mm (0.011 to 0.013 in.)

If the clearance is not as specified, record the out–of–specification measurement, then adjust the valve clearance.

(c) Turn the crankshaft clockwise by 1 complete revolution (360◆) and set the No. 4 cylinder to the TDC/compression.

cardiagn.com

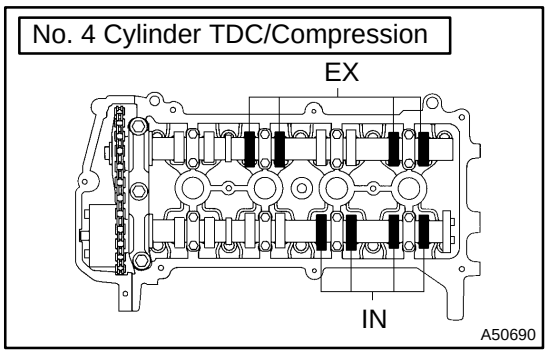

(d) Inspect the valve clearance indicated in the illustration.
(1) Using a feeler gauge, measure the clearance between the valve lifter and camshaft.
Valve clearance (Cold):
Intake 0.17 to 0.23 mm (0.007 to 0.009 in.)
Exhaust 0.27 to 0.33 mm (0.011 to 0.013 in.)

If the clearance is not as specified, record the out–of–specification measurement, then adjust the valve clearance.

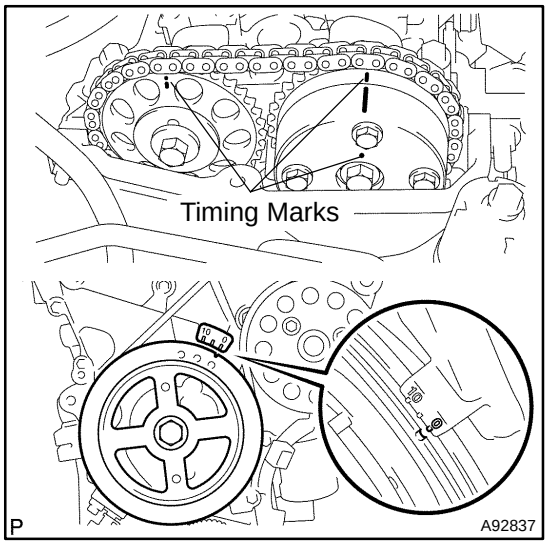

14. ADJUST VALVE CLEARANCE

(a) Set the No. 1 cylinder to the TDC/compression.
(1) Turn the crankshaft damper clockwise, then align its timing mark notch with the timing mark ”0”.
(2) Check that the timing marks of the camshaft timing gear are located as illustrated.

HINT:
If not, turn the crankshaft to align the marks.

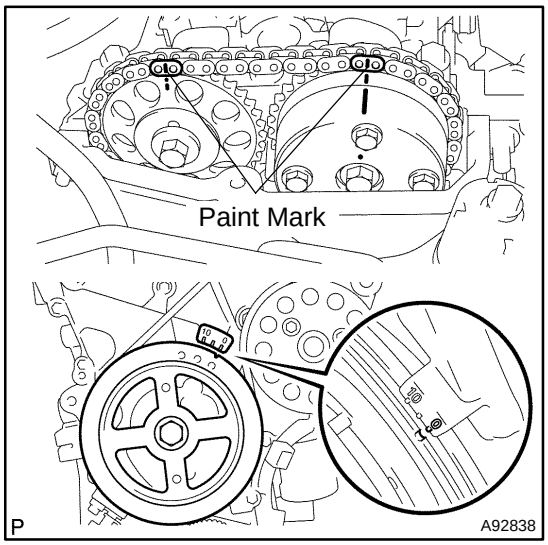

(3) Put the paint marks on the timing chain plates which align with timing marks of the camshaft timing gear.

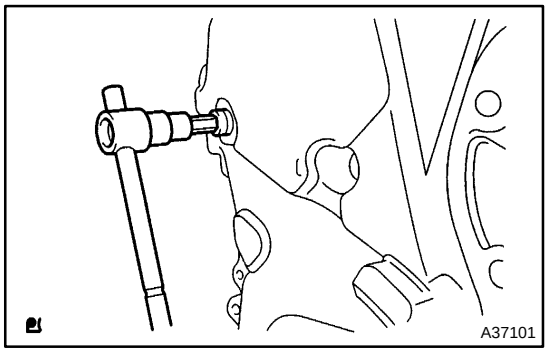

(b) Using 8 mm socket hexagon wrench, remove the service hole screw plug.

cardiagn.com

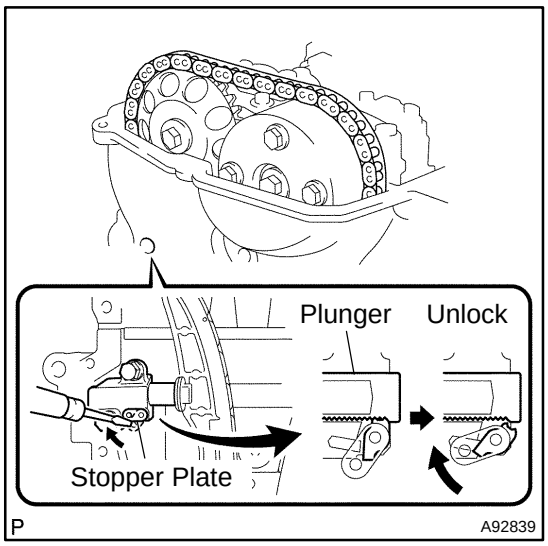

(c) Insert a screwdriver into the service hole of the chain tensioner to hold the stopper plate of the chain tensioner upward.

HINT:

Lifting up the stopper plate of the chain tensioner unlocks the plunger.

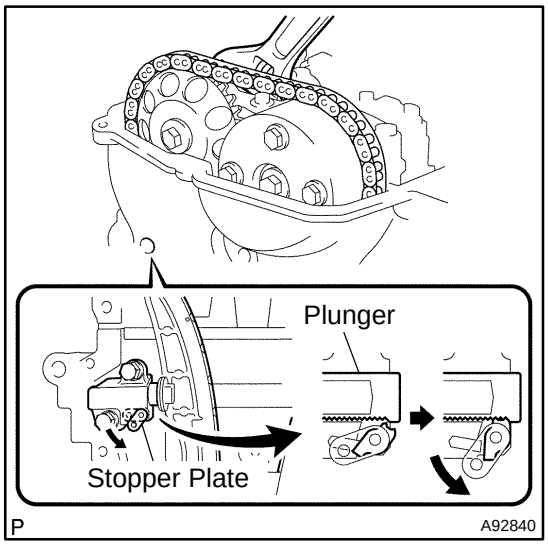

(d) Keeping the stopper plate of the chain tensioner lifted, slightly rotate the hexagonal lobe of the camshaft No. 2 to the right with an adjustable wrench so the plunger of the chain tensioner is pushed.

HINT:

When the camshaft No. 2 is slightly rotated to the right, the plunger is pushed.

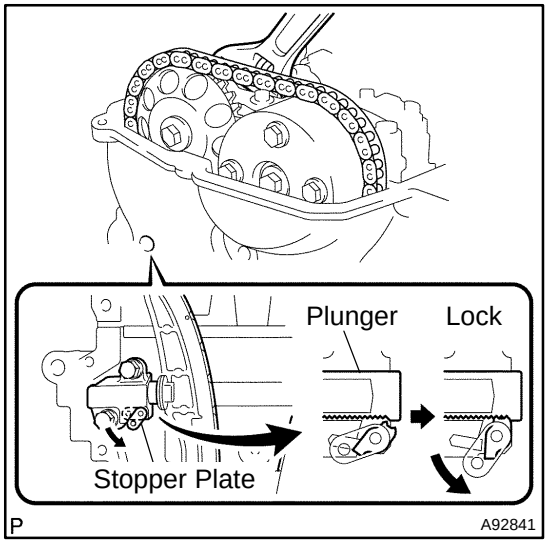

(e) Keeping the adjustable wrench installed, remove the screwdriver with the plunger pushed.

NOTICE:

Do not move the adjustable wrench.

HINT:

Removing the screwdriver lifts down the stopper plate and locks the plunger.

cardiagn.com

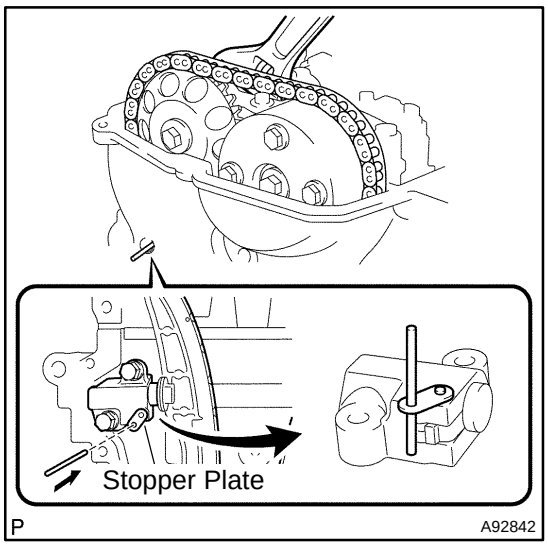

(f) Insert a 3.0 mm (0.118 in.) diameter bar into the hole of the stopper plate with the stopper plate of the chain tensioner lifted down and locked.

HINT:

If a 3.0 mm (0.118 in.) diameter bar cannot be inserted into the hole of the stopper plate, rotate the camshaft No. 2 slightly to the left and right. Then a 3.0 mm (0.118 in.) diameter bar can be inserted easily.

(g) Secure the 3.0 mm (0.118 in.) diameter bar with tape.

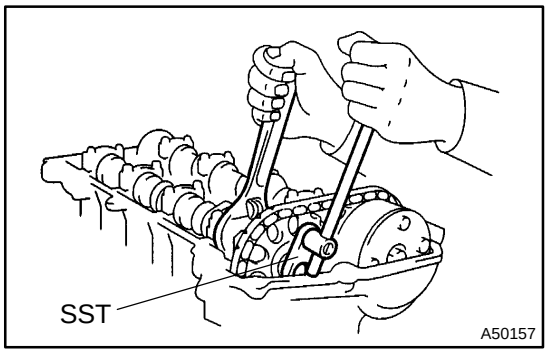

(h) Hold the hexagonal lobe of the camshaft No. 2 with the adjustable wrench.

(i) Using SST, loosen the bolt.
SST 09023–38400

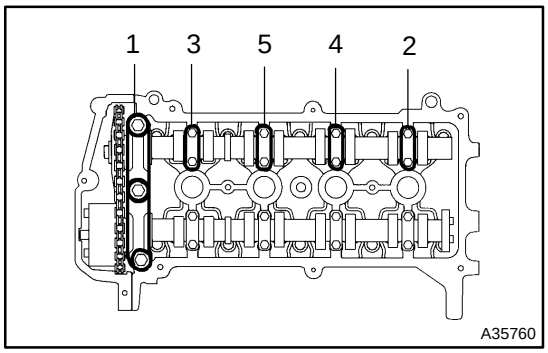

(j) Remove the camshaft bearing caps No. 1 and No. 2 in the sequence shown in the illustration.

NOTICE:

Uniformly loosen the bolts keeping the camshaft No. 2 level.

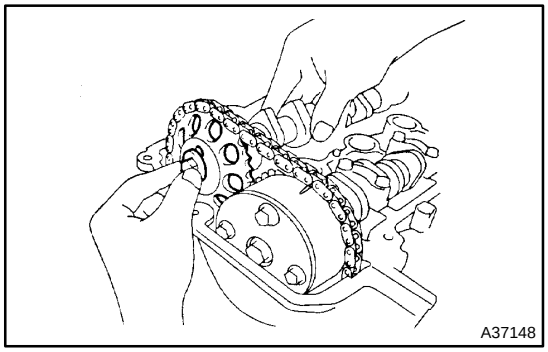

(k) Remove the bolt when the camshaft No. 2 is lifted slightly, then remove the camshaft No. 2 and camshaft timing gear.

cardiagn.com

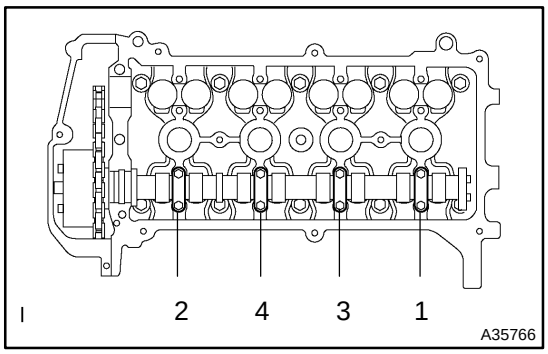

(l) Remove the camshaft bearing caps No. 2 in the sequence shown in the illustration.

NOTICE:

Uniformly loosen the bolts keeping the camshaft level.

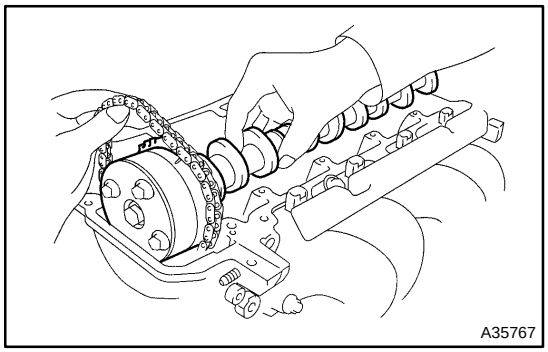

(m) Hold the timing chain by hand, then remove the camshaft.

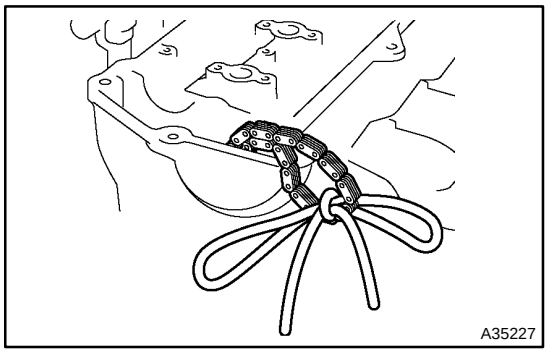

(n) Tie the timing chain with a string or wire.

NOTICE:

Prevent foreign objects from getting into the engine compartment with a shop rag.

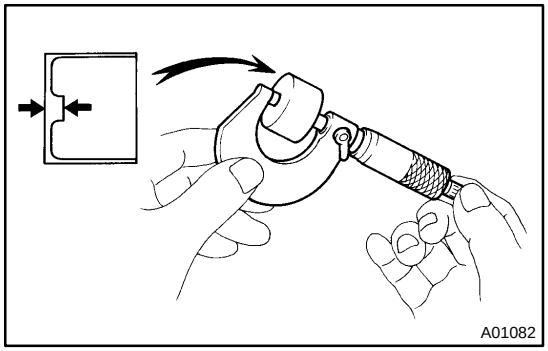

(o) Using a micrometer, measure the thickness of the removed valve lifter.

(p) Calculate the thickness of the valve lifter so that the valve clearance comes within the specified value.

A	Thickness of new lifter
B	Thickness of used lifter
C	Measured valve clearance

Specified value (Cold):

Intake A = B + (C – 0.20 mm (0.008 in.))

Exhaust A = B + (C – 0.30 mm (0.012 in.))

cardiagn.com

(q) Select a new lifter with a thickness which is as close to the calculated values as possible .

EXAMPLE (Intake):
Measured valve clearance = 0.40 mm (0.0158 in.)
0.40 mm (0.0158 in.) – 0.20 mm (0.0079 in.) = 0.20 mm (0.0079 in.)
(Measured – Specification = Excess clearance)
Used lifter measurement = 5.25 mm (0.2067 in.)
0.20 mm (0.0079 in.) + 5.25 mm (0.2067 in.) = 5.45 mm (0.2146 in.)
(Excess clearance + Used lifter = Ideal new lifter)
Closest new lifter = 5.45 mm (0.2146 in.)
Select No. 46 lifter (5.46 mm (0.2150 in.))

HINT:

- The lifters are available in 35 sizes in increments of 0.020 mm (0.0008 in.), from 5.060 mm (0.1992 in.) to 5.740 mm (0.2260 in.)
- Refer to the New Lifter Thickness table on the next 2 pages.

cardiagn.com

Valve Lifter Selection Chart (Intake)

Measured clearance mm (in.) \ Installed lifter thickness mm (in.)	5.060 (0.1992)	5.080 (0.2000)	5.100 (0.2008)	5.120 (0.2016)	5.140 (0.2024)	5.160 (0.2031)	5.180 (0.2039)	5.200 (0.2047)	5.210 (0.2051)	5.220 (0.2055)	5.230 (0.2059)	5.240 (0.2063)	5.250 (0.2067)	5.260 (0.2071)	5.270 (0.2075)	5.280 (0.2079)	5.290 (0.2083)	5.300 (0.2087)	5.310 (0.2091)	5.320 (0.2094)	5.330 (0.2098)	5.340 (0.2102)	5.350 (0.2106)	5.360 (0.2110)	5.370 (0.2114)	5.380 (0.2118)	5.390 (0.2122)	5.400 (0.2126)	5.410 (0.2130)	5.420 (0.2134)	5.430 (0.2138)	5.440 (0.2142)	5.450 (0.2146)	5.460 (0.2150)	5.470 (0.2154)	5.480 (0.2157)	5.490 (0.2161)	5.500 (0.2165)	5.510 (0.2169)	5.520 (0.2173)	5.530 (0.2177)	5.540 (0.2181)	5.550 (0.2185)	5.560 (0.2189)	5.570 (0.2193)	5.580 (0.2197)	5.590 (0.2201)	5.600 (0.2205)	5.620 (0.2213)	5.640 (0.2220)	5.660 (0.2228)	5.680 (0.2236)	5.700 (0.2244)	5.720 (0.2252)	5.740 (0.2260)
0.000 – 0.030 (0.0000 – 0.0012)											06	06	06	08	10	10	12	12	14	14	16	16	18	18	20	20	22	22	24	24	26	26	28	28	30	30	32	32	34	34	36	36	38	38	40	40	42	42	44	46	48	50	52	54	56
0.031 – 0.050 (0.0012 – 0.0020)								06	06	06	08	08	10	10	12	12	14	14	16	16	18	18	20	20	22	22	24	24	26	26	28	28	30	30	32	32	34	34	36	36	38	38	40	40	42	42	44	44	46	48	50	52	54	56	58
0.051 – 0.070 (0.0020 – 0.0028)							06	06	08	08	10	10	12	12	14	14	16	16	18	18	20	20	22	22	24	24	26	26	28	28	30	30	32	32	34	34	36	36	38	38	40	40	42	42	44	44	46	46	48	50	52	54	56	58	60
0.071 – 0.090 (0.0028 – 0.0035)						06	06	08	10	10	12	12	14	14	16	16	18	18	20	20	22	22	24	24	26	26	28	28	30	30	32	32	34	34	36	36	38	38	40	40	42	42	44	44	46	46	48	48	50	52	54	56	58	60	62
0.091 – 0.110 (0.0036 – 0.0043)					06	06	08	10	12	12	14	14	16	16	18	18	20	20	22	22	24	24	26	26	28	28	30	30	32	32	34	34	36	36	38	38	40	40	42	42	44	44	46	46	48	48	50	50	52	54	56	58	60	62	64
0.111 – 0.130 (0.0044 – 0.0051)				06	06	08	10	12	14	14	16	16	18	18	20	20	22	22	24	24	26	26	28	28	30	30	32	32	34	34	36	36	38	38	40	40	42	42	44	44	46	46	48	48	50	50	52	52	54	56	58	60	62	64	66
0.131 – 0.149 (0.0052 – 0.0059)			06	06	08	10	12	14	16	16	18	18	20	20	22	22	24	24	26	26	28	28	30	30	32	32	34	34	36	36	38	38	40	40	42	42	44	44	46	46	48	48	50	50	52	52	54	54	56	58	60	62	64	66	68
0.150 – 0.250 (0.0059 – 0.0098)																																																									
0.251 – 0.270 (0.0099 – 0.0106)	12	14	16	18	20	22	24	26	28	28	30	30	32	32	34	34	36	36	38	38	40	40	42	42	44	44	46	46	48	48	50	50	52	52	54	54	56	56	58	58	60	60	62	62	64	64	66	66	68	70	72	74	74		
0.271 – 0.290 (0.0107 – 0.0114)	14	16	18	20	22	24	26	28	30	30	32	32	34	34	36	36	38	38	40	40	42	42	44	44	46	46	48	48	50	50	52	52	54	54	56	56	58	58	60	60	62	62	64	64	66	66	68	68	70	72	74	74			
0.291 – 0.310 (0.0115 – 0.0122)	16	18	20	22	24	26	28	30	32	32	34	34	36	36	38	38	40	40	42	42	44	44	46	46	48	48	50	50	52	52	54	54	56	56	58	58	60	60	62	62	64	64	66	66	68	68	70	70	72	74	74				
0.311 – 0.330 (0.0122 – 0.0130)	18	20	22	24	26	28	30	32	34	34	36	36	38	38	40	40	42	42	44	44	46	46	48	48	50	50	52	52	54	54	56	56	58	58	60	60	62	62	64	64	66	66	68	68	70	70	72	72	74	74					
0.331 – 0.350 (0.0130 – 0.0138)	20	22	24	26	28	30	32	34	36	36	38	38	40	40	42	42	44	44	46	46	48	48	50	50	52	52	54	54	56	56	58	58	60	60	62	62	64	64	66	66	68	68	70	70	72	72	74	74	74						
0.351 – 0.370 (0.0138 – 0.0146)	22	24	26	28	30	32	34	36	38	38	40	40	42	42	44	44	46	46	48	48	50	50	52	52	54	54	56	56	58	58	60	60	62	62	64	64	66	66	68	68	70	70	72	72	74	74	74								
0.371 – 0.390 (0.0146 – 0.0154)	24	26	28	30	32	34	36	38	40	40	42	42	44	44	46	46	48	48	50	50	52	52	54	54	56	56	58	58	60	60	62	62	64	64	66	66	68	68	70	70	72	72	74	74	74	74									
0.391 – 0.410 (0.0154 – 0.0161)	26	28	30	32	34	36	38	40	42	42	44	44	46	46	48	48	50	50	52	52	54	54	56	56	58	58	60	60	62	62	64	64	66	66	68	68	70	70	72	72	74	74	74	74											
0.411 – 0.430 (0.0162 – 0.0169)	28	30	32	34	36	38	40	42	44	44	46	46	48	48	50	50	52	52	54	54	56	56	58	58	60	60	62	62	64	64	66	66	68	68	70	70	72	72	74	74	74	74													
0.431 – 0.450 (0.0170 – 0.0177)	30	32	34	36	38	40	42	44	46	46	48	48	50	50	52	52	54	54	56	56	58	58	60	60	62	62	64	64	66	66	68	68	70	70	72	72	74	74	74	74															
0.451 – 0.470 (0.0178 – 0.0185)	32	34	36	38	40	42	44	46	48	48	50	50	52	52	54	54	56	56	58	58	60	60	62	62	64	64	66	66	68	68	70	70	72	72	74	74	74	74																	
0.471 – 0.490 (0.0185 – 0.0193)	34	36	38	40	42	44	46	48	50	50	52	52	54	54	56	56	58	58	60	60	62	62	64	64	66	66	68	68	70	70	72	72	74	74	74	74																			
0.491 – 0.510 (0.0193 – 0.0201)	36	38	40	42	44	46	48	50	52	52	54	54	56	56	58	58	60	60	62	62	64	64	66	66	68	68	70	70	72	72	74	74	74	74																			
0.511 – 0.530 (0.0201 – 0.0209)	38	40	42	44	46	48	50	52	54	54	56	56	58	58	60	60	62	62	64	64	66	66	68	68	70	70	72	72	74	74	74	74																					
0.531 – 0.550 (0.0209 – 0.0217)	40	42	44	46	48	50	52	54	56	56	58	58	60	60	62	62	64	64	66	66	68	68	70	70	72	72	74	74	74	74																									
0.551 – 0.570 (0.0217 – 0.0224)	42	44	46	48	50	52	54	56	58	58	60	60	62	62	64	64	66	66	68	68	70	70	72	72	74	74	74	74																											
0.571 – 0.590 (0.0225 – 0.0232)	44	46	48	50	52	54	56	58	60	60	62	62	64	64	66	66	68	68	70	70	72	72	74	74	74	74																											
0.591 – 0.610 (0.0233 – 0.0240)	46	48	50	52	54	56	58	60	62	62	64	64	66	66	68	68	70	70	72	72	74	74	74	74																											
0.611 – 0.630 (0.0241 – 0.0248)	48	50	52	54	56	58	60	62	64	64	66	66	68	68	70	70	72	72	74	74	74	74																											
0.631 – 0.650 (0.0248 – 0.0256)	50	52	54	56	58	60	62	64	66	66	68	68	70	70	72	72	74	74	74	74																											
0.651 – 0.670 (0.0256 – 0.0264)	52	54	56	58	60	62	64	66	68	68	70	70	72	72	74	74	74	74																													
0.671 – 0.690 (0.0264 – 0.0272)	54	56	58	60	62	64	66	68	70	70	72	72	74	74	74	74																															
0.691 – 0.710 (0.0272 – 0.0280)	56	58	60	62	64	66	68	70	72	72	74	74	74	74																																	
0.711 – 0.730 (0.0280 – 0.0287)	58	60	62	64	66	68	70	72	74	74	74	74																																			
0.731 – 0.750 (0.0288 – 0.0295)	60	62	64	66	68	70	72	74	74	74																																					
0.751 – 0.770 (0.0296 – 0.0303)	62	64	66	68	70	72	74	74																																							
0.771 – 0.790 (0.0304 – 0.0311)	64	66	68	70	72	74	74																																								
0.791 – 0.810 (0.0311 – 0.0319)	66	68	70	72	74	74																																									
0.811 – 0.830 (0.0319 – 0.0327)	68	70	72	74	74																																										
0.831 – 0.850 (0.0327 – 0.0335)	70	72	74	74																																											
0.851 – 0.870 (0.0335 – 0.0343)	72	74	74																																												
0.871 – 0.890 (0.0343 – 0.0350)	74	74																																													
0.891 – 0.910 (0.0351 – 0.0358)	74																																														

Intake valve clearance (Cold):
0.17 to 0.23 mm (0.007 to 0.009 in.)

EXAMPLE: The 5.250 mm (0.2067 in.) lifter is installed, and the measured clearance is 0.400 mm (0.0158 in.).
Replace the 5.250 mm (0.2067 in.) lifter with a new No. 46 lifter.

New Lifter Thickness mm (in.)

Lifter No.	Thickness	Lifter No.	Thickness	Lifter No.	Thickness
06	5.060 (0.1992)	30	5.300 (0.2087)	54	5.540 (0.2181)
08	5.080 (0.2000)	32	5.320 (0.2094)	56	5.560 (0.2189)
10	5.100 (0.2008)	34	5.340 (0.2102)	58	5.580 (0.2197)
12	5.120 (0.2016)	36	5.360 (0.2110)	60	5.600 (0.2205)
14	5.140 (0.2024)	38	5.380 (0.2118)	62	5.620 (0.2213)
16	5.160 (0.2031)	40	5.400 (0.2126)	64	5.640 (0.2220)
18	5.180 (0.2039)	42	5.420 (0.2134)	66	5.660 (0.2228)
20	5.200 (0.2047)	44	5.440 (0.2142)	68	5.680 (0.2236)
22	5.220 (0.2055)	46	5.460 (0.2150)	70	5.700 (0.2244)
24	5.240 (0.2063)	48	5.480 (0.2157)	72	5.720 (0.2252)
26	5.260 (0.2071)	50	5.500 (0.2165)	74	5.740 (0.2260)
28	5.280 (0.2079)	52	5.520 (0.2173)		

A92520

cardiagn.com

Valve Lifter Selection Chart (Exhaust)

Measured clearance mm (in.) \ Installed lifter thickness mm (in.)	5.060 (0.1992)	5.080 (0.2000)	5.100 (0.2008)	5.120 (0.2016)	5.140 (0.2024)	5.160 (0.2031)	5.180 (0.2039)	5.200 (0.2047)	5.210 (0.2051)	5.220 (0.2055)	5.230 (0.2059)	5.240 (0.2063)	5.250 (0.2067)	5.260 (0.2071)	5.270 (0.2075)	5.280 (0.2079)	5.290 (0.2083)	5.300 (0.2087)	5.310 (0.2091)	5.320 (0.2094)	5.330 (0.2098)	5.340 (0.2102)	5.350 (0.2106)	5.360 (0.2110)	5.370 (0.2114)	5.380 (0.2118)	5.390 (0.2122)	5.400 (0.2126)	5.410 (0.2130)	5.420 (0.2134)	5.430 (0.2138)	5.440 (0.2142)	5.450 (0.2146)	5.460 (0.2150)	5.470 (0.2154)	5.480 (0.2157)	5.490 (0.2161)	5.500 (0.2165)	5.510 (0.2169)	5.520 (0.2173)	5.530 (0.2177)	5.540 (0.2181)	5.550 (0.2185)	5.560 (0.2189)	5.570 (0.2193)	5.580 (0.2197)	5.590 (0.2201)	5.600 (0.2205)	5.620 (0.2213)	5.640 (0.2220)	5.660 (0.2228)	5.680 (0.2236)	5.700 (0.2244)	5.720 (0.2252)	5.740 (0.2260)
0.000 – 0.030 (0.0000 – 0.0012)																					06	06	08	08	10	10	12	12	14	14	16	16	18	18	20	20	22	22	24	24	26	26	28	28	30	30	32	32	34	36	38	40	42	44	46
0.031 – 0.050 (0.0012 – 0.0020)																		06	06	06	08	08	10	10	12	12	14	14	16	16	18	18	20	20	22	22	24	24	26	26	28	28	30	30	32	32	34	34	36	38	40	42	44	46	48
0.051 – 0.070 (0.0020 – 0.0028)																06	06	06	08	08	10	10	12	12	14	14	16	16	18	18	20	20	22	22	24	24	26	26	28	28	30	30	32	32	34	34	36	36	38	40	42	44	46	48	50
0.071 – 0.090 (0.0028 – 0.0035)														06	06	06	08	08	10	10	12	12	14	14	16	16	18	18	20	20	22	22	24	24	26	26	28	28	30	30	32	32	34	34	36	36	38	38	40	42	44	46	48	50	52
0.091 – 0.110 (0.0036 – 0.0043)												06	06	06	08	08	10	10	12	12	14	14	16	16	18	18	20	20	22	22	24	24	26	26	28	28	30	30	32	32	34	34	36	36	38	38	40	40	42	44	46	48	50	52	54
0.111 – 0.130 (0.0044 – 0.0051)											06	06	08	08	10	10	12	12	14	14	16	16	18	18	20	20	22	22	24	24	26	26	28	28	30	30	32	32	34	34	36	36	38	38	40	40	42	42	44	46	48	50	52	54	56
0.131 – 0.150 (0.0052 – 0.0059)										06	08	08	10	10	12	12	14	14	16	16	18	18	20	20	22	22	24	24	26	26	28	28	30	30	32	32	34	34	36	36	38	38	40	40	42	42	44	44	46	48	50	52	54	56	58
0.151 – 0.170 (0.0059 – 0.0067)								06	08	08	10	10	12	12	14	14	16	16	18	18	20	20	22	22	24	24	26	26	28	28	30	30	32	32	34	34	36	36	38	38	40	40	42	42	44	44	46	46	48	50	52	54	56	58	60
0.171 – 0.190 (0.0067 – 0.0075)						06	06	08	10	10	12	12	14	14	16	16	18	18	20	20	22	22	24	24	26	26	28	28	30	30	32	32	34	34	36	36	38	38	40	40	42	42	44	44	46	46	48	48	50	52	54	56	58	60	62
0.191 – 0.210 (0.0075 – 0.0083)					06	06	08	10	12	12	14	14	16	16	18	18	20	20	22	22	24	24	26	26	28	28	30	30	32	32	34	34	36	36	38	38	40	40	42	42	44	44	46	46	48	48	50	50	52	54	56	58	60	62	64
0.211 – 0.230 (0.0083 – 0.0091)				06	06	08	10	12	14	14	16	16	18	18	20	20	22	22	24	24	26	26	28	28	30	30	32	32	34	34	36	36	38	38	40	40	42	42	44	44	46	46	48	48	50	50	52	52	54	56	58	60	62	64	66
0.231 – 0.249 (0.0091 – 0.0098)			06	06	08	10	12	14	16	16	18	18	20	20	22	22	24	24	26	26	28	28	30	30	32	32	34	34	36	36	38	38	40	40	42	42	44	44	46	46	48	48	50	50	52	52	54	54	56	58	60	62	64	66	68
0.250 – 0.350 (0.0098 – 0.0138)																																																							
0.351 – 0.370 (0.0138 – 0.0146)	12	14	16	18	20	22	24	26	28	28	30	30	32	32	34	34	36	36	38	38	40	40	42	42	44	44	46	46	48	48	50	50	52	52	54	54	56	56	58	58	60	60	62	62	64	64	66	66	68	70	72	74	74		
0.371 – 0.390 (0.0146 – 0.0154)	14	16	18	20	22	24	26	28	30	30	32	32	34	34	36	36	38	38	40	40	42	42	44	44	46	46	48	48	50	50	52	52	54	54	56	56	58	58	60	60	62	62	64	64	66	66	68	68	70	72	74	74			
0.391 – 0.410 (0.0154 – 0.0161)	16	18	20	22	24	26	28	30	32	32	34	34	36	36	38	38	40	40	42	42	44	44	46	46	48	48	50	50	52	52	54	54	56	56	58	58	60	60	62	62	64	64	66	66	68	68	70	70	72	74	74				
0.411 – 0.430 (0.0162 – 0.0169)	18	20	22	24	26	28	30	32	34	34	36	36	38	38	40	40	42	42	44	44	46	46	48	48	50	50	52	52	54	54	56	56	58	58	60	60	62	62	64	64	66	66	68	68	70	70	72	72	74	74					
0.431 – 0.450 (0.0170 – 0.0177)	20	22	24	26	28	30	32	34	36	36	38	38	40	40	42	42	44	44	46	46	48	48	50	50	52	52	54	54	56	56	58	58	60	60	62	62	64	64	66	68	68	70	70	72	72	74	74	74	74						
0.451 – 0.470 (0.0178 – 0.0185)	22	24	26	28	30	32	34	36	38	38	40	40	42	42	44	44	46	46	48	48	50	50	52	52	54	54	56	56	58	58	60	60	62	62	64	64	66	66	68	68	70	70	72	72	74	74	74	74							
0.471 – 0.490 (0.0185 – 0.0193)	24	26	28	30	32	34	36	38	40	40	42	42	44	44	46	46	48	48	50	50	52	52	54	54	56	56	58	58	60	60	62	62	64	64	66	66	68	68	70	70	72	72	74	74	74	74									
0.491 – 0.510 (0.0193 – 0.0201)	26	28	30	32	34	36	38	40	42	42	44	44	46	46	48	48	50	50	52	52	54	54	56	56	58	58	60	60	62	62	64	64	66	66	68	68	70	70	72	72	74	74	74	74											
0.511 – 0.530 (0.0201 – 0.0209)	28	30	32	34	36	38	40	42	44	44	46	46	48	48	50	50	52	52	54	54	56	56	58	58	60	60	62	62	64	64	66	66	68	68	70	70	72	72	74	74	74	74													
0.531 – 0.550 (0.0209 – 0.0217)	30	32	34	36	38	40	42	44	46	46	48	48	50	50	52	52	54	54	56	56	58	58	60	60	62	62	64	64	66	66	68	68	70	70	72	72	74	74	74	74															
0.551 – 0.570 (0.0217 – 0.0224)	32	34	36	38	40	42	44	46	48	48	50	50	52	52	54	54	56	56	58	58	60	60	62	62	64	64	66	66	68	68	70	70	72	72	74	74	74	74																	
0.571 – 0.590 (0.0225 – 0.0232)	34	36	38	40	42	44	46	48	50	50	52	52	54	54	56	56	58	58	60	60	62	62	64	64	66	66	68	68	70	70	72	72	74	74	74	74																			
0.591 – 0.610 (0.0233 – 0.0240)	36	38	40	42	44	46	48	50	52	52	54	54	56	56	58	58	60	60	62	62	64	64	66	66	68	68	70	70	72	72	74	74	74	74																					
0.611 – 0.630 (0.0241 – 0.0248)	38	40	42	44	46	48	50	52	54	54	56	56	58	58	60	60	62	62	64	64	66	66	68	68	70	70	72	72	74	74	74	74																					
0.631 – 0.650 (0.0248 – 0.0256)	40	42	44	46	48	50	52	54	56	56	58	58	60	60	62	62	64	64	66	66	68	68	70	70	72	72	74	74	74	74																									
0.651 – 0.670 (0.0256 – 0.0264)	42	44	46	48	50	52	54	56	58	58	60	60	62	62	64	64	66	66	68	68	70	70	72	72	74	74	74	74																											
0.671 – 0.690 (0.0264 – 0.0272)	44	46	48	50	52	54	56	58	60	60	62	62	64	64	66	66	68	68	70	70	72	72	74	74	74	74																											
0.691 – 0.710 (0.0272 – 0.0280)	46	48	50	52	54	56	58	60	62	62	64	64	66	66	68	68	70	70	72	72	74	74	74	74																											
0.711 – 0.730 (0.0280 – 0.0287)	48	50	52	54	56	58	60	62	64	64	66	66	68	68	70	70	72	72	74	74	74	74																											
0.731 – 0.750 (0.0288 – 0.0295)	50	52	54	56	58	60	62	64	66	66	68	68	70	70	72	72	74	74	74	74																													
0.751 – 0.770 (0.0296 – 0.0303)	52	54	56	58	60	62	64	66	68	68	70	70	72	72	74	74	74	74																															
0.771 – 0.790 (0.0304 – 0.0311)	54	56	58	60	62	64	66	68	70	70	72	72	74	74	74	74																																	
0.791 – 0.810 (0.0311 – 0.0319)	56	58	60	62	64	66	68	70	72	72	74	74	74	74																																			
0.811 – 0.830 (0.0319 – 0.0327)	58	60	62	64	66	68	70	72	74	74	74	74																																					
0.831 – 0.850 (0.0327 – 0.0335)	60	62	64	66	68	70	72	74	74	74																																							
0.851 – 0.870 (0.0335 – 0.0343)	62	64	66	68	70	72	74	74																																									
0.871 – 0.890 (0.0343 – 0.0350)	64	66	68	70	72	74	74																																										
0.891 – 0.910 (0.0351 – 0.0358)	66	68	70	72	74	74																																											
0.911 – 0.930 (0.0359 – 0.0366)	68	70	72	74	74																																												
0.931 – 0.950 (0.0367 – 0.0374)	70	72	74	74																																													
0.951 – 0.970 (0.0374 – 0.0382)	72	74	74																																														
0.971 – 0.990 (0.0382 – 0.0390)	74	74																																															
0.991 – 1.010 (0.0390 – 0.0398)	74																																																

New Lifter Thickness mm (in.)

Lifter No.	Thickness	Lifter No.	Thickness	Lifter No.	Thickness
06	5.060 (0.1992)	30	5.300 (0.2087)	54	5.540 (0.2181)
08	5.080 (0.2000)	32	5.320 (0.2094)	56	5.560 (0.2189)
10	5.100 (0.2008)	34	5.340 (0.2102)	58	5.580 (0.2197)
12	5.120 (0.2016)	36	5.360 (0.2110)	60	5.600 (0.2205)
14	5.140 (0.2024)	38	5.380 (0.2118)	62	5.620 (0.2213)
16	5.160 (0.2031)	40	5.400 (0.2126)	64	5.640 (0.2220)
18	5.180 (0.2039)	42	5.420 (0.2134)	66	5.660 (0.2228)
20	5.200 (0.2047)	44	5.440 (0.2142)	68	5.680 (0.2236)
22	5.220 (0.2055)	46	5.460 (0.2150)	70	5.700 (0.2244)
24	5.240 (0.2063)	48	5.480 (0.2157)	72	5.720 (0.2252)
26	5.260 (0.2071)	50	5.500 (0.2165)	74	5.740 (0.2260)
28	5.280 (0.2079)	52	5.520 (0.2173)		

Exhaust valve clearance (Cold):

0.27 to 0.33 mm (0.011 to 0.013 in.)

EXAMPLE: The 5.340 mm (0.2102 in.) lifter is installed, and the measured clearance is 0.440 mm (0.0173 in.).
Replace the 5.340 mm (0.2102 in.) lifter with a new No. 48 lifter.

A92521

cardiagn.com

(r) Install the selected valve lifter.

(s) Apply engine oil to the cam and cylinder head journal.

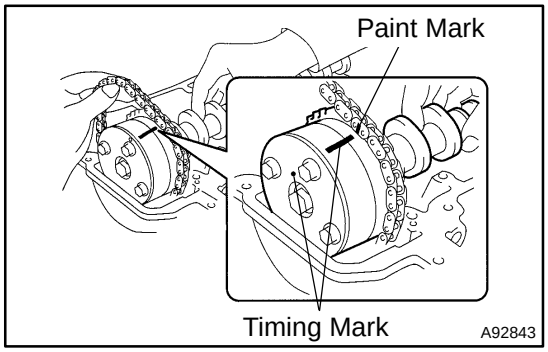

(t) Hold the chain as illustrated, then install the camshaft and camshaft timing gear assembly so that the paint mark of the chain and the timing mark of the camshaft timing gear assembly are aligned.

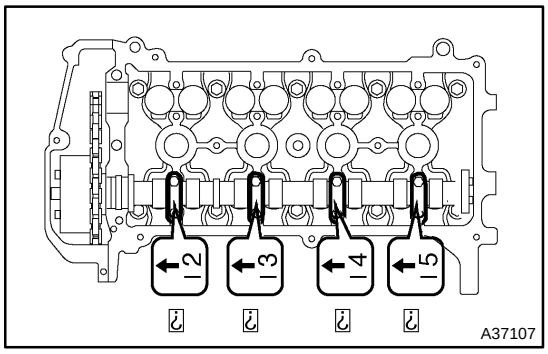

(u) Check the front marks and numbers on the bearing cap No. 2, then tighten the bolts uniformly in several steps in the sequence shown in the illustration.

Torque: 13 N·m (130 kgf·cm, 9.6 ft·lbf)

NOTICE:

Tighten the bolts uniformly keeping the camshaft level.

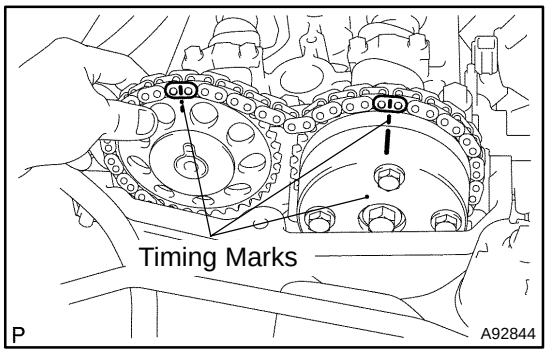

(v) Hold the chain as illustrated, then install the camshaft No. 2 and camshaft timing gear so that the paint mark of the chain and the timing mark of the camshaft timing gear are aligned.

(w) Align the knock pin of the camshaft No. 2 with the pin groove of the camshaft timing gear.

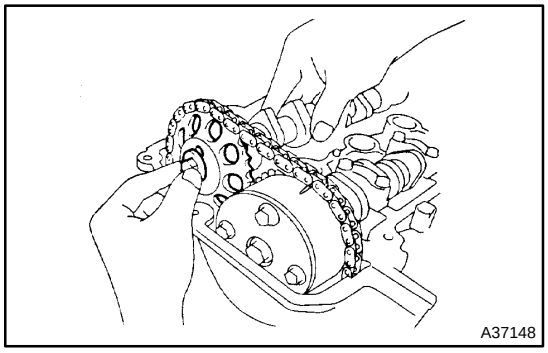

(x) Temporarily tighten the camshaft timing chain with the bolt.

cardiagn.com

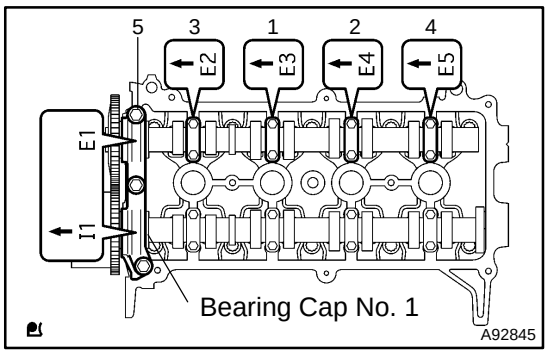

(y) Check the front marks and numbers on the bearing caps No. 1 and No. 2, then tighten the bolts uniformly in several steps in the sequence shown in the illustration.
Torque:
23 N·m (235 kgf·cm, 17 ft·lbf) for bearing cap No. 1
13 N·m (130 kgf·cm, 9.6 ft·lbf) for bearing cap No. 2

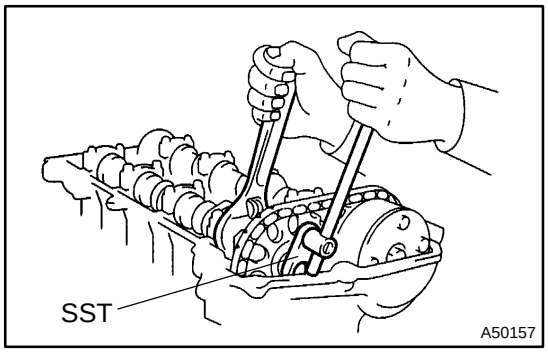

(z) Hold the hexagonal lobe of the camshaft No. 2 with the adjustable wrench.
(aa) Using SST, tighten the bolt.
SST 10514, 09023–38400
Torque: 64 N·m (650 kgf·cm, 47 ft·lbf)

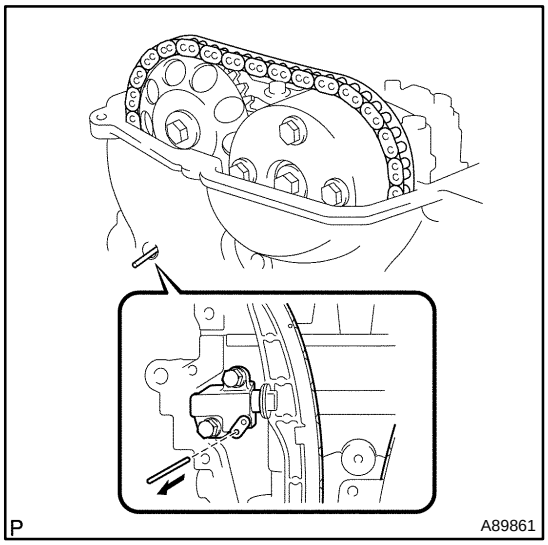

(ab) Remove the 3.0 mm (0.118 in.) diameter bar from the chain tensioner.

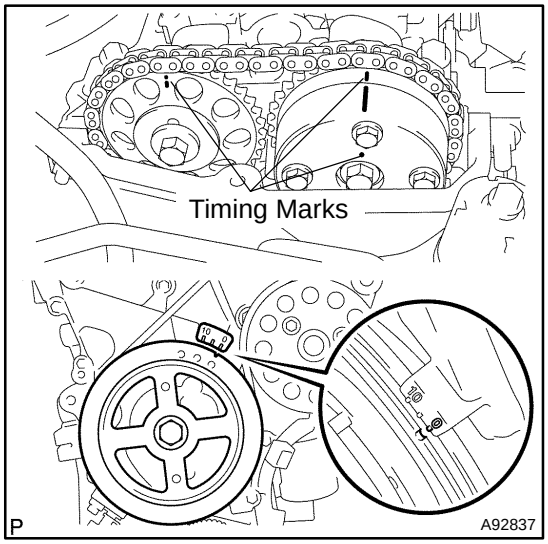

(ac) Turn the crankshaft damper clockwise, then align its timing mark notch with the timing mark ”0”.
(ad) Check that the timing marks are located as illustrated.

cardiagn.com

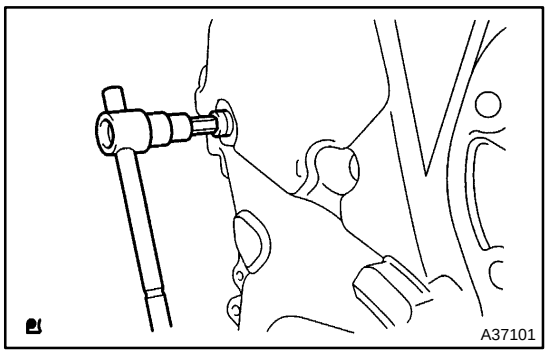

(ae) Apply adhesive to the 2 or 3 threads of the service hole screw plug bolt end.
Adhesive:
Part No. 08833–00070, THREE BOND 1324, or equivalent

NOTICE:
Remove any oil from the bolts and bolt holes.

(af) Using an 8 mm socket hexagon wrench, install the service hole screw plug.
Torque: 15 N·m (153 kgf·cm, 11 ft·lbf)

15. INSTALL CYLINDER HEAD COVER SUB–ASSY (See page 17–7)
16. INSTALL RESERVOIR BRACKET
Torque: 8.5 N·m (87 kgf·cm, 75 in.·lbf)
17. INSTALL BRAKE MASTER CYLINDER RESERVOIR SUB–ASSY
Torque: 8.5 N·m (87 kgf·cm, 75 in.·lbf)
18. INSTALL AIR CLEANER ASSY
Torque:
7.0 N·m (71 kgf·cm, 62 in.·lbf) for bolt
3.0 N·m (31 kgf·cm, 27 in.·lbf) for clamp
19. INSTALL COWL TOP PANEL SUB–ASSY OUTER FRONT (See page 11–15)
20. INSTALL WINDSHIELD WIPER LINK ASSY (See page 66–14)
21. CHECK FOR ENGINE OIL LEAKS
22. INSTALL RADIATOR SUPPORT OPENING COVER
23. INSTALL ENGINE UNDER COVER RH
24. CONNECT BATTERY NEGATIVE TERMINAL
Torque: 6.0 N·m (61 kgf·cm, 53 in.·lbf)
25. INSTALL REAR FLOOR BOARD NO.3
26. INSTALL DECK FLOOR BOX REAR
27. INSTALL REAR FLOOR BOARD NO.2
28. POWER WINDOW CONTROL SYSTEM INITIALIZE (See page 01–5)

cardiagn.com

PARTIAL ENGINE ASSY (1NZ–FXE)

COMPONENTS

141ON–01

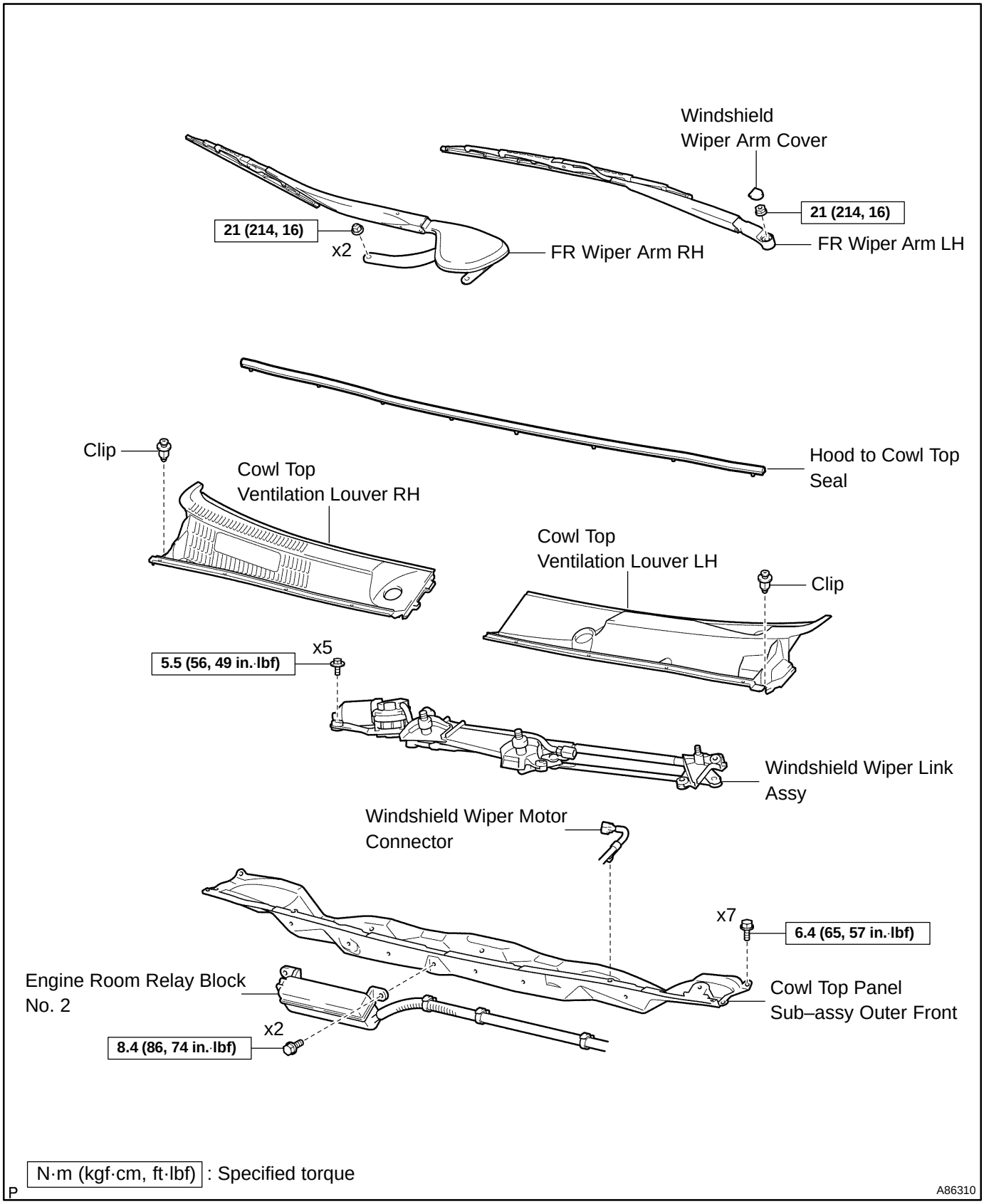

cardiagn.com

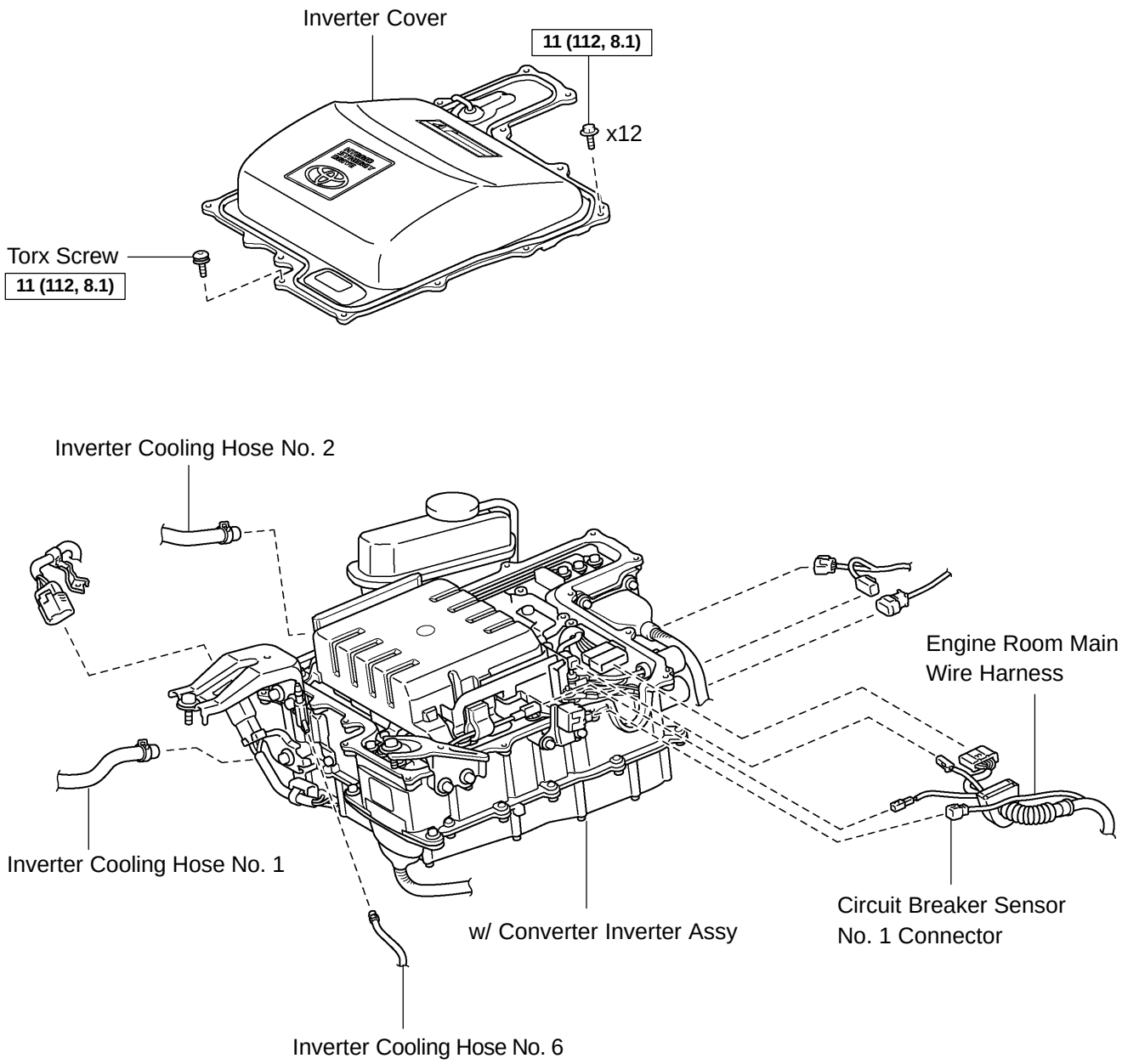

N·m (kgf·cm, ft·lbf): Specified torque

A92987

cardiagn.com

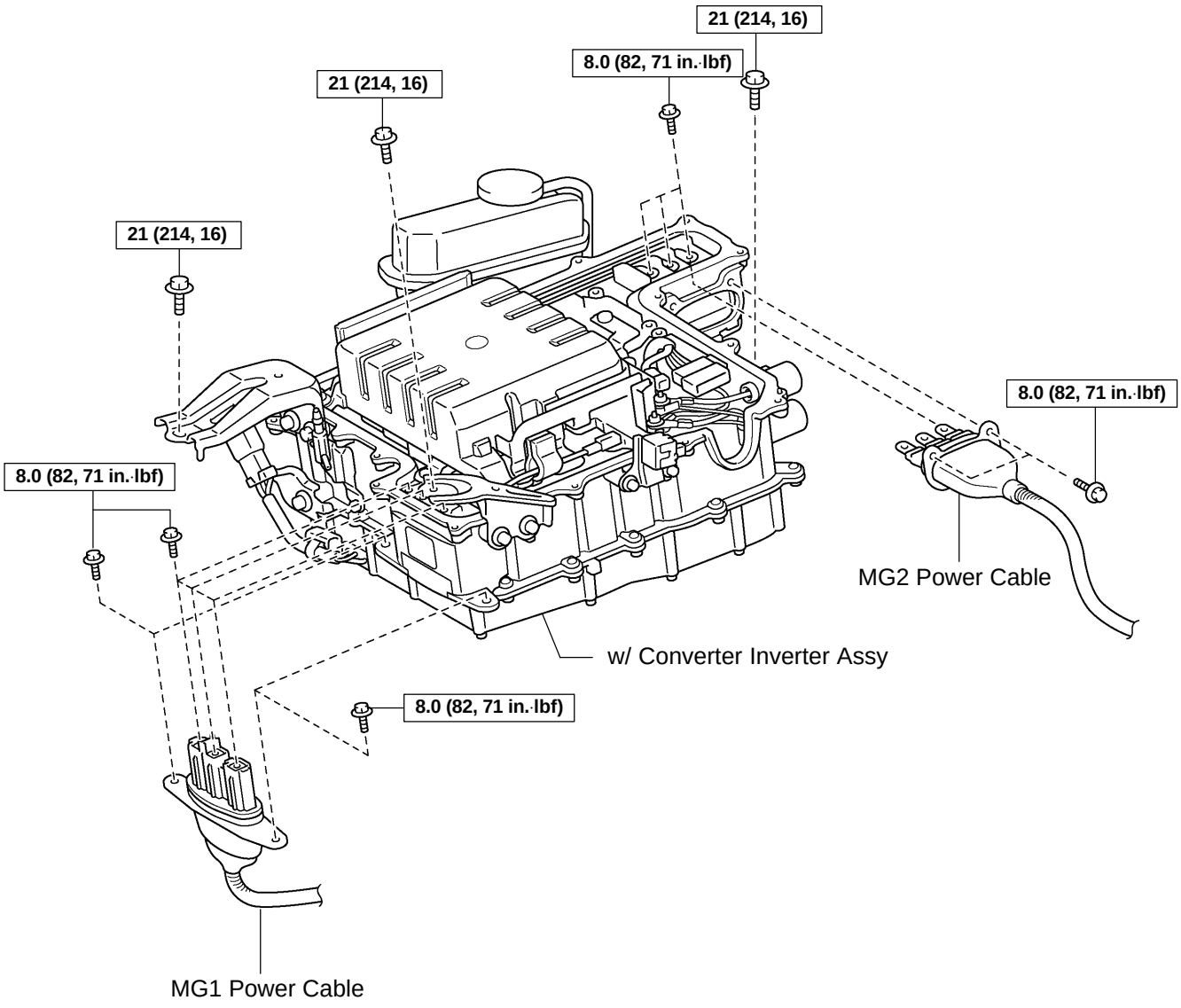

H N·m (kgf·cm, ft·lbf): Specified torque

A83631

cardiagn.com

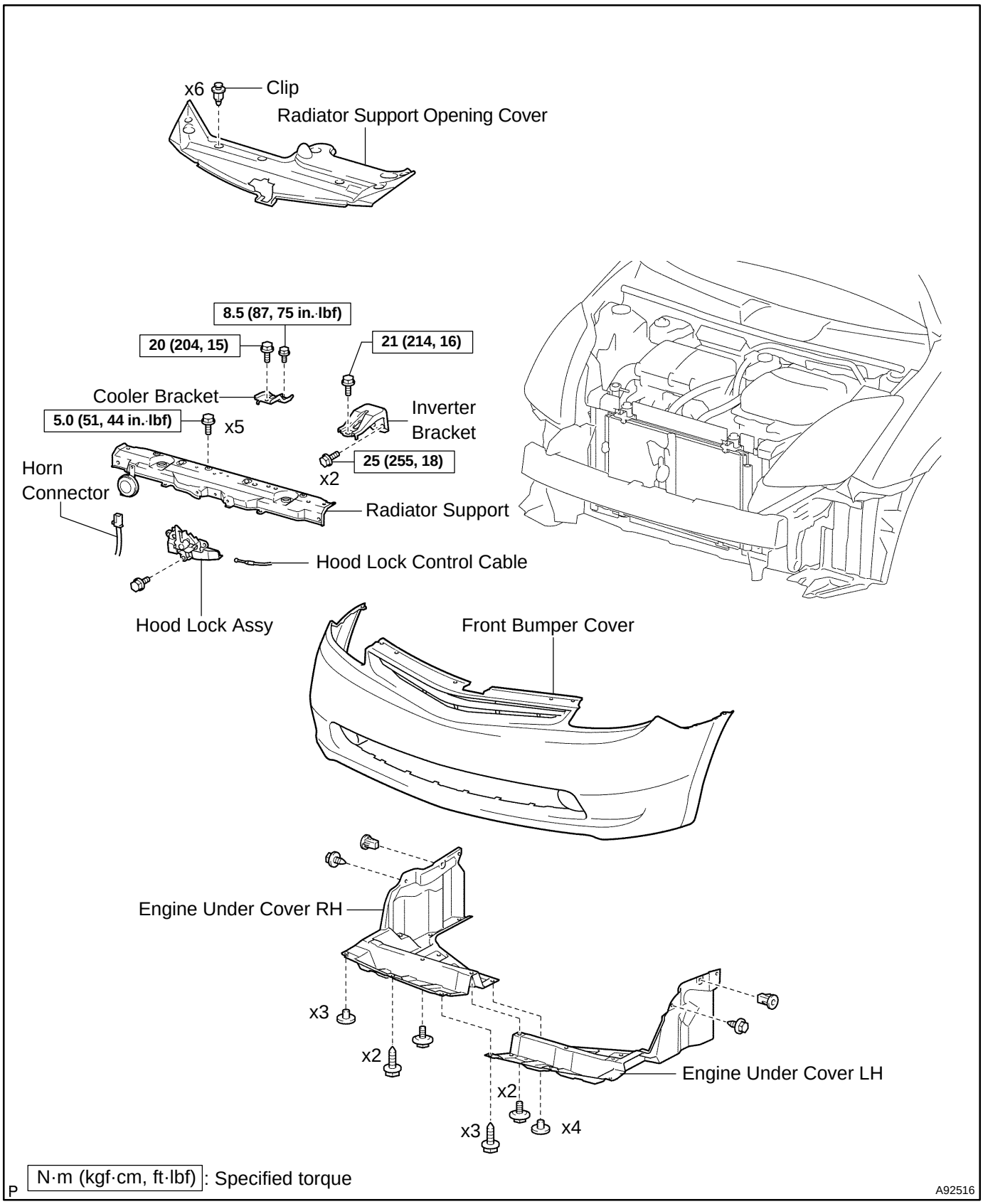

cardiagn.com

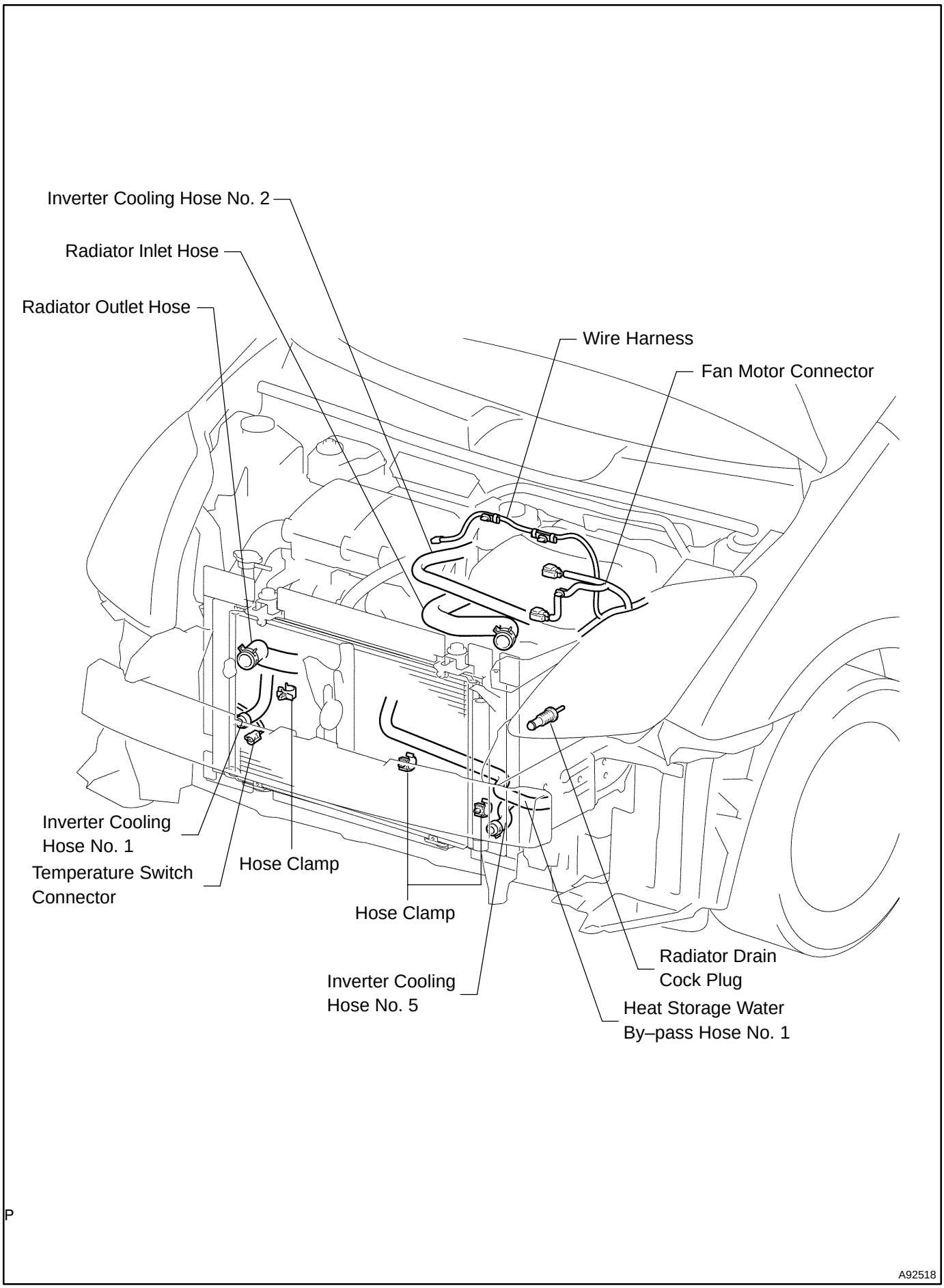

cardiagn.com

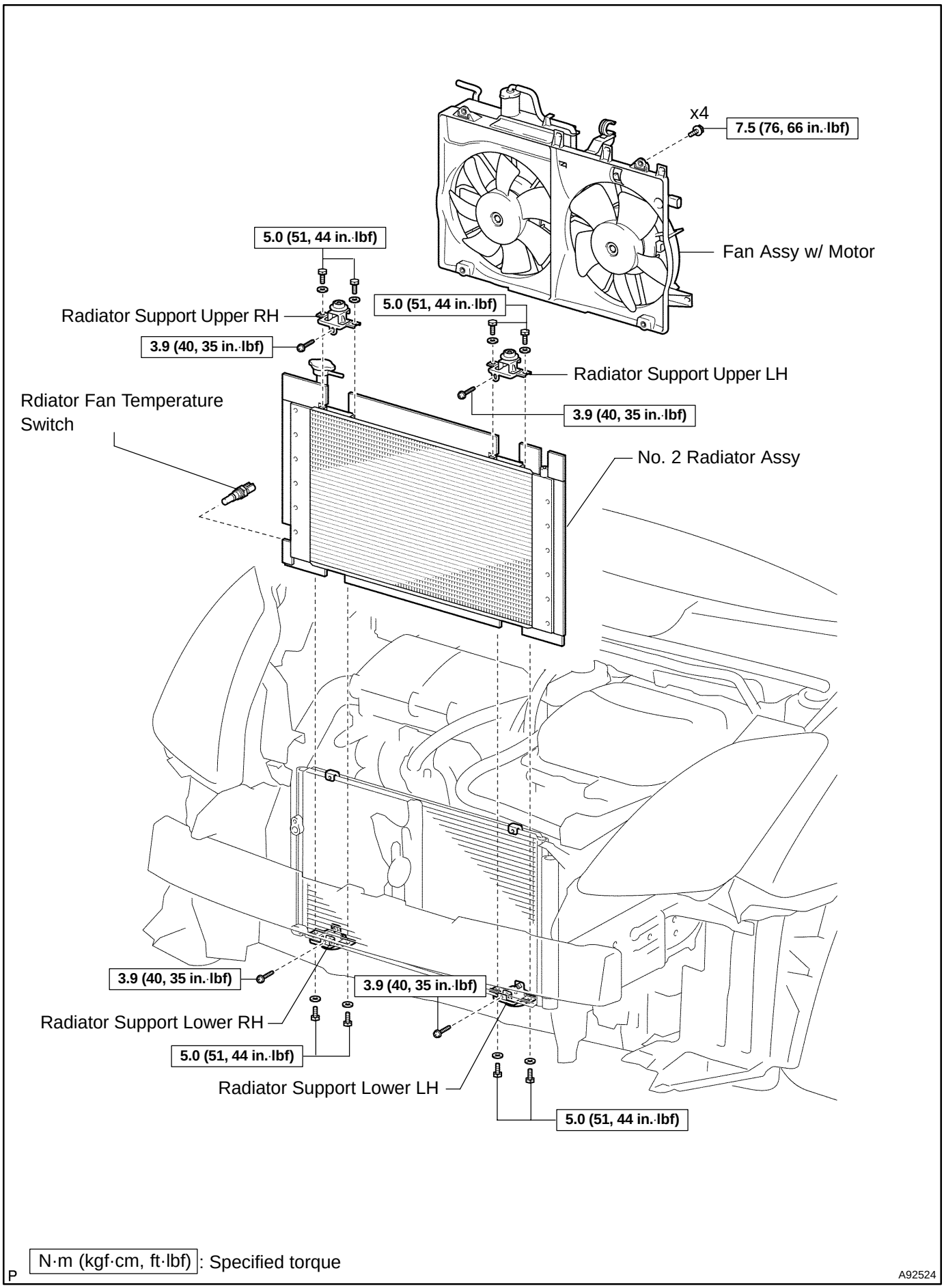

cardiagn.com

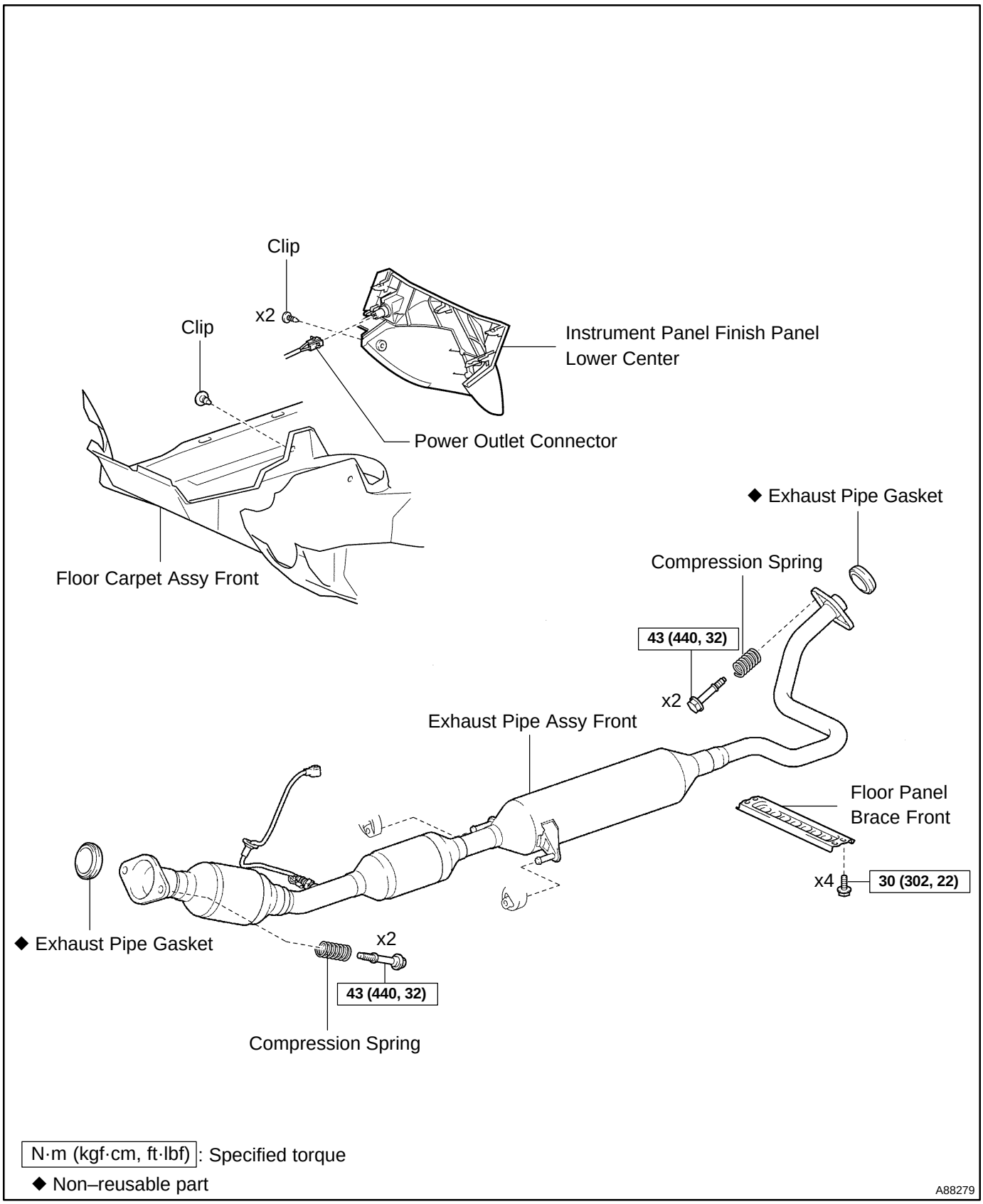

cardiagn.com

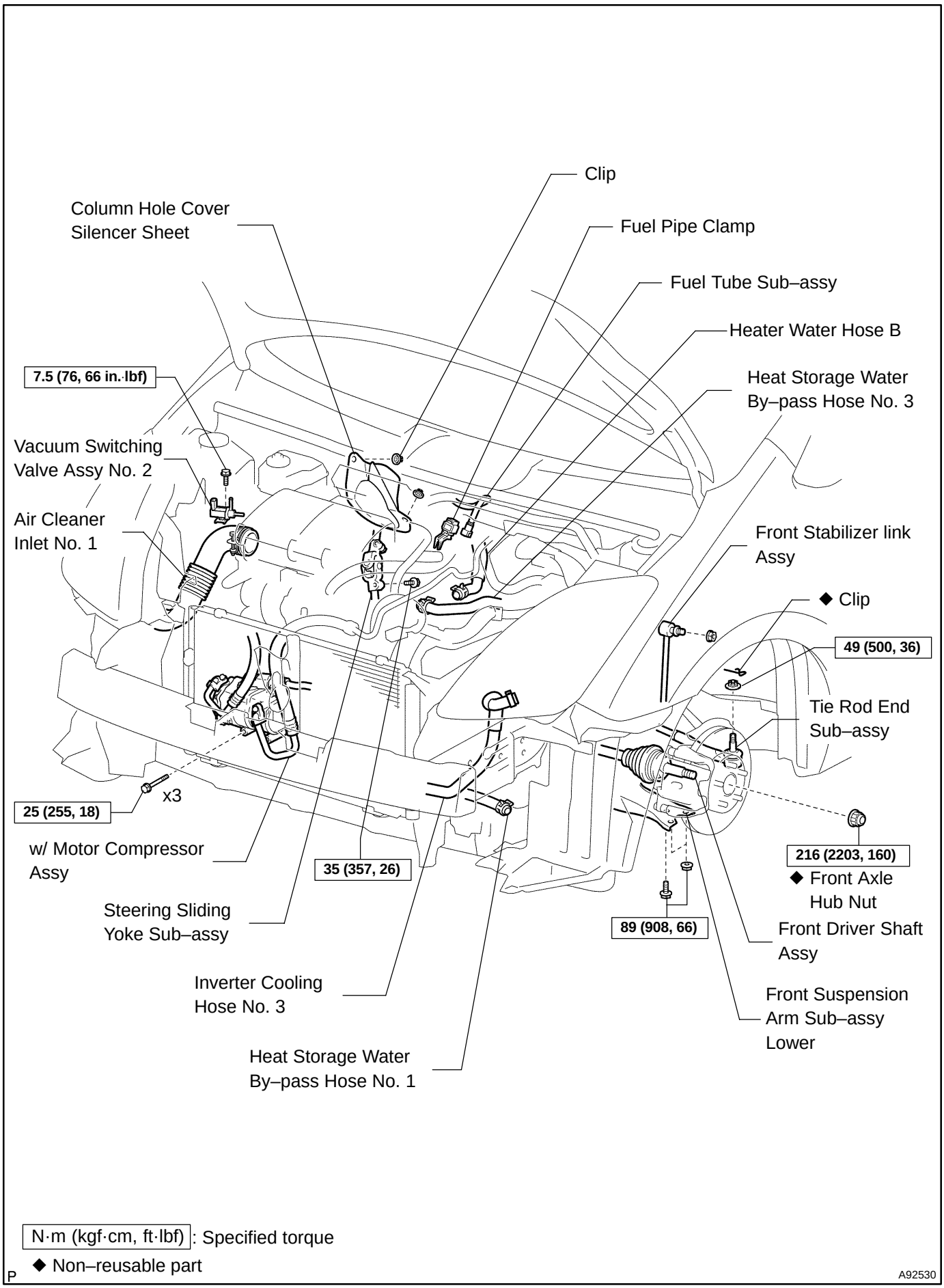

cardiagn.com

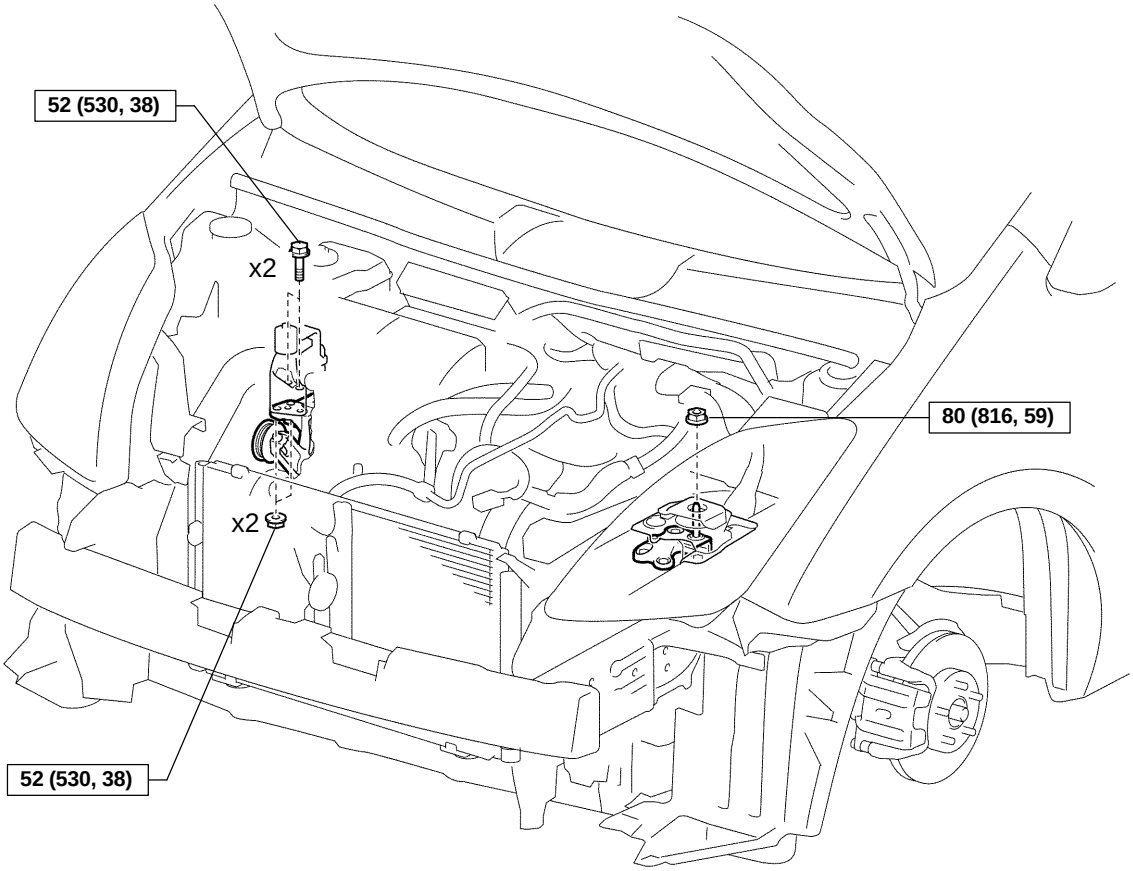

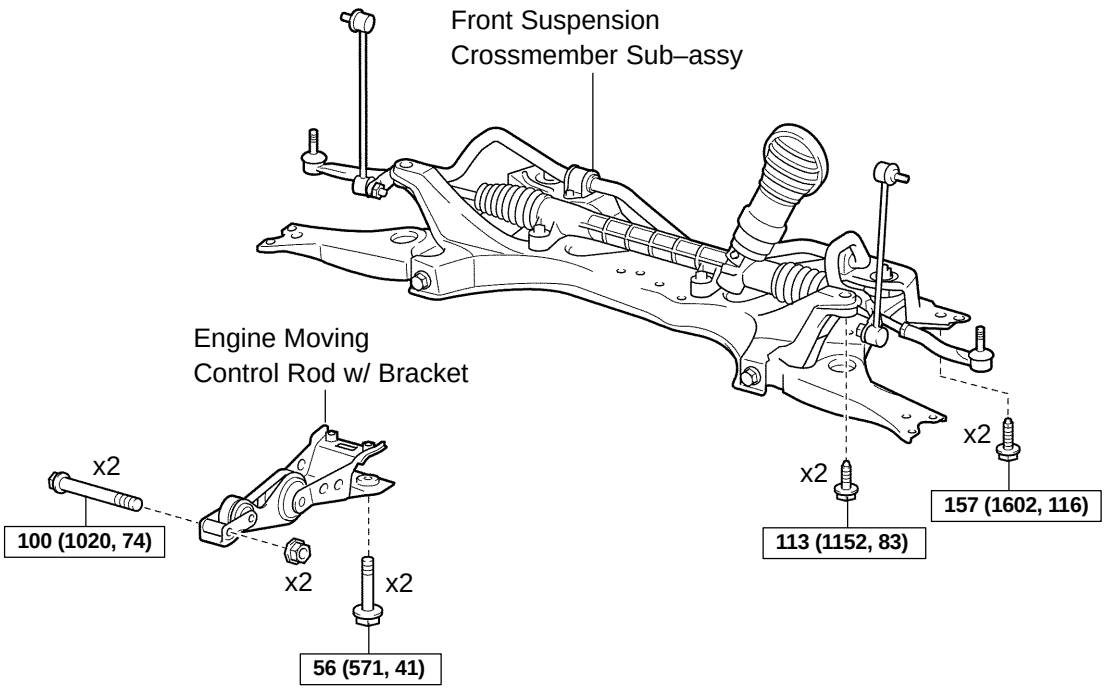

P N·m (kgf·cm, ft·lbf): Specified torque

A88666

cardiagn.com

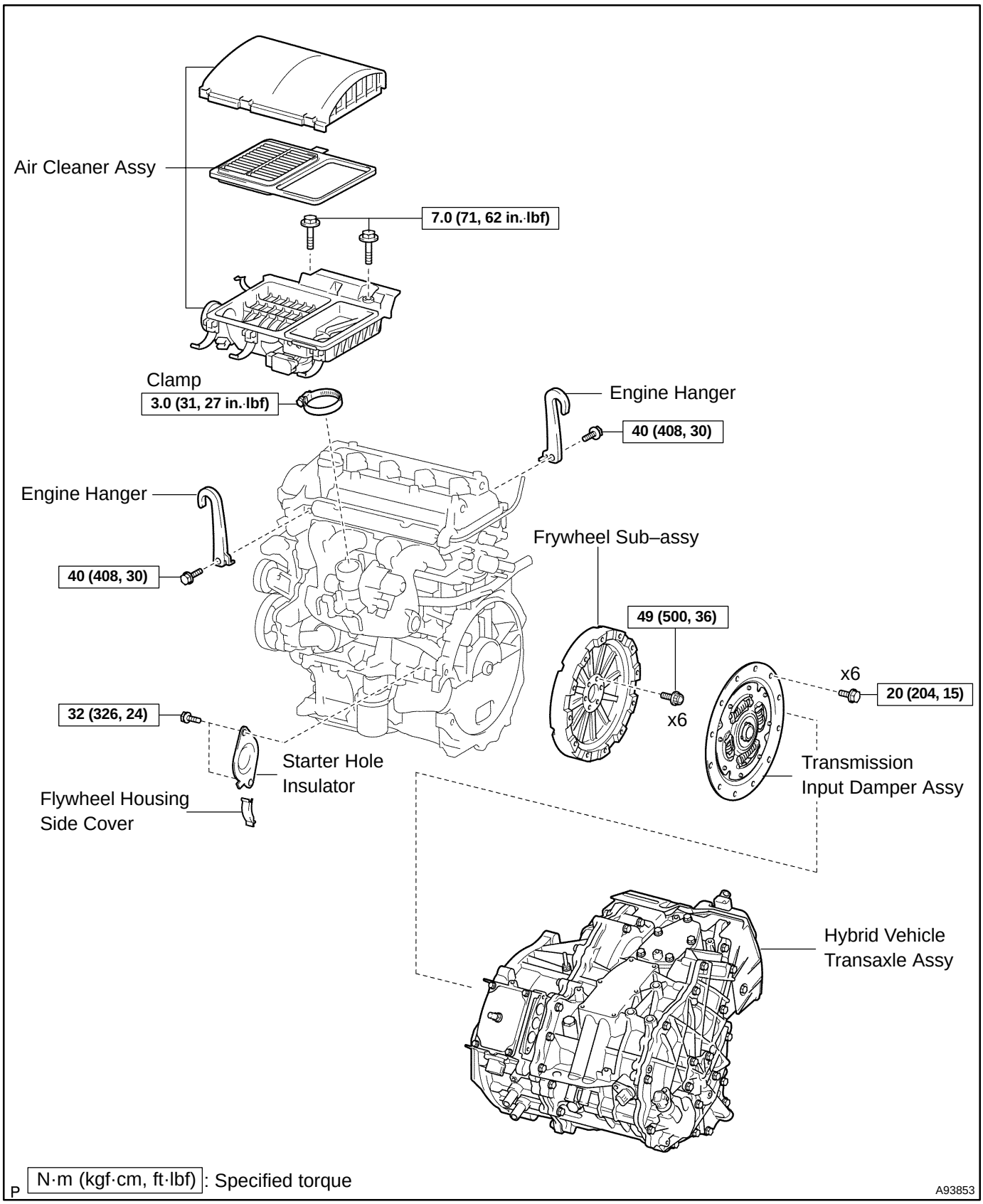

cardiagn.com

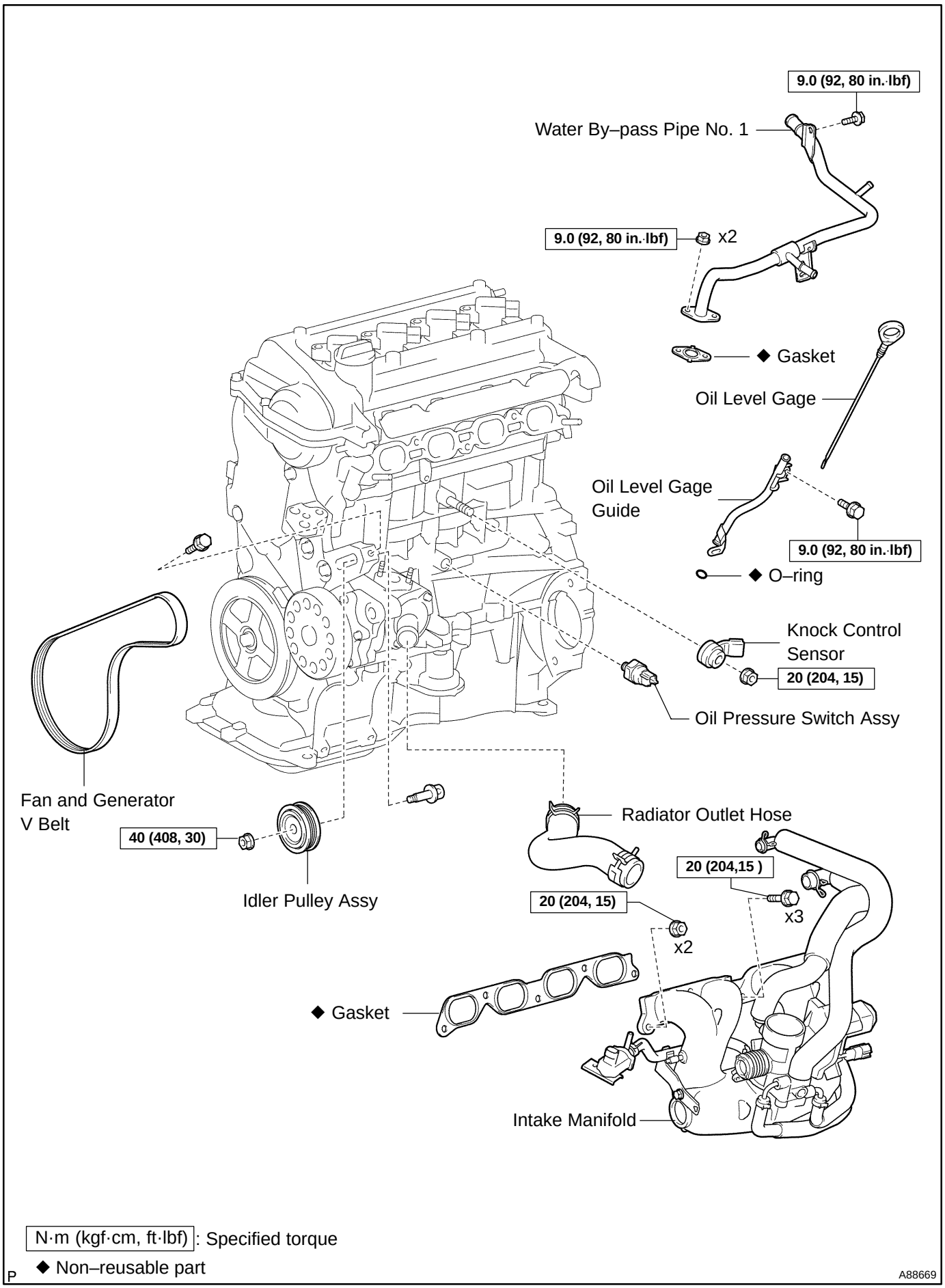

cardiagn.com

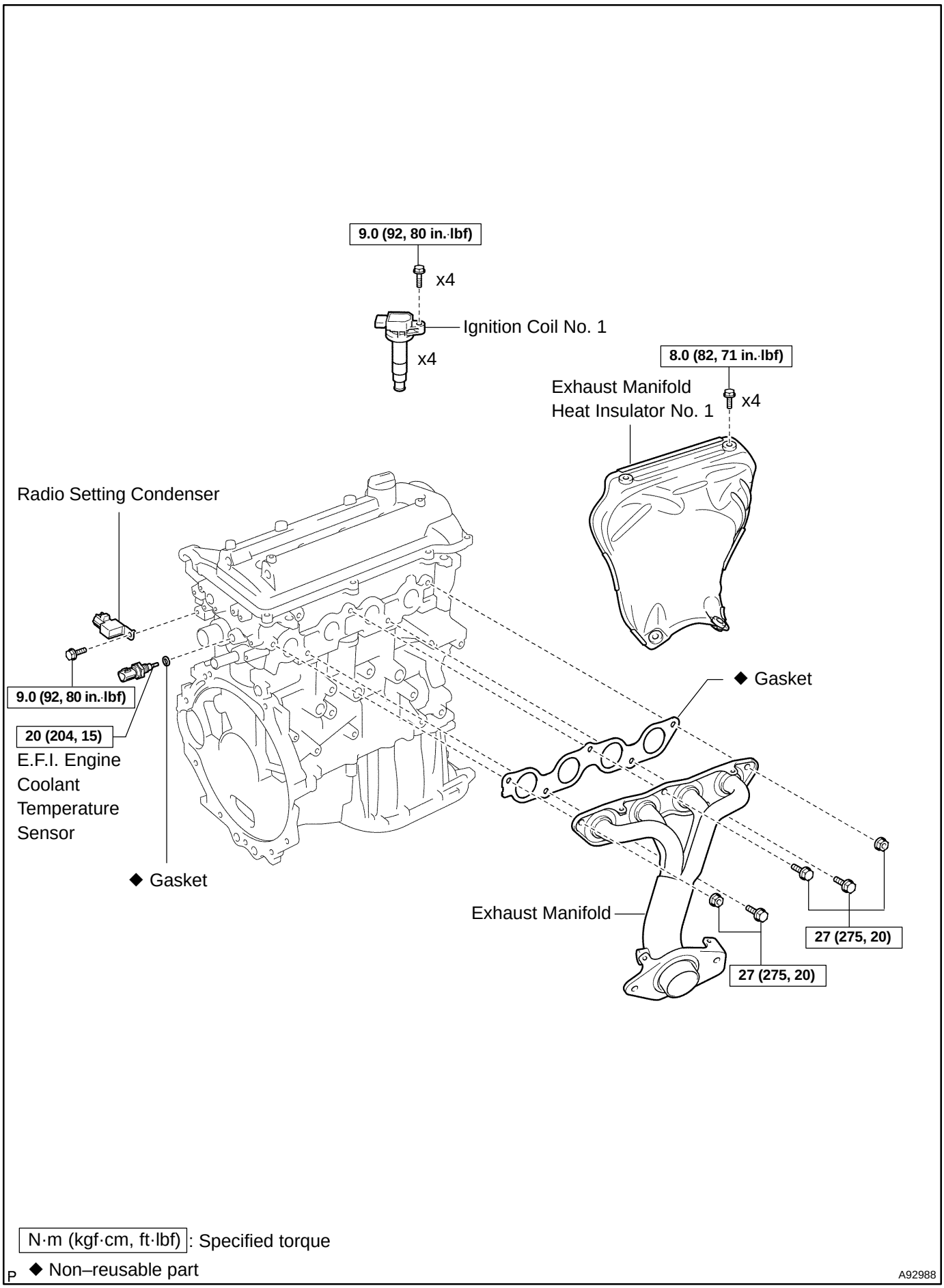

cardiagn.com

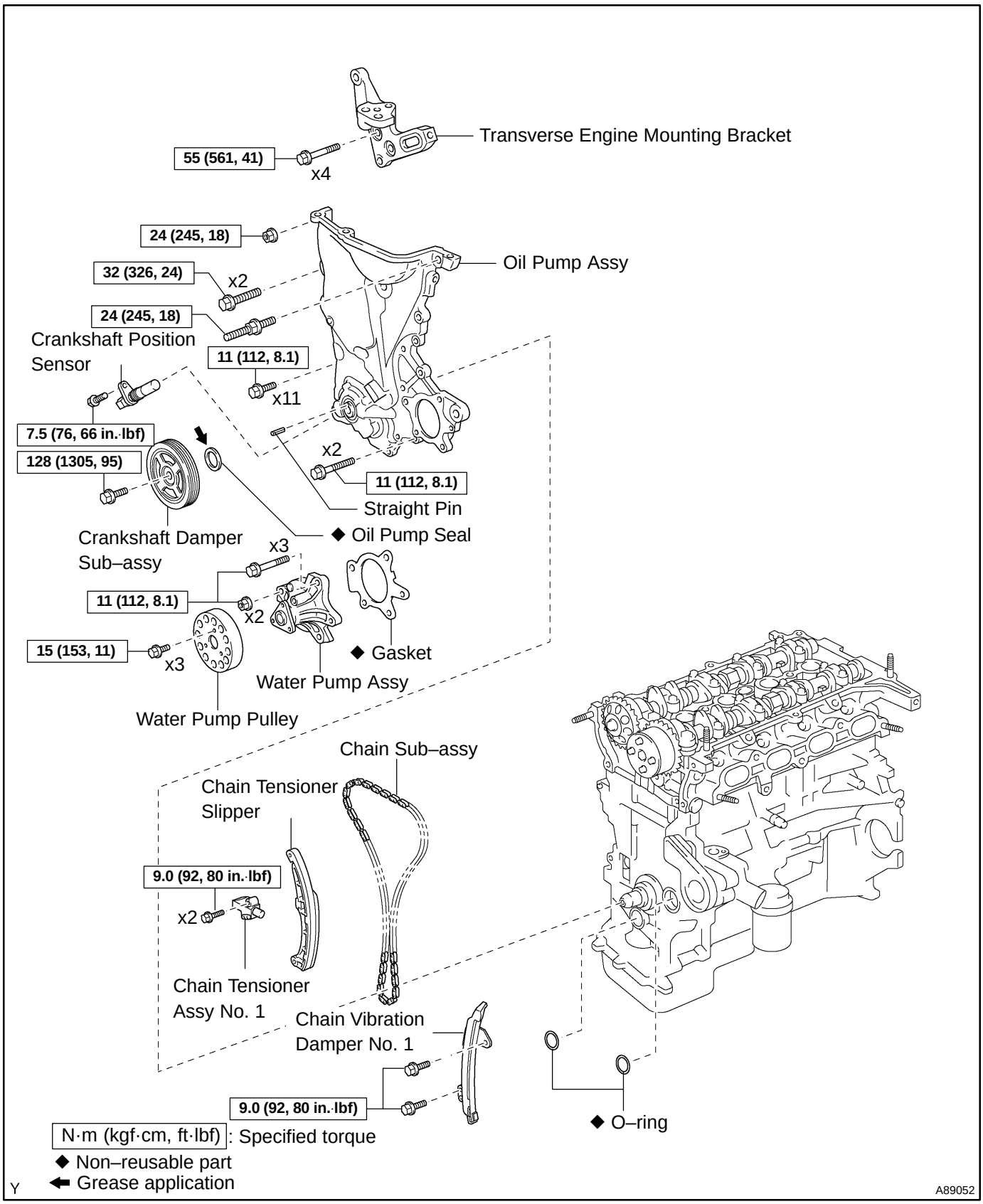

cardiagn.com

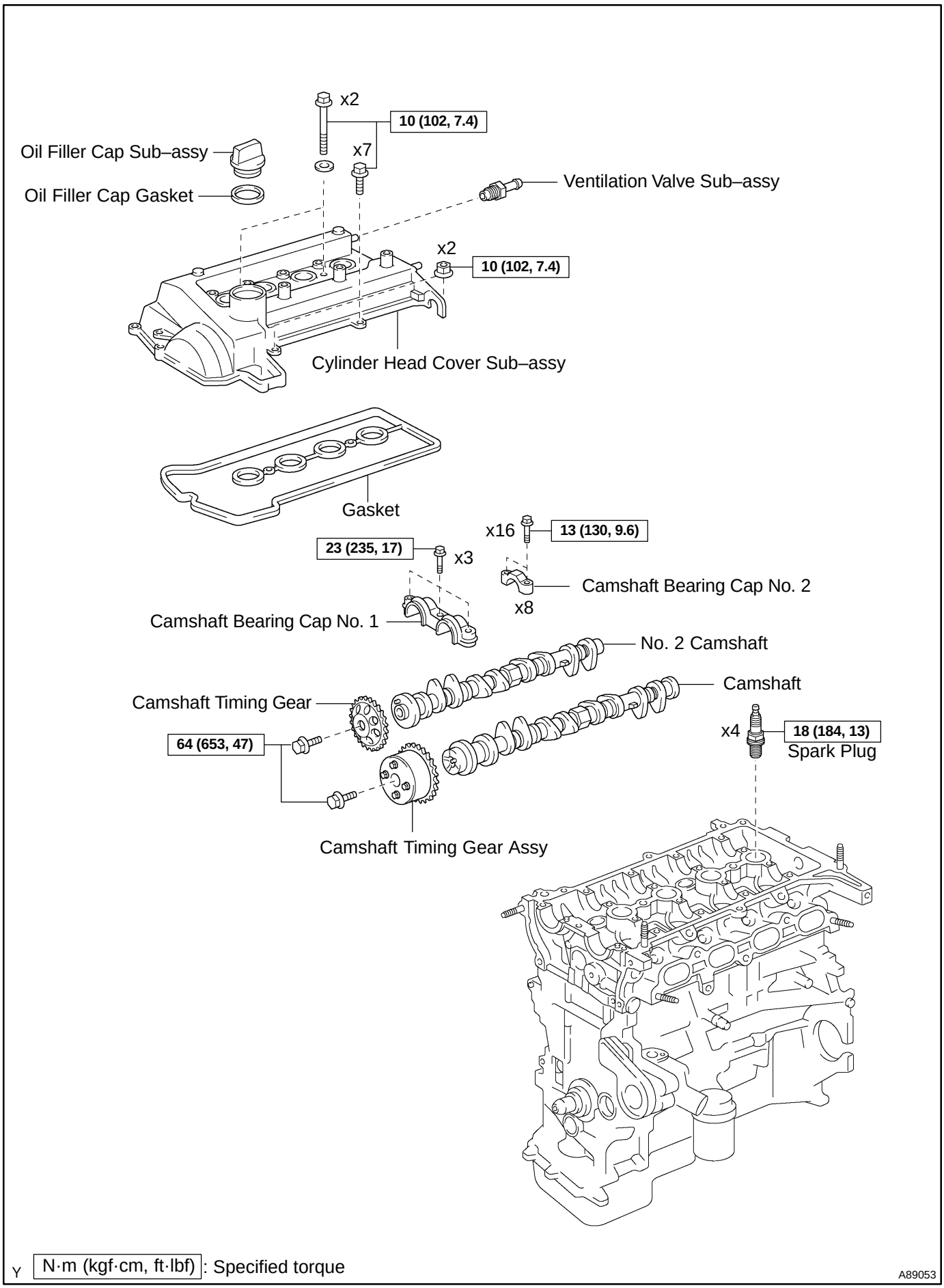

cardiagn.com

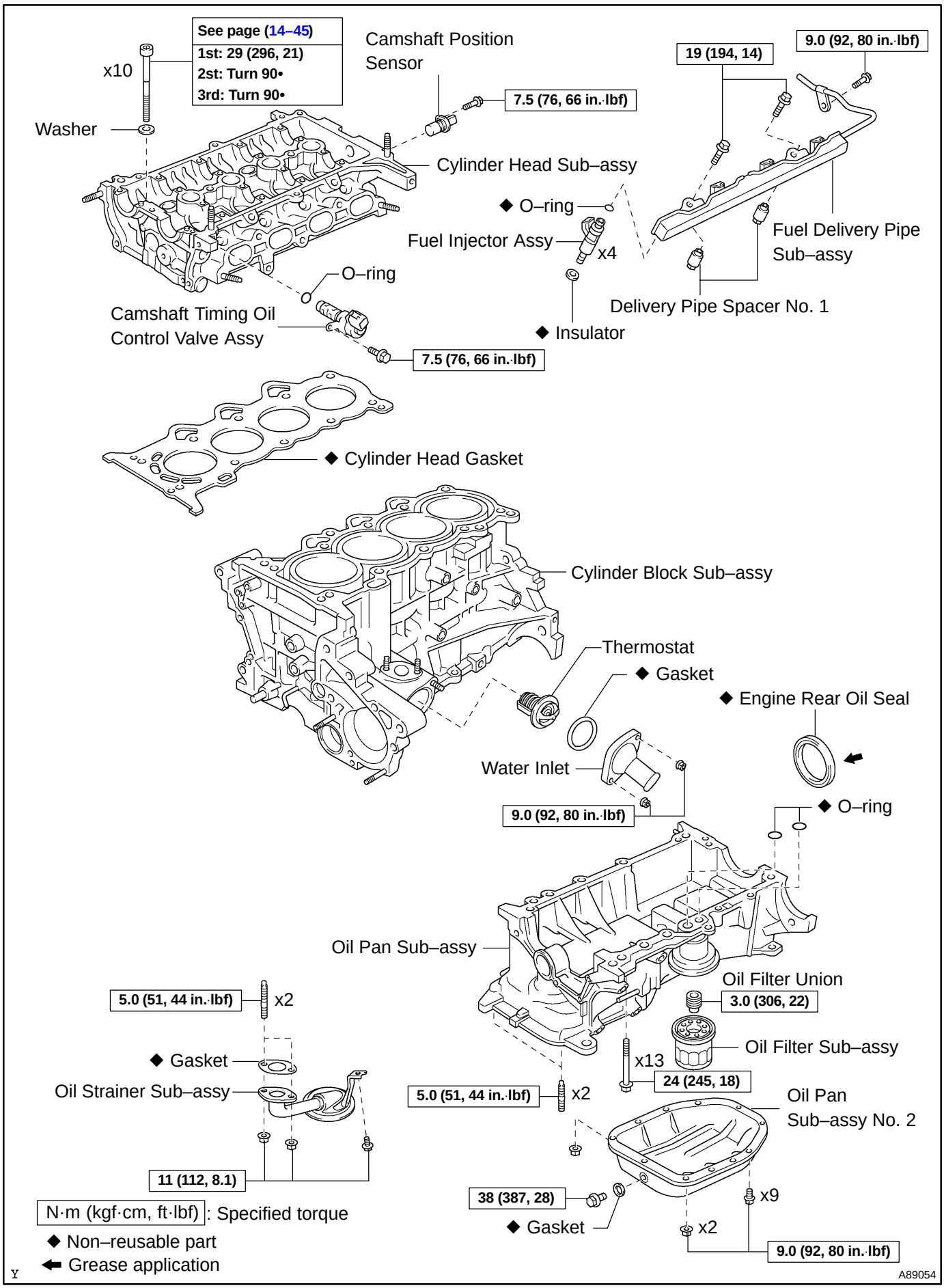

cardiagn.com

141OO–01

REPLACEMENT

1. REMOVE DISCHARGE FUEL SYSTEM PRESSURE (See page 11–3)
2. PRECAUTION (See page 21–7)
3. REMOVE REAR FLOOR BOARD NO.2 (See page 21–116)
4. REMOVE DECK FLOOR BOX REAR (See page 21–116)
5. REMOVE REAR FLOOR BOARD NO.3 (See page 21–116)
6. DISCONNECT BATTERY NEGATIVE TERMINAL (See page 21–116)
7. REMOVE SERVICE PLUG GRIP (See page 21–116)
8. REMOVE FRONT WHEELS
9. REMOVE ENGINE UNDER COVER LH
10. REMOVE ENGINE UNDER COVER RH
11. DRAIN ENGINE COOLANT
(a) Drain engine coolant in the radiator on the engine side (see page 16–11).
(b) Drain engine coolant in the radiator on the hybrid side (see page 22–4).
12. DRAIN TRANSAXLE OIL (See page 22–1)
13. REMOVE WINDSHIELD WIPER LINK ASSY (See page 66–14)
14. REMOVE COWL TOP PANEL SUB–ASSY OUTER FRONT (See page 11–15)
15. REMOVE W/CONVERTER INVERTER ASSY (See page 21–23)
16. REMOVE NO.2 RADIATOR ASSY (See page 16–33)

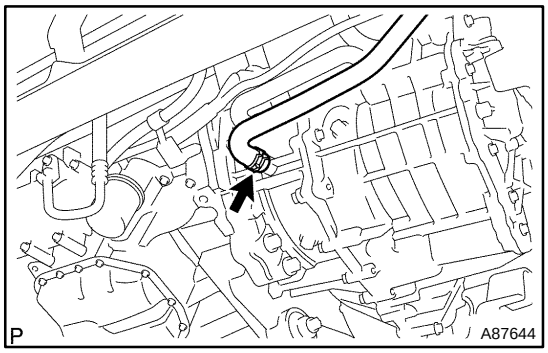

17. DISCONNECT INVERTER COOLING HOSE NO.3
(a) Disconnect the inverter cooling hose No. 3.

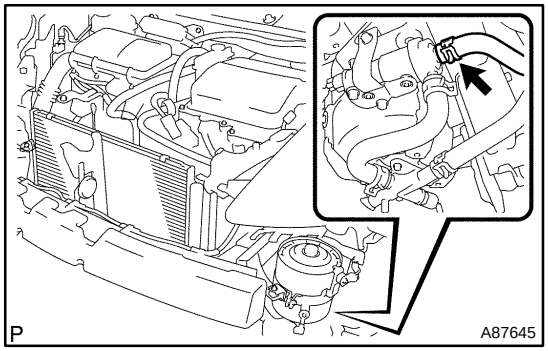

18. DISCONNECT HEAT STRAGE WATER BY–PASS HOSE NO.1
(a) Disconnect the hose shown in the illustration.

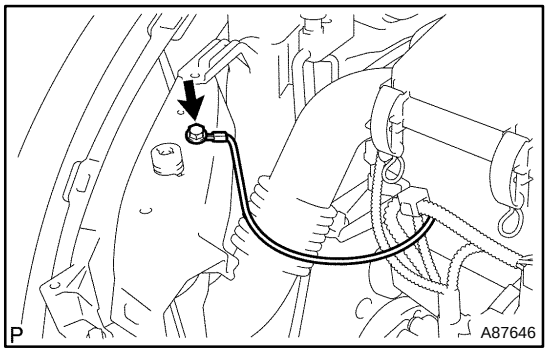

19. DISCONNECT ENGINE WIRE
(a) Remove the bolt, then disconnect the ground cable.

cardiagn.com

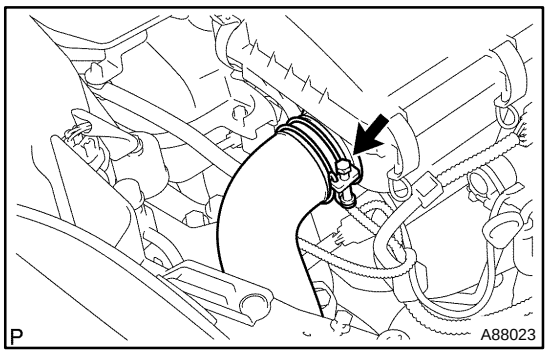

20. SEPARATE AIR CLEANER INLET NO.1

(a) Loosen the clamp, then disconnect the air cleaner inlet No. 1 from the air cleaner case.

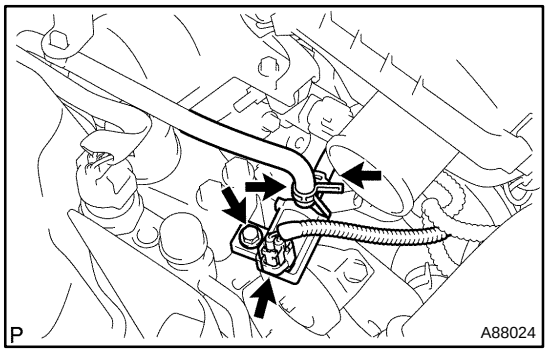

21. REMOVE VACUUM SWITCHING VALVE ASSY NO.2

(a) Disconnect the connector and hose.

(b) Remove the bolt, then remove the vacuum switching valve assembly.

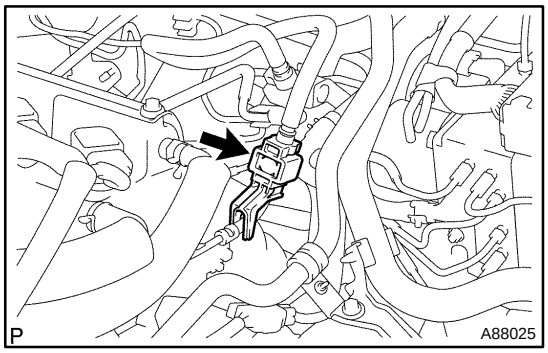

22. DISCONNECT FUEL TUBE SUB–ASSY

(a) Remove the fuel pipe clamp.

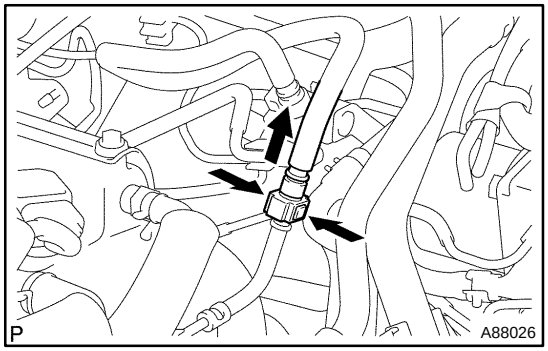

(b) Disconnect the fuel tube from the fuel delivery pipe.

NOTICE:

Even if the fuel tube is stuck and cannot be disconnected, do not use any tools. Push and pull the part with the quick connecter pinched to disconnect.

(c) Cover the disconnected fuel tube and fuel delivery pipe with a vinyl bag in order to prevent foreign object from being introduced.

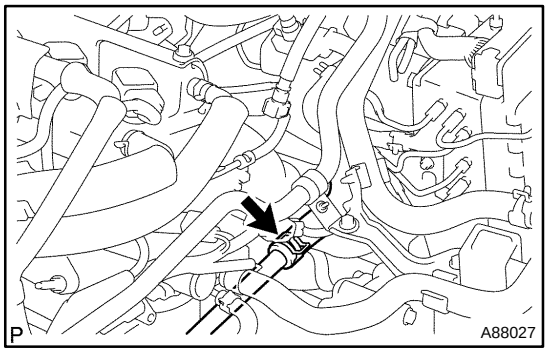

23. DISCONNECT HEATER WATER HOSE B

(a) Disconnect the heater water hose B.

cardiagn.com

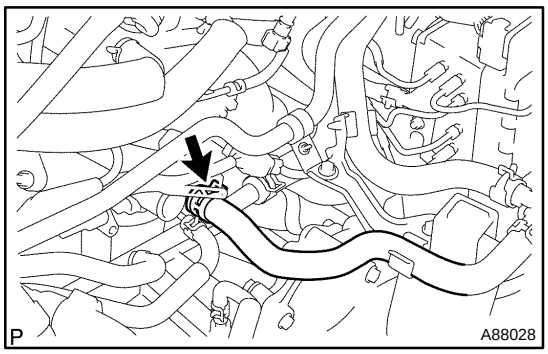

24. DISCONNECT HEAT STRAGE WATER BY–PASS HOSE NO.3

(a) Disconnect the heat storage water by–pass hose No. 3.

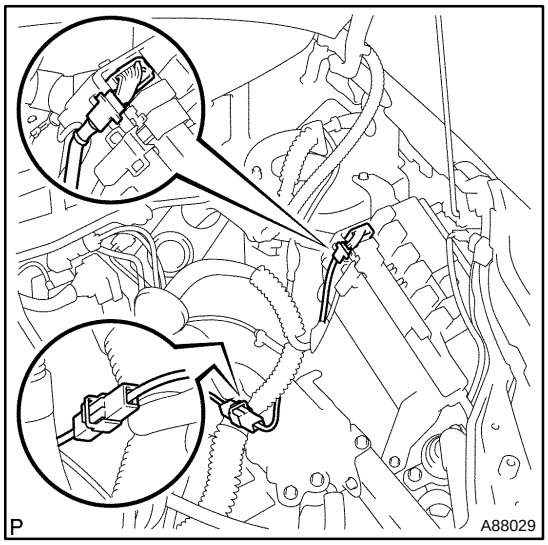

25. DISCONNECT ENGINE WIRE

(a) Disconnect the connector from the ECM, then pull the engine wire harness to the engine compartment side (see page 10–24).

NOTICE:

Do not forcibly pull the engine wire harness to the engine compartment side.

(b) Disconnect the harness and harness clamp from the engine room main relay block.

(c) Disconnect the ground cable.

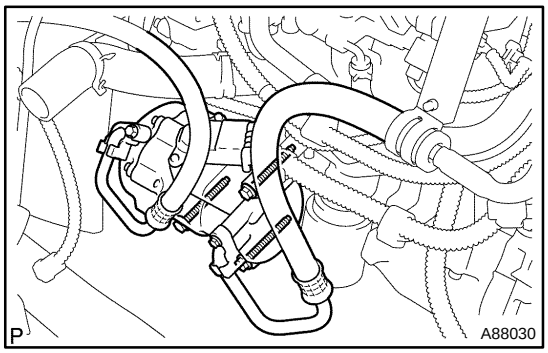

26. SEPARATE W/MOTOR COMPRESSOR ASSY

(a) Disconnect the wire harness of the compressor assembly from the harness clamp.

(b) Remove the 3 bolts, then disconnect the compressor assembly.

HINT:

Disconnect the compressor assembly together with the low–pressure and high–pressure hoses, then secure it to the vehicle side with rope.

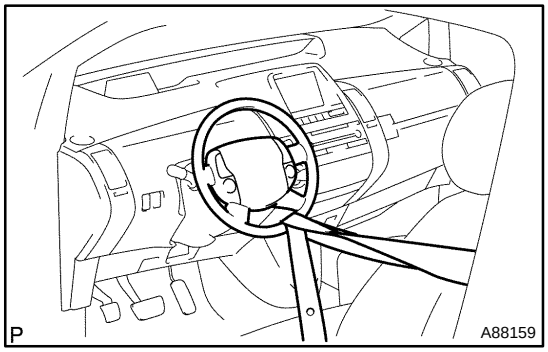

27. SEPARATE STEERING SLIDING YOKE SUB–ASSY

(a) Install the seat belt as illustrated so that the steering wheel does not turn.

HINT:

It prevents open circuit of the spiral cable.

cardiagn.com

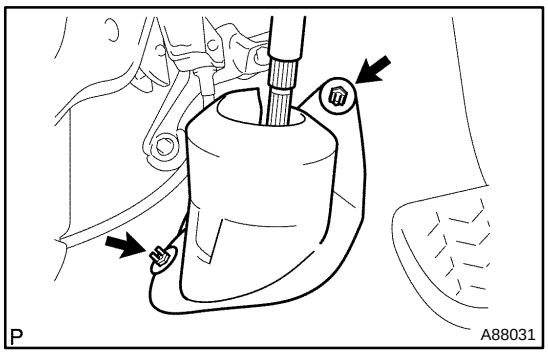

(b) Remove the 2 clips, then remove the column hole cover silencer sheet.

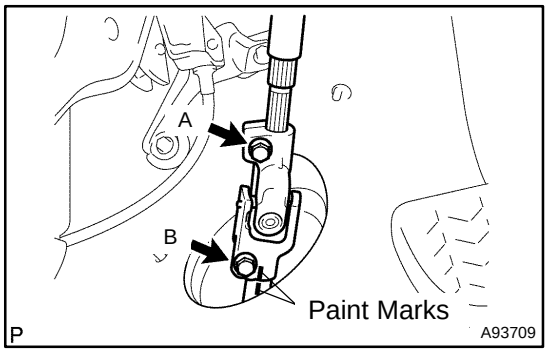

(c) Loosen the bolt on the column side (A) of the sliding yoke.
(d) Remove the bolt on the gear side (B) of the sliding yoke.
(e) Put paint marks on the sliding yoke and intermediate shaft, then disconnect the sliding yoke.

28. REMOVE EXHAUST PIPE ASSY FRONT (See page 11–24)
29. REMOVE FRONT AXLE HUB LH NUT (See page 30–7)
30. REMOVE FRONT AXLE HUB RH NUT
HINT:
Remove it in the same procedure as the LH side.
31. REMOVE FRONT STABILIZER LINK ASSY (See page 30–7)
32. SEPARATE TIE ROD END SUB–ASSY LH (See page 30–7)
33. SEPARATE TIE ROD END SUB–ASSY RH
HINT:
Separate it in the same procedure as the LH side.
34. SEPARATE FRONT SUSPENSION ARM SUB–ASSY LOWER NO.1 LH (See page 30–7)
35. SEPARATE FRONT SUSPENSION ARM SUB–ASSY LOWER NO.1 RH
HINT:
Separate it in the same procedure as the LH side.
36. SEPARATE FRONT AXLE ASSY LH (See page 30–7)
37. SEPARATE FRONT AXLE ASSY RH
HINT:
Separate it in the same procedure as the LH side.
38. REMOVE FRONT DRIVE SHAFT ASSY LH (See page 30–7)
39. REMOVE FRONT DRIVE SHAFT ASSY RH (See page 30–7)

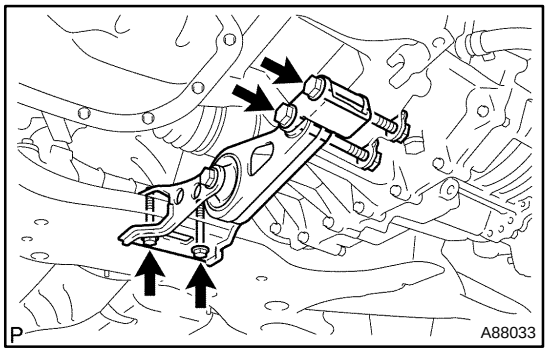

40. REMOVE FRONT SUSPENSION CROSSMEMBER SUB–ASSY
(a) Remove the 4 bolts and 2 nuts, then remove the engine moving control rod with bracket.

cardiagn.com

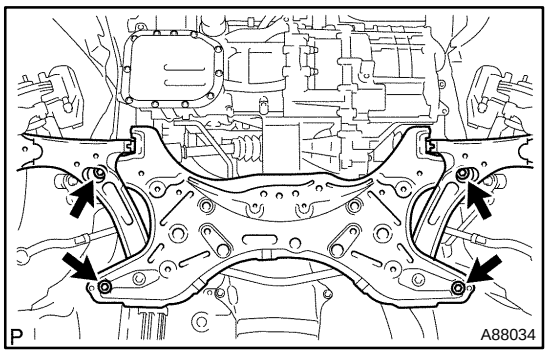

(b) Remove the 4 bolts, then remove the front suspension crossmember with power steering gear assembly.

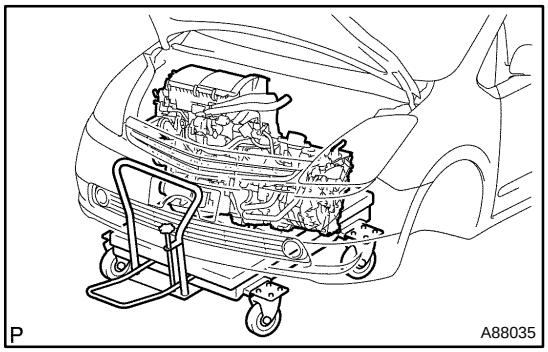

41. REMOVE ENGINE ASSEMBLY WITH TRANSAXLE

(a) Set the engine lifter as illustrated.

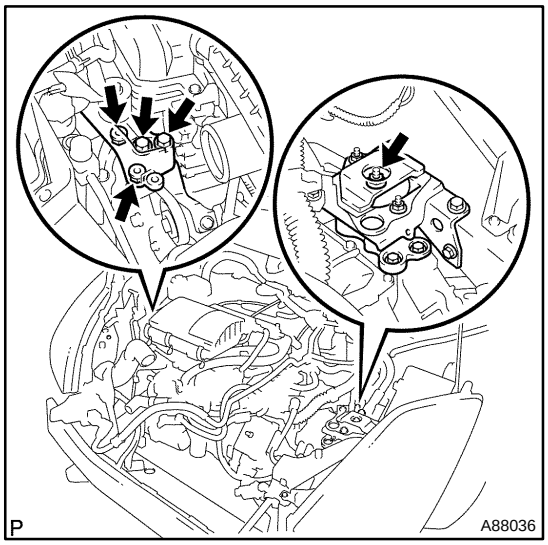

(b) Remove the 2 bolts and 2 nuts, then disconnect the engine mounting bracket RH and engine mounting insulator RH.

(c) Remove the nut, then disconnect the engine mounting insulator bracket LH and engine mounting insulator LH.

(d) Operate the engine lifter, then remove the engine assembly with transaxle from the vehicle.

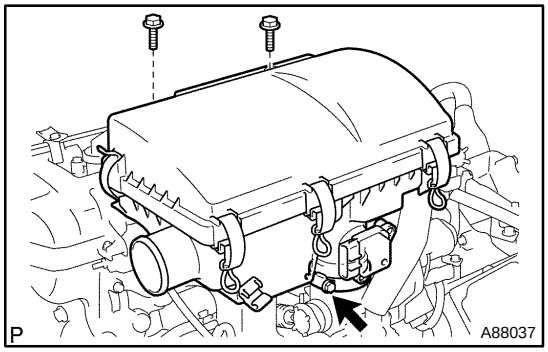

42. REMOVE AIR CLEANER ASSY

(a) Disconnect the intake air flow meter connector and wire harness clamp.

(b) Loosen the clamp, then remove the 2 bolts and air cleaner assembly.

cardiagn.com

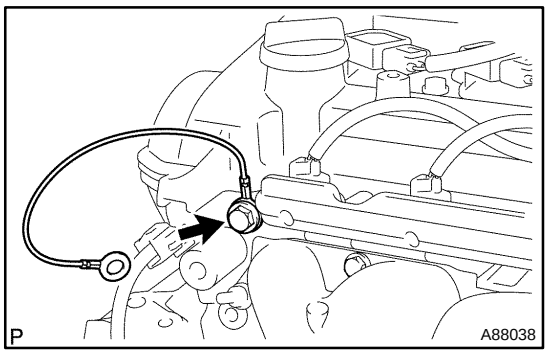

43. REMOVE HYBRID VEHICLE TRANSAXLE ASSY

(a) Remove the bolt and ground cable.

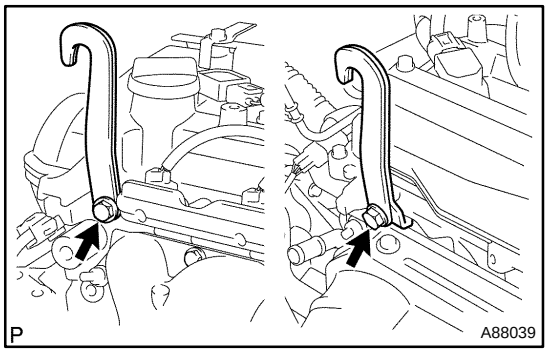

(b) Install the engine hanger as illustrated.
Torque: 40 N·m (408 kgf·cm, 30 ft·lbf)

NOTICE:
Be sure to use new bolts to install the engine hanger.

HINT:
- Engine hanger 12281–21010
- Bolt 91642–81052

(c) Using a chain block and engine sling device, hold the engine assembly with transaxle.

(d) Remove the engine wire harness from the engine assembly with transaxle.

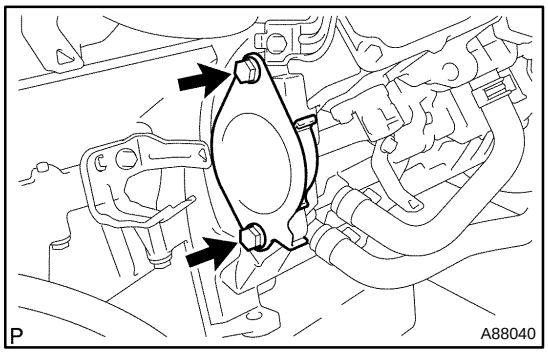

(e) Remove the 2 bolts, then remove the starter hole insulator and flywheel housing side cover.

(f) Remove the hybrid vehicle transaxle assembly from the engine assembly (see page 22–11).

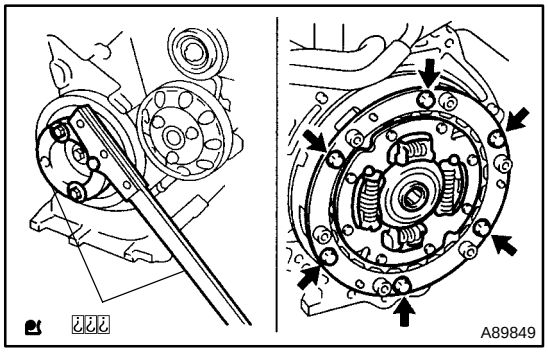

44. REMOVE TRANSMISSION INPUT DAMPER ASSY

(a) Using SST, hold the crankshaft.
SST 09213–58013 (91111–50845), 09330–00021

(b) Remove the 6 bolts, then remove the input damper and input damper cover.

cardiagn.com

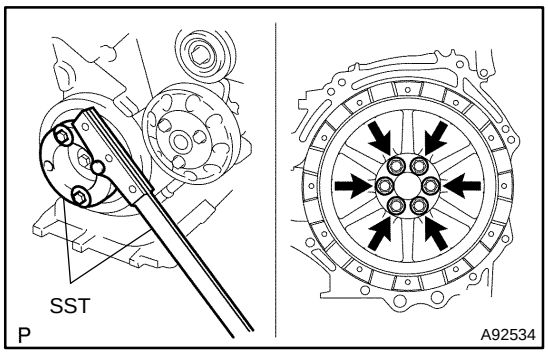

45. REMOVE FLYWHEEL SUB–ASSY

(a) Using SST, hold the crankshaft.
SST 09213–58013 (91111–50845), 09330–00021

(b) Remove the 6 bolts and flywheel.

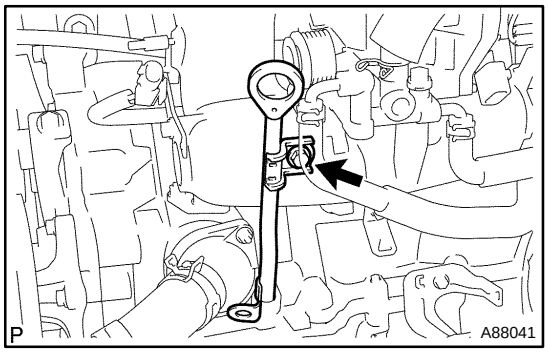

46. REMOVE OIL LEVEL GAGE GUIDE

(a) Remove the oil level gage.

(b) Remove the bolt and oil level gage guide.

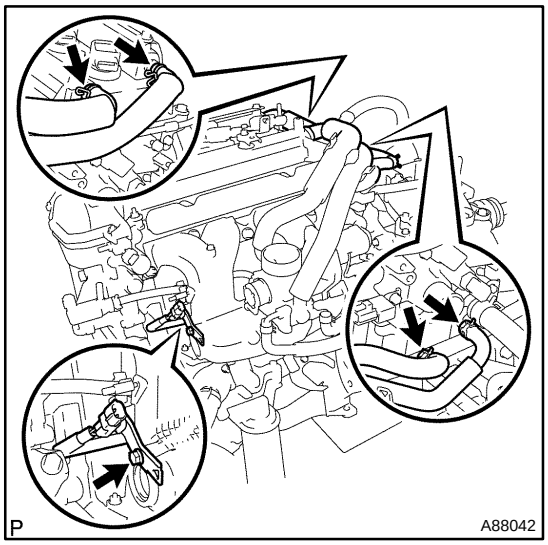

47. REMOVE INTAKE MANIFOLD

(a) Remove the bolt and knock control sensor with bracket.

(b) Disconnect the wiring harness from the bracket.

(c) Disconnect the ventilation hose.

(d) Disconnect the water by–pass hose.

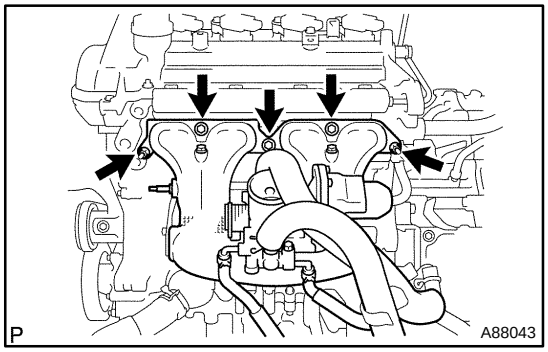

(e) Remove the 3 bolts and 2 nuts, then remove the intake manifold and gasket.

cardiagn.com

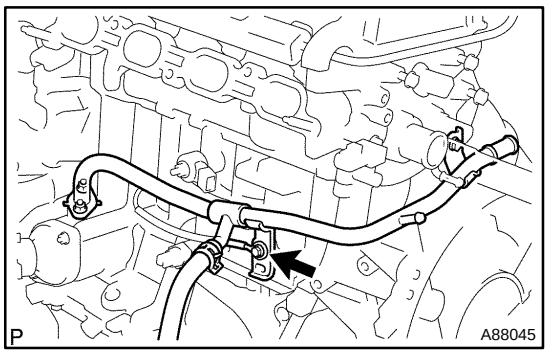

48. REMOVE WATER BY–PASS PIPE NO.1

(a) Remove the bolt, then disconnect the wire harness.

(b) Remove the 2 nuts and bolt, then remove the water by–pass pipe No. 1 and gasket.

49. REMOVE KNOCK CONTROL SENSOR (See page 10–20)

50. REMOVE ENGINE OIL PRESSURE SWITCH ASSY (See page 17–1)

51. REMOVE FAN AND GENERATOR V BELT (See page 14–5)

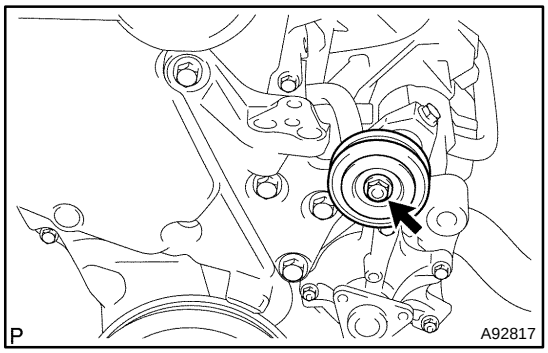

52. REMOVE IDLER PULLEY ASSY

(a) Remove the nut, then remove the idle pulley assembly from the engine mounting bracket RH.

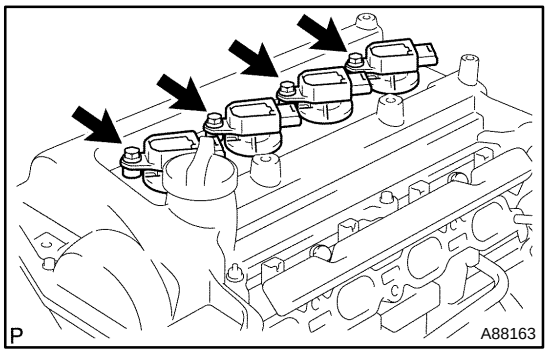

53. REMOVE IGNITION COIL NO.1

(a) Remove the bolt and ignition coil No. 1.

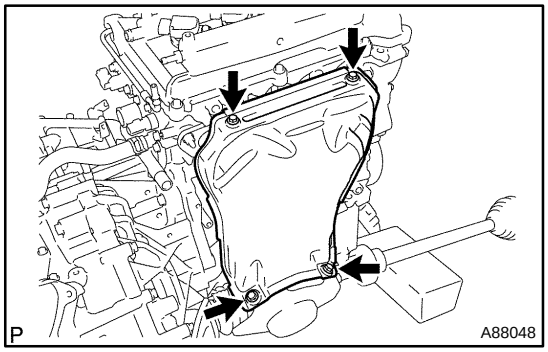

54. REMOVE EXHAUST MANIFOLD

(a) Remove the 4 bolts and exhaust manifold heat insulator No. 1.

cardiagn.com

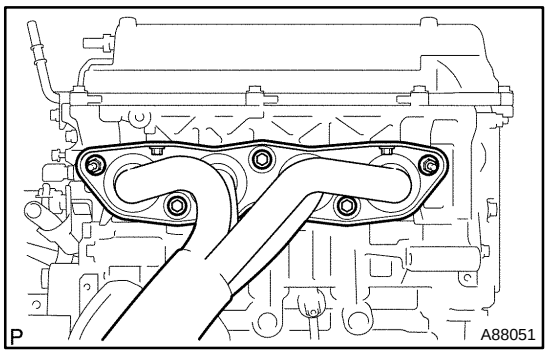

(b) Remove the 3 bolts and 2 nuts, then remove the exhaust manifold.

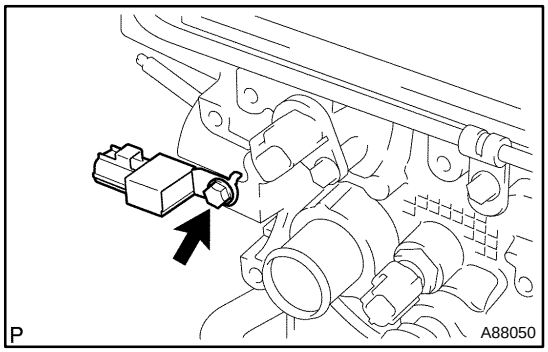

55. REMOVE RADIO SETTING CONDENSER

(a) Remove the bolt and radio setting condenser.

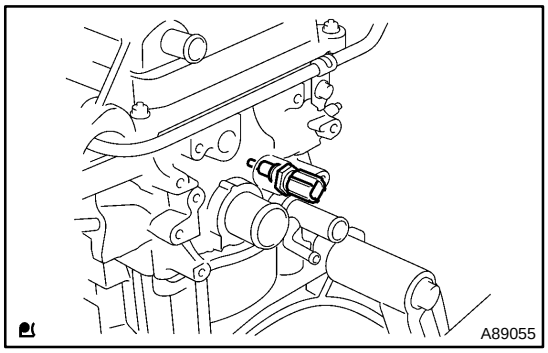

56. REMOVE E.F.I. ENGINE COOLANT TEMPERATURE SENSOR

(a) Using a 19 mm deep socket wrench, remove the EFI water temperature sensor.

57. REPLACE PARTIAL ENGINE ASSY

58. INSTALL E.F.I. ENGINE COOLANT TEMPERATURE SENSOR

(a) Install a new gasket, then install the EFI water temperature sensor.
Torque: 20 N·m (204 kgf·cm, 15 ft·lbf)

59. INSTALL RADIO SETTING CONDENSER
Torque: 9.0 N·m (92 kgf·cm, 80 in.·lbf)

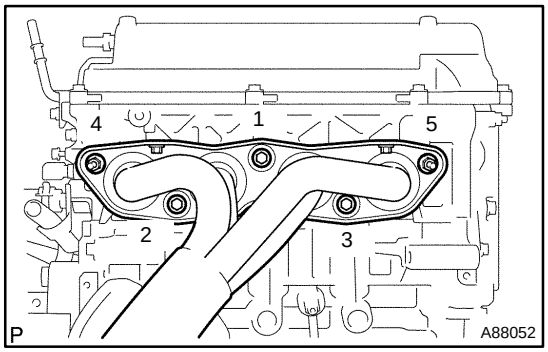

60. INSTALL EXHAUST MANIFOLD

(a) Install a new gasket, then install the exhaust manifold.

(b) Tighten the 3 bolts and 2 nuts in the sequence shown in the illustration.
Torque: 27 N·m (275 kgf·cm, 20 ft·lbf)

(c) Install the exhaust manifold heat insulator No. 1 with the 4 bolts.
Torque: 8.0 N·m (82 kgf·cm, 71 in.·lbf)

cardiagn.com

61. INSTALL IGNITION COIL NO.1
Torque: 9.0 N·m (92 kgf·cm, 80 in.·lbf)

62. INSTALL IDLER PULLEY ASSY

(a) Temporarily install the idler pulley assembly to the engine mounting bracket RH with the nut.

HINT:
Tighten the nut with the specified torque when installing the V–ribbed belt.

63. INSTALL FAN AND GENERATOR V BELT (See page 14–5)

64. INSTALL ENGINE OIL PRESSURE SWITCH ASSY (See page 17–1)

65. INSTALL KNOCK CONTROL SENSOR (See page 10–20)

66. INSTALL WATER BY–PASS PIPE NO.1

(a) Install a new gasket, then install the water by–pass pipe No. 1 with the bolt and 2 nuts.
Torque: 9.0 N·m (92 kgf·cm, 80 in.·lbf)

67. INSTALL INTAKE MANIFOLD

(a) Install a new gasket, then install the intake manifold with the 3 bolts and 2 nuts.
(b) Connect the water by–pass hose.
(c) Connect the ventilation hose.
(d) Install the knock control sensor with bracket with the bolt.
Torque: 9.0 N·m (92 kgf·cm, 80 in.·lbf)

68. INSTALL OIL LEVEL GAGE GUIDE

(a) Apply engine oil to a new O–ring, then install it to the oil level gage guide.
(b) Install the oil level gage with the bolt.
Torque: 9.0 N·m (92 kgf·cm, 80 in.·lbf)
(c) Install the oil level gage.

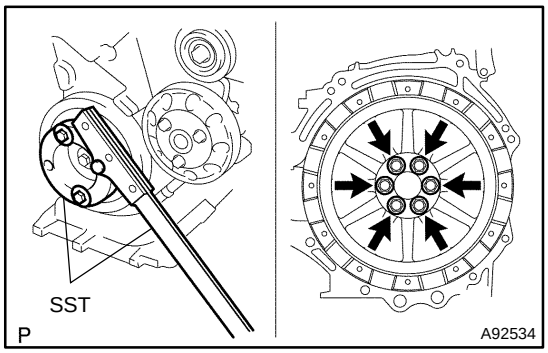

69. INSTALL FLYWHEEL SUB–ASSY

(a) Apply adhesive to the 2 or 3 threads of the bolt end.
Adhesive:
Part No. 08833–00070,
THREE BOND 1324 or equivalent

NOTICE:
Remove any oil from the bolts and bolt holes.

(b) Using SST, hold the crankshaft.
SST 09213–58013 (91111–50845), 09330–00021
(c) Install the flywheel with 6 new bolts.
Torque: 49 N·m (500 kgf·cm, 36 ft·lbf)
(d) After tightening the bolts with the specified torque, tighten each bolt by more 90◆.

NOTICE:
Do not start the engine within 1 hour of installation.

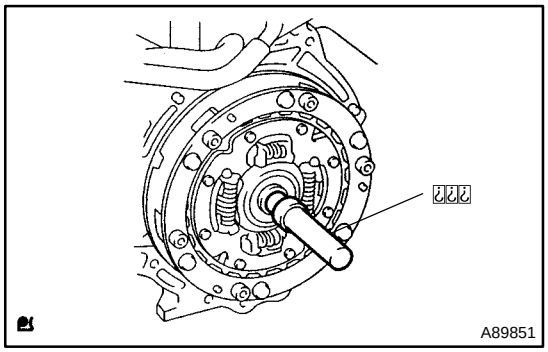

70. INSTALL TRANSMISSION INPUT DAMPER ASSY

(a) Using SST, align the hole of the input damper. Then temporarily tighten the input damper cover with the 6 bolts.
SST 09301–00210

cardiagn.com

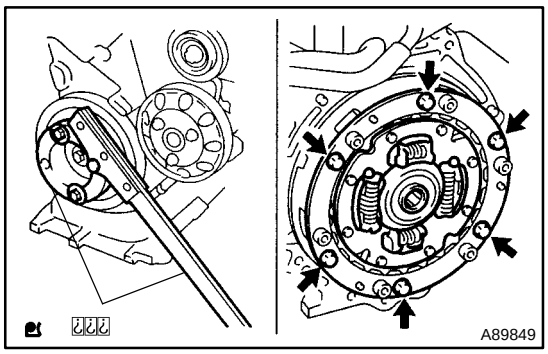

(b) Using SST, hold the crankshaft.
SST 09213–58013 (91111–50845), 09330–00021

(c) Tighten the 6 bolts.
Torque: 20 N·m (204 kgf·cm, 15 ft·lbf)

71. INSTALL HYBRID VEHICLE TRANSAXLE ASSY

(a) Install the hybrid vehicle transaxle assembly to the engine assembly with the 6 bolts (see page 22–11).

(b) Install the flywheel housing side cover and starter hole insulator with the 2 bolts.
Torque: 32 N·m (326 kgf·cm, 24 ft·lbf)

(c) Install the engine wire harness to the engine assembly with transaxle.

(d) Remove the bolt and engine hanger.

(e) Install the ground cable with the bolt.
Torque: 9.0 N·m (92 kgf·cm, 80 in.·lbf)

72. INSTALL AIR CLEANER ASSY
Torque:
7.0 N·m (71 kgf·cm, 62 in.·lbf) for bolt
3.0 N·m (31 kgf·cm, 27 in.·lbf) for clamp

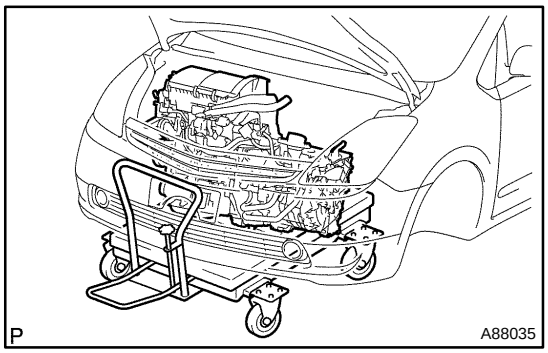

73. INSTALL ENGINE ASSEMBLY WITH TRANSAXLE

(a) Set the engine lifter as illustrated.

(b) Operate the engine lifter, then install the engine assembly with transaxle to the vehicle.

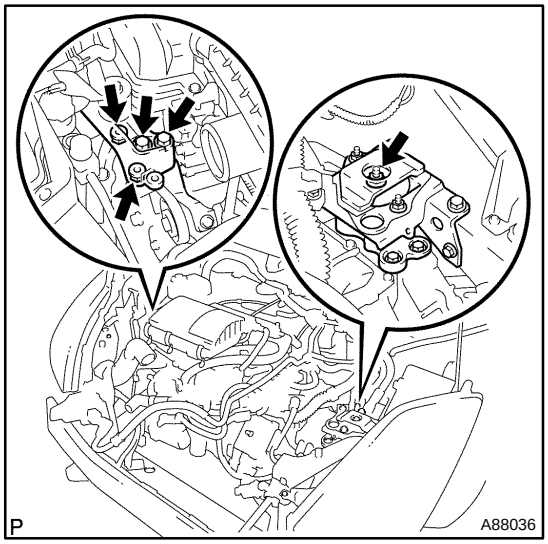

(c) Connect the engine mounting bracket RH and engine mounting insulator RH with the 2 bolts and 2 nuts.
Torque: 52 N·m (530 kgf·cm, 38 ft·lbf)

(d) Connect the engine mounting insulator bracket LH and engine mounting insulator LH with the nut.
Torque: 80 N·m (816 kgf·cm, 59 ft·lbf)

cardiagn.com

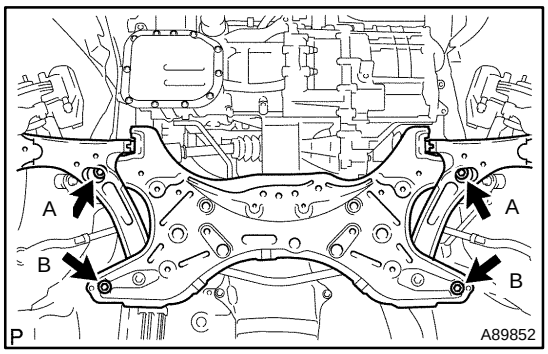

74. INSTALL FRONT SUSPENSION CROSSMEMBER SUB–ASSY

(a) Install the front suspension crossmember with power steering gear assembly with the 4 bolts.
Torque:
113 N·m (1152 kgf·cm, 83 ft·lbf) for bolt A
157 N·m (1602 kgf·cm, 116 ft·lbf) for bolt B

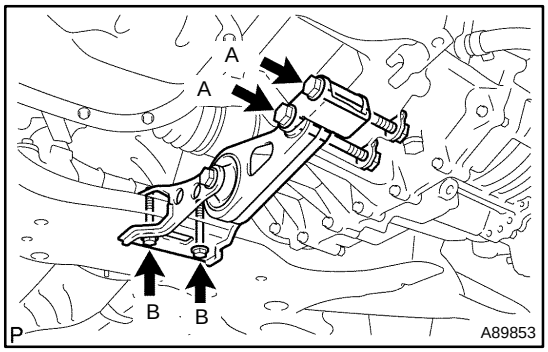

(b) Install the engine moving control rod withe bracket with the 4 bolts and 2 nuts.
Torque:
100 N·m (1020 kgf·cm, 74 ft·lbf) for bolt A
56 N·m (571 kgf·cm, 41 ft·lbf) for bolt B

75. INSTALL FRONT DRIVE SHAFT ASSY LH (See page 11–24)
76. INSTALL FRONT DRIVE SHAFT ASSY RH (See page 11–24)
77. CONNECT FRONT AXLE ASSY LH (See page 11–24)
78. CONNECT FRONT AXLE ASSY RH
HINT:
Connect it in the same procedure as the LH side.
79. CONNECT FRONT SUSPENSION ARM SUB–ASSY LOWER NO.1 LH (See page 11–24)
80. CONNECT FRONT SUSPENSION ARM SUB–ASSY LOWER NO.1 RH
HINT:
Connect it in the same procedure as the LH side.
81. CONNECT TIE ROD END SUB–ASSY LH (See page 11–24)
82. CONNECT TIE ROD END SUB–ASSY RH
HINT:
Connect it in the same procedure as the LH side.
83. CONNECT FRONT STABILIZER LINK ASSY (See page 11–24)
84. INSTALL FRONT AXLE HUB LH NUT (See page 11–24)
85. INSTALL FRONT AXLE HUB RH NUT
HINT:
Install it in the same procedure as the LH side.
86. INSTALL EXHAUST PIPE ASSY FRONT (See page 11–24)

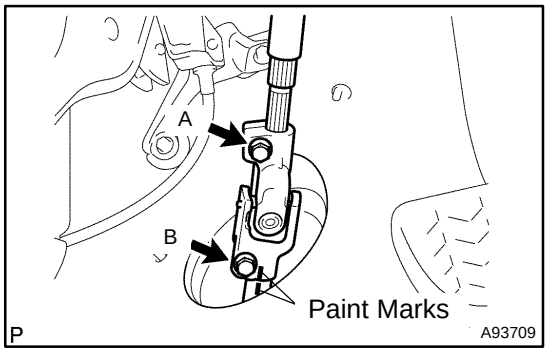

87. CONNECT STEERING SLIDING YOKE SUB–ASSY

(a) Align the paint marks, then connect the steering sliding yoke with the bolt.
Torque: 35 N·m (357 kgf·cm, 26 ft·lbf)

(b) Install the column hole cover silencer sheet with the 2 clips.

(c) Remove the seat belt from the steering wheel.

cardiagn.com

88. CONNECT W/MOTOR COMPRESSOR ASSY
Torque: 25 N·m (255 kgf·cm, 18 ft·lbf)
89. CONNECT ENGINE WIRE
90. CONNECT HEAT STRAGE WATER BY–PASS HOSE NO.3
91. CONNECT HEATER WATER HOSE B
92. CONNECT FUEL TUBE SUB–ASSY
(a) Push the fuel tube into the fuel delivery pipe until it makes a ”click” sound.
HINT:
- If the fuel tube is connected too tightly, apply a light coat of engine oil to the tip of the fuel delivery pipe.
- After connecting, check that the fuel tube is securely connected by pulling it.

(b) Install the fuel pipe clamp.
93. INSTALL VACUUM SWITCHING VALVE ASSY NO.2
Torque: 7.5 N·m (76 kgf·cm, 5.5 in.·lbf)
94. CONNECT AIR CLEANER INLET NO.1
Torque: 3.0 N·m (31 kgf·cm, 27 in.·lbf)
95. CONNECT ENGINE WIRE
96. CONNECT HEAT STRAGE WATER BY–PASS HOSE NO.1
97. CONNECT INVERTER COOLING HOSE NO.3
98. INSTALL NO.2 RADIATOR ASSY (See page 16–33)
99. INSTALL W/CONVERTER INVERTER ASSY (See page 21–23)
100. INSTALL COWL TOP PANEL SUB–ASSY OUTER FRONT (See page 11–15)
101. INSTALL WINDSHIELD WIPER LINK ASSY (See page 66–14)
102. ADD TRANSAXLE OIL (See page 22–11)
103. INSTALL SERVICE PLUG GRIP (See page 21–116)
104. CONNECT BATTERY NEGATIVE TERMINAL
Torque: 6.0 N·m (61 kgf·cm, 53 in.·lbf)
105. INSTALL REAR FLOOR BOARD NO.3
106. INSTALL DECK FLOOR BOX REAR
107. INSTALL REAR FLOOR BOARD NO.2
108. ADD ENGINE COOLANT
(a) Add engine coolant to the radiator on the engine side (see page 22–4).
(b) Add engine coolant to the radiator on the hybrid side (see page 16–11).
109. INSPECT TRANSAXLE FLUID LEVEL (See page 22–1)
110. CHECK FOR ENGINE COOLANT LEAKS (See page 16–2)
111. CHECK FOR FUEL LEAKS
112. INSPECT OIL LEAK
113. INSTALL FRONT WHEELS
Torque: 103 N·m (1050 kgf·cm, 76 ft·lbf)
114. ADJUST FRONT WHEEL ALIGNMENT (See page 26–6)
115. INSTALL ENGINE UNDER COVER RH
116. INSTALL ENGINE UNDER COVER LH
117. POWER WINDOW CONTROL SYSTEM INITIALIZE(See page 01–28)

cardiagn.com

OVERHAUL

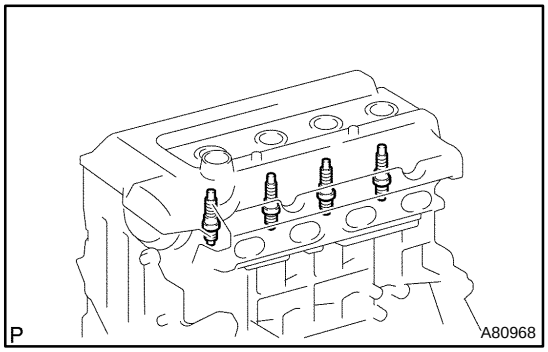

1. REMOVE SPARK PLUG

(a) Using a spark plug wrench, remove the 4 spark plugs.

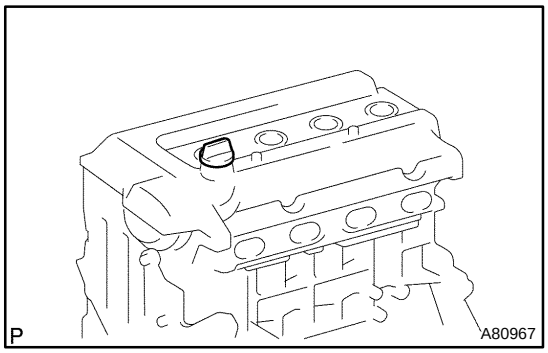

2. REMOVE OIL FILLER CAP SUB–ASSY

(a) Remove the oil filler cap from the cylinder head cover.

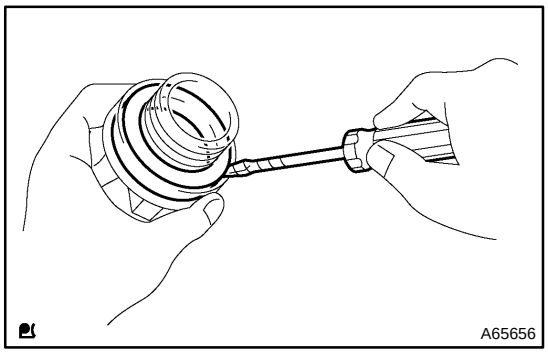

3. REMOVE OIL FILLER CAP GASKET

(a) Using a screwdriver with its tip wrapped in tape, remove the oil filler cap gasket.

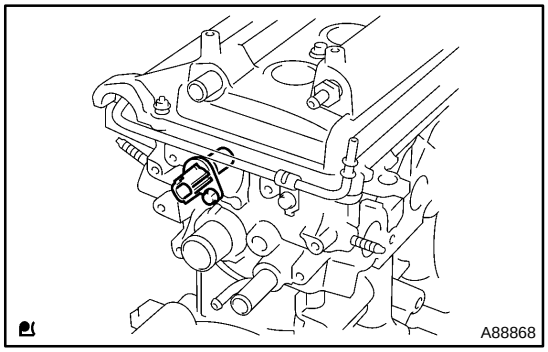

4. REMOVE CAM POSITION SENSOR

(a) Remove the bolt and camshaft position sensor.

cardiagn.com

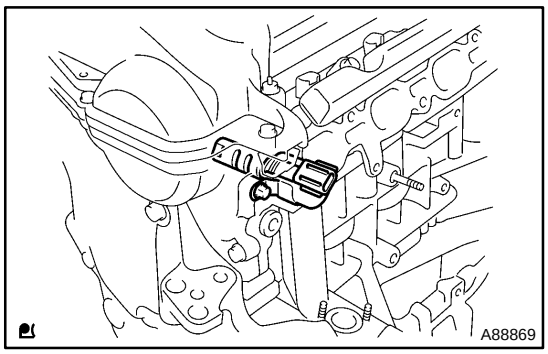

5. REMOVE CAMSHAFT TIMING OIL CONTROL VALVE ASSY

(a) Remove the bolt and camshaft timing oil control valve assembly.

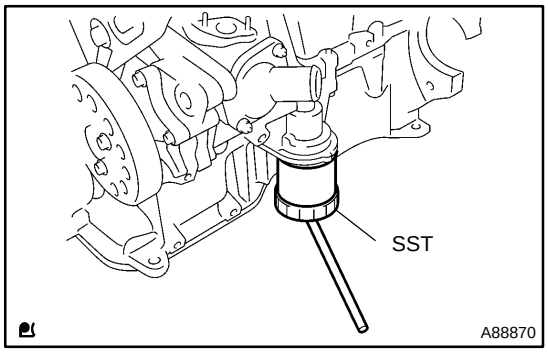

6. REMOVE OIL FILTER SUB–ASSY

(a) Using SST, remove the oil filter.
SST 09228–06501

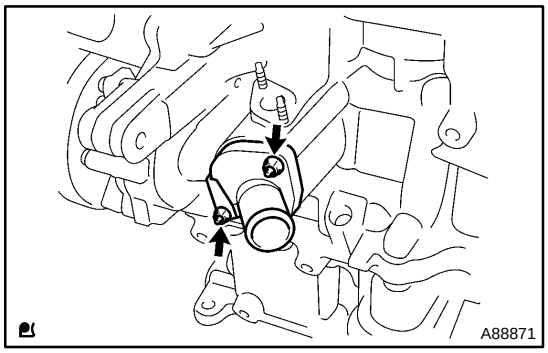

7. REMOVE THERMOSTAT

(a) Remove the 2 nuts and water inlet.

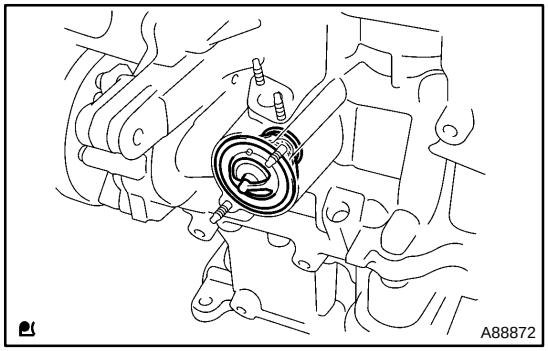

(b) Remove the thermostat.

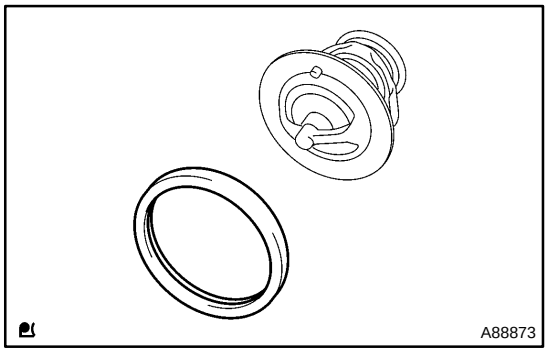

(c) Remove the water inlet housing gasket No. 1 from the thermostat.

cardiagn.com

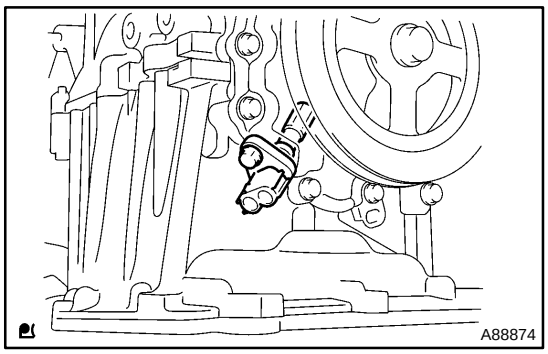

8. REMOVE CRANK POSITION SENSOR

(a) Remove the bolt and crank position sensor.

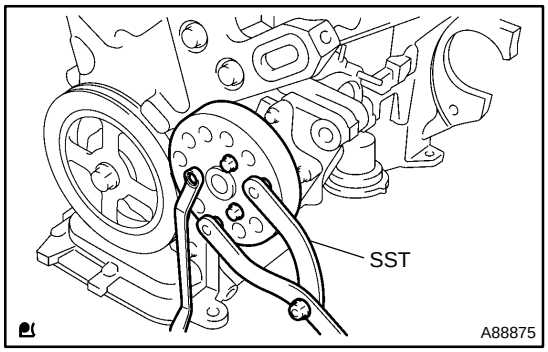

9. REMOVE WATER PUMP PULLEY

(a) Using SST, hold the water pump pulley.
SST 09960–10010 (09962–01000, 09963–01000)

(b) Remove the 3 bolts and water pump pulley.

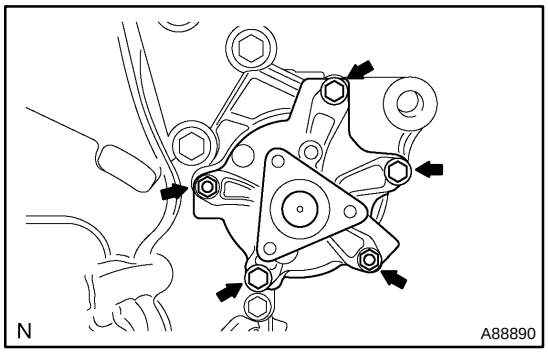

10. REMOVE WATER PUMP ASSY

(a) Remove the 3 bolts and 2 nuts, then remove the water pump assembly.

(b) Remove the water pump gasket.

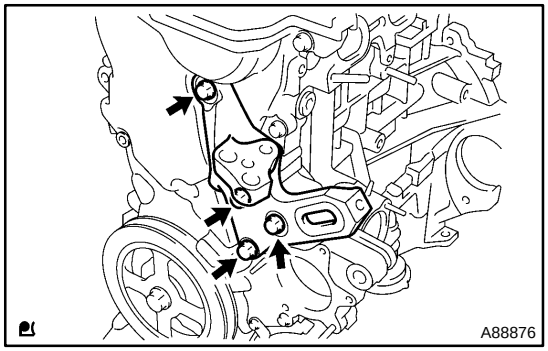

11. REMOVE TRANSVERSE ENGINE ENGINE MOUNTING BRACKET

(a) Remove the 4 bolts and transverse engine engine mounting bracket.

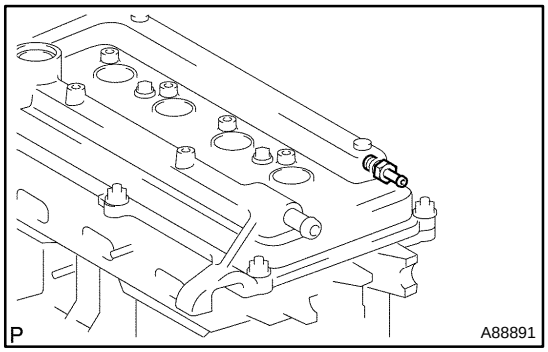

12. REMOVE VENTILATION VALVE SUB–ASSY

(a) Remove the ventilation valve from the cylinder head cover.

cardiagn.com

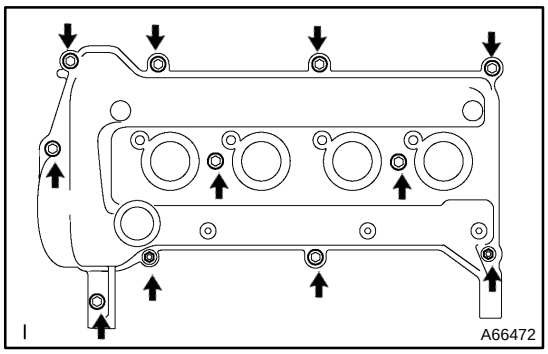

13. REMOVE CYLINDER HEAD COVER SUB–ASSY

(a) Remove the 9 bolts and 2 nuts, then remove the cylinder head cover.

(b) Remove the cylinder head cover gasket from the cylinder head cover.

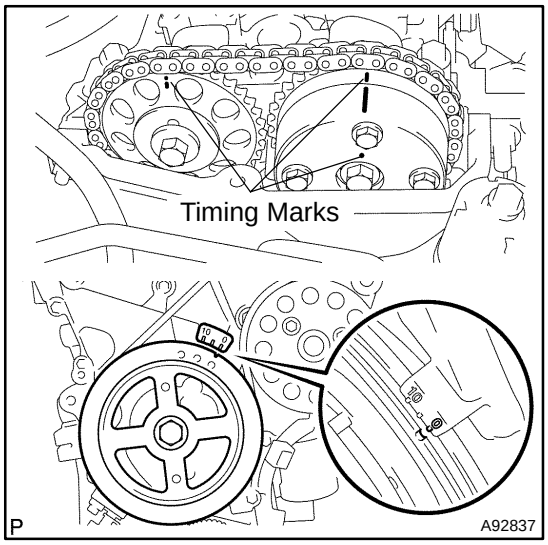

14. REMOVE CRANKSHAFT DAMPER SUB–ASSY

(a) Set the No. 1 cylinder to the TDC/compression.

(1) Turn the crankshaft damper clockwise, then align its timing mark notch with the timing mark ”0”.

(2) Check that the timing marks of the camshaft timing gear are located as illustrated.

HINT:

If not, turn the crankshaft to align the marks.

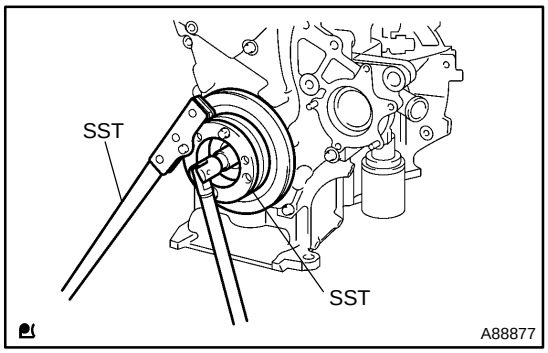

(b) Using SST, hold the crankshaft damper and loosen the crankshaft bolt.

SST 09213–58013 (91111–50845), 09330–00021

NOTICE:

When installing SST, be careful that the bolt which holds SST does not interfere with the chain cover.

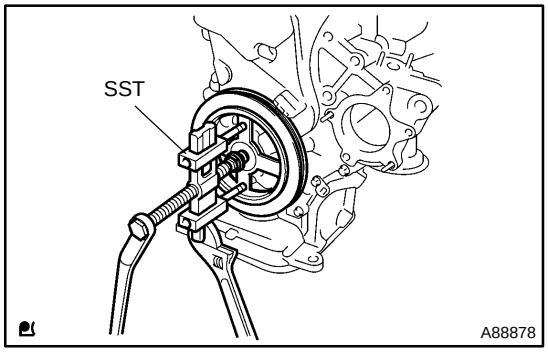

(c) Loosen the crankshaft bolt until the 2 to 3 threads of the bolt is tightened to the crankshaft.

(d) Using SST, remove the crankshaft damper and crankshaft bolt.

SST 09950–50013 (09951–05010, 09952–05010, 09953–05020, 09954–05021)

cardiagn.com

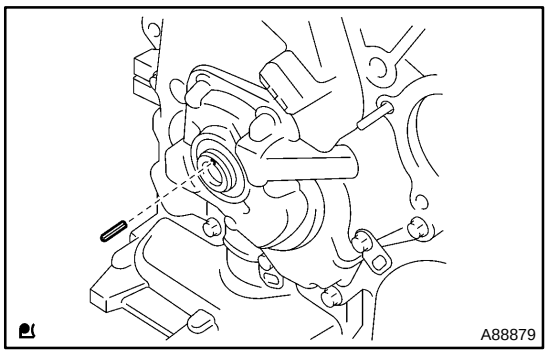

(e) Remove the crankshaft straight pin.

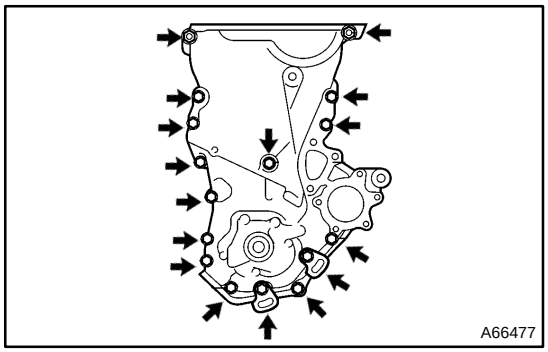

15. REMOVE OIL PUMP ASSY

(a) Remove the 15 bolts and nut.

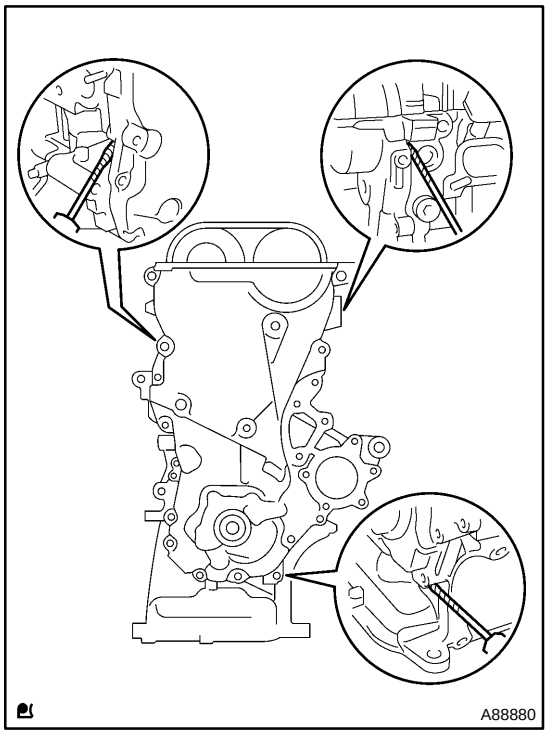

(b) Using a screwdriver with its tip wrapped in tape, remove the oil pump assembly by prying out between the cylinder head and cylinder block.

NOTICE:

Be careful not to damage the contact surfaces of the oil pump assembly, cylinder head and cylinder block.

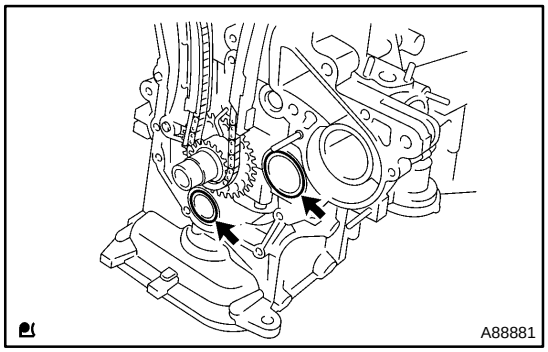

(c) Remove the 2 O–rings from the cylinder block and oil pan.

cardiagn.com

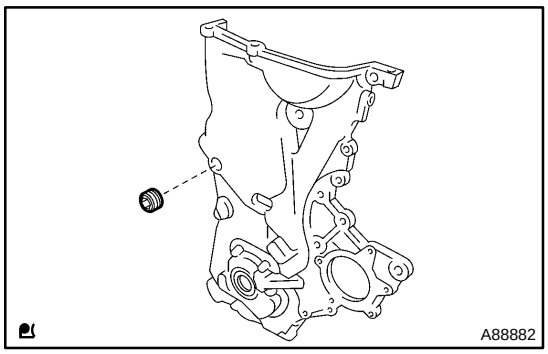

(d) Using an 8 mm socket hexagon wrench, remove the service hole screw plug.

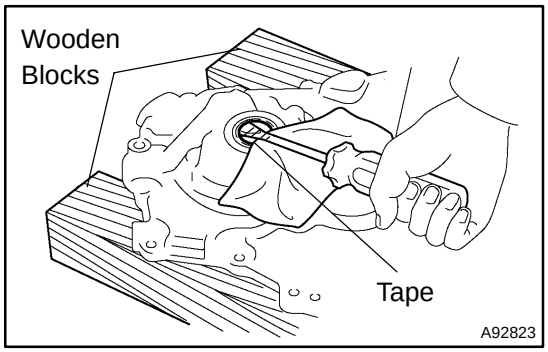

16. REMOVE OIL PUMP SEAL

(a) Using a screwdriver with its tip wrapped in tape, remove the oil seal.

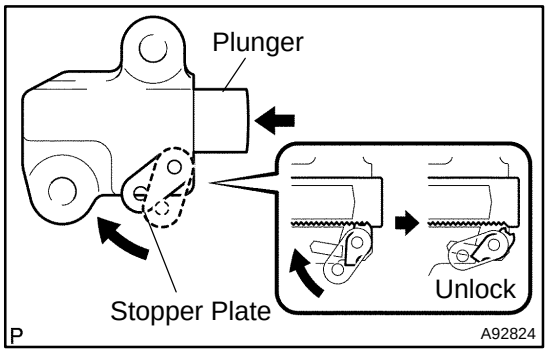

17. REMOVE CHAIN TENSIONER ASSY NO.1

NOTICE:

Do not rotate the crankshaft with the chain tensioner removed.

(a) Lift up the stopper plate, then unlock the plunger.

(b) Push in the plunger to the end with the plunger unlocked.

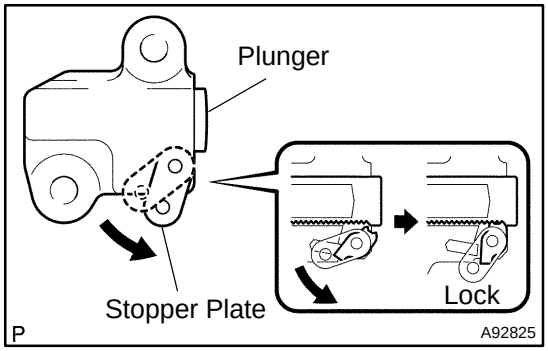

(c) Lift down the stopper plate with the plunger pushed to the end, then lock the plunger.

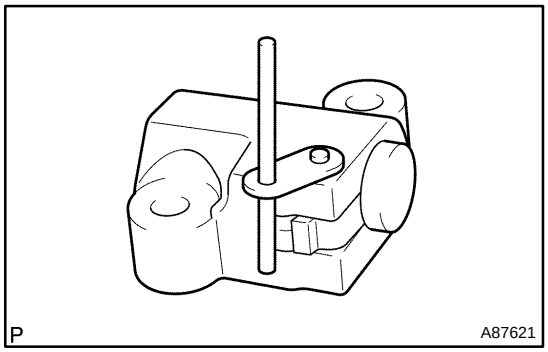

(d) Insert a 3.0 mm (0.118 in.) diameter bar into the hole of the stopper plate with the plunger locked.

HINT:

If the stopper plate is not completely lifted down and a 3.0 mm (0.118 in.) diameter bar cannot be inserted, unlock and pull out the plunger slightly. The stopper plate will be completely lifted down and a 3.0 mm (0.118 in.) diameter bar can be inserted easily.

cardiagn.com

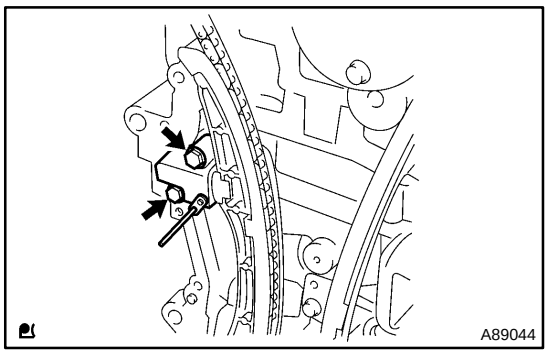

(e) Remove the 2 bolts and chain tensioner No. 1.

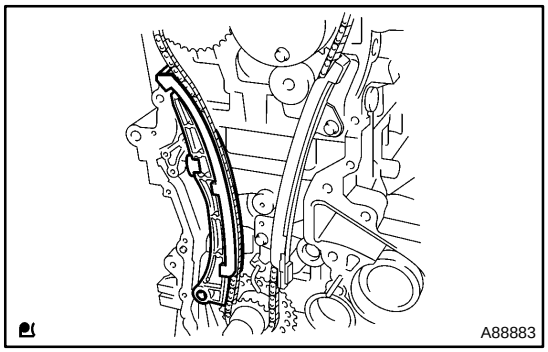

18. REMOVE CHAIN TENSIONER SLIPPER

(a) Remove the chain tensioner slipper from cylinder block.

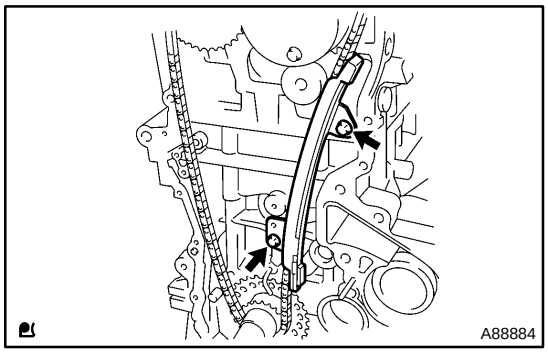

19. REMOVE CHAIN VIBRATION DAMPER NO.1

(a) Remove the 2 bolts and chain vibration damper No. 1.

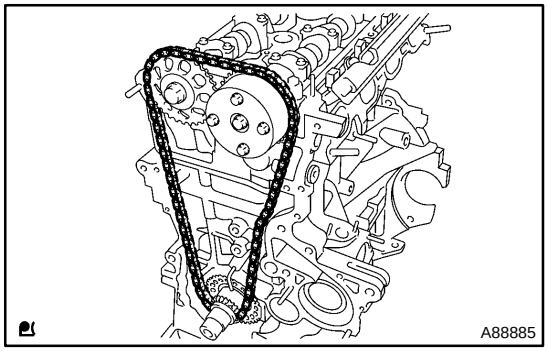

20. REMOVE CHAIN SUB–ASSY

(a) Remove the chain.

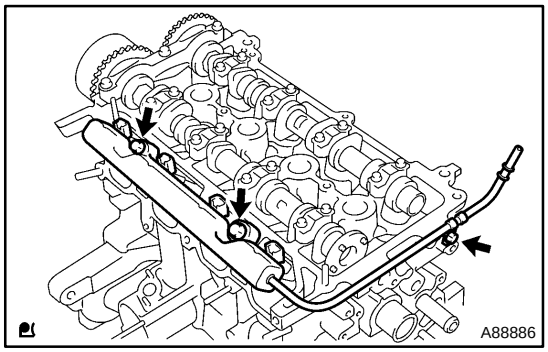

21. REMOVE FUEL DELIVERY PIPE SUB–ASSY

(a) Remove the 3 bolts and fuel delivery pipe with fuel injector assembly.

cardiagn.com

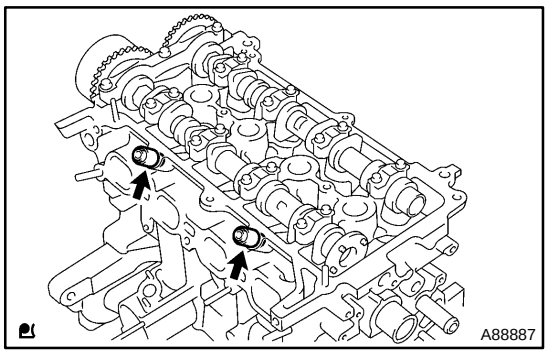

(b) Remove the delivery pipe spacer No. 1 from the cylinder head.

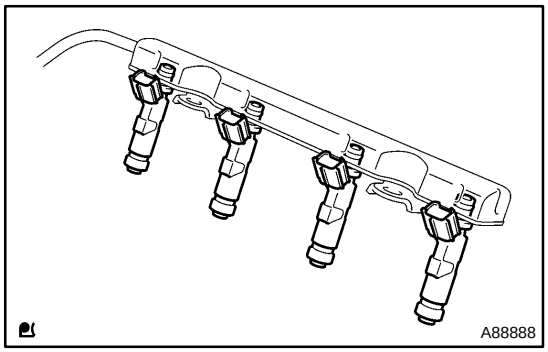

22. REMOVE FUEL INJECTOR ASSY

(a) Remove the fuel injector assembly from the fuel delivery pipe.

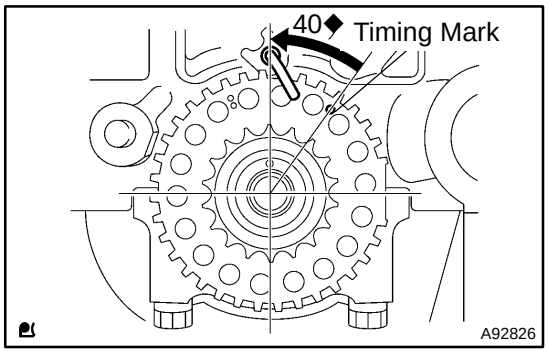

23. REMOVE NO.2 CAMSHAFT

NOTICE:

When rotating the camshaft with the chain removed, rotate the crankshaft counterclockwise by 40◆ from the TDC/ compression.

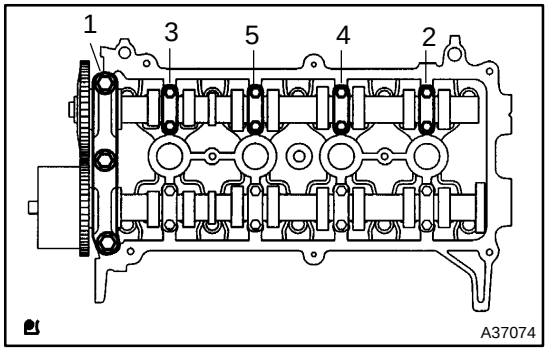

(a) Remove the camshaft bearing caps No. 1 and No. 2 in the sequence shown in the illustration, then remove the camshaft No. 2.

NOTICE:

Uniformly loosen the bolts keeping the camshaft level.

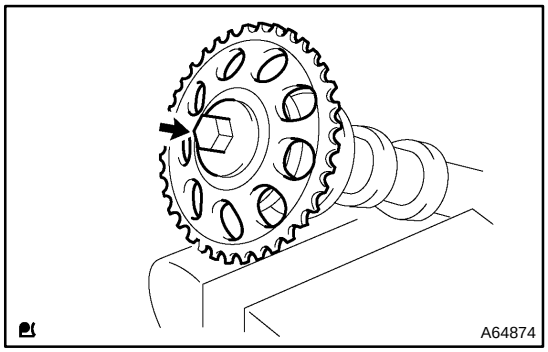

24. REMOVE CAMSHAFT TIMING GEAR OR SPROCKET

(a) Clamp the camshaft in a vise (using an aluminum protector).

(b) Remove the bolt and camshaft timing gear.

NOTICE:

Be careful not to damage the camshaft.

cardiagn.com

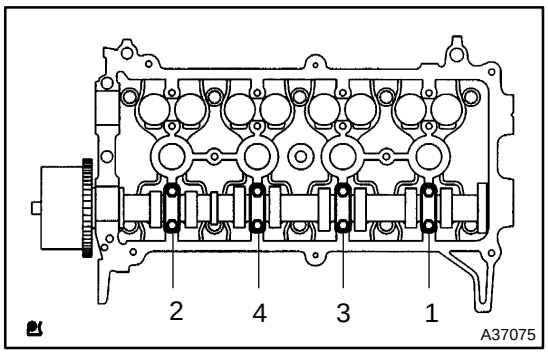

25. REMOVE CAMSHAFT

(a) Remove the camshaft bearing caps No. 2 in the sequence shown in the illustration, then remove the camshaft.

NOTICE:

Uniformly loosen the blots keeping the camshaft level.

26. INSPECT CAMSHAFT TIMING GEAR ASSY

(a) Check the lock of the camshaft timing gear.

(1) Clamp the hexagonal lobe of the camshaft in a vise (using an aluminum protector).

(2) Check that the camshaft timing gear is locked.

NOTICE:

Be careful not to damage the camshaft.

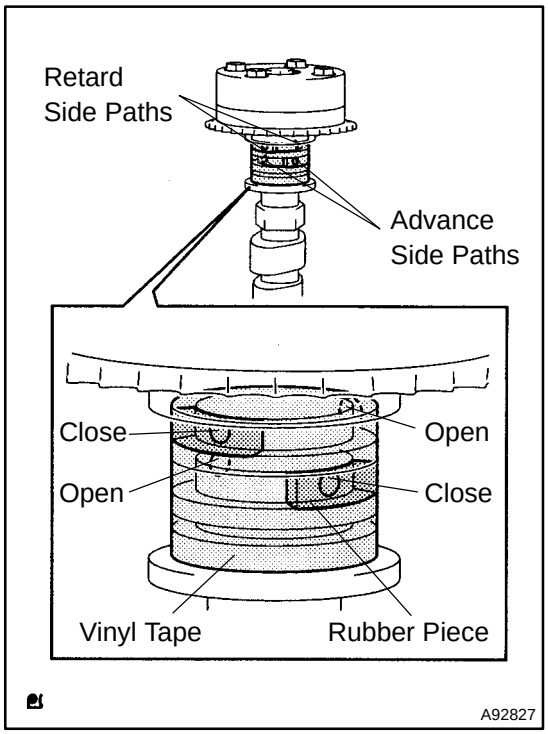

(b) Release the lock pin.

(1) Cover the 4 oil paths of the cam journal with vinyl tape as shown in the illustration.

HINT:

One of the 2 grooves located on the cam journal is for retarding cam timing (upper) and the other is for advancing cam timing (lower). Each groove has 2 oil paths. Plug one of the 2 oil paths for each groove with rubber pieces before wrapping the cam journal with the tape.

(2) Punctuate the tape which covers the advance side path and retard side path on the opposite side.

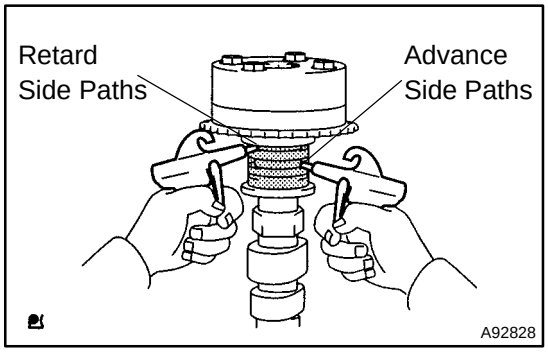

(3) Apply approximately 150 kPa (1.5 kgf/cm^2) of air pressure into the 2 punctuated paths (the advance side path and retard side path).

NOTICE:

When applying air pressure, cover the paths with a shop rag to prevent oil splash.

cardiagn.com

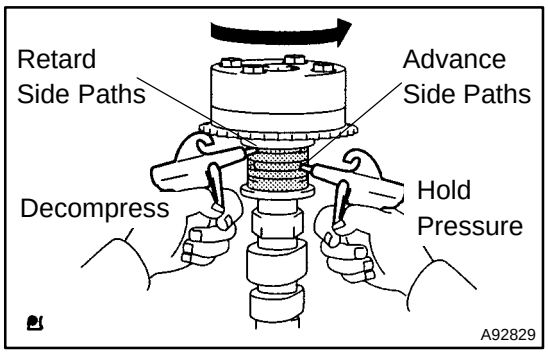

(4) Confirm that the camshaft timing gear assembly revolves in the advance direction when reducing the air pressure of the retard side path.

HINT:
The lock pin is released and the camshaft timing gear revolves in the advance direction.

(5) When the camshaft timing gear assembly reaches the most advanced position, release the air pressure of the retard side path, then release the air pressure of the advance side path.

NOTICE:
If the air pressure of the advance side path is released first, the camshaft timing gear assembly occasionally shifts in the retard direction abruptly, which may damage the lock pin. Be sure to release the air pressure of the retard side path first.

(c) Check the smooth revolution.
(1) Let the camshaft timing gear assembly rotate by 2 or 3 revolutions in the movable range (22.5◆) except the most retarded position. Check that it rotates smoothly.

NOTICE:
Do the check by hand, and do not use air pressure.

(d) Check the lock at the most retarded position.
(1) Confirm that the camshaft timing gear assembly is locked at the most retarded position (at the end of the movable range).

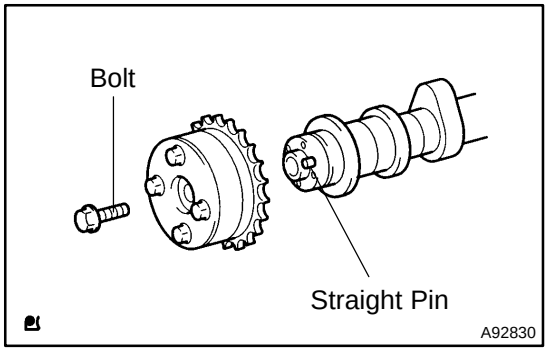

27. REMOVE CAMSHAFT TIMING GEAR ASSY

(a) Turn the camshaft timing gear assembly at the most advanced position.
(b) Remove the bolt and camshaft timing gear assembly.

NOTICE:
- **Do not remove the 4 other bolts.**
- **If reusing the camshaft timing gear assembly, unlock the lock pin inside the camshaft timing gear first.**

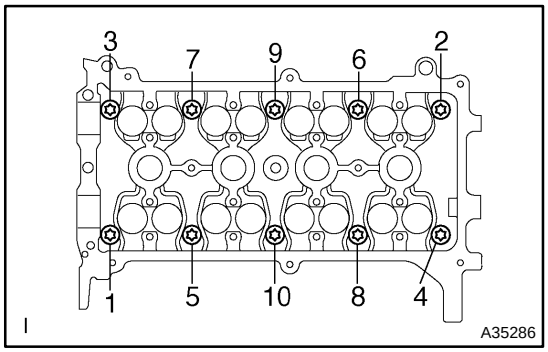

28. REMOVE CYLINDER HEAD SUB–ASSY

(a) Using several steps, loosen the 10 cylinder head bolts with an 8 mm bi–hexagon wrench in the sequence shown in the illustration. Then remove the 10 bolts and 10 washers.

NOTICE:
- **When removing the bolt, do not drop the washer into the engine.**
- **Removing the cylinder head bolts in a wrong order may cause damage to the cylinder head.**

cardiagn.com

29. REMOVE CYLINDER HEAD GASKET

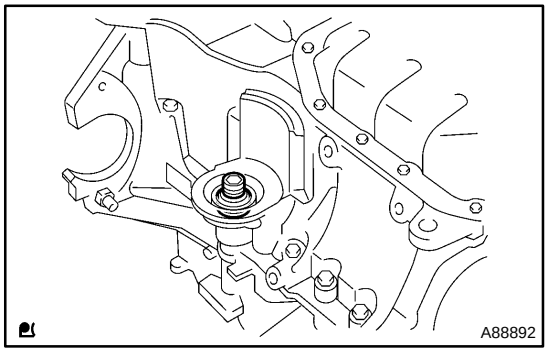

30. REMOVE OIL FILTER UNION

(a) Using a 12 mm socket hexagon wrench, remove the oil filter union.

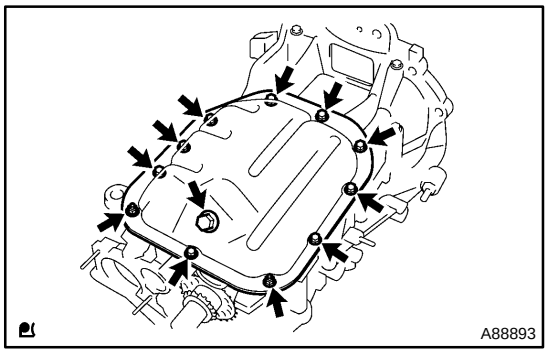

31. REMOVE OIL PAN SUB–ASSY NO.2

(a) Remove the oil pan drain plug and gasket.

(b) Remove the 9 bolts and 2 nuts.

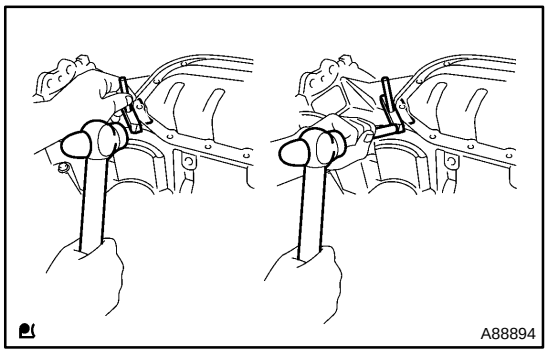

(c) Insert the blade of SST between the oil pan and oil pan No.2, and cut off the applied sealer and remove the oil pan No.2.
SST 09032–00100

NOTICE:

Be careful not to damage the oil pna and oil pan No.2.

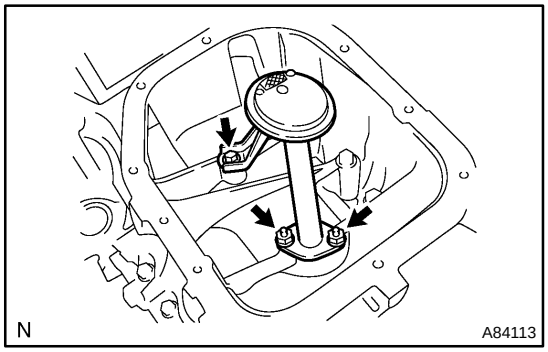

32. REMOVE OIL STRAINER SUB–ASSY

(a) Remove the bolt and 2 nuts, then remove the oil strainer and gasket.

cardiagn.com

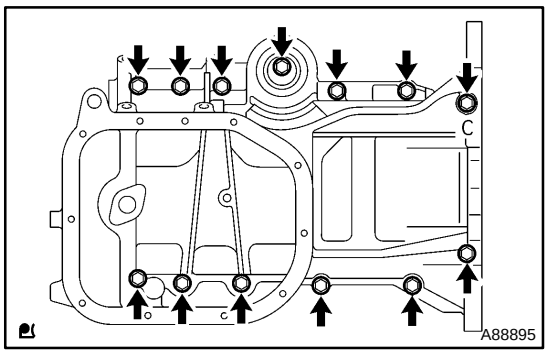

33. REMOVE OIL PAN SUB–ASSY

(a) Remove the 13 bolts.

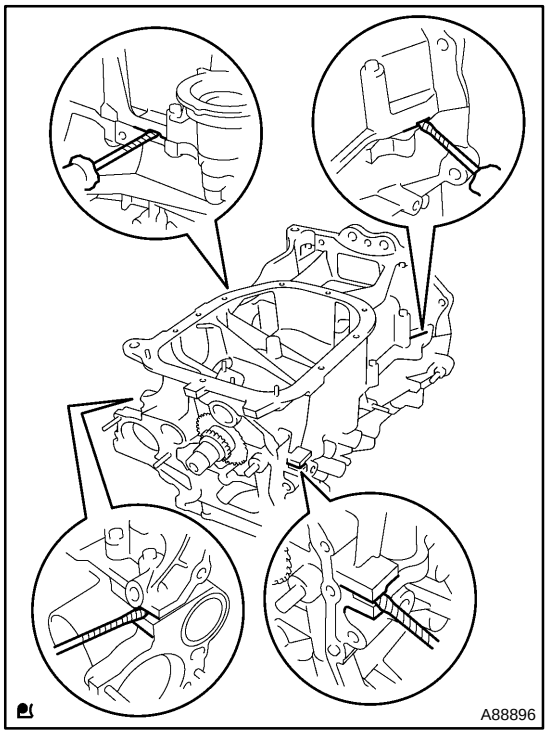

(b) Using a screwdriver with its tip wrapped in tape, remove the oil pan by prying out between the cylinder block and oil pan as illustrated.

NOTICE:

Do not forcibly pry out between the cylinder block and oil pan.

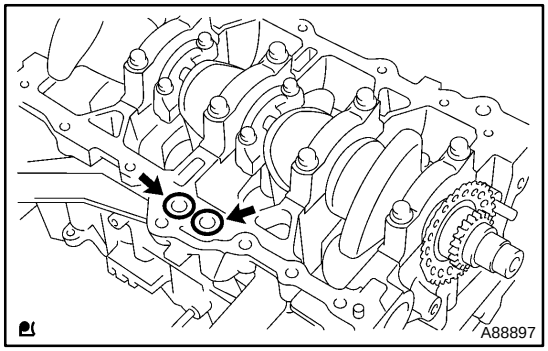

(c) Remove the 2 O–rings from the cylinder block.

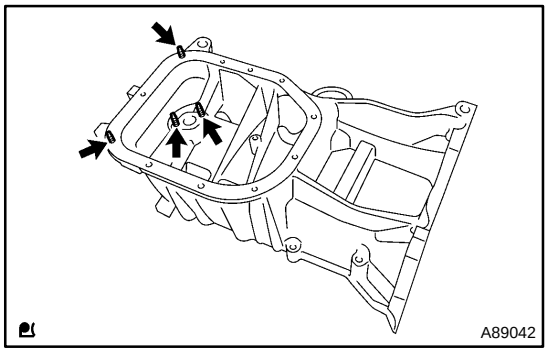

(d) Using a Torx socket wrench E5, remove the 4 stud bolts.

cardiagn.com

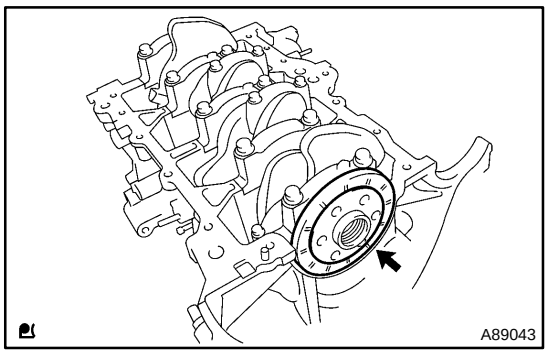

34. REMOVE ENGINE REAR OIL SEAL

(a) Remove the engine rear oil seal.

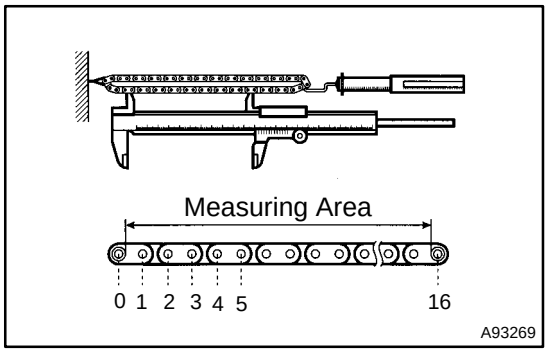

35. INSPECT CHAIN SUB–ASSY

(a) Using a spring scale, measure the length of the timing chain when it was pulled with 140 N (14.3 kgf, 31 lb).
Maximum chain length: 124.2 mm (4.890 in.)

If the chain length is greater than maximum, replace the chain.
HINT:
Measure the length at least at 3 places to obtain the average length.

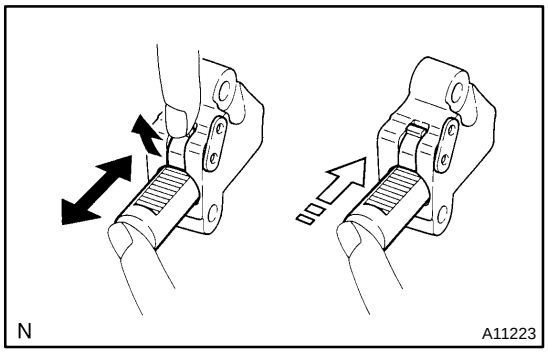

36. INSPECT CHAIN TENSIONER ASSY NO.1

(a) Check that the plunger moves smoothly when the cam is raised with your finger.

(b) Release the cam. Check that the plunger is locked by the cam and does not move when it is pushed by your finger.

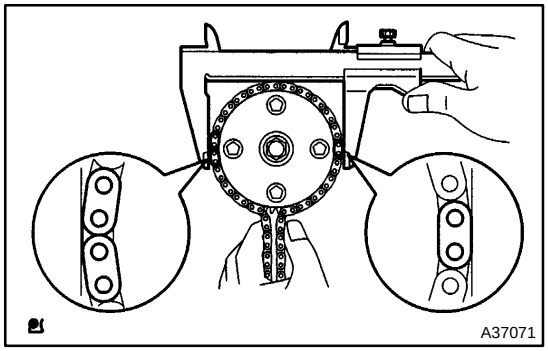

37. INSPECT CAMSHAFT TIMING GEAR ASSY

(a) Wrap the chain around the timing gear.

(b) Using vernier calipers, measure the diameter of the timing gear with the chain wrapped.
Minimum gear diameter (w/ chain): 96.2 mm (3.787 in.)

If the diameter is less than minimum, replace the camshaft timing gear assembly.

NOTICE:

When measuring the diameter, vernier calipers must contact the chain link.

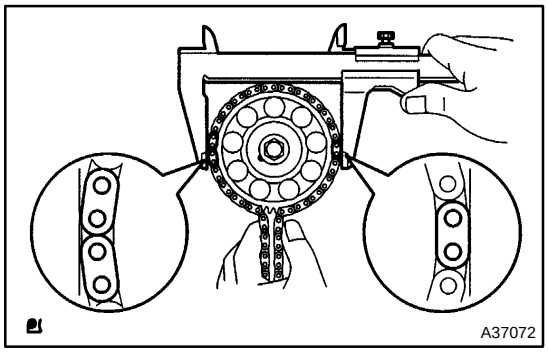

38. INSPECT CAMSHAFT TIMING GEAR OR SPROCKET

(a) Wrap the chain around the timing gear.

(b) Using vernier calipers, measure the diameter of the timing gear with the chain wrapped.
Minimum gear diameter (w/ chain): 96.2 mm (3.787 in.)

If the diameter is less than minimum, replace the camshaft timing gear.

NOTICE:

When measuring the diameter, vernier calipers must contact the chain link.

cardiagn.com

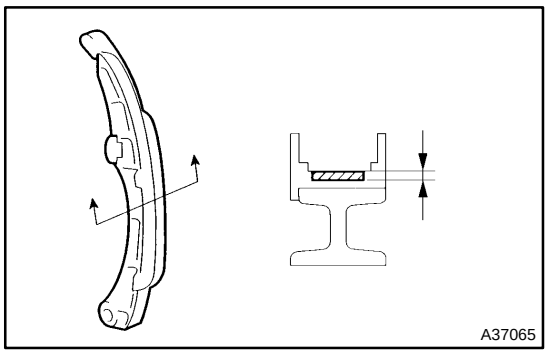

39. INSPECT CHAIN TENSIONER SLIPPER

(a) Using vernier calipers, measure the thickness of the chain tensioner slipper.
Maximum wear: 1.0 mm (0.039 in.)

If the thickness is greater than maximum, replace the chain tensioner slipper.

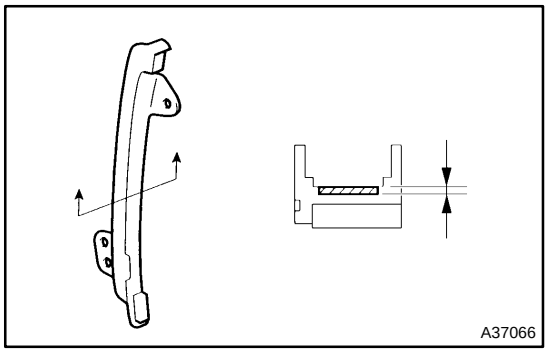

40. INSPECT CHAIN VIBRATION DAMPER NO.1

(a) Using vernier calipers, measure the thickness of the chain vibration damper.
Maximum wear: 1.0 mm (0.039 in.)

If the thickness is greater than maximum, replace the chain vibration damper.

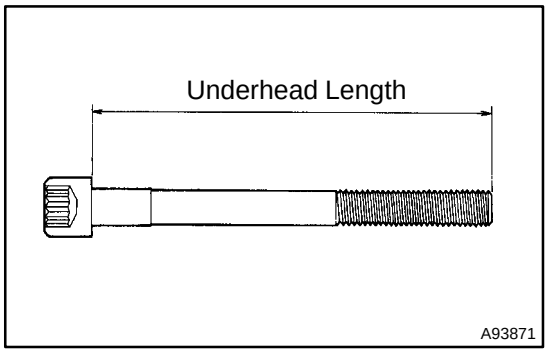

41. INSPECT CYLINDER HEAD SET BOLT

(a) Using vernier calipers, measure the length of the head bolts from the seating to the end.
Standard bolt length:
142.8 to 144.2 mm (5.622 to 5.677 in.)
Maximum bolt length: 147.1 mm (5.791 in.)

If the length is greater than maximum, replace the head bolt.

42. INSTALL OIL PAN SUB–ASSY

(a) Using a Torx socket wrench E5, install the 4 stud bolts.
Torque: 5.0 N·m (51 kgf·cm, 44 in.·lbf)

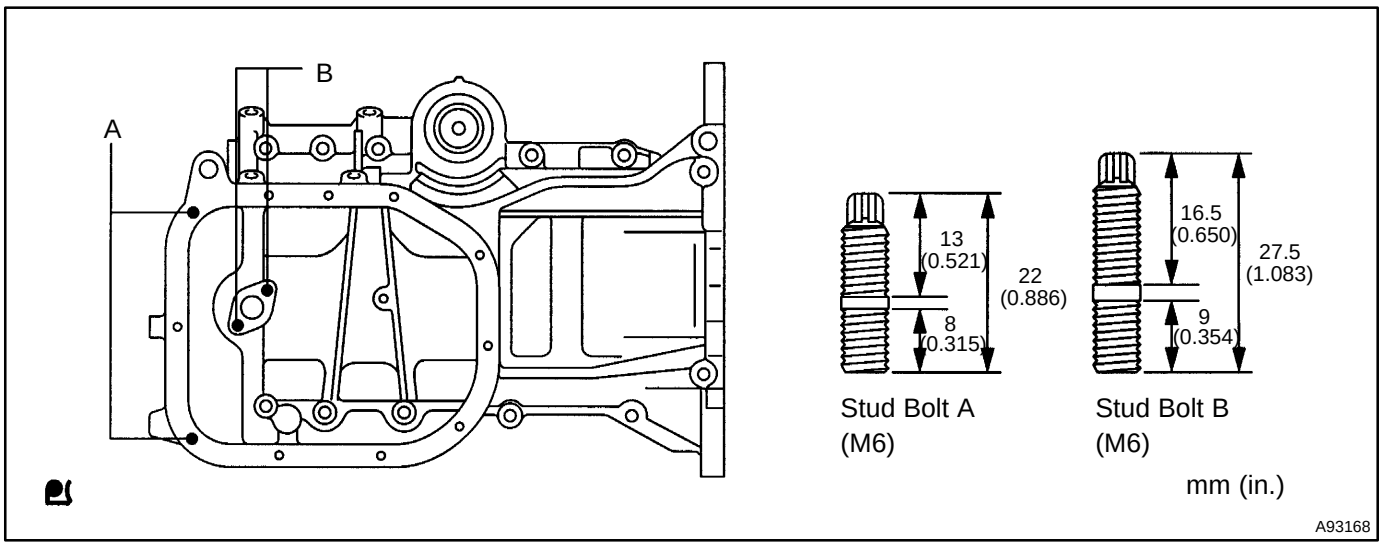

cardiagn.com

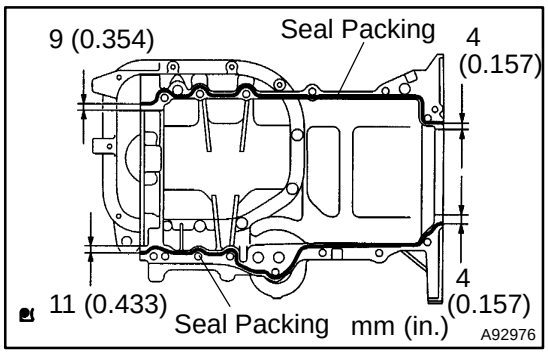

(b) Apply a continuous bead of seal packing (Diameter 2.0 to 3.0 mm (0.079 to 0.118 in.)) to the oil pan as illustrated.
Seal packing: Part No. 08826–00080 or equivalent

NOTICE:
- **Remove any oil from the contact surface.**
- **Install the oil pan within 3 minutes, and tighten the bolts within 15 minutes after applying seal packing.**
- **Do not expose the seal packing to engine oil within 2 hours of installation.**

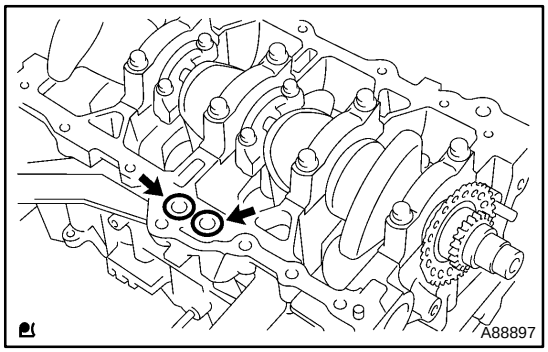

(c) Install 2 new O–rings to the cylinder block, then install the oil pan.

NOTICE:
- **Clean the contact surface of the new O–rings.**
- **Be careful that the O–rings are not jammed when installing the oil pan.**

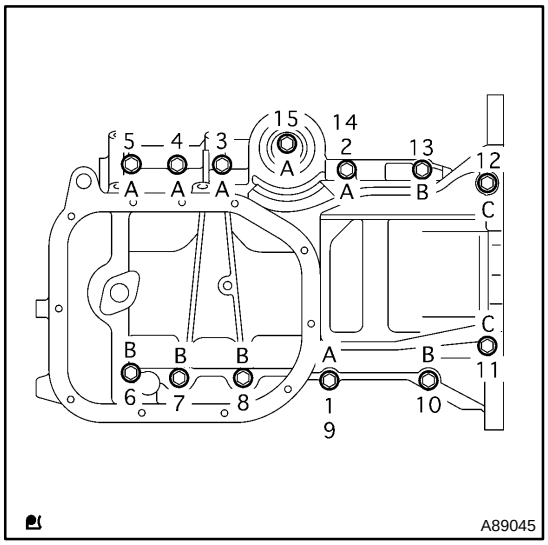

(d) Using several steps, temporarily tighten the 13 bolts in the sequence shown in the illustration, then tighten the bolts with the specified torque.
Torque: 24 N·m (245 kgf·cm, 18 ft·lbf)

HINT:
The bolt length is as follows.
Bolt A 46 mm (1.81 in.)
Bolt B 85 mm (3.35 in.)
Bolt C 140.7 mm (5.54 in.)

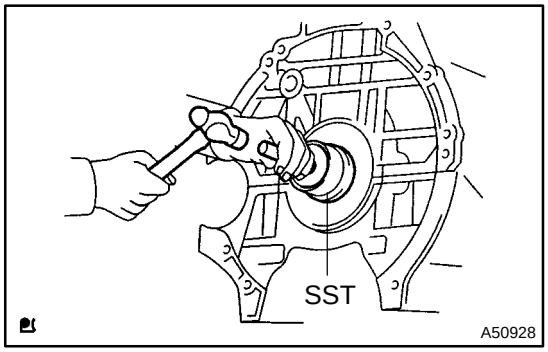

43. INSTALL ENGINE REAR OIL SEAL

(a) Apply a light coat of multipurpose grease No. 2 to the lip of a new oil seal.

NOTICE:
Keep the lip free of foreign objects.

(b) Using SST, uniformly tap in the oil seal until its surface is flush with the cylinder block edge.
SST 09223–56010

NOTICE:
- **Be careful not to tap the oil seal at an angle.**
- **Wipe off extra grease on the crankshaft.**

cardiagn.com

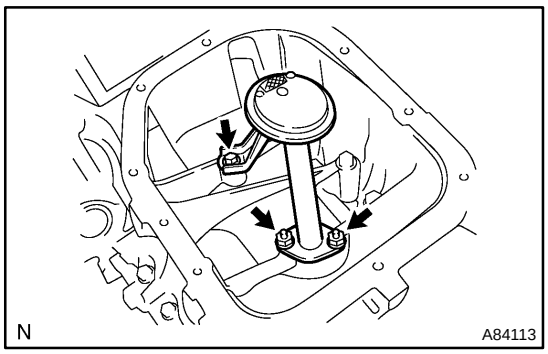

44. INSTALL OIL STRAINER SUB–ASSY

(a) Install a new gasket, then install the oil strainer with the bolt and 2 nuts.
Torque: 11 N·m (112 kgf·cm, 8.1 ft·lbf)

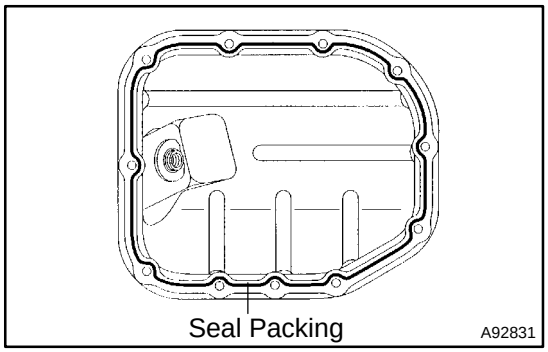

45. INSTALL OIL PAN SUB–ASSY NO.2

(a) Apply a continuous bead of seal packing (Diameter 2.5 to 3.5 mm (0.0984 to 0.1378 in.)) to the oil pan as illustrated.
Seal packing: Part No. 08826–00080 or equivalent

NOTICE:

- **Remove any oil from the contact surface.**
- **Install the oil pan within 3 minutes, and tighten the bolts within 15 minutes after applying seal packing.**
- **Do not expose the seal packing to engine oil within 2 hours of installation.**

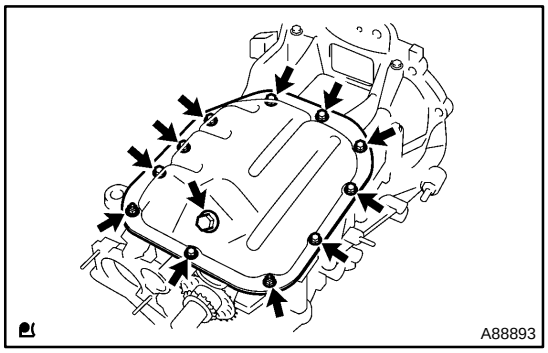

(b) Install the oil pan No. 2 with the 9 bolts and 2 nuts.
Torque: 9.0 N·m (92 kgf·cm, 80 in.·lbf)

(c) Install a new gasket and oil pan drain plug.
Torque: 38 N·m (387 kgf·cm, 28 ft·lbf)

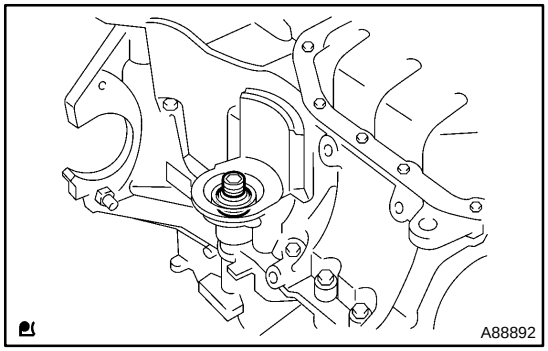

46. INSTALL OIL FILTER UNION

(a) Using a 12 mm socket hexagon wrench, install the oil filter union.
Torque: 30 N·m (306 kgf·cm, 22 ft·lbf)

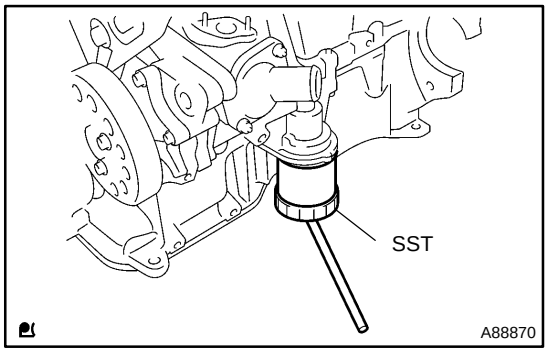

47. INSTALL OIL FILTER SUB–ASSY

(a) Clean the oil filter installation surface of the engine.

(b) Apply a light coat of engine oil to the O–ring of a new oil filter.

(c) Install the O–ring by hand until it contacts the seat.

(d) Using SST, tighten it by an additional 3/4 turn.
SST 09228–06501

cardiagn.com

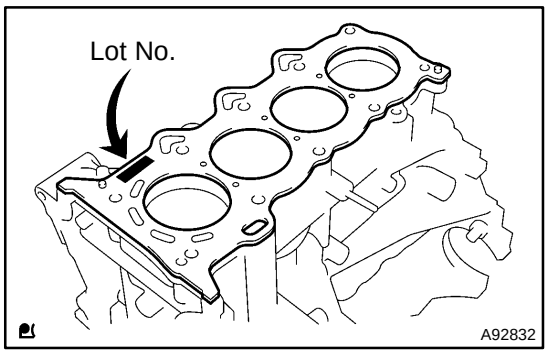

48. INSTALL CYLINDER HEAD GASKET

(a) Place a new head gasket on the cylinder block with the Lot No. facing upward.
Seal packing: Part No. 08826–00080 or equivalent

NOTICE:

- **Remove any oil from the contact surface.**
- **Be careful of the installation direction.**
- **Do not damage the cylinder head gasket when installing.**

49. INSTALL CYLINDER HEAD SUB–ASSY

HINT:
The cylinder head bolts are tightened in 2 successive steps.

(a) Install the cylinder head to the cylinder block.

NOTICE:

Do not damage the cylinder head gasket at the bottom of the cylinder head.

(b) Apply a light coat of engine oil to the threads and seating of the cylinder head bolts.

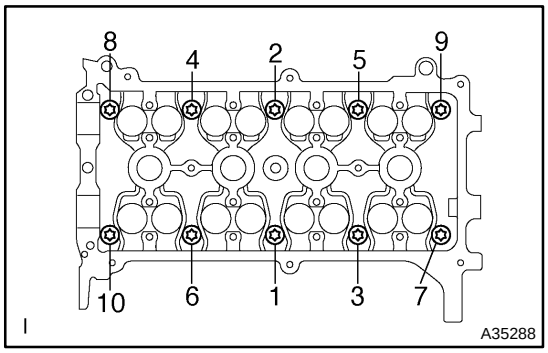

(c) Using several steps, temporarily install the cylinder head bolts with an 8 mm bi–hexagon wrench in the sequence shown in the illustration, then tighten the bolts with the specified torque.
Torque: 29 N·m (296 kgf·cm, 21 ft·lbf)

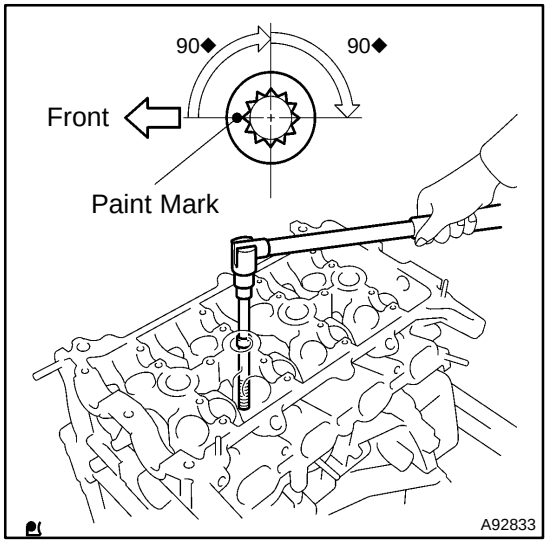

(d) Mark the front of the cylinder head bolts with paint.

(e) Retighten the bolts by additional 90◆ in the same sequence as step (c), then retighten them by one more additional 90◆.

(f) Check that each paint mark is now at the 180◆ angle to the front.

cardiagn.com

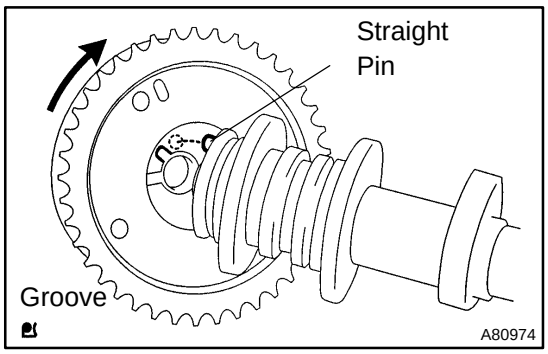

50. INSTALL CAMSHAFT TIMING GEAR ASSY

(a) Put the camshaft timing gear assembly and camshaft together with the straight pin off the groove as illustrated.

(b) Turn the camshaft timing gear assembly in the direction shown (to the left) while pushing it lightly into the camshaft. Push further at the position where the pin fits into the groove.

NOTICE:

Do not turn the camshaft timing gear to the retard direction (to the right).

(c) Check that there is no clearance between the camshaft timing gear assembly and fringe.

(d) Tighten the bolt with the camshaft timing gear fixed.
Torque: 64 N·m (653 kgf·cm, 47 ft·lbf)

NOTICE:

If the camshaft timing gear is locked at the most retarded position, unlock the lock pin inside the timing gear, then tighten the bolts.

(e) Check that the camshaft timing gear moves to the retard direction (to the right) and it is locked at the most retarded position.

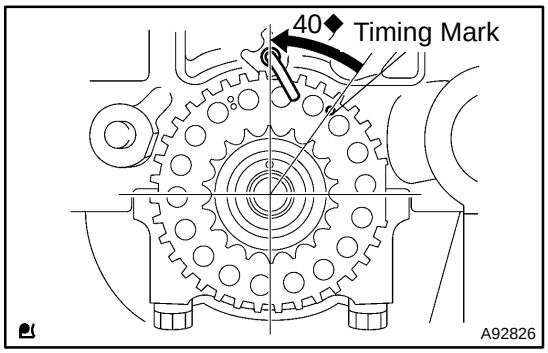

51. INSTALL CAMSHAFT

(a) Turn the crankshaft by 40◆counterclockwise from the TDC/compression.

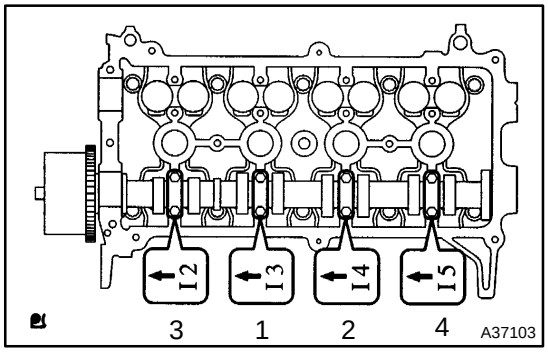

(b) Apply engine oil to the cam and cylinder head journal.

(c) Place the camshaft on the cylinder head with the timing mark on the camshaft timing gear facing upward.

(d) Check the front marks and numbers on the bearing cap No. 2, then tighten the bolts uniformly in several steps in the sequence shown in the illustration.
Torque: 13 N·m (130 kgf·cm, 9.6 ft·lbf)

NOTICE:

Tighten the bolts uniformly keeping the camshaft level.

cardiagn.com

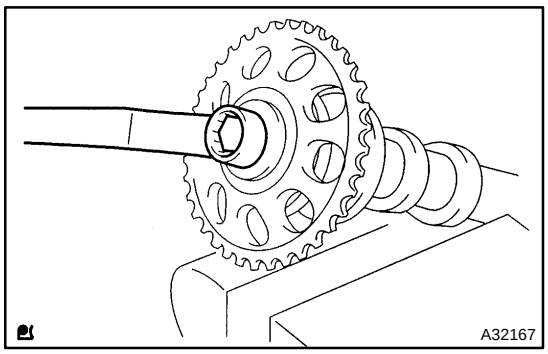

52. INSTALL CAMSHAFT TIMING GEAR OR SPROCKET

(a) Clamp the hexagonal lobe of the camshaft in a vise (using an aluminum protector).

(b) Align the knock pin of the camshaft No. 2 and the pin groove of the camshaft timing gear, then install the camshaft timing gear with the bolt.
Torque: 64 N·m (653 kgf·cm, 47 ft·lbf)

NOTICE:
Do not damage the camshaft.

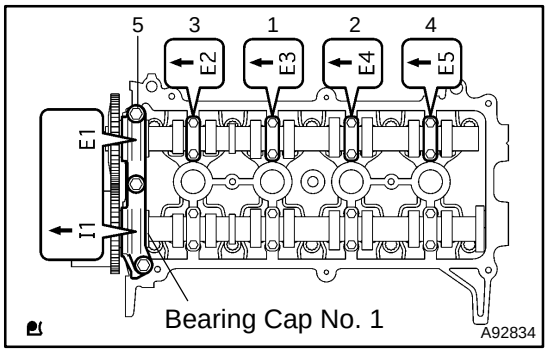

53. INSTALL NO.2 CAMSHAFT

(a) Apply engine oil to the cam and cylinder head journal.

(b) Place the camshaft No. 2 on the cylinder head with the timing mark on the camshaft timing gear facing upward.

(c) Check the front marks and numbers on the bearing cap No. 2, then tighten the bolts uniformly in several steps in the sequence shown in the illustration.
Torque: 13 N·m (130 kgf·cm, 9.6 ft·lbf)

NOTICE:
Tighten the bolts uniformly keeping the camshaft level.

(d) Install the camshaft bearing cap No. 1.
Torque: 23 N·m (235 kgf·cm, 17 ft·lbf)

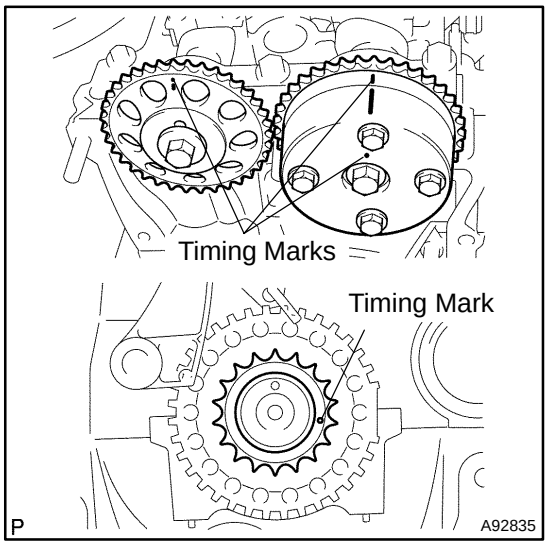

54. INSTALL CHAIN SUB–ASSY

(a) Check that the timing marks are located as illustrated.

cardiagn.com

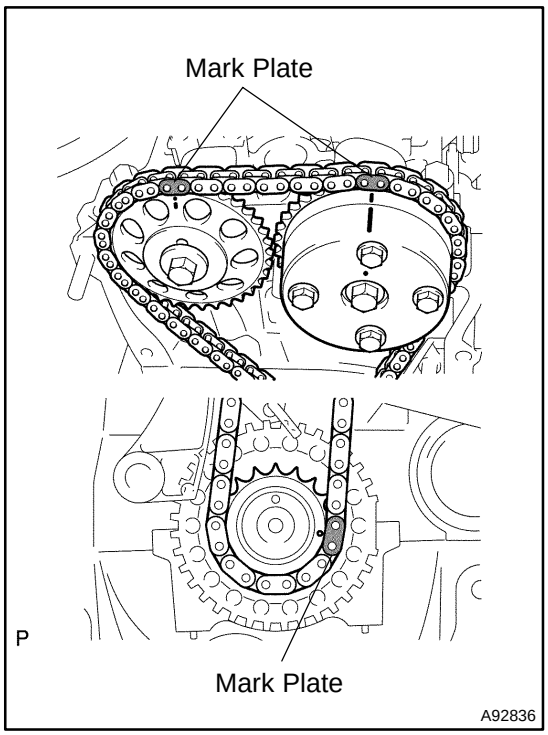

(b) Install the chain so the timing mark and the mark plate of the chain are aligned.

HINT:

- The camshaft side Orange
- The crankshaft side Yellow

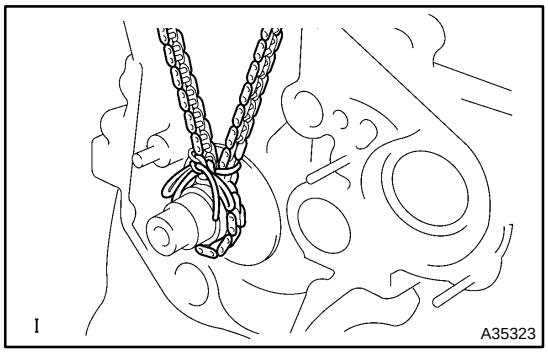

(c) To prevent misalignment of the mark plate and timing mark, tie the chain around the crankshaft timing sprocket with a string.

HINT:

Tie the chain to prevent misalignment of the timing marks.

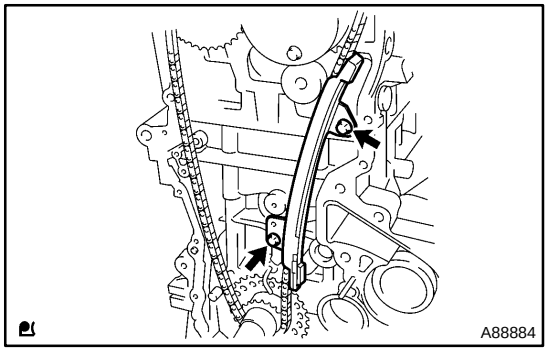

(d) Install the chain vibration damper with the 2 bolts.
Torque: 9.0 N·m (92 kgf·cm, 80 in.·lbf)

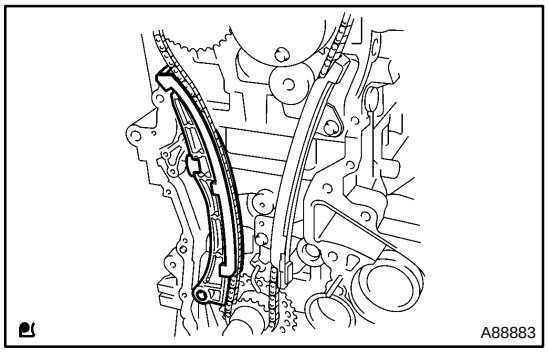

(e) Remove the string, then install the chain tensioner stopper.

cardiagn.com

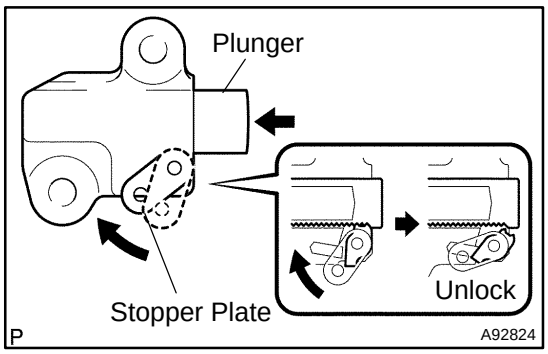

(f) Install the chain tensioner.
(1) Lift up the stopper plate, then unlock the plunger.
(2) Push in the plunger to the end with the plunger unlocked.

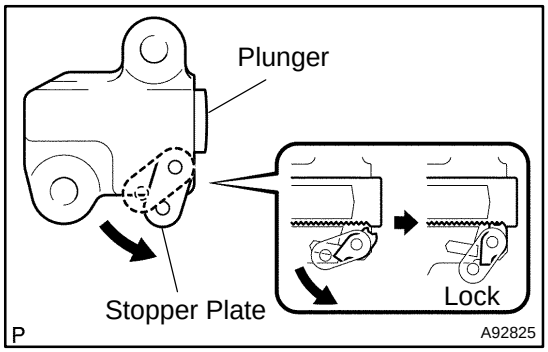

(3) Lift down the stopper plate with the plunger pushed to the end, then lock the plunger.

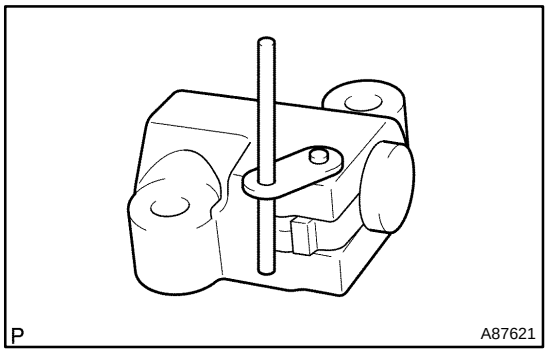

(4) Insert a 3.0 mm (0.118 in.) diameter bar into the hole of the stopper plate with the plunger locked.

HINT:
If the stopper plate is not completely lifted down and a 3.0 mm (0.118 in.) diameter bar cannot be inserted, unlock and pull out the plunger slightly. The stopper plate will be completely lifted down and a 3.0 mm (0.118 in.) diameter bar can be inserted easily.

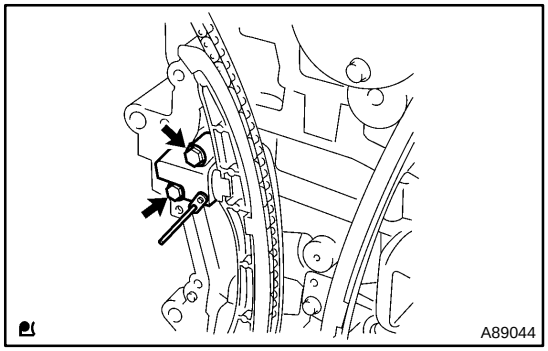

(5) Install the chain tensioner with the 2 bolts.
Torque: 9.0 N·m (92 kgf·cm, 80 in.·lbf)
(6) Remove the 3.0 mm (0.118 in.) diameter bar from the chain tensioner.

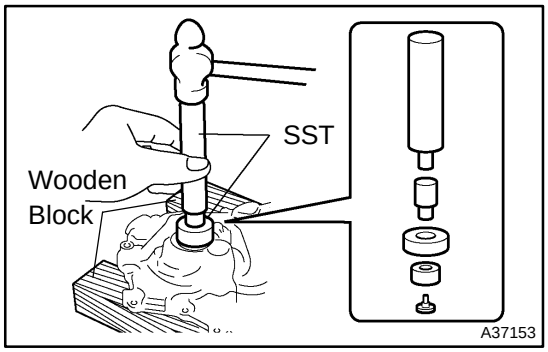

55. INSTALL OIL PUMP SEAL

(a) Using SST, uniformly tap in a new oil seal until its surface is flush with the oil pump edge.
SST 09950–60010 (09951–00250, 09951–00380, 09952–06010), 09950–70010 (09951–07100)

NOTICE:
Be careful not to tap the oil seal at an angle.

cardiagn.com

(b) Apply a ligft coat of multipurpose grease No. 2 to the lip of the new oil seal.

NOTICE:

Keep the lip free of foreign objects.

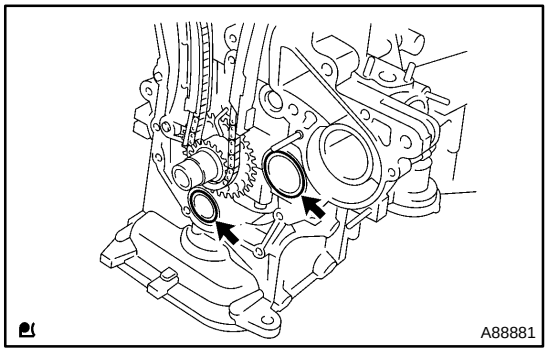

56. INSTALL OIL PUMP ASSY

(a) Install 2 new O–rings to the 2 locations as shown in the illustration.

(b) Apply seal packing to the engine body and oil pump as shown in the illustration below.

Seal packing:

Water pump part part No. 08826–00100 or equivalent

Other part part No. 08826–00080 or equivalent

NOTICE:

- **Remove any oil from the contact surface.**
- **Install the oil pan within 3 minutes, and tighten the bolts within 15 minutes after applying seal packing.**
- **Do not expose the seal packing to engine oil within 2 hours of installation.**

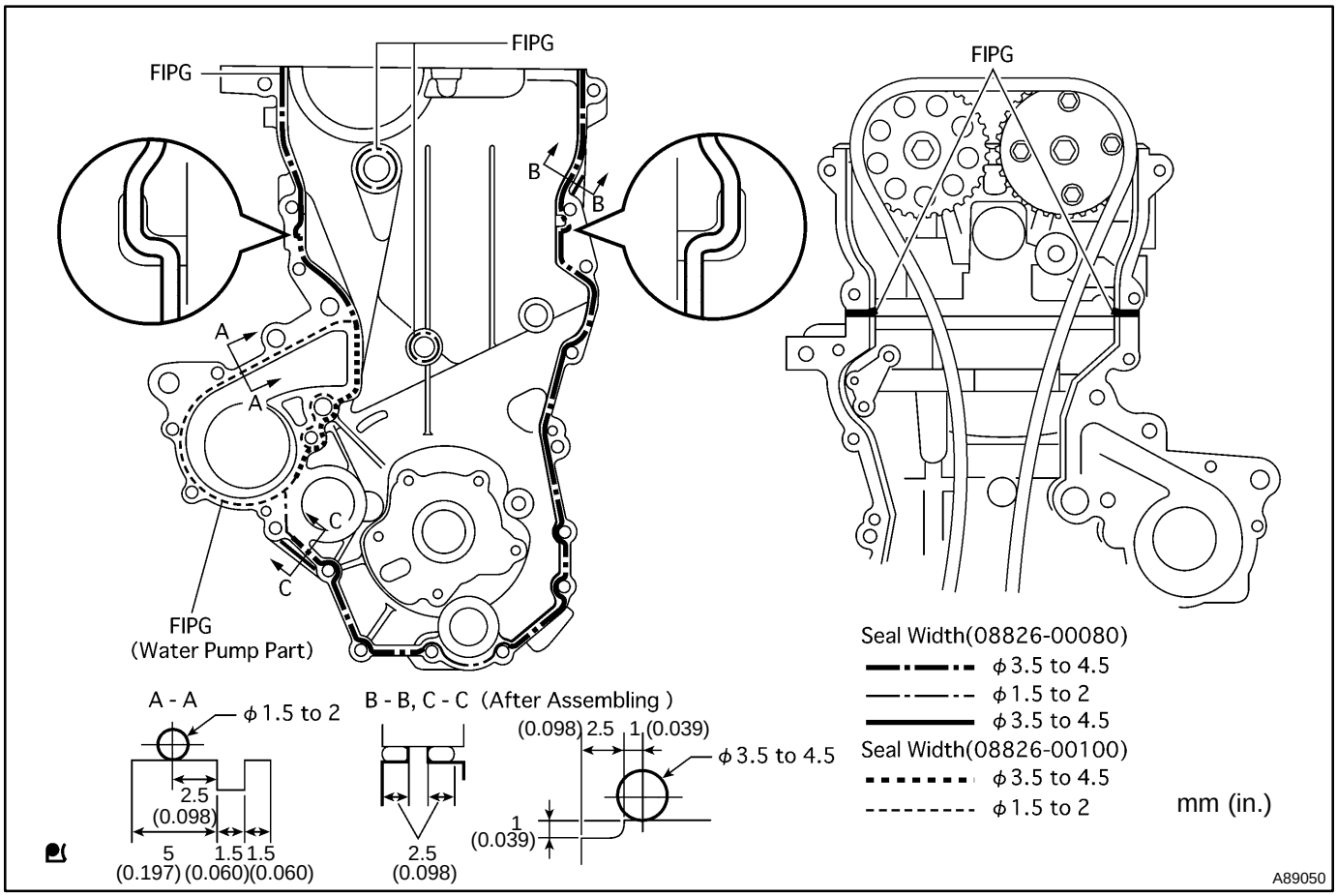

cardiagn.com

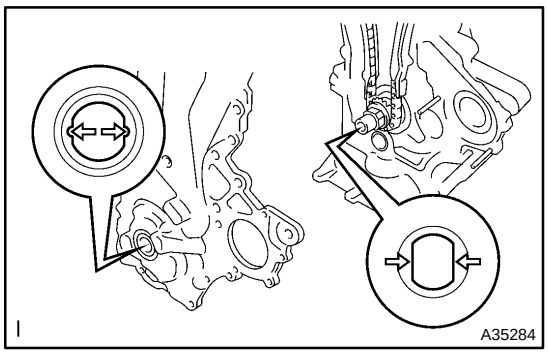

(c) Align the keyway of the oil pump drive rotor with the rectangular portion of the crankshaft, then slide the oil pump assembly into place.

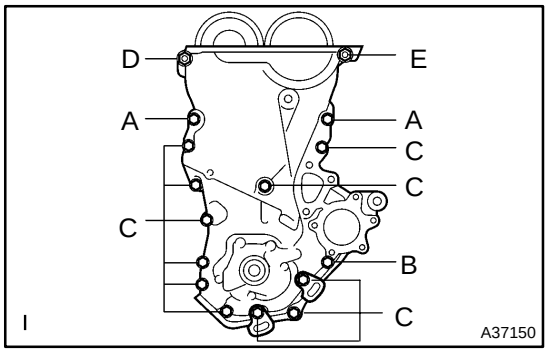

(d) Install the oil pump assembly with the 15 bolts and nut as illustrated.
Torque:
32 N·m (326 kgf·cm, 24 ft·lbf) for Bolt A
11 N·m (112 kgf·cm, 8.1 ft·lbf) for Bolt B
11 N·m (112 kgf·cm, 8.1 ft·lbf) for Bolt C
24 N·m (245 kgf·cm, 18 ft·lbf) for Nut D
24 N·m (245 kgf·cm, 18 ft·lbf) for Bolt E

NOTICE:
- **Be careful that the chain does not contact the seal packing when installing the oil pump assembly.**
- **Install the engine mounting bracket RH and water pump assembly within 15 minutes after installing the oil pump assembly.**

HINT:
The bolt length is as follows.
Bolt A 30 mm (1.18 in.)
Bolt B 35 mm (1.38 in.)
Bolt C 20 mm (0.79 in.)
Bolt E 20 and 14 mm (0.79 and 0.55 in.) double ended bolt

57. INSTALL CRANKSHAFT DAMPER SUB–ASSY

(a) Install the crankshaft straight pin to the crankshaft.

(b) Align the hole of the crankshaft damper with the straight pin, then install the crankshaft damper.

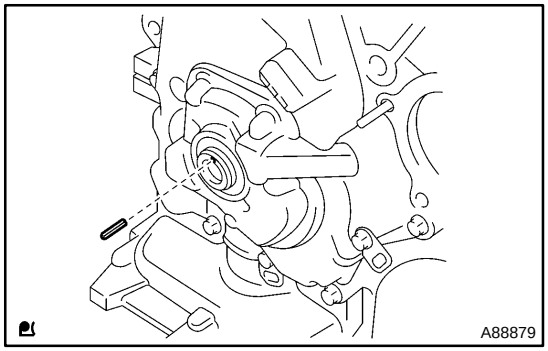

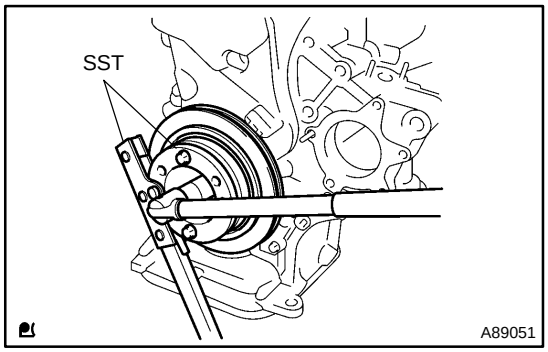

(c) Using SST, hold the crankshaft damper and tighten the crankshaft bolt.
SST 09213–58013 (91111–50845), 09330–00021
Torque: 128 N·m (1305 kgf·cm, 95 ft·lbf)

NOTICE:
When installing SST, be careful that the bolt which holds SST does not interfere with the chain cover.

cardiagn.com

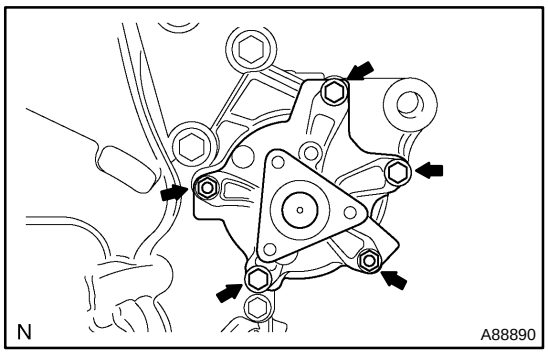

58. INSTALL WATER PUMP ASSY

(a) Install a new gasket, then install the water pump assembly with the 3 bolts and 2 nuts.
Torque: 11 N·m (112 kgf·cm, 8.1 ft·lbf)

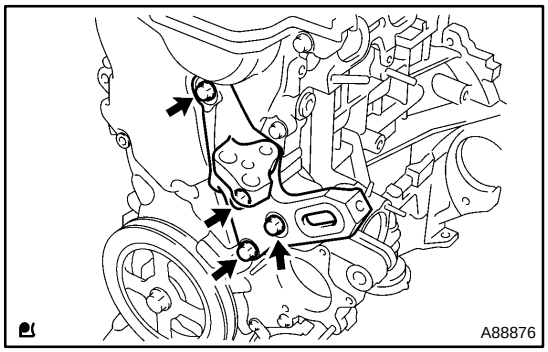

59. INSTALL TRANSVERSE ENGINE ENGINE MOUNTING BRACKET
Torque: 55 N·m (561 kgf·cm, 41 ft·lbf)

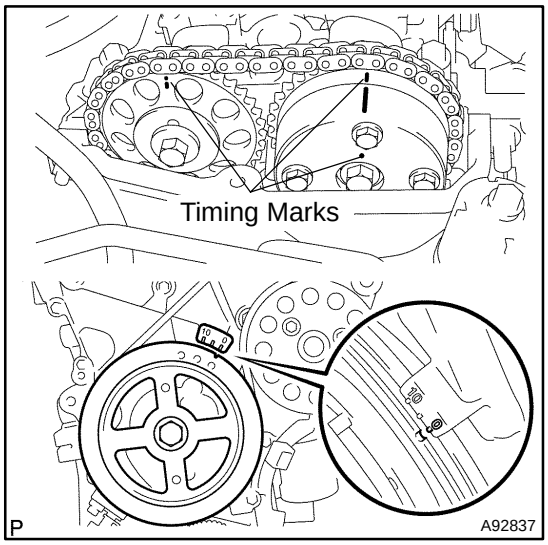

60. INSPECT VALVE CLEARANCE

NOTICE:

Inspect and adjust the valve clearance when the engine is cold.

(a) Set the No. 1 cylinder to the TDC/compression.
  (1) Turn the crankshaft damper clockwise, then align its timing mark notch with the timing mark ”0” of the chain cover.
  (2) Check that the timing marks of the camshaft timing gear are located as illustrated.

HINT:
If not, turn the crankshaft to align the marks.

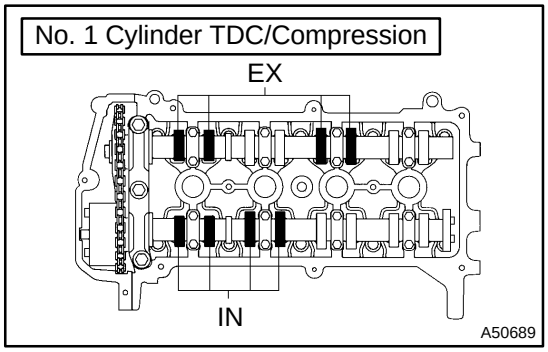

(b) Check the valves indicated in the illustration.
  (1) Using a feeler gauge, measure the clearance between the valve lifter and camshaft.
  Valve clearance (Cold):
  Intake 0.17 to 0.23 mm (0.007 to 0.009 in.)
  Exhaust 0.27 to 0.33 mm (0.011 to 0.013 in.)

HINT:
If the clearance is not as specified, record the out–of–specification measurement, then adjust the valve clearance.

(c) Turn the crankshaft clockwise by 1 complete revolution (360◆) and set the No. 4 cylinder to the TDC/compression.

cardiagn.com

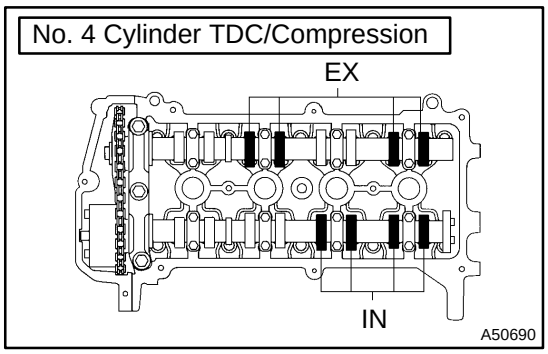

(d) Check the valves indicated in the illustration.
(1) Using a feeler gauge, measure the clearance between the valve lifter and camshaft.
Valve clearance (Cold):
Intake 0.17 to 0.23 mm (0.007 to 0.009 in.)
Exhaust 0.27 to 0.33 mm (0.011 to 0.013 in.)

HINT:
If the clearance is not as specified, record the out–of–specification measurement, then adjust the valve clearance.

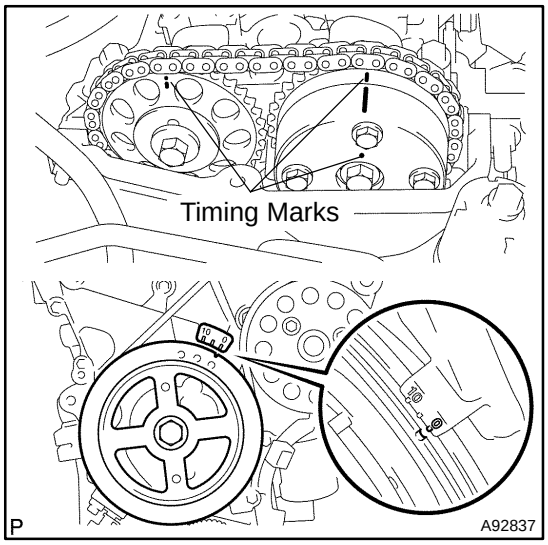

61. ADJUST VALVE CLEARANCE

(a) Set the No. 1 cylinder to the TDC/compression.
(1) Turn the crankshaft damper clockwise, then align its timing mark notch with the timing mark ”0”.
(2) Check that the timing marks of the camshaft timing gear are located as illustrated.

HINT:
If not, turn the crankshaft to align the marks.

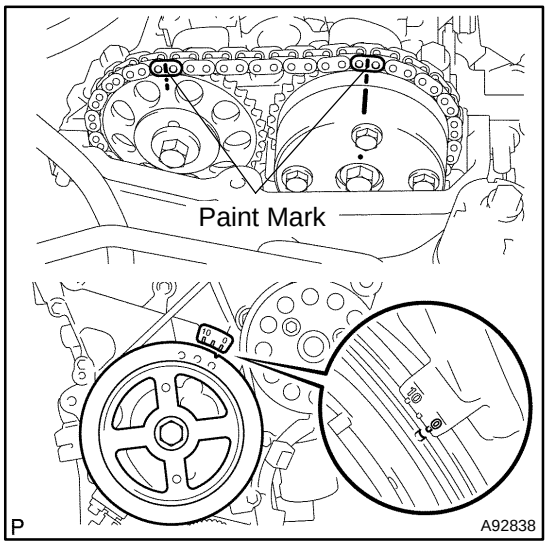

(3) Put the paint marks on the timing chain plates which align with timing marks of the camshaft timing gear.

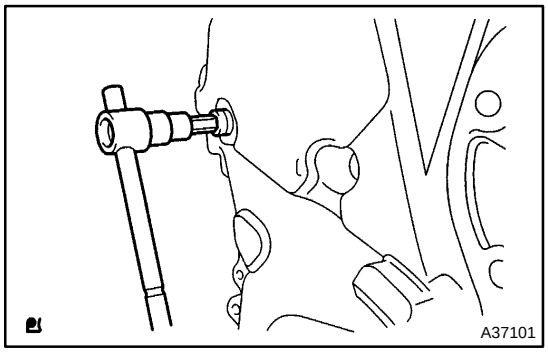

(b) Using 8 mm socket hexagon wrench, remove the service hole screw plug.

cardiagn.com

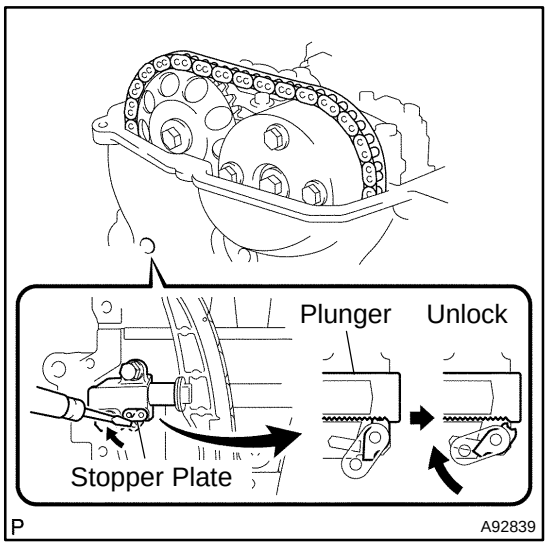

(c) Insert a screwdriver into the service hole of the chain tensioner to hold the stopper plate of the chain tensioner upward.

HINT:

Lifting up the stopper plate of the chain tensioner unlocks the plunger.

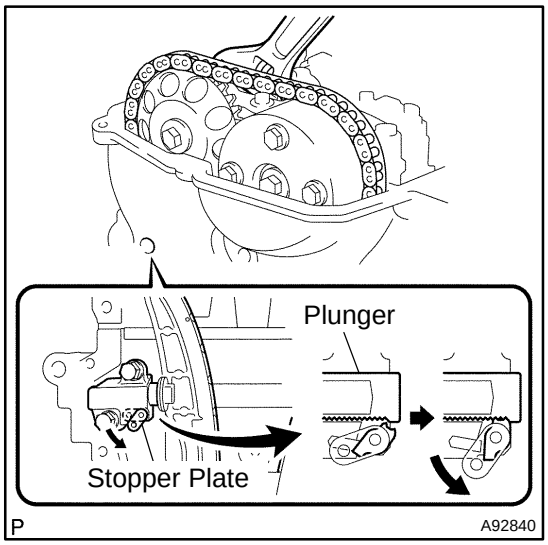

(d) Keeping the stopper plate of the chain tensioner lifted, slightly rotate the hexagonal lobe of the camshaft No. 2 to the right with an adjustable wrench so the plunger of the chain tensioner is pushed.

HINT:

When the camshaft No. 2 is slightly rotated to the right, the plunger is pushed.

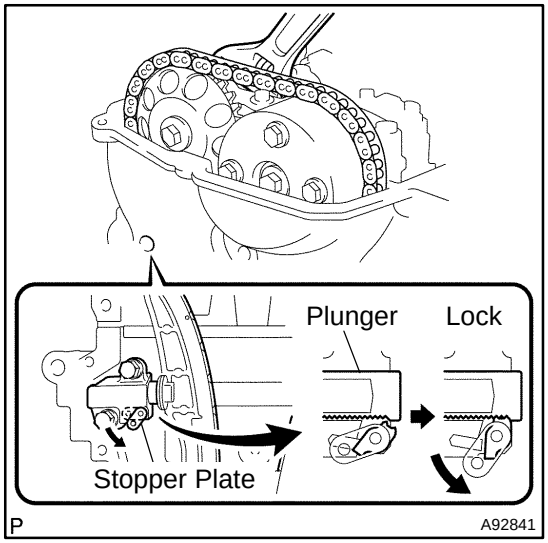

(e) Keeping the adjustable wrench installed, remove the screwdriver with the plunger pushed.

NOTICE:

Do not move the adjustable wrench.

HINT:

Removing the screwdriver lifts down the stopper plate and locks the plunger.

cardiagn.com

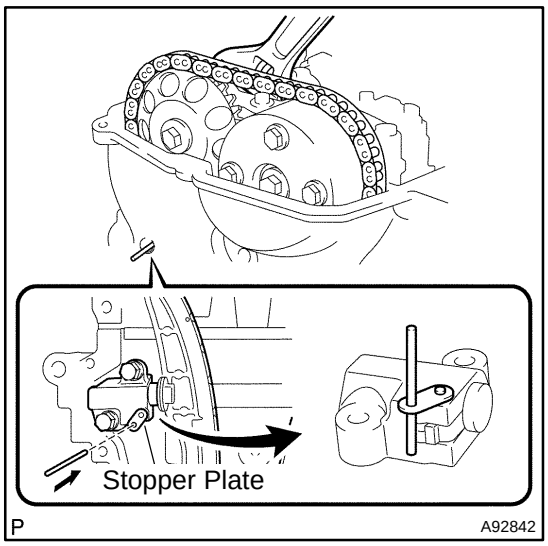

(f) Insert a 3.0 mm (0.118 in.) diameter bar into the hole of the stopper plate with the stopper plate of the chain tensioner lifted down and locked.

HINT:

If a 3.0 mm (0.118 in.) diameter bar cannot be inserted into the hole of the stopper plate, rotate the camshaft No. 2 slightly to the left and right. Then a 3.0 mm (0.118 in.) diameter bar can be inserted easily.

(g) Secure the 3.0 mm (0.118 in.) diameter bar with tape.

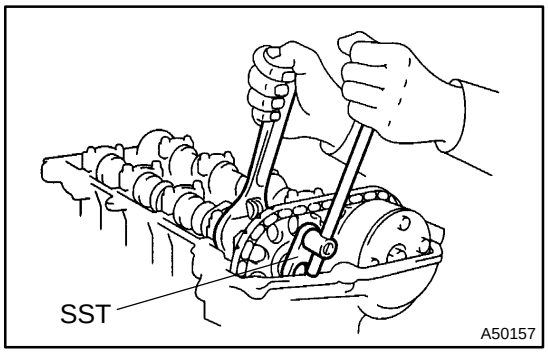

(h) Hold the hexagonal lobe of the camshaft No. 2 with the adjustable wrench.

(i) Using SST, loosen the bolt.
SST 09023–38400

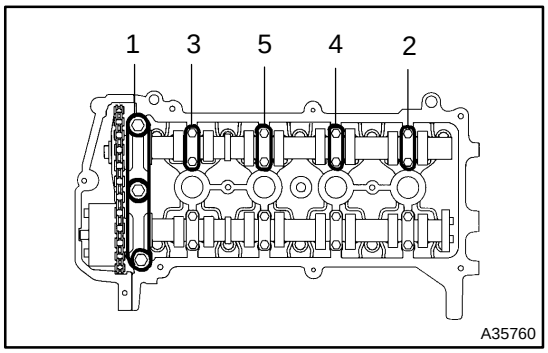

(j) Remove the camshaft bearing caps No. 1 and No. 2 in the sequence shown in the illustration.

NOTICE:

Uniformly loosen the bolts keeping the camshaft No. 2 level.

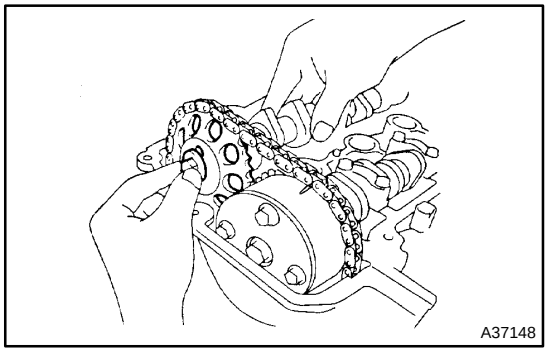

(k) Remove the bolt when the camshaft No. 2 is lifted slightly, then remove the camshaft No. 2 and camshaft timing gear.

cardiagn.com

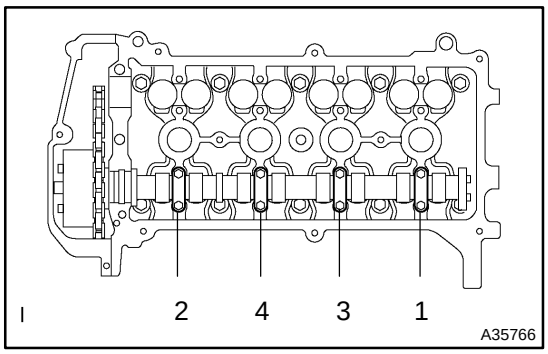

(l) Remove the camshaft bearing caps No. 2 in the sequence shown in the illustration.

NOTICE:

Uniformly loosen the bolts keeping the camshaft level.

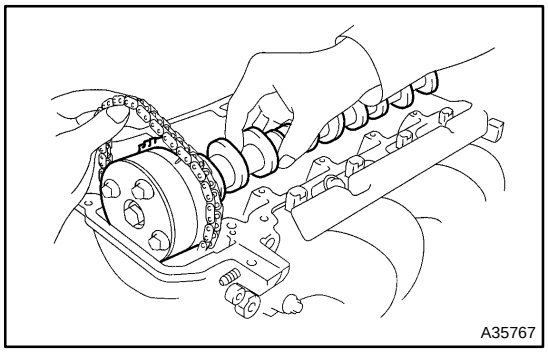

(m) Hold the timing chain by hand, then remove the camshaft.

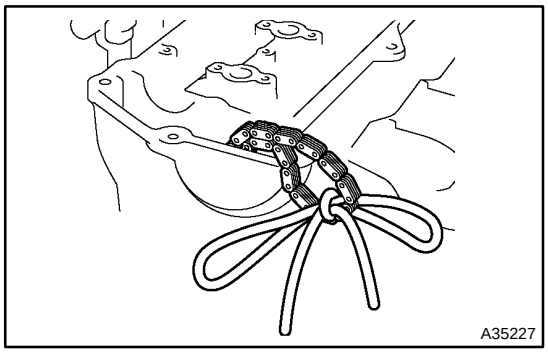

(n) Tie the timing chain with a string or wire.

NOTICE:

Prevent foreign object from getting into the engine compartment with a shop rag.

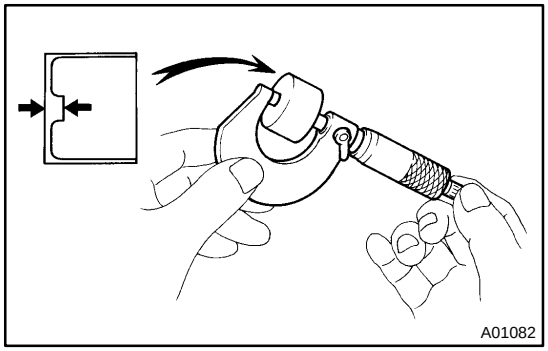

(o) Using a micrometer, measure the thickness of the removed valve lifter.

(p) Calculate the thickness of the valve lifter so that the valve clearance comes within the specified value.

A	Thickness of new lifter
B	Thickness of used lifter
C	Measured valve clearance

Specified value (Cold):

Intake A = B + (C – 0.20 mm (0.008 in.))

Exhaust A = B + (C – 0.30 mm (0.012 in.))

cardiagn.com

(q) Select a new lifter with a thickness as close to the calculated values as possible .

EXAMPLE (Intake):
Measured valve clearance = 0.40 mm (0.0158 in.)
0.40 mm (0.0158 in.) – 0.20 mm (0.0079 in.) = 0.20 mm (0.0079 in.)
(Measured – Specification = Excess clearance)
Used lifter measurement = 5.25 mm (0.2067 in.)
0.20 mm (0.0079 in.) + 5.25 mm (0.2067 in.) = 5.45 mm (0.2146 in.)
(Excess clearance + Used lifter = Ideal new lifter)
Closest new lifter = 5.45 mm (0.2146 in.)
Select No. 46 lifter (5.46 mm (0.2150 in.))

HINT:
- The lifters are available in 35 sizes in increments of 0.020 mm (0.0008 in.), from 5.060 mm (0.1992 in.) to 5.740 mm (0.2260 in.)
- Refer to the New Lifter Thickness table on the next 2 pages.

cardiagn.com

Valve Lifter Selection Chart (Intake)

Measured clearance mm (in.) \ Installed lifter thickness mm (in.)	5.060 (0.1992)	5.080 (0.2000)	5.100 (0.2008)	5.120 (0.2016)	5.140 (0.2024)	5.160 (0.2031)	5.180 (0.2039)	5.200 (0.2047)	5.210 (0.2051)	5.220 (0.2055)	5.230 (0.2059)	5.240 (0.2063)	5.250 (0.2067)	5.260 (0.2071)	5.270 (0.2075)	5.280 (0.2079)	5.290 (0.2083)	5.300 (0.2087)	5.310 (0.2091)	5.320 (0.2094)	5.330 (0.2098)	5.340 (0.2102)	5.350 (0.2106)	5.360 (0.2110)	5.370 (0.2114)	5.380 (0.2118)	5.390 (0.2122)	5.400 (0.2126)	5.410 (0.2130)	5.420 (0.2134)	5.430 (0.2138)	5.440 (0.2142)	5.450 (0.2146)	5.460 (0.2150)	5.470 (0.2154)	5.480 (0.2157)	5.490 (0.2161)	5.500 (0.2165)	5.510 (0.2169)	5.520 (0.2173)	5.530 (0.2177)	5.540 (0.2181)	5.550 (0.2185)	5.560 (0.2189)	5.570 (0.2193)	5.580 (0.2197)	5.590 (0.2201)	5.600 (0.2205)	5.620 (0.2213)	5.640 (0.2220)	5.660 (0.2228)	5.680 (0.2236)	5.700 (0.2244)	5.720 (0.2252)	5.740 (0.2260)
0.000 – 0.030 (0.0000 – 0.0012)											06	06	06	08	10	10	12	12	14	14	16	16	18	18	20	20	22	22	24	24	26	26	28	28	30	30	32	32	34	34	36	36	38	38	40	40	42	42	44	46	48	50	52	54	56
0.031 – 0.050 (0.0012 – 0.0020)								06	06	06	08	08	10	10	12	12	14	14	16	16	18	18	20	20	22	22	24	24	26	26	28	28	30	30	32	32	34	34	36	36	38	38	40	40	42	42	44	44	46	48	50	52	54	56	58
0.051 – 0.070 (0.0020 – 0.0028)							06	06	08	08	10	10	12	12	14	14	16	16	18	18	20	20	22	22	24	24	26	26	28	28	30	30	32	32	34	34	36	36	38	38	40	40	42	42	44	44	46	46	48	50	52	54	56	58	60
0.071 – 0.090 (0.0028 – 0.0035)						06	06	08	10	10	12	12	14	14	16	16	18	18	20	20	22	22	24	24	26	26	28	28	30	30	32	32	34	34	36	36	38	38	40	40	42	42	44	44	46	46	48	48	50	52	54	56	58	60	62
0.091 – 0.110 (0.0036 – 0.0043)					06	06	08	10	12	12	14	14	16	16	18	18	20	20	22	22	24	24	26	26	28	28	30	30	32	32	34	34	36	36	38	38	40	40	42	42	44	44	46	46	48	48	50	50	52	54	56	58	60	62	64
0.111 – 0.130 (0.0044 – 0.0051)				06	06	08	10	12	14	14	16	16	18	18	20	20	22	22	24	24	26	26	28	28	30	30	32	32	34	34	36	36	38	38	40	40	42	42	44	44	46	46	48	48	50	50	52	52	54	56	58	60	62	64	66
0.131 – 0.149 (0.0052 – 0.0059)			06	06	08	10	12	14	16	16	18	18	20	20	22	22	24	24	26	26	28	28	30	30	32	32	34	34	36	36	38	38	40	40	42	42	44	44	46	46	48	48	50	50	52	52	54	54	56	58	60	62	64	66	68
0.150 – 0.250 (0.0059 – 0.0098)																																																								
0.251 – 0.270 (0.0099 – 0.0106)	12	14	16	18	20	22	24	26	28	28	30	30	32	32	34	34	36	36	38	38	40	40	42	42	44	44	46	46	48	48	50	50	52	52	54	54	56	56	58	58	60	60	62	62	64	64	66	66	68	70	72	74	74		
0.271 – 0.290 (0.0107 – 0.0114)	14	16	18	20	22	24	26	28	30	30	32	32	34	34	36	36	38	38	40	40	42	42	44	44	46	46	48	48	50	50	52	52	54	54	56	56	58	58	60	60	62	62	64	64	66	66	68	68	70	72	74	74			
0.291 – 0.310 (0.0115 – 0.0122)	16	18	20	22	24	26	28	30	32	32	34	34	36	36	38	38	40	40	42	42	44	44	46	46	48	48	50	50	52	52	54	54	56	56	58	58	60	60	62	62	64	64	66	66	68	68	70	70	72	74	74				
0.311 – 0.330 (0.0122 – 0.0130)	18	20	22	24	26	28	30	32	34	34	36	36	38	38	40	40	42	42	44	44	46	46	48	48	50	50	52	52	54	54	56	56	58	58	60	60	62	62	64	64	66	66	68	68	70	70	72	72	74	74					
0.331 – 0.350 (0.0130 – 0.0138)	20	22	24	26	28	30	32	34	36	36	38	38	40	40	42	42	44	44	46	46	48	48	50	50	52	52	54	54	56	56	58	58	60	60	62	62	64	64	66	66	68	68	70	70	72	72	74	74	74						
0.351 – 0.370 (0.0138 – 0.0146)	22	24	26	28	30	32	34	36	38	38	40	40	42	42	44	44	46	46	48	48	50	50	52	52	54	54	56	56	58	58	60	60	62	62	64	64	66	66	68	68	70	70	72	72	74	74	74								
0.371 – 0.390 (0.0146 – 0.0154)	24	26	28	30	32	34	36	38	40	40	42	42	44	44	46	46	48	48	50	50	52	52	54	54	56	56	58	58	60	60	62	62	64	64	66	66	68	68	70	70	72	72	74	74	74	74									
0.391 – 0.410 (0.0154 – 0.0161)	26	28	30	32	34	36	38	40	42	42	44	44	46	46	48	48	50	50	52	52	54	54	56	56	58	58	60	60	62	62	64	64	66	66	68	68	70	70	72	72	74	74	74	74											
0.411 – 0.430 (0.0162 – 0.0169)	28	30	32	34	36	38	40	42	44	44	46	46	48	48	50	50	52	52	54	54	56	56	58	58	60	60	62	62	64	64	66	66	68	68	70	70	72	72	74	74	74	74													
0.431 – 0.450 (0.0170 – 0.0177)	30	32	34	36	38	40	42	44	46	46	48	48	50	50	52	52	54	54	56	56	58	58	60	60	62	62	64	64	66	66	68	68	70	70	72	72	74	74	74	74															
0.451 – 0.470 (0.0178 – 0.0185)	32	34	36	38	40	42	44	46	48	48	50	50	52	52	54	54	56	56	58	58	60	60	62	62	64	64	66	66	68	68	70	70	72	72	74	74	74	74																	
0.471 – 0.490 (0.0185 – 0.0193)	34	36	38	40	42	44	46	48	50	50	52	52	54	54	56	56	58	58	60	60	62	62	64	64	66	66	68	68	70	70	72	72	74	74	74	74																			
0.491 – 0.510 (0.0193 – 0.0201)	36	38	40	42	44	46	48	50	52	52	54	54	56	56	58	58	60	60	62	62	64	64	66	66	68	68	70	70	72	72	74	74	74	74																					
0.511 – 0.530 (0.0201 – 0.0209)	38	40	42	44	46	48	50	52	54	54	56	56	58	58	60	60	62	62	64	64	66	66	68	68	70	70	72	72	74	74	74	74																					
0.531 – 0.550 (0.0209 – 0.0217)	40	42	44	46	48	50	52	54	56	56	58	58	60	60	62	62	64	64	66	66	68	68	70	70	72	72	74	74	74	74																									
0.551 – 0.570 (0.0217 – 0.0224)	42	44	46	48	50	52	54	56	58	58	60	60	62	62	64	64	66	66	68	68	70	70	72	72	74	74	74	74																											
0.571 – 0.590 (0.0225 – 0.0232)	44	46	48	50	52	54	56	58	60	60	62	62	64	64	66	66	68	68	70	70	72	72	74	74	74	74																											
0.591 – 0.610 (0.0233 – 0.0240)	46	48	50	52	54	56	58	60	62	62	64	64	66	66	68	68	70	70	72	72	74	74	74	74																											
0.611 – 0.630 (0.0241 – 0.0248)	48	50	52	54	56	58	60	62	64	64	66	66	68	68	70	70	72	72	74	74	74	74																											
0.631 – 0.650 (0.0248 – 0.0256)	50	52	54	56	58	60	62	64	66	66	68	68	70	70	72	72	74	74	74	74																											
0.651 – 0.670 (0.0256 – 0.0264)	52	54	56	58	60	62	64	66	68	68	70	70	72	72	74	74	74	74																													
0.671 – 0.690 (0.0264 – 0.0272)	54	56	58	60	62	64	66	68	70	70	72	72	74	74	74	74																															
0.691 – 0.710 (0.0272 – 0.0280)	56	58	60	62	64	66	68	70	72	72	74	74	74	74																																	
0.711 – 0.730 (0.0280 – 0.0287)	58	60	62	64	66	68	70	72	74	74	74	74																																			
0.731 – 0.750 (0.0288 – 0.0295)	60	62	64	66	68	70	72	74	74	74																																					
0.751 – 0.770 (0.0296 – 0.0303)	62	64	66	68	70	72	74	74																																							
0.771 – 0.790 (0.0304 – 0.0311)	64	66	68	70	72	74	74																																								
0.791 – 0.810 (0.0311 – 0.0319)	66	68	70	72	74	74																																									
0.811 – 0.830 (0.0319 – 0.0327)	68	70	72	74	74																																										
0.831 – 0.850 (0.0327 – 0.0335)	70	72	74	74																																											
0.851 – 0.870 (0.0335 – 0.0343)	72	74	74																																												
0.871 – 0.890 (0.0343 – 0.0350)	74	74																																													
0.891 – 0.910 (0.0351 – 0.0358)	74																																														

Intake valve clearance (Cold):
0.17 to 0.23 mm (0.007 to 0.009 in.)

EXAMPLE: The 5.250 mm (0.2067 in.) lifter is installed, and the measured clearance is 0.400 mm (0.0158 in.).
Replace the 5.250 mm (0.2067 in.) lifter with a new No. 46 lifter.

New Lifter Thickness mm (in.)

Lifter No.	Thickness	Lifter No.	Thickness	Lifter No.	Thickness
06	5.060 (0.1992)	30	5.300 (0.2087)	54	5.540 (0.2181)
08	5.080 (0.2000)	32	5.320 (0.2094)	56	5.560 (0.2189)
10	5.100 (0.2008)	34	5.340 (0.2102)	58	5.580 (0.2197)
12	5.120 (0.2016)	36	5.360 (0.2110)	60	5.600 (0.2205)
14	5.140 (0.2024)	38	5.380 (0.2118)	62	5.620 (0.2213)
16	5.160 (0.2031)	40	5.400 (0.2126)	64	5.640 (0.2220)
18	5.180 (0.2039)	42	5.420 (0.2134)	66	5.660 (0.2228)
20	5.200 (0.2047)	44	5.440 (0.2142)	68	5.680 (0.2236)
22	5.220 (0.2055)	46	5.460 (0.2150)	70	5.700 (0.2244)
24	5.240 (0.2063)	48	5.480 (0.2157)	72	5.720 (0.2252)
26	5.260 (0.2071)	50	5.500 (0.2165)	74	5.740 (0.2260)
28	5.280 (0.2079)	52	5.520 (0.2173)		

A92520

cardiagn.com

Valve Lifter Selection Chart (Exhaust)

Measured clearance mm (in.) \ Installed lifter thickness mm (in.)	5.060 (0.1992)	5.080 (0.2000)	5.100 (0.2008)	5.120 (0.2016)	5.140 (0.2024)	5.160 (0.2031)	5.180 (0.2039)	5.200 (0.2047)	5.210 (0.2051)	5.220 (0.2055)	5.230 (0.2059)	5.240 (0.2063)	5.250 (0.2067)	5.260 (0.2071)	5.270 (0.2075)	5.280 (0.2079)	5.290 (0.2083)	5.300 (0.2087)	5.310 (0.2091)	5.320 (0.2094)	5.330 (0.2098)	5.340 (0.2102)	5.350 (0.2106)	5.360 (0.2110)	5.370 (0.2114)	5.380 (0.2118)	5.390 (0.2122)	5.400 (0.2126)	5.410 (0.2130)	5.420 (0.2134)	5.430 (0.2138)	5.440 (0.2142)	5.450 (0.2146)	5.460 (0.2150)	5.470 (0.2154)	5.480 (0.2157)	5.490 (0.2161)	5.500 (0.2165)	5.510 (0.2169)	5.520 (0.2173)	5.530 (0.2177)	5.540 (0.2181)	5.550 (0.2185)	5.560 (0.2189)	5.570 (0.2193)	5.580 (0.2197)	5.590 (0.2201)	5.600 (0.2205)	5.620 (0.2213)	5.640 (0.2220)	5.660 (0.2228)	5.680 (0.2236)	5.700 (0.2244)	5.720 (0.2252)	5.740 (0.2260)
0.000 – 0.030 (0.0000 – 0.0012)																					06	06	08	08	10	10	12	12	14	14	16	16	18	18	20	20	22	22	24	24	26	26	28	28	30	30	32	32	34	36	38	40	42	44	46
0.031 – 0.050 (0.0012 – 0.0020)																		06	06	06	08	08	10	10	12	12	14	14	16	16	18	18	20	20	22	22	24	24	26	26	28	28	30	30	32	32	34	34	36	38	40	42	44	46	48
0.051 – 0.070 (0.0020 – 0.0028)																06	06	06	08	08	10	10	12	12	14	14	16	16	18	18	20	20	22	22	24	24	26	26	28	28	30	30	32	32	34	34	36	36	38	40	42	44	46	48	50
0.071 – 0.090 (0.0028 – 0.0035)														06	06	06	08	08	10	10	12	12	14	14	16	16	18	18	20	20	22	22	24	24	26	26	28	28	30	30	32	32	34	34	36	36	38	38	40	42	44	46	48	50	52
0.091 – 0.110 (0.0036 – 0.0043)												06	06	06	08	08	10	10	12	12	14	14	16	16	18	18	20	20	22	22	24	24	26	26	28	28	30	30	32	32	34	34	36	36	38	38	40	40	42	44	46	48	50	52	54
0.111 – 0.130 (0.0044 – 0.0051)											06	06	08	08	10	10	12	12	14	14	16	16	18	18	20	20	22	22	24	24	26	26	28	28	30	30	32	32	34	34	36	36	38	38	40	40	42	42	44	46	48	50	52	54	56
0.131 – 0.150 (0.0052 – 0.0059)										06	08	08	10	10	12	12	14	14	16	16	18	18	20	20	22	22	24	24	26	26	28	28	30	30	32	32	34	34	36	36	38	38	40	40	42	42	44	44	46	48	50	52	54	56	58
0.151 – 0.170 (0.0059 – 0.0067)								06	08	08	10	10	12	12	14	14	16	16	18	18	20	20	22	22	24	24	26	26	28	28	30	30	32	32	34	34	36	36	38	38	40	40	42	42	44	44	46	46	48	50	52	54	56	58	60
0.171 – 0.190 (0.0067 – 0.0075)						06	06	08	10	10	12	12	14	14	16	16	18	18	20	20	22	22	24	24	26	26	28	28	30	30	32	32	34	34	36	36	38	38	40	40	42	42	44	44	46	46	48	48	50	52	54	56	58	60	62
0.191 – 0.210 (0.0075 – 0.0083)					06	06	08	10	12	12	14	14	16	16	18	18	20	20	22	22	24	24	26	26	28	28	30	30	32	32	34	34	36	36	38	38	40	40	42	42	44	44	46	46	48	48	50	50	52	54	56	58	60	62	64
0.211 – 0.230 (0.0083 – 0.0091)				06	06	08	10	12	14	14	16	16	18	18	20	20	22	22	24	24	26	26	28	28	30	30	32	32	34	34	36	36	38	38	40	40	42	42	44	44	46	46	48	48	50	50	52	52	54	56	58	60	62	64	66
0.231 – 0.249 (0.0091 – 0.0098)			06	06	08	10	12	14	16	16	18	18	20	20	22	22	24	24	26	26	28	28	30	30	32	32	34	34	36	36	38	38	40	40	42	42	44	44	46	46	48	48	50	50	52	52	54	54	56	58	60	62	64	66	68
0.250 – 0.350 (0.0098 – 0.0138)																																																								
0.351 – 0.370 (0.0138 – 0.0146)	12	14	16	18	20	22	24	26	28	28	30	30	32	32	34	34	36	36	38	38	40	40	42	42	44	44	46	46	48	48	50	50	52	52	54	54	56	56	58	58	60	60	62	62	64	64	66	66	68	70	72	74	74		
0.371 – 0.390 (0.0146 – 0.0154)	14	16	18	20	22	24	26	28	30	30	32	32	34	34	36	36	38	38	40	40	42	42	44	44	46	46	48	48	50	50	52	52	54	54	56	56	58	58	60	60	62	62	64	64	66	66	68	68	70	72	74	74			
0.391 – 0.410 (0.0154 – 0.0161)	16	18	20	22	24	26	28	30	32	32	34	34	36	36	38	38	40	40	42	42	44	44	46	46	48	48	50	50	52	52	54	54	56	56	58	58	60	60	62	62	64	64	66	66	68	68	70	70	72	74	74				
0.411 – 0.430 (0.0162 – 0.0169)	18	20	22	24	26	28	30	32	34	34	36	36	38	38	40	40	42	42	44	44	46	46	48	48	50	50	52	52	54	54	56	56	58	58	60	60	62	62	64	64	66	66	68	68	70	70	72	72	74	74					
0.431 – 0.450 (0.0170 – 0.0177)	20	22	24	26	28	30	32	34	36	36	38	38	40	40	42	42	44	44	46	46	48	48	50	50	52	52	54	54	56	56	58	58	60	60	62	62	64	64	66	68	68	70	70	72	72	74	74	74	74						
0.451 – 0.470 (0.0178 – 0.0185)	22	24	26	28	30	32	34	36	38	38	40	40	42	42	44	44	46	46	48	48	50	50	52	52	54	54	56	56	58	58	60	60	62	62	64	64	66	66	68	68	70	70	72	72	74	74	74	74							
0.471 – 0.490 (0.0185 – 0.0193)	24	26	28	30	32	34	36	38	40	40	42	42	44	44	46	46	48	48	50	50	52	52	54	54	56	56	58	58	60	60	62	62	64	64	66	66	68	68	70	70	72	72	74	74	74	74									
0.491 – 0.510 (0.0193 – 0.0201)	26	28	30	32	34	36	38	40	42	42	44	44	46	46	48	48	50	50	52	52	54	54	56	56	58	58	60	60	62	62	64	64	66	66	68	68	70	70	72	72	74	74	74	74											
0.511 – 0.530 (0.0201 – 0.0209)	28	30	32	34	36	38	40	42	44	44	46	46	48	48	50	50	52	52	54	54	56	56	58	58	60	60	62	62	64	64	66	66	68	68	70	70	72	72	74	74	74	74													
0.531 – 0.550 (0.0209 – 0.0217)	30	32	34	36	38	40	42	44	46	46	48	48	50	50	52	52	54	54	56	56	58	58	60	60	62	62	64	64	66	66	68	68	70	70	72	72	74	74	74	74															
0.551 – 0.570 (0.0217 – 0.0224)	32	34	36	38	40	42	44	46	48	48	50	50	52	52	54	54	56	56	58	58	60	60	62	62	64	64	66	66	68	68	70	70	72	72	74	74	74	74																	
0.571 – 0.590 (0.0225 – 0.0232)	34	36	38	40	42	44	46	48	50	50	52	52	54	54	56	56	58	58	60	60	62	62	64	64	66	66	68	68	70	70	72	72	74	74	74	74																			
0.591 – 0.610 (0.0233 – 0.0240)	36	38	40	42	44	46	48	50	52	52	54	54	56	56	58	58	60	60	62	62	64	64	66	66	68	68	70	70	72	72	74	74	74	74																					
0.611 – 0.630 (0.0241 – 0.0248)	38	40	42	44	46	48	50	52	54	54	56	56	58	58	60	60	62	62	64	64	66	66	68	68	70	70	72	72	74	74	74	74																					
0.631 – 0.650 (0.0248 – 0.0256)	40	42	44	46	48	50	52	54	56	56	58	58	60	60	62	62	64	64	66	66	68	68	70	70	72	72	74	74	74	74																									
0.651 – 0.670 (0.0256 – 0.0264)	42	44	46	48	50	52	54	56	58	58	60	60	62	62	64	64	66	66	68	68	70	70	72	72	74	74	74	74																											
0.671 – 0.690 (0.0264 – 0.0272)	44	46	48	50	52	54	56	58	60	60	62	62	64	64	66	66	68	68	70	70	72	72	74	74	74	74																											
0.691 – 0.710 (0.0272 – 0.0280)	46	48	50	52	54	56	58	60	62	62	64	64	66	66	68	68	70	70	72	72	74	74	74	74																											
0.711 – 0.730 (0.0280 – 0.0287)	48	50	52	54	56	58	60	62	64	64	66	66	68	68	70	70	72	72	74	74	74	74																											
0.731 – 0.750 (0.0288 – 0.0295)	50	52	54	56	58	60	62	64	66	66	68	68	70	70	72	72	74	74	74	74																													
0.751 – 0.770 (0.0296 – 0.0303)	52	54	56	58	60	62	64	66	68	68	70	70	72	72	74	74	74	74																															
0.771 – 0.790 (0.0304 – 0.0311)	54	56	58	60	62	64	66	68	70	70	72	72	74	74	74	74																																	
0.791 – 0.810 (0.0311 – 0.0319)	56	58	60	62	64	66	68	70	72	72	74	74	74	74																																			
0.811 – 0.830 (0.0319 – 0.0327)	58	60	62	64	66	68	70	72	74	74	74	74																																					
0.831 – 0.850 (0.0327 – 0.0335)	60	62	64	66	68	70	72	74	74	74																																							
0.851 – 0.870 (0.0335 – 0.0343)	62	64	66	68	70	72	74	74																																									
0.871 – 0.890 (0.0343 – 0.0350)	64	66	68	70	72	74	74																																										
0.891 – 0.910 (0.0351 – 0.0358)	66	68	70	72	74	74																																											
0.911 – 0.930 (0.0359 – 0.0366)	68	70	72	74	74																																												
0.931 – 0.950 (0.0367 – 0.0374)	70	72	74	74																																													
0.951 – 0.970 (0.0374 – 0.0382)	72	74	74																																														
0.971 – 0.990 (0.0382 – 0.0390)	74	74																																															
0.991 – 1.010 (0.0390 – 0.0398)	74																																																

New Lifter Thickness mm (in.)

Lifter No.	Thickness	Lifter No.	Thickness	Lifter No.	Thickness
06	5.060 (0.1992)	30	5.300 (0.2087)	54	5.540 (0.2181)
08	5.080 (0.2000)	32	5.320 (0.2094)	56	5.560 (0.2189)
10	5.100 (0.2008)	34	5.340 (0.2102)	58	5.580 (0.2197)
12	5.120 (0.2016)	36	5.360 (0.2110)	60	5.600 (0.2205)
14	5.140 (0.2024)	38	5.380 (0.2118)	62	5.620 (0.2213)
16	5.160 (0.2031)	40	5.400 (0.2126)	64	5.640 (0.2220)
18	5.180 (0.2039)	42	5.420 (0.2134)	66	5.660 (0.2228)
20	5.200 (0.2047)	44	5.440 (0.2142)	68	5.680 (0.2236)
22	5.220 (0.2055)	46	5.460 (0.2150)	70	5.700 (0.2244)
24	5.240 (0.2063)	48	5.480 (0.2157)	72	5.720 (0.2252)
26	5.260 (0.2071)	50	5.500 (0.2165)	74	5.740 (0.2260)
28	5.280 (0.2079)	52	5.520 (0.2173)		

Exhaust valve clearance (Cold):

0.27 to 0.33 mm (0.011 to 0.013 in.)

EXAMPLE: The 5.340 mm (0.2102 in.) lifter is installed, and the measured clearance is 0.440 mm (0.0173 in.).
Replace the 5.340 mm (0.2102 in.) lifter with a new No. 48 lifter.

A92521

cardiagn.com

(r) Install the selected valve lifter.

(s) Apply engine oil to the cam and cylinder head journal.

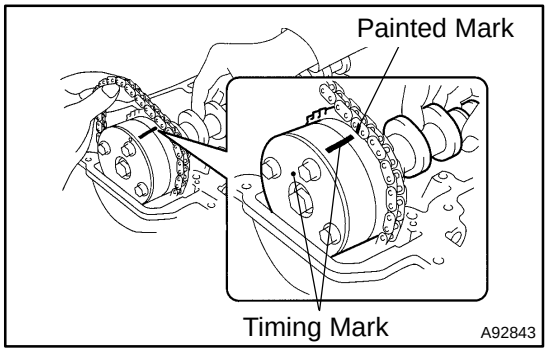

(t) Hold the chain as illustrated, then install the camshaft and camshaft timing gear assembly so that the pain mark of the chain and the timing mark of the camshaft timing gear assembly are aligned.

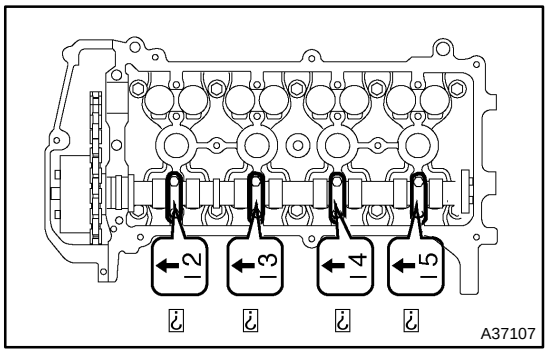

(u) Check the front marks and numbers on the bearing cap No. 2, then tighten the bolts uniformly in several steps in the sequence shown in the illustration.

Torque: 13 N·m (130 kgf·cm, 9.6 ft·lbf)

NOTICE:

Tighten the bolts uniformly keeping the camshaft level.

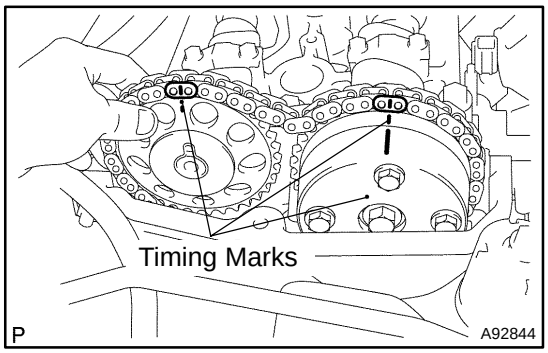

(v) Hold the chain as illustrated, then install the camshaft No. 2 and camshaft timing gear so that the pain mark of the chain and the timing mark of the camshaft timing gear are aligned.

(w) Align the knock pin of the camshaft No. 2 with the pin groove of the camshaft timing gear.

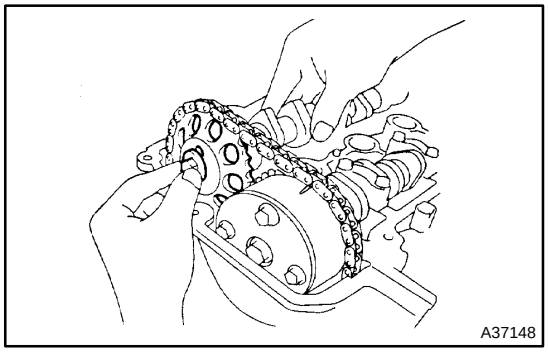

(x) Temporarily tighten the camshaft timing chain with the bolt.

cardiagn.com

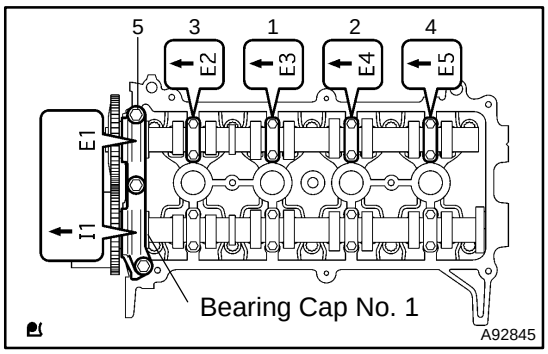

(y) Check the front marks and numbers on the bearing caps No. 1 and No. 2, then tighten the bolts uniformly in several steps in the sequence shown in the illustration.
Torque:
23 N·m (235 kgf·cm, 17 ft·lbf) for Bearing Cap No. 1
13 N·m (130 kgf·cm, 9.6 ft·lbf) for Bearing Cap No. 2

NOTICE:
Tighten the bolts uniformly keeping the camshaft level.

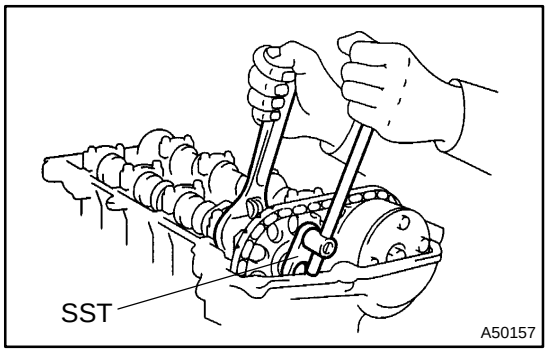

(z) Hold the hexagonal lobe of the camshaft No. 2 with the adjustable wrench.
(aa) Using SST, tighten the bolt.
SST 09023–38400
Torque: 64 N·m (653 kgf·cm, 47 ft·lbf)

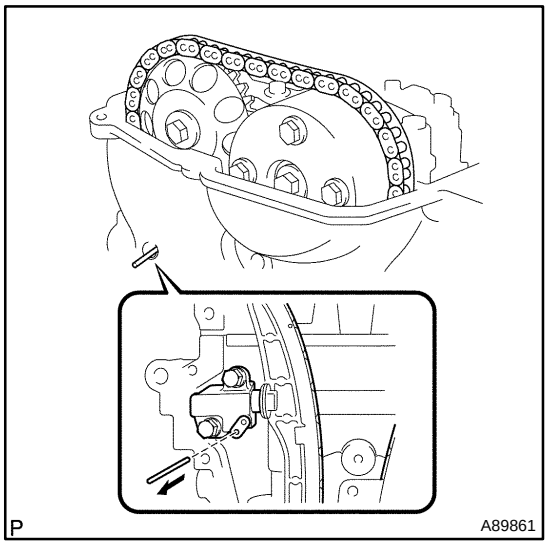

(ab) Remove the 3.0 mm (0.118 in.) diameter bar from the chain tensioner.

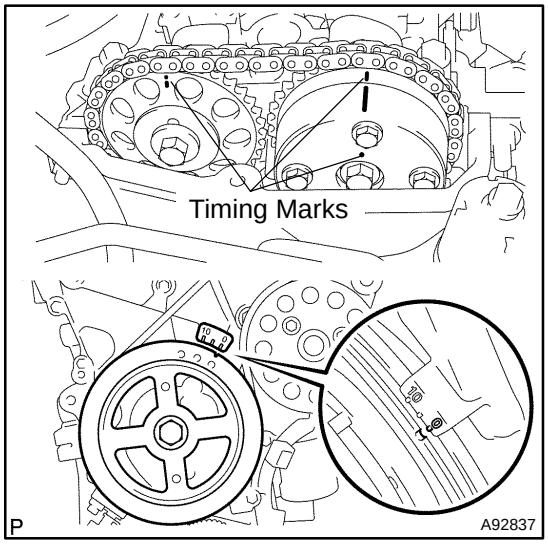

(ac) Turn the crankshaft damper clockwise, then align its timing mark notch with the timing mark ”0”.
(ad) Check that the timing marks are located as illustrated.

cardiagn.com

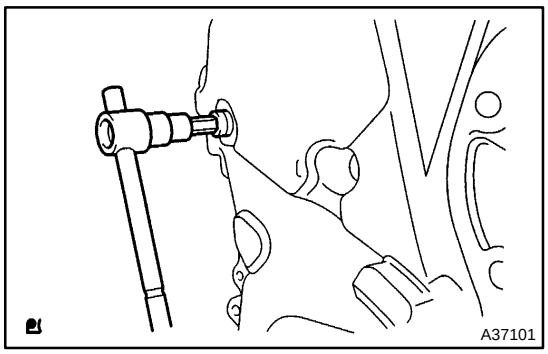

(ae) Apply adhesive to 2 or 3 threads of the service hole screw plug bolt end.
Adhesive:
Part No. 08833–00070, THREE BOND 1324, or equivalent

NOTICE:
Remove any oil from the bolts and bolt holes.

(af) Using an 8 mm socket hexagon wrench, install the service hole screw plug.
Torque: 15 N·m (153 kgf·cm, 11 ft·lbf)

62. INSTALL FUEL INJECTOR ASSY

(a) Install a new O–ring to the fuel injector.
(b) Apply gasoline to the O–ring.

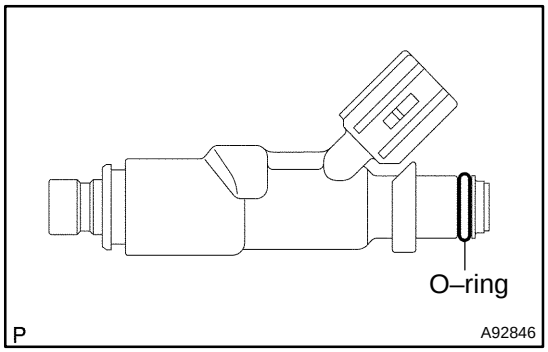

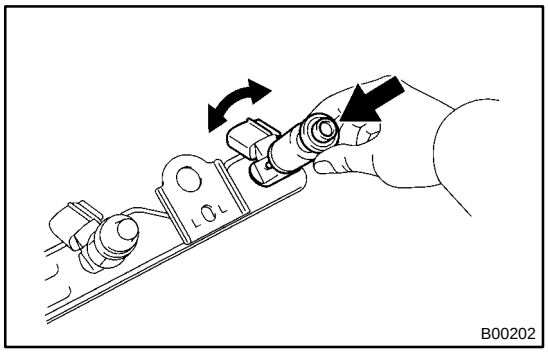

(c) While turning the fuel injector clockwise and counter-clockwise, push it to the fuel delivery pipe.

NOTICE:
- **Do not twist the O–ring.**
- **After installing the fuel injector, check that it turns smoothly. If not, replace the O–ring with a new one and reinstall the fuel injector.**

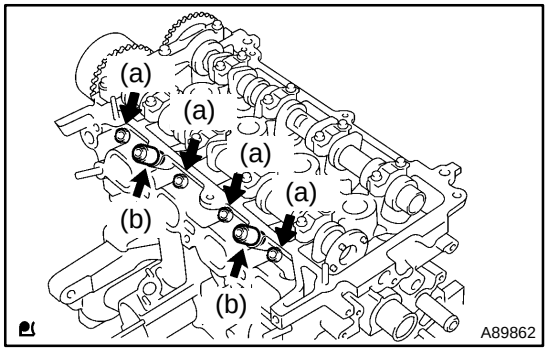

63. INSTALL FUEL DELIVERY PIPE SUB–ASSY

(a) Install the 4 new insulators to the cylinder head.
(b) Install the 2 delivery pipe spacers to the cylinder head.

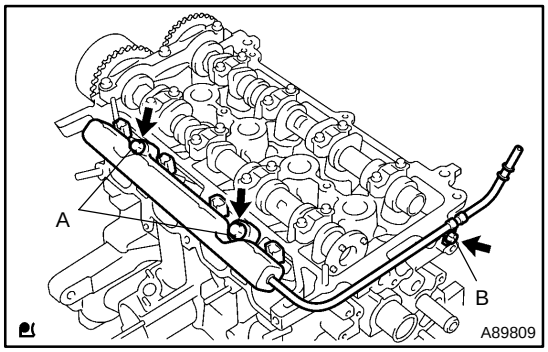

(c) Install the delivery pipe together with the injectors using the 3 bolts.
Torque:
19 N·m (194 kgf·cm, 14 ft·lbf) for Bolt A
9.0 N·m (92 kgf·cm, 80 in.·lbf) for Bolt B

NOTICE:
- **Do not drop the fuel injectors.**
- **After installing the delivery pipe, check that it is installed securely by turning the fuel injectors.**

cardiagn.com

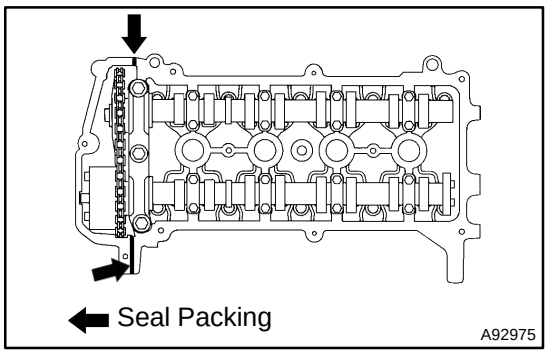

64. INSTALL CYLINDER HEAD COVER SUB–ASSY

(a) Install the cylinder head gasket to the cylinder head cover.

(b) Apply seal packing to the 2 locations as shown in the illustration, then install the cylinder head cover.
Seal packing: Part No. 08826–00080 or equivalent

NOTICE:

- **Remove any oil from the contact surface.**
- **Install the cylinder head cover within 3 minutes after applying seal packing.**

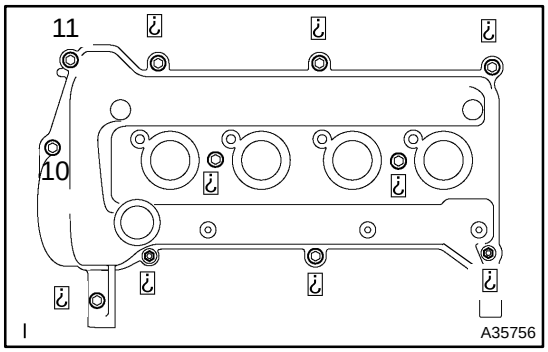

(c) Temporarily tighten the 9 bolts and 2 nuts on the cylinder head cover.

(d) Using several steps, tighten the bolts and nuts with the specified torque in the sequence shown in the illustration.
Torque: 10 N·m (102 kgf·cm, 7.4 ft·lbf)

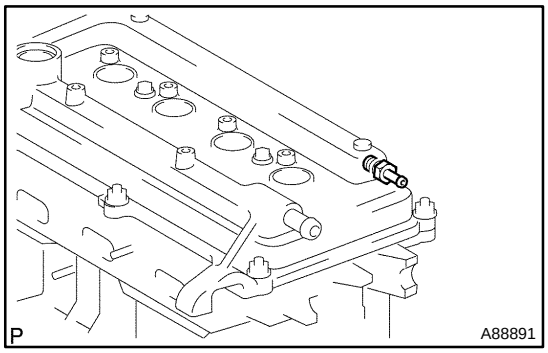

65. INSTALL VENTILATION VALVE SUB–ASSY
Torque: 27 N·m (275 kgf·cm, 20 ft·lbf)

66. INSTALL OIL FILLER CAP GASKET

(a) Install the oil filler cap gasket to the oil filler cap.

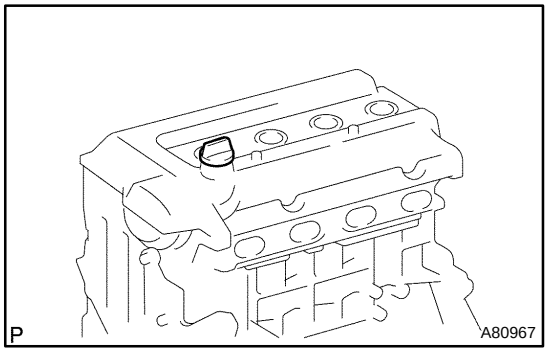

67. INSTALL OIL FILLER CAP SUB–ASSY

cardiagn.com

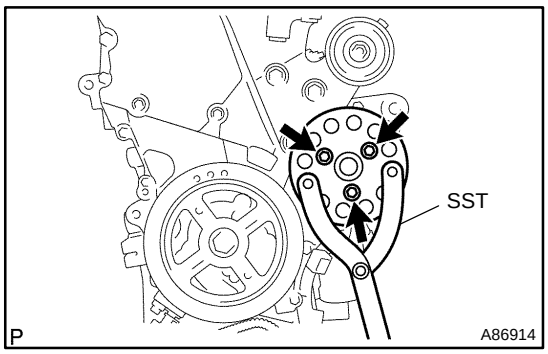

68. INSTALL WATER PUMP PULLEY

(a) Temporarily install the water pump pulley with the 3 bolts.

(b) Using SST, secure the water pump pulley.
SST 09960–10010 (09962–01000, 09963–00600)

(c) Tighten the 3 bolts with the specified torque.
Torque: 15 N·m (153 kgf·cm, 11 ft·lbf)

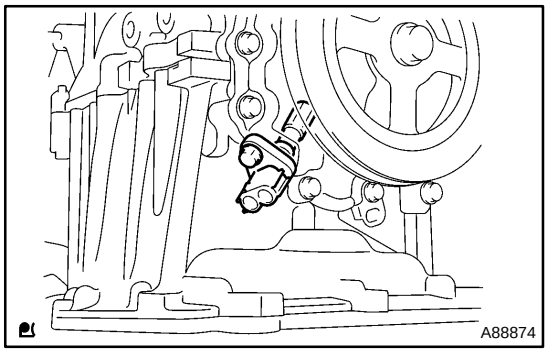

69. INSTALL CRANK POSITION SENSOR

(a) Apply a light coat of engine oil to the O–ring.

NOTICE:

If the O–ring is damaged, replace the crank position sensor.

(b) Install the crank position sensor with the bolt.
Torque: 7.5 N·m (76 kgf·cm, 66 in.·lbf)

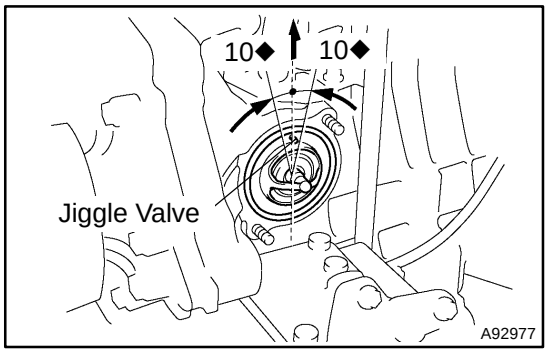

70. INSTALL THERMOSTAT

(a) Install a new gasket to the thermostat.

(b) Install the thermostat with the jiggle valve facing upward.

HINT:

The jiggle valve may be set within 10◆at either side as illustrated.

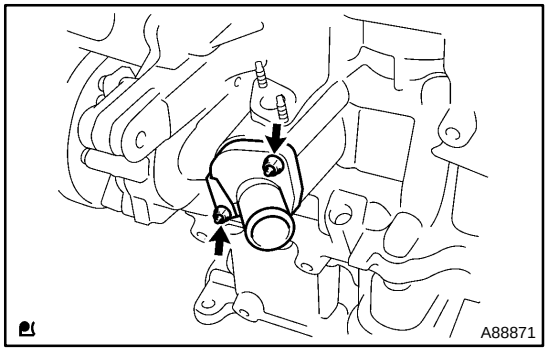

(c) Install the water inlet with the 2 nuts.
Torque: 9.0 N·m (92 kgf·cm, 80 in.·lbf)

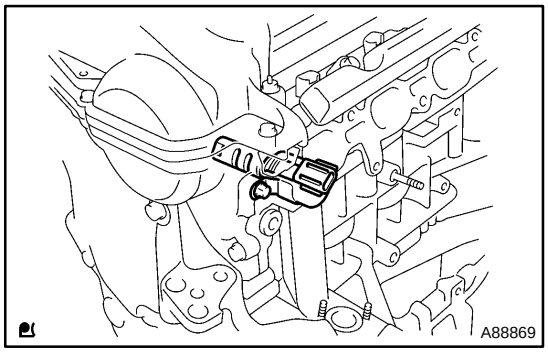

71. INSTALL CAMSHAFT TIMING OIL CONTROL VALVE ASSY

(a) Apply a light coat of engine oil to the O–ring.

(b) Install the camshaft timing oil control valve assembly with the bolt.
Torque: 7.5 N·m (76 kgf·cm, 66 in.·lbf)

cardiagn.com

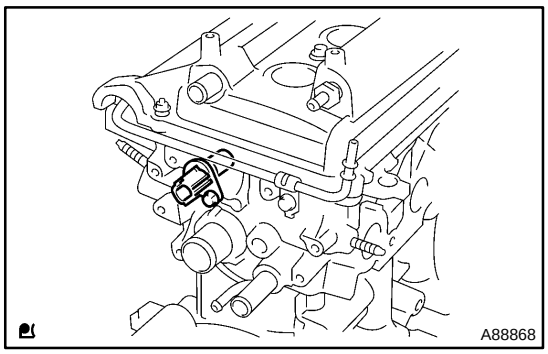

72. INSTALL CAM POSITION SENSOR

(a) Apply a light coat of engine oil to the O–ring.

NOTICE:

If the O–ring is damaged, replace the camshaft position sensor.

(b) Install the camshaft position sensor with the bolt.
Torque: 8.0 N·m (82 kgf·cm, 71 in.·lbf)

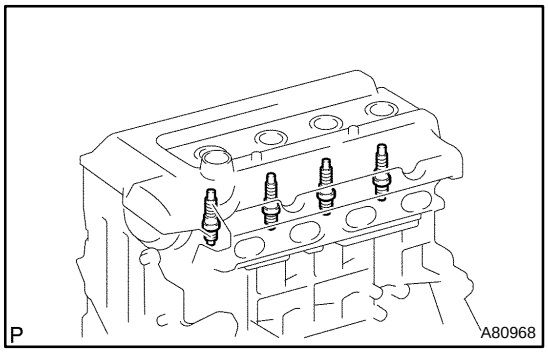

73. INSTALL SPARK PLUG
Torque: 18 N·m (184 kgf·cm, 13 ft·lbf)

cardiagn.com

CHAIN SUB–ASSY (1NZ–FXE)

141OP–01

COMPONENTS

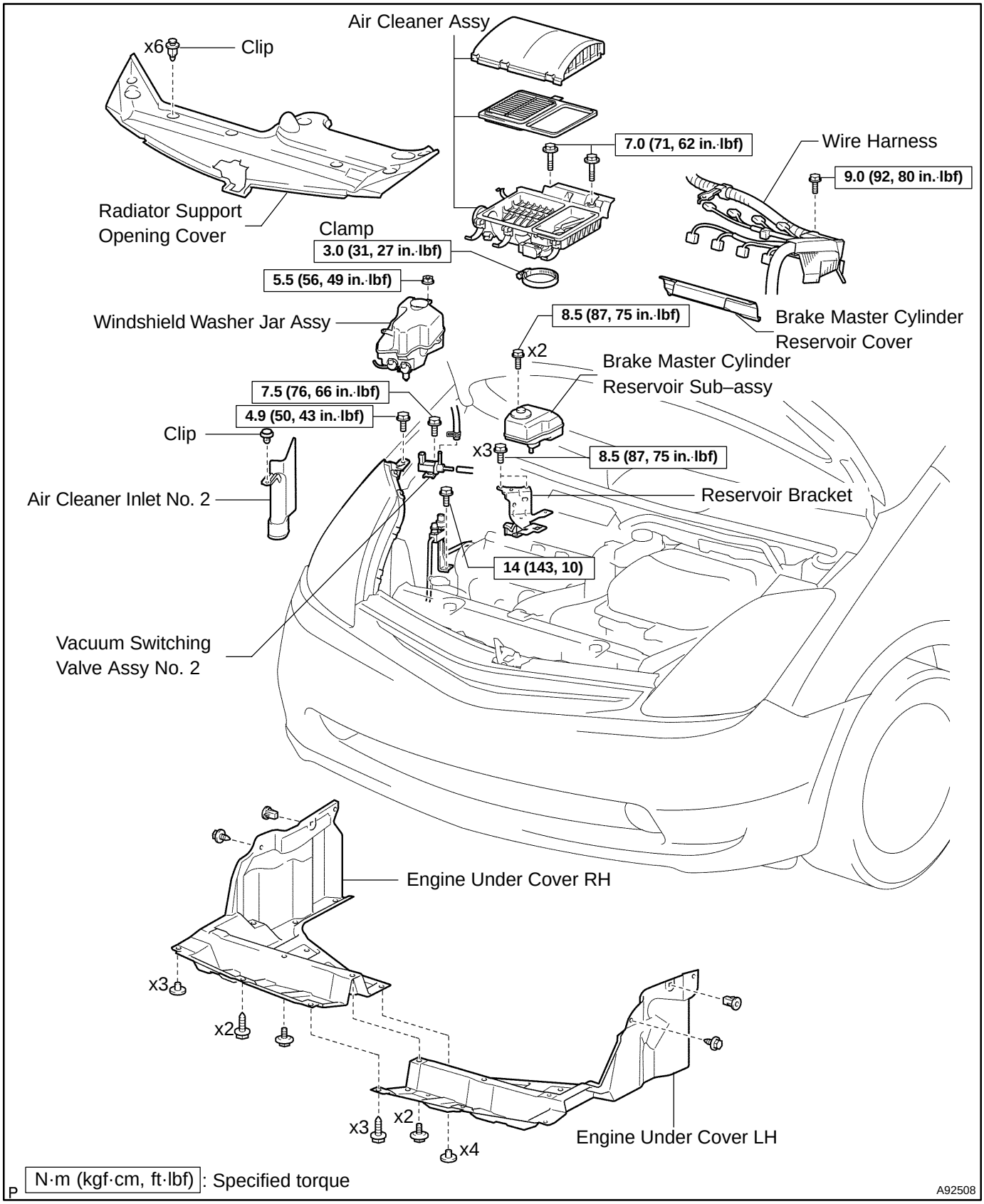

cardiagn.com

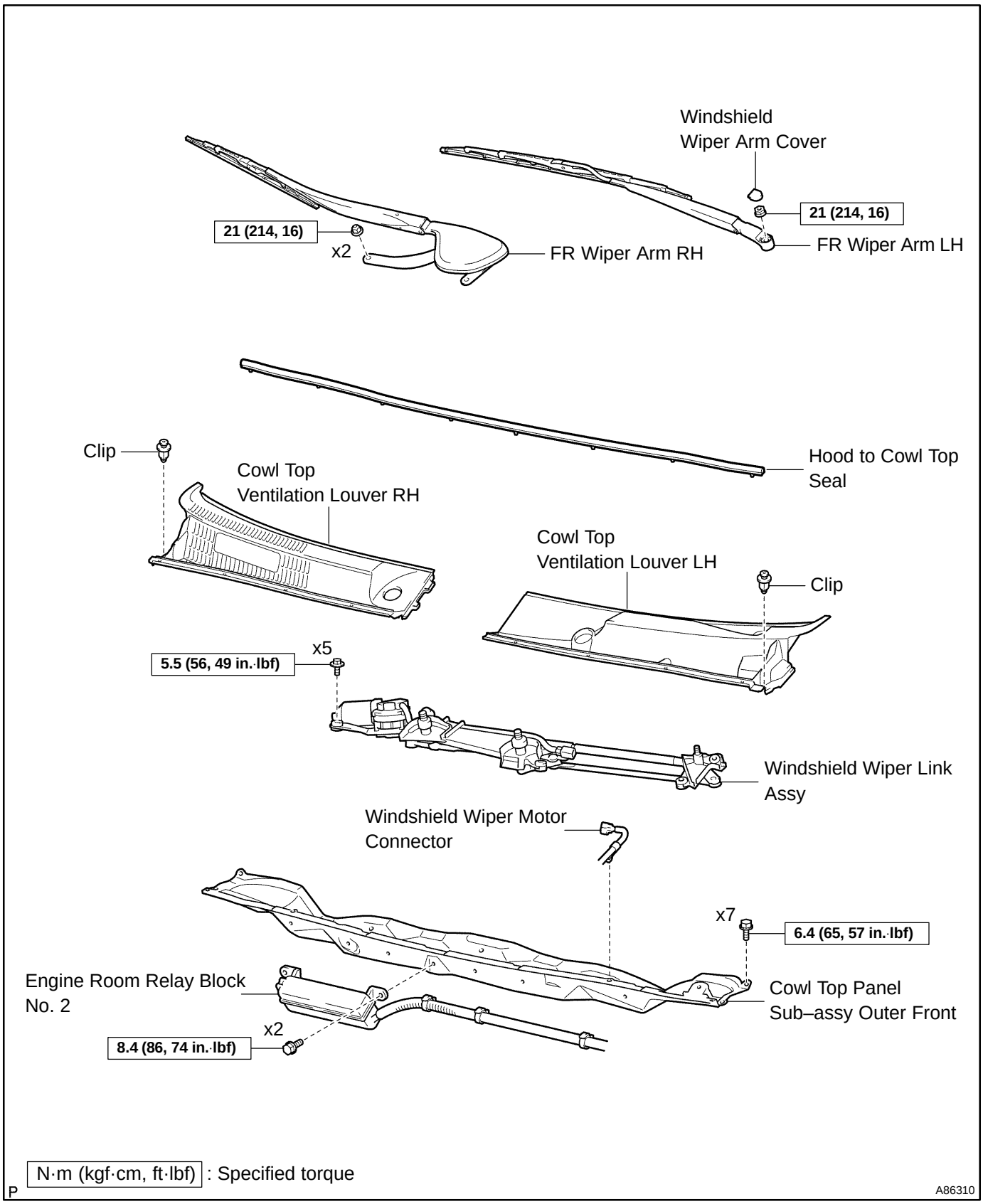

cardiagn.com

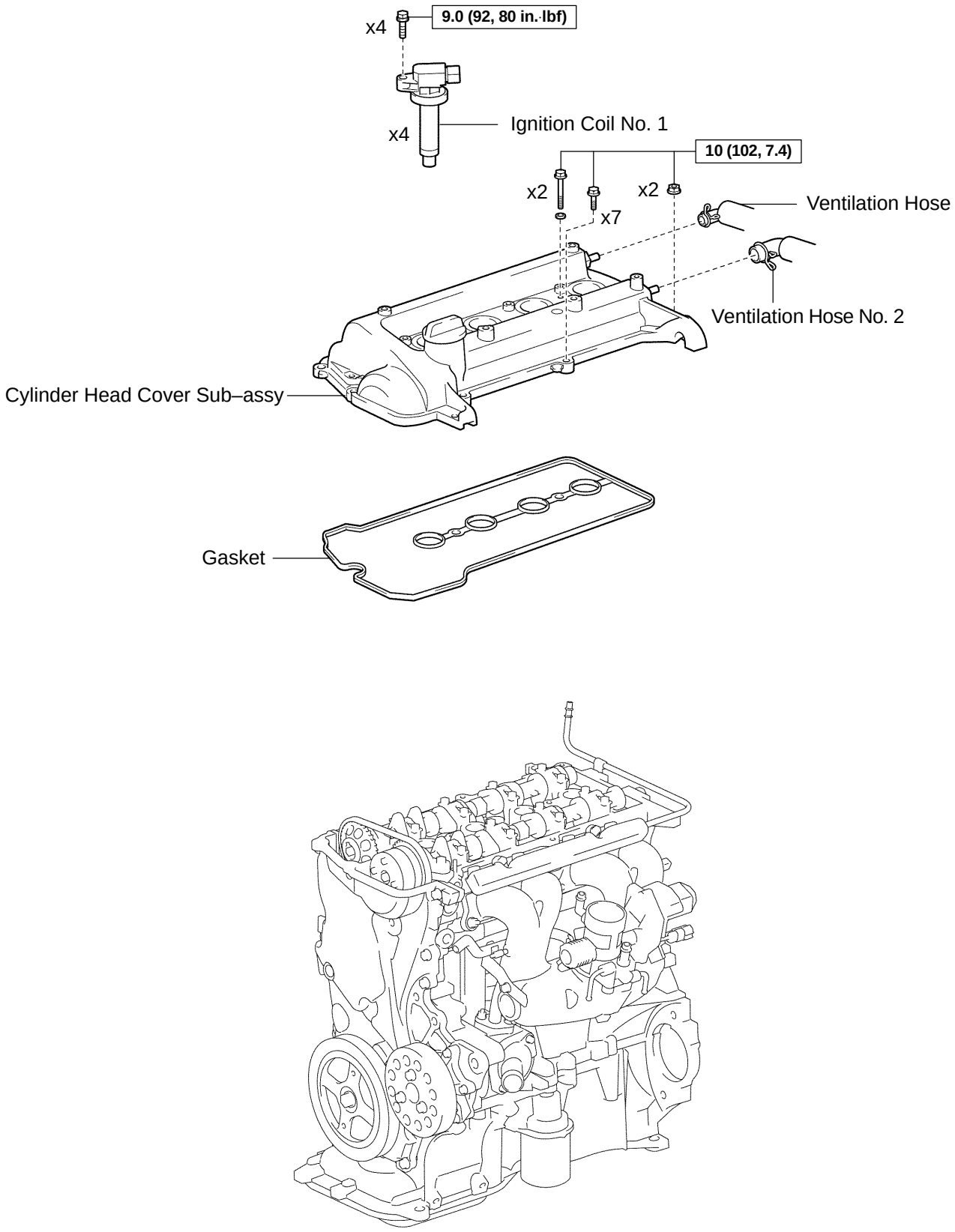

P N·m (kgf·cm, ft·lbf): Specified torque

A92510

cardiagn.com

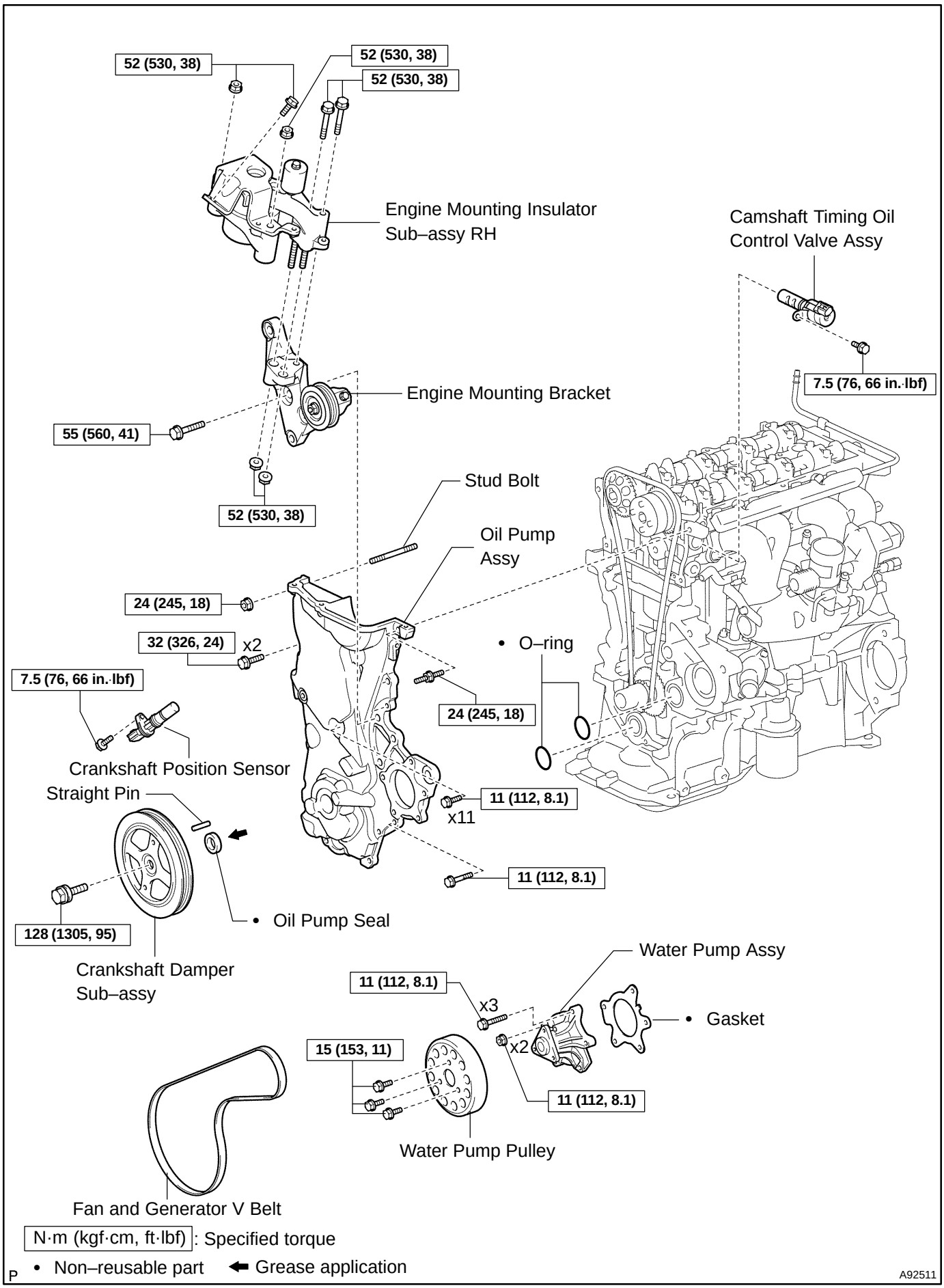

cardiagn.com

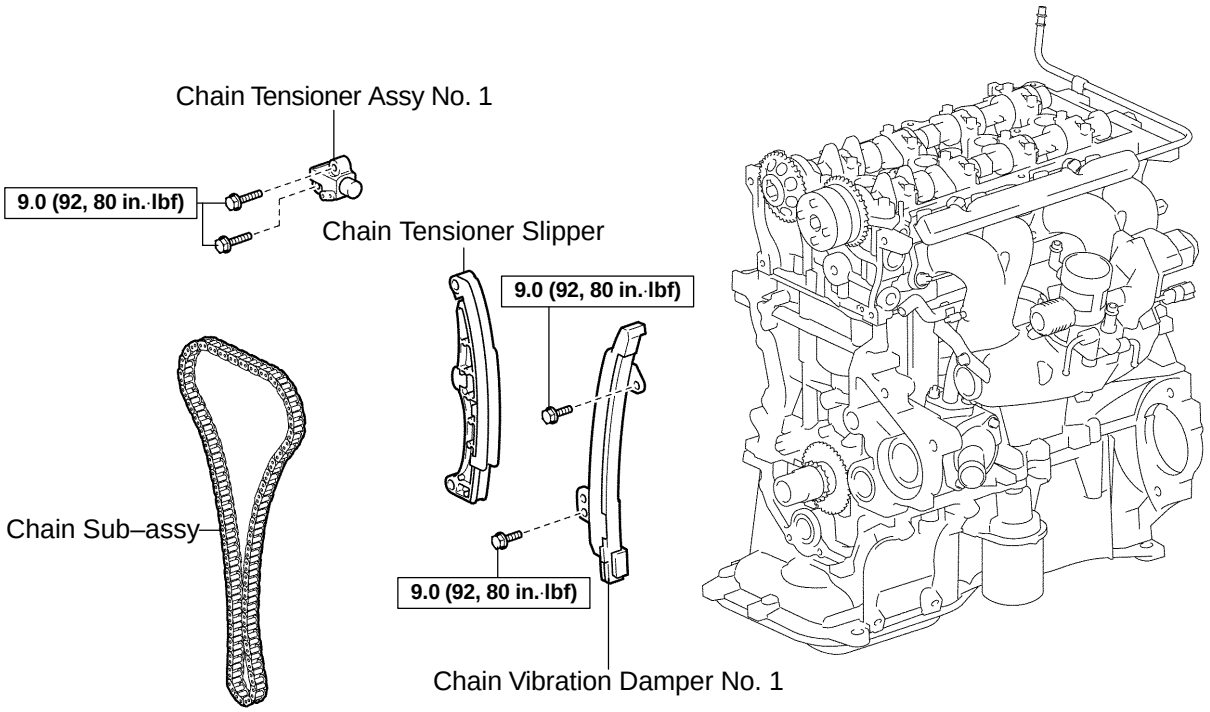

N·m (kgf·cm, ft·lbf) : Specified torque

P

A92985

cardiagn.com

141OQ–01

REPLACEMENT

1. REMOVAL & INSTALLATION OIL PUMP ASSY (See page 17–7)

2. REMOVAL & INSTALLATION OIL PUMP SEAL (See page 17–7)

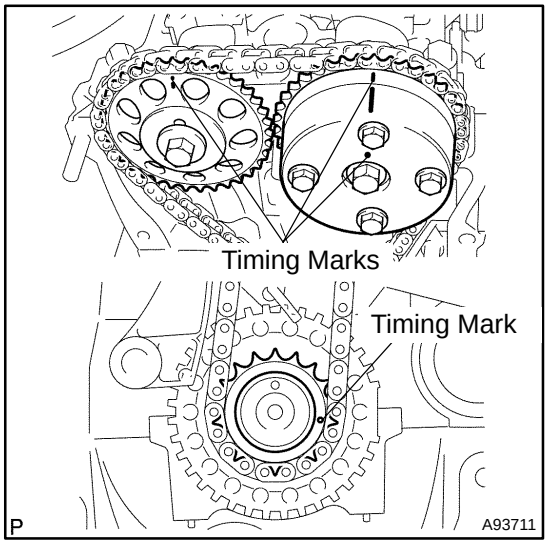

3. SET NO. 1 CYLINDER TO TDC/COMPRESSION

(a) Install the washer to the crankshaft bolt, then install the bolt to the crankshaft.

(b) Turn the crankshaft clockwise so it is located as illustrated.

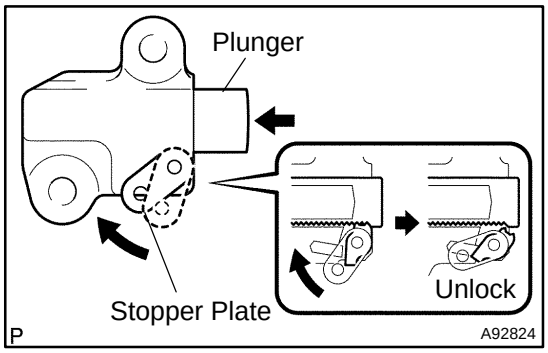

4. REMOVE CHAIN SUB–ASSY

(a) Remove the chain tensioner.

(1) Lift up the stopper plate, then unlock the plunger.

(2) Push in the plunger to the end with the plunger unlocked.

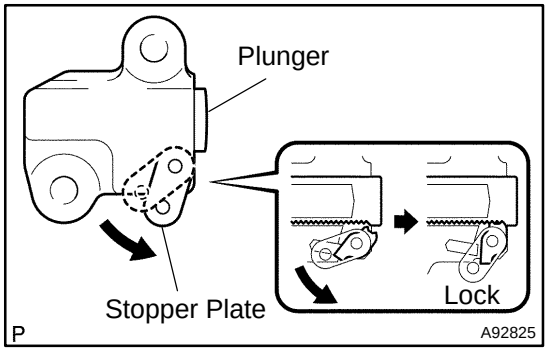

(3) Lift down the stopper plate with the plunger pushed to the end, then lock the plunger.

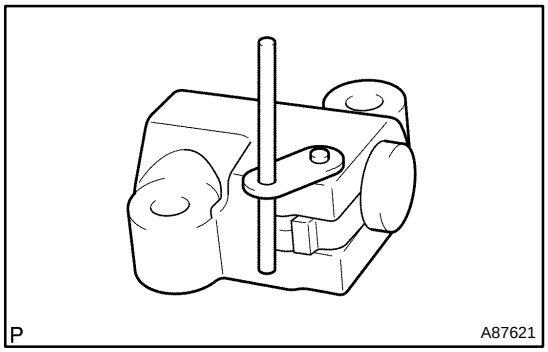

(4) Insert a 3.0 mm (0.118 in.) diameter bar into the hole of the stopper plate with the plunger locked.

HINT:

If the stopper plate is not completely lifted down and a 3.0 mm (0.118 in.) diameter bar cannot be inserted, unlock and pull out the plunger slightly. The stopper plate will be completely lifted down and a 3.0 mm (0.118 in.) diameter bar can be inserted easily.

cardiagn.com

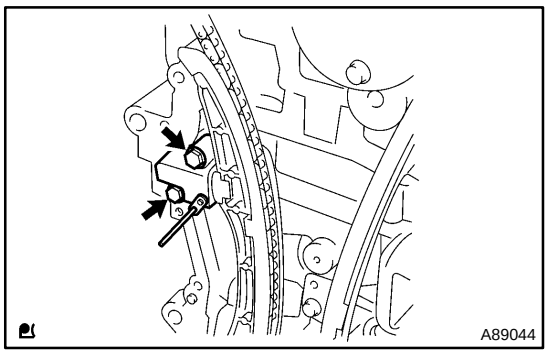

(5) Remove the 2 bolts and chain tensioner.

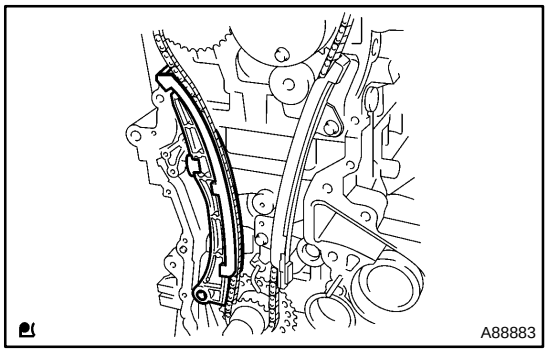

(b) Remove the chain tensioner slipper.

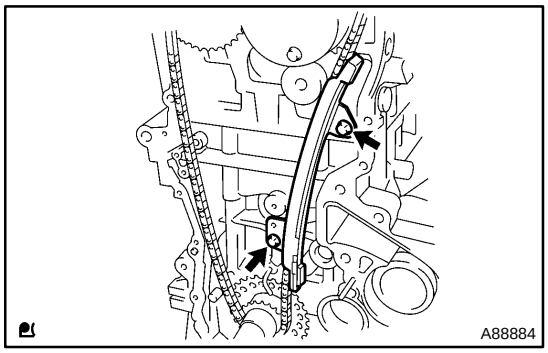

(c) Remove the 2 bolts and chain vibration damper.

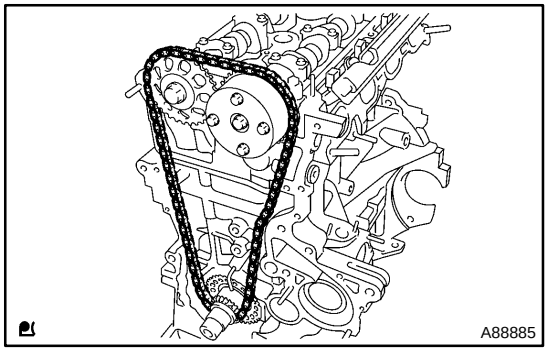

(d) Remove the chain.

cardiagn.com

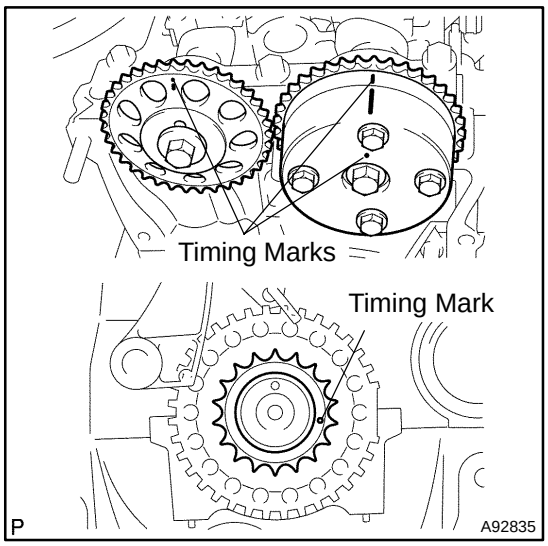

5. INSTALL CHAIN SUB–ASSY

(a) Check that the timing marks are located as illustrated.

NOTICE:

- **Do not turn the crankshaft with the chain tensioner removed.**
- **If turning the camshaft with the chain removed, turn the crankshaft counterclockwise by 40◆ from the TDC/compression.**

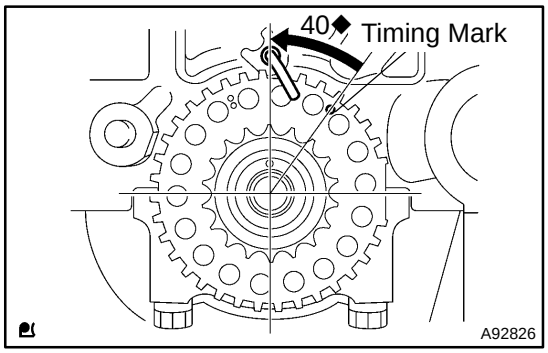

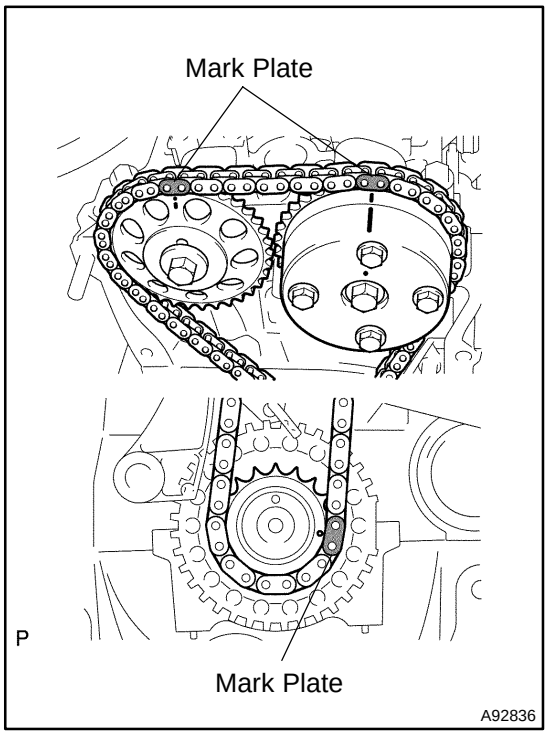

(b) Install the chain so the timing mark and the mark plate of the chain are aligned.

HINT:

- The camshaft side Orange
- The crankshaft side Yellow

cardiagn.com

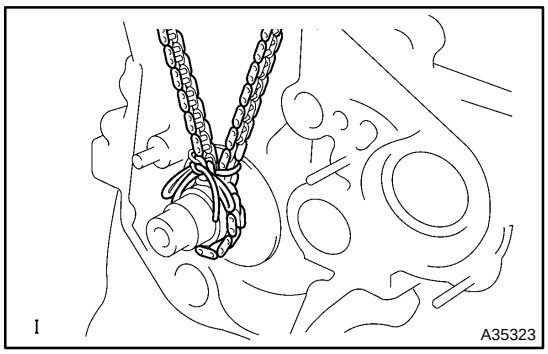

(c) To prevent misalignment of the mark plate and timing mark, tie the chain around the crankshaft timing sprocket with a string.

HINT:

Tie the chain to prevent misalignment of the timing marks.

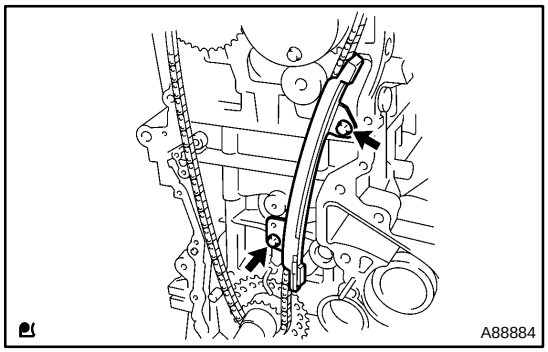

(d) Install the chain vibration damper with the 2 bolts.
Torque: 9.0 N·m (92 kgf·cm, 80 in.·lbf)

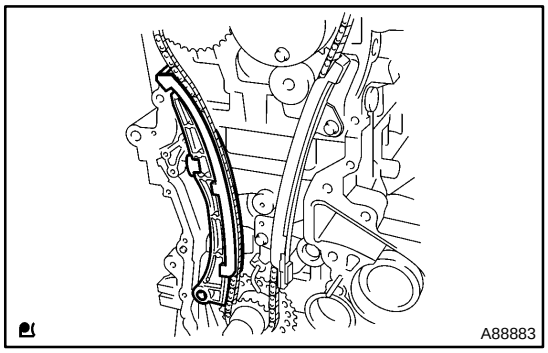

(e) Remove the string, then install the chain tensioner stopper.

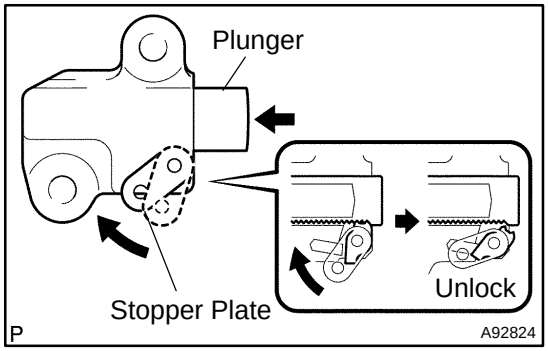

(f) Install the chain tensioner.
(1) Lift up the stopper plate, then unlock the plunger.
(2) Push in the plunger to the end with the plunger unlocked.

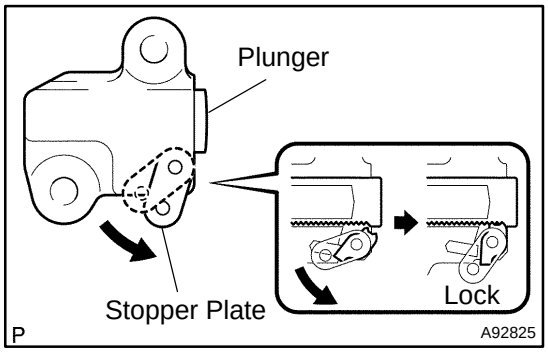

(3) Lift down the stopper plate with the plunger pushed to the end, then lock the plunger.

cardiagn.com

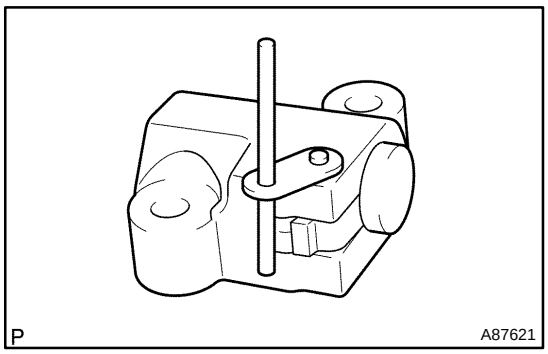

(4) Insert a 3.0 (0.118 in.) mm diameter bar into the hole of the stopper plate with the plunger locked.

HINT:
If the stopper plate is not completely lifted down and a 3.0 mm (0.118 in.) diameter bar cannot be inserted, unlock and pull out the plunger slightly. The stopper plate will be completely lifted down and a 3.0 mm (0.118 in.) diameter bar can be inserted easily.

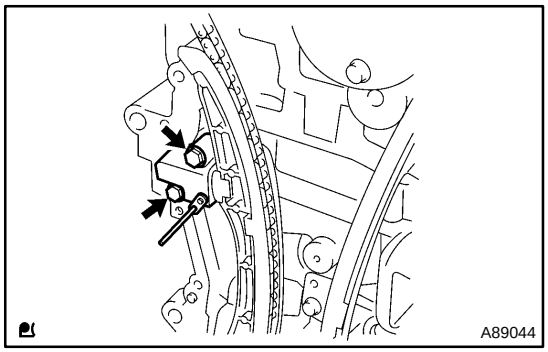

(5) Install the chain tensioner with the 2 bolts.
Torque: 9.0 N·m (92 kgf·cm, 80 in.·lbf)

(6) Remove the 3.0 mm (0.118 in.) diameter bar from the chain tensioner.

6. INSTALL OIL PUMP SEAL (See page 17–7)
SST 09950–60010 (09951–00250, 09951–00380, 09952–06010), 09950–70010 (09951–07100)

7. INSTALL OIL PUMP ASSY (See page 17–7)

cardiagn.com

CAMSHAFT (1NZ–FXE)

COMPONENTS

141OR–01

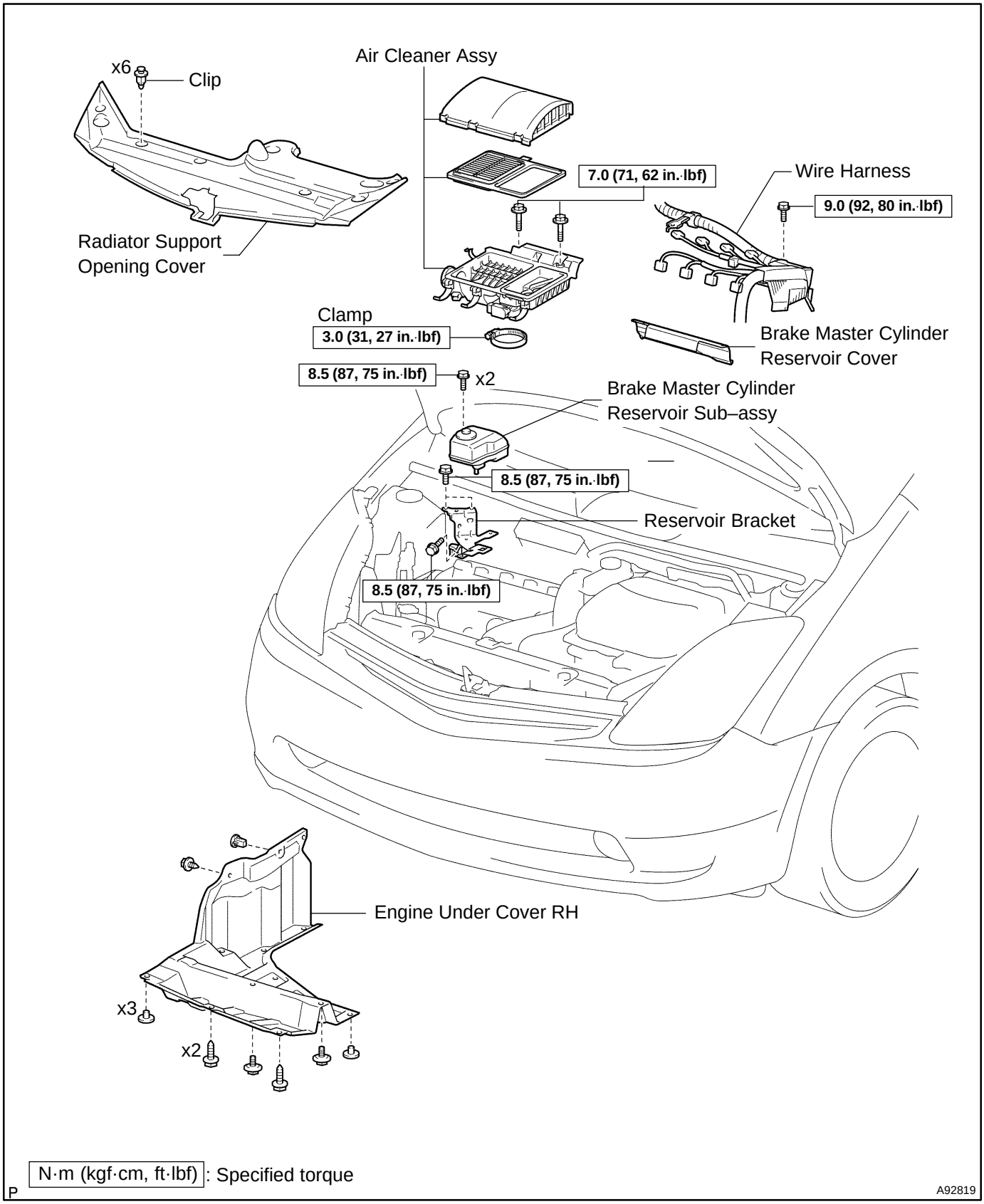

cardiagn.com

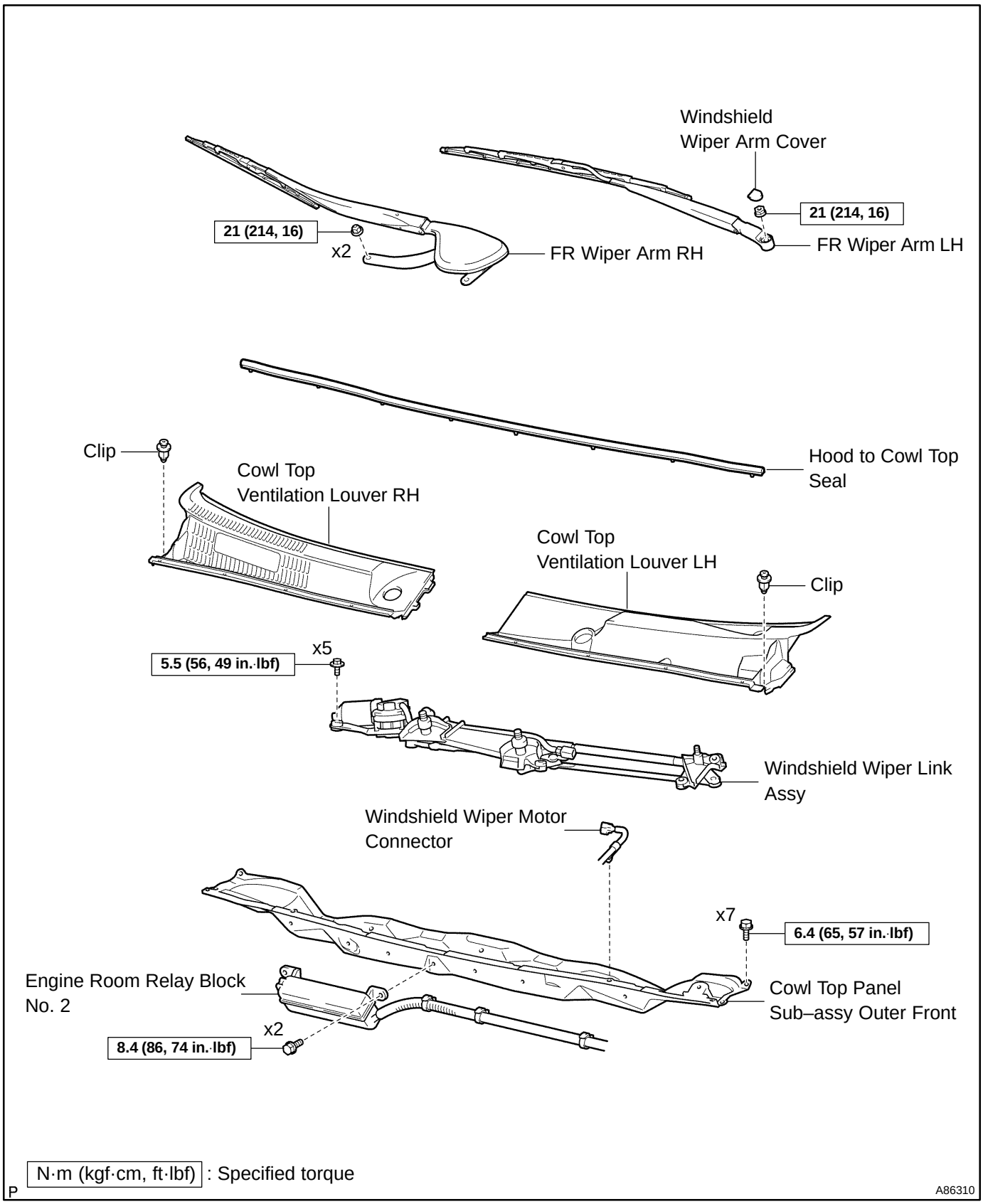

cardiagn.com

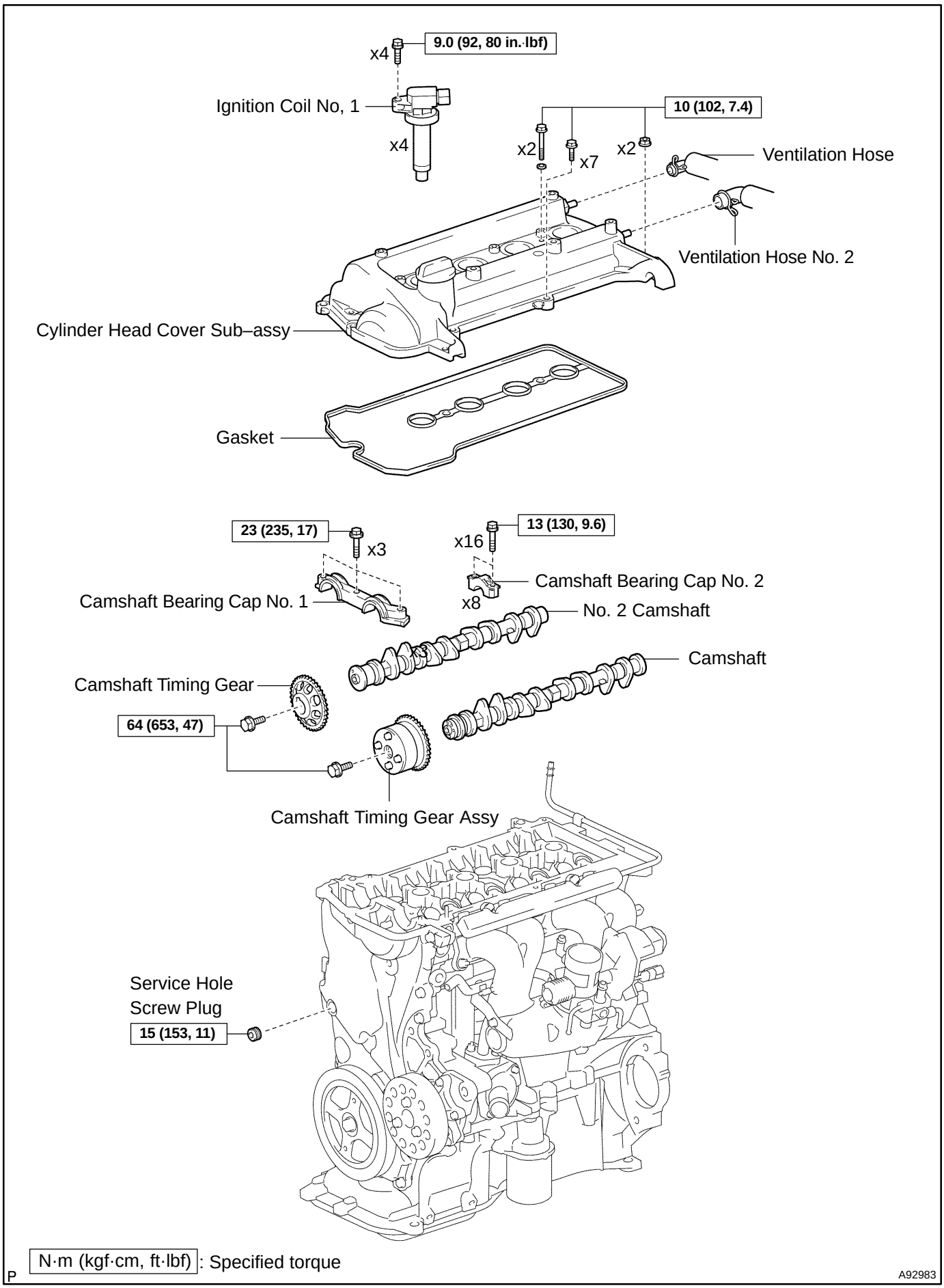

cardiagn.com

REPLACEMENT

1. **REMOVE REAR FLOOR BOARD NO.2 (See page 21–116)**
2. **REMOVE DECK FLOOR BOX REAR (See page 21–116)**
3. **REMOVE REAR FLOOR BOARD NO.3 (See page 21–116)**
4. **DISCONNECT BATTERY NEGATIVE TERMINAL (See page 21–116)**
5. **REMOVE ENGINE UNDER COVER RH**
6. **REMOVE WINDSHIELD WIPER LINK ASSY (See page 66–14)**
7. **REMOVE COWL TOP PANEL SUB–ASSY OUTER FRONT (See page 11–15)**
8. **REMOVE RADIATOR SUPPORT OPENING COVER (See page 16–11)**
9. **REMOVE AIR CLEANER ASSY (See page 17–7)**
10. **SUSPEND BRAKE MASTER CYLINDER RESERVOIR SUB–ASSY (See page 17–7)**
11. **REMOVE RESERVOIR BRACKET (See page 17–7)**
12. **REMOVE CYLINDER HEAD COVER SUB–ASSY (See page 17–7)**

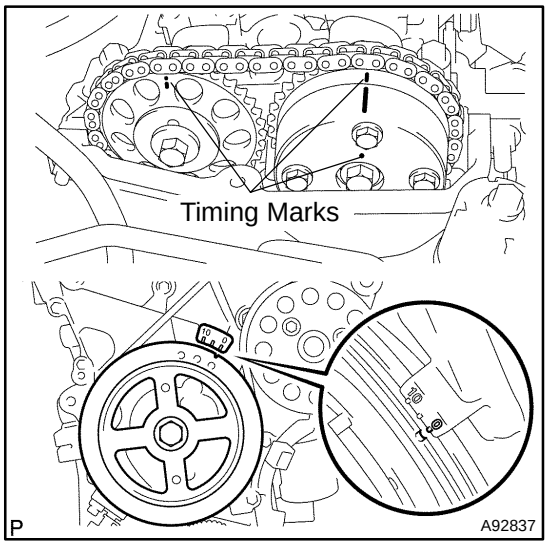

13. REMOVE NO.2 CAMSHAFT

(a) Set the No. 1 cylinder to the TDC/compression.

(1) Turn the crankshaft damper clockwise, then align its timing mark notch with the timing mark ”0”.

(2) Check that the timing marks of the camshaft timing gear are located as illustrated.

HINT:

If not, turn the crankshaft to align the marks.

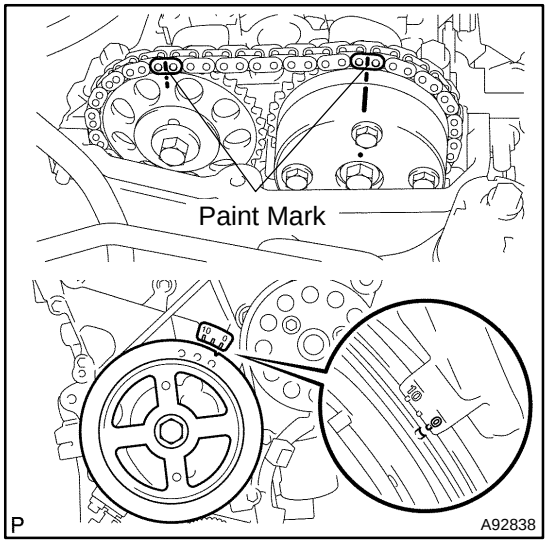

(3) Put the paint marks on the timing chain plates which align with timing marks of the camshaft timing gear.

cardiagn.com

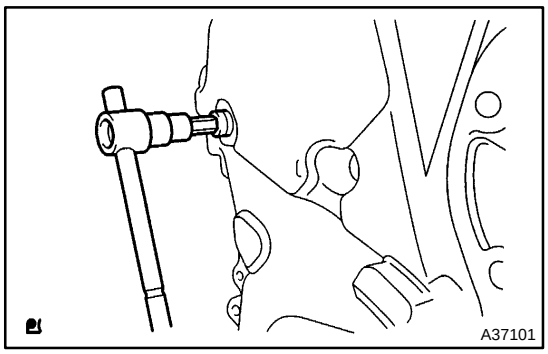

(b) Using 8 mm socket hexagon wrench, remove the service hole screw plug.
SST 09023–38400

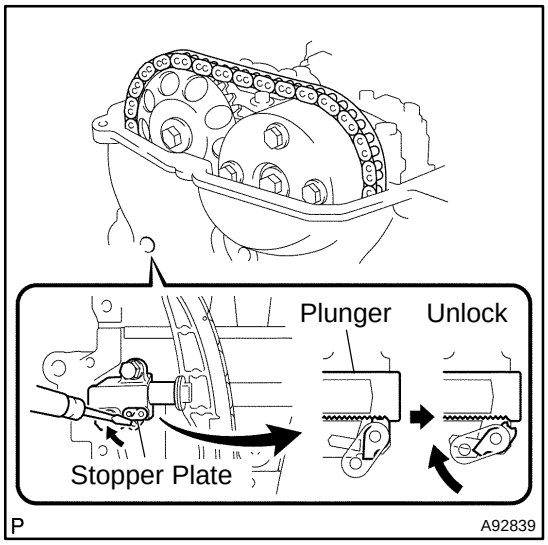

(c) Insert a screwdriver into the service hole of the chain tensioner to hold the stopper plate of the chain tensioner upward.

HINT:
Lifting up the stopper plate of the chain tensioner unlocks the plunger.

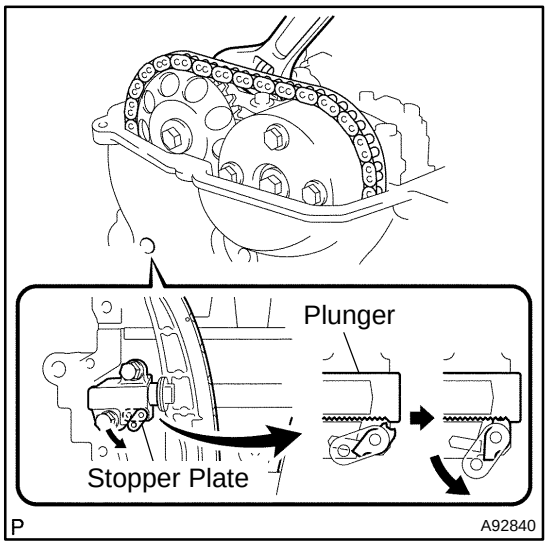

(d) Keeping the stopper plate of the chain tensioner lifted, slightly rotate the hexagonal lobe of the camshaft No. 2 to the right t with an adjustable wrench so the plunger of the chain tensioner is pushed.

HINT:
When the camshaft No. 2 is slightly rotated to the right, the plunger is pushed.

cardiagn.com

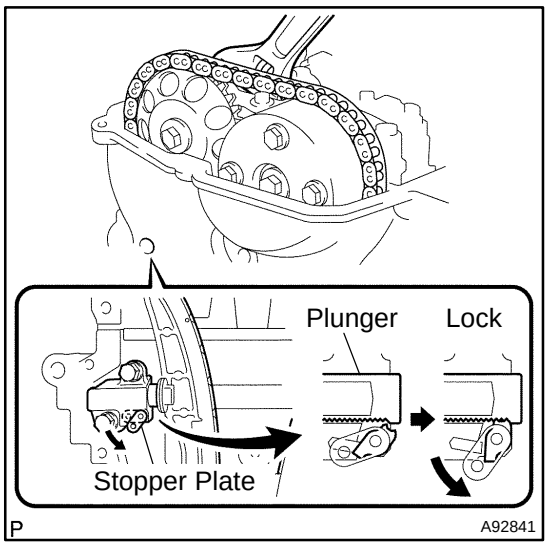

(e) Keeping the adjustable wrench installed, remove the screwdriver with the plunger pushed.

NOTICE:

Do not move the adjustable wrench.

HINT:

Removing the screwdriver lifts down the stopper plate and locks the plunger.

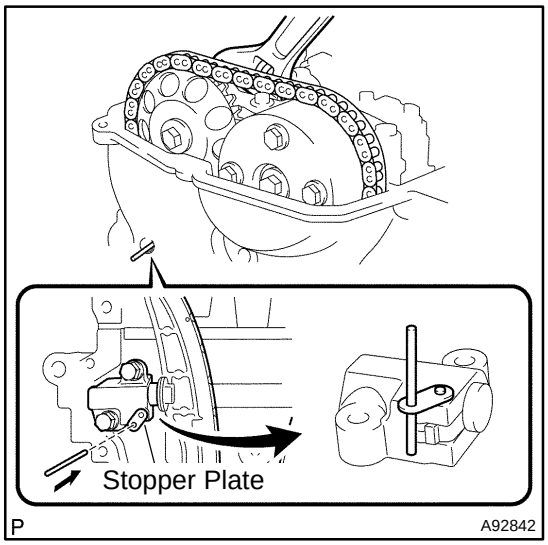

(f) Insert a 3.0 mm (0.118 in.) diameter bar into the hole of the stopper plate with the stopper plate of the chain tensioner lifted down and locked.

HINT:

If a 3.0 mm (0.118 in.) diameter bar cannot be inserted into the hole of the stopper plate, rotate the camshaft No. 2 slightly to the left and right. Then a 3.0 mm (0.118 in.) diameter bar can be inserted easily.

(g) Secure the 3.0 mm (0.118 in.) diameter bar with tape.

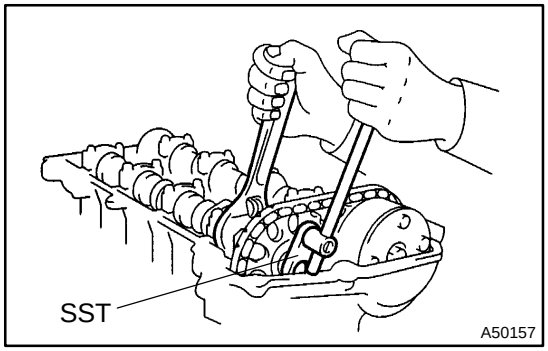

(h) Hold the hexagonal lobe of the camshaft No. 2 with the adjustable wrench.

(i) Using SST, loosen the bolt.
SST 09023–38400

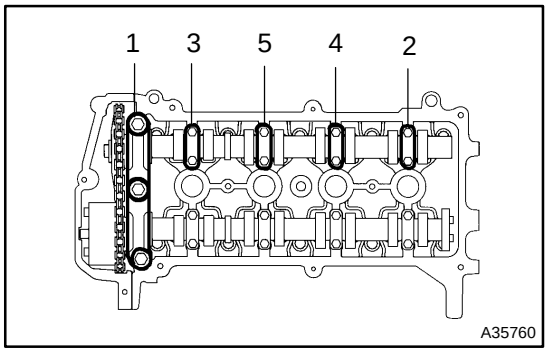

(j) Remove the camshaft bearing caps No. 1 and No. 2 in the sequence shown in the illustration.

NOTICE:

Uniformly loosen the bolts keeping the camshaft No. 2 level.

cardiagn.com

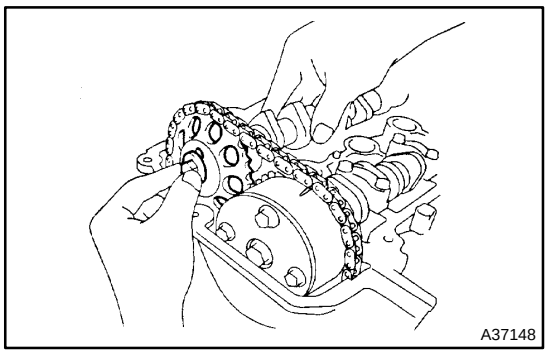

(k) Remove the bolt when the camshaft No. 2 is lifted slightly, then remove the camshaft No. 2 and camshaft timing gear.

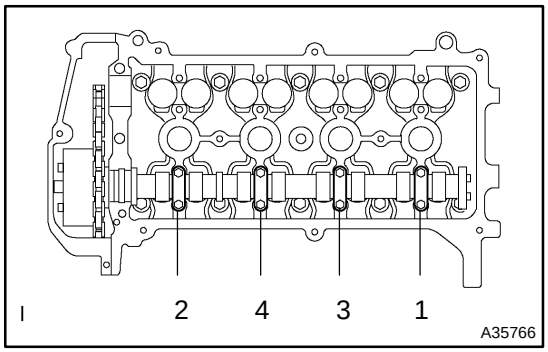

14. REMOVE CAMSHAFT

(a) Remove the camshaft bearing caps No. 2 in the sequence shown in the illustration.

NOTICE:

Uniformly loosen the bolts keeping the camshaft level.

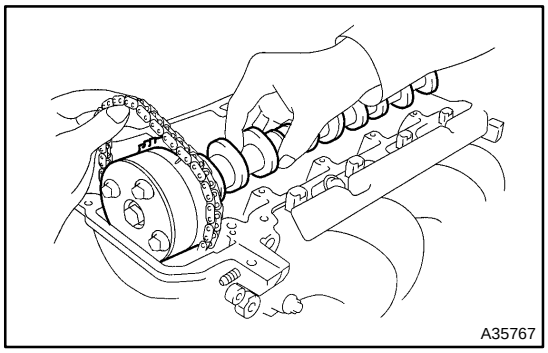

(b) Hold the timing chain by hand, then remove the camshaft.

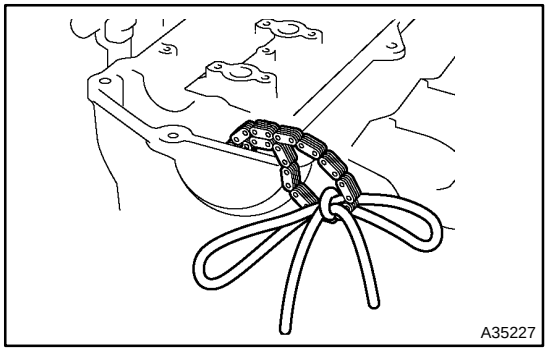

(c) Tie the timing chain with a string or wire.

NOTICE:

Prevent foreign objects from getting into the engine compartment with a shop rag.

cardiagn.com

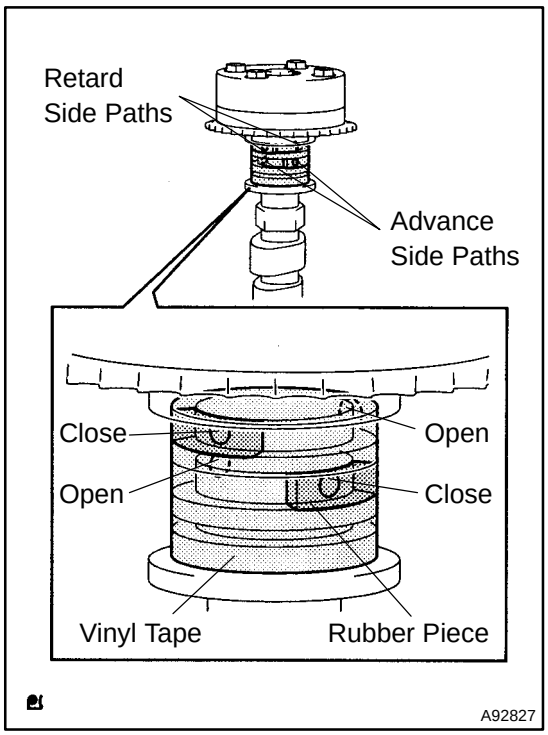

15. REMOVE CAMSHAFT TIMING GEAR ASSY

(a) Clamp the camshaft in a vise, then check that the camshaft timing gear assembly does not rotate.

NOTICE:

Do not damage the camshaft by clamping it in a vise too tightly.

(b) Cover the 4 oil paths of the cam journal with vinyl tape as shown in the illustration.

HINT:

One of the 2 grooves located on the cam journal is for retarding cam timing (upper) and the other is for advancing cam timing (lower). Each groove has 2 oil paths. Plug one of the 2 oil paths for each groove with rubber pieces before wrapping the cam journal with the tape.

(c) Punctuate the tape which covers the advance side path and retard side path on the opposite side.

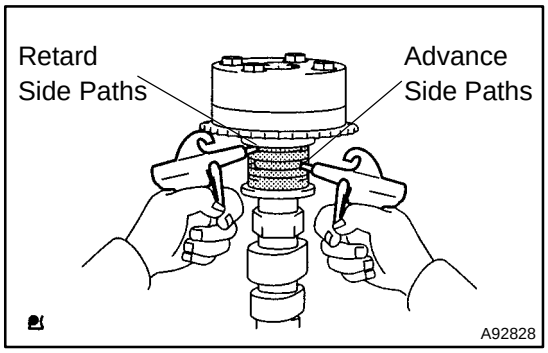

(d) Apply approximately 150 kPa (1.5 kgf/cm^2) of air pressure into the 2 punctuated paths (the advance side path and retard side path).

NOTICE:

When applying air pressure, cover the paths with a shop rag to prevent oil splash.

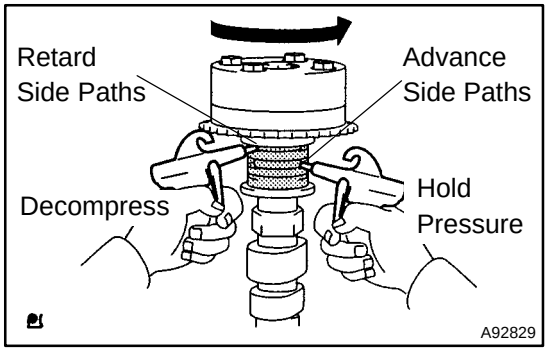

(e) Confirm that the camshaft timing gear assembly revolves in the advance direction when reducing the air pressure of the retard side path.

HINT:

The lock pin is released and the camshaft timing gear revolves in the advance direction.

(f) When the camshaft timing gear assembly reaches the most advanced position, release the air pressure of the retard side path, then release the air pressure of the advance side path.

NOTICE:

If the air pressure of the advance side path is released first, the camshaft timing gear assembly occasionally shifts in the retard direction abruptly, which may damage the lock pin. Be sure to release the air pressure of the retard side path first.

cardiagn.com

(g) Remove the bolt and camshaft timing gear assembly.

NOTICE:

- **Do not remove the 4 other bolts.**
- **If reusing the camshaft timing gear assembly, unlock the lock pin inside the camshaft timing gear first.**

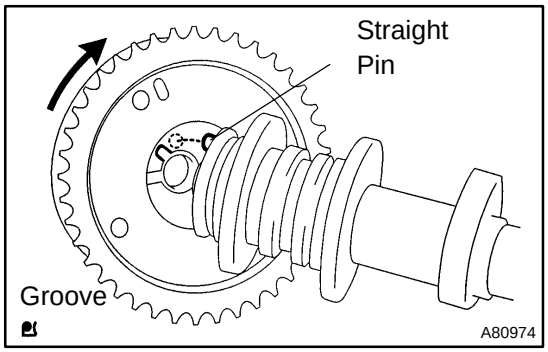

16. INSTALL CAMSHAFT TIMING GEAR ASSY

(a) Put the camshaft timing gear assembly and camshaft together with the straight pin off the groove as illustrated.

(b) Turn the camshaft timing gear assembly in the direction shown (to the left) while pushing it lightly into the camshaft. Push further at the position where the pin fits into the groove.

NOTICE:

Do not turn the camshaft timing gear to the retard direction (to the right).

(c) Check that there is no clearance between the camshaft timing gear assembly and fringe.

(d) Tighten the bolt with the camshaft timing gear fixed.
Torque: 64 N·m (653 kgf·cm, 47 ft·lbf)

NOTICE:

- **Do not damage the camshaft by clamping it in a vise too tightly.**
- **Do not lock the camshaft timing gear assembly when tightening the bolt.**
- **If the camshaft timing gear is locked at the most retarded position, unlock the lock pin inside the timing gear, then tighten the bolts.**

(e) Check that the camshaft timing gear moves to the retard direction (to the right) and it is locked at the most retarded position.

17. INSTALL CAMSHAFT

(a) Apply engine oil to the cam and cylinder head journal.

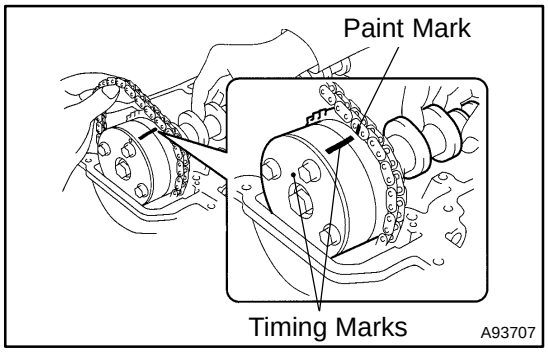

(b) Hold the chain as illustrated, then install the camshaft and camshaft timing gear assembly so that the paint mark of the chain and the timing mark of the camshaft timing gear assembly are aligned.

cardiagn.com

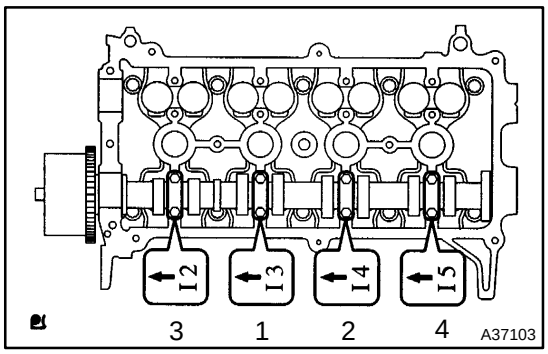

(c) Check the front marks and numbers on the bearing cap No. 2, then tighten the bolts uniformly in several steps in the sequence shown in the illustration.
Torque: 13 N·m (130 kgf·cm, 9.6 ft·lbf)

NOTICE:
Tighten the bolts uniformly keeping the camshaft level.

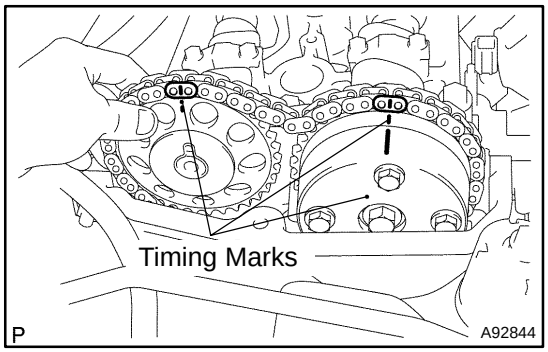

18. INSTALL NO.2 CAMSHAFT

(a) Hold the chain as illustrated, then install the camshaft No. 2 and camshaft timing gear so that the pain mark of the chain and the timing mark of the camshaft timing gear are aligned.

(b) Align the knock pin of the camshaft No. 2 with the pin groove of the camshaft timing gear.

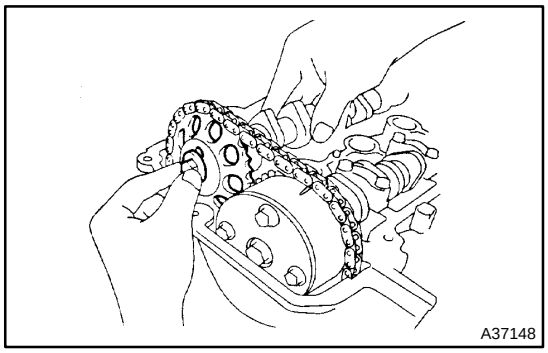

(c) Temporarily tighten the camshaft timing chain with the bolt.

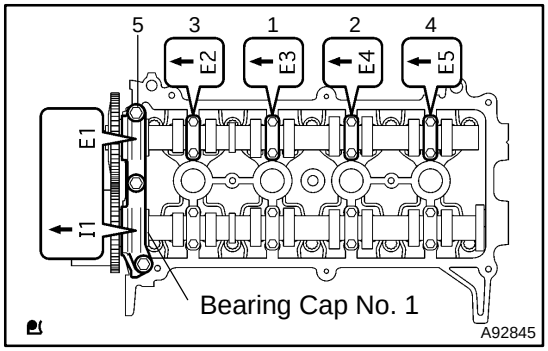

(d) Check the front marks and numbers on the bearing caps No. 1 and No. 2, then tighten the bolts uniformly in several steps in the sequence shown in the illustration.
Torque:
23 N·m (235 kgf·cm, 17 ft·lbf) for bearing cap No. 1
13 N·m (130 kgf·cm, 9.6 ft·lbf) for bearing cap No. 2

NOTICE:
Tighten the bolts uniformly keeping the camshaft level.

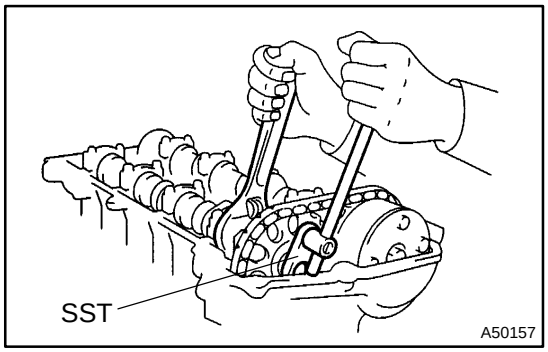

(e) Hold the hexagonal lobe of the camshaft No. 2 with the adjustable wrench.

(f) Using SST, tighten the bolt.
SST 09023–38400
Torque: 64 N·m (653 kgf·cm, 47 ft·lbf)

cardiagn.com

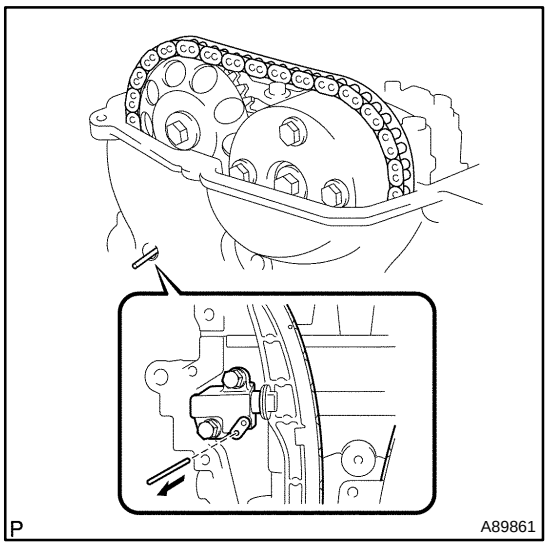

(g) Remove the 3.0 mm (0.118 in.) diameter bar from the chain tensioner.

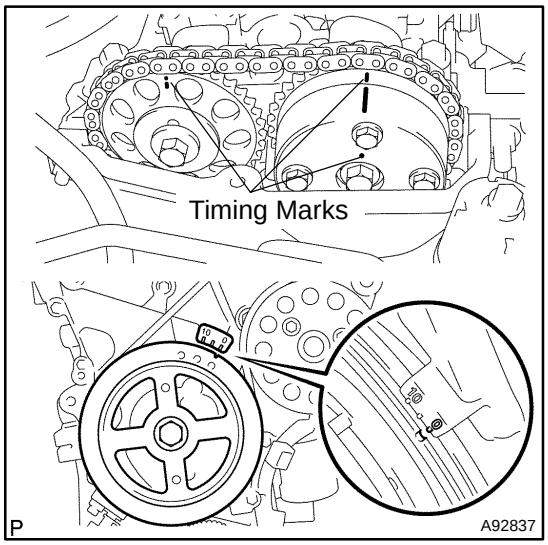

(h) Turn the crankshaft damper clockwise, then align its timing mark notch with the timing mark ”0”.

(i) Check that the timing marks are located as illustrated.

(j) Apply adhesive to the 2 or 3 threads of the service hole screw plug bolt end.
Adhesive:
Part No. 08833–00070, THREE BOND 1324, or equivalent

NOTICE:
Remove any oil from the bolts and bolt holes.

(k) Using an 8 mm socket hexagon wrench, install the service hole screw plug.
Torque: 15 N·m (153 kgf·cm, 11 ft·lbf)

19. INSPECT VALVE CLEARANCE (See page 14–6)

20. ADJUST VALVE CLEARANCE (See page 14–6)
SST 10514, 09023–38400

21. INSTALL CYLINDER HEAD COVER SUB–ASSY (See page 17–7)

22. INSTALL RESERVOIR BRACKET
Torque: 8.5 N·m (87 kgf·cm, 75 in.·lbf)

23. INSTALL BRAKE MASTER CYLINDER RESERVOIR SUB–ASSY
Torque: 8.5 N·m (87 kgf·cm, 75 in.·lbf)

24. INSTALL AIR CLEANER ASSY
Torque:
7.0 N·m (71 kgf·cm, 62 in.·lbf) for Bolt
3.0 N·m (31 kgf·cm, 27 in.·lbf) for Clamp

25. INSTALL COWL TOP PANEL SUB–ASSY OUTER FRONT (See page 11–15)

26. INSTALL WINDSHIELD WIPER LINK ASSY (See page 66–14)

27. CHECK FOR ENGINE OIL LEAKS

28. INSTALL RADIATOR SUPPORT OPENING COVER

29. INSTALL ENGINE UNDER COVER RH

30. CONNECT BATTERY NEGATIVE TERMINAL
Torque: 6.0 N·m (61 kgf·cm, 53 in.·lbf)

cardiagn.com

31. INSTALL REAR FLOOR BOARD NO.3
32. INSTALL DECK FLOOR BOX REAR
33. INSTALL REAR FLOOR BOARD NO.2
34. POWER WINDOW CONTROL SYSTEM INITIALIZE (See page 01–28)

cardiagn.com

CYLINDER HEAD GASKET (1NZ–FXE)

141OT–01

COMPONENTS

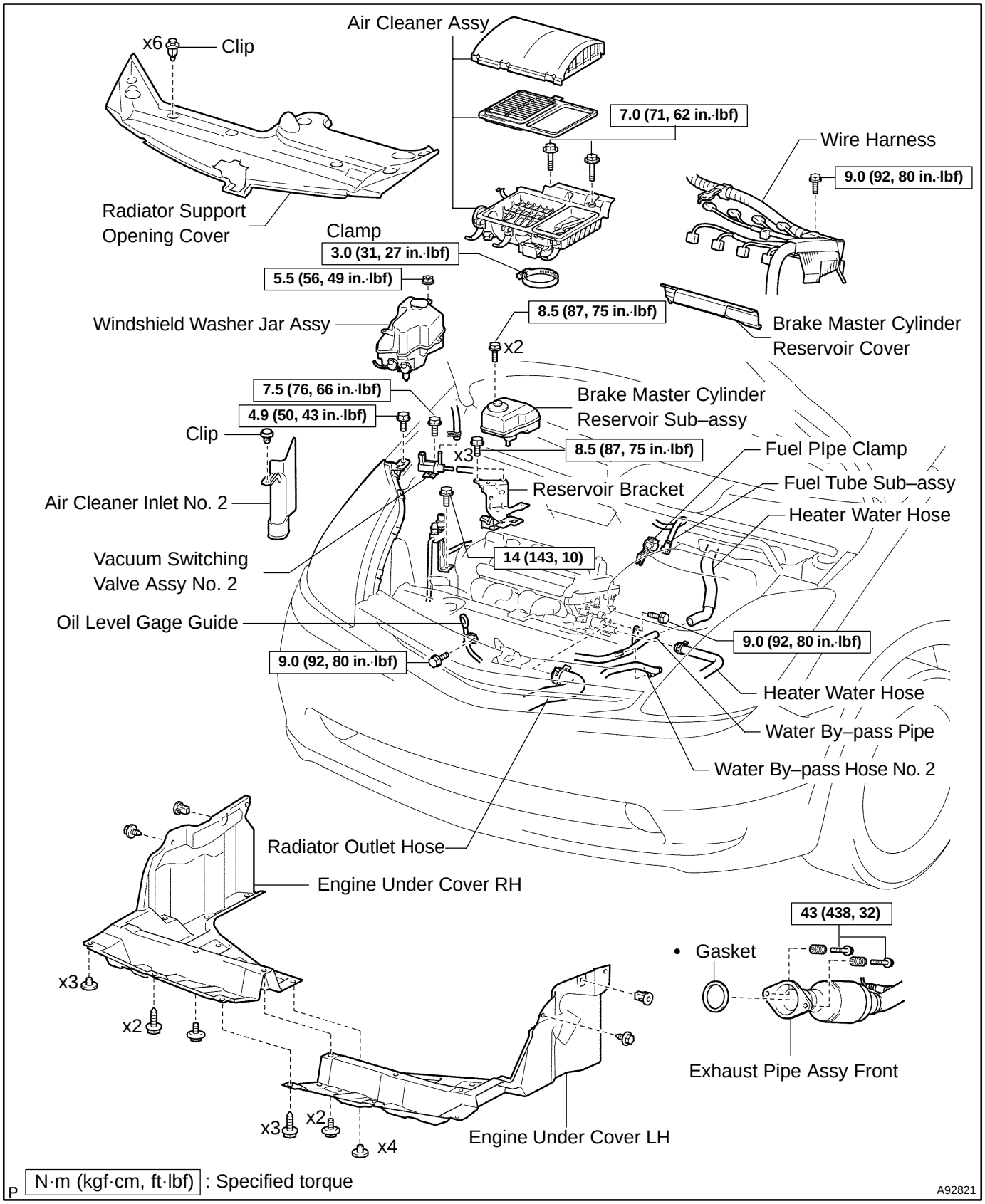

cardiagn.com

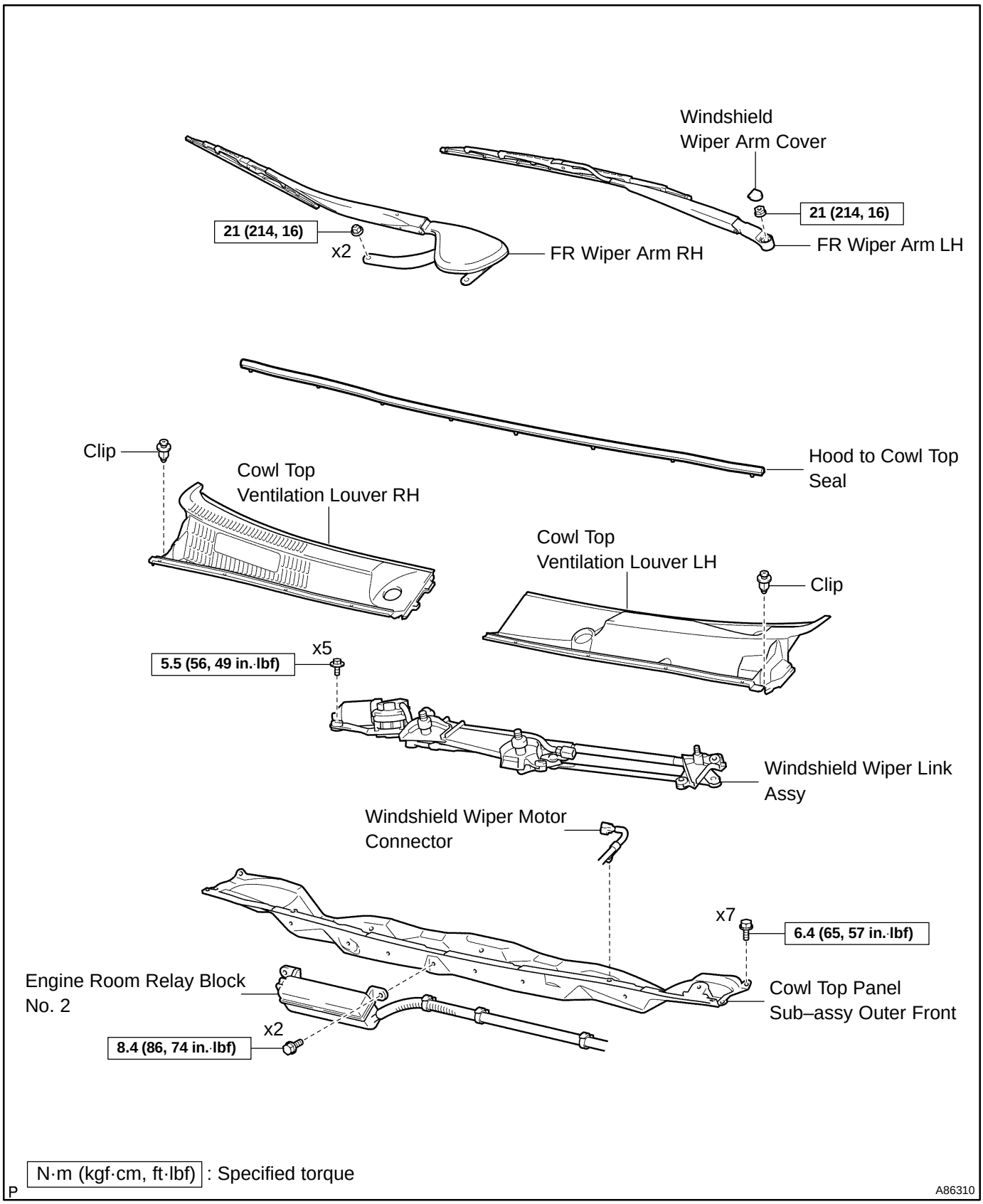

cardiagn.com

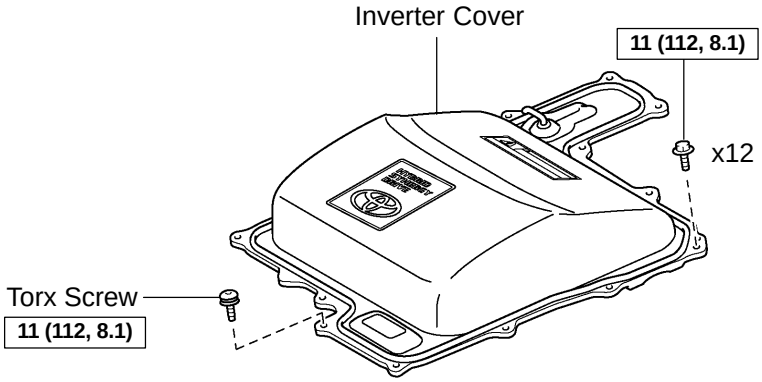

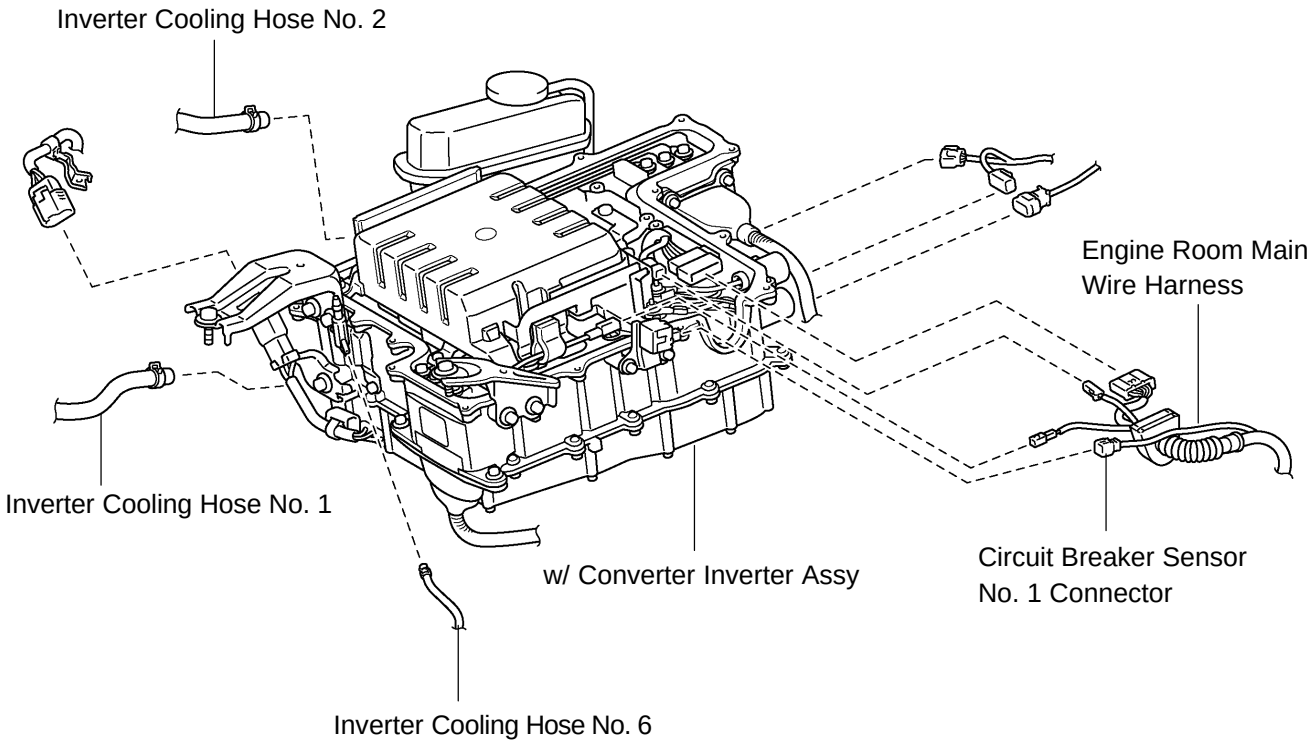

N·m (kgf·cm, ft·lbf): Specified torque

A92987

cardiagn.com

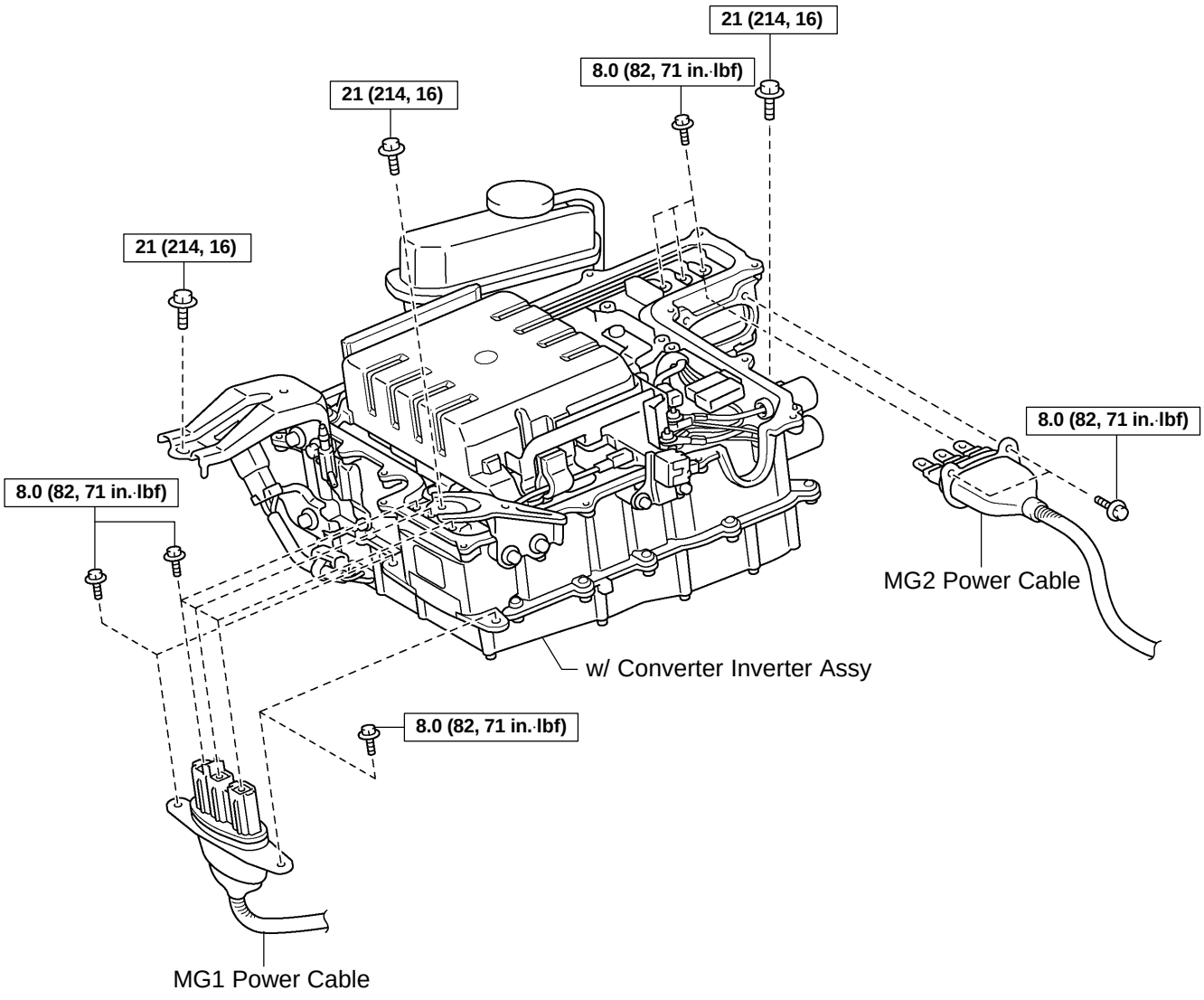

H N·m (kgf·cm, ft·lbf): Specified torque

A83631

cardiagn.com

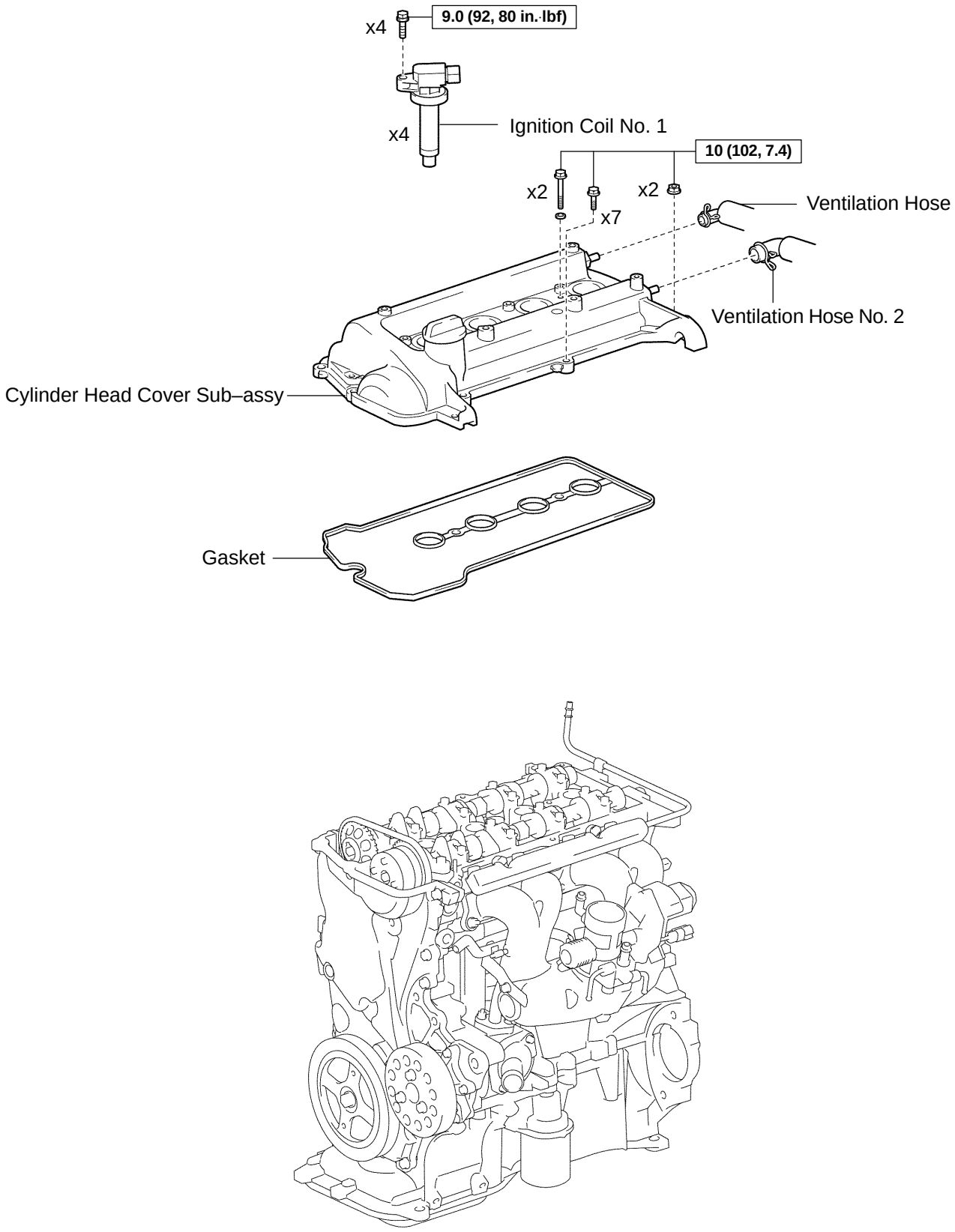

P N·m (kgf·cm, ft·lbf): Specified torque

A92510

cardiagn.com

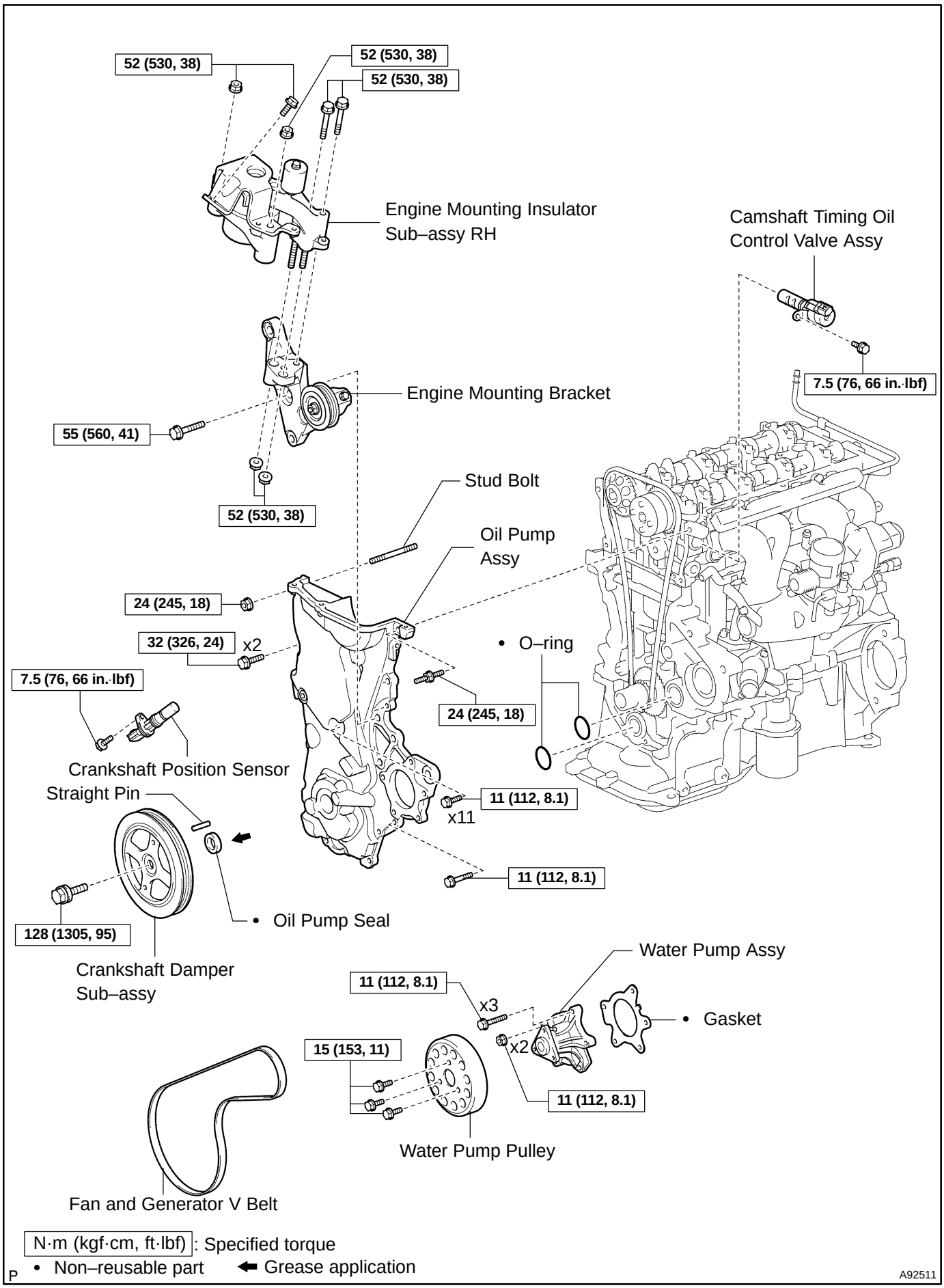

cardiagn.com

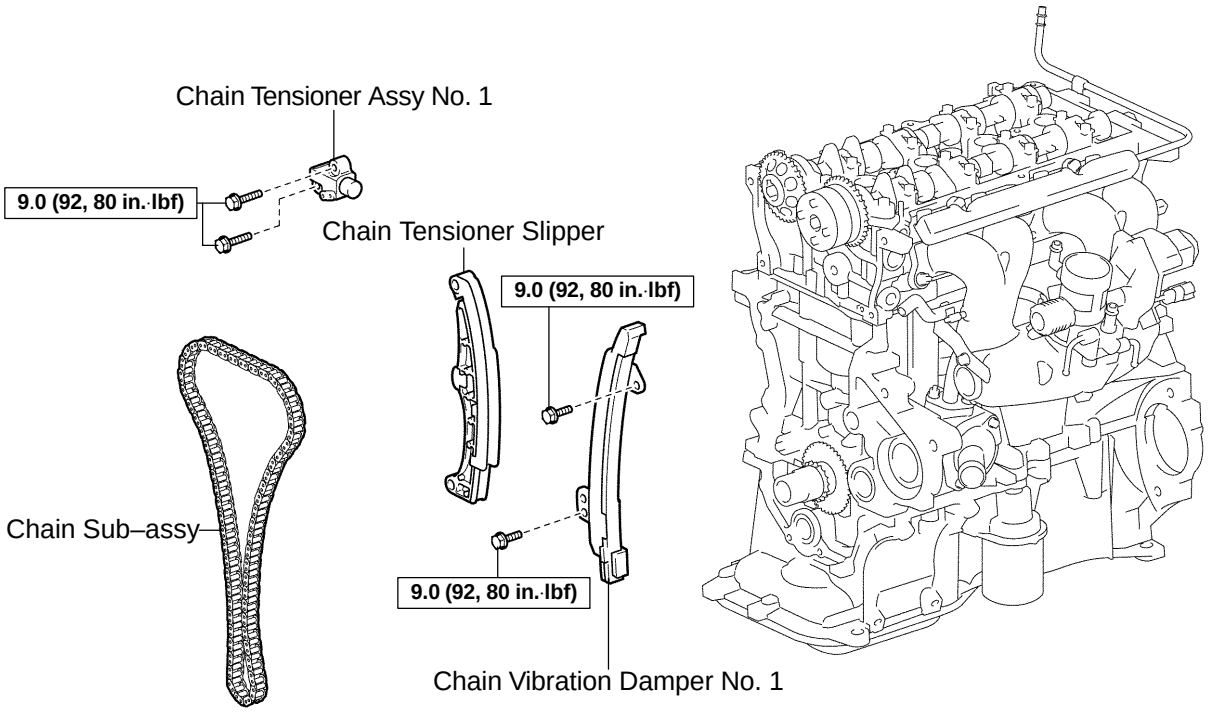

N·m (kgf·cm, ft·lbf) : Specified torque

P

A92985

cardiagn.com

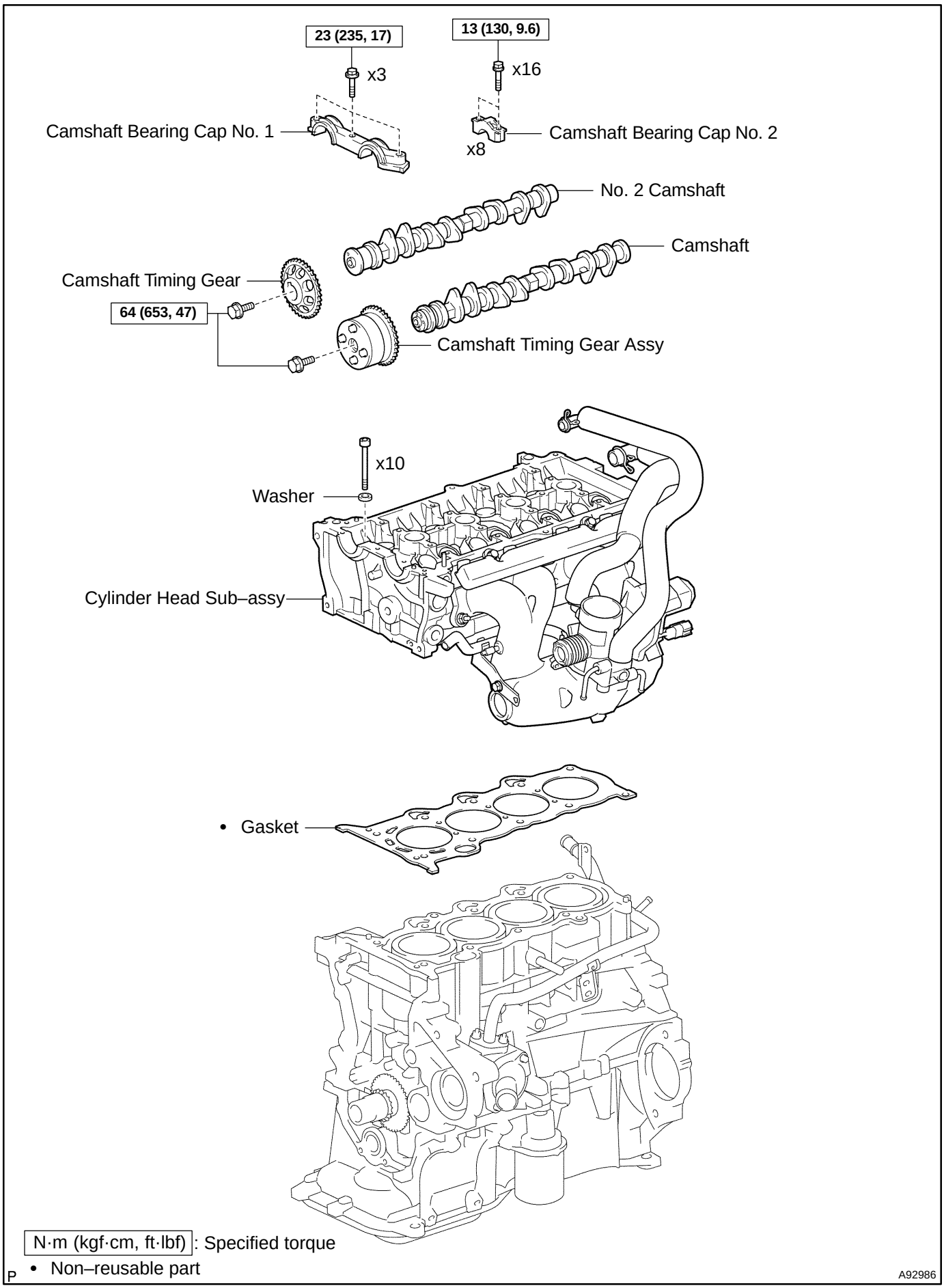

cardiagn.com

141OU–01

REPLACEMENT

1. **DISCHARGE FUEL SYSTEM PRESSURE (See page 11–3)**
2. **PRECAUTION (See page 21–7)**
3. **REMOVE REAR FLOOR BOARD NO.2 (See page 21–116)**
4. **REMOVE DECK FLOOR BOX REAR (See page 21–116)**
5. **REMOVE REAR FLOOR BOARD NO.3 (See page 21–116)**
6. **DISCONNECT BATTERY NEGATIVE TERMINAL (See page 21–116)**
7. **REMOVE SERVICE PLUG GRIP (See page 21–116)**

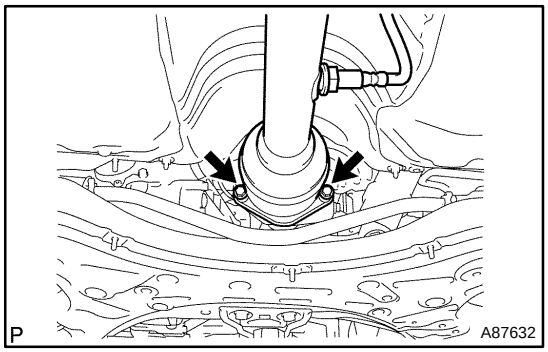

8. **SEPARATE EXHAUST PIPE ASSY FRONT**

(a) Remove the 2 bolts and 2 compression rings, then disconnect the exhaust pipe assembly front from the exhaust manifold.

9. **REMOVE W/CONVERTER INVERTER ASSY (See page 21–23)**
10. **REMOVE CHAIN SUB–ASSY (See page 14–87)**

cardiagn.com

11. REMOVE CYLINDER HEAD SUB–ASSY

(a) Disconnect the connectors and wiring harnesses shown in the illustration.

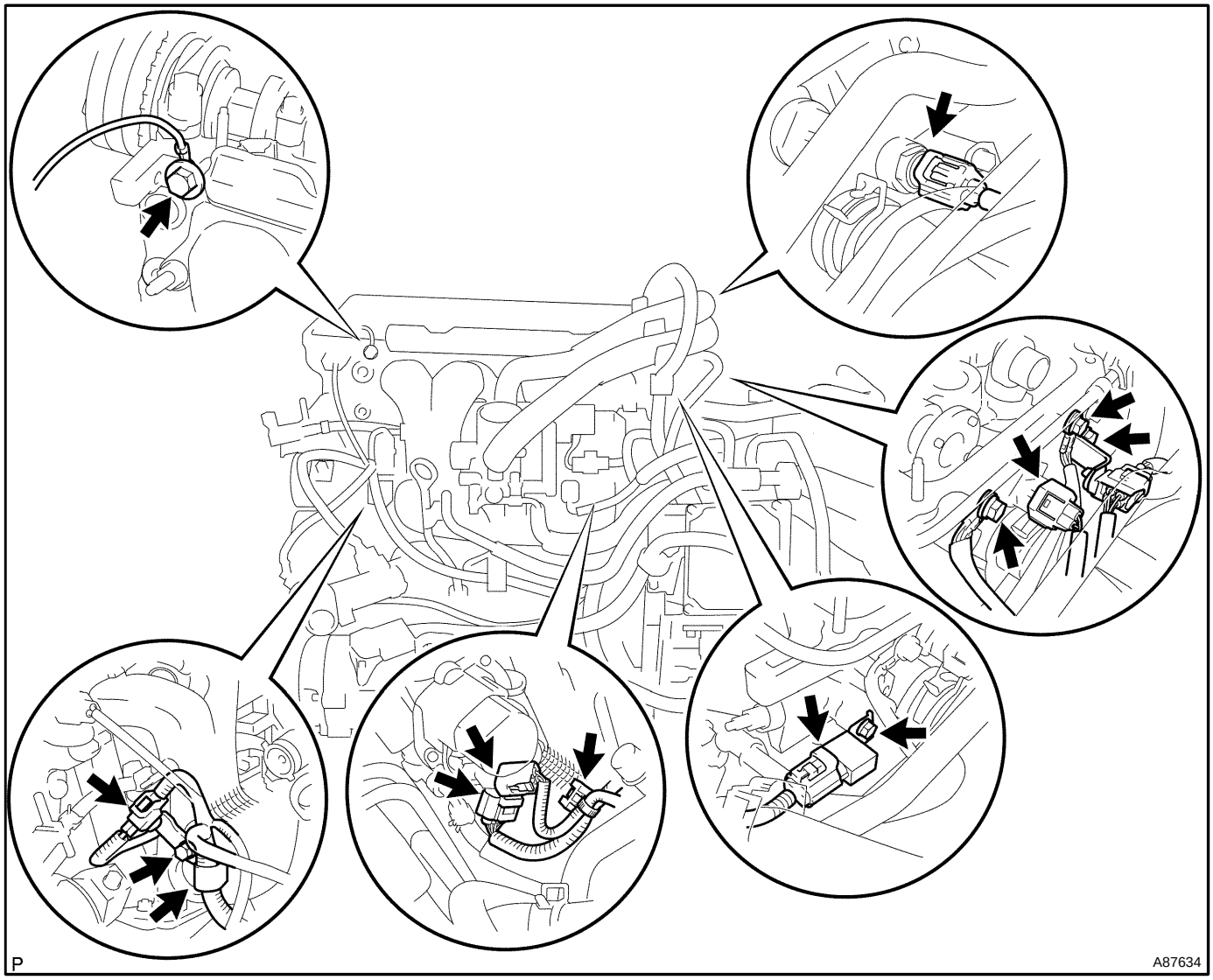

cardiagn.com

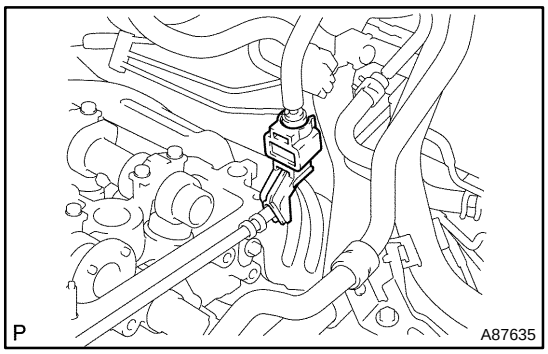

(b) Remove the fuel pipe clamp.

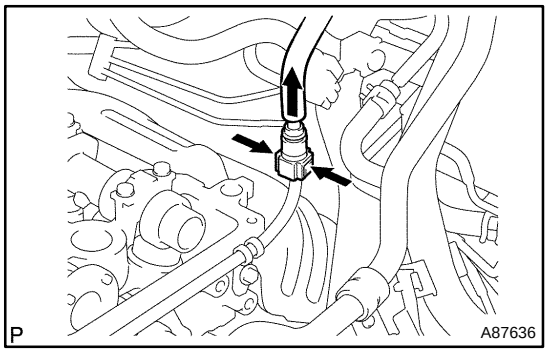

(c) Disconnect the fuel tube from the fuel delivery pipe.

NOTICE:

Even if the fuel tube is stuck and cannot be disconnected, do not use any tools. Push and pull the parts with the quick connecter pinched to disconnect.

(d) Cover the disconnected fuel tube and fuel delivery pipe with a vinyl bag in order to prevent foreign objects from being introduced.

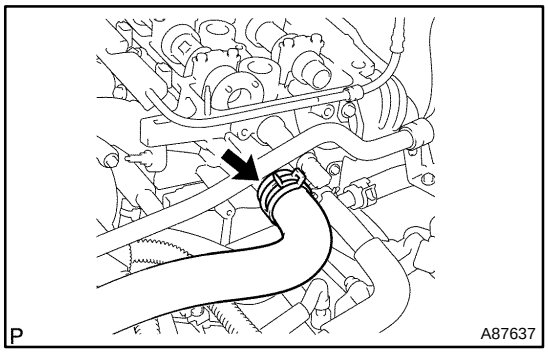

(e) Disconnect the radiator inlet hose.

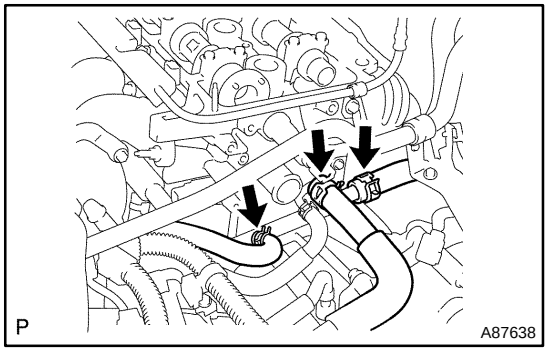

(f) Disconnect the hoses shown in the illustration.

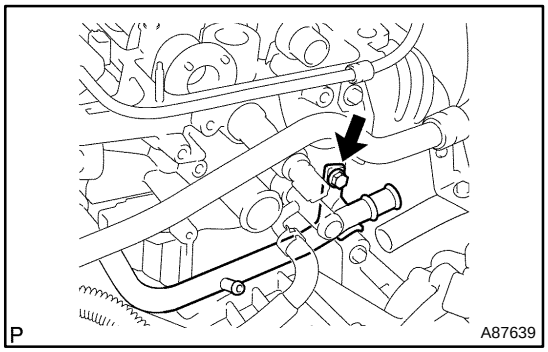

(g) Remove the bolt, then disconnect the water by–pass pipe.

cardiagn.com

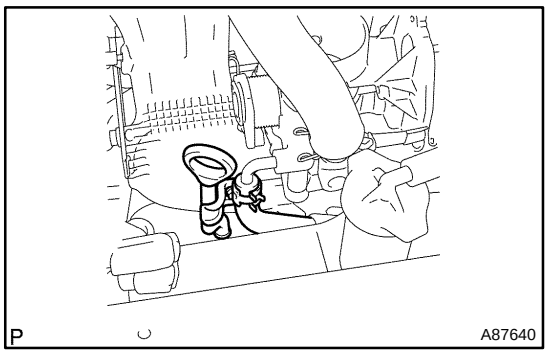

(h) Disconnect the hoses shown in the illustration.

(i) Remove the bolt, then disconnect the oil level gage guide.

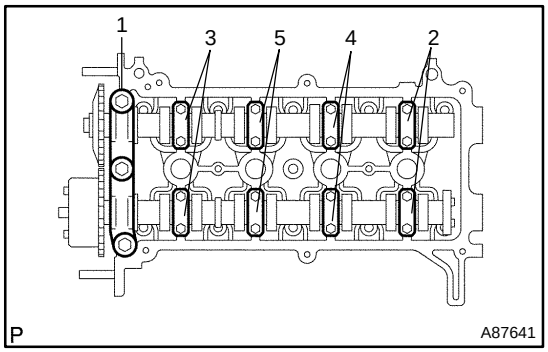

(j) Remove the camshaft bearing caps No. 1 and No. 2 in the sequence shown in the illustration, then remove the camshaft and camshaft No. 2.

NOTICE:

Uniformly loosen the bolts keeping the camshaft level.

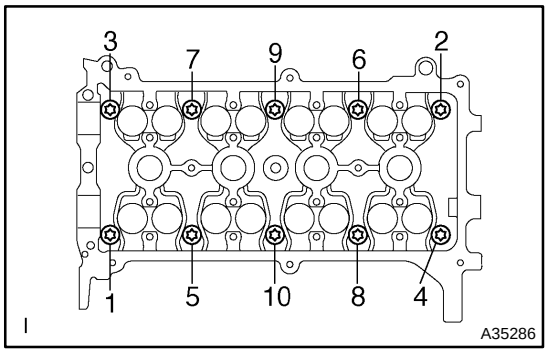

(k) Using 8 mm bi–hexagon wrench, loosen the cylinder head bolt in several steps in the sequence shown in the illustration. Then remove the cylinder head bolt and washer.

NOTICE:

- **when removing the bolt, do not drop the washer into the engine.**
- **Removing the cylinder head bolts in a wrong order may cause damage to the cylinder head.**

(l) Remove the cylinder head.

12. REMOVE CYLINDER HEAD GASKET

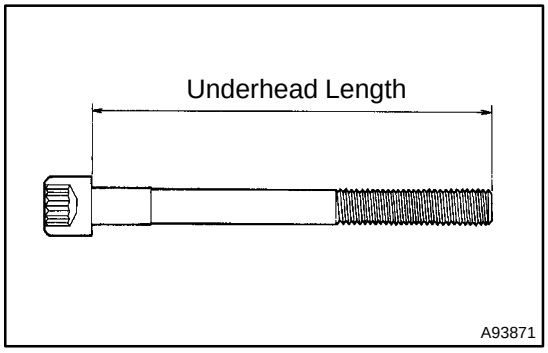

13. INSPECT CYLINDER HEAD SET BOLT

(a) Using vernier calipers, measure the underhead length of the head bolt from the seating to the end.

Standard bolt length:
142.8 to 144.2 mm (5.622 to 5.677 in.)
Maximum bolt length: 147.1 mm (5.791 in.)

If the underhead length is greater than maximum, replace the head bolt.

cardiagn.com

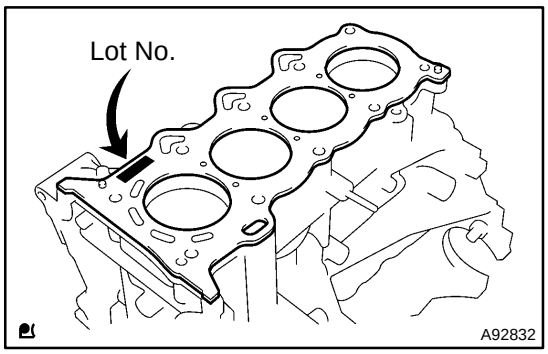

14. INSTALL CYLINDER HEAD GASKET

(a) Place a new head gasket on the cylinder block with the Lot No. facing upward.

NOTICE:

- **Remove any oil from the contact surface.**
- **Be careful of the installation direction.**
- **Do not damage the cylinder head gasket when installing.**

15. INSTALL CYLINDER HEAD SUB–ASSY

HINT:

The cylinder head bolts are tightened in 2 successive steps.

(a) Install the cylinder head to the cylinder block.

NOTICE:

Do not damage the cylinder head gasket at the bottom of the cylinder head.

(b) Apply a light coat of engine oil to the threads and seating of the cylinder head bolts.

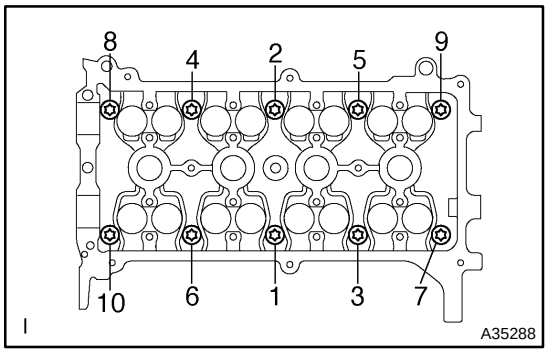

(c) Using several steps, temporarily install the cylinder head bolts with an 8 mm bi–hexagon wrench in the sequence shown in the illustration, then tighten the bolts with the specified torque.

Torque: 29 N·m (296 kgf·cm, 21 ft·lbf)

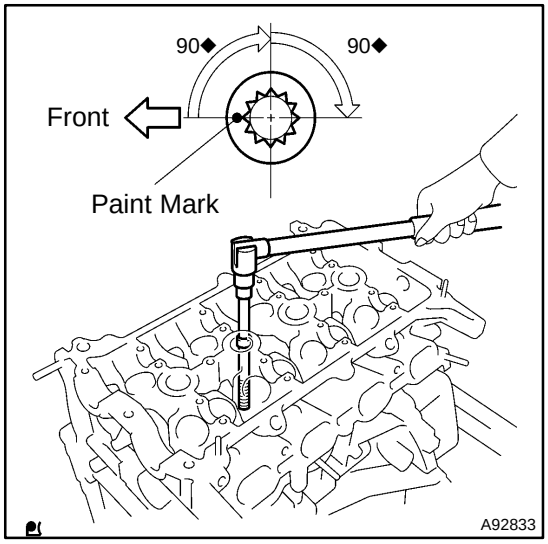

(d) Mark the front of the cylinder head bolts with paint.

(e) Retighten the bolts by additional 90◆in the same sequence as step (c), then retighten them by one more additional 90◆.

(f) Check that each paint mark is now at the 180◆angle to the front.

cardiagn.com

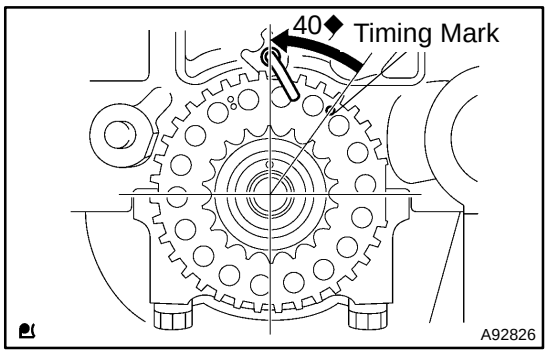

(g) Install the camshaft.

NOTICE:

If turning the camshaft with the chain removed, turn the crankshaft counterclockwise by 40◆ from the TDC/compression.

(1) Apply engine oil to the cam and cylinder head journal.

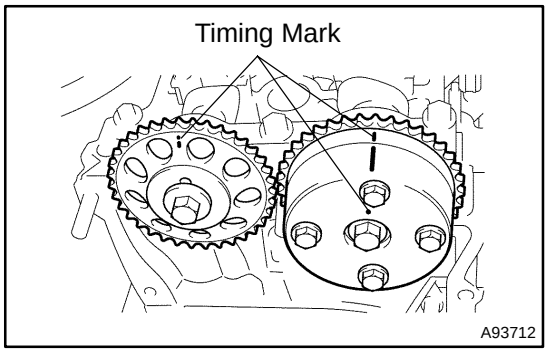

(2) Place the camshaft and camshaft No. 2 on the cylinder head with the timing mark on the camshaft timing gear facing upward.

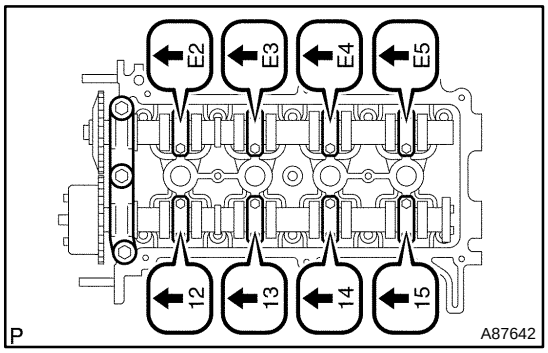

(3) Check the front marks and numbers on the camshaft bearing caps No. 1 and No. 2, then temporarily install them.

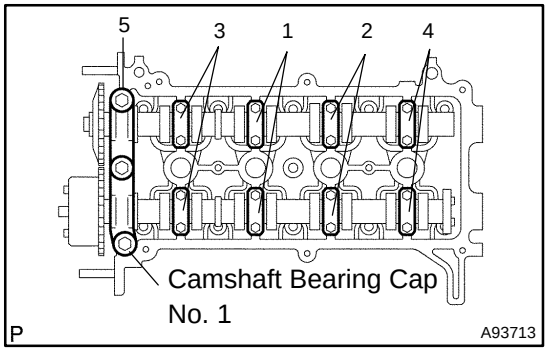

(4) Uniformly tighten the camshaft bearing caps No. 2 in several steps in the sequence shown in the illustration.

Torque: 13 N·m (130 kgf·cm, 9.6 ft·lbf)

NOTICE:

Uniformly loosen the bolts keeping the camshaft level.

(5) Install the camshaft bearing cap No. 1.

Torque: 23 N·m (235 kgf·cm, 17 ft·lbf)

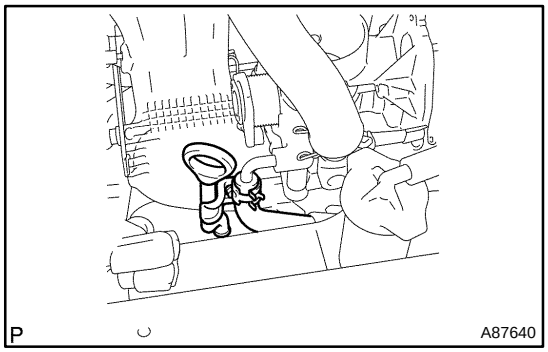

(h) Install the oil level gage guide with the bolt.

Torque: 9.0 N·m (92 kgf·cm, 80 in.·lbf)

(i) Connect the hose.

cardiagn.com

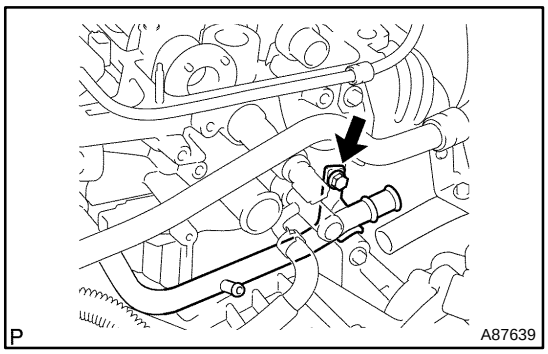

(j) Connect the water by–pass pipe with the bolt.
Torque: 9.0 N·m (92kgf·cm,80in.·lbf)

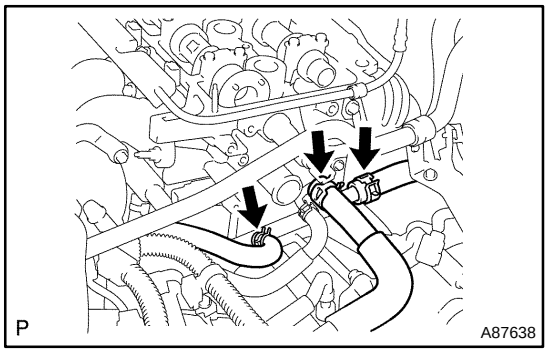

(k) Connect the hose shown in the illustration.

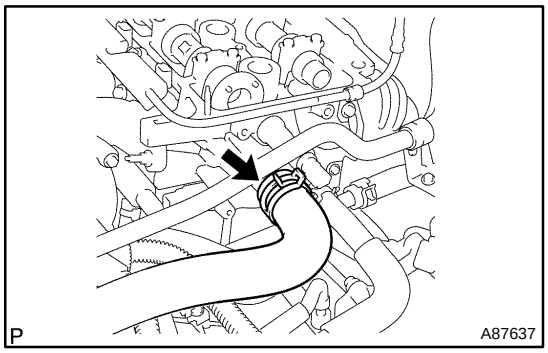

(l) Connect the radiator inlet hose.

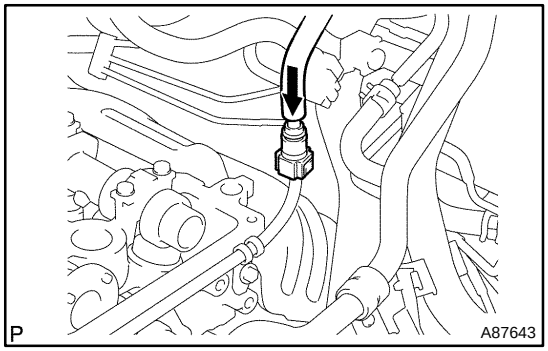

(m) Push the fuel tube into the fuel delivery pipe until it makes a ”click” sound.

HINT:

- If the fuel tube is connected too tightly, apply a light coat of engine oil to the tip of the fuel delivery pipe.
- After connecting, check that the fuel tube is securely connected by pulling it.

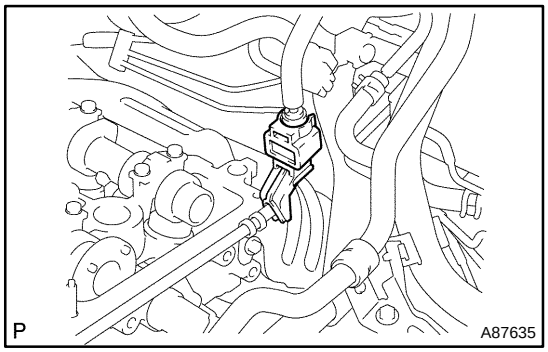

(n) Install the fuel pipe clamp.

cardiagn.com

(o) Connect the connectors and wiring harnesses shown in the illustration.

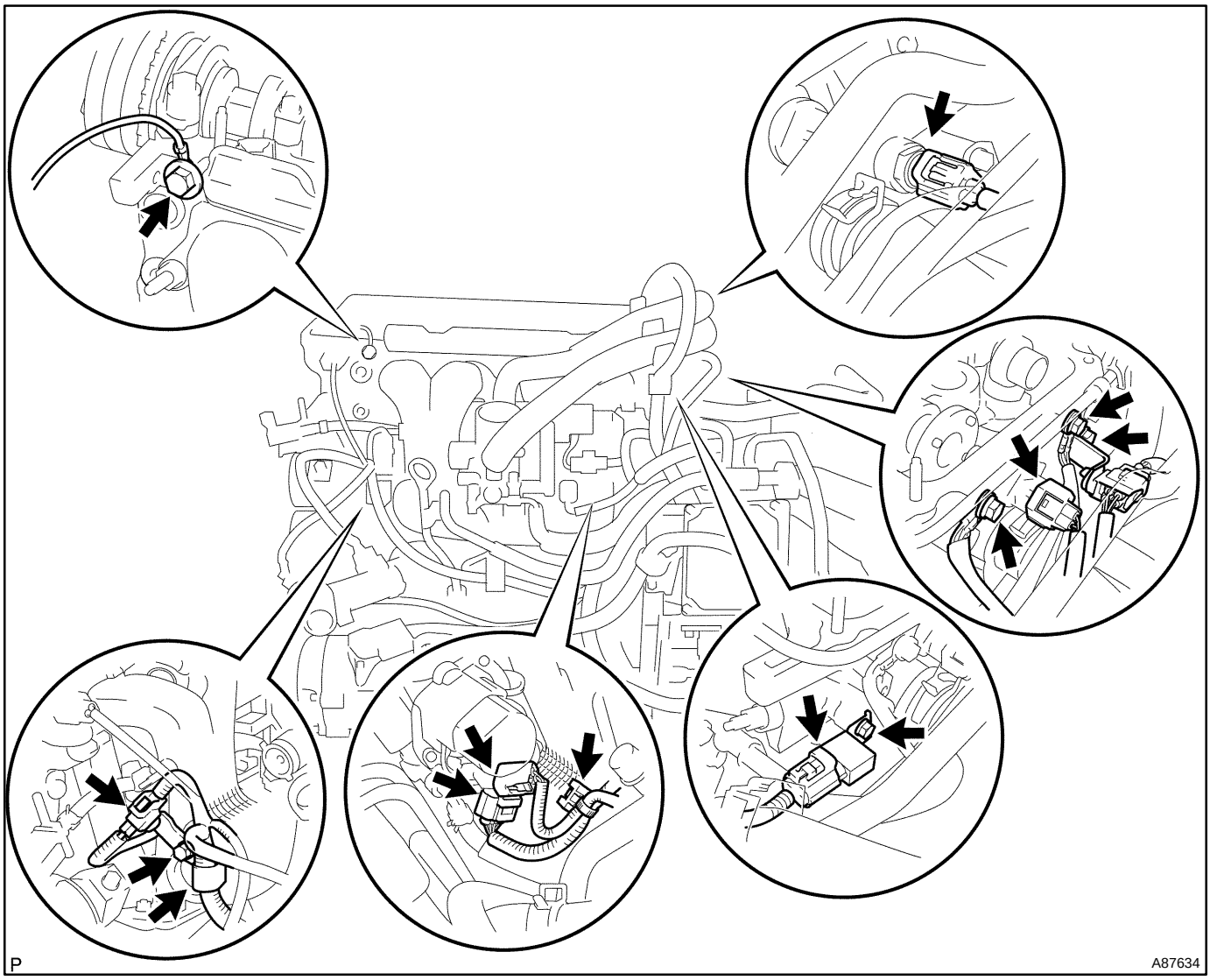

16. **INSTALL CHAIN SUB–ASSY (See page 14–87)**
17. **INSTALL W/CONVERTER INVERTER ASSY (See page 21–23)**
18. **CONNECT EXHAUST PIPE ASSY FRONT (See page 11–24)**
19. **INSTALL SERVICE PLUG GRIP (See page 21–116)**
20. **CONNECT BATTERY NEGATIVE TERMINAL**
    Torque: 6.0 N·m (61 kgf·cm, 53 in.·lbf)
21. **INSTALL REAR FLOOR BOARD NO.3**
22. **INSTALL DECK FLOOR BOX REAR**
23. **INSTALL REAR FLOOR BOARD NO.2**
24. **CHECK FOR FUEL LEAKS**
25. **POWER WINDOW CONTROL SYSTEM INITIALIZE (See page 01–28)**

cardiagn.com

OIL PUMP SEAL (1NZ–FXE)

141OV–01

REPLACEMENT

1. **REMOVE FRONT WHEEL RH**
2. **REMOVE FAN AND GENERATOR V BELT (See page 14–5)**
3. **REMOVE CRANKSHAFT DAMPER SUB–ASSY (See page 17–7)**
   SST 09213–58013 (91111–50845), 09330–00021, 09950–50013 (09951–05010, 09952–05010, 09953–05020, 09954–05021)

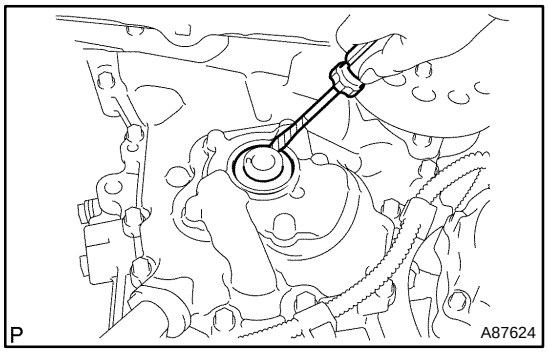

4. **REMOVE OIL PUMP SEAL**
   (a) Using a cutter knife, cut off the lip of the oil seal.
   (b) Using a screwdriver with its tip wrapped in tape, pry out the oil seal to remove.

NOTICE:
Check that the crankshaft is not damaged after removing the oil seal. If damaged, smooth the surface with 400–grit sandpaper.

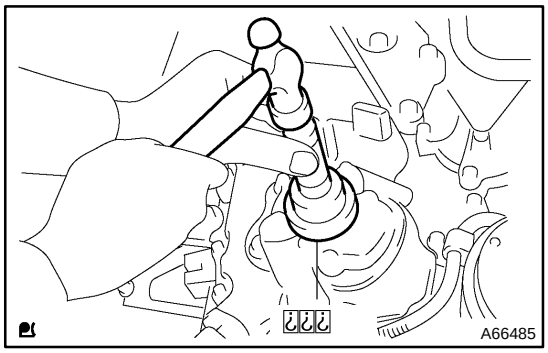

5. **INSTALL OIL PUMP SEAL**
   (a) Apply a light coat amount of multipurpose grease No. 2 to the lip of a new oil seal.

NOTICE:
Keep the lip free of foreign objects.

   (b) Using SST, uniformly tap in the oil seal until its surface is flush with the oil pump edge.
   SST 09223–22010

NOTICE:
- **Be careful not to tap the oil seal at an angle.**
- **Wipe off extra grease on the crankshaft.**

6. **INSTALL CRANKSHAFT DAMPER SUB–ASSY (See page 14–6)**
   SST 09213–58013 (91111–50845), 09330–00021
7. **INSTALL FAN AND GENERATOR V BELT (See page 14–6)**
8. **INSPECT DRIVE BELT DEFLECTION AND TENSION (See page 14–5)**
9. **CHECK FOR ENGINE OIL LEAKS**
10. **INSTALL FRONT WHEEL RH**
    Torque: 103 N·m (1050 kgf·cm, 76 ft·lbf)

cardiagn.com

ENGINE REAR OIL SEAL (1NZ–FXE)

141OW–01

REPLACEMENT

1. REMOVE HYBRID VEHICLE TRANSAXLE ASSY (See page 22–11)

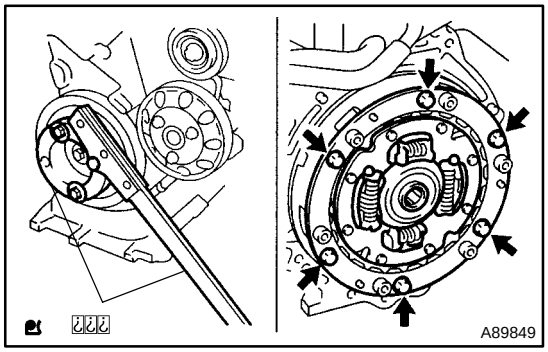

2. REMOVE TRANSMISSION INPUT DAMPER ASSY

(a) Using SST, hold the crankshaft.
SST 09213–58013 (91111–50845), 09330–00021

(b) Remove the 6 bolts, then remove the input damper and input damper cover.

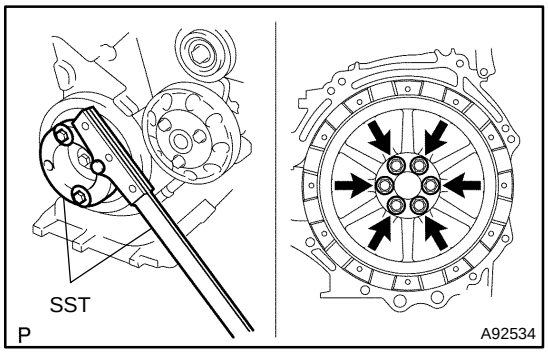

3. REMOVE FLYWHEEL SUB–ASSY

(a) Using SST, hold the crankshaft.
SST 09213–58013 (91111–50845), 09330–00021

(b) remove the 6 bolts and flywheel.

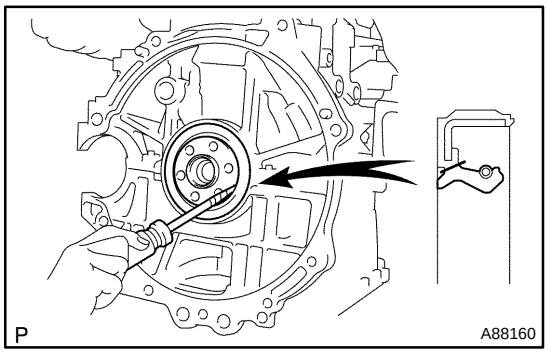

4. REMOVE ENGINE REAR OIL SEAL

(a) Using a cutter knife, cut off the lip of the oil seal.

(b) Using a screwdriver with its tip wrapped in tape, pry out the oil seal to remove.

NOTICE:

Check theat the crankshaft is not damaged after removing the oil seal. If damaged, smooth the surface with 400–grit sandpaper.

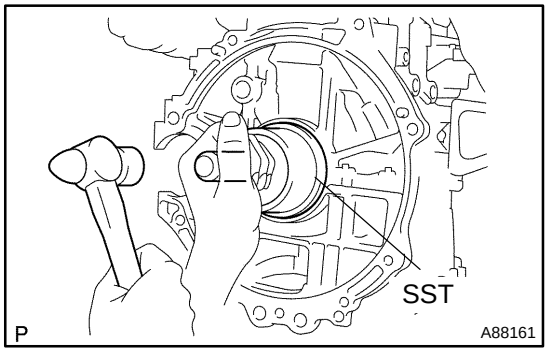

5. INSTALL ENGINE REAR OIL SEAL

(a) Apply a light coat amount of multipurpose grease No. 2 to the lip of a new oil seal.

NOTICE:

Keep the lip free of foreign objects.

(b) Using SST, uniformly tap in the oil seal until its surface is flush with the cylinder block edge.
SST 09223–56010

NOTICE:

- **Be careful not to tap the oil seal at an angle.**
- **Wipe off extra grease on the crankshaft.**

cardiagn.com

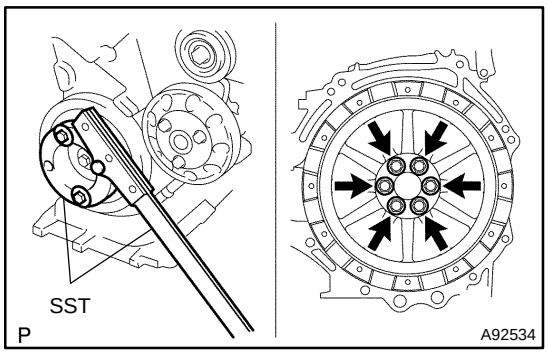

6. INSTALL FLYWHEEL SUB–ASSY

(a) Apply adhesive to the 2 or 3 threads of the bolt end.
Adhesive:
Part No. 08833–00070, THREE BOND 1324, or equivalent

NOTICE:
Remove any oil from the bolts and bolt holes.

(b) Using SST, hold the crankshaft.
SST 09213–58013 (91111–50845), 09330–00021

(c) Install the flywheel with the 6 bolts.
Torque: 49 N·m (500 kgf·cm, 36 ft·lbf)

(d) After tightening the bolts with the specified torque, tighten each bolt by more 90◆.

NOTICE:
Do not start the engine within 1 hour of installation.

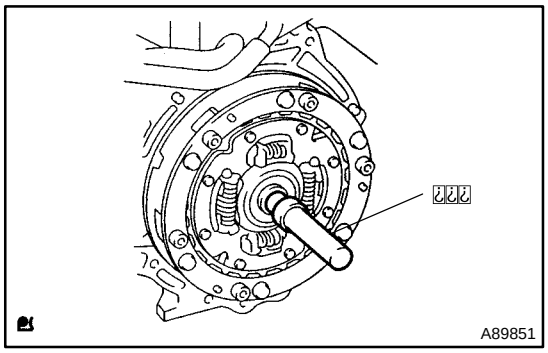

7. INSTALL TRANSMISSION INPUT DAMPER ASSY

(a) Using SST, align the hole of the input damper. Then temporarily tighten the input damper cover with the 6 bolts.
SST 09301–00210

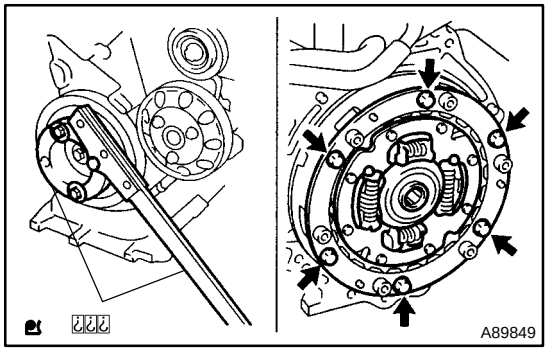

(b) Using SST, hold the crankshaft.
SST 09213–58013 (91111–50845), 09330–00021
Torque: 20 N·m (204 kgf·cm, 15 ft·lbf)

8. INSTALL HYBRID VEHICLE TRANSAXLE ASSY (See page 22–11)

cardiagn.com

CYLINDER HEAD ASSY (1NZ–FXE)

141OX–01

COMPONENTS

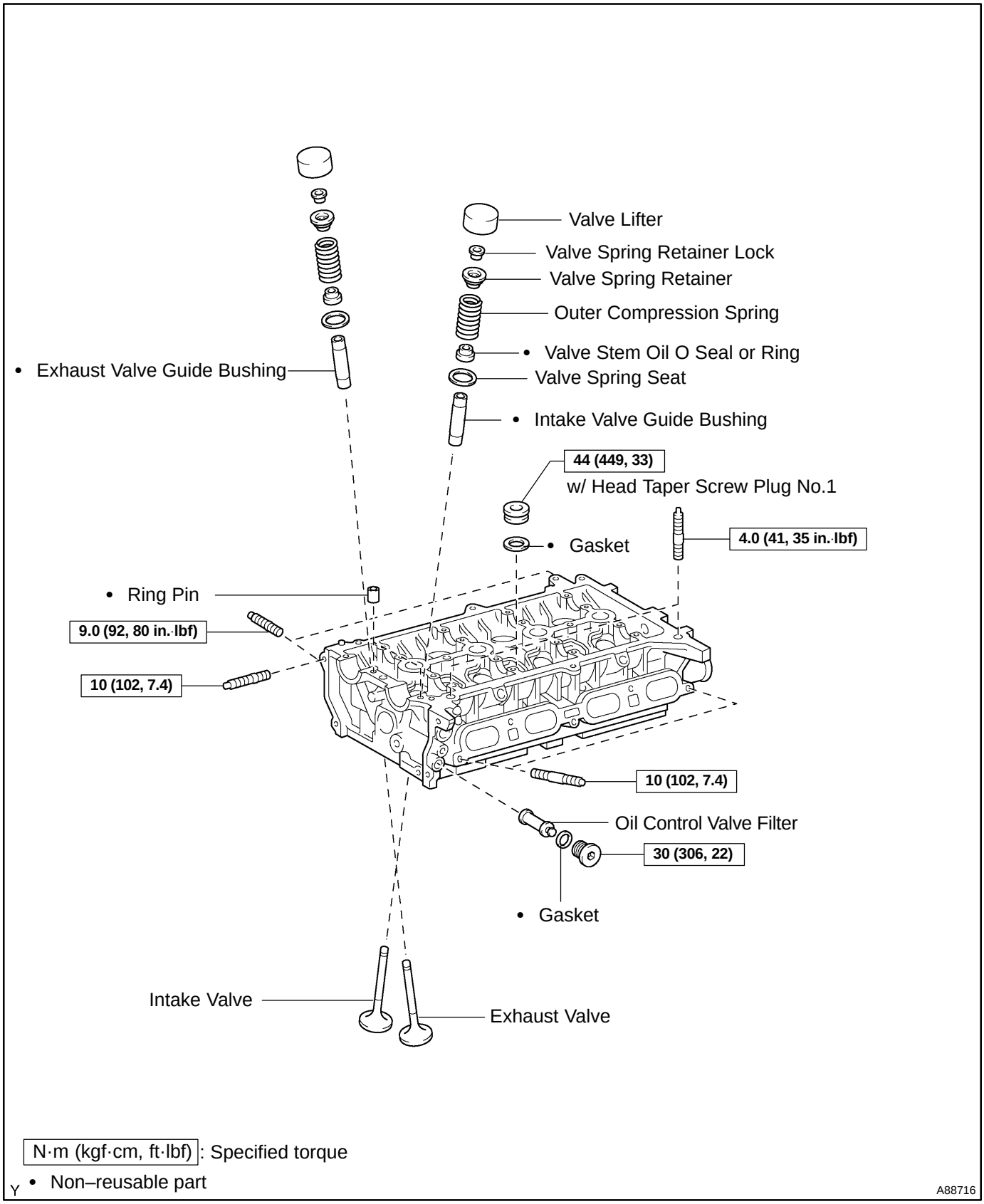

cardiagn.com

141OY–01

OVERHAUL

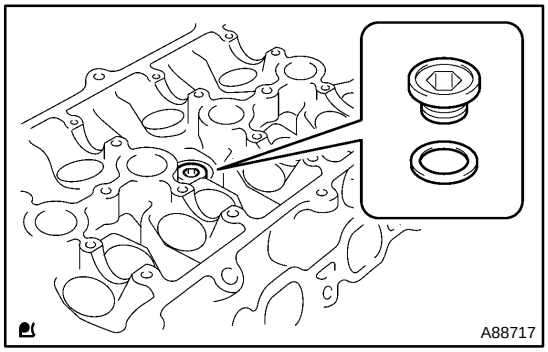

1. REMOVE W/HEAD TAPER SCREW PLUG NO.1

(a) Using a 10 mm socket hexagon wrench, remove the taper screw plug with head No. 1 and gasket.

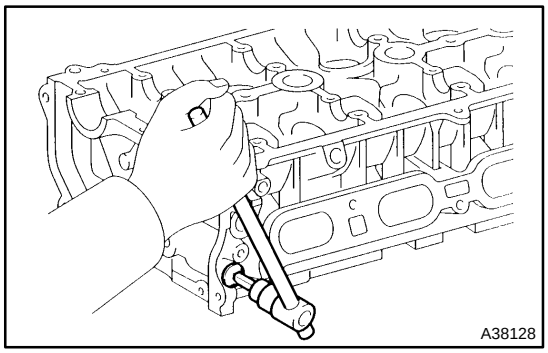

2. REMOVE OIL CONTROL VALVE FILTER

(a) Using an 8 mm hexagon wrench, remove the taper screw plug with head No. 2.

(b) Remove the oil control valve filter and gasket.

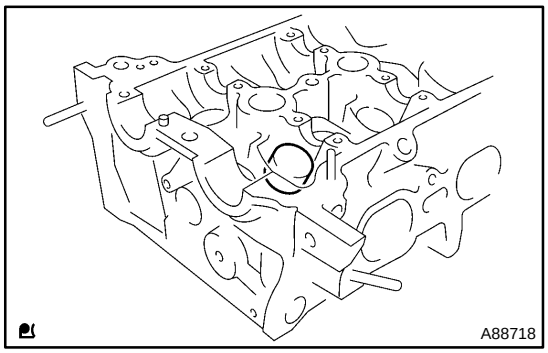

3. REMOVE VALVE LIFTER

HINT:

Keep the removed parts in the correct order so that they can be returned to the original locations when reassembling.

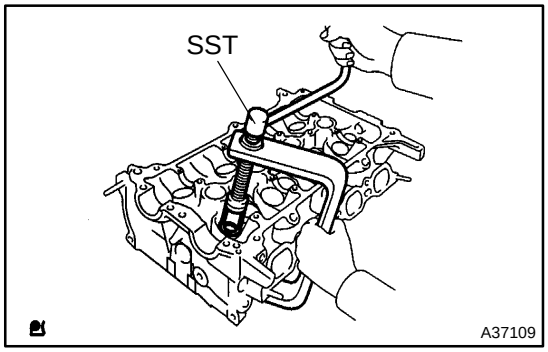

4. REMOVE INTAKE VALVE

(a) Using SST, remove the retainer lock.

SST 09202–70020 (09202–00010, 09202–01010, 09202–01020)

(b) Remove the retainer, compression spring and valve.

HINT:

Keep the removed parts in the correct order so that they can be returned to the original locations when reassembling.

5. REMOVE EXHAUST VALVE

(a) Using SST, remove the retainer lock.

SST 09202–70020 (09202–00010, 09202–01010, 09202–01020)

cardiagn.com

(b) Remove the retainer, compression spring and valve.

HINT:

Keep the removed parts in the correct order so that they can be returned to the original locations when reassembling

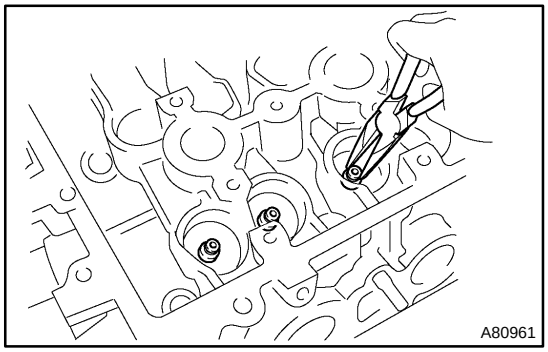

6. REMOVE VALVE STEM OIL O SEAL OR RING

(a) Using needle–nose pliers, remove the oil seal.

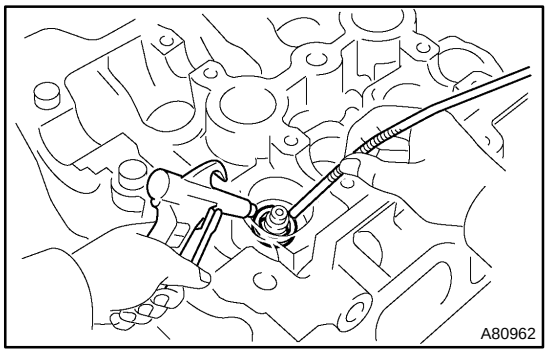

7. REMOVE VALVE SPRING SEAT

(a) Using a magnetic finger and compression air, remove the valve spring seat.

8. REMOVE STUD BOLT

(a) Remove the 7 stud bolts indicated in the illustration.

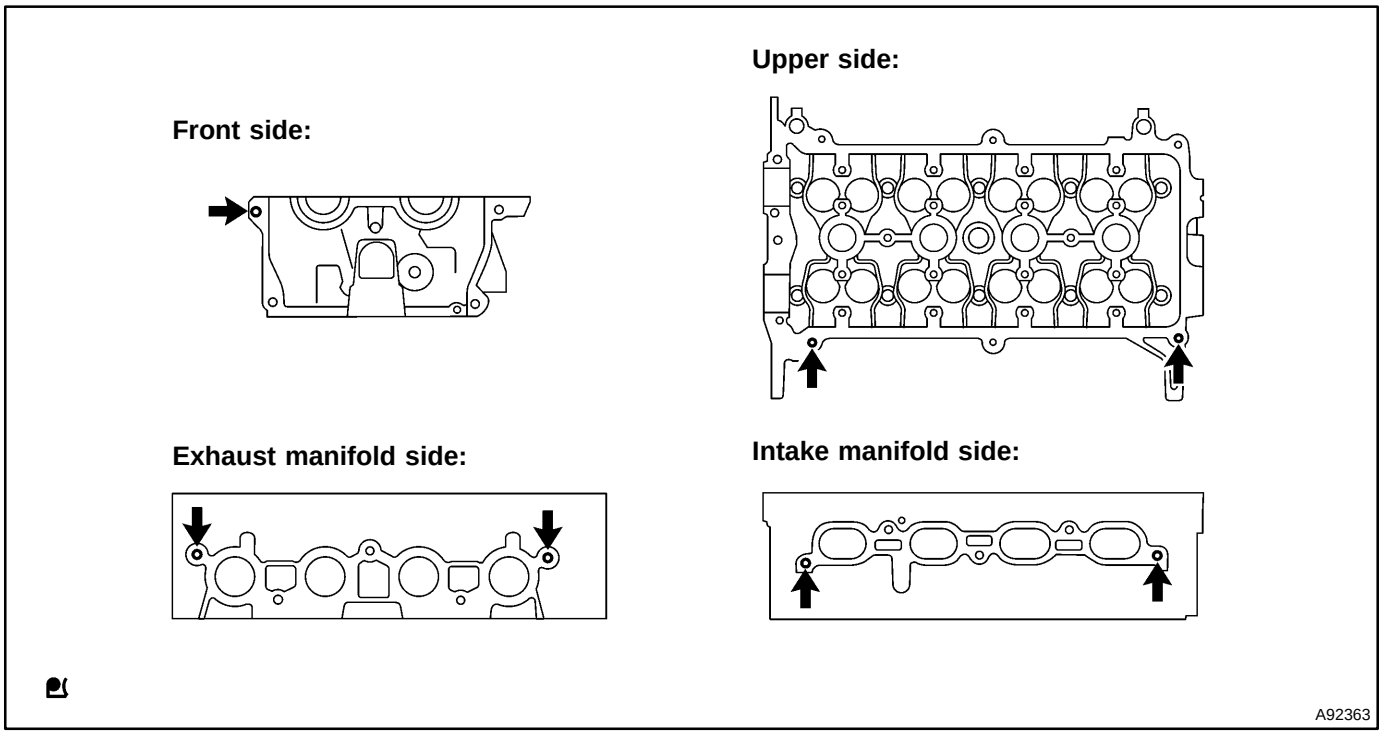

cardiagn.com

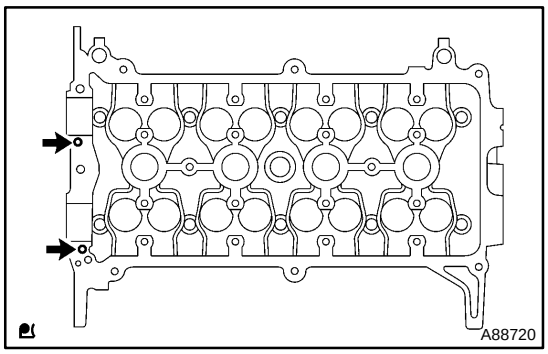

9. REMOVE CAMSHAFT BEARING CAP SETTING RING PIN

(a) Remove the 2 ring pins indicated in the illustration.

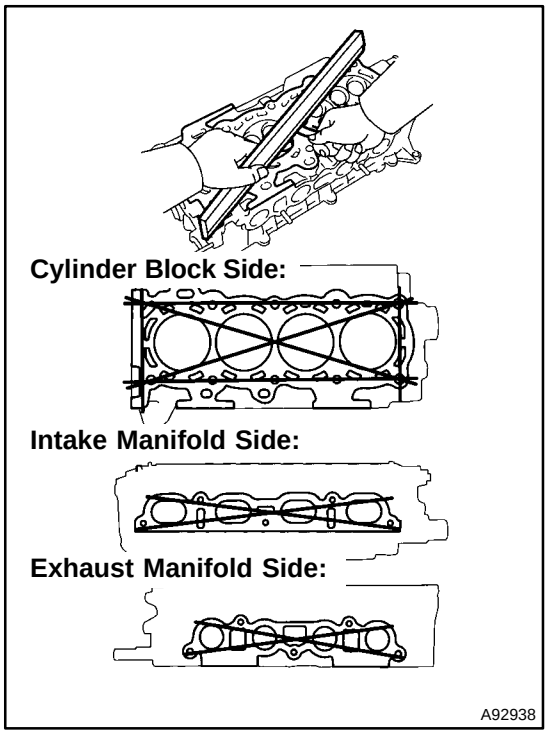

10. INSPECT CYLINDER HEAD FOR FLATNESS

(a) Using a precision straight edge and feeler gauge, measure the warpage on the cylinder block side and the intake and exhaust manifold sides.

Maximum warpage:
0.05 mm (0.0020 in.) for cylinder block side
0.10 mm (0.0039 in.) for intake manifold side
0.10 mm (0.0039 in.) for exhaust manifold side

If the warpage is greater than maximum, replace the cylinder head.

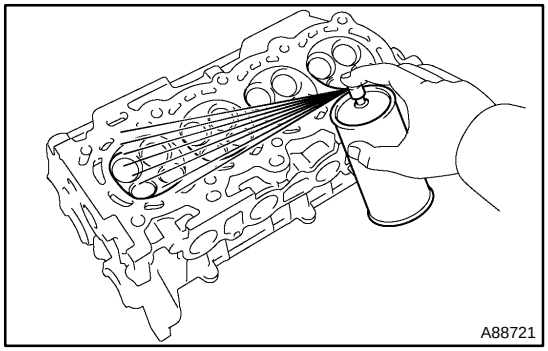

11. INSPECT CYLINDER HEAD FOR CRACKS

(a) Using a dye penetrate, check the combustion chambers, intake ports, exhaust ports and contact surface of the cylinder block for cracks.

If cracked, replace the cylinder head.

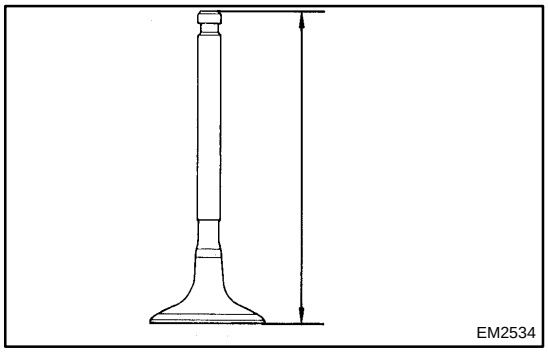

12. INSPECT INTAKE VALVE

(a) Using vernier calipers, measure the overall length of the intake valve.

Standard overall length: 89.25 mm (3.5138 in.)
Minimum overall length: 88.95 mm (3.5020 in.)

If the overall length is less than minimum, replace the valve.

cardiagn.com

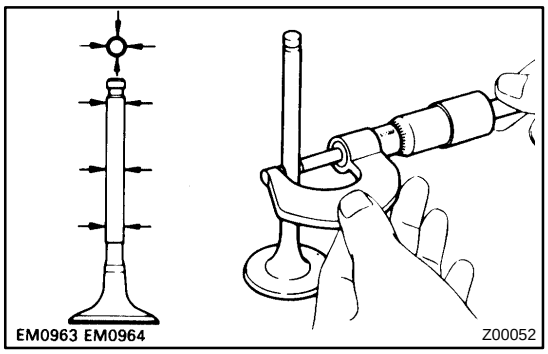

(b) Using a micrometer, measure the diameter of the valve stem.
Valve stem diameter:
4.970 to 4.985 mm (0.1957 to 0.1963 in.)

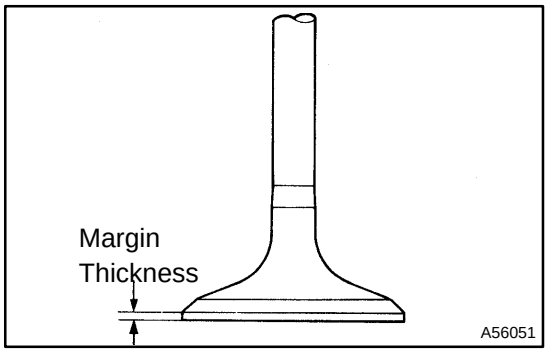

(c) Using vernier calipers, measure the thickness of the valve head margin.
Standard margin thickness: 1.0 mm (0.039 in.)
Minimum margin thickness: 0.7 mm (0.028 in.)
If the margin thickness is less than minimum, replace the valve.

13. INSPECT EXHAUST VALVE

(a) Using vernier calipers, measure the overall length of the exhaust valve.
Standard overall length: 87.90 (3.4606 in.)
Minimum overall length: 87.60 (3.4488 in.)
If the overall length is less than minimum, replace the valve.

(b) Using a micrometer, measure the diameter of the valve stem.
Valve stem diameter: 4.965 to 4.980 mm (0.1955 to 0.1961 in)

(c) Using vernier calipers, measure the thickness of the valve head margin.
Standard margin thickness: 1.15 mm (0.0453 in.)
Minimum margin thickness: 0.85 mm (0.0335 in.)
If the margin thickness is less than minimum, replace the valve.

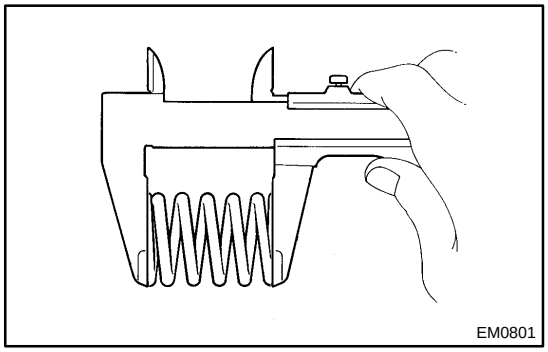

14. INSPECT OUTER COMPRESSION SPRING

(a) Using vernier calipers, measure the free length of the valve spring.
Free length: 59.77 mm (2.3531 in.)
If the free length is not as specified, replace the valve spring.

cardiagn.com

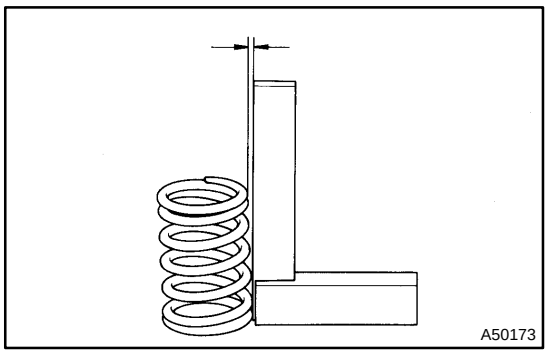

(b) Using a steel square, measure the deviation of the valve spring.
Maximum deviation: 1.6 mm (0.063 in.)
Maximum angle: 2◆

If the deviation is not as specified, replace the valve spring.

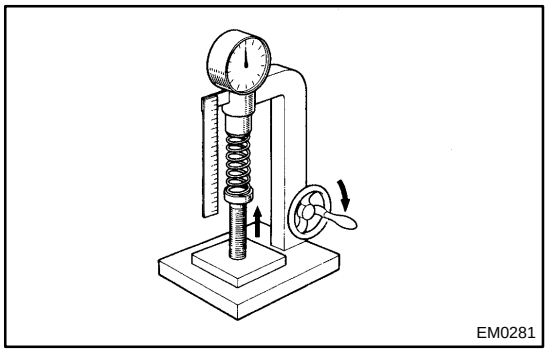

(c) Using a spring tester, measure the tension of the spring when the spring is the specified installed length.
Installed tension:
140 to 154 N (14.2 to 15.7 kgf, 31.5 to 34.6 lbf) at 32.5 mm (1.280 in.)
Maximum working tension:
180 to 198 N (18.4 to 20.2 kgf, 40.5 to 44.5 lbf) at 25.1 mm (0.988 in.)

If the tension is not as specified, replace the valve spring.

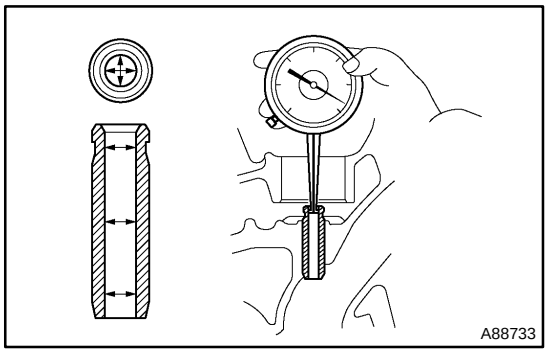

15. INSPECT VALVE GUIDE BUSHING OIL CLEARANCE

(a) Using a caliper gauge, measure the internal diameter of the valve guide bushing.
Bushing inside diameter:
5.010 to 5.030 mm (0.1972 to 0.1980 in.)

(b) Subtract the valve stem diameter measurement from the internal diameter measurement of the valve guide bushing.
Standard oil clearance:
0.025 to 0.060 mm (0.0010 to 0.0024 in.) for intake side
0.030 to 0.065 mm (0.0012 to 0.0026 in.) for exhaust side
Maximum oil clearance:
0.08 mm (0.0031 in.) for intake side
0.10 mm (0.0039 in.) for exhaust side

If the clearance is greater than maximum, replace the valve and valve guide bush.

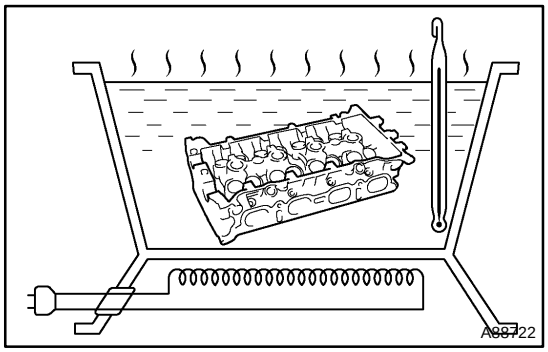

16. REMOVE INTAKE VALVE GUIDE BUSHING

(a) Heat the cylinder head up to 80 to 100◆C

cardiagn.com

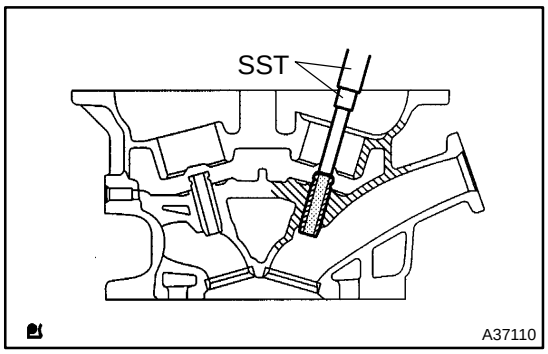

(b) Using SST and a hammer, tap out the valve guide bushing to the combustion chamber side.
SST 09201–10000 (09201–01050), 09950–70010 (09951–07100)

17. REMOVE EXHAUST VALVE GUIDE BUSHINGS

(a) Heat the cylinder head up to 80 to 100◆C

(b) Using SST and a hammer, tap out the valve guide bushing to the combustion chamber side.
SST 09201–10000 (09201–01050), 09950–70010 (09951–07100)

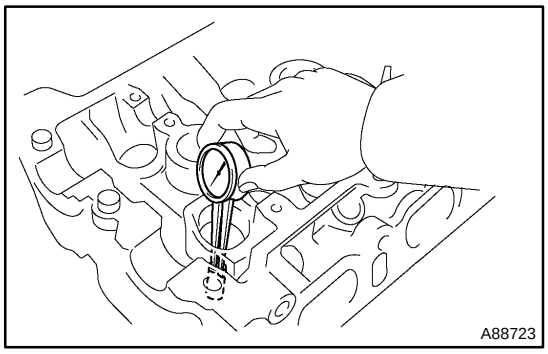

18. INSTALL INTAKE VALVE GUIDE BUSHING

(a) Using a caliper gauge, measure the bushing bore diameter of the cylinder head.
Diameter: 9.685 to 9.706 mm (0.3813 to 0.3821 in.)

HINT:

- If the bushing bore diameter is as specified, install the standard bushing.
- If the bushing bore diameter is not as specified, correct it to 9.735 to 9.755 mm (0.3833 to 0.3841 in.) and install the oversize bushing.

Bushing size	Bushing bore diameter mm (in.)
Standard	9.685 to 9.706 (0.3813 to 0.3821)
Over size	9.735 to 9.755 (0.3833 to 0.3841)

(b) Heat the cylinder head up to 80 to 100◆C.

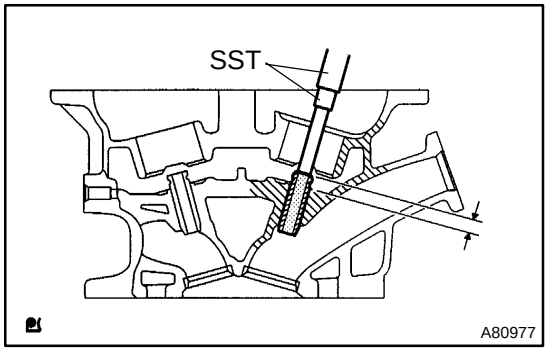

(c) Using SST and a hammer, tap in a new valve guide bushing to the specified protrusion height.
SST 09201–10000 (09201–01050), 09950–70010 (09951–07100)
Protrusion height: 9.0 to 9.4 mm (0.354 to 0.370 in.)

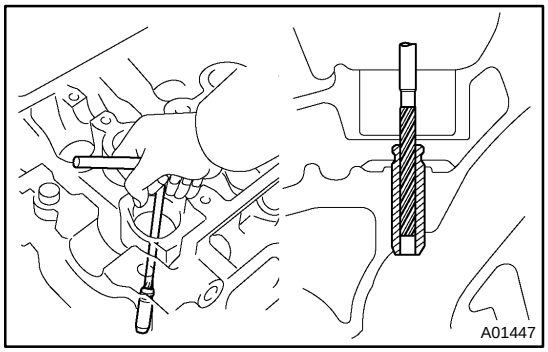

(d) Using a reamer, ream inside the valve guide bushing to obtain the specified oil clearance between the valve guide bushing and valve stem.
Standard oil clearance:
0.025 to 0.060 mm (0.0010 to 0.0024 in.)

cardiagn.com

19. INSTALL EXHAUST VALVE GUIDE BUSHINGS

(a) Using a caliper gauge, measure the bushing bore diameter of the cylinder head.
Diameter: 9.685 to 9.706 mm (0.3813 to 0.3821 in.)

HINT:

- If the bushing bore diameter is as specified, install the standard bushing.
- If the bushing bore diameter is not as specified, correct it to 9.735 to 9.755 mm and install the oversize bushing.

Bushing size	Bushing bore diameter mm (in.)
Standard	9.685 to 9.706 (0.3813 to 0.3821)
Over size	9.735 to 9.755 (0.3833 to 0.3841)

(b) Heat the cylinder head up to 80 to 100◆C.

(c) Using SST and a hammer, tap in a new valve guide bushing to the specified protrusion height.
SST 09201–10000 (09201–01050), 09950–70010 (09951–07100)
Protrusion height: 9.0 to 9.4 mm (0.354 to 0.370 in.)

(d) Using a reamer, ream inside the valve guide bushing to obtain the specified oil clearance between the valve guide bushing and valve stem.
Standard oil clearance: 0.030 to 0.065 mm (0.0012 to 0.0026 in.)

20. INSPECT VALVE SEATS

(a) Apply a light coat of prussian blue (or white lead) to the valve face.

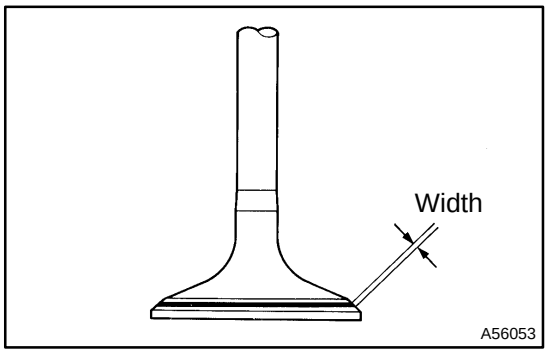

(b) Check the valve face and valve seat by the following procedures.
(1) If blue appears 360◆C around the valve face, the valve is concentric. If not, replace the valve.
(2) If blue appears 360◆C around the valve seat, the guide and valve face are concentric. If not, resurface the valve seat.
(3) Check that the valve seat contact is in the middle of the valve face with the width between 1.0 and 1.4 mm (0.039 to 0.055 in.)

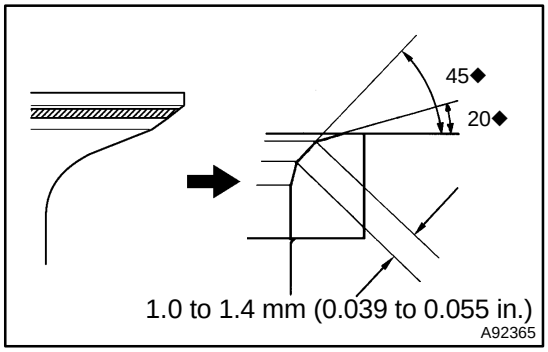

21. REPAIR INTAKE VALVE SEAT

NOTICE:

Gradually releasing the seat cutter pressure makes smooth valve seat surface.

(a) If the valve seating is too high on the valve face, use the 20◆and 45◆cutters to correct the valve seat.

cardiagn.com

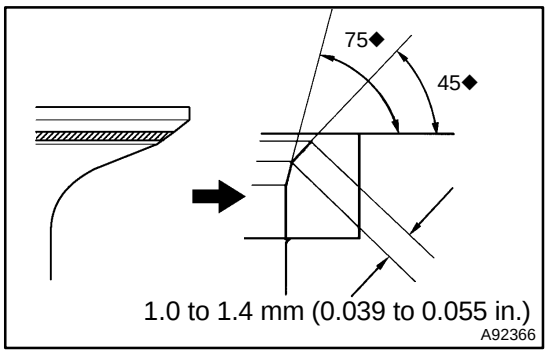

(b) If the valve seating is too low on the valve face, use the 45◆and 75◆cutters to correct the valve seat.
(c) Lap the valve and valve seat with an abrasive compound.
(d) Recheck the valve seating surface.

22. REPAIR EXHAUST VALVE SEAT

NOTICE:

Gradually releasing the seat cuter pressure makes smooth valve seat surface.

(a) If the valve seating is too high on the valve face, use the 20◆and 45◆cutters to correct the valve seat.
(b) If the valve seating is too low on the valve face, use the 45◆and 75◆cutters to correct the valve seat.
(c) Lap the valve and valve seat with an abrasive compound.
(d) Recheck the valve seating surface.

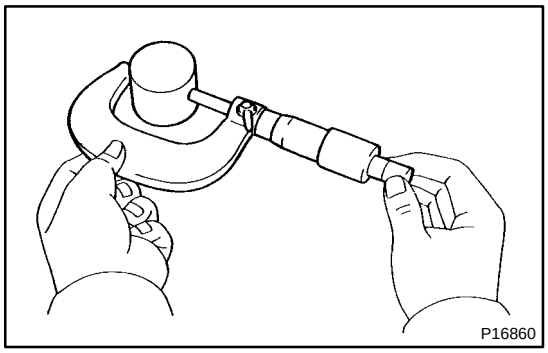

23. INSPECT VALVE LIFTER

(a) Using a micrometer, measure the lifter diameter.
Lifter diameter:
30.966 to 30.976 mm (1.2191 to 1.2195 in.)

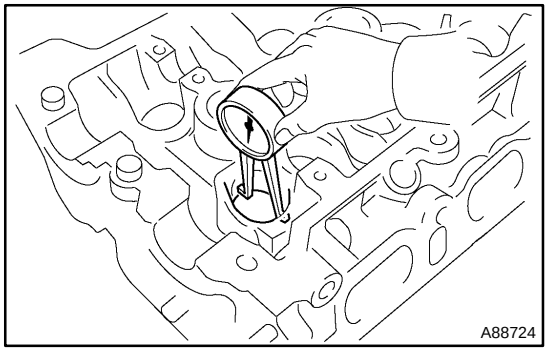

24. INSPECT VALVE LIFTER OIL CLEARANCE

(a) Using a caliper gauge, measure the lifter bore diameter of the cylinder head.
Lifter bore diameter:
31.009 to 31.025 mm (1.2208 to 1.2215 in.)
(b) Subtract the lifter diameter measurement from the lifter bore diameter measurement to obtain the oil clearance.
Standard oil clearance:
0.033 to 0.059 mm (0.0013 to 0.0023 in.)
Maximum oil clearance: 0.100 mm (0.0039 in.)
- If the clearance is greater than maximum, replace the valve lifter.
- If necessary, replace the cylinder head.

cardiagn.com

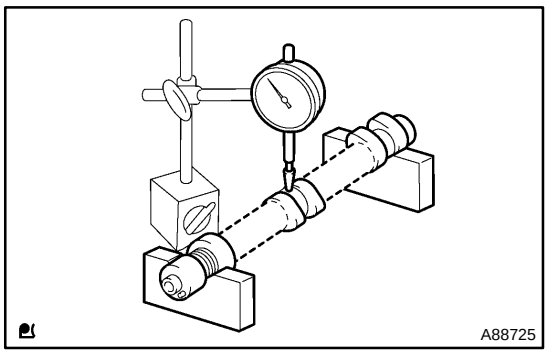

25. INSPECT CAMSHAFT

(a) Inspect the circle runout.

(1) Place the camshaft on V–blocks.

(2) Using a dial indicator, measure the circle runout of the camshaft at the center journal.

Maximum circle runout: 0.03 mm (0.0012 in.)

If the circle runout is greater than maximum, replace the camshaft.

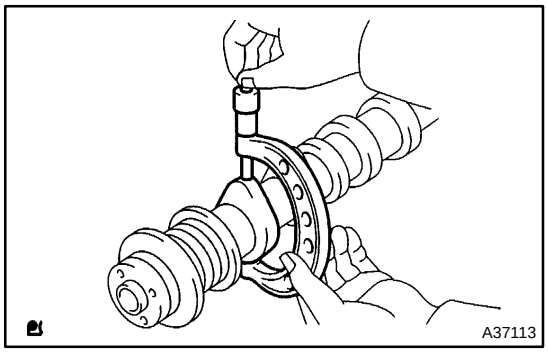

(b) Inspect the height of the cam lobes.

(1) Using a micrometer, measure the cam lobe height.

Standard cam lobe height:
42.310 to 42.410 mm (1.6657 to 1.6697 in.)
Minimum cam lobe height: 42.16 mm (1.6598 in.)

If the cam lobe height is less than minimum, replace the camshaft.

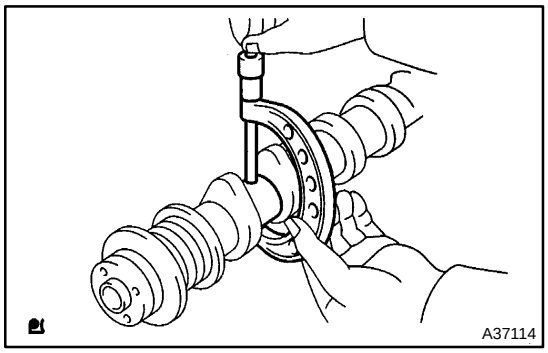

(c) Inspect the diameter of the cam journals.

(1) Using a micrometer, measure the cam journal diameter.

No. 1 journal diameter:
34.449 to 34.465 mm (1.3563 to 1.3569 in.)
Other journals diameter:
22.949 to 22.965 mm (0.9035 to 0.9041 in.)

If the cam journal diameter is not as specified, inspect the oil clearance.

26. INSPECT NO.2 CAMSHAFT

(a) Inspect the circle runout.

(1) Place the camshaft on V–blocks.

(2) Using a dial indicator, measure the circle runout of the camshaft at the center journal.

Maximum circle runout: 0.03 mm (0.0012 in.)

If the circle runout is greater than maximum, replace the camshaft.

(b) Inspect the height of the cam lobes.

(1) Using a micrometer, measure the cam lobe height.

Standard cam lobe height: 44.046 to 44.146 mm (1.7341 to 1.7380 in.)
Minimum cam lobe height: 43.90 mm (1.7283 in.)

If the cam lobe height is less than minimum, replace the camshaft.

(c) Inspect the diameter of the cam journals.

(1) Using a micrometer, measure the cam journal diameter.

No. 1 journal diameter: 34.449 to 34.465 mm (1.3563 to 1.3569 in.)
Other journals diameter: 22.949 to 22.965 mm (0.9035 to 0.9041 in.)

If the cam journal diameter is not as specified, inspect the oil clearance.

cardiagn.com

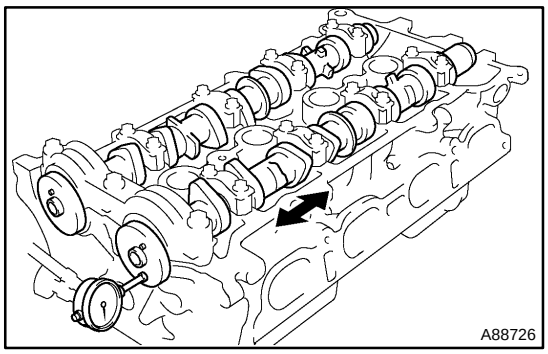

27. INSPECT CAMSHAFT THRUST CLEARANCE

(a) Set the camshaft to the cylinder head, then install the camshaft bearing cap (see page 14–45).

(b) Using a dial indicator, measure the thrust clearance of the camshaft while moving the camshaft back and forth.
Standard thrust clearance:
0.040 to 0.095 mm (0.0016 to 0.0037 in.)
Maximum thrust clearance: 0.11 mm (0.0043 in.)

If the thrust clearance is greater than maximum, replace the cylinder head. If the thrust of the camshaft is scratched, replace the camshaft, too.

28. INSPECT CAMSHAFT OIL CLEARANCE

(a) Clean the camshaft and bearing cap.

(b) Set the camshaft to the cylinder head.

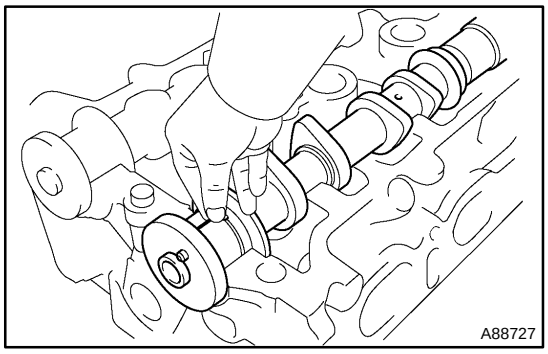

(c) Lay a strip of Plastigage across the camshaft journal.

NOTICE:
Do not turn the camshaft when measuring.

(d) Install the bearing cap (see page 14–45).

(e) Remove the bearing cap (see page 14–45).

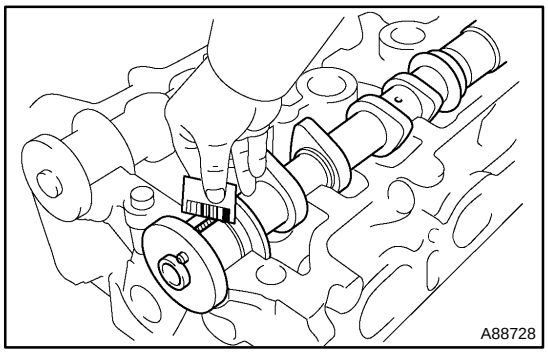

(f) Measure the Plastigage at its widest point.
Standard oil clearance:
0.040 to 0.095 mm (0.0016 to 0.0037 in.)
Maximum oil clearance: 0.115 mm (0.0045 in.)

NOTICE:
Completely remove the Plastigage.

If the width is greater than maximum, replace the cylinder head.

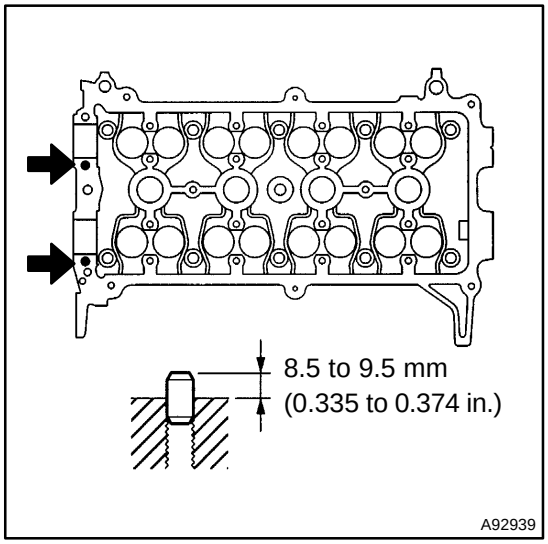

29. INSTALL CAMSHAFT BEARING CAP SETTING RING PIN

(a) Using a plastic–faced hammer, tap in 2 new ring pins to the specified protrusion height.
Protrusion height: 8.5 to 9.5 mm (0.335 to 0.374 in.)

cardiagn.com

30. INSTALL STUD BOLT

(a) Install the 7 stud bolts in the positions shown in the illustration.

Torque:
10 N·m (102 kgf·cm, 7.4 ft·lbf) for bolt A
4.0 N·m (41 kgf·cm, 35 in.·lbf) for bolt B
10 N·m (102 kgf·cm, 7.4 ft·lbf) for bolt C
9.0 N·m (92 kgf·cm, 80 in.·lbf) for bolt D

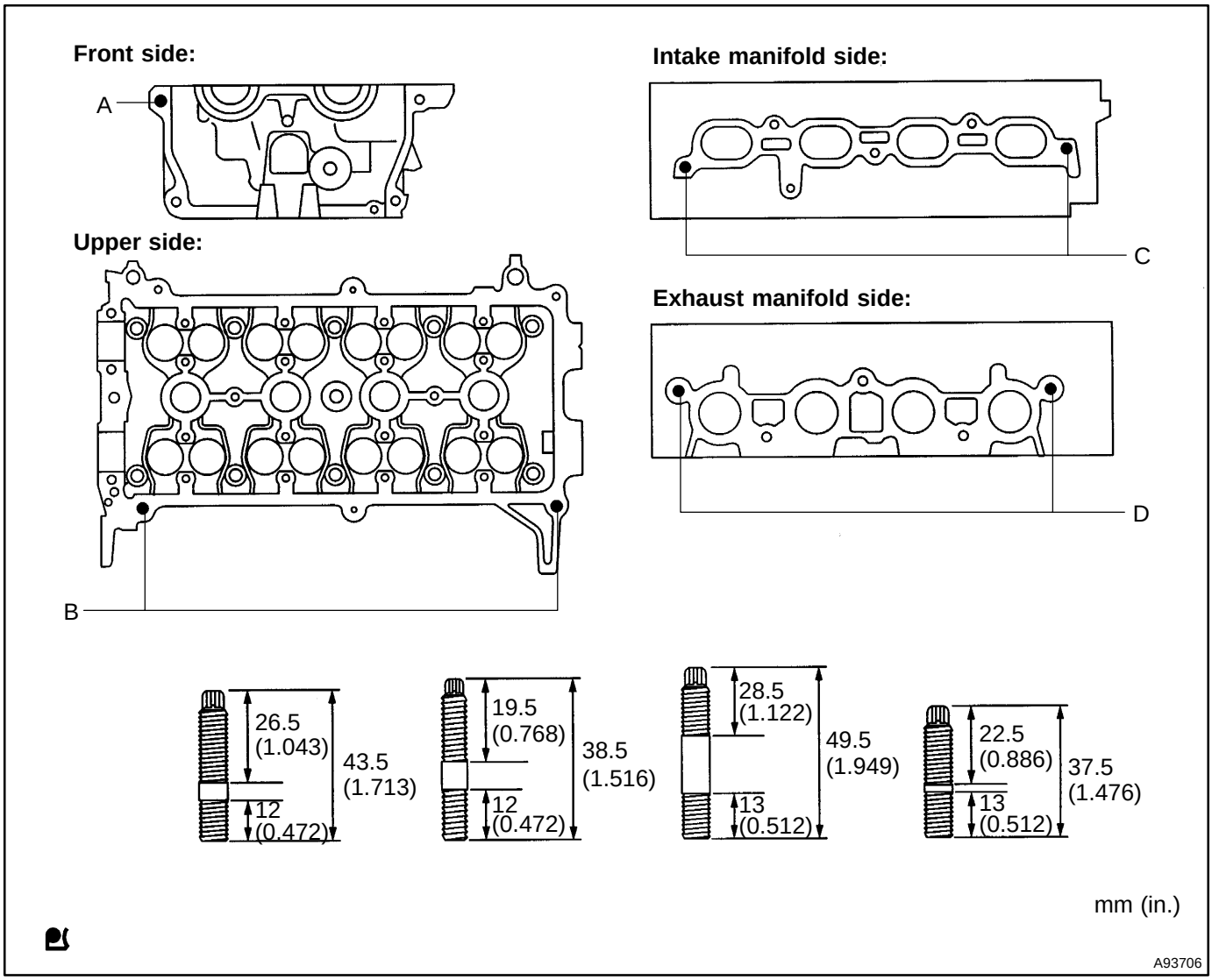

31. INSTALL VALVE SPRING SEAT

cardiagn.com

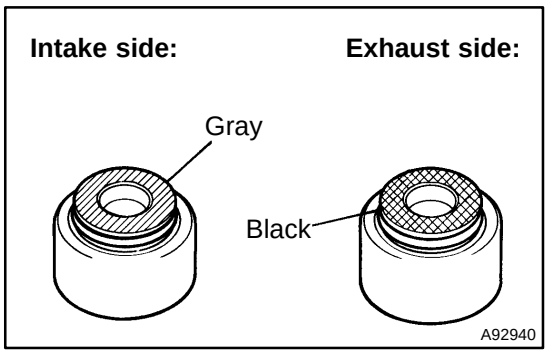

32. INSTALL VALVE STEM OIL O SEAL OR RING

(a) Apply a light coat of engine oil to the rubber lip of a new valve stem oil seal.

NOTICE:

Installing oil seals for intake and exhaust to the opposite valve guide bushes may cause failures.

HINT:

The intake oil seal is gray and the exhaust oil seal is black.

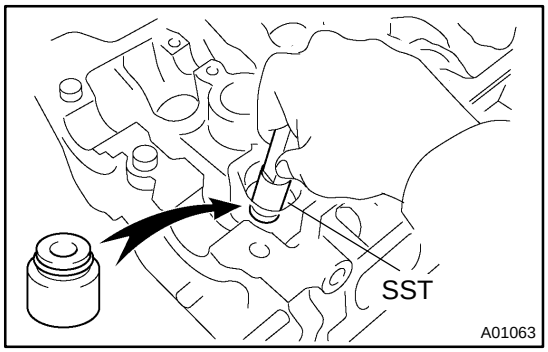

(b) Using SST, install the oil seal.
SST 09201–41020

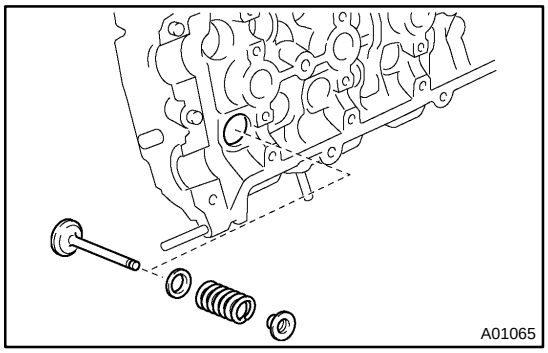

33. INSTALL INTAKE VALVE

(a) Install the valve, valve spring seat, valve spring and retainer to the cylinder head.

NOTICE:

Install the parts to their original locations.

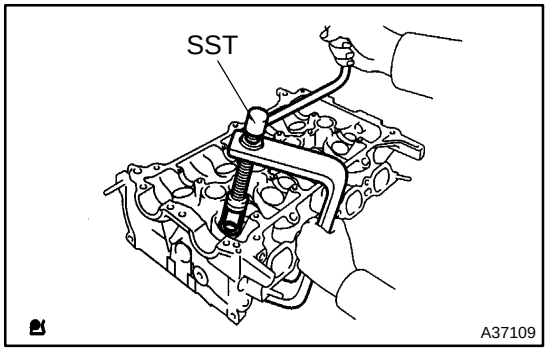

(b) Using SST, install the retainer lock.
SST 09202–70020 (09202–00010, 09202–01010, 09202–01020)

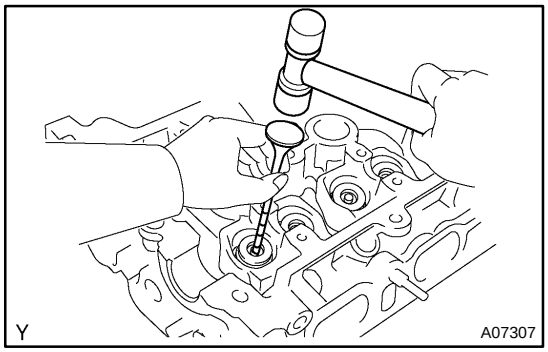

(c) Using a plastic–faced hemmer and discarded valve with its tip wrapped in tape, lightly tap the installed valve to ensure proper fit.

NOTICE:

Be careful not to damage the tip of the valve stem.

cardiagn.com

34. INSTALL EXHAUST VALVE

(a) Install the valve, valve spring seat, valve spring and retainer to the cylinder head.

(b) Using SST, install the retainer lock.
SST 09202–70020 (09202–00010, 09202–01010, 09202–01020)

(c) Using a plastic–faced hammer and discarded valve with its tip wrapped in tape, lightly tap the installed valve to ensure proper fit.

NOTICE:

Be careful not to damage the tip of the valve stem.

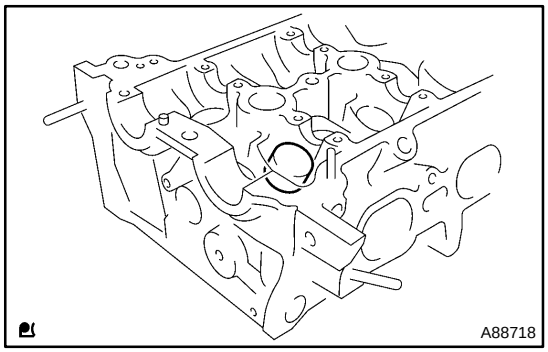

35. INSTALL VALVE LIFTER

(a) Apply a light coat of engine oil to the valve lifter.

(b) Install the valve lifter to the cylinder head.

NOTICE:

Install the parts to their original locations.

(c) Check that the valve lifter turns smoothly.

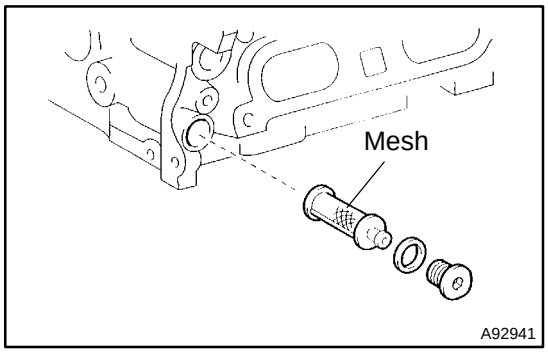

36. INSTALL OIL CONTROL VALVE FILTER

(a) Check that there are no foreign objects on the mesh, then install the valve filter to the cylinder head.

(b) Using an 8 mm hexagon wrench, install a new gasket and the taper screw plug with head No. 2.
Torque: 30 N·m (306 kgf·cm, 22 ft·lbf)

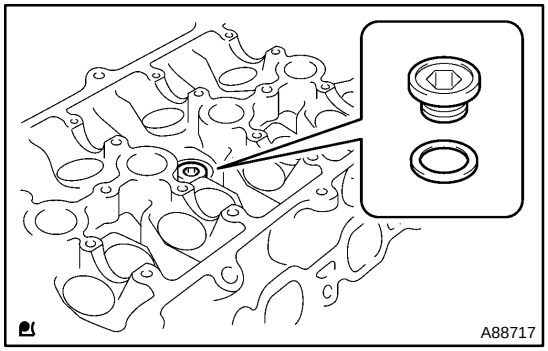

37. INSTALL W/HEAD TAPER SCREW PLUG NO.1

(a) Install a new gasket to the plug.

(b) Using a 10 mm socket hexagon wrench, install the taper screw plug with head No. 1.
Torque: 44 N·m (449 kgf·cm, 32 ft·lbf)

cardiagn.com

CYLINDER BLOCK ASSY (1NZ–FXE)

141MM–01

COMPONENTS

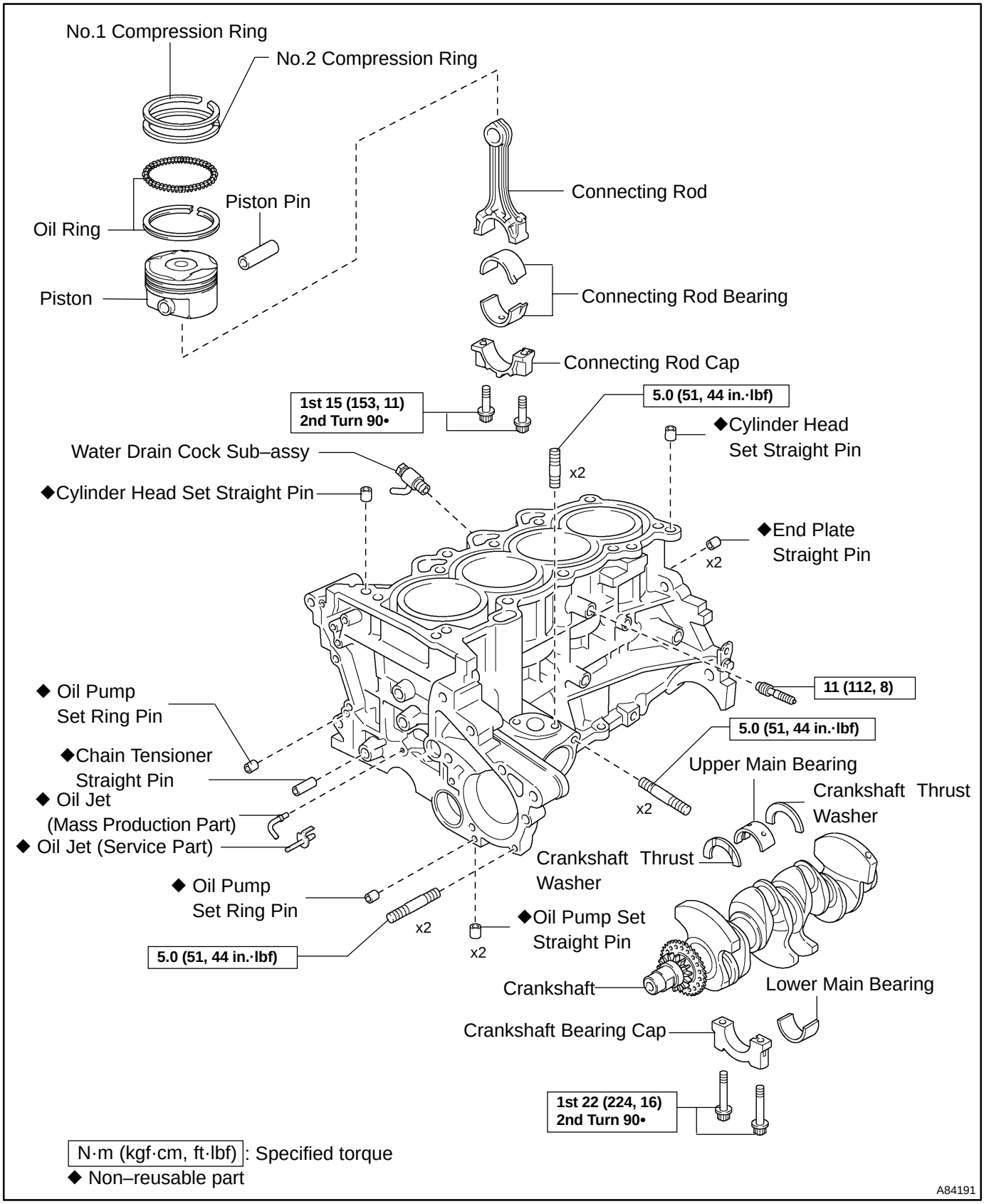

cardiagn.com

OVERHAUL

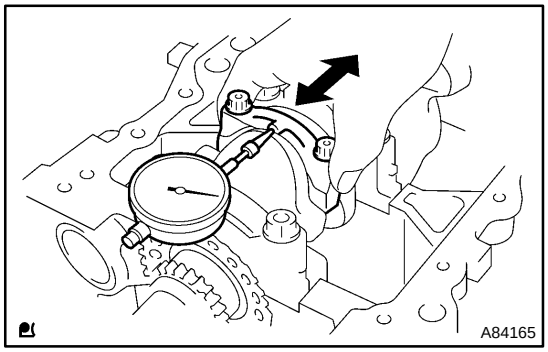

1. INSPECT CONNECTING ROD THRUST CLEARANCE

(a) Using a dial indicator, measure the thrust clearance of the connecting rod while moving the connecting rod back and forth.

Standard thrust clearance:
0.16 to 0.36 mm (0.0063 to 0.0142 in.)
Maximum thrust clearance: 0.36 mm (0.0142 in.)

If the thrust clearance is greater than maximum, replace the connecting rod.

2. INSPECT CONNECTING ROD OIL CLEARANCE

(a) Put the cylinder number on the connecting rod and connecting rod cap with paint.

HINT:
Take step (a) so that the connecting rod and connecting rod cap can be returned to the original locations when reassembling.

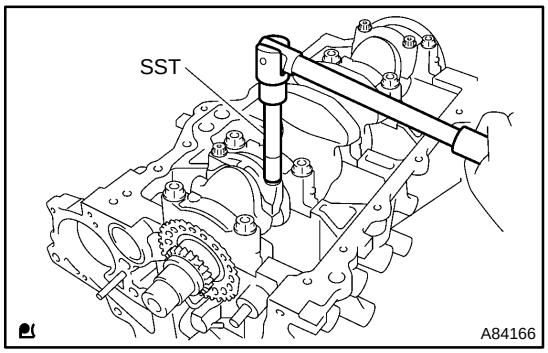

(b) Using SST, remove the 2 bolts.
SST 09205–16010

(c) Remove the connecting rod cap from the connecting rod.

(d) Clean the bearing, connecting rod end and crank pin.

(e) Check that the bearing and crank pin are not excessively worn or scratched.

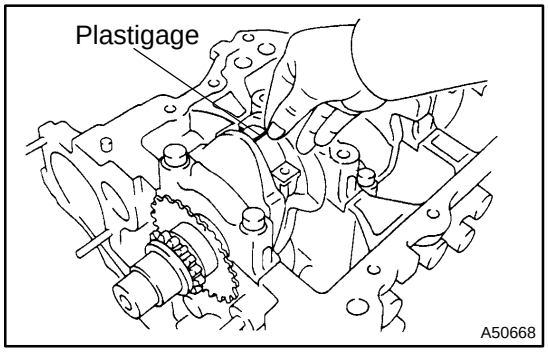

(f) Lay a strip of Plastigage across the crank pin.

cardiagn.com

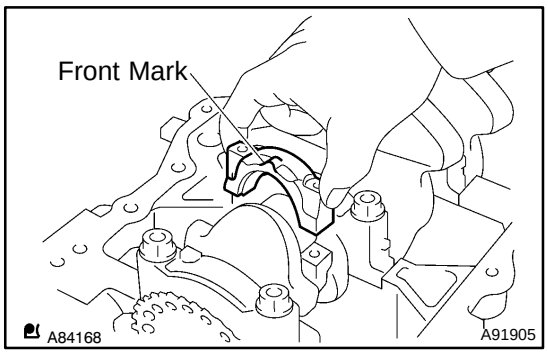

(g) Check the front marks of the connecting rod and connecting rod cap, then install the connecting rod cap to the connecting rod

(h) Apply a light coat of engine oil to the threads and contact surface of the bolts.

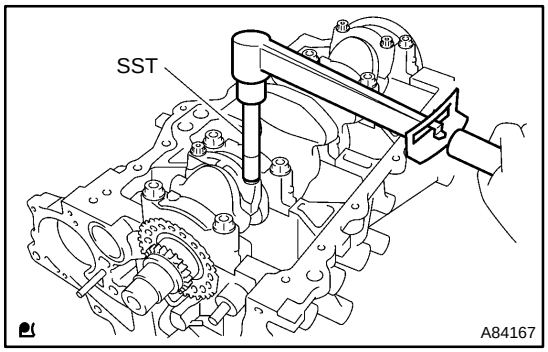

(i) Using SST,temporarily tighten the bolts in several steps, then retighten them with the specified torque.
SST 09205–16010
Torque: 15 N·m (153 kgf·cm, 11 ft·lbf)

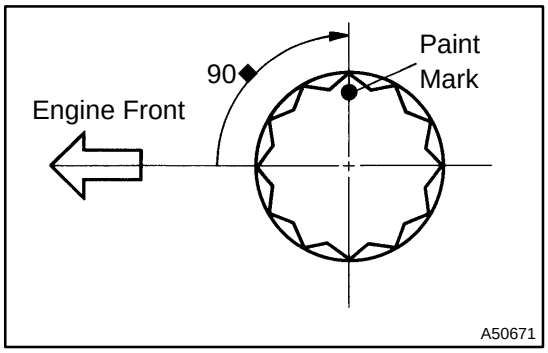

(j) Mark the front of the connecting cap bolts with paint.

(k) Retighten the cap bolts by 90◆as shown in the illustration.

NOTICE:

Do not turn the crankshaft when measuring.

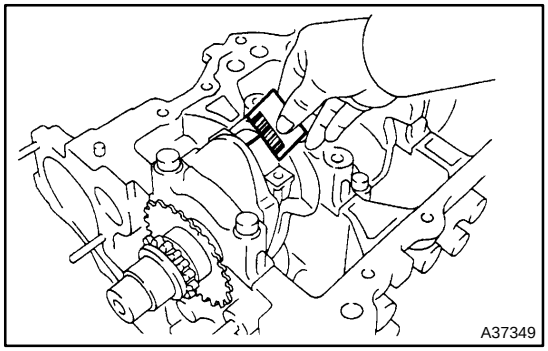

(l) Remove the connecting rod cap, then measure the Plastigage at its widest point.
Standard oil clearance:
0.016 to 0.040 mm (0.0006 to 0.0016 in.)
Maximum oil clearance: 0.06 mm (0.0024 in.)

NOTICE:

Completely remove the Plastigage.

cardiagn.com

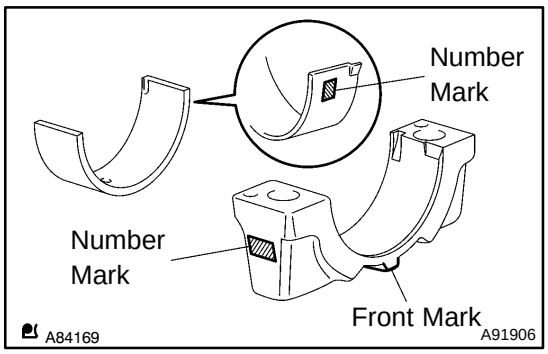

(m) If the width is greater than maximum, select and replace the bearing. If necessary, use the undersize bearing.

HINT:

Number Mark	Connecting Rod External Diameter mm (in.)	Center Bearing Thickness mm (in.)	Oil Clearance mm (in.)
1	43.000 to 43.008 (1.69291 to 1.69323)	1.488 to 1.492 (0.05858 to 0.05874)	0.016 to 0.040 (0.00063 to 0.00157)
2	43.009 to 43.016 (1.69327 to 1.69354)	1.493 to 1.496 (0.05878 to 0.05890)	↑
3	43.017 to 43.024 (1.69358 to 1.69386)	1.497 to 1.500 (0.05894 to 0.05906)	↑
U/S 0.25	43.000 to 43.024 (1.69291 to 1.69386)	1.608 to 1.614 (0.06331 to 0.06354)	↑

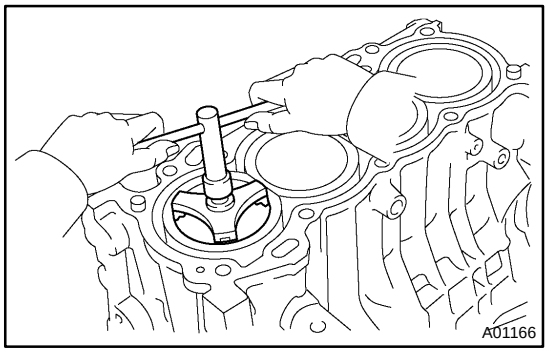

3. REMOVE PISTON SUB–ASSY W/CONNECTING ROD

(a) Using a ridge reamer, remove all the carbon from the top of the cylinder.

(b) Push the piston, connecting rod assembly and upper bearing through the top of the cylinder block.

HINT:

- Keep the bearing, connecting rod and cap together.
- Keep the piston and connecting rod assemblies in the correct order so that they can be returned to the original locations when reassembling.

4. REMOVE CONNECTING ROD BEARING

(a) Remove the connecting rod bearing from the connecting rod cap.

(b) Remove the connecting rod bearing from the connecting rod.

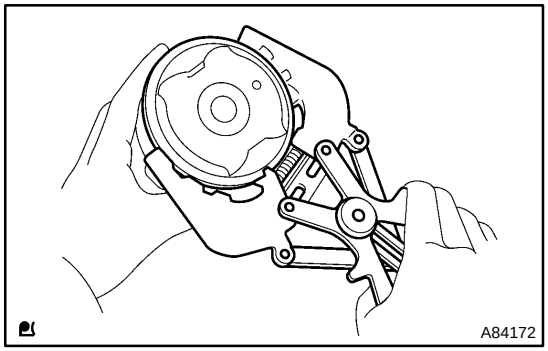

5. REMOVE PISTON RING SET

HINT:

Keep the piston rings in the correct combination and order so that they can be returned to the original locations when reassembling

(a) Using a piston ring expander, remove the compression ring No. 1, No. 2 and oil ring.

cardiagn.com

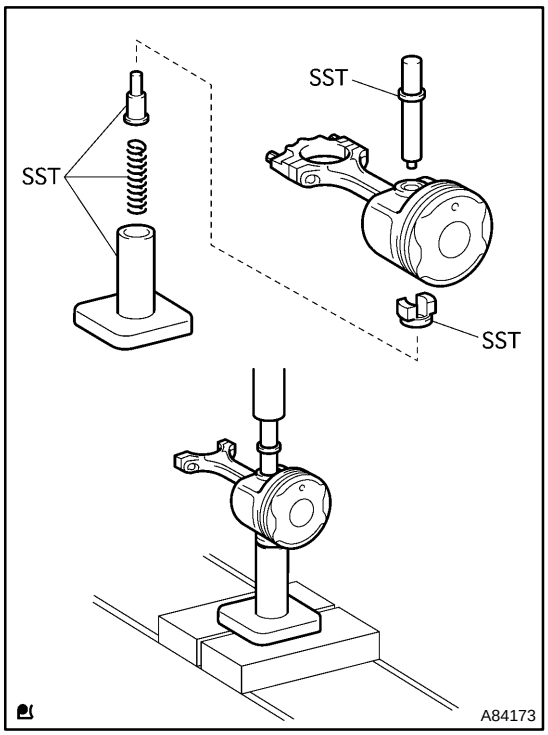

6. REMOVE W/PIN PISTON SUB–ASSY

(a) Using SST and a press, remove the piston pin.
SST 09221–25026 (09221–00021, 09221–00030, 09221–00061, 09221–00090, 09221–00100)

NOTICE:
Do not change the combination of the piston and piston pin so that they can be returned to the original locations when reassembling.

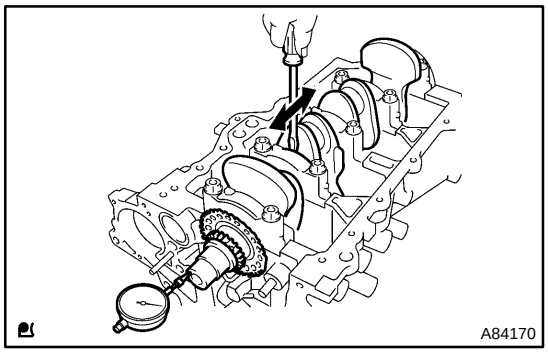

7. INSPECT CRANKSHAFT THRUST CLEARANCE

(a) Using a dial indicator, measure the thrust clearance of the crankshaft while moving a screwdriver back and forth.
Standard thrust clearance:
0.09 to 0.19 mm (0.0035 to 0.0075 in.)
Maximum thrust clearance: 0.30 mm (0.0118 in.)

If the thrust clearance is greater than maximum, replace the thrust washer or crankshaft.
HINT:
Thrust washer thickness is 2.43 to 2.48 mm (0.0957 to 0.0976 in.).

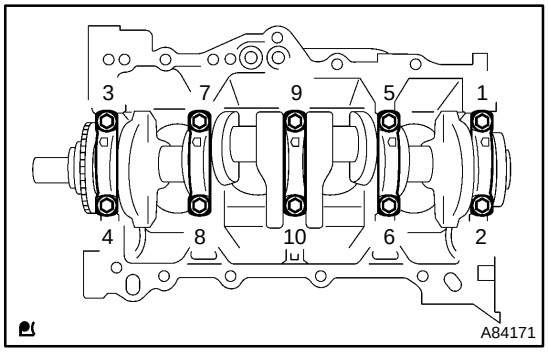

8. REMOVE CRANKSHAFT

(a) Using SST, uniformly loosen the bearing caps in several steps in the sequence shown in the illustration.
SST 09011–38121

(b) Remove the bearing caps and crankshaft.

9. REMOVE CRANKSHAFT THRUST WASHER UPPER

(a) Remove the crankshaft thrust washer upper from the cylinder block.

10. REMOVE CRANKSHAFT BEARING

(a) Remove the crankshaft bearing from the cylinder block.

(b) Remove the crankshaft bearing from the bearing cap.

cardiagn.com

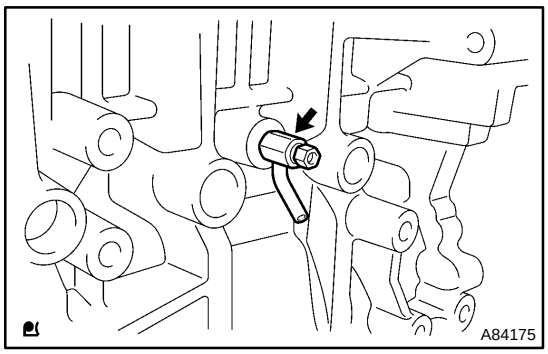

11. REMOVE CYLINDER BLOCK WATER DRAIN COCK PLUG

(a) Remove the cylinder block water drain cock plug from the cylinder block.

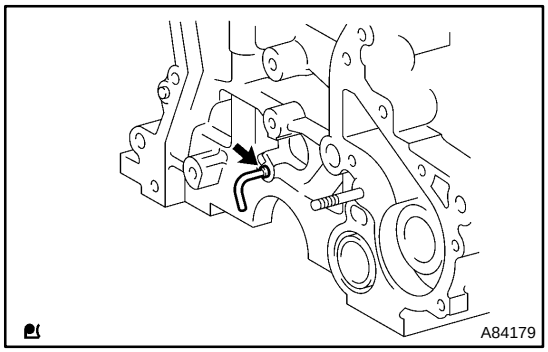

12. REMOVE OIL JET

(a) Remove the oil jet from the cylinder block.

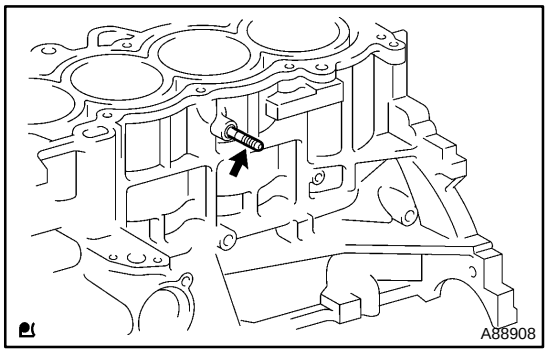

13. REMOVE STUD BOLT (FOR KNOCK SENSOR)

(a) Remove the stud bolt (for knock control sensor) from the cylinder block.

14. REMOVE STUD BOLT

(a) Remove the 6 stud bolts indicated in the illustration from the cylinder block.

Intake Side:

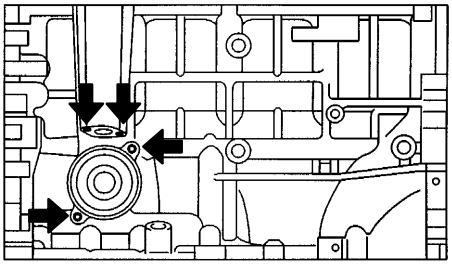

Front Side:

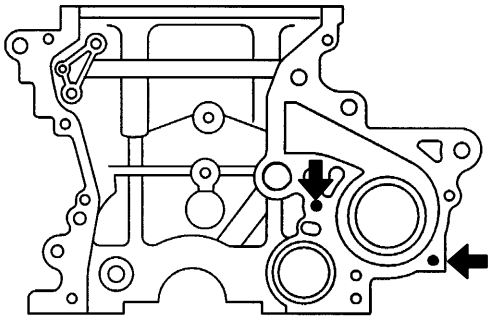

A84192 A92959

cardiagn.com

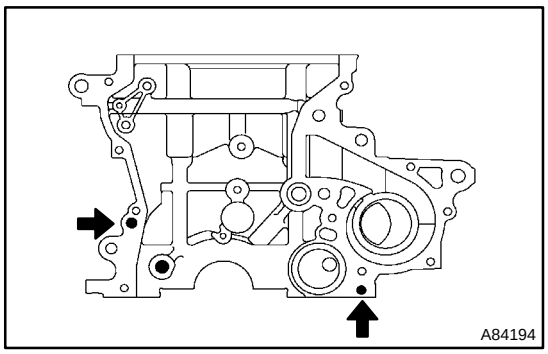

15. REMOVE OIL PUMP SET RING PIN

(a) Remove the 2 oil ring pins indicated in the illustration from the cylinder block

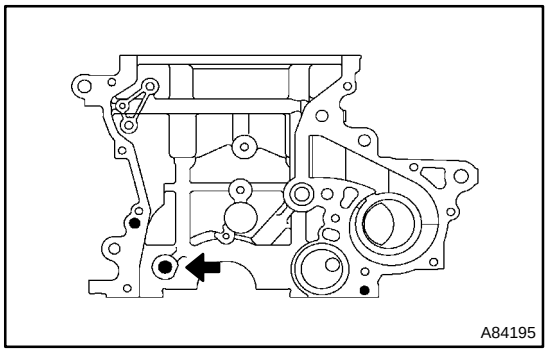

16. REMOVE CHAIN TENSIONER STRAIGHT PIN

(a) Remove the chain tensioner straight pin indicated in the illustration from the cylinder block.

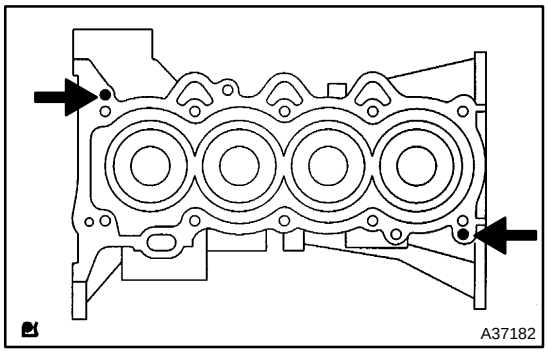

17. REMOVE CYLINDER HEAD SET STRAIGHT PIN

(a) Remove the 2 cylinder straight pins indicated in the illustration from the cylinder block.

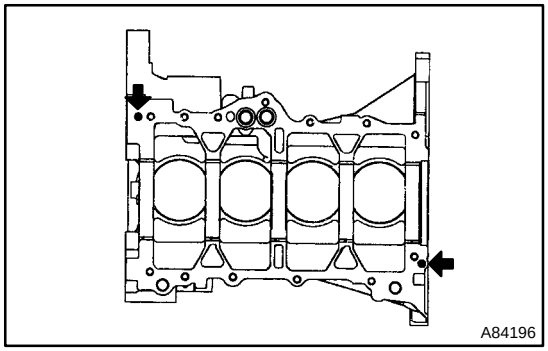

18. REMOVE OIL PAN STRAIGHT PIN

(a) Remove the 2 oil pan straight pins indicated in the illustration from the cylinder block.

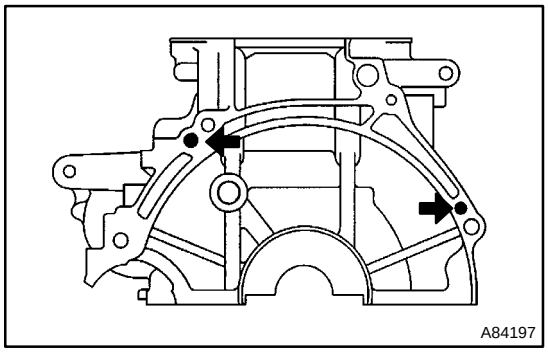

19. REMOVE END PLATE STRAIGHT PIN

(a) Remove the 2 end plate straight pins indicated in the illustration from the cylinder block.

cardiagn.com

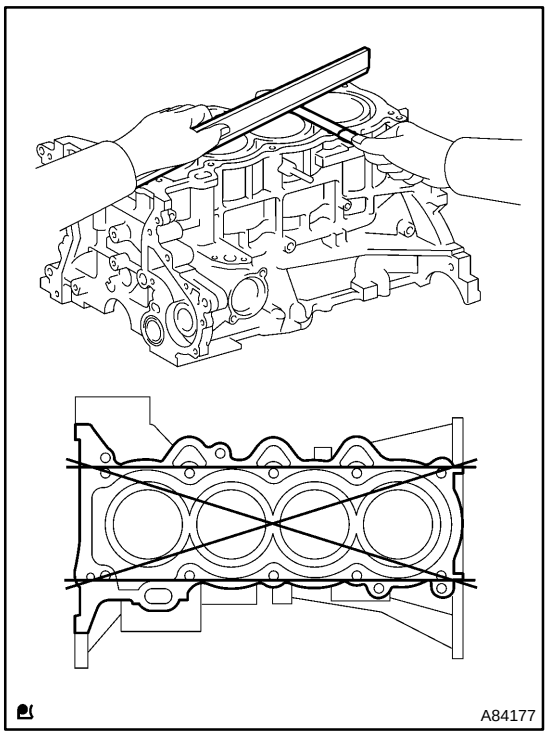

20. INSPECT CYLINDER BLOCK FOR FLATNESS

(a) Using a precision straight edge and feeler gauge, measure the warpage on the top surface of the cylinder block.
Maximum warpage: 0.05 mm (0.0020 in.)

If the warpage is greater than maximum, replace the cylinder block.

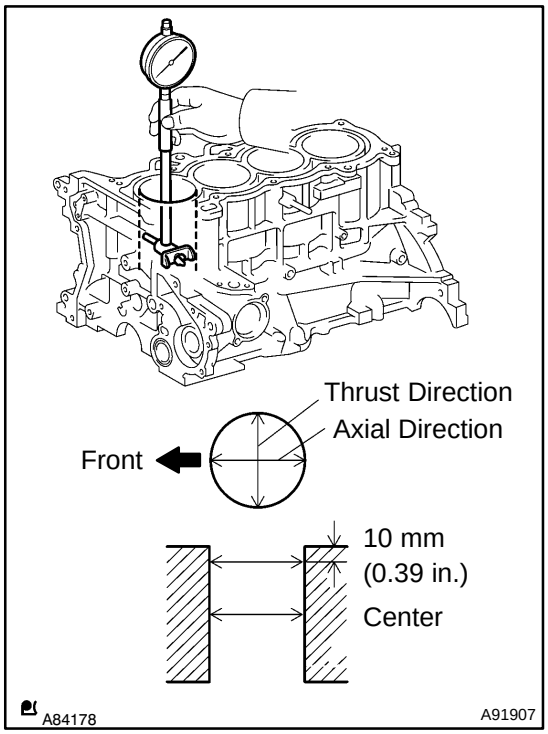

21. INSPECT CYLINDER BORE

(a) Using a cylinder gauge, measure the bore diameter at the 4 positions as illustrated.
Calculate the average of the thrust direction measurement and axial direction measurement at each level.
Standard diameter:
75.000 to 75.133 mm (2.9528 to 2.9580 in.)

If either of the 2 average values is greater than maximum, replace the cylinder block.

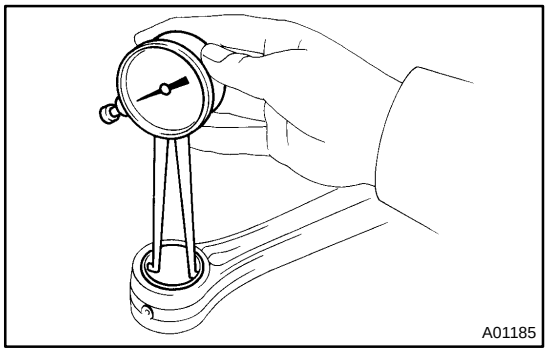

22. INSPECT CONNECTING ROD SUB–ASSY

(a) Using a caliper gauge, measure the internal diameter of the connecting rod.
Connecting rod inside diameter:
17.965 to 17.985 mm (0.7073 to 0.7081 in.)

If the diameter is greater than maximum, replace the connecting rod.

cardiagn.com

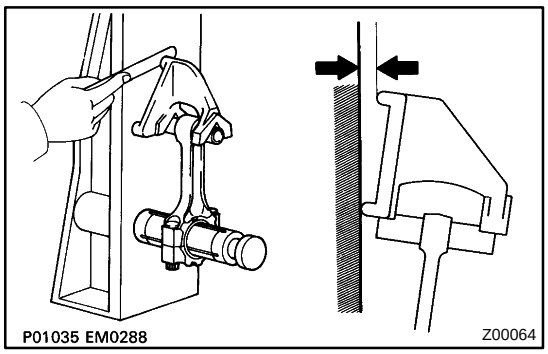

(b) Using a rod aligner and feeler gauge, check the connecting rod alignment.

(1) Check the misalignment.

Maximum misalignment:

0.05 mm (0.0020 in.) per 100 mm (3.94 in.)

If the misalignment is greater than maximum, replace the connecting rod assembly.

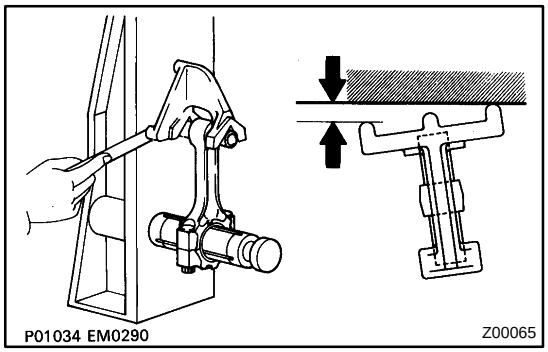

(2) Check the twist.

Maximum twist:

0.05 mm (0.0020 in.) per 100 mm (3.94 in.)

If the twist is greater than maximum, replace the connecting rod assembly.

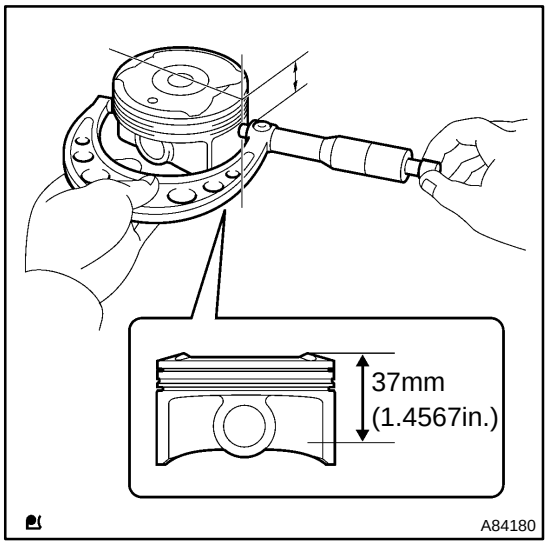

23. INSPECT W/PIN PISTON SUB–ASSY

(a) Using a micrometer, measure the diameter of the piston. Align the micrometer so it is 37 mm (1.4567 in.) from the top of the piston and at a right angle (90◆) to the piston pin holes.

Piston diameter:

74.941 to 74.979 mm (2.9504 to 2.9519 in.)

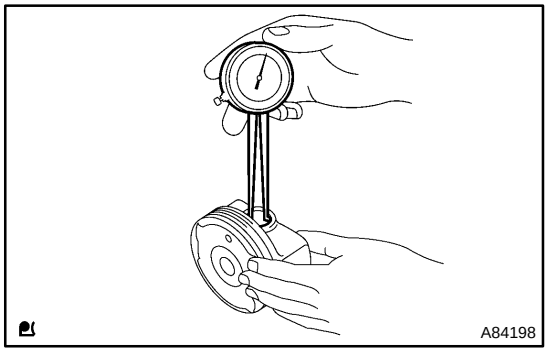

(b) Using a caliper gauge, measure the internal diameter of the piston pin hole.

Piston pin hole diameter at 20◆C (68◆F):

18.013 to 18.016 mm (0.7092 to 0.7093 in.)

cardiagn.com

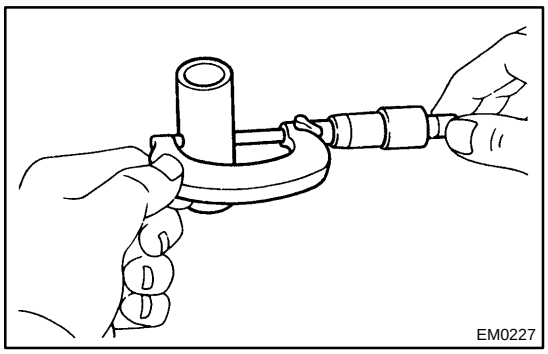

(c) Using a micrometer, measure the external diameter of the piston pin.
Piston pin diameter:
18.001 to 18.004 mm (0.7087 to 0.7088 in.)

NOTICE:
Do not change the combination of the piston and piston pin so that they can be returned to the original locations when reassembling.

(d) Subtract the piston pin diameter measurement from the piston pin hole diameter measurement to calculate the oil clearance.
Standard oil clearance:
0.009 to 0.015 mm (0.0004 to 0.0006 in.)
Maximum oil clearance:
0.050 mm (0.0020 in.)

If the oil clearance is greater than maximum, replace the piston with pin.

24. INSPECT PISTON CLEARANCE

(a) Subtract the piston pin hole diameter measurement from the cylinder bore minimum diameter measurement to calculate the piston clearance.
Standard oil clearance: 0.045 to 0.068 mm (0.0018 to 0.0027 in.)
Maximum oil clearance: 0.08 mm (0.0032 in.)

If the piston clearance is greater than maximum, replace the piston or cylinder block.

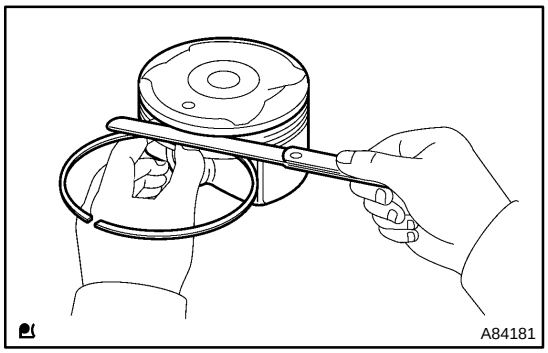

25. INSPECT RING GROOVE CLEARANCE

(a) Using a feeler gauge, measure the clearance between the piston ring and ring groove all around the piston.
Standard ring groove clearance:

Ring	Standard mm (in.)
No.1	0.02 to 0.07 (0.0008 to 0.0028)
No.2	0.02 to 0.06 (0.0008 to 0.0024)
Oil	0.02 to 0.06 (0.0008 to 0.0024)

If the clearance is not as specified, replace the piston.

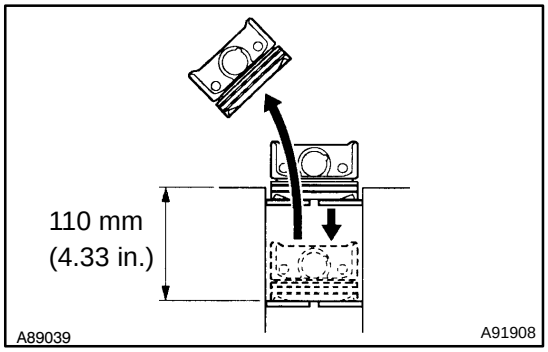

26. INSPECT PISTON RING END GAP

(a) Using the piston, push the piston ring until it is 110 mm (4.33 in.)from the top of the cylinder block.

cardiagn.com

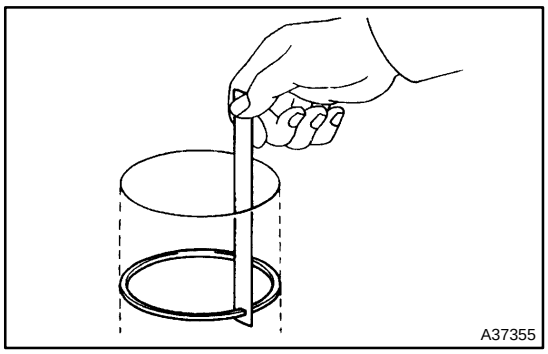

(b) Using a feeler gauge, measure the end gap.
Standard end gap:

Ring	Standard mm (in.)	Maximum mm (in.)
No.1	0.20 to 0.30 (0.0079 to 0.0118)	0.61 (0.0240)
No.2	0.30 to 0.45 (0.0118 to 0.0177)	1.20 (0.0472)
Oil	0.10 to 0.40 (0.0039 to 0.0158)	1.15 (0.0453)

If the end gap is greater than maximum, replace the piston ring and oil ring.

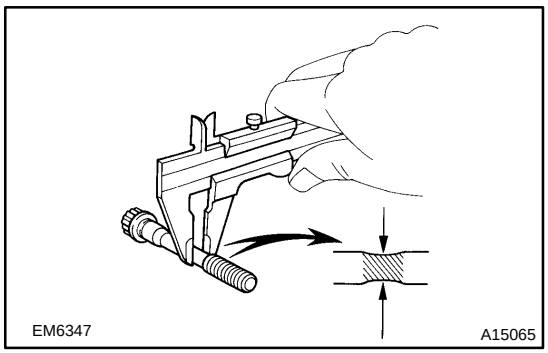

27. INSPECT CONNECTING ROD BOLT

(a) Using vernier calipers, measure the diameter at the position as illustrated.
Standard diameter:
6.6 to 6.7 mm (0.260 to 0.264 in.)
Maximum diameter: 6.4 mm (0.252 in.)

If the diameter is less than minimum, replace the connecting rod bolt.

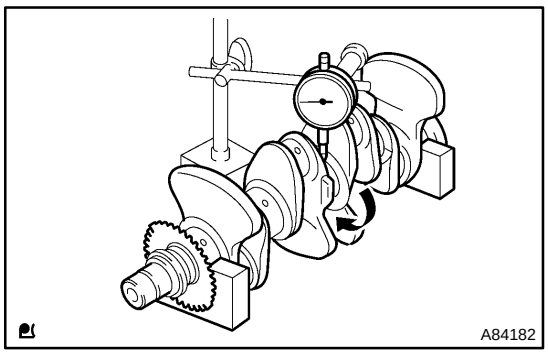

28. INSPECT CRANKSHAFT

(a) Inspect the circle runout.
(1) Using a dial indicator and V–blocks, measure the circle runout of the crankshaft.
Maximum circle runout: 0.03 mm (0.0012 in.)

If the circle runout is greater than maximum, replace the crankshaft.

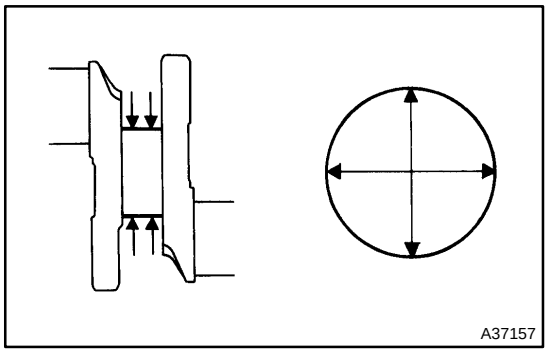

(b) Inspect the diameter.
(1) Using a micrometer, measure the diameter of each main journal as illustrated.
Diameter: 45.988 to 46.000 mm (1.8106 to 1.8110 in.)
(2) Calculate the taper and out–of–roundness of the main journal.
Maximum taper and out–of–round:
0.02 mm (0.0008 in.)

If the taper and out–of–roundness are greater than maximum, replace the crankshaft.

cardiagn.com

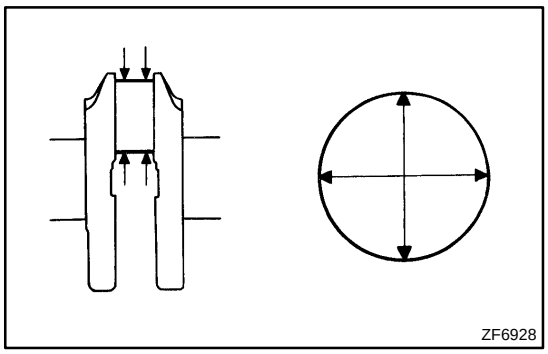

(3) Using a micrometer, measure the diameter of each crank pin as illustrated.

Diameter: 39.992 to 40.000 mm (1.5745 to 1.5748 in.)

(4) Calculate the taper and out–of–roundness of the crank pin.

Maximum taper and out–of–round:
0.02 mm (0.0008 in.)

If the taper and out–of–roundness are greater than maximum, replace the crankshaft.

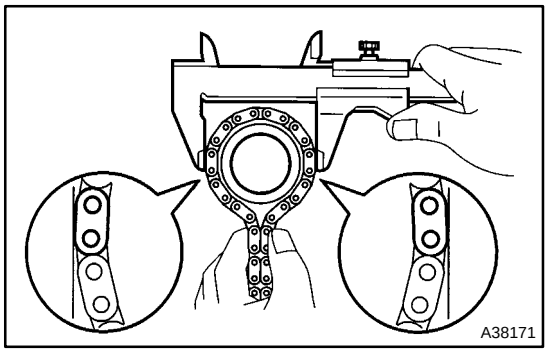

(5) Wrap the chain around the timing sprocket.
Using vernier calipers, measure the diameter of the timing sprocket with the chain wrapped.

Standard sprocket diameter (w/ chain):
51.72 mm (2.0362 in.)
Maximum sprocket diameter (w/ chain):
50.5 mm (1.988 in.)

NOTICE:
When measuring the diameter, vernier calipers must contact the chain roller.

If the diameter is less than minimum, replace the chain and crankshaft.

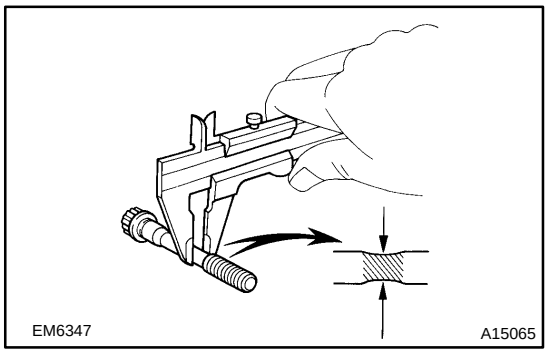

29. INSPECT CRANKSHAFT BEARING CAP SET BOLT

(a) Using vernier calipers, measure the diameter at the position as illustrated.

Standard diameter: 7.3 to 7.5 mm (0.287 to 0.295 in.)
Minimum diameter: 7.3 mm (0.287 in.)

If the diameter is less than minimum, replace the crank bearing cap bolt.

cardiagn.com

30. INSPECT CRANKSHAFT OIL CLEARANCE

(a) Clean the main journal and bearing

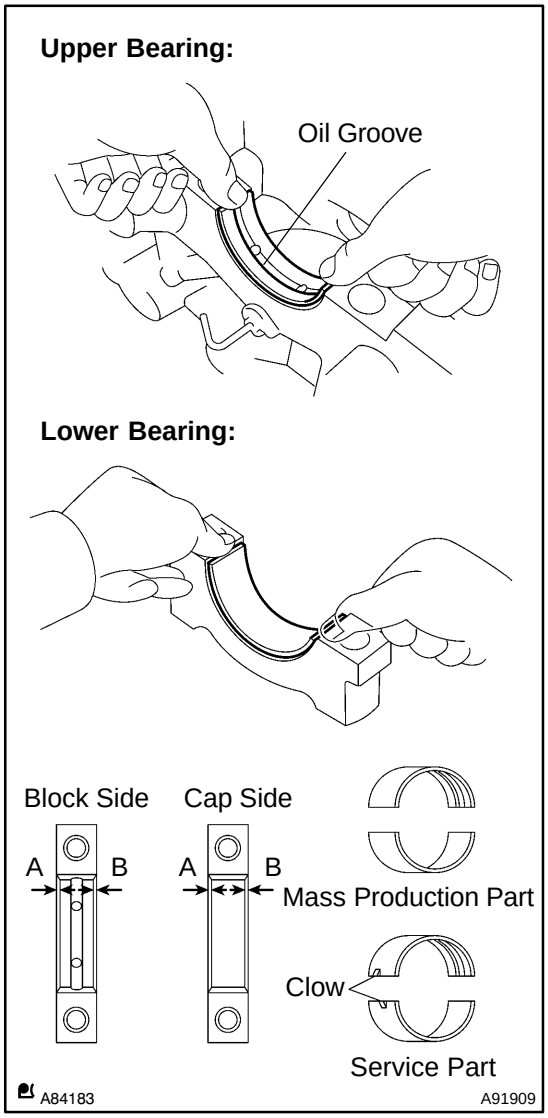

(b) Install the upper bearing with the oil groove to the cylinder block, the lower bearing to the bearing cap.

NOTICE:

Do not apply engine oil to the contact surface of the cylinder block and the backside of the bearing.

HINT:

The mass production parts do not have claws as marks. If reusing the mass production part, measure the clearance of the both sides so that the bearing comes in the center of the bearing cap.

Specified clearance:

A – B = within 0.8 mm (0.032 in.)

(c) Install the crankshaft to the cylinder block.

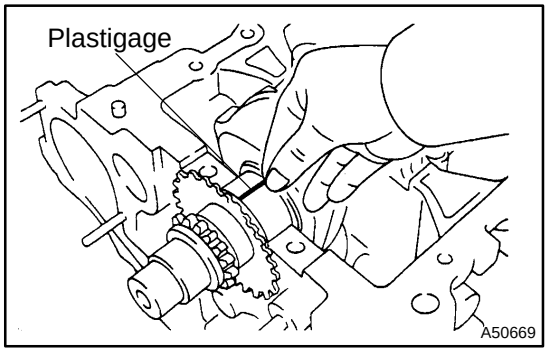

(d) Lay a strip of Plastigage across the crankshaft journal.

cardiagn.com

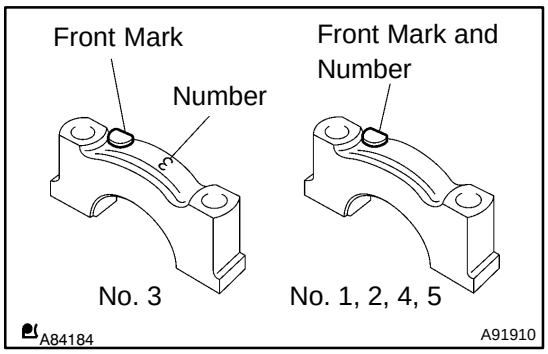

(e) Check the front marks and imprinted numbers on the bearing cap, then install the bearing cap to the cylinder block.

(f) Apply a light coat of engine oil to the threads and contact surface of the bolt.

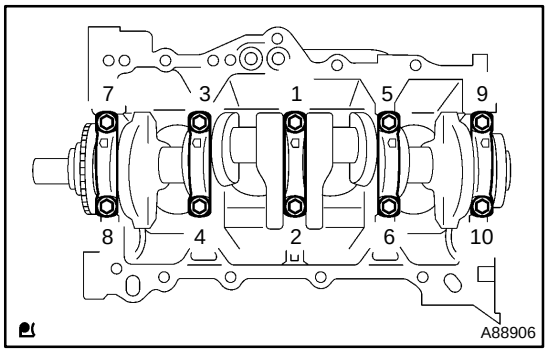

(g) Using SST, temporarily tighten the bolts in several steps in the sequence shown in the illustration, then tighten the bolts with the specified torque.
SST 09011–38121
Torque: 22 N·m (224 kgf·cm, 16 ft·lbf)

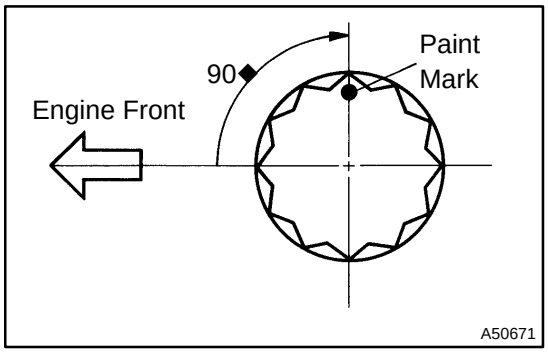

(h) Mark the front of the bearing cap bolts with paint.

(i) Retighten the bearing cap bolts by 90◆in the same sequence as step (g).

(j) Check that each paint mark is now at the 90◆angle to the front.

NOTICE:
Do not turn the crankshaft when measuring.

cardiagn.com

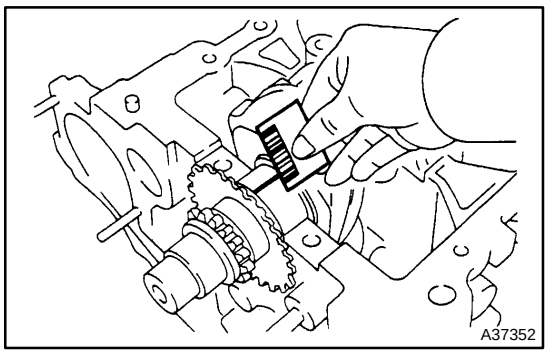

(k) Remove the bearing cap, then measure the Plastigage at its widest point.
Standard oil clearance:
0.010 to 0.023 mm (0.0004 to 0.0009 in.)
Maximum oil clearance: 0.07 mm (0.0028 in.)

NOTICE:
Completely remove the Plastigage.

HINT:
- If the width is greater than maximum, select and replace the bearing. If necessary, use the undersize bearing.
- To select the correct bearing size, calculate the bearing number by adding together the numbers imprinted on the cylinder block and crank journal.
- Example:
  Imprinted number on the cylinder block is 3.
  Imprinted number on the crank journal is 5.
  3+5=8
  Select the bearing with the bearing number 3.

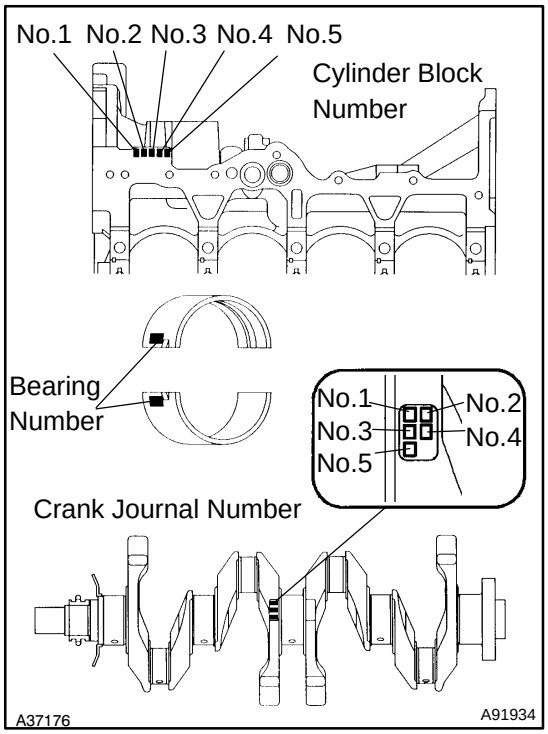

Number	Cylinder Block Number mm (in.)	Crank Journal Number mm (in.)
0	50.000 to 50.003 (1.96850 to 1.96862)	46.000 to 46.001 (1.81102 to 1.81106)
1	50.003 to 50.005 (1.96862 to 1.96870)	46.002 to 46.003 (1.81110 to 1.81114)
2	50.005 to 50.007 (1.96870 to 1.96878)	46.004 to 46.005 (1.81118 to 1.81122)
3	50.007 to 50.010 (1.96878 to 1.96890)	46.006 to 46.007 (1.81126 to 1.81130)
4	50.010 to 50.012 (1.96890 to 1.96898)	46.008 to 46.009 (1.81134 to 1.81138)
5	50.012 to 50.014 (1.96898 to 1.96906)	46.010 to 46.011 (1.81142 to 1.81146)
6	50.014 to 50.016 (1.96906 to 1.96913)	–

Cylinder Block Number + Crank Journal Number	Bearing Number	Center Bearing Thickness mm (in.)	Oil Clearance mm (in.)
0 2	1	1.992 to 1.995 (0.07843 to 0.07854)	0.010 to 0.023 (0.00039 to 0.00091)
3 5	2	1.996 to 1.998 (0.07858 to 0.07866)	↑
6 8	3	1.999 to 2.001 (0.07870 to 0.07878)	↑
9 11	4	2.002 to 2.004 (0.07882 to 0.07890)	↑
	U/S 0.25	2.111 to 2.117 (0.08311 to 0.08335)	↑

cardiagn.com

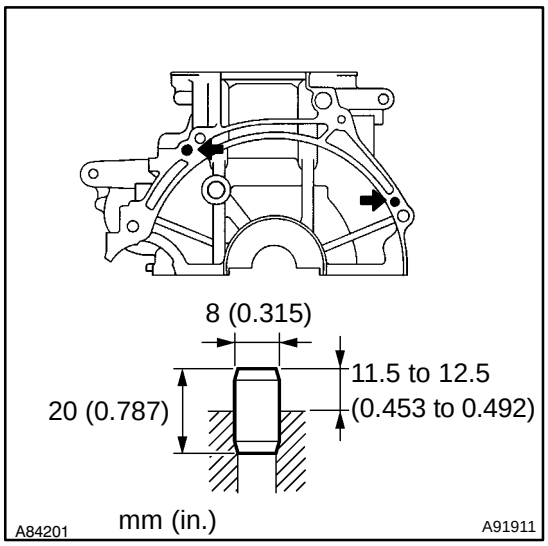

31. INSTALL END PLATE STRAIGHT PIN

(a) Using a plastic–faced hammer, tap in a new end plate straight pin.
Standard protrusion:
11.5 to 12.5 mm (0.453 to 0.492 in.)

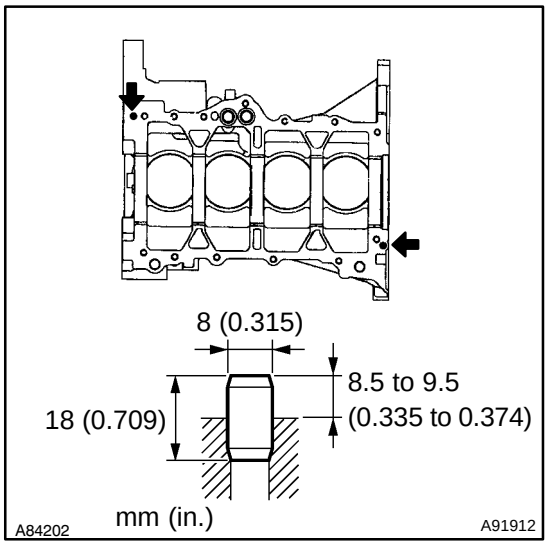

32. INSTALL OIL PAN STRAIGHT PIN

(a) Using a plastic–faced hammer, tap in a new oil pan straight pin.
Standard protrusion:
8.5 to 9.5 mm (0.335 to 0.374 in.)

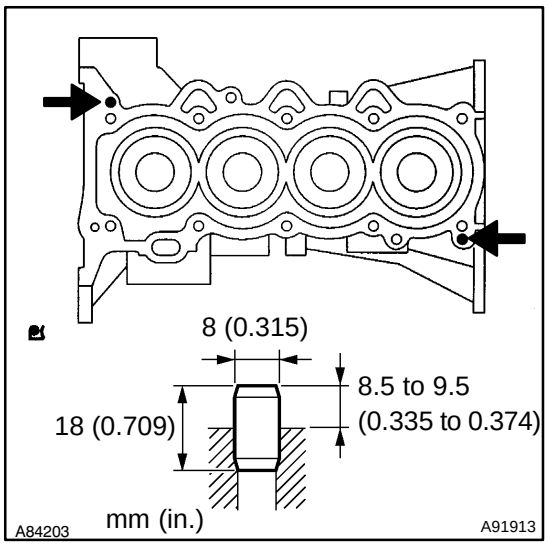

33. INSTALL CYLINDER HEAD SET STRAIGHT PIN

(a) Using a plastic–faced hemmer, tap in a new cylinder head straight pin.
Standard protrusion:
8.5 to 9.5 mm (0.335 to 0.374 in.)

cardiagn.com

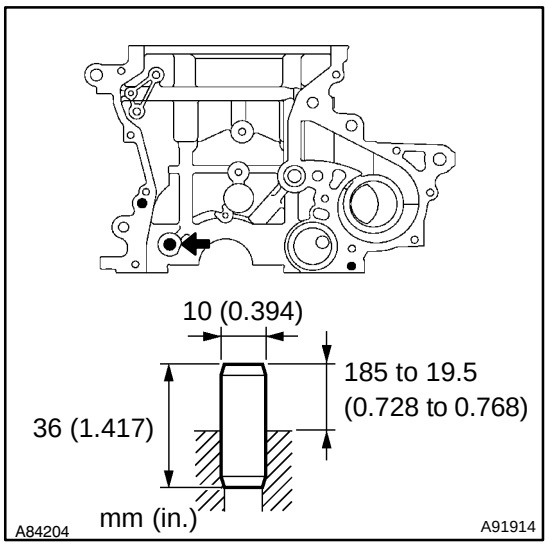

34. INSTALL CHAIN TENSIONER STRAIGHT PIN

(a) Using a plastic–faced hammer, tap in a new chain tensioner straight pin.
Standard protrusion:
18.5 to 19.5 mm (0.728 to 0.768 in.)

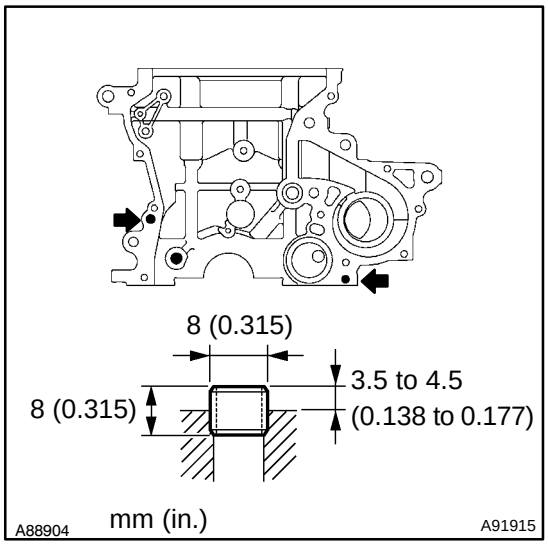

35. INSTALL OIL PUMP SET RING PIN

(a) Using a plastic–faced hammer, tap in a new oil pump ring pin.
Standard protrusion:
3.5 to 4.5 mm (0.138 to 0.177 in.)

36. INSTALL STUD BOLT

(a) Install the 6 stud bolts in the positions shown in the illustration.
Torque: 5.0 N·m (51 kgf·cm, 44 in.·lbf)

NOTICE:
In the illustration below, the bottom of the stud bolt contacts the cylinder block.

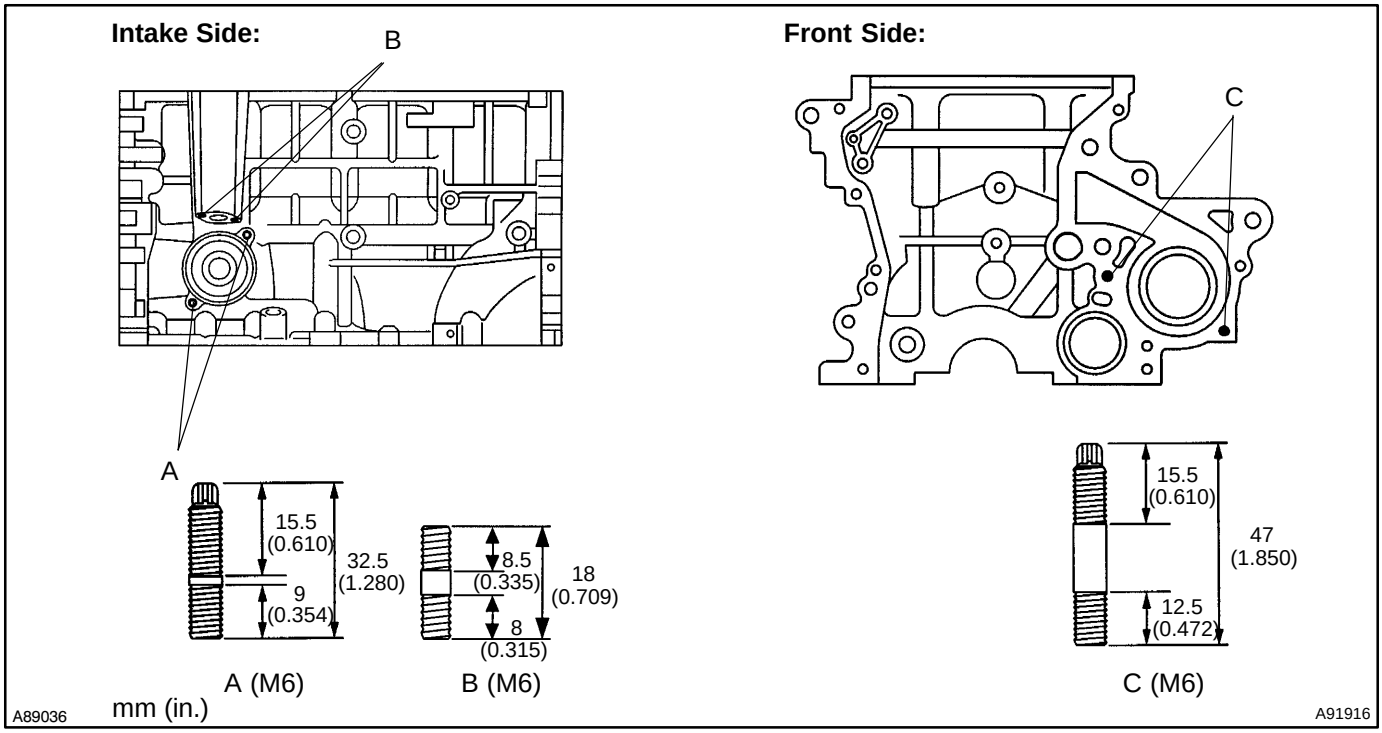

cardiagn.com

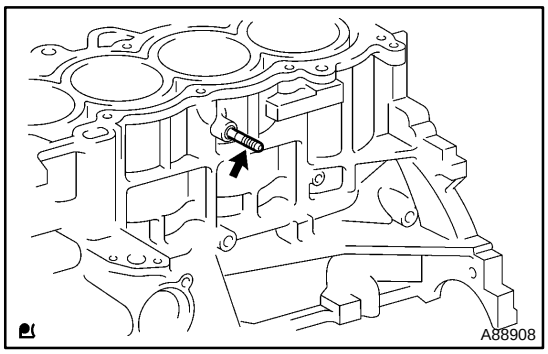

37. INSTALL STUD BOLT (FOR KNOCK SENSOR)

(a) Install the stud bolt (for knock control sensor) to the cylinder block.
Torque: 11 N·m (112 kgf·cm, 8 ft.·lbf)

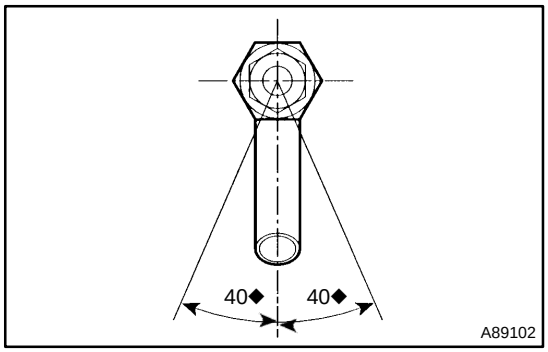

38. INSTALL CYLINDER BLOCK WATER DRAIN COCK PLUG

(a) Apply adhesive to the threads of the drain cock.
Adhesive:
Part No. 08833–00080, THREE BOND 1344, LOCTITE 242 or equivalent

(b) After applying the specified torque, retighten the drain cock by within 1 revolution so the pipe of the drain cock faces downward.
Torque: 35 N·m (357 kgf·cm, 26 ft·lbf)

NOTICE:

- **Install the drain cock within 3 minutes after applying the adhesive.**
- **Do no expose the drain cock to coolant within 1 hour of installation.**
- **Do not retighten the drain cock more than 1 revolution in step (b). Never loosen it once the drain cock is retightened.**
- **The pipe of the drain cock should be within 40◆of either side.**

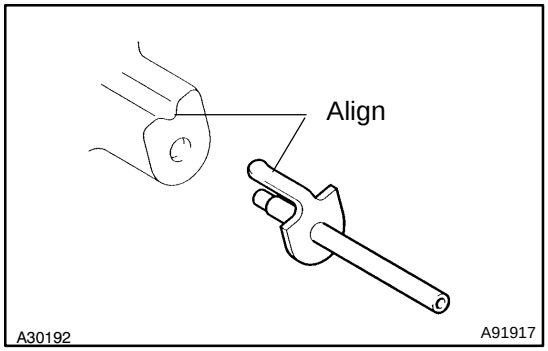

39. INSTALL OIL JET

(a) Align the concave of the cylinder block with the bracket of the oil jet, then tap in the oil jet (the service part).

NOTICE:

Do not tap the tip of the oil jet.

cardiagn.com

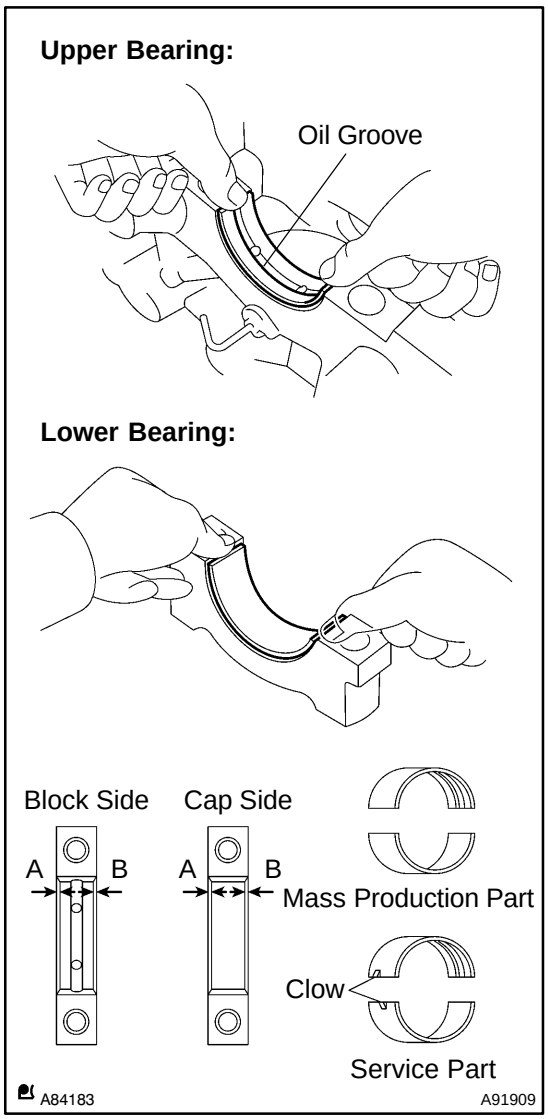

40. INSTALL CRANKSHAFT

(a) Install the upper bearing with the oil groove to the cylinder block, the lower bearing to the bearing cap.

NOTICE:

Do not apply engine oil to the contact surface of the cylinder block and the backside of the bearing.

HINT:

The mass production parts do not have claws as marks. If reusing the mass production part, measure the clearance of the both sides so that the bearing comes in the center of the bearing cap.

Specified clearance:

A – B = within 0.8 mm (0.032 in.)

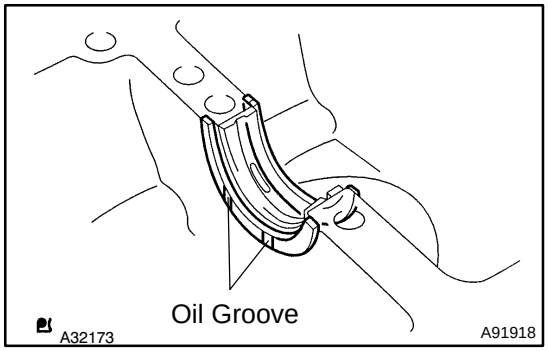

(b) Install the thrust washer to the cylinder block and the front and backside of the bearing cap No. 3 with the oil groove facing outward.

(c) Apply oil to the upper bearing, then install the crankshaft to the cylinder block.

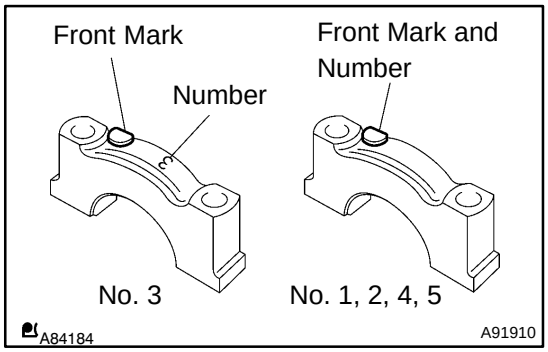

(d) Check the front marks and numbers on the bearing caps, then install the bearing caps to the cylinder block.

(e) Apply a light coat of engine oil to the bearing of the bearing cap sub–assembly, the thread and contact surface of the bolt.

cardiagn.com

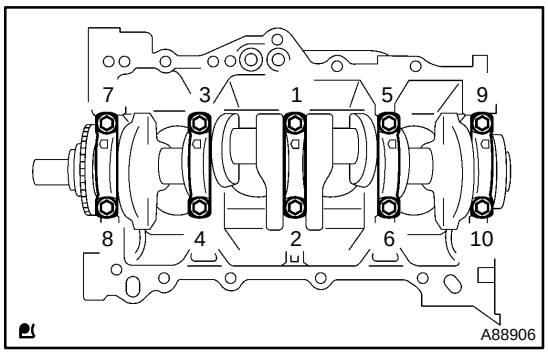

(f) Using SST, temporarily tighten the bolts in several steps in the sequence shown in the illustration, then tighten the bolts with the specified torque.
SST 09011–38121
Torque: 22 N·m (224 kgf·cm, 16 ft·lbf)

NOTICE:
Check that the crankshaft turns smoothly while tightening the bolts.

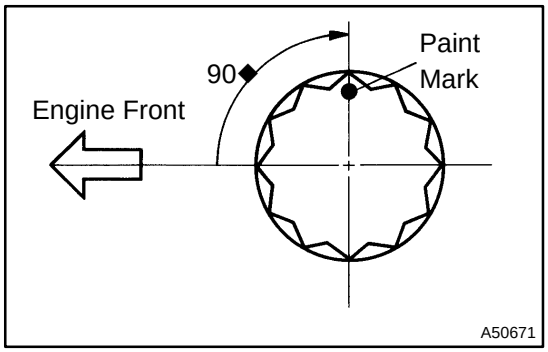

(g) Mark the front of the bearing cap bolts with paint.
(h) Retighten the bearing cap bolts by 90◆in the same sequence as step (f).
(i) Check that each paint mark is now at the 90◆angle to the front.

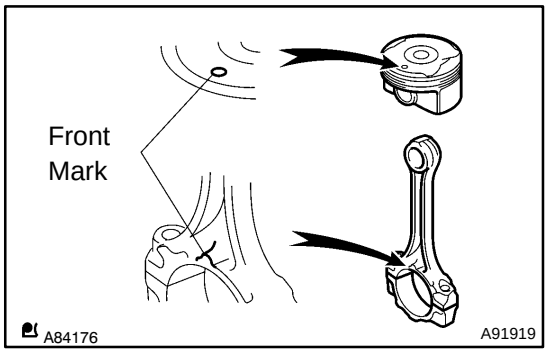

41. INSTALL W/PIN PISTON SUB–ASSY

(a) Apply engine oil to the piston pin and the inside surface of the connecting rod.
(b) Align the front marks of the piston and connecting rod cap.

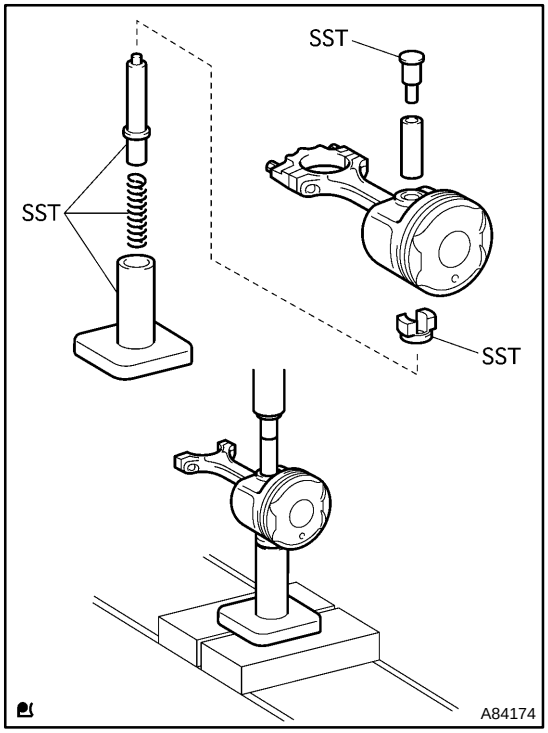

(c) Using SST and a press, press into the piston pin.
SST 09221–25026 (09221–00021, 09221–00030, 09221–00061, 09221–00090, 09221–00100)

NOTICE:
Do not change the combination of the piston and piston pin so that they can be returned to the original locations when reassembling.

cardiagn.com

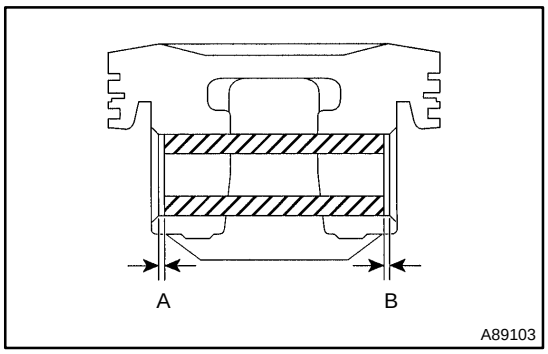

(d) Check the piston pin position.
Specified clearance:
A – B = ± 0.5 mm (0.0197 in.)

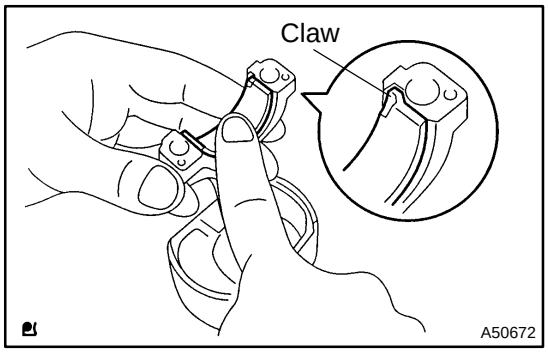

42. INSTALL CONNECTING ROD BEARING

(a) Align the bearing claws and oil grooves, then install the bearing to the connecting rod.

NOTICE:

Do not apply engine oil to the contact surface of the connecting rod and connecting rod cap and the backside of the bearing.

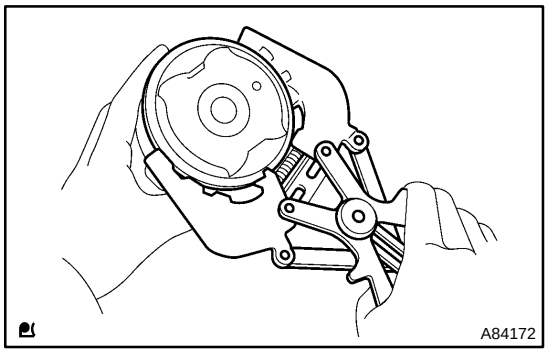

43. INSTALL PISTON RING SET

If reusing the piston rings, install them in the same combination with the surfaces facing correctly.

(a) Using a piston pin expander, install the compression ring and oil ring.

Part	Paint Color	Code Mark
Compression Ring No. 1	Red	1R
Compression Ring No. 2	Blue	2R
Oil Ring	—	—

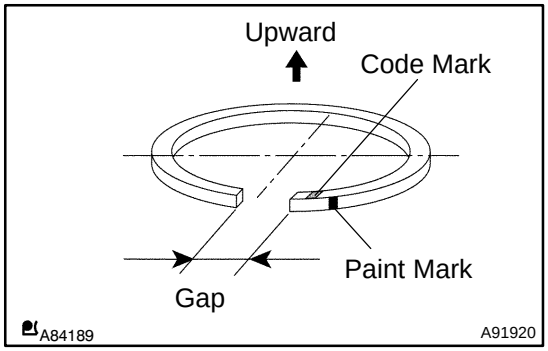

(b) Adjust the piston ring so that its gap is located as illustrated.

44. INSTALL PISTON SUB–ASSY W/CONNECTING ROD

(a) Apply engine oil to the cylinder walls, pistons and surfaces of the connecting rod bearings.

(b) Check that the gap of the piston ring is located correctly.

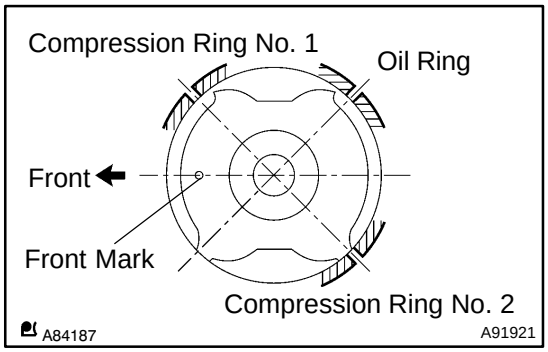

cardiagn.com

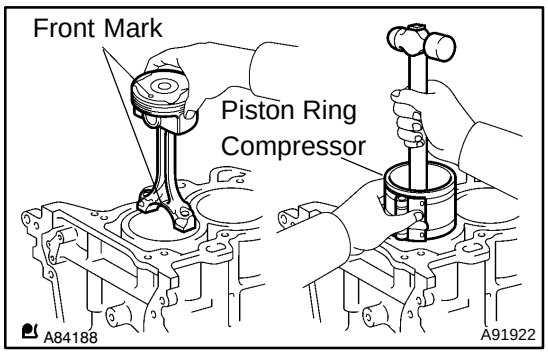

(c) Check the front marks. Using a piston ring compressor, install the piston with connecting rod.

NOTICE:

- **Do not apply engine oil to the contact surface of the connecting rod cap and the backside of the bearing.**
- **The connecting rod and its cap should be in the same combination as they were assembled.**

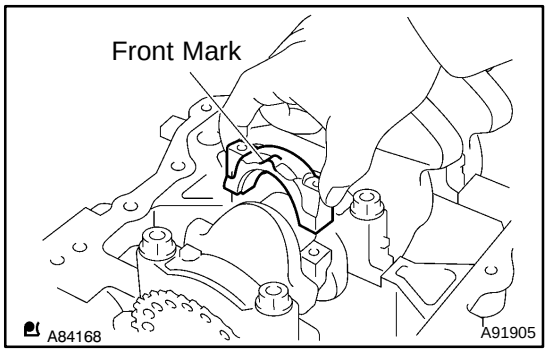

(d) Check that the connecting rod and its cap are in the correct combination and that the front marks are facing correctly, then install the connecting rod cap to the connecting rod.

(e) Apply a light coat of engine oil to the threads and contact surface of the bolts.

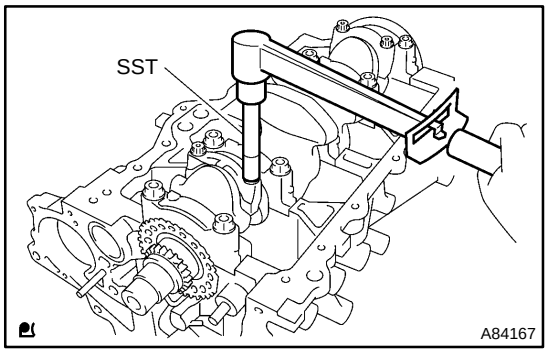

(f) Using SST, temporarily tighten the bolts in several steps, then tighten the bolts with the specified torque.
SST 09205–16010
Torque: 15 N·m (153 kgf·cm, 11 ft·lbf)

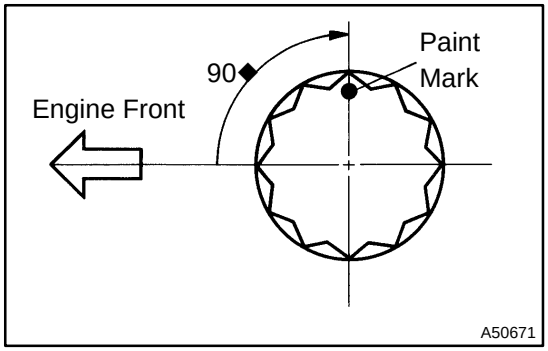

(g) Mark the front of the bolts with paint.

(h) Retighten the bolts by additional 90◆.

(i) Check that the crankshaft turns smoothly.

cardiagn.com