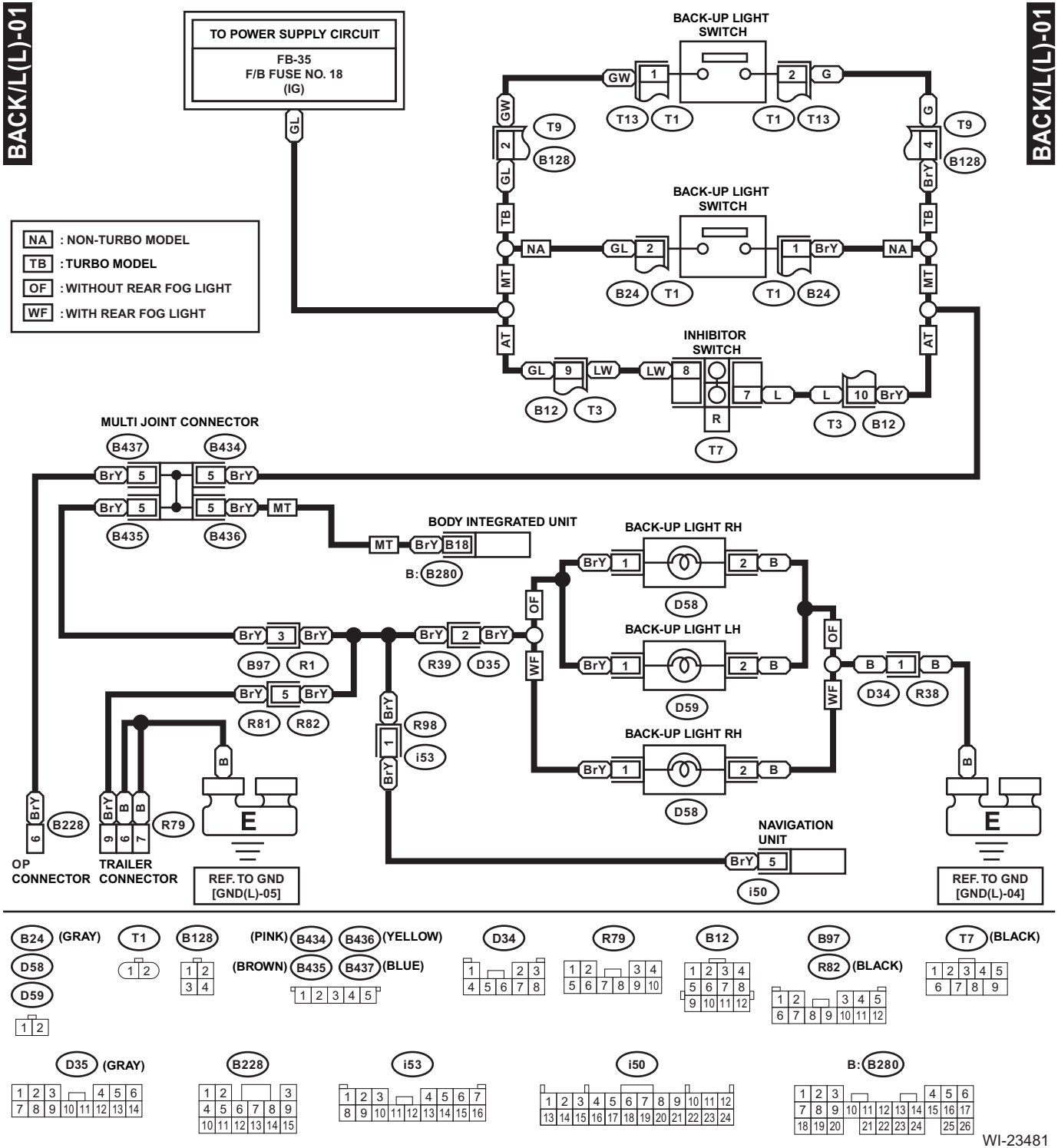
BACK/L(L)-01
BACK/L(L)-01
TO POWER SUPPLY CIRCUIT
FB-35
F/B FUSE NO. 18
(IG)
NA : NON-TURBO MODEL
TB : TURBO MODEL
OF : WITHOUT REAR FOG LIGHT
WF : WITH REAR FOG LIGHT
BACK-UP LIGHT SWITCH
BACK-UP LIGHT SWITCH
INHIBITOR SWITCH
MULTI JOINT CONNECTOR
BODY INTEGRATED UNIT
BACK-UP LIGHT RH
BACK-UP LIGHT LH
BACK-UP LIGHT RH
NAVIGATION UNIT
OP CONNECTOR
TRAILER CONNECTOR
REF. TO GND [GND(L)-05]
REF. TO GND [GND(L)-04]
B24 (GRAY)
D58
D59
T1
B128
(PINK) B434
(BROWN) B435
B436 (YELLOW)
B437 (BLUE)
D34
R79
B12
B97
R82 (BLACK)
T7 (BLACK)
D35 (GRAY)
B228
i53
i50
B: B280
WI-23481