IDENTIFICATION

ID

Page
1. Identification 2

1. Identification

A: IDENTIFICATION

1. IDENTIFICATION NUMBER & LABEL LOCATIONS

The V.I.N. (Vehicle Identification Numbers) is used to classify the vehicle.

- **POSITIONING OF THE LABEL FOR IDENTIFICATION**

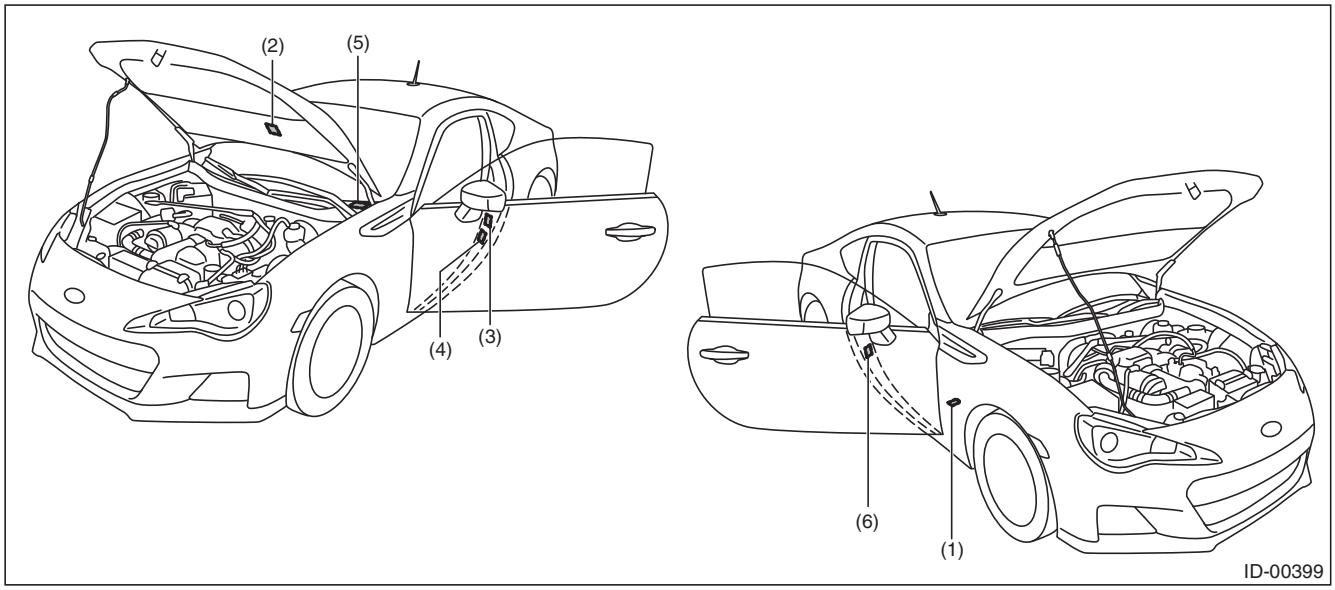

(1)	Vehicle identification number (V.I.N.) (below the driver's floor carpet)	(3)	Tire inflation pressure label	(5)	Vehicle identification number (V.I.N. plate)
(2)	Emission control label	(4)	MVSS label	(6)	Model number label

- **ENGINE**

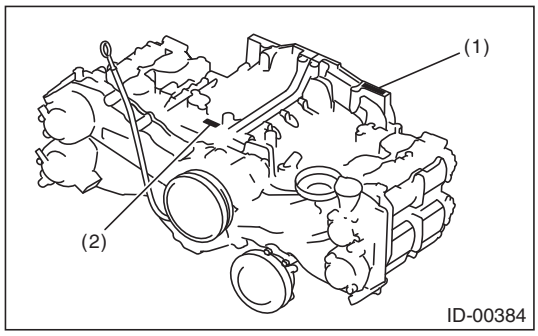

(1) Engine serial number
(2) Engine type (casting) cylinder block upper side

- **AUTOMATIC TRANSMISSION**

AT

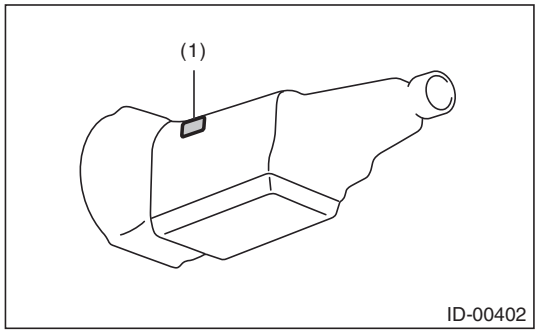

(1) Transmission serial No. (label)

- **MANUAL TRANSMISSION**

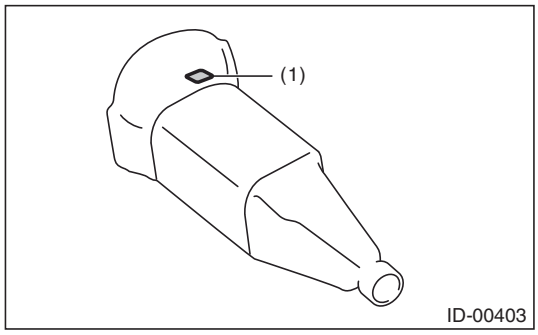

(1) Identification label

- **REAR DIFFERENTIAL**

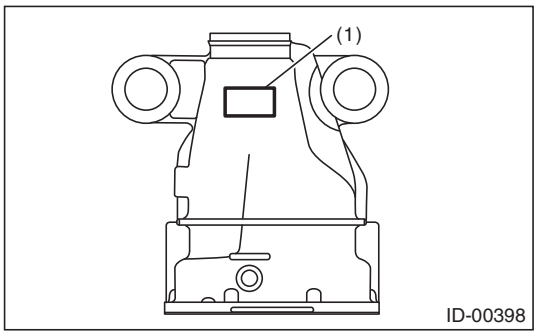

(1) Identification label

- **FMVSS LABEL, CMVSS LABEL**

Example (FMVSS label)

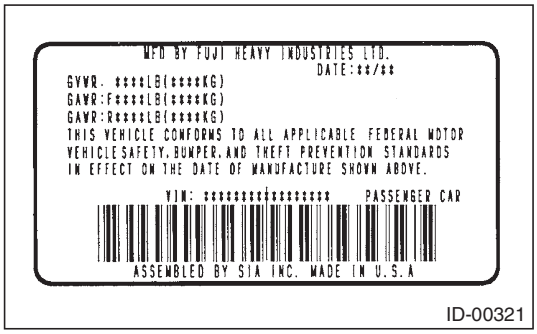

- **MODEL NUMBER LABEL**

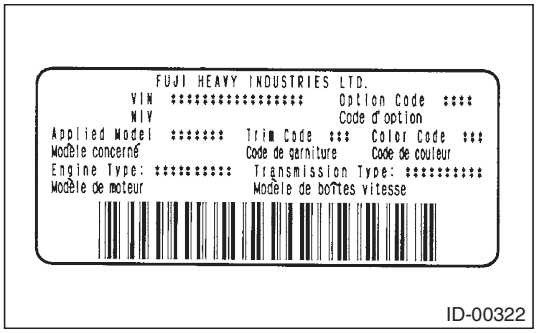

2. MEANING OF V.I.N.

The meaning of the V.I.N. is as follows:

]JF1ZCAB1XD160001[

The starting and ending brackets ( ] [ ) are stop marks.

Digits	Code	Meaning	Details
1 — 3	JF1	Manufacturer body area	JF1: Passenger car, FHI made
4	Z	Car line	Z: BRZ
5	C	Body type	C: COUPE
6	A	Displacement	A: 2.0 L non-turbo
7	B	Grade	B: R C: S
8	1	Restraint	1: Manual belts, dual airbag, side airbag for seat back, curtain air-bag for roof
9	X	Check digit	0 — 9 & X
10	D	Model year	D: 2013MY
11	1	Transmission type	1: FR 6 speed MT 2: FR 6 speed AT
12 — 17	600001	Serial number	600001 —

3. MODEL NUMBER LABEL

The model number label indicates: the applied model, the option code, the trim code, the engine type, the transmission type, and the exterior color code. This information is helpful when placing orders for parts.

ZC6AYB8

Digits	Code	Meaning	Details
1	Z	Series	Z: BRZ
2	C	Body type	C: COUPE
3	6	Total engine displace-ment Drive system	6: 2.0 L FR
4	A	Model year	A: 2013MY
5	Y	Destination	Y: U.S., Canada
6	B	Grade	B: R E: S
7	8	Transmission, fuel feed system	7: 6AT 8: 6MT

The engine and transmission type are as follows.

- **Engine**

FA20DAWB9A

Digits	Code	Meaning	Details
1 and 2	FA	Engine type symbol	FA: 4 cylinder gasoline
3 and 4	20	Displacement class	20: 2.0 L
5	D	Fuel feed system	D: DOHC non-turbo
6	A	Emission regulations	A: U.S. (Tier2/LEV)
7	W	Intake/exhaust system	W: Intake AVCS, exhaust AVCS
8	B	Mounted transmission	B: 6MT U: 6AT
9 and 10	9A	Detailed specifications	Used when ordering parts. For details, refer to the parts catalog.

• Transmission

1. MT

81 (MT ID label)

Digits	Code	Meaning	Details
1 — 2	81	MT model classification	81: TL701VD90A

TL701VD90A

Digits	Code	Meaning	Details
1	T	Transmission	T: Transmission
2	L	Transmission system	L: FR (MT)
3 and 4	70	Distance between gear center	70: Between main shaft and drive pinion
5	1	Classification	1: 6MT
6	V	Transmission specifications	V: Single range 6MT
7	D	Mounted engine	D: 2.0 L DOHC
8 — 10	90A	Detailed specifications	Used when ordering parts. For details, refer to the parts catalog.

2. AT

TX6A8GD90A

Digits	Code	Meaning	Details
1	T	Transmission	T: Transmission
2	X	Transmission system	X: FR
3 and 4	6A	Classification	6A: 6AT
5	8	Classification	8: Small type
6	G	Transmission specifications	G: With ATF cooler (with warmer feature)
7	D	Mounted engine	D: 2.0 L non-turbo DOHC
8 — 10	90A	Detailed specifications	Used when ordering parts. For details, refer to the parts catalog.

• Rear differential

Code	Reduction gear ratio	LSD
Y38	4.100	Torsen

• Option code

NJ

1-digit number

	N
A package	●
LSD	●
Leather package	●

2-digit number

	G	J	W
Spare tire	●	●	●
HID light	●	●	●
Leather seat	●		
17-inch summer tire	●	●	
Manual A/C		●	●
Auto A/C	●		

RECOMMENDED MATERIALS

RM

Page
1. Recommended Materials 2

1. Recommended Materials

A: RECOMMENDED MATERIALS

1. GENERAL

To insure the best performance, always use the specified oil, gasoline, adhesive, sealant, etc. or a substitute of equivalent quality.

2. FUEL

- Use unleaded gasoline to reduce air pollution, because using leaded gasoline will damage the catalytic converter.
- Do not use the low quality gasoline, or improper fuel such as diesel fuel, fuel alcohol, or gasoline additive because they will adversely affect on engine components.
- Always use gasoline that is equivalent to that prescribed in the owner's manual or that of high octane value. There is the possibility of damaging or improper operation of the engine and fuel injection system if the specifications are not observed. Use the prescribed gasoline type to maintain proper vehicle performance.

3. LUBRICANTS

Use the lubricants shown in the table below, or equivalent. See the table below to choose the correct SAE viscosity.

Lubricant	Recommended materials	
	API standard	ILSAC standard
Engine oil Choose oil suitable for the standard from the right.	SN or SM grade "Resource conserving" or "Energy conserving" 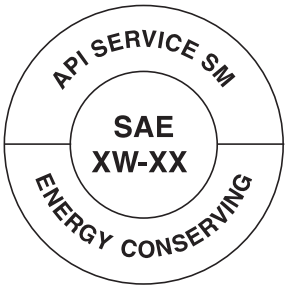 RM-00076 Those with the above API service labels	GF-5 or GF-4 RM-00002 Those with the above ILSAC certification mark (Starburst mark)
Manual transmission gear oil	MG gear oil special II or GL-3 standard	—
Rear differential gear oil	Differential gear oil LX or GL-5 standard	—

SAE viscosity No. and applicable temperature

Engine oil

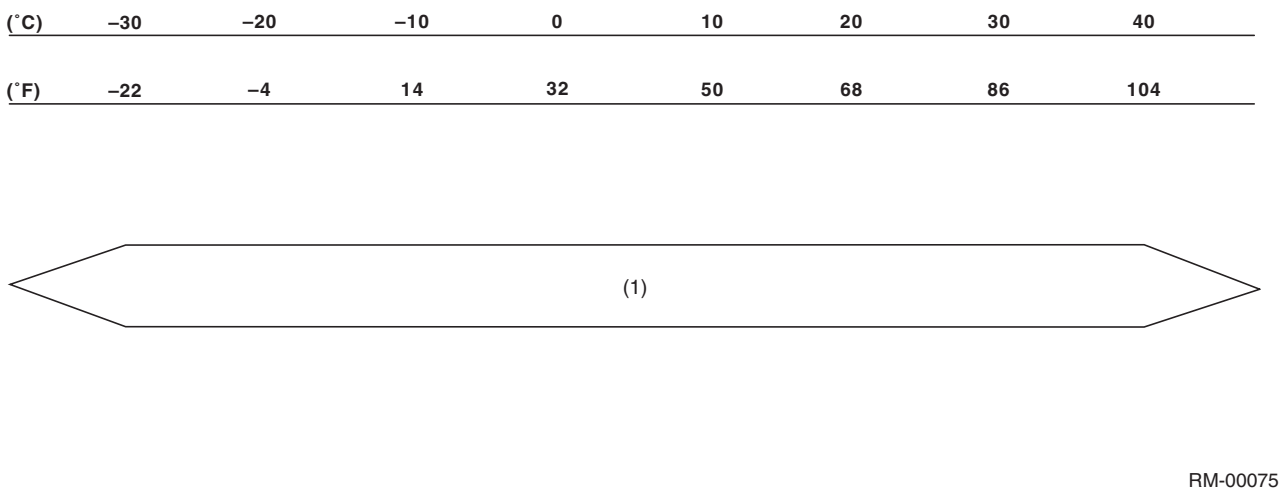

(1) 0W-20 (synthetic oil) Recommended

Manual transmission gear oil and rear differential gear oil

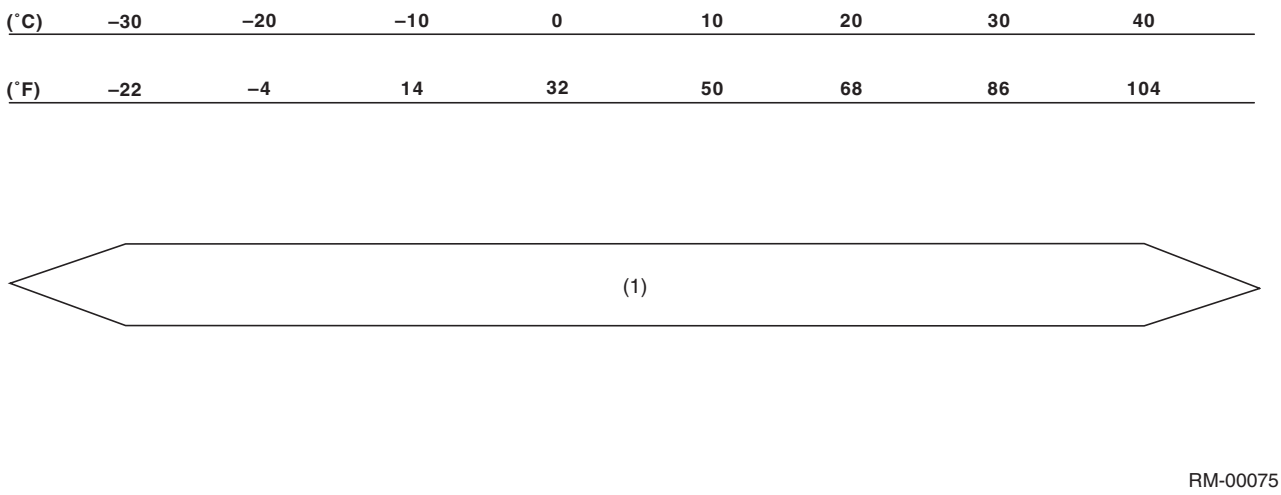

(1) 75W-85, 75W-90

4. FLUID

Use the fluids specified in the table below. Do not mix two different kinds or makes of fluid.

CAUTION:
Always use the recommended ATF for the AT. Using other fluid will cause a malfunction.

Fluid	Recommended materials	Item number	Alternative
Automatic transmission fluid	Auto Fluid WS	0888602303	—
Brake fluid and clutch fluid	FMVSS No. 116 DOT3, or DOT4	—	—

5. ENGINE COOLANT

Use genuine engine coolant to protect the engine.

Engine coolant	Recommended materials	Item number	Alternative
Coolant	SUBARU SUPER COOLANT (Concentrated type)	—	—
	SUBARU SUPER COOLANT (Diluted type)	K0670Y0001	
Water for dilution	Distilled water	—	Soft water or tap water
Cooling system protective agent	Cooling system conditioner	SOA345001	—

6. REFRIGERANT

Standard air conditioners on Subaru vehicles use HFC134a refrigerant. Do not mix it with other refrigerants. Also, do not use any air compressor oil except for ND-OIL8.

Air Conditioner	Recommended materials	Item number	Alternative
Refrigerant	HFC134a	—	—
Compressor oil	ND-OIL8	—	—

7. GREASE

Use grease and supplementary lubricants shown in the table below.

Grease	Application point	Recommended materials	Item number	Alternative
Supplementary lubricants	Oxygen sensor	Spray type lubricant	—	—
Grease	• MT main shaft (spline parts) • Clutch release lever • Clutch release bearing (inner circumference) • Clutch operating cylinder	NICHIMOLY N-130	K0879Y0501	—
	Clutch master cylinder push rod	SILICONE GREASE G-40M	004404003	—
	• Shift lever pin • Floor shift control shift lever retainer • Clutch pedal • Brake pedal	NIGTIGHT LYW No. 2 grease	—	—
	• Gear shift lever (MT joint parts) • Floor shift control shaft	Perma Lube CGN-3	—	—
	Select lever	Multemp D	—	—
	• Door latch • Door striker	SILICONE GREASE G-30M	004404002	—
	Steering gearbox (rack and pinion)	Multemp AC-P	—	—
	Steering gearbox (Boot and tie-rod installation parts)	Toshiba Silicon TSM 650 or Idemitsu Autorex A	—	—
	Disc brake (lock pin, guide pin, piston boot)	Brake grease (NIGLUBE RX-2)	K0779GA102	—
	Between front brake pad and shim	Molykote AS-880N	K0777YA010	—
	Brake pad clip	Molykote M7439 (Brake Grease 60G)	003602001	—
	Rear axle EDJ	NKG814	—	—
	Rear axle EBJ	NKG106	—	—

8. ADHESIVE

Use the adhesives shown in the table below, or equivalent.

Adhesive	Application point	Recommended materials	Item number	Alternative
Adhesive	Windshield glass, rear quarter glass, rear window glass and body	Dow Automotive's Adhesive: ESSEX U-400HV or equivalent Glass primer: U-401 and U-402 Painted surface primer: U-413	—	—

9. SEAL MATERIAL

Use the seal material shown in the table below, or equivalent.

Seal material	Application point	Recommended materials	Item number	Alternative
Seal material	• Bearing retainer FR • MT transmission case • MT extension housing sub-assembly • Rear differential	Seal Packing 1281	—	—
	• Oil pressure switch • PCV valve	THREE BOND 1324	004403042	—
	Service hole plug	THREE BOND 1105	004403010	DOW CORNING No. 7038
	Steering adjusting screw	THREE BOND 1141G or THREE BOND 1102	—	—
	• Front sealing cover • Rear sealing cover	3M Butyl Rubber 8626	—	—
	• Engine oil pan • Separator cover • Camshaft cap • Cylinder block • Rocker cover • Chain cover • Oil pan upper • Cylinder head • Camshaft carrier • Camshaft bearing cap	THREE BOND 1217G	K0877Y0100	—

PRE-DELIVERY INSPECTION

PI

Page
1. Pre-delivery Inspection 2

1. Pre-delivery Inspection

A: GENERAL DESCRIPTION

The purposes of the pre-delivery inspection (PDI) are as follows.
- Remove the additional parts used for ensuring the vehicle quality during transportation and restore the vehicle to its normal condition.
- Check the vehicle before delivery is in normal condition.
- Check the vehicle or parts for any damage occurred during transportation or storage.
- Check the vehicle after repair is in normal condition.
- Make sure to provide a complete vehicle to customer.

For above reasons, all SOAs (dealerships) must carry out the PDIs before delivery of vehicle.
Refer to this manual unless otherwise specified.

B: PRE-DELIVERY INSPECTION (PDI) PROCEDURE

Perform the procedures indicated in the table below.

Static Checks Just after Vehicle Receipt

Step	Check point
1. Appearance	1. If the vehicle is covered with protective coating, visually check the vehicle body for damage and dents. If the protective coating has been removed, visually check the painted body surfaces in detail for damage or rust. 2. Visually check the glass and light lenses for any damage, cracks or excessive gaps between body sheet metal. 3. Visually check the plated parts for any damage. 4. Check the instrument panel, console and trim for stains or dirt.
2. Tire	1. Check the tires for damage, defective, and dents on wheels. 2. Check the tire air pressure.
3. Fuse installation	If the vehicle is about to be delivered to customer, attach a DCC (back-up) fuse.
4. Door lock/unlock and open/close operations	1. Using the key, check the door can be locked or unlocked normally. 2. Open and close all doors to check that there are no problems. 3. Operate the power door lock switch to check that all doors are locked and unlocked normally.
5. Trunk lid open/close operations	1. Using the key, check that the trunk lid can be locked or unlocked normally. 2. Operate the trunk opener button to check that the trunk opens normally. 3. Use the valet key to check that the lock cannot be released. 4. Open and close the trunk lid to check that there are no problems.
6. Operation check of trunk lid release lever	Operate the trunk lid release lever to check that the trunk lock is unlocked normally.
7. Fuel lid opener lever	Operate the fuel lid opener to check that the fuel filler lid can be unlocked normally.
8. Towing hook (eyebolt)	At factory shipment, the towing hook (eyebolt) is installed to the rear bumper. Remove the towing hook (eyebolt), store it in the holder.
9. Accessory	Check that the following accessories are equipped. • Owner's manual • Warranty booklet • Maintenance note • Spare key • Key No. plate • Jack • Tool set • Spare tire • Towing hook
10. Front hood lock release	Operate the front hood lock release lever to check that the front hood opens normally.
11. Battery	Check the battery for any abnormal conditions such as rust or traces of battery fluid leaks.
12. Brake fluid	Check the brake fluid amount.

Step	Check point
13. Engine oil	Check the engine oil amount.
14. Transmission gear oil	Check for leakage of the transmission gear oil.
15. Rear differential gear oil	Check for leakage of gear oil from the rear differential.
16. Engine coolant	Check the engine coolant level.
17. Clutch fluid	Check the clutch fluid amount.
18. Window washer fluid	Check the window washer fluid amount.
19. Front hood latch	Check that the front hood is closed normally and locked securely.
20. Keyless entry system	Check that the keyless entry system operates normally.
21. Keyless access function	Check that the keyless access function operates normally.
22. Security system	Check that the security system operates normally.
23. Seat	1. Check the seat surfaces for stains or dirt. 2. Check the seat installation conditions and functionality.
24. Seat belt	Check the seat belt installation conditions and functionality.
25. TPMS (U.S. model)	Check that the TPMS warning light operates normally. If it does not operate normally, perform the diagnosis by referring to TPMS (Diagnosis).
26. Grommet installation	Install the grommet contained in the glove box to the tie-down hole.
27. Horn	Check if the horn sounds.
28. Hazard lights	Check that the hazard lights illuminate.
29. Map light	After installing the fuse, check that the map light illuminates/turns off normally.

Checks with the engine running

Step	Check point
30. Delivery mode connector	Install the delivery mode connector.
31. Immobilizer system	1. Check that the engine starts with all keys that are equipped on vehicle. 2. Check that the security indicator light flashes immediately after removing the key.
32. Starting condition	Start the engine and check that the engine starts smoothly.
33. Exhaust system	Check that the exhaust noise is normal and no leaks are found.
34. Indicator and warning lights	Check that all indicator lights and warning lights are operating correctly.
35. Heater & ventilation	Check that the heater & ventilation system operates normally.
36. Air conditioner	Check that the air conditioner operates normally.
37. Clock	Check that the clock operates normally.
38. Audio	Check the radio and AUX operate normally.
39. Navigation	Check the navigation and AUX operate normally.
40. Accessory power supply socket	Check that the accessory power supply socket operates normally.
41. Lighting system	Check that the lighting system operates normally.
42. Vehicle stability control (VSC)	Check the VSC SPORT and VSC OFF switch functions for normal operation.
43. Illumination control	Check that the illumination control operates normally.
44. Window washer	Check that the window washer system operates normally.
45. Wiper	Check that the wiper system operates normally.
46. Power window	Check that the power window operates normally.
47. Rear defogger	Check that the rear defogger operates normally.
48. Door mirror	Check that the remote control mirror and heated mirror operate normally.
49. Diagnostic trouble code (DTC) check	Check that the diagnostic trouble code (DTC) is not detected.

Dynamic Test with the Vehicle Running

Step	Check point
50. Brake test	Check the foot brake for normal operations.
51. Parking brake	Check the parking brake for normal operations.
52. Shift control	Check that the shift patterns are correct.
53. Cruise control	Check that the cruise control system operates normally.

Checks after Dynamic Test

Step	Check point
54. Fluid leakage	Check for fluid/oil leaks.
55. Water leak test	Spray the vehicle with water and check for water leaks.
56. Appearance 2	1. Remove the protective coating (if equipped). 2. Check the body paints for damage and stain. 3. Check the plated parts for damage and rust.

1. APPEARANCE

- If the vehicle is covered with protective coating, visually check the vehicle body for damage and dents.
- When there is no protective coating, check the body paints for damage or stains in detail and repair as necessary.
- Check the window glass, door glass, and lights for any cracks or damage, and replace as necessary.
- Visually check the plated parts, such as the grilles and door knobs, for damage or loss of gloss and replace the parts as necessary.
- Check the instrument panel, console and trim for stains or dirt.

2. TIRE

- Check the tires for damage, defective, and dents on wheels.
- Check the tire size, spare tire and tire air pressure described on the tire air pressure label (driver's side).

3. FUSE INSTALLATION

The DCC (back-up) 30A fuse is moved from position (A) to (B) as shown in the figure below to prevent battery consumption when vehicles are delivered. Remove the fuse from (B) and install in (A) as shown in the figure below.

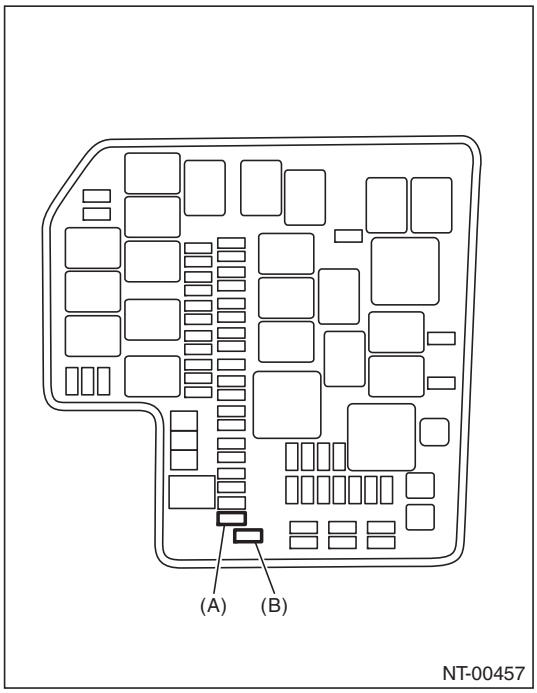

4. LOCK/UNLOCK AND OPEN/CLOSE OPERATION CHECKS OF DOORS

1) Using the key, lock and unlock the door several times to check for normal operation. Open and close the door several times for smooth movement.

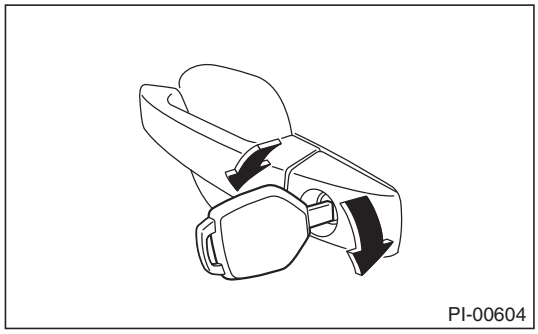

2) Completely close the driver's door, and then check the smooth movement with operating door lock knob from lock to unlock several times. Set the door lock knob (A) to lock position. Then pull the inner remote (B) to ensure that doors will not open.
For other doors, place the door lock knob (A) to lock position and then pull the inner remote (B) to ensure that doors will not open.

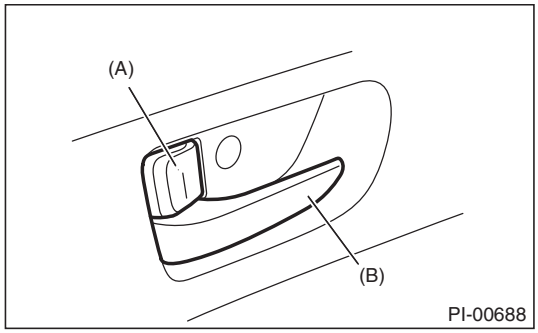

(A) Door lock knob
(B) Inner remote

3) Close all the doors, and then press the lock on power door lock switch at driver's side. Check that all doors lock.

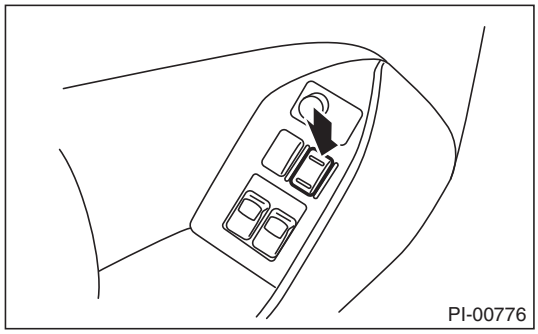

4) Press the driver's side power door lock switch to unlock side. Check that all doors unlock.

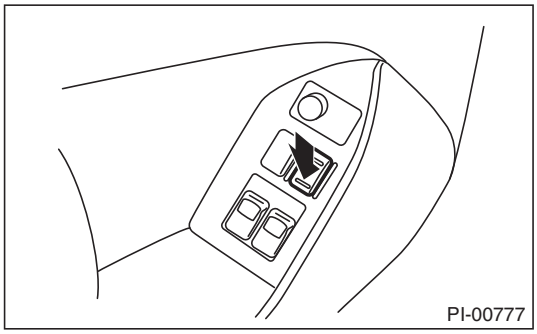

5) Check that the passenger's power door lock switch locks and unlocks normally in the same manner.

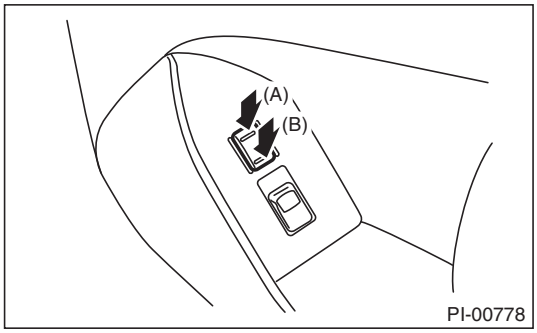

(A) Lock
(B) Unlock

6) Insert the key to ignition switch, and open the driver's side door. Press lock on power door lock. Check that the door is not locked.

5. TRUNK LID OPEN/CLOSE OPERATIONS

1) Operate the trunk lock release lever to check that the trunk lid opens.
2) Open and close the trunk lid several times for smooth movement.
3) Press the trunk opener lock button in the trunk.

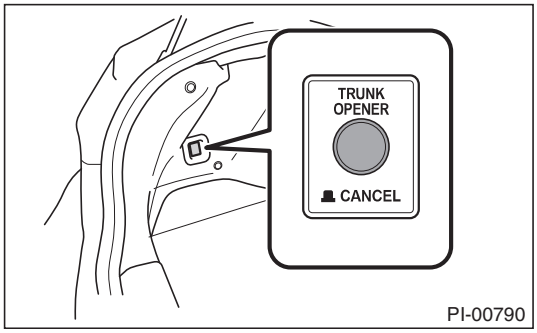

4) Check that the trunk lid will not open even when the trunk opener button is pressed.

6. OPERATION CHECK OF TRUNK LID RELEASE HANDLE

CAUTION:
Do not check the trunk lid release handle when in the trunk. If the trunk lid release handle is defective, you may be trapped in.

1) Use a flat tip screwdriver. Slide the screwdriver blade from the slit aperture of the lock assembly fully to the end until you hear a click. This places the latch in the locked position.

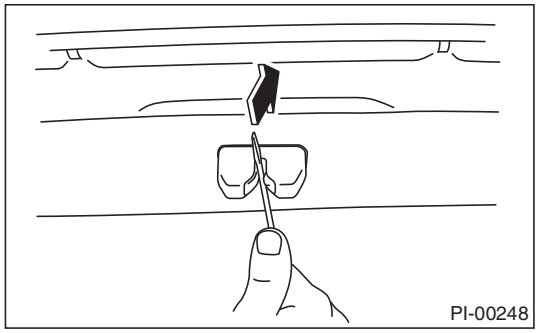

2) Make sure the latch is released by pulling the yellow trunk lid release handle in the direction of arrow.

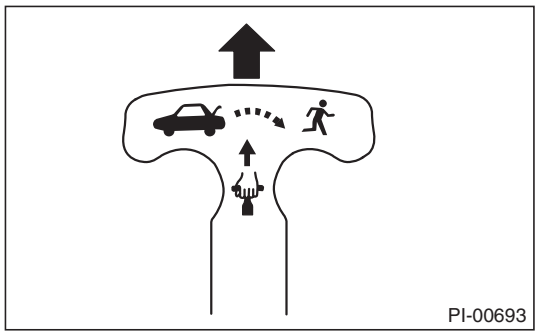

7. FUEL LID OPENER LEVER

Operate the fuel lid opener lever to check that the fuel lid is unlocked normally. Check that the filler cap is securely closed.

8. TOWING HOOK (EYEBOLT)

NOTE:
At factory shipment, the towing hook (eyebolt) is installed to the rear bumper for securing the vehicle during transportation. Follow the procedure below to store the towing hook (eyebolt) to the holder in the spare tire.

1) Remove the towing hook (eyebolt) from the rear bumper.

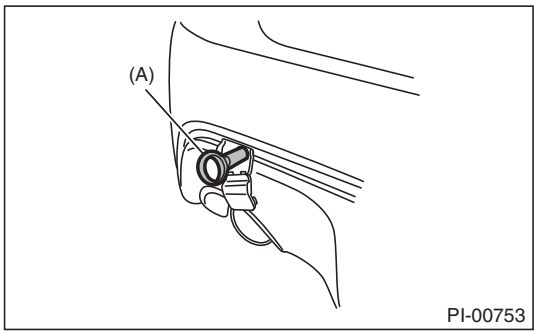

(A) Towing hook (eyebolt)

2) Store the towing hook (eyebolt) to the holder in the trunk. (Clean any dirt that is present.)

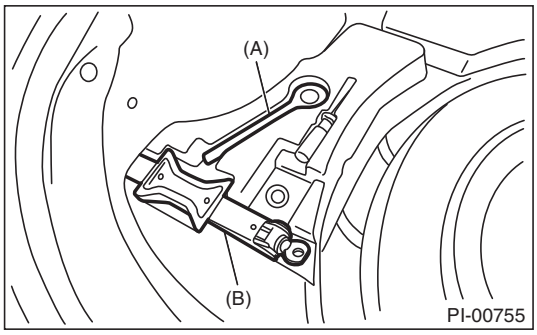

(A) Towing hook (eyebolt)
(B) Jack

3) Install the supplied rear hook cover to rear bumper.

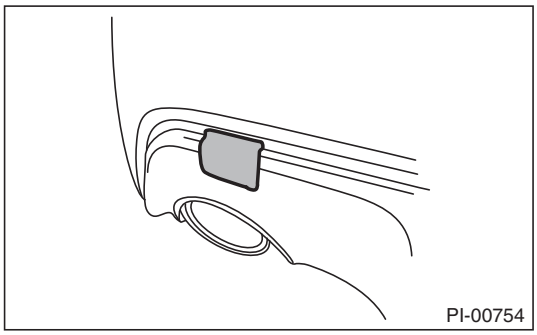

9. ACCESSORY

Check that the following accessories are provided.

- Owner's manual
- Warranty booklet
- Maintenance note
- Spare key
- Key No. plate
- Jack
- Tool set
- Spare tire

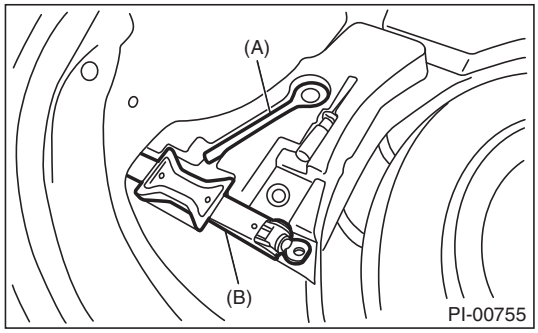

(A) Towing hook (eyebolt)
(B) Jack

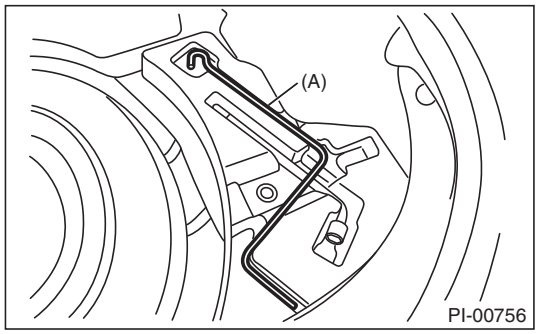

(A) Jack handle

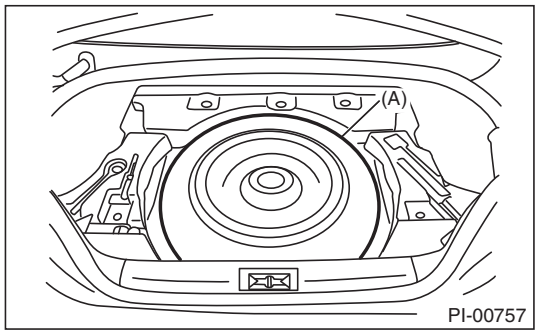

(A) Spare tire

10.FRONT HOOD LOCK RELEASE

Operate the front hood release lever to check that the front hood is unlocked normally.

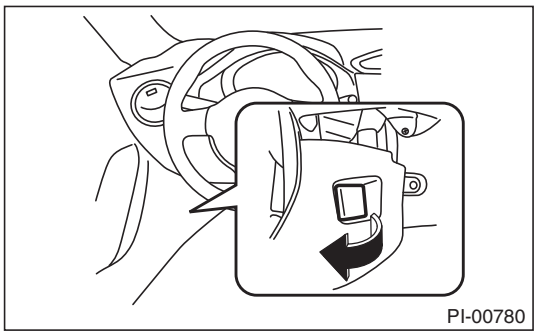

Operate the lever (A) and check that the front hood is opened normally.

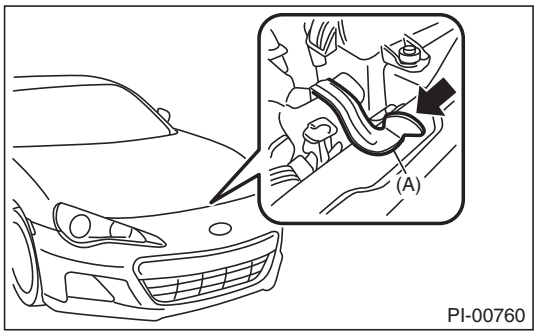

11.BATTERY

Check the battery terminals to make sure that there are no rust or corrosions due to fluid leaks. Check that the battery caps are securely tightened.

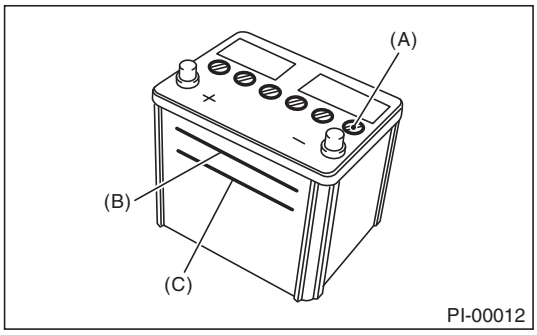

(A) Cap
(B) Upper level
(C) Lower level

12.BRAKE FLUID

Check the brake fluid amount. If the amount is insufficient, carry out a brake line test to identify brake fluid leaks and check the brake operation. After that, refill the brake fluid tank with the specified type of fluid.

CAUTION:
If the brake fluid is spilt over exhaust pipe, wipe it off with cloth to avoid emitting smoke or causing a fire.

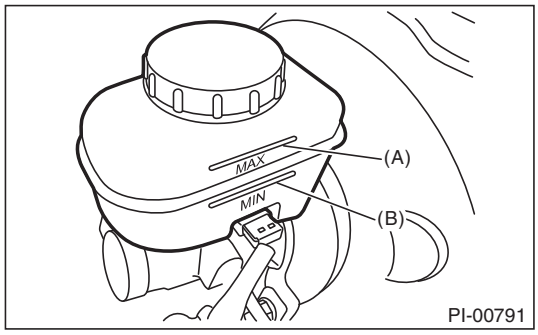

(A) MAX. level
(B) MIN. level

13.ENGINE OIL

1) Park the vehicle on a level surface.
2) Remove the oil level gauge and wipe away the oil.
3) Reinsert the oil level gauge all the way. Be sure that the oil level gauge is correctly inserted and properly orientated.
4) Pull out the oil level gauge again, and check the oil level. If the engine oil level is below “L” mark, add oil to bring the level up to “F” mark.
5) Start the engine, and spread the oil in engine.
6) After turning off the engine, wait five minutes or more for the oil to return to the oil pan before checking the oil level.

NOTE:
To prevent overfilling of engine oil, do not add oil above “F” mark when the engine is cold.

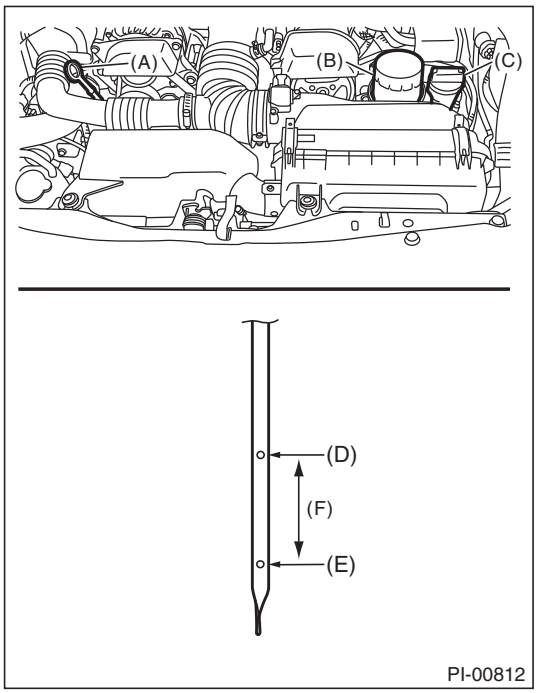

(A) Oil level gauge
(B) Oil filter
(C) Oil filler cap
(D) “F” mark
(E) “L” mark
(F) Approx. 1 L (1.1 US qt, 0.9 Imp qt)

14.TRANSMISSION GEAR OIL

Check for leakage of the transmission gear oil.

CAUTION:
If gear oil is spilt over the exhaust pipe, wipe it off with a cloth to avoid emitting smoke or causing a fire.

15.REAR DIFFERENTIAL GEAR OIL

Check for leakage of gear oil from the rear differential.

CAUTION:
If the rear differential gear oil is spilt over exhaust pipe, wipe it off with cloth to avoid emitting smoke or causing a fire.

16.ENGINE COOLANT

Check the coolant amount on the reservoir. If the amount of engine coolant is insufficient, check that no leaks are found. Then, add the necessary amount of coolant with the specified concentration.

CAUTION:
If the coolant is spilt over exhaust pipe, wipe it off with cloth to avoid emitting smoke or causing a fire.

17.CLUTCH FLUID

Check the clutch fluid amount. If the amount of fluid is insufficient, check that no leaks are found. Then, add the necessary amount of specified fluid.

CAUTION:
If any clutch fluid is spilt on the exhaust pipe, wipe it off with a cloth to avoid emitting smoke or causing a fire.

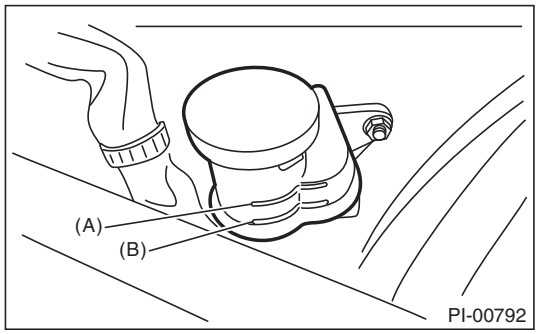

(A) MAX. level
(B) MIN. level

18.WINDOW WASHER FLUID

Check the window washer fluid amount. If the amount of washer fluid is insufficient, check that no leaks are found. Then, add the necessary amount of washer fluid.

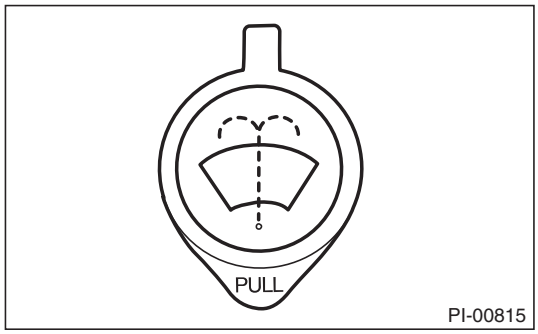

19.FRONT HOOD LATCH

Close the front hood. Check that the front hood is completely latched.

20.KEYLESS ENTRY SYSTEM

Check the keyless entry system operations as follows:

- Fully open all the door windows.
- Remove the key from ignition switch, and then close all doors. (model without keyless access function)
- Turn the ignition switch to OFF and close all doors (model with keyless access function).
- Press the “LOCK” button momentarily on the keyless transmitter. Check that all the doors become locked, the buzzer sounds once, and the hazard lights flash once.

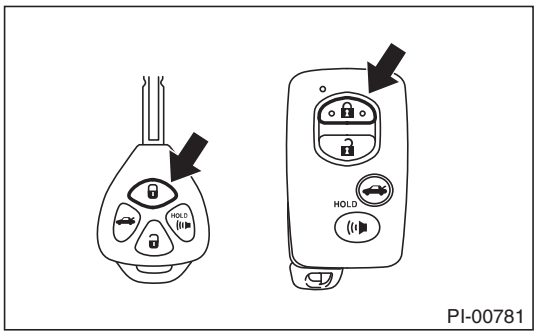

- Press the “UNLOCK” button momentarily on the keyless transmitter. Check that the driver’s door is unlocked, the buzzer sounds twice, and the hazard lights flash twice.

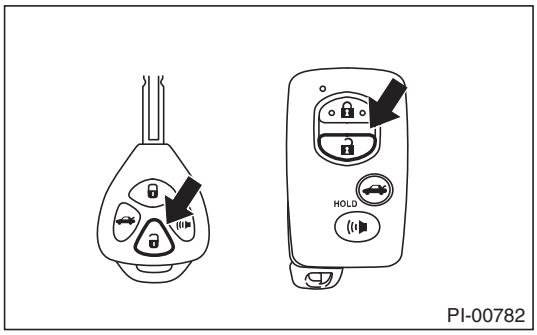

- Within five seconds, briefly press the “UNLOCK” button on the keyless transmitter. Check that the all doors are unlocked, the buzzer sounds twice, and the hazard lights flash twice.
- Check that the buzzer sounds once, when the trunk lid unlock button is held down to unlock the trunk lid.

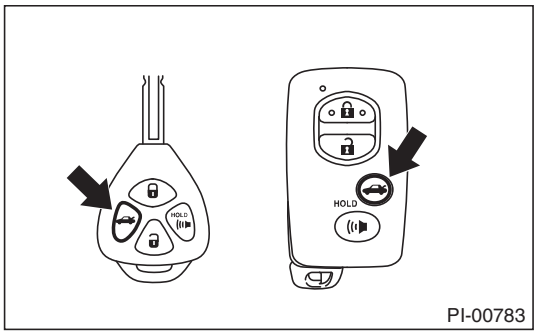

• Press the “PANIC” button of the keyless transmitter. Check that the panic mode (the horn keeps sounding) is initiated. Also, check that this condition continues for 30 seconds or until when any of the buttons on the keyless transmitter are pressed.

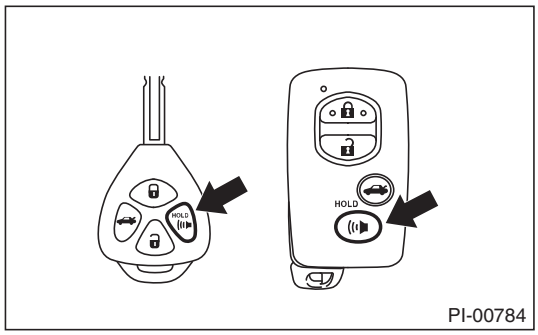

• Momentarily press the “LOCK” button on the keyless transmitter with one door open. Check that the buzzer sounds to warn that the door is not fully closed.

• Driver’s side

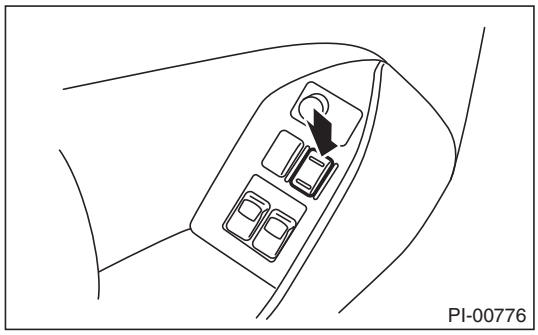

• Passenger’s side

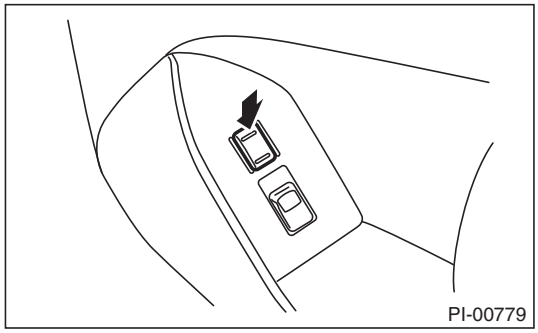

Alarm sound operational check

• Models with the keyless access function use the buzzer and sounds the alarm when the door is locked or unlocked. The alarm sound can be turned OFF. To turn the alarm sound from ON to OFF, close all doors, (with the key not inserted in the key cylinder), hold down the “UNLOCK” side of the power door lock switch and insert the key in the key cylinder. Within 10 seconds, insert and take out the key for 5 times or more, and within 10 seconds after that, open and close the driver’s door. With the door closed, the hazard light will flash 3 times, indicating that the alarm sound has been turned OFF. To turn the alarm sound from OFF to ON, perform this procedure again. The hazard light will flash 3 times, indicating that the alarm has been turned ON.

21.KEYLESS ACCESS FUNCTION

CAUTION:

• When performing the check, check one access key at a time, separating individual keys.

• Do not leave any separated access keys in the vehicle.

NOTE:

The following inspections show the initial settings. When the settings are different from the initial settings, use Subaru Select Monitor to check the details of each setting for inspections.

• While carrying the access key, check that the room light illuminates when you move close to the front door handles of the vehicle whose doors are all locked.

• While carrying the access key, check that the driver’s door unlocks and the hazard lights flash by grasping the driver’s side front door knob (touching the touch sensor).

• While carrying the access key, check that all doors are unlocked and the hazard lights flash by grasping the front passenger’s door knob (touching the touch sensor).

• While carrying the access key, check that all doors are locked and the hazard lights flash when touching the front door lock-touch sensor.

NOTE:
- The hazard lights flash twice and the buzzer sounds twice when unlocking.
- The hazard lights flash once and the buzzer sounds once when locking.

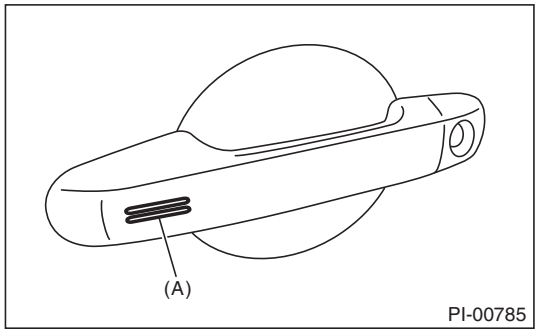

(A) Lock-touch sensor

- While carrying the access key, check that the trunk unlocks when you press the trunk opener button.

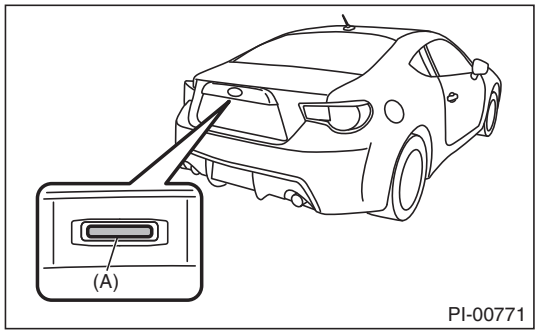

(A) Trunk opener button

- Close all doors, and while carrying the access key, check that all doors are locked automatically 30 seconds after grasping the front door knob (touching the touch sensor) to unlock doors.
- Check the mechanical key attached to the access key can be used for locking/unlocking.

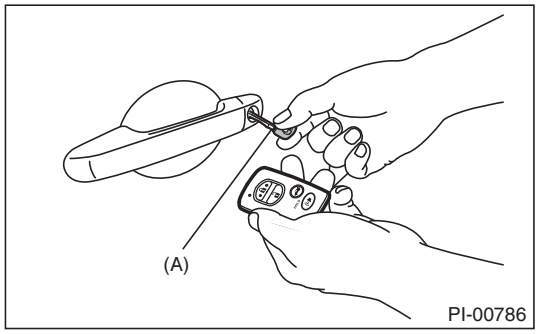

(A) Mechanical key

- With the access key in the vehicle, check that warning buzzer sounds and locking does not occur when you touch the door touch sensor.

CAUTION:
Remove the mechanical key from the access key and hold the mechanical key.

- With the front door locked and the access key in the trunk (with trunk closed), check that the warning buzzer sounds and the trunk unlocks when you press the trunk opener button.

22.SECURITY SYSTEM

• Model with keyless access function

Check that the security system operates as indicated below.
1) Turn on the security system.
2) Fully open all the door windows.
3) Remove the key from ignition switch, and then close all doors.
4) Press the access key “LOCK” button once.

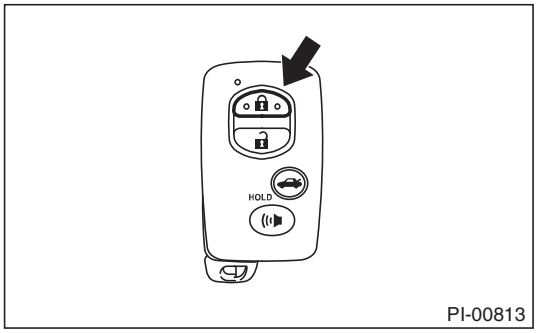

5) When all doors are locked, the security indicator light illuminates to indicate that the alarm system is in the monitoring prepared condition.

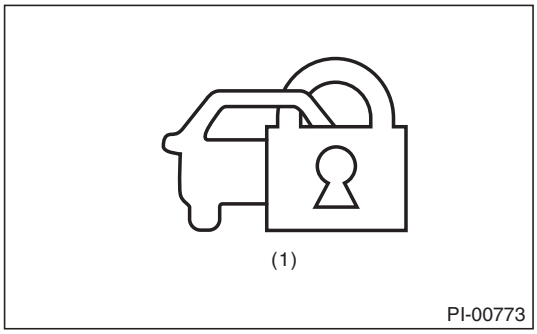

(1) Security indicator light

6) The security indicator light flashes once for two seconds 30 seconds after the condition of step 5) is reached, and the system enters the monitoring condition.

7) Press the access key “UNLOCK” button once.

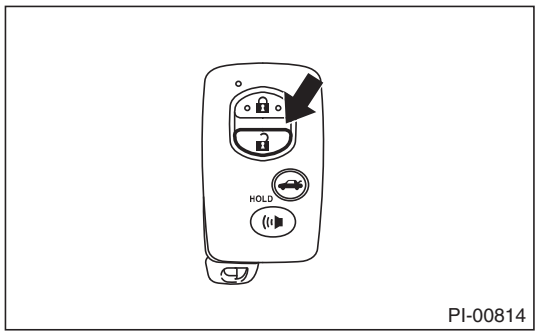

PI-00814

8) The driver’s door unlocks and the alarm system is in the non-monitoring condition.
9) Check that the alarm does not sound when any of the doors are opened.
10) Press the access key “LOCK” button once with one door open.

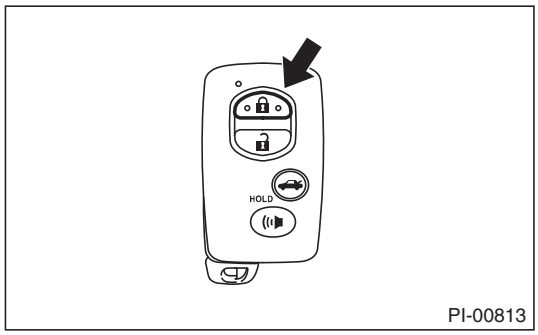

PI-00813

11) Check that the buzzer sounds to warn that the door is not fully closed.
12) Close all doors.
13) Illuminates to indicate monitoring prepared condition (indicator light illuminates).
14) The security indicator light flashes once for two seconds 30 seconds after the condition of step 13) is reached, and the system enters the monitoring condition.
15) Press the “UNLOCK” button on the access key once to turn the system into non-monitoring condition.

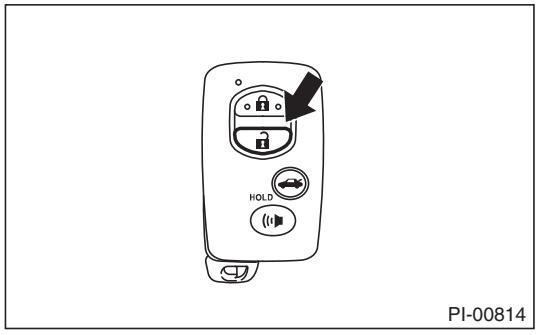

PI-00814

16) Momentarily press the “LOCK” button of the power door lock switch with any one door open.
- Driver’s side

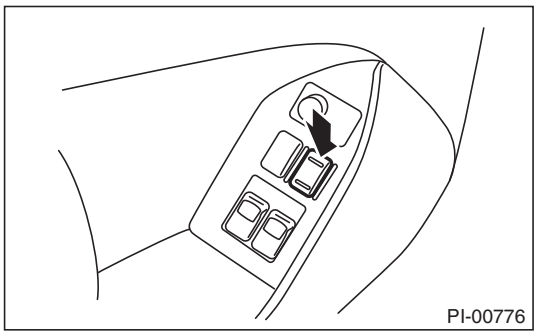
PI-00776

- Passenger’s side

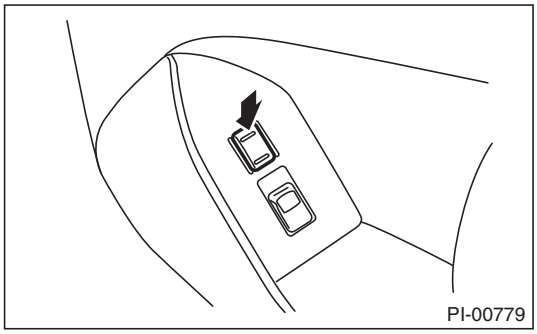
PI-00779

17) Close all doors.
18) When all doors are locked, the indicator light illuminates to indicate that the alarm system is in the monitoring prepared condition.
19) The security indicator light flashes once for two seconds 30 seconds after the condition of step 18) is reached, and the system enters the monitoring condition.
20) When the alarm system is in the monitoring condition, use the inner lock knob or the key to unlock the door.
21) Check that the alarm condition occurs (horn sounds continuously, hazard light flashes, security indicator illuminates).
22) Check that the condition described in 21) continues for 60 seconds or more, or until the access key “UNLOCK” button is pressed, or until the position switch is turned ON with the correct access key.
23) When none of above is applicable, perform troubleshooting for the security system.
24) Turn off the security system.

23.SEAT

1) Check that each seat provides full functionality in sliding and reclining. Check all available functions of the rear seat such as the backrest tilt knob.
2) Check the passenger's seat occupant detection system.
   (1) Empty the passenger's seat and turn the ignition switch to ON.
   (2) Check that the passenger airbag ON/OFF indicator lights both turn on simultaneously for approximately six seconds, and after turning off for two seconds, only the OFF light illuminates.

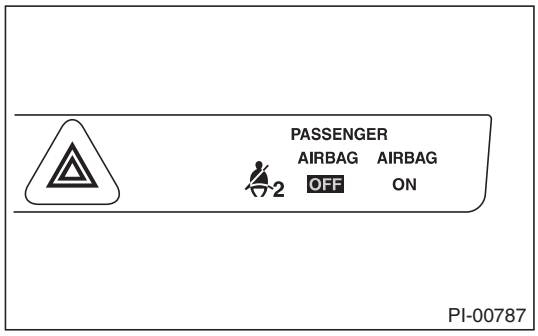

3) Have an adult passenger sit in the passenger's seat, and check whether the ON light of the passenger side airbag ON/OFF indicator illuminates.
4) Have the passenger get out of the passenger's seat, and check whether the OFF light of the passenger side airbag ON/OFF indicator illuminates.

24.SEAT BELT

1) Pull out the seat belt and then release it. Check that the belt retracts smoothly.
2) Check seat belt warning function
   (1) Turn the ignition switch to ON with the driver's and passenger's seat belt detached.
   (2) Check the driver's and passenger's seat belt warning light blink for approx. 6 seconds and the buzzer sounds intermittently.
   (3) Afterwards, check that the seat belt warning lights illuminate. (If no passenger is on the passenger's seat, the seat belt warning light on passenger's seat does not operate.)

25.TPMS (U.S. MODEL)

1) Turn the ignition switch to ON, and check that the TPMS warning light is in a normal operation condition.
- Normal operation (IG ON (Light check))

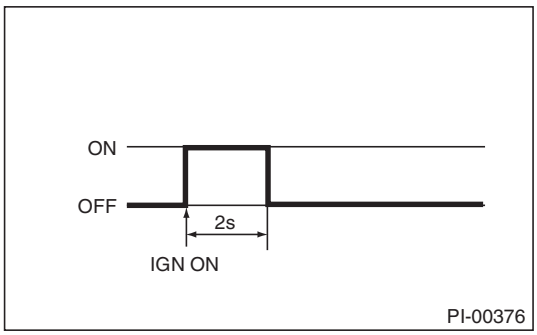

2) If the TPMS warning light display does not operate normally, check and repair the system.

26.GROMMET INSTALLATION

Install the grommet contained in the glove box to the tie-down hole.

CAUTION:
Securely install the grommet to ensure that the tie-down hole is blocked up by the grommet. Dust or foul odors could pass into the side seal through the tie-down hole and enter the interior directly from the rear quarter.

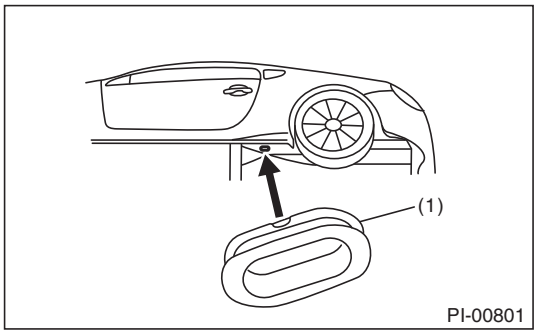

(1) Grommet

27.HORN

Check if the horn sounds.

28.HAZARD LIGHT

Check that the hazard lights illuminate.

29.MAP LIGHT

After installing the fuse, check that the map light illuminates/turns off normally.

30.DELIVERY MODE CONNECTOR

Connect the delivery mode connector of the driver's side A pillar lower area. After connection, check that the key interlock system functions.

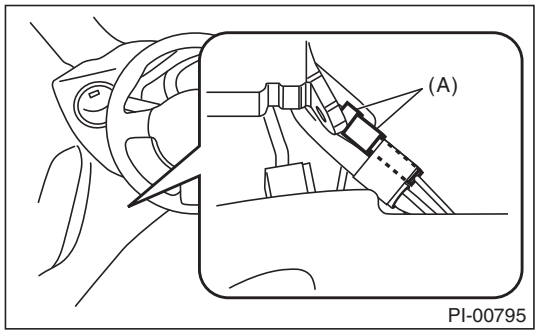

(A) Delivery mode connector

31.IMMOBILIZER SYSTEM

1) Check that the engine starts with all keys that are equipped on vehicle. Also, when starting the engine, check that the security indicator light goes off.
2) Check that the security indicator light flashes immediately after removing the key. (model without keyless access function)
3) Check that the security indicator light flashes immediately after turning the ignition switch from ON to ACC or OFF, or when the doors are opened/closed with the ignition switch at ON or ACC. (model with keyless access function)

NOTE:
If malfunctions occur, refer to “IMMOBILIZER (DIAGNOSIS)”.

32.STARTING CONDITION

Start the engine and check that the engine starts smoothly. If the battery voltage is low, recharge or replace the battery. If any noises are observed, immediately stop the engine and check and repair the abnormal components.

33.EXHAUST

Listen to the exhaust noise to see if no noises are observed. Check that no leaks are found.

34.INDICATOR AND WARNING LIGHTS

Check that all indicator lights and warning lights are operating correctly.

35.HEATER & VENTILATION

Operate the heater & ventilation system to check for normal airflow outlet control, air inlet control, airflow capacity and heating performance.

36.AIR CONDITIONER

Operate the air conditioner. Check that the A/C compressor operates normally and enough cooling is provided.

NOTE:
To prevent the insufficient lubrication of the air conditioner, operate the air conditioner for five minutes at idling.

37.CLOCK

Check that the clock operates normally.

38.AUDIO

1) Check if the AM/FM radio broadcasting can be heard.
2) Check that all the radio functions work properly and the noise level is normal.
3) Check the CD and AUX for normal operation.
4) Check that the AUX is installed into the console without looseness.

39.NAVIGATION SYSTEM

1) Check all display functions for normal operation. (Refer to the operation manual.)
2) Check that the navigation system operates normally.
3) Check the radio, CD player and AUX for normal operation.
4) Check that the AUX is installed into the console without looseness.

40.ACCESSORY POWER SUPPLY SOCKET

1) Check operation of the accessory power supply socket in console box.
2) Check operation of the accessory power supply socket in the glove box.

41.LIGHTING

1) Check the headlight operations. When pulling out the key, check if the headlight illuminates by turning the headlight switch from OFF to ON.
2) Check the stop light operation.
3) Check other lights for normal operations.

42.VSC

• With the engine running, operate the VSC SPORT switch, and check that the “VSC SPORT” and “VSC OFF” indicator lights illuminate and that they turn off when the switch is operated again.
• With the engine running, press the VSC OFF switch for a short period (approx. 1 sec. or less), and check that the “TRC OFF” indicator light illuminates and that it turns off when the switch is operated again.
• With the engine running, press the VSC OFF switch for a long period (approx. 3 sec. or more), and check that the “TRC OFF” and “VSC OFF” indicator lights illuminate and that they turn off when the switch is pressed again for a short period.

43.ILLUMINATION CONTROL

Check that the illumination control operates normally.

44.WINDOW WASHER

Check that the window washer system injects washer fluid to the specified area of the windshield shown in the figure.

Front spray position:

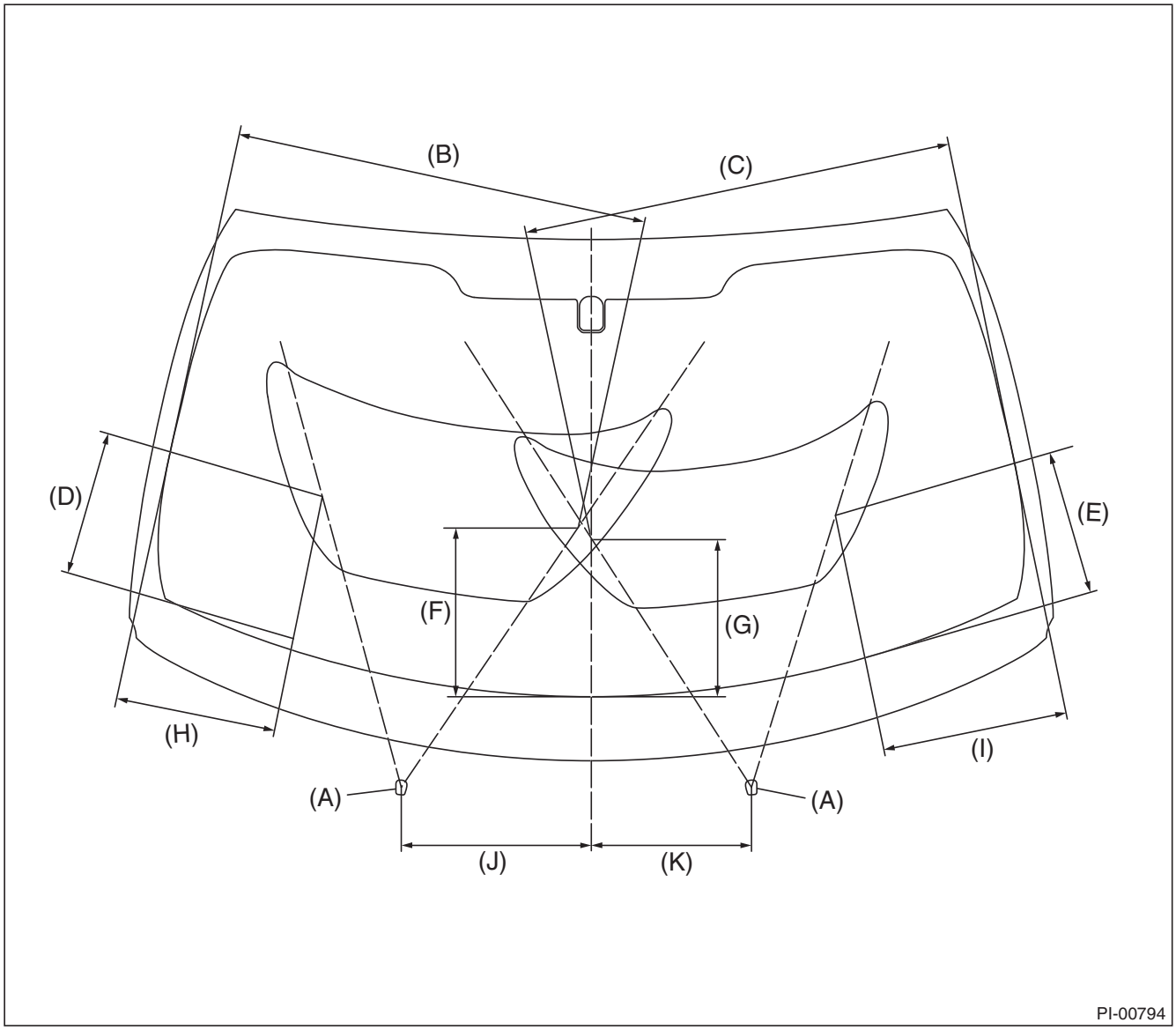

(A)	Washer nozzle	(B)	660 mm (25.98 in)	(C)	684 mm (26.93 in)
(D)	247 mm (9.72 in)	(E)	232 mm (9.13 in)	(F)	268 mm (10.55 in)
(G)	250 mm (9.84 in)	(H)	253 mm (9.96 in)	(I)	299 mm (11.77 in)
(J)	300 mm (11.81 in)	(K)	250 mm (9.84 in)		

45.WIPER

Check the front and rear wipers for normal operations.

46.POWER WINDOW

CAUTION:
If battery has been removed, AUTO UP does not operate properly because initialized. In this case, perform the initial setting and check AUTO UP operates properly.

NOTE:
Check the power window if the door glass of the driver's seat does not open/close automatically.

- Operate the power window switches one by one to check that each of the power windows goes up and down without noises.
- Check AUTO UP/AUTO DOWN operate properly by operating the power window switch on driver's and passenger's seat sides.

47.REAR DEFOGGER

Press the rear defogger switch and check that the light inside the switch is activated for approx. 15 minutes and the rear defogger automatically turns to OFF.

48.DOOR MIRROR

- Check that the remote control mirror operates normally.
- Check that the heated mirror operates normally.

49.DIAGNOSTIC TROUBLE CODE (DTC) CHECK

Read the diagnostic trouble code and check that the diagnostic trouble code is not detected.
If any diagnostic trouble code is detected, clear all.
1) Read Diagnostic Trouble Code

NOTE:
For detailed operation procedures, refer to "PC application help for Subaru Select Monitor".
2) Clear Memory Mode

NOTE:
For detailed operation procedures, refer to "PC application help for Subaru Select Monitor".

50.BRAKE TEST

Check the foot brake for normal operations.

51.PARKING BRAKE

Check the parking brake for normal operations. When pulling the parking brake lever with a force of 200 N (20 kgf, 45 lb), check that the lever stroke of parking brake lever is 7 to 8 notches.

52.SHIFT CONTROL

- **AT**

1) Turn the ignition switch to ON.
2) While brake pedal is not depressed, check if the select lever does not move from "P" range.
3) While brake pedal is depressed, check if the select lever moves from "P" range.
4) Set the selector lever to each gear position and check the shifting while driving the vehicle. Operate the selector lever and paddle shift at manual mode and check the shifting while driving the vehicle.

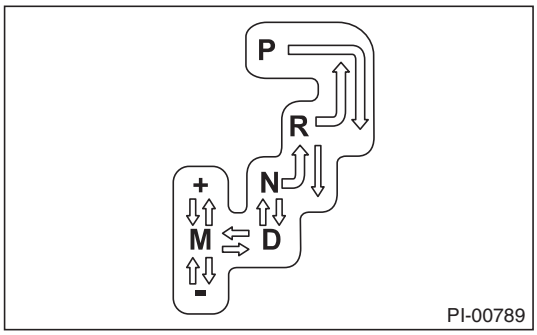

5) With the ignition switch at ON, operate the SNOW/SPORT switch, and check that "SNOW" and "SPORT" indicator lights in the meter illuminate/turn off accordingly.
6) Set the select lever to other than "P" range. (Other than models with keyless access function)
7) When the ignition switch is turned to OFF, check if the ignition key switch cannot be removed. (Other than models with keyless access function)

- **MT**

1) Check for smooth operation to each position.
2) Check that the lever cannot be moved to the reverse position unless the pull-ring is pulled up.
3) Check that the lever can be moved to the reverse position when the pull-ring is pulled up.

53.CRUISE CONTROL

Operate the cruise control system. Check that the system is activated and deactivated correctly.

54.FLUID LEAKAGE

Check entire areas of the vehicle for any trace of engine coolant/engine oil/transmission fluid leaks.

55.WATER LEAK TEST

Spray the vehicle with water using a hose and check that no water enters the passenger compartment.

• Before performing the water leakage test, remove anything that may obstruct the operation or which must be kept dry.

• Close all the windows and doors securely. Close the front hood and trunk lid before starting the test.

• Connect a hose to a tap, and spray water on the vehicle. The rate of water spray must be approx. 20 to 25 L (5.3 — 6.6 US gal, 4.4 — 5.5 Imp gal) per minute.

When spraying water on areas adjacent to the floor and wheel house, increase the pressure. When spraying water on areas other than the floor and wheel house, decrease the pressure. But the force of water must be made strong occasionally by pressing the end of the hose.

NOTE:

Be sure to keep the hose at least 10 cm (3.9 in) away from vehicle.

Check the following areas.

• Front window and body framework mating portion
• Door mating portions
• Glass mating portions
• Rear quarter window mating portions
• Rear window and body framework mating portion
• Around roof drips

If any dampness in the compartments is discovered after the water has been applied, carefully check all the areas that may have possibly contributed to the leak.

56.APPEARANCE 2

1) If protective coating (wrap guard) is applied, remove it.

NOTE:

• When removing the wrap guard, using steam will make it easier to remove.

• Vehicle left for a extended periods or at low temperatures, spray the vehicle with water heated 50 — 60°C (122 — 140°F) to raise the surface temperature before peeling off the wrap guard. Do not use the water heated to over 60°C (140°F).

• If the adhesive remains exist on the coated surface, soak a flannel rag, etc. with a small amount of coating wax or solvent such as oil benzene and IPA, put the soaked cloth on the remains lightly, and then wipe them off with a flannel rag etc.

• Keep solvent from touching the resin or rubber parts. Do not use coating wax or solvents while the component surface temperature is hot due to hot weather etc.

• If the coated surface is swollen out due to seams or moisture, expose the vehicle to the sunlight for a few hours or heat the seam and swollen portions using a dryer etc.

• Dispose of the peeled wrap guard as burnable industrial garbage.

2) Check the whole vehicle body for flaking paint, damage by transportation, corrosion, dirt, cracks or blisters.

NOTE:

• It is better to determine an inspection pattern in order to avoid missing an area, since the total inspection area is wide.

• Do not repair the body paint unless absolutely necessary. Also, if the vehicle is in need of repair to remove scratches or corroded paint, the repair area must be limited to the minimum. Re-painting and spray painting must be avoided as much as possible.

3) Check each window glass for scratches carefully. Slight damage may be removed by polishing with cerium oxide. (Fill a cup half with cerium oxide, and add warm water to it. Then agitate the content until it turns to wax. Apply this wax to a soft cloth, and polish the glass with it.)

4) Check each portion of the vehicle body and underside components for the formation of rust. If rust is discovered, remove it with sandpaper of #80 to #180 and treat the surface with rust preventive. After this treatment is completed, flush the portion thoroughly, and prepare the surface for repair painting.

5) Check each portion of body and all of the exterior parts for deformation or distortion. Also, check each light lens for cracks.

6) Peel the protective tape, vinyl wrapping and identification seal attached to the following places.

CAUTION:

Be sure to always peel off the protective film of the SUS plate. Failure to remove the film can result in rust depending on the situation.

• Seat
• Door trim
• Floor carpet
• Side sill
• Front hood lock release lever
• Door mirror
• Front fog light
• SUS plate
• QTR trim

PERIODIC MAINTENANCE SERVICES

PM

		Page
1.	General Description	2
2.	Schedule	3
3.	Engine Oil	5
4.	Engine Oil Filter	8
5.	Spark Plug	9
6.	V-belt	25
7.	Fuel Line	30
8.	Fuel Filter	31
9.	Air Cleaner Element	55
10.	Cooling System	57
11.	Engine Coolant	58
12.	Clutch System	61
13.	Transmission Gear Oil	66
14.	Automatic Transmission Fluid	68
15.	Differential Gear Oil	76
16.	Brake Line	78
17.	Brake Fluid	82
18.	Disc Brake Pad and Disc	83
19.	Parking Brake	85
20.	Suspension	87
21.	Wheel Bearing	91
22.	Axle Boots & Joints	93
23.	Tire Check and Rotation	94
24.	Steering System (Power Steering)	95
25.	A/C Filter	98

1. General Description

A: GENERAL DESCRIPTION

Be sure to perform periodic maintenance in order to maintain vehicle performance and find problems before they occur.

2. Schedule

A: MAINTENANCE SCHEDULE 1

1. U.S. MODELS

		Replacement interval [Number of months or km (miles), whichever occurs first]																		
	Months	3	7.5	15	22.5	30	37.5	45	52.5	60	67.5	75	82.5	90	97.5	105	112.5	120	132	Remarks
	× 1,000 km	4.8	12	24	36	48	60	72	84	96	108	120	132	144	156	168	180	192	220	
	× 1,000 miles	3	7.5	15	22.5	30	37.5	45	52.5	60	67.5	75	82.5	90	97.5	105	112.5	120	132	
1	Engine oil		R	R	R	R	R	R	R	R	R	R	R	R	R	R	R	R	R	
2	Engine oil filter		R	R	R	R	R	R	R	R	R	R	R	R	R	R	R	R	R	
3	Spark plug									R								R		
4	Drive belt(s)					I				I				I				I		
5	Fuel line					I				I				I				I		Note (1)
6	Fuel filter											R								Note (1)
7	Air cleaner element					R				R				R				R		Note (2)
8	Cooling system					I				I				I				I		
9	Engine coolant	Replace after the first 11 years or 220,000 km (137,500 miles), and every six years or 120,000 km (75,000 miles) thereafter																		
10	Clutch system			I		I		I		I		I		I		I		I		
11	Transmission gear oil	Inspect every 24 months or 48,000 km (30,000 miles)																		
12	ATF					I				R				I				R		
13	Rear differential gear oil	Inspect every 12 months or 15,000 km (24,000 miles) Replace every 48 months or 96,000 km (60,000 miles)																		
14	Brake line			I		I		I		I		I		I		I		I		
15	Brake fluid					R				R				R				R		
16	Disc brake pad and disc			I		I		I		I		I		I		I		I		
17	Parking brake			I		I		I		I		I		I		I		I		
18	Suspension			I		I		I		I		I		I		I		I		
19	Wheel bearing									(I)								(I)		
20	Axle boots and joints			I		I		I		I		I		I		I		I		
21	Tire rotation		P	P	P	P	P	P	P	P	P	P	P	P	P	P	P	P	P	Note (3)
22	Steering system (Power steering)			I		I		I		I		I		I		I		I		
23	A/C filter	Replace every 15 months or 15,000 km (24,000 miles)																		Note (4)

Symbol
R: Replace
I: Inspection
P: Perform
(I): Inspections recommended for vehicle safety

NOTE:
1. This inspection is not necessary to observe exhaust gas regulations or is the responsibility of the manufacturer under the current basic EPA regulations that must observed by law.
2. Replace the air cleaner element more frequently than the periodic replacement if the vehicle is being used in an excessively dusty environment.
3. Replace the tires if the tread-wear indicator has cause a bar-shaped cut across the tread. The indicator will appear when the remaining amount of tread is less than 1.6 mm (0.063 in).
4. Replace the A/C filter more frequently than the periodic replacement if the vehicle is being used in an excessively dusty environment.

B: MAINTENANCE SCHEDULE 2

Item	Maintenance interval	Repeat short distance driving	Repeat driving on bumpy muddy road	Driving in extremely cold weather	Area where salt or other corro-sive substance used, or coastal area	High humidity or mountain area
Engine oil	Every 3.75 months	R		R		
	6,000 km					
	3,750 miles					
Engine oil filter	Every 3.75 months	R		R		
	6,000 km					
	3,750 miles					
Fuel line	Every 7.5 months				I	
	Every 12,000 km					
	Every 7,500 miles					
Brake line	Every 7.5 months	I	I		I	
	Every 12,000 km					
	Every 7,500 miles					
Brake fluid	Every 15 months					R
	Every 24,000 km					
	Every 15,000 miles					
Disc brake pad and disc	Every 7.5 months	I	I		I	
	Every 12,000 km					
	Every 7,500 miles					
Parking brake	Every 7.5 months	I	I		I	
	Every 12,000 km					
	Every 7,500 miles					
Suspension	Every 7.5 months		I	I	I	
	Every 12,000 km					
	Every 7,500 miles					
Axle boots and joints	Every 7.5 months	I	I	I	I	
	Every 12,000 km					
	Every 7,500 miles					
Steering system (Power steering)	Every 7.5 months		I	I	I	
	Every 12,000 km					
	Every 7,500 miles					

R: Replace
I: Inspection

3. Engine Oil

A: INSPECTION

CAUTION:
If the engine oil is spilt over exhaust pipe or the under cover, wipe it off with cloth to avoid emitting smoke or causing a fire.

1) Park the vehicle on a level surface.
2) Remove the oil level gauge and wipe away the oil.
3) Reinsert the oil level gauge all the way. Be sure that the oil level gauge is correctly inserted and properly orientated.
4) Pull out the oil level gauge again, and check both sides of the oil level gauge. Use a lower side to determine the engine oil level. If the engine oil level is below “L” mark, check for oil leakage from engine and add oil to bring the level up to “F” mark.
5) Start the engine to circulate the oil in engine.
6) After turning off the engine, wait five minutes or more for the oil to return to the oil pan before checking the oil level.

NOTE:
- To prevent overfilling of engine oil, do not add oil above “F” mark when the engine is cold.
- As the oil level gauge is used for daily maintenance, “F” mark and “L” mark is set assuming that the engine is cold.

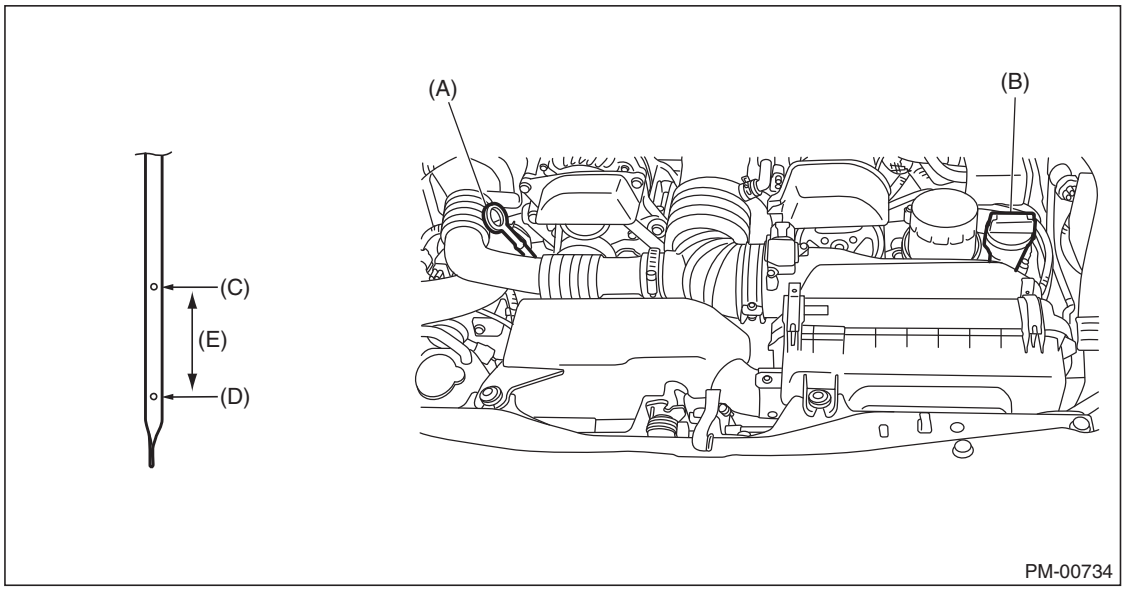

(A) Oil level gauge
(B) Oil filler cap
(C) “F” mark
(D) “L” mark
(E) Approx. 1.0 L (1.1 US qt, 0.9 Imp qt)

B: REPLACEMENT

CAUTION:
If the engine oil is spilt over exhaust pipe or the under cover, wipe it off with cloth to avoid emitting smoke or causing a fire.

1) Open the oil filler cap for quick draining of engine oil.
2) Lift up the vehicle.
3) Drain engine oil by loosening the drain plug.

NOTE:
Prepare the container for draining of engine oil.

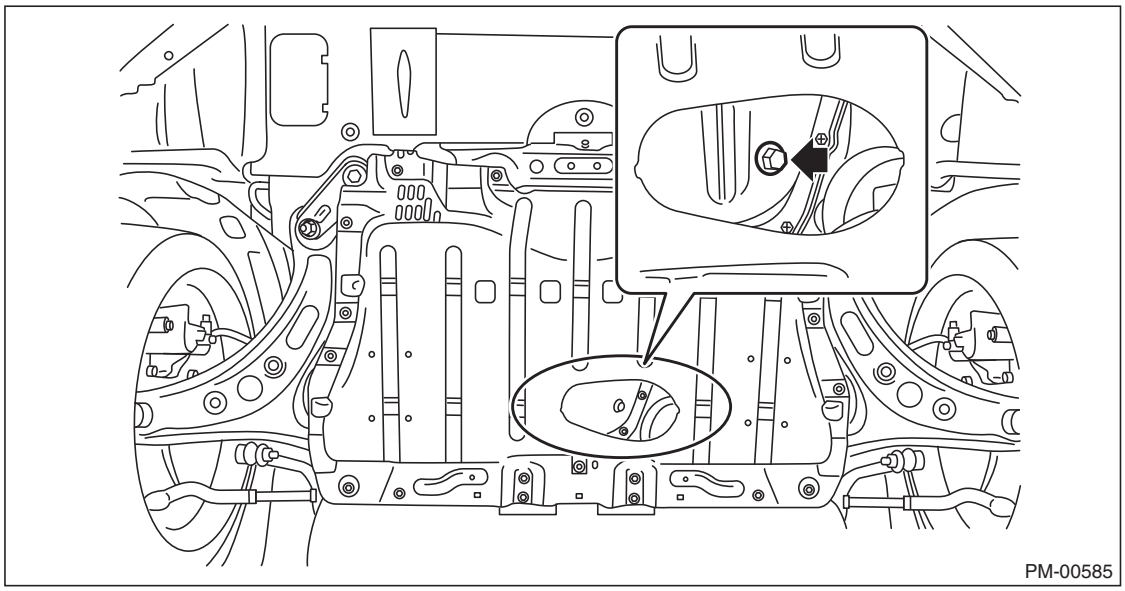

4) After draining the engine oil, tighten the engine oil drain plug.

NOTE:
Use a new drain plug gasket.

Tightening torque:
39.2 N·m (4.0 kgf-m, 28.9 ft-lb)

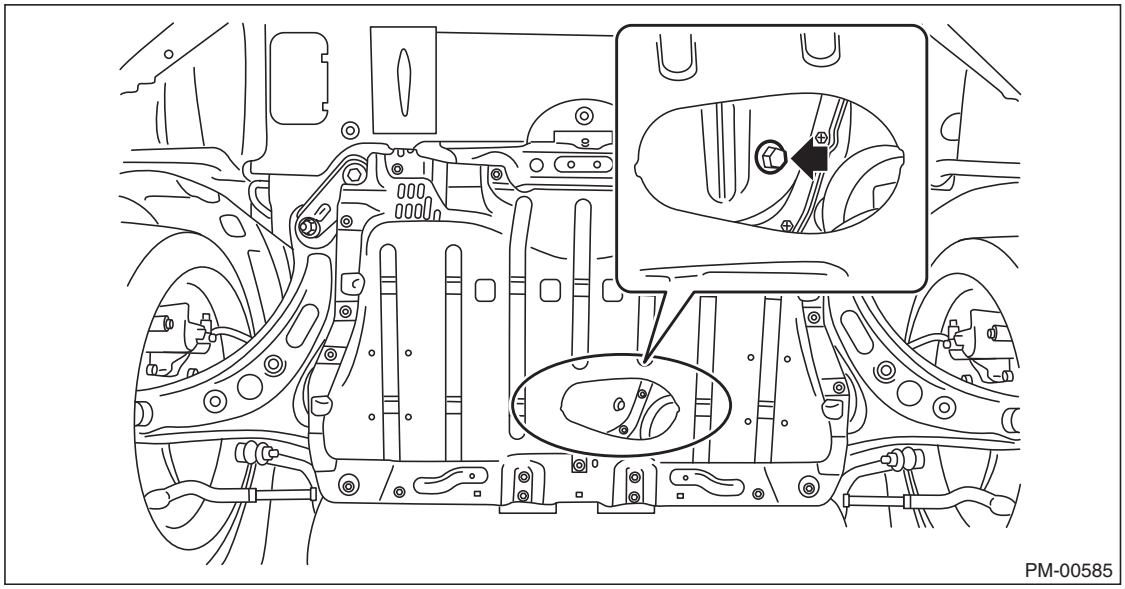

5) Lower the vehicle.
6) Select engine oil of adequate quality and viscosity and fill it through the oil filler duct to the “F” mark on the oil level gauge. Make sure that the vehicle is parked on a level surface when checking oil level.

Recommended oil:
Refer to “RM” section. <Ref. to RM-2, LUBRICANTS, RECOMMENDED MATERIALS, Recommended Materials.>

Engine oil capacity:
Refer to the “SPC” section. <Ref. to SPC-4, CAPACITY, BRZ.>
7) Close the oil filler cap.
8) Start the engine to circulate the oil in engine.
9) After stopping the engine, recheck the oil level. If necessary, add engine oil up to the “F” mark on oil level gauge.

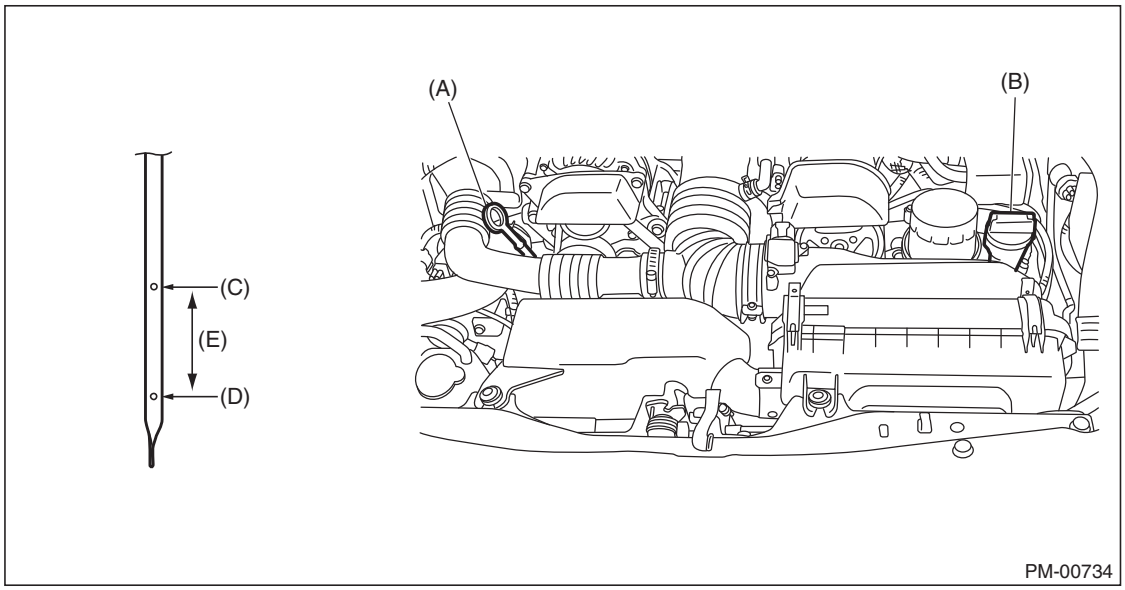

(A) Oil level gauge
(B) Oil filler cap
(C) “F” mark
(D) “L” mark
(E) Approx. 1.0 L (1.1 US qt, 0.9 Imp qt)

4. Engine Oil Filter

A: REPLACEMENT

CAUTION:
If the engine oil is spilt over exhaust pipe or the under cover, wipe it off with cloth to avoid emitting smoke or causing a fire.

1) Remove the oil filter using an oil filter wrench.

NOTE:
- Clean off water or dust from the oil element mating surface using air.
- Use an oil filter wrench with a size of 80 mm (3.15 in).

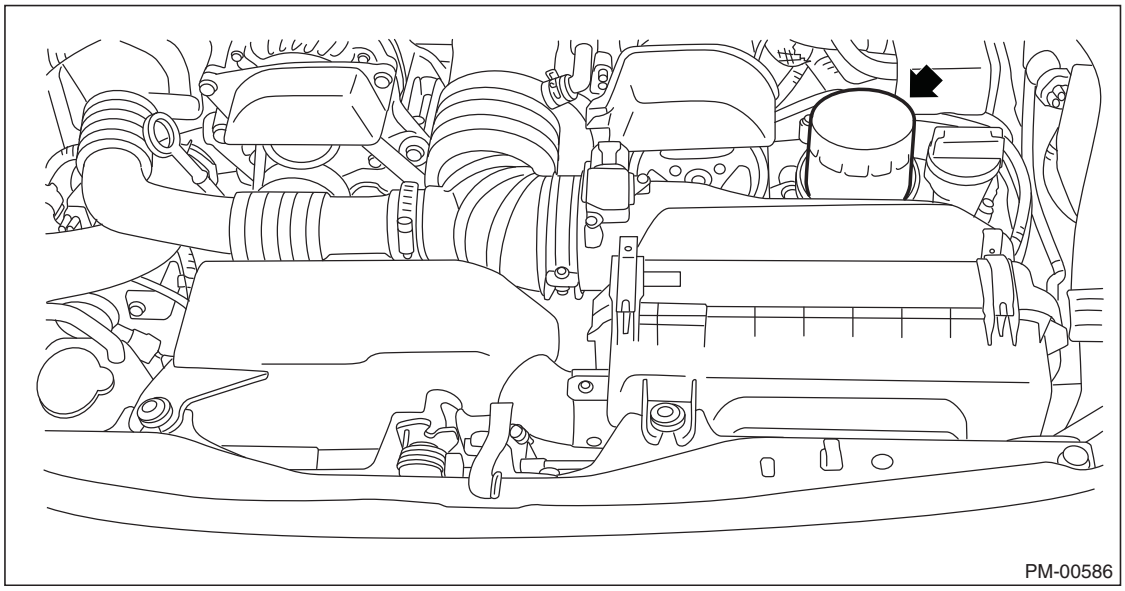

2) Clean the oil filter installing surface on the chain cover.
3) Obtain a new oil filter and apply a thin coat of engine oil to the seal rubber.
4) Install the oil filter turning it by hand, being careful not to damage the seal rubber of the oil filter.
5) Tighten more (approx. 3/4 turn) after the seal rubber contacts the chain cover. When using a torque wrench, tighten to 14 N·m (1.4 kgf-m, 10.3 ft-lb).

CAUTION:
Do not tighten excessively, or oil may leak.

6) After installing, check the engine oil level and replenish it if necessary.

5. Spark Plug

A: REPLACEMENT

1. REMOVAL

1) Disconnect the ground cable from battery.

CAUTION:
Disconnect the ground cable from the battery with the driver's and the passenger's doors open (with the glass lowered to a position where the door can be opened/closed with no problems). This is to prevent molding damage that occurs when opening/closing a door with the glass fully closed and the ground cable disconnected due to the power window index function that slightly opens/closes the glass in conjunction with opening/closing doors.

2) Remove the air cleaner assembly w/hose.
   (1) Disconnect the connector of the mass air flow and intake air temperature sensor, and remove the one clip that holds the harness.
   (2) Slide the hose clip and disconnect ventilation hose No. 1.
   (3) Loosen the two hose clamps.
   (4) Remove the three bolts to remove the air cleaner assembly w/hose.

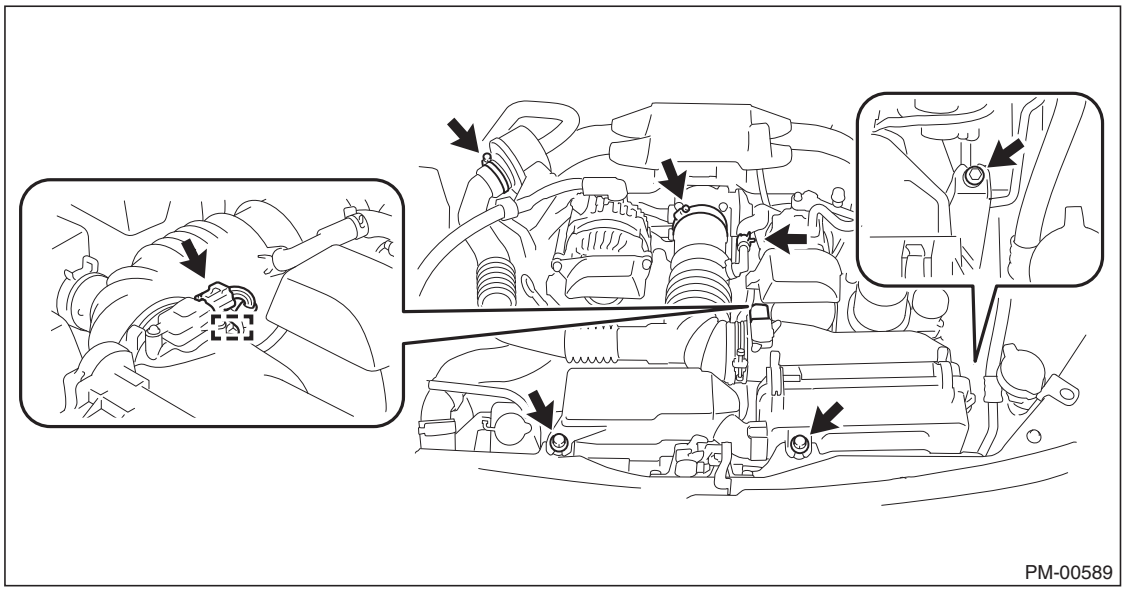

3) Disconnect the hose assembly from the sound creator.
4) Remove the two bolts and remove the sound creator.

5) Disconnect the front oxygen (A/F) sensor connector (A) and rear oxygen sensor connector (B).

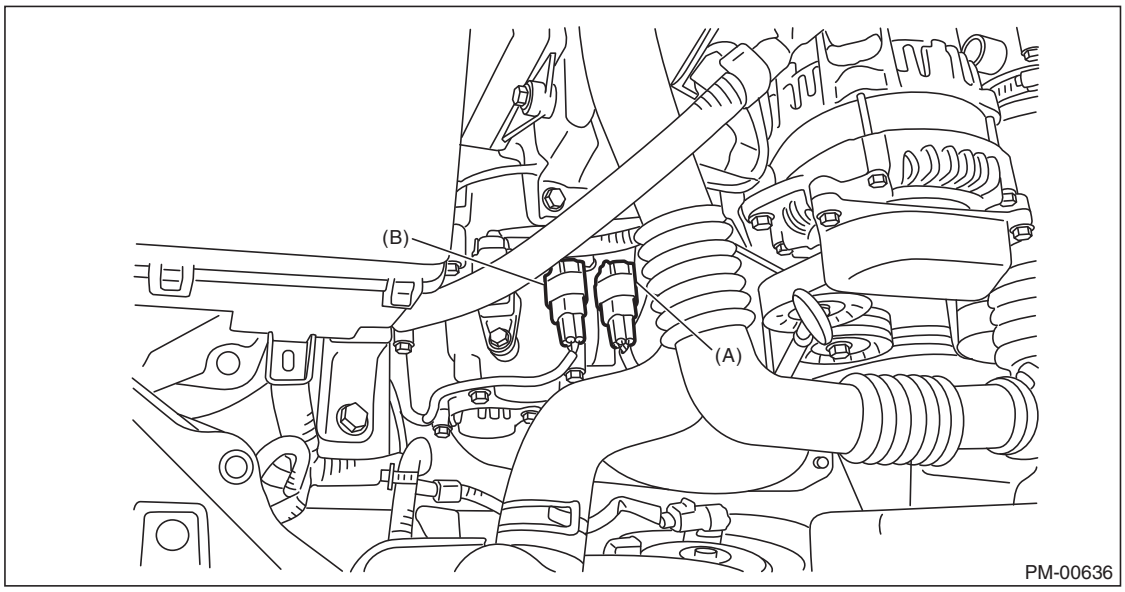

6) Remove the two bolts securing the harness of the front oxygen (A/F) sensor, and remove the two clips from the stay.

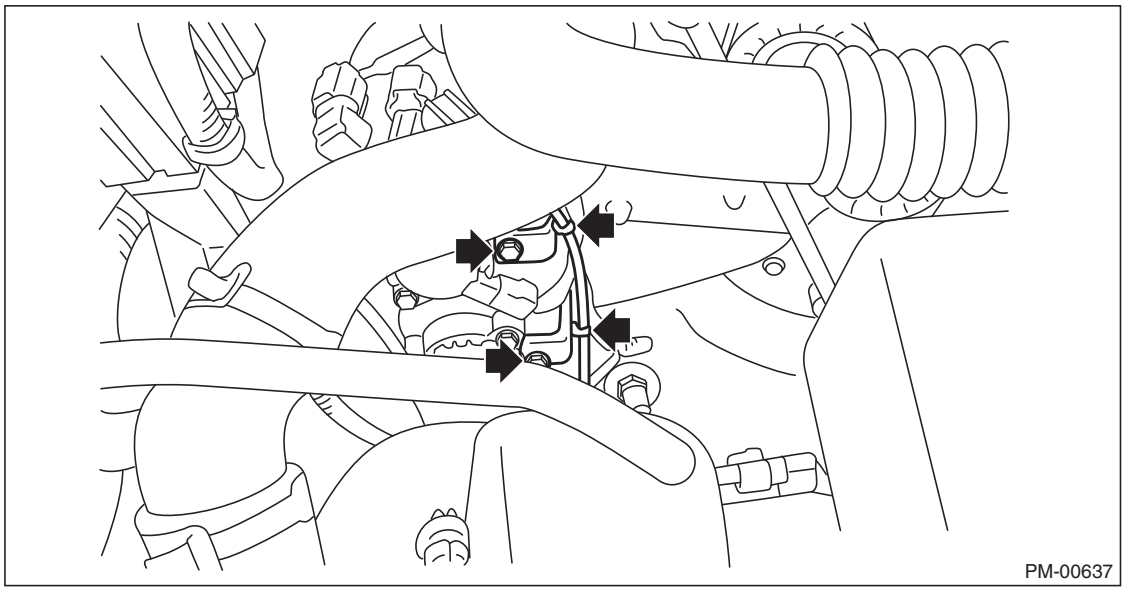

7) Remove the two clips securing the rear oxygen (A/F) sensor harness.
8) Lift up the vehicle.

9) Remove the 12 bolts and seven clips to remove engine under cover No. 1.

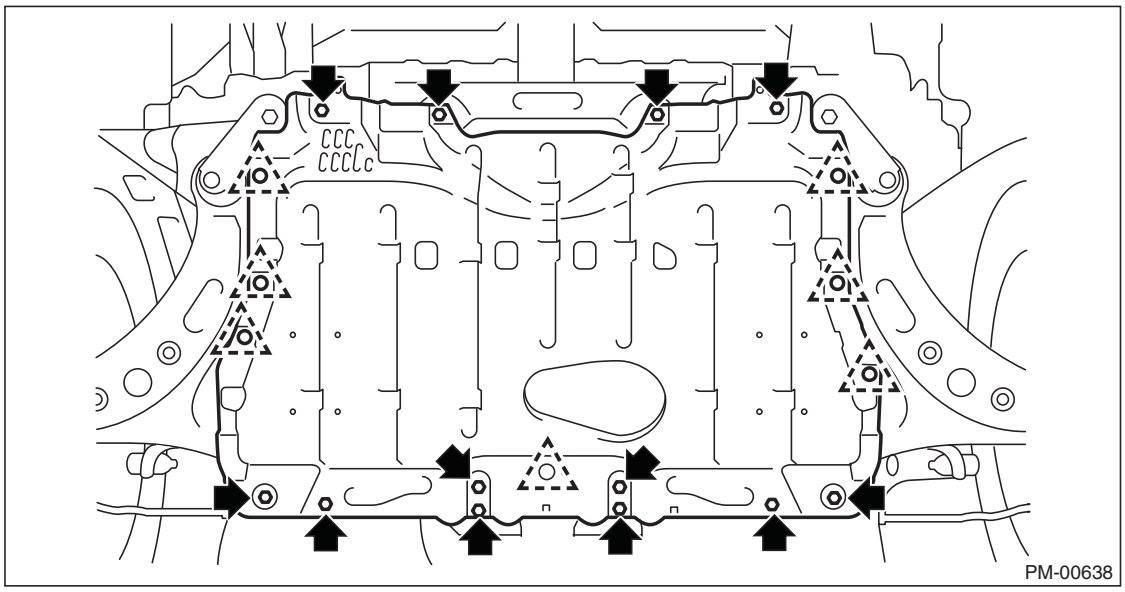

10) Remove the seven bolts to remove engine under cover No. 2.

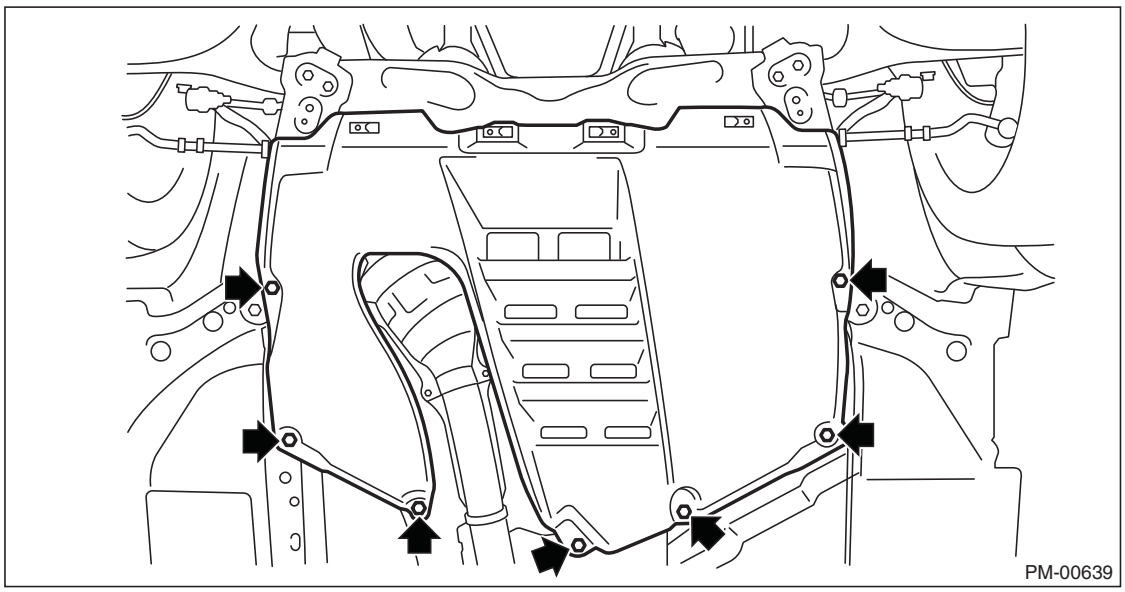

11) Remove the three clips to remove the front mat guard under RH.

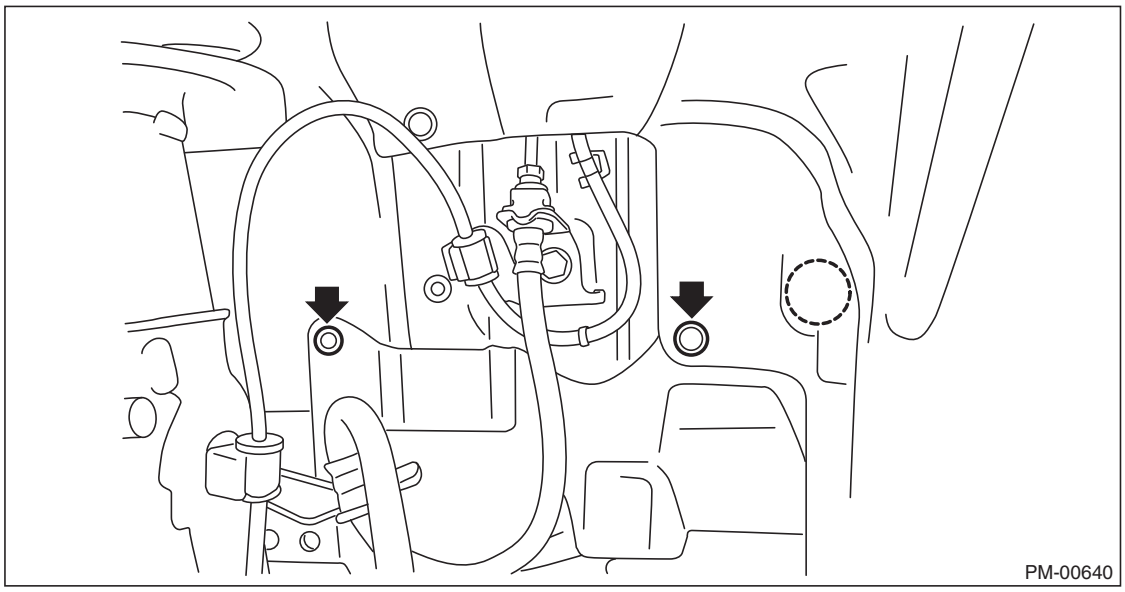

12) Remove the two nuts and disconnect the joint pipe.

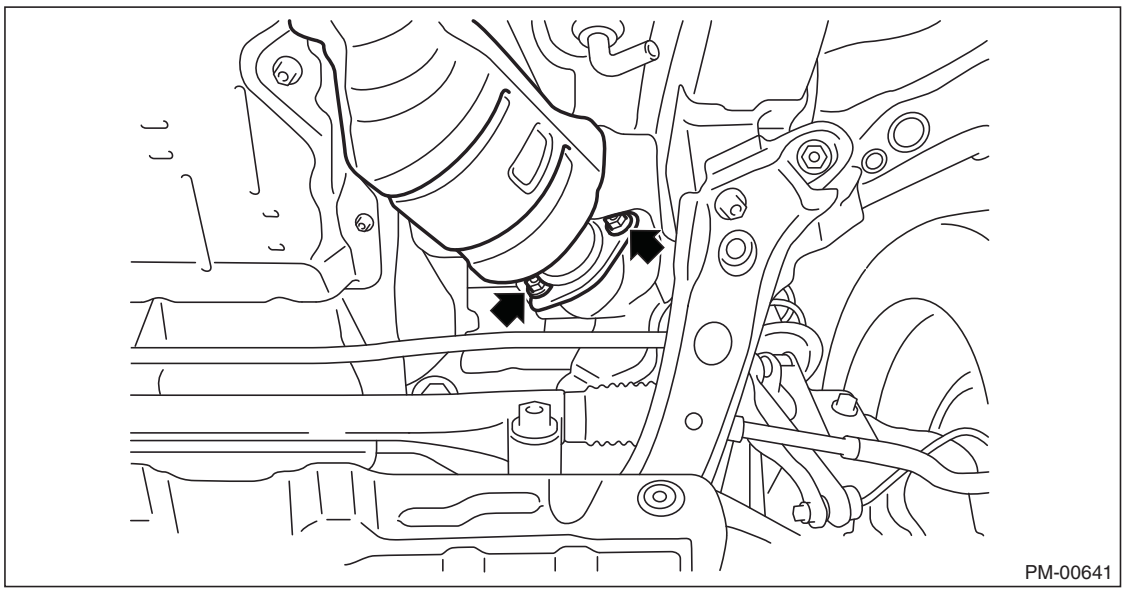

13) Remove the two nuts, two bolts and two compression springs to disconnect the exhaust center pipe assembly.

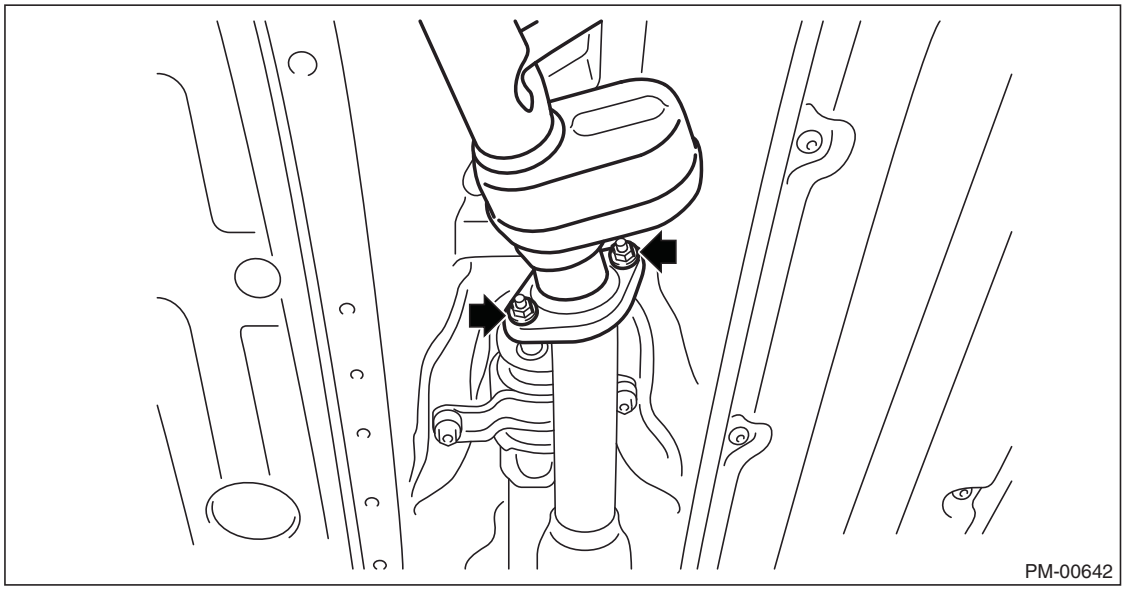

14) Remove the bolt to remove the exhaust pipe assembly FR.

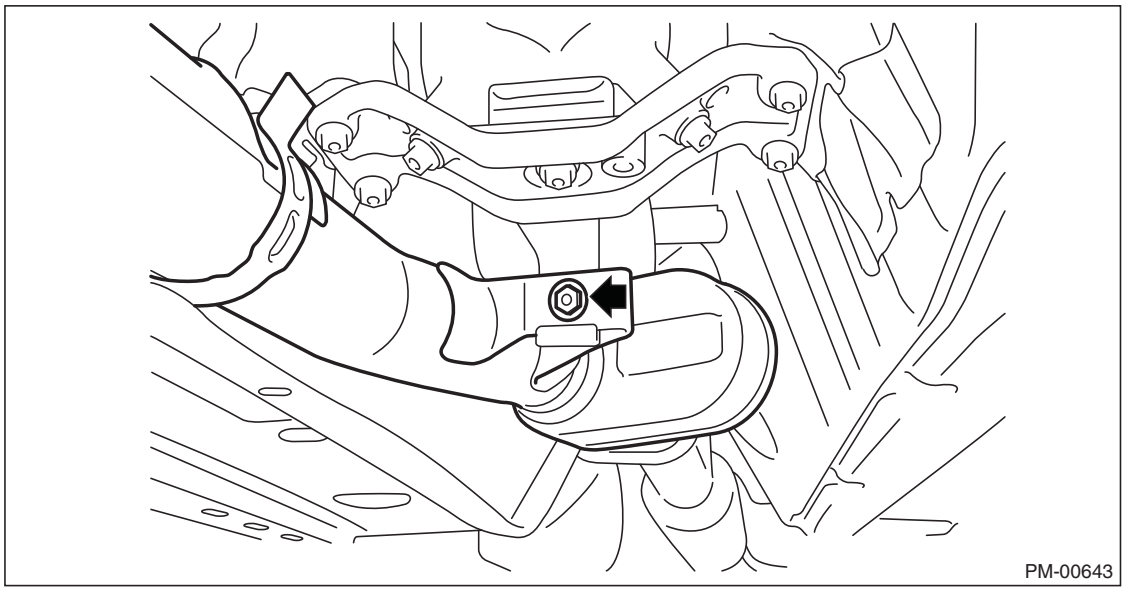

15) Remove the two nuts and disconnect the joint pipe.

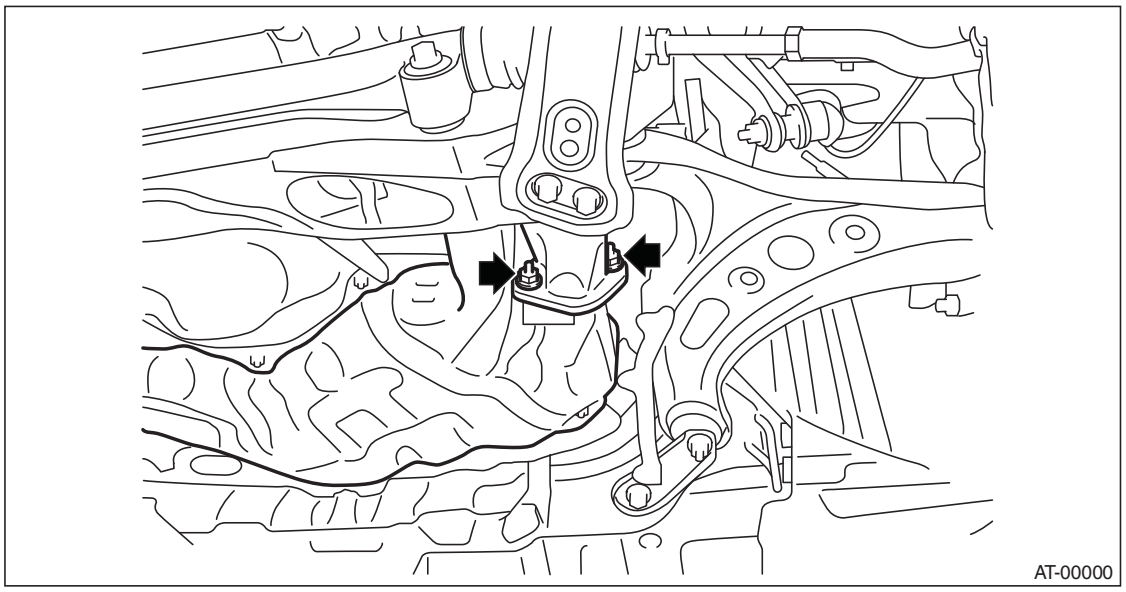

16) Remove the six nuts to remove the exhaust manifold sub-assembly.

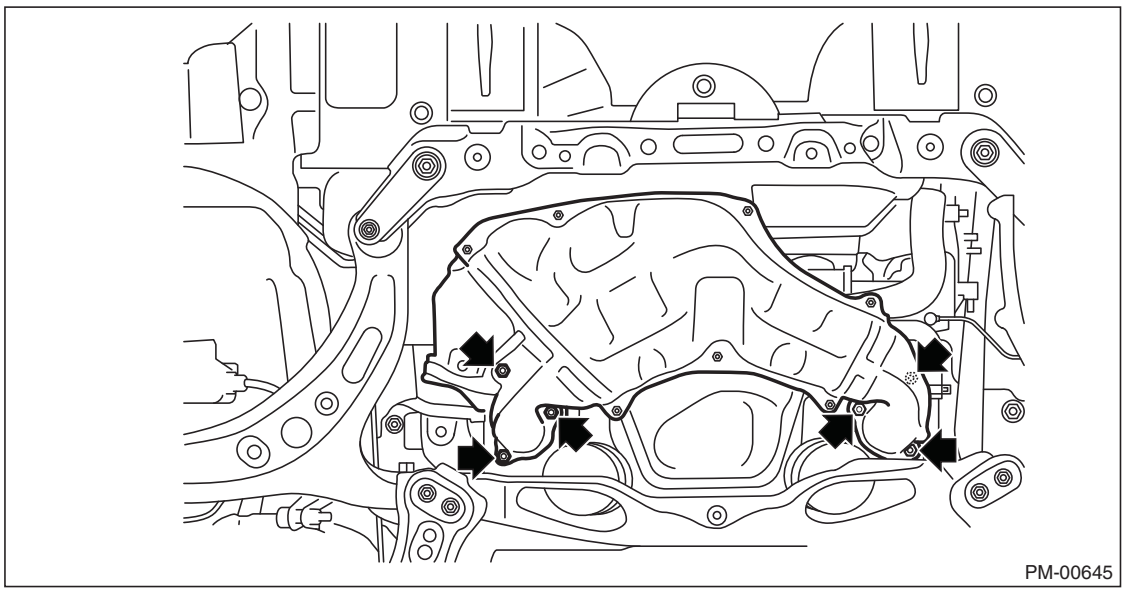

17) Tie the joint pipe to the front crossmember using string.

CAUTION:
This procedure is necessary to prevent the joint pipe from falling off.

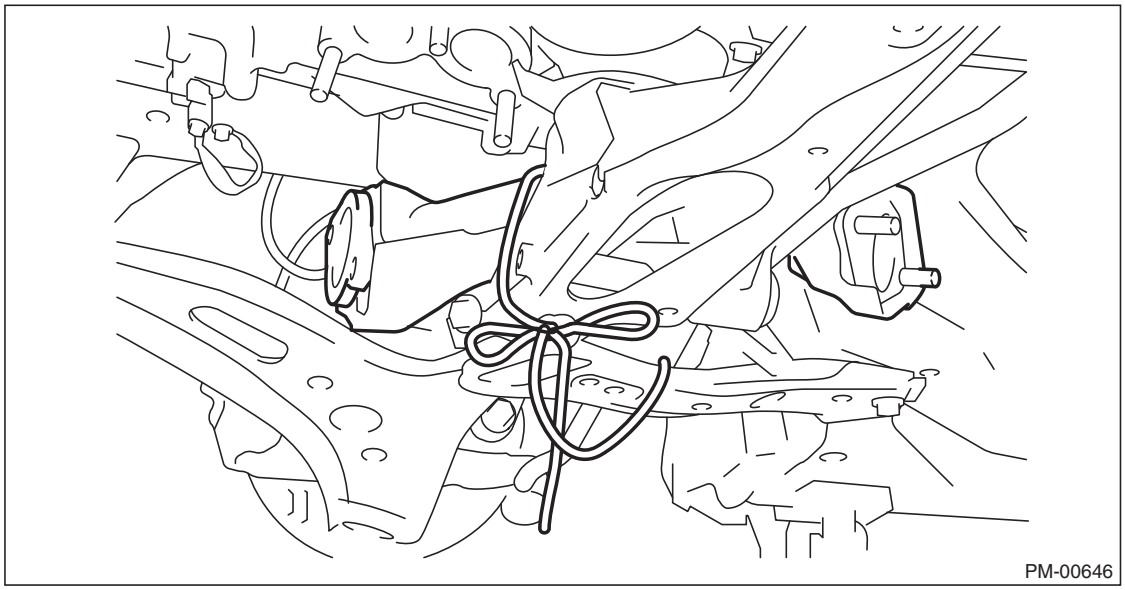

18) Remove the nuts which secure the engine mounting to the front crossmember.

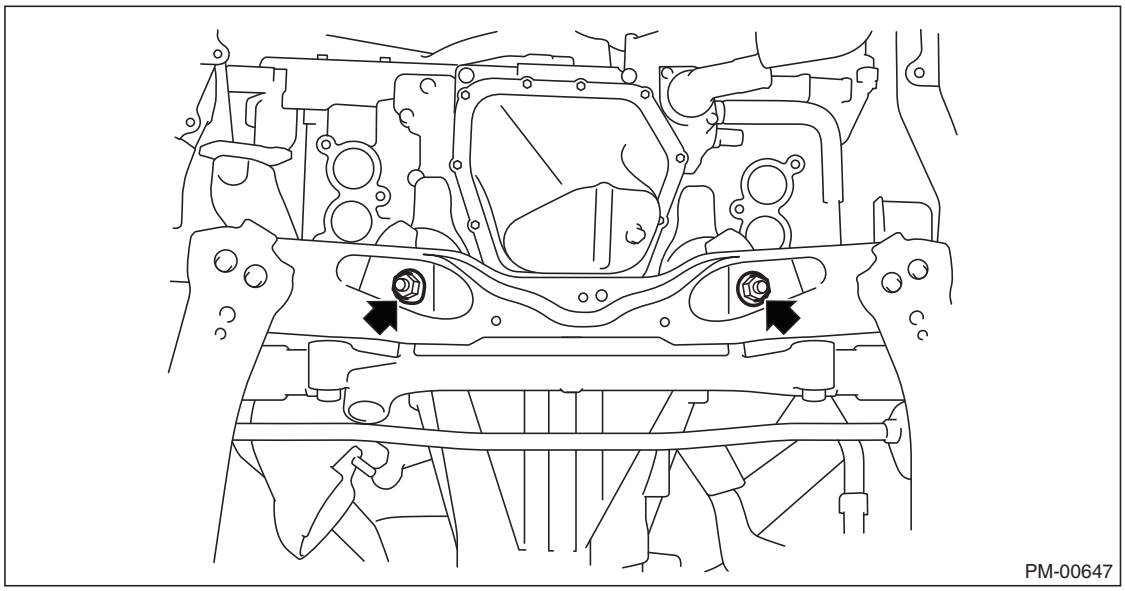

19) Lower the vehicle.

20) Remove clip (A) securing the engine harness to the engine hanger, clip (B) securing the battery cable and clip (C) securing the generator cable to the intake manifold protector RH, and clip (D) securing the generator cable to the fuse box.

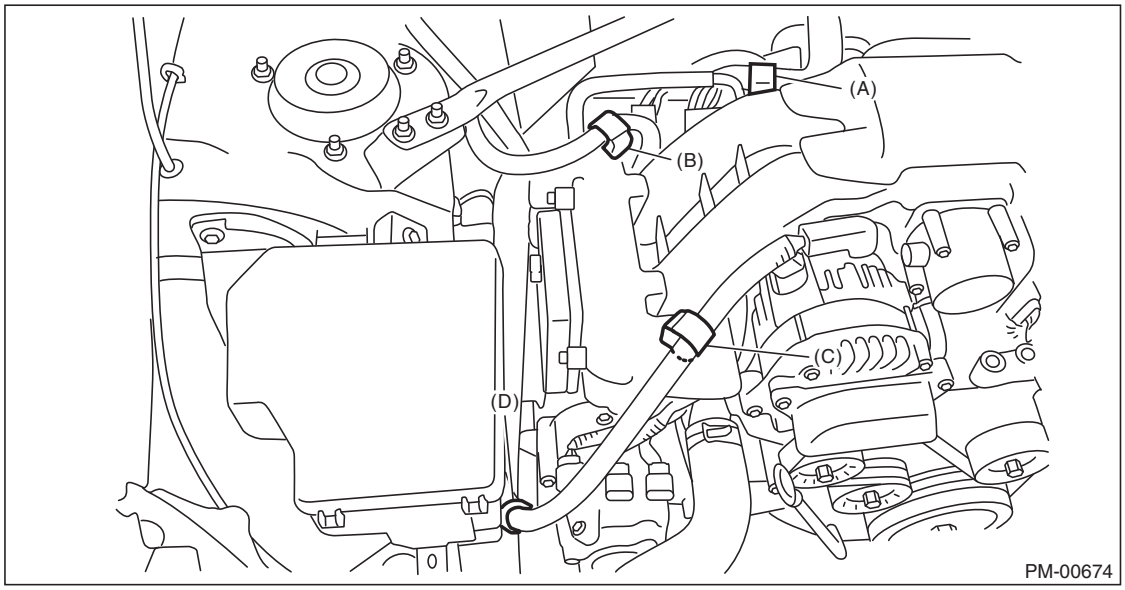

21) Remove the bolt securing the harness stay from the intake manifold protector LH, and the two clips securing the battery cable from the intake manifold.

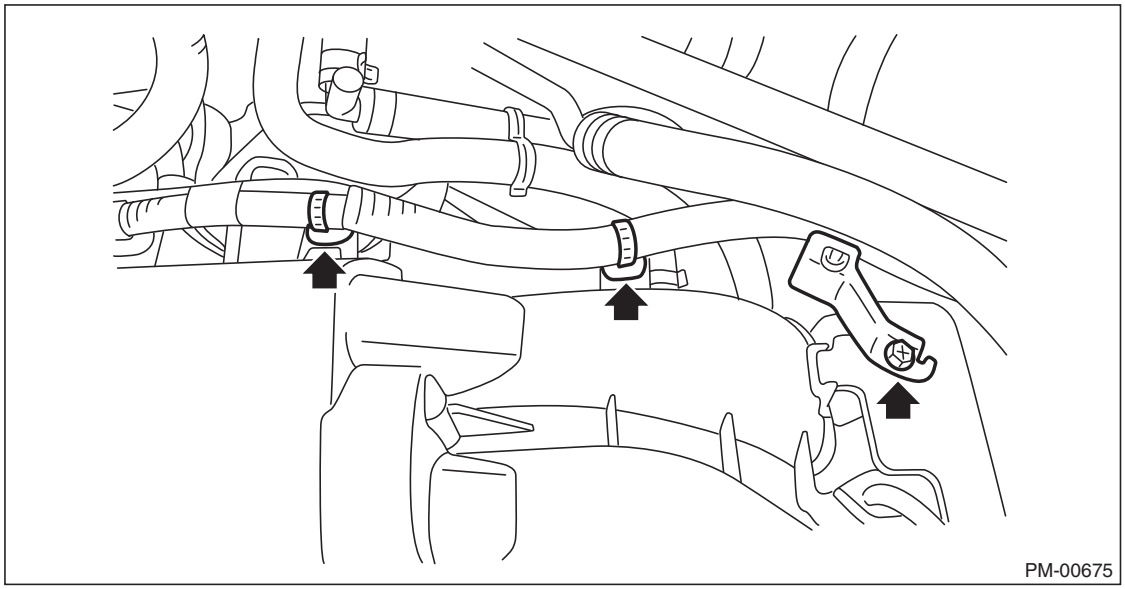

22) Install the ST1 and ST2 to the engine assembly.

Tightening torque:
43 N·m (4.4 kgf-m, 31.7 ft-lb)

ST1 12281-38150 ENGINE HANGER NO. 1
ST2 90119-14120 BOLT

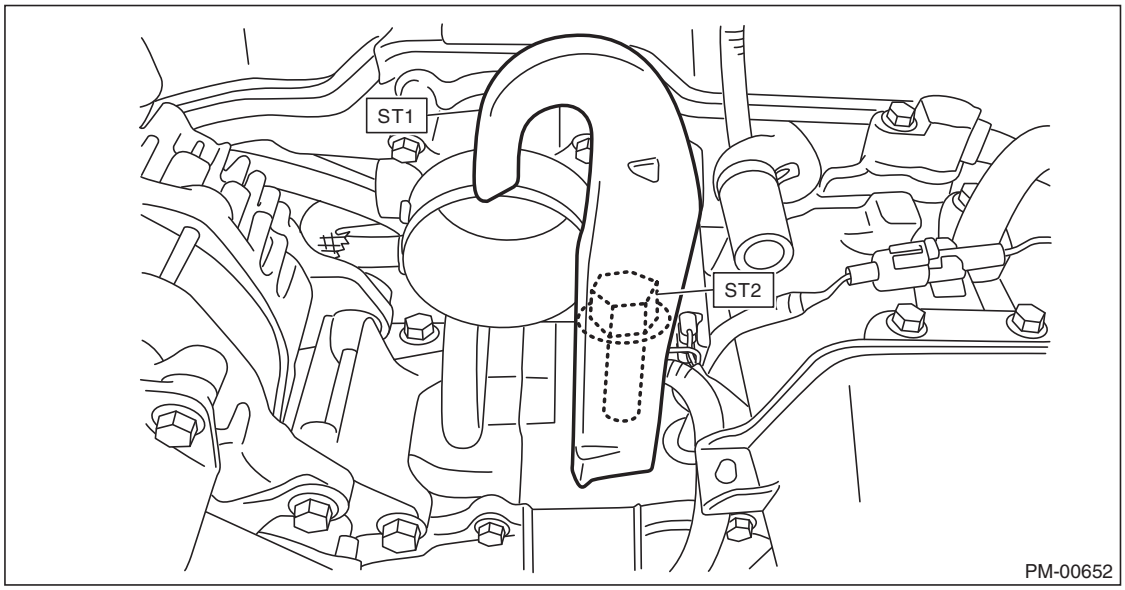

23) Remove the clip securing the bulkhead harness to the vehicle.

- Left Hand

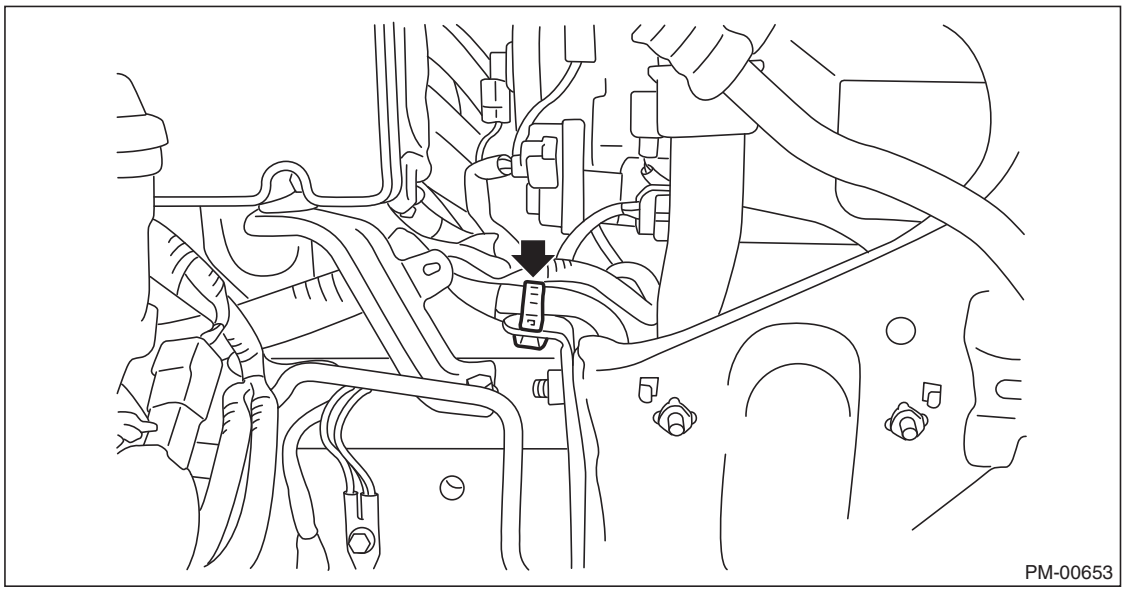

- Right Hand

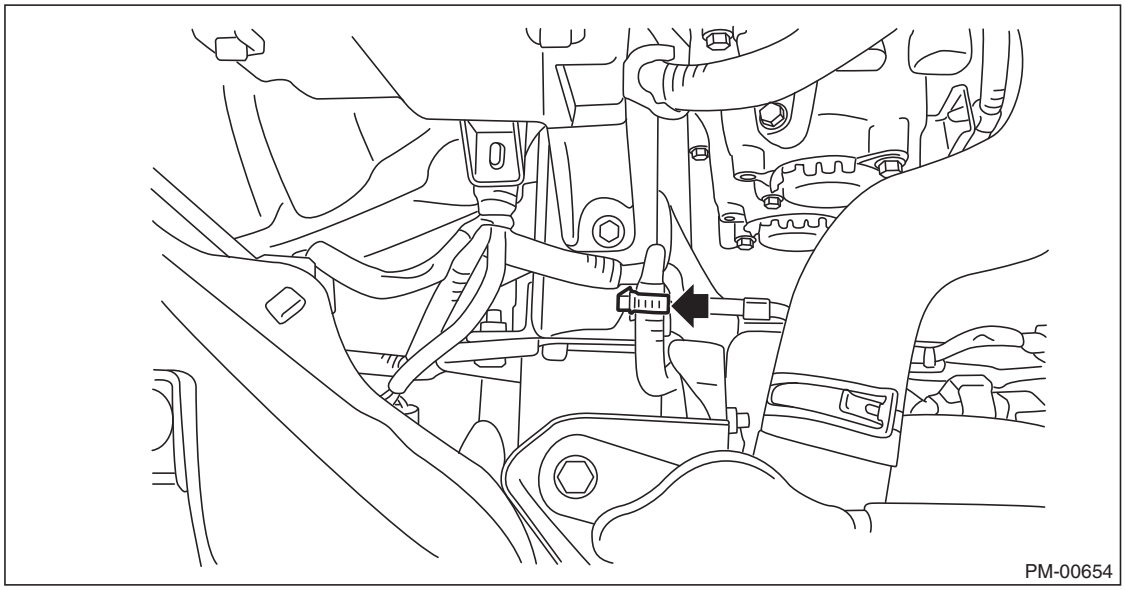

24) Set the ST1 and ST2 to vehicle in order to support the engine.
ST1 99099AJ000 ENGINE HANGER
ST2 18679AA020 ADJUSTER

CAUTION:
- **Set the ST on the vehicle being careful not to pinch the harness.**
- **Use a shackle with the load capacity of 250 kg (551 lb) or more.**

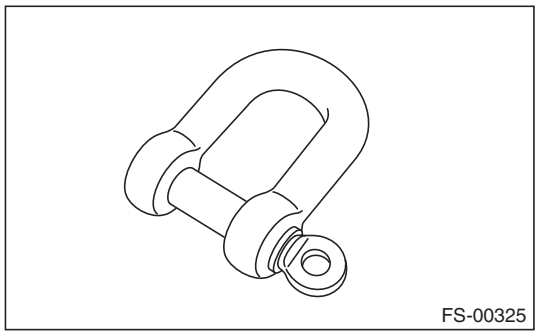

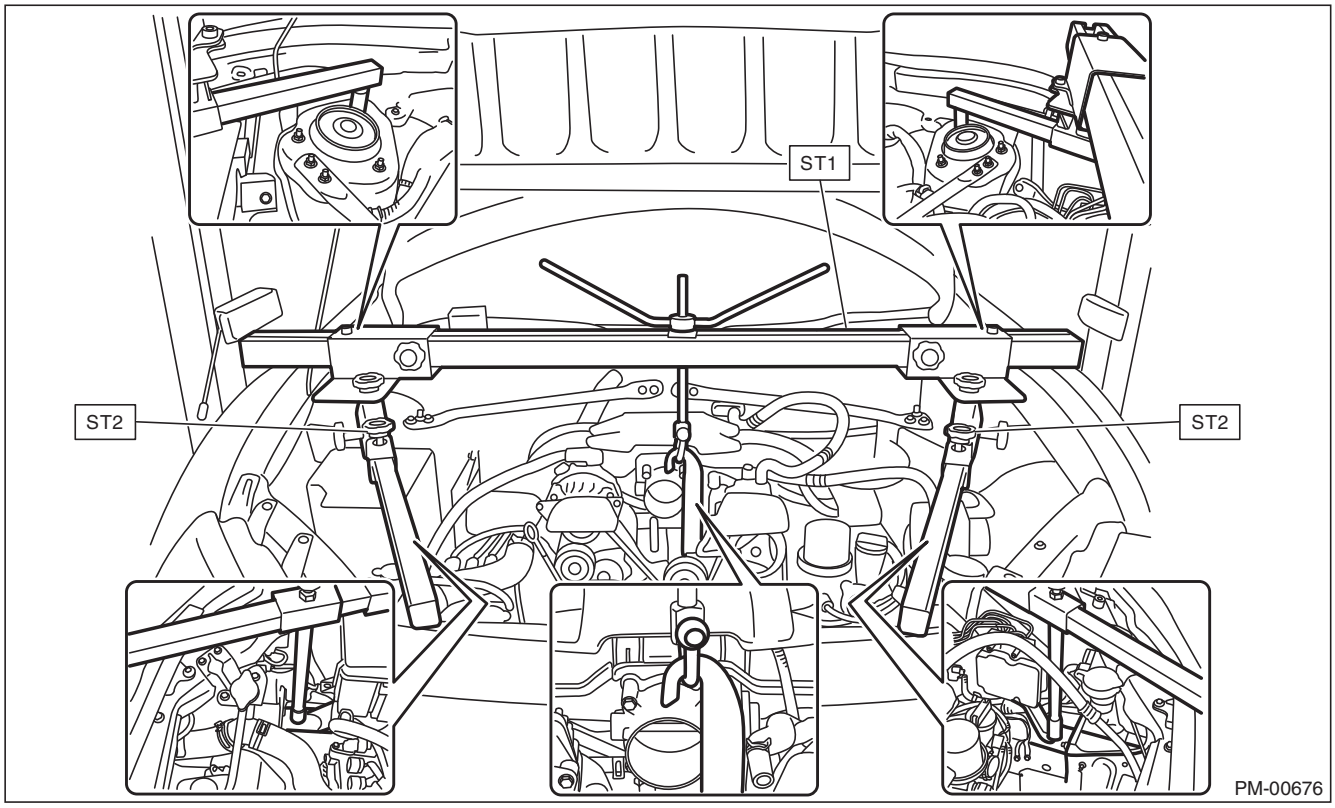

25) Turn the handle on the top of the ST clockwise, and slowly lift the engine from the crossmember engine mount hole until it reaches the position where the engine mount stud bolts can be removed.

CAUTION:
- **Apply grease or other lubricant to the ST threading before turning the handle to prevent the ST threading from being damaged.**
- **Lift the engine slowly being careful of parts clearance so that parts are not damaged by touching each other.**
- **Lift the engine until the intake manifold (#4) and air conditioner suction hose are slightly contacting each other.**
- **Place soft cloth between the intake manifold (#4) and air conditioner suction hose to protect them from damage.**

26) Lift up the vehicle.

27) Install the ST between the engine mount and crossmember.
ST 18632AA020 STAND ASSY

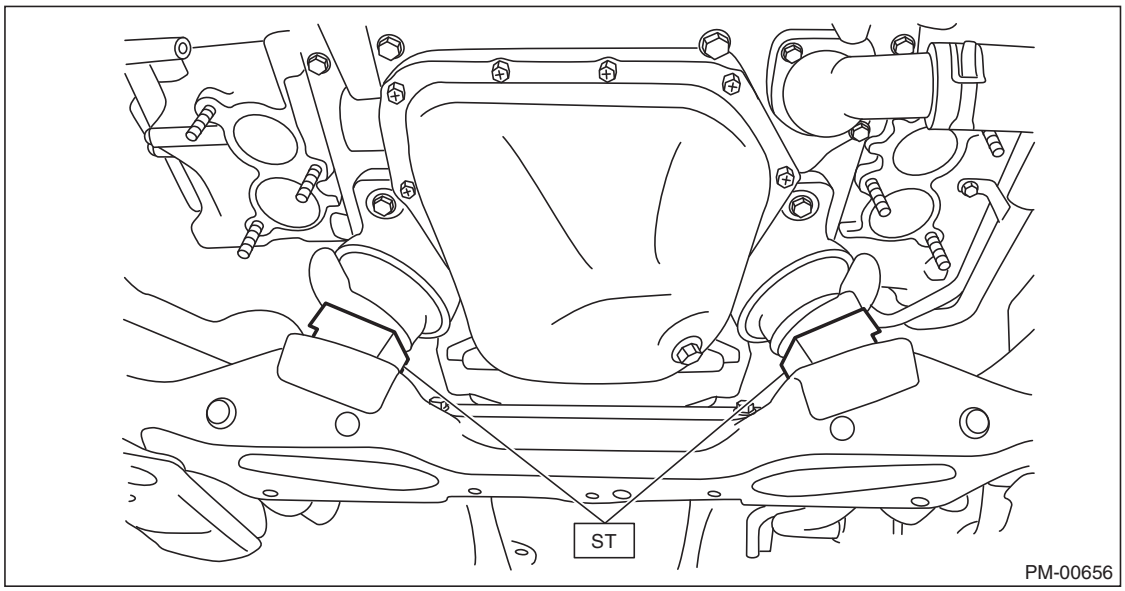

28) Lower the vehicle.
29) Rotate the handle on the top of the ST counterclockwise to slowly lower the engine.
30) Remove the ST (ENGINE HANGER) from the vehicle.
31) Remove the RH spark plugs.
(1) Move the lock lever in the direction of the arrow to release the three connector locks.
(2) Disconnect the four connectors from the fuel injector CM.

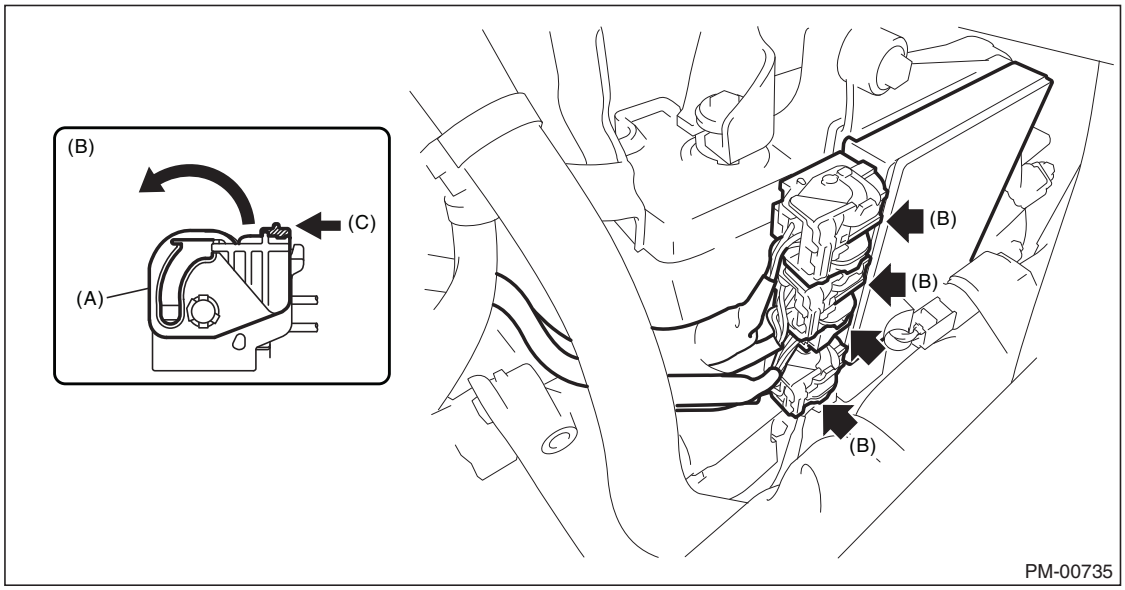

(A) Lock lever
(B) Connector with lock
(C) Unlock

(3) Remove the three bolts and the fuel injector CM.

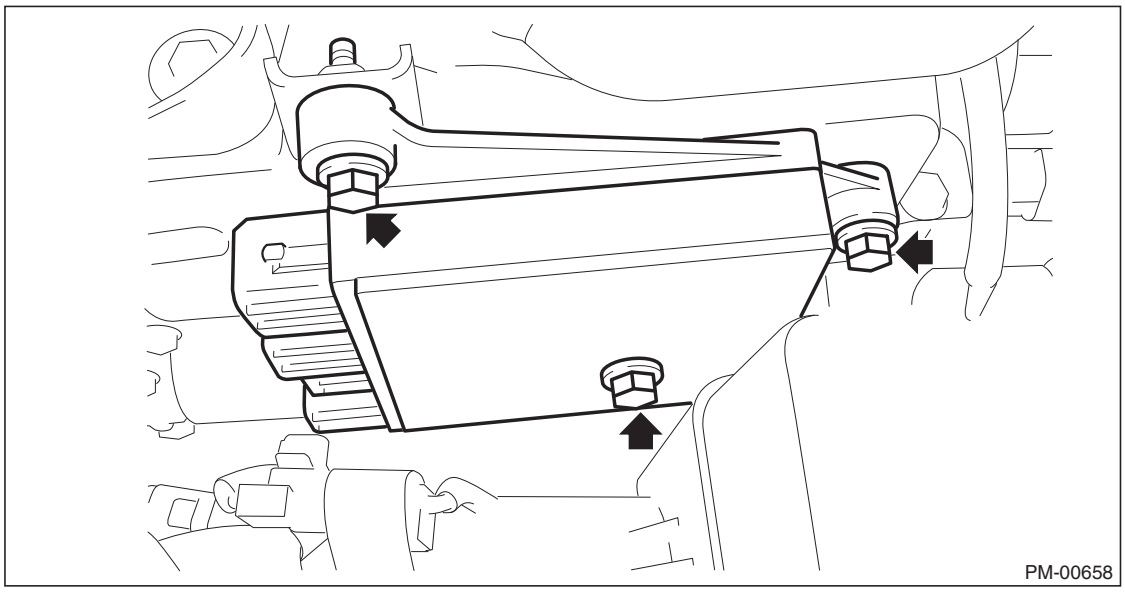

(4) Disconnect the ignition coil connector and remove the ignition coil.

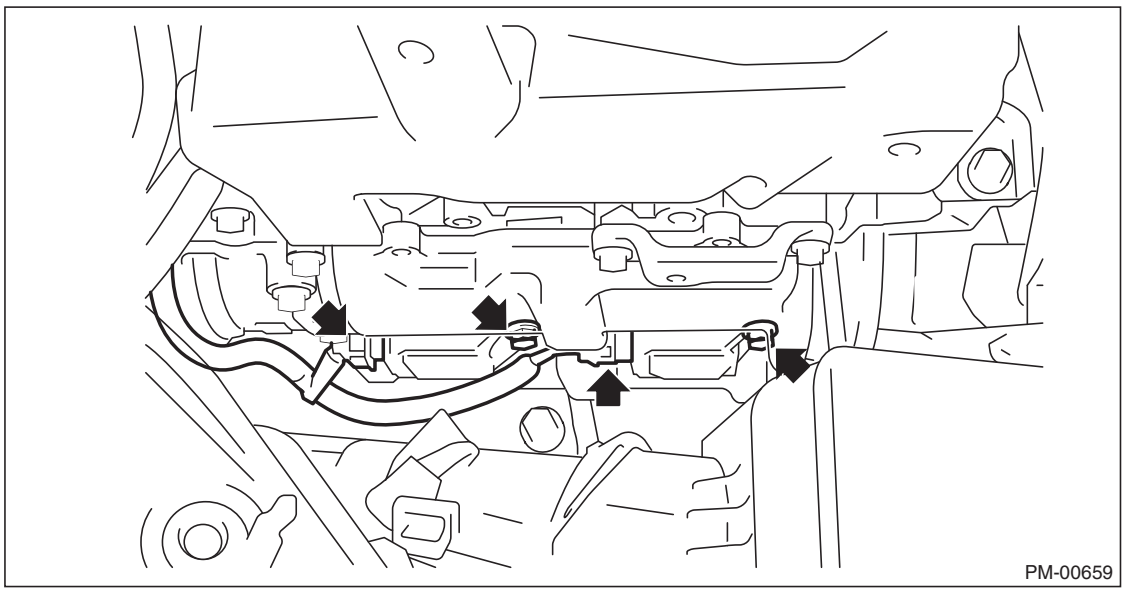

(5) Remove the spark plug with a spark plug socket.

32) Remove the LH spark plugs.
(1) Remove the bracket securing the fuel hose.

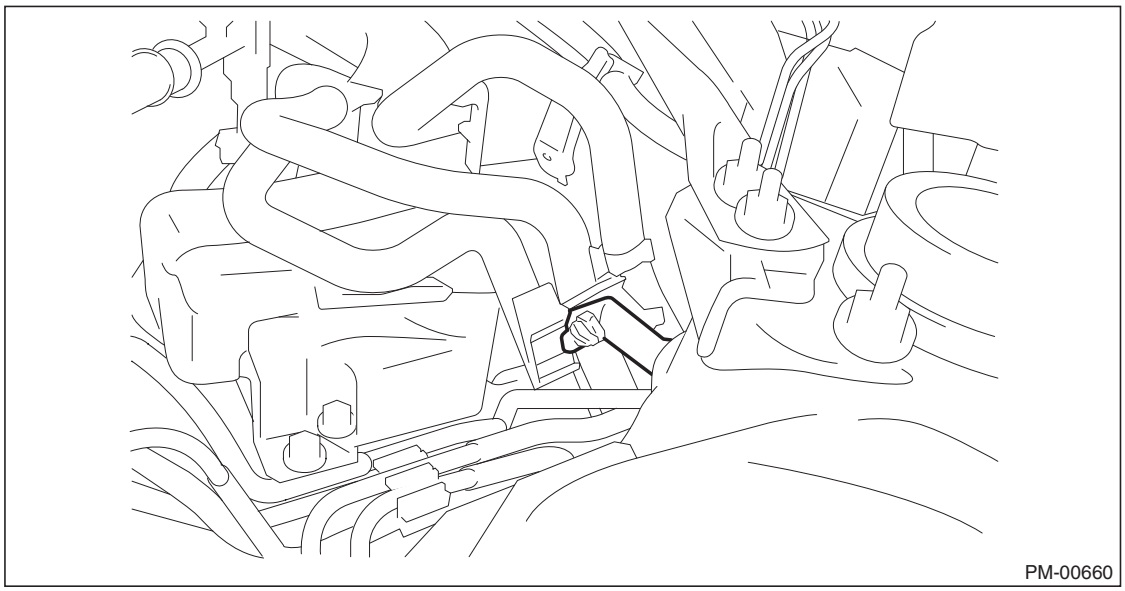

(2) Remove the two bolts and collision protector LH.

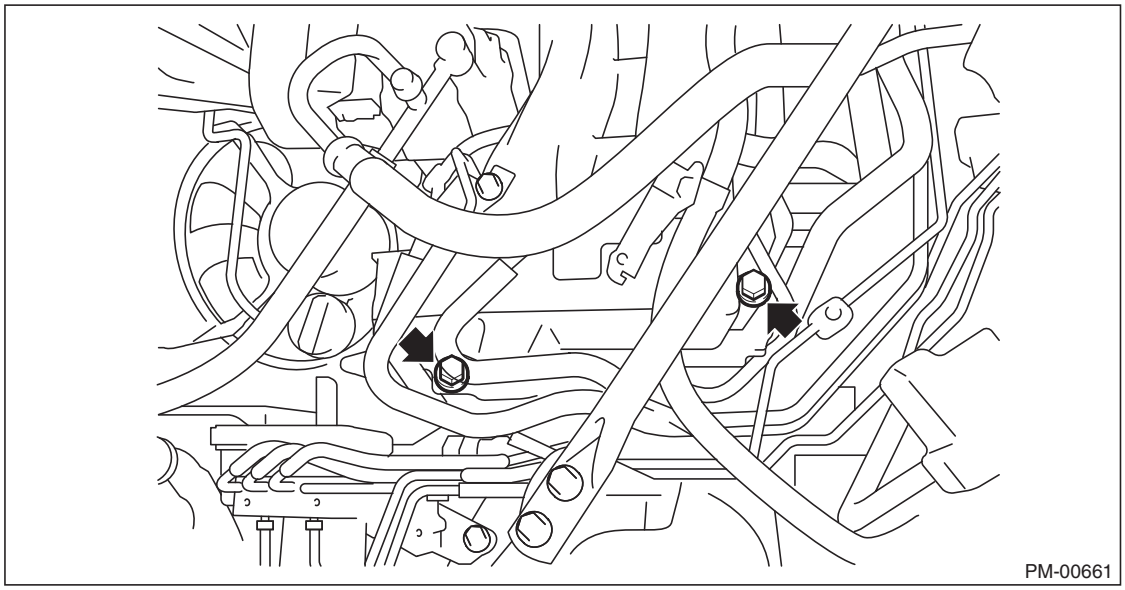

(3) Disconnect the ignition coil connector and remove the ignition coil.

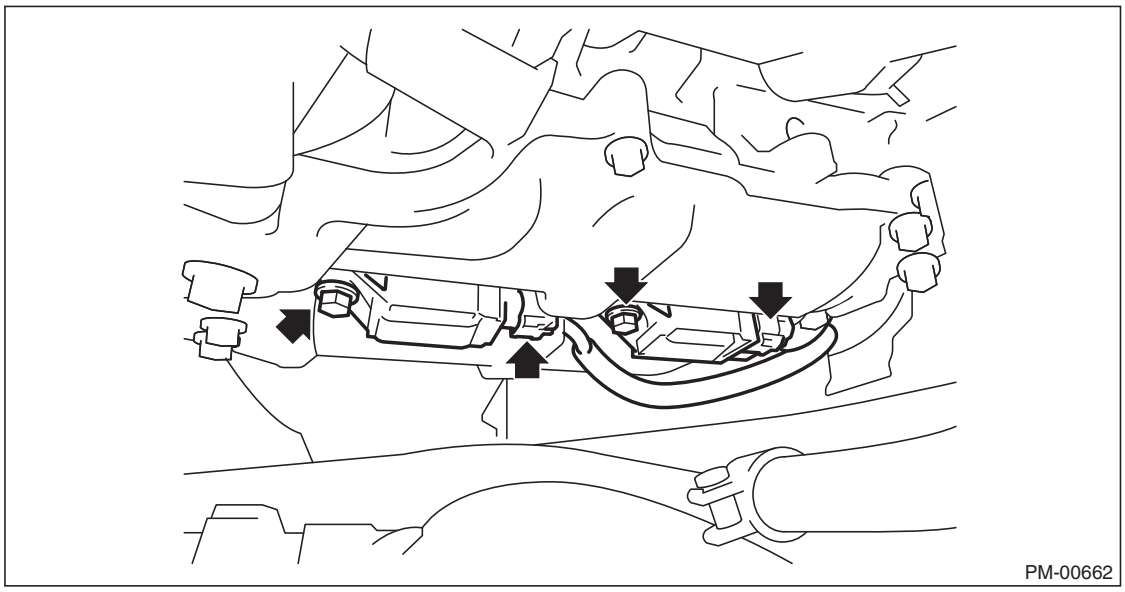

(4) Remove the spark plug with a spark plug socket.

2. INSTALLATION

Install in the reverse order of removal.

CAUTION:
- **Before installation, degrease the ignition coil installation parts and mounting bolts.**
- **After all installation, check adjustment of the AT shift lever because all engine mounting bolts are removed in 18).**

NOTE:
Use a new gasket.

Tightening torque (Spark plug):
17 N·m (1.7 kgf-m, 12.5 ft-lb)

Tightening torque (Ignition coil):
8.5 N·m (0.9 kgf-m, 6.3 ft-lb)

Tightening torque (Intake manifold protector LH):
19 N·m (1.9 kgf-m, 6.3 ft-lb)

Tightening torque (Intake manifold protector RH):
19 N·m (1.9 kgf-m, 6.3 ft-lb)

Tightening torque (Fuel injector CM):
6.4 N·m (0.7 kgf-m, 4.7 ft-lb)

Tightening torque (Engine mount):
45 N·m (4.6 kgf-m, 33.2 ft-lb)

Tightening torque (Sound creator):
6 N·m (0.6 kgf-m, 4.4 ft-lb)

Tightening torque (Sound creator clamp):
2 N·m (0.2 kgf-m, 1.5 ft-lb)

Tightening torque (Air intake boot clamp (except for air cleaner case)):
2 N·m (0.2 kgf-m, 1.5 ft-lb)

Tightening torque (Air intake boot clamp (air cleaner case)):
3 N·m (0.3 kgf-m, 2.2 ft-lb)

Tightening torque (Air cleaner case):
6 N·m (0.6 kgf-m, 4.4 ft-lb)

Tightening torque (Exhaust manifold sub-assembly):
30 N·m (3.1 kgf-m, 22.1 ft-lb)

Tightening torque (Exhaust pipe sub-assembly FR):
35 N·m (3.6 kgf-m, 25.8 ft-lb)

Tightening torque (Exhaust pipe assembly CTR):
18 N·m (1.8 kgf-m, 13.3 ft-lb)

Tightening torque (Exhaust pipe assembly FR):
42.5 N·m (4.3 kgf-m, 31.3 ft-lb)

Tightening torque (Bolts securing bracket of exhaust pipe assembly FR):
50 N·m (5.1 kgf-m, 36.9 ft-lb)

6. V-belt

A: INSPECTION

1) Check the V-belt for cracks, tear or wear.
2) Check the V-belt tensioner assembly and idler pulley for deformation, cracks or other damages.
3) Check that the V-belt ribs are securely placed on the rib grooves for each pulleys.

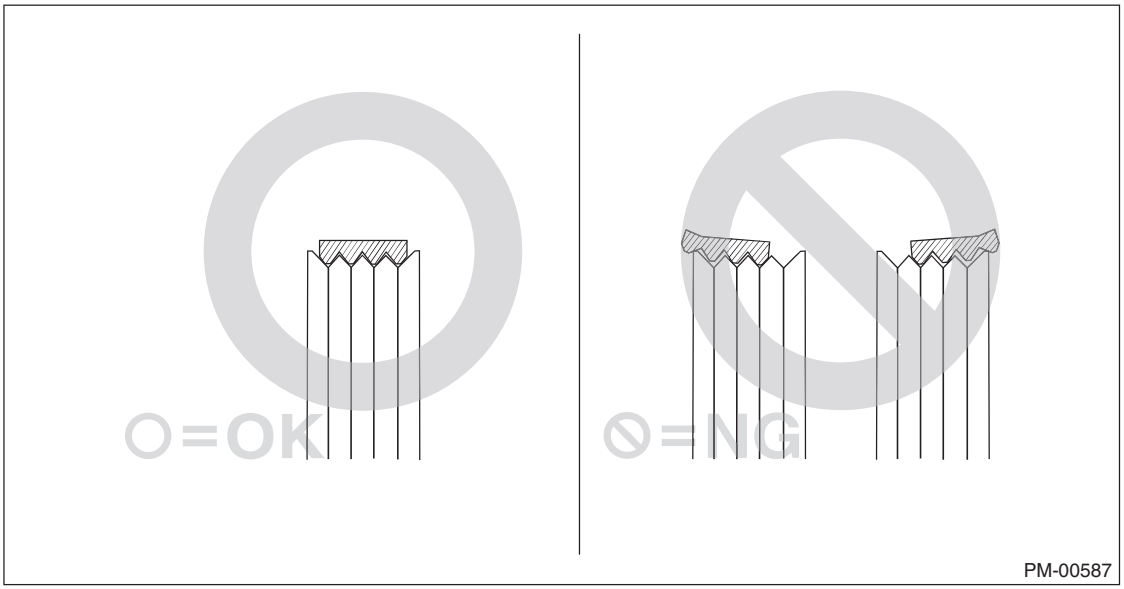

B: REPLACEMENT

NOTE:
When replacing a single part, perform the work with the engine assembly installed to body.

1) Removing air cleaner assembly w/hose
   (1) Disconnect the connector of the mass air flow and intake air temperature sensor, and remove the one clip that holds the harness.
   (2) Slide the hose clip and disconnect ventilation hose No. 1.
   (3) Loosen the two hose clamps.
   (4) Remove the three bolts to remove the air cleaner assembly w/hose.

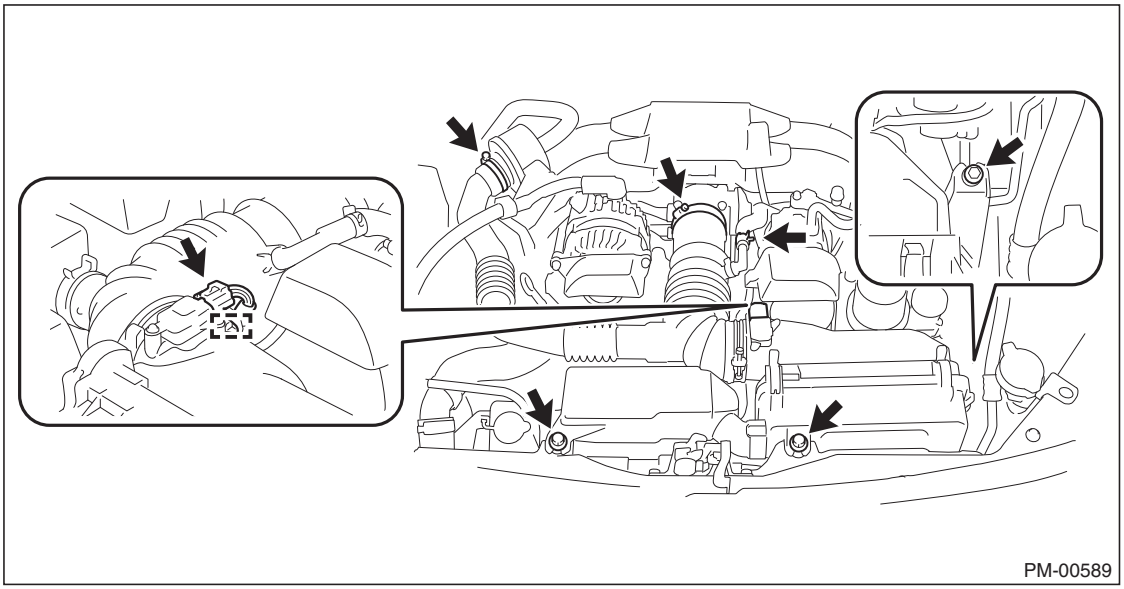

2) Removing belt cover No. 1
   (1) Remove the two bolts and the belt cover No. 1.

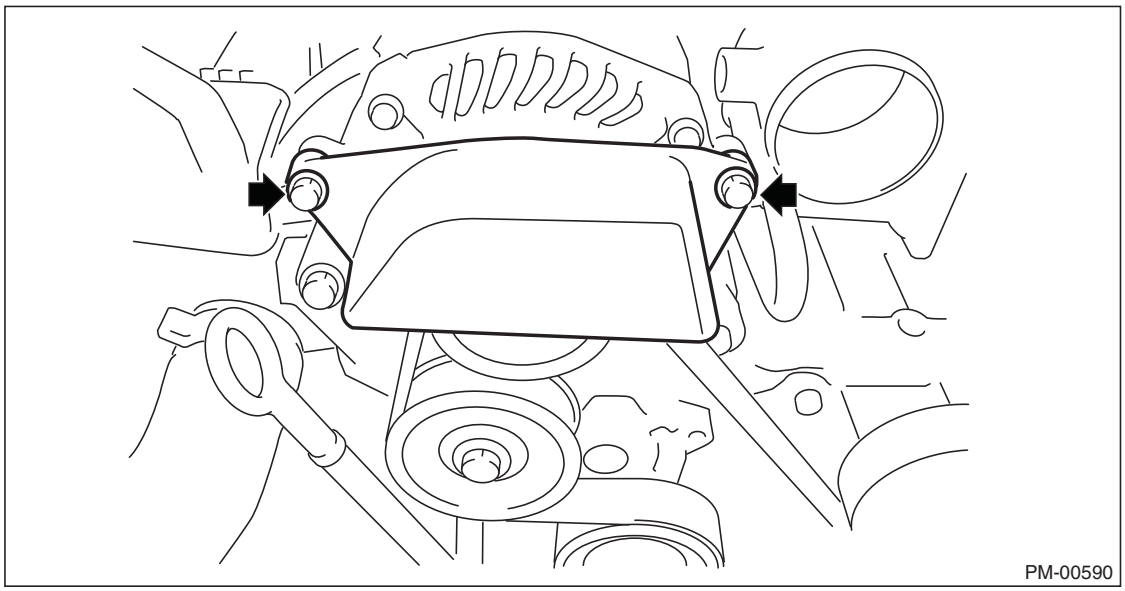

3) Removing belt cover No. 2
   (1) Release the clip and disconnect the wire harness.
   (2) Remove the two bolts, belt cover No. 2, clip securing the A/C compressor connector from the V-belt cover LH (models with A/C only), then remove the V-belt cover LH.

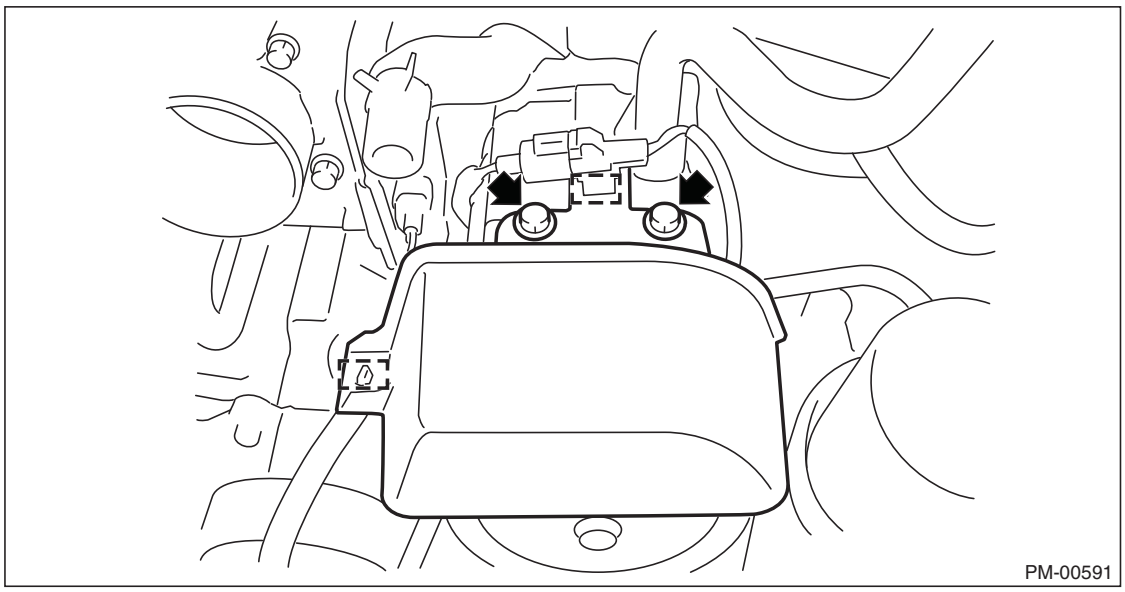

4) Removing the fan & generator V-belt
   (1) Set the tool on the pulley set bolt of the belt tensioner, rotate the belt tensioner counterclockwise to loosen the tension and remove the fan & generator V-belt.

CAUTION:
As the pulley set bolt uses a left-threaded screw, rotating clockwise loosens the pulley set bolt.

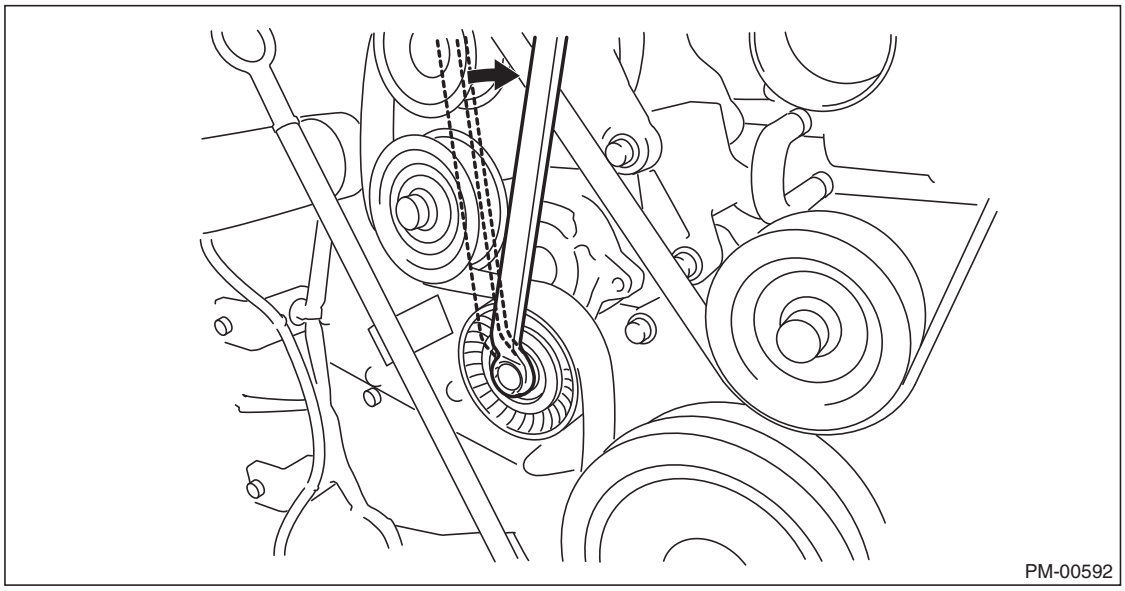

5) Install in the reverse order of removal.

CAUTION:
- **Do not use the V-belt if there is any oil, grease or coolant on the belt.**
- **Be careful not to rub the V-belt end surface with bare hands; exposed core may cause injury.**
- **Wipe off any dust, oil and water on the groove of each pulley with cloth.**

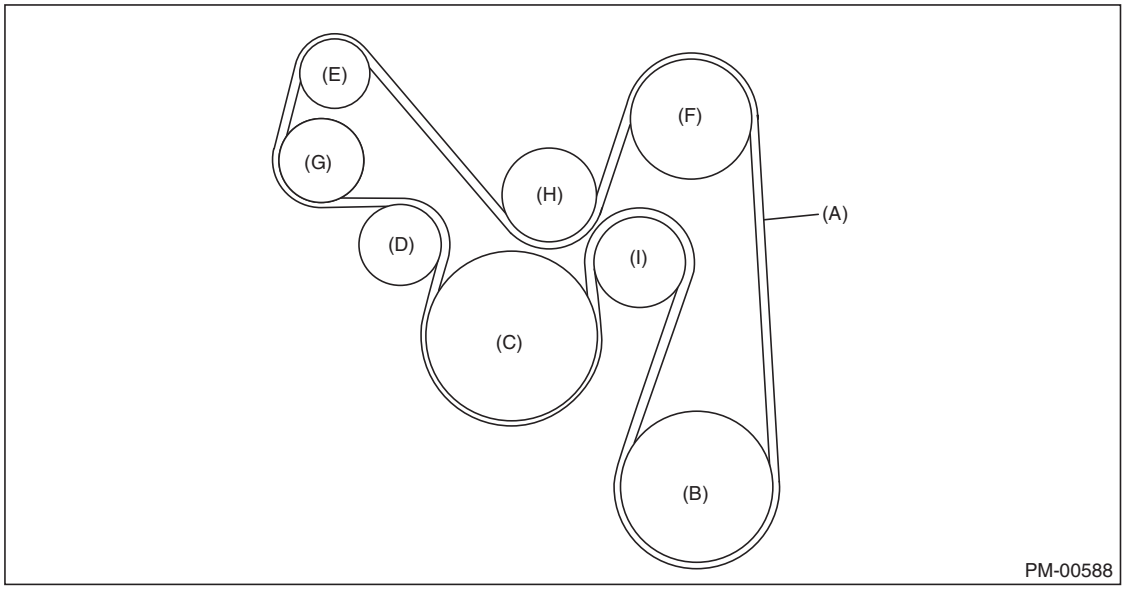

(A) V-belt
(B) Water pump pulley
(C) Crank pulley
(D) V-belt tensioner
(E) Generator pulley
(F) A/C compressor pulley
(G) Idler pulley A
(H) Idler pulley B
(I) Idler pulley C

Tightening torque:
6.4 N·m (0.7 kgf-m, 4.7 ft-lb)

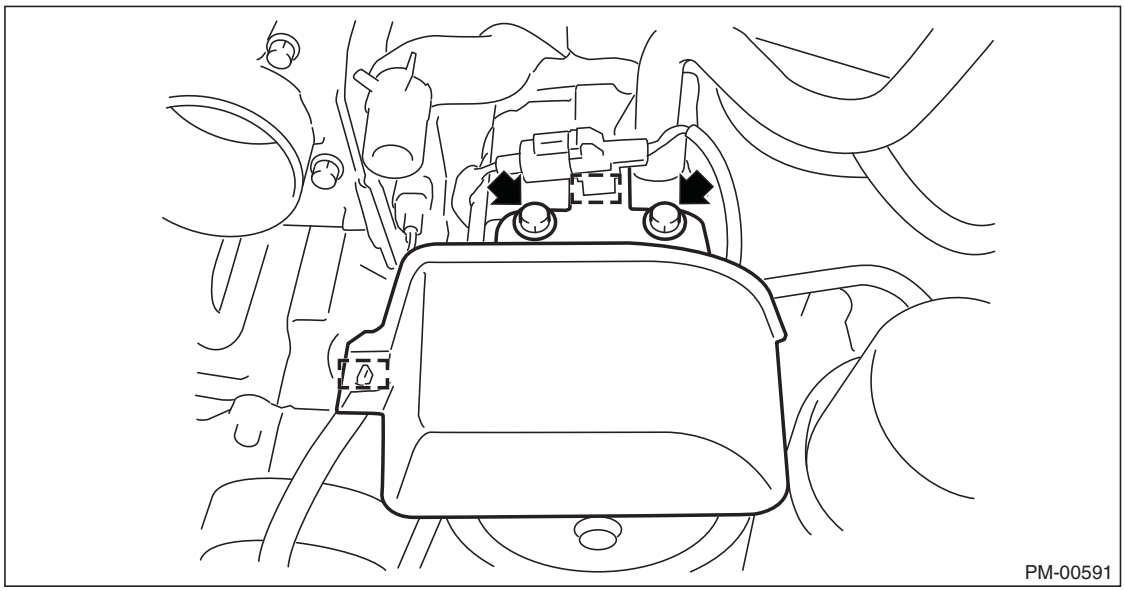

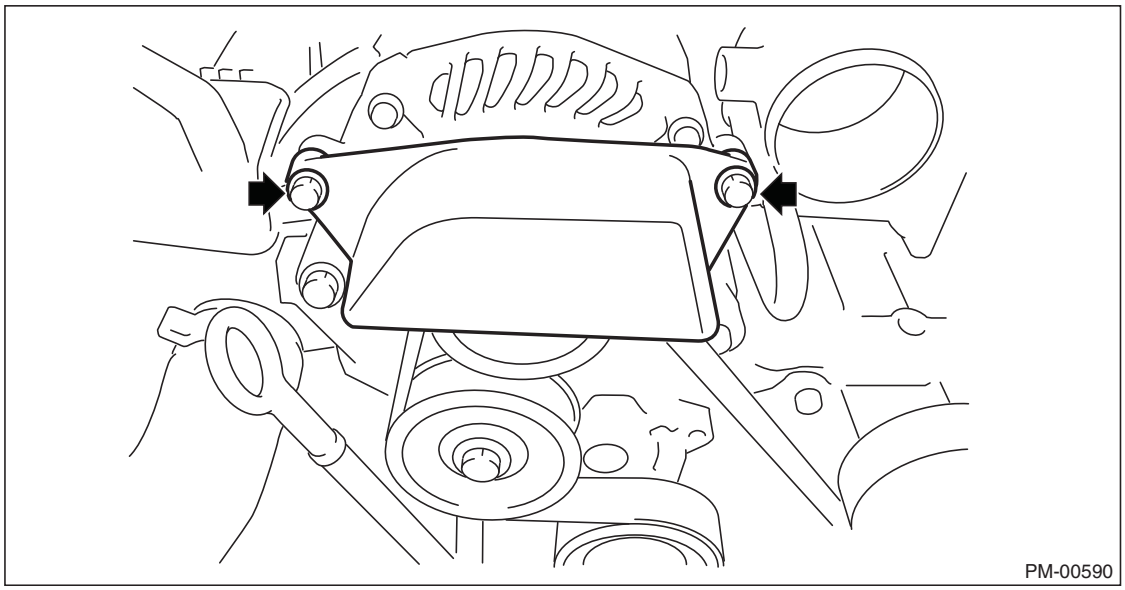

7. Fuel Line

A: INSPECTION

The fuel line is located mostly internally, so check pipes, areas near pipes, and engine compartment piping for rust, hose damage, loose bands and fuel leakage. If faulty parts are found, repair or replace them.

8. Fuel Filter

A: REPLACEMENT

WARNING:
Place “NO OPEN FLAMES” signs near the working area.

CAUTION:
- **Perform the work with the engine coolant at a temperature of 60°C (140°F) or less.**
- **Before removing fuel system parts, be sure to take measures to prevent fuel from flowing out.**
- **Prevent fuel from spilling when removing the fuel line as fuel pressure remains in the fuel line even after performing measures to prevent fuel from flowing out.**
- **If the fuel gauge indicates that two thirds or more of the fuel is remaining, be sure to drain fuel before starting work to avoid the fuel to spill.**
- **Be careful not to drop or apply any impact to the fuel pump during work. This may deteriorate its performance.**
- **Do not disconnect the press-fit hose of the fuel suction tube assembly indicated in the figure.**

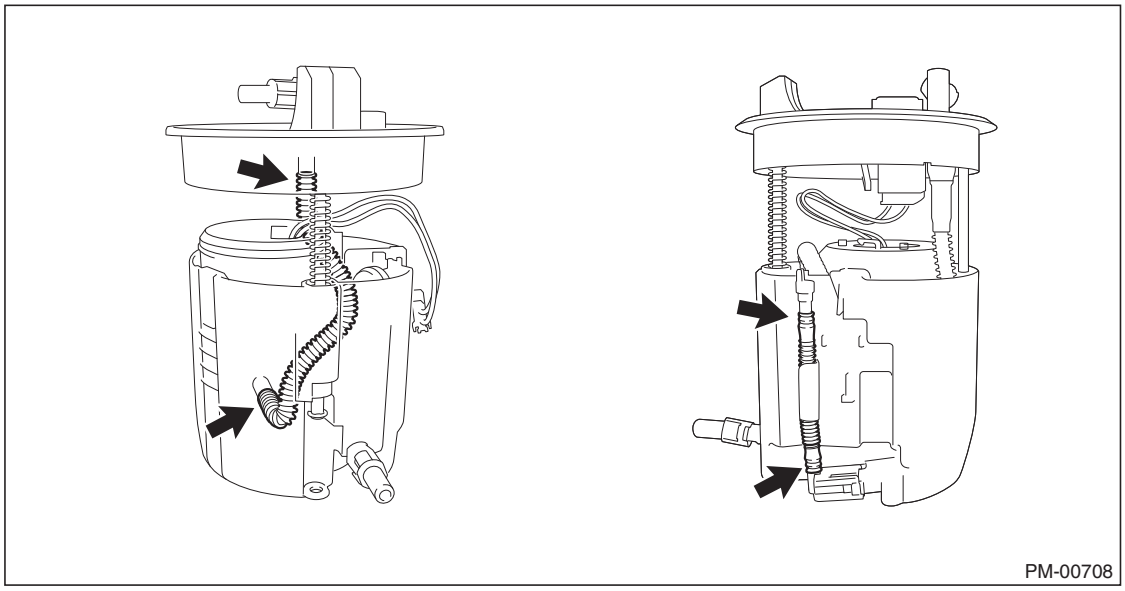

NOTE:
The fuel filter is built in fuel pump assembly.
1) Remove the relay block cover UPR.

2) Remove the fuel pump fuse from the engine room relay block.

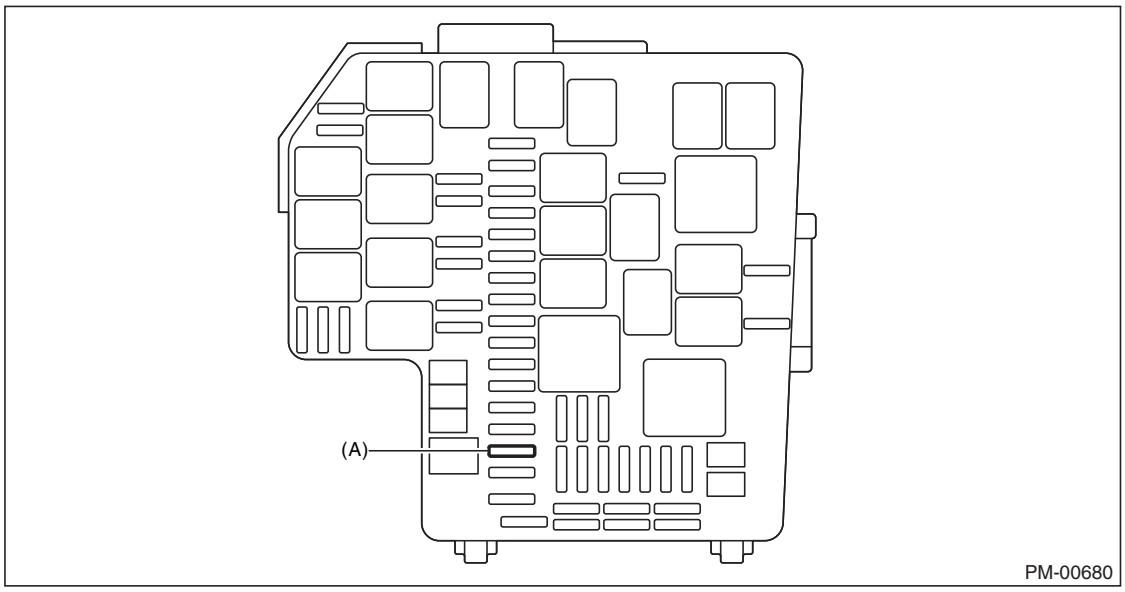

(A) Fuel pump fuse

3) Start the engine.
4) After the engine stops naturally, turn the key to IG OFF.
5) Crank the engine again and check that the engine does not start.

NOTE:
Check/Delete diagnostic codes after performing procedures as some diagnostic code might have been detected.

6) Remove the fuel tank cap and release pressure from the fuel tank.
7) Disconnect the ground cable from battery.
8) Install the fuel pump fuse.
9) Install the relay block cover UPR.

10) If the fuel gauge indicates that two thirds or more of the fuel is remaining, drain fuel according to the following procedures. (Method with Subaru Select Monitor)

NOTE:
- If the fuel pump cannot be driven, refer to the procedures for draining from the fuel tank to filler pipe hose.
- Be careful not to let the battery run-out.

(1) Use the ST to disconnect the fuel hoses on the port injection side and on the cylinder internal injector side.
ST 42099AE000

CAUTION:
- **Before performing the procedures, remove any foreign material such as mud adhering to the fuel hose connection parts.**
- **Be careful not to spill fuel.**
- **Catch the fuel from fuel hoses using a container.**

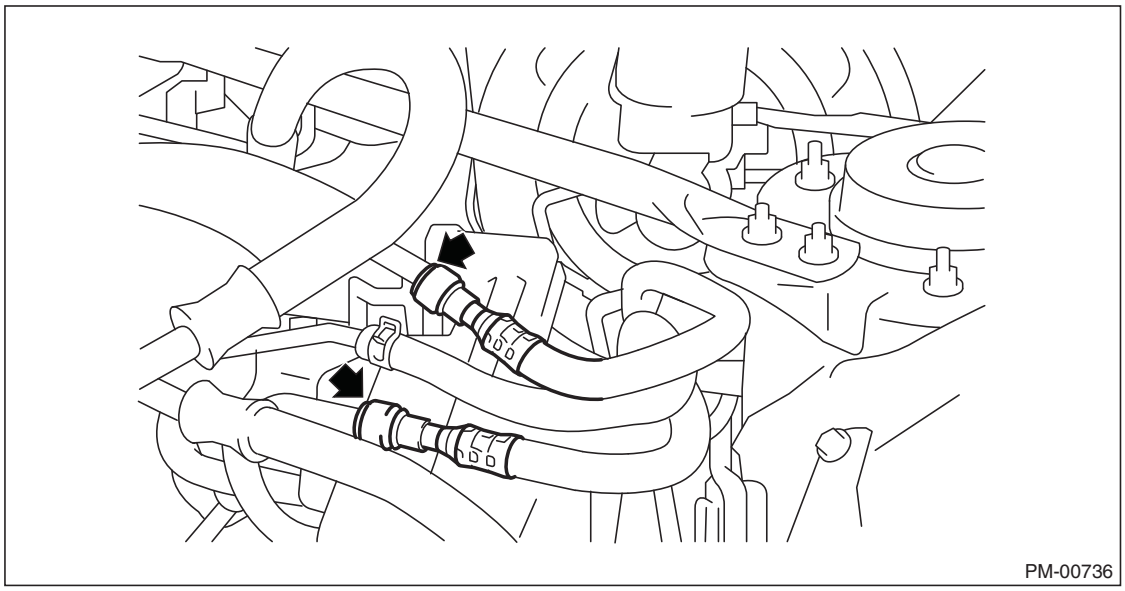

(2) Connect the ST to the fuel hose.
ST 18471AA000
(3) Connect the gasoline-proof hose to the ST and put the end of the hose in the container.
(4) Drive the fuel pump and drain the fuel using Subaru Select Monitor.

11) If the fuel gauge indicates that two thirds or more of the fuel is remaining, drain fuel according to the following procedures. (Method for draining from fuel tank to filler pipe hose)

WARNING:
Vehicle components are extremely hot after driving. Be wary of receiving burns from heated parts.

CAUTION:
- **Be careful not to spill fuel.**
- **Fuel may remain in the fuel filler pipe. Drain the fuel from the fuel filler pipe through the fill opening using a gasoline-resistant pump and hose (10 mm (0.39 in) or less) before performing the procedures.**

(1) Remove the two nuts and two bolts, and disconnect the exhaust tail pipe assembly.

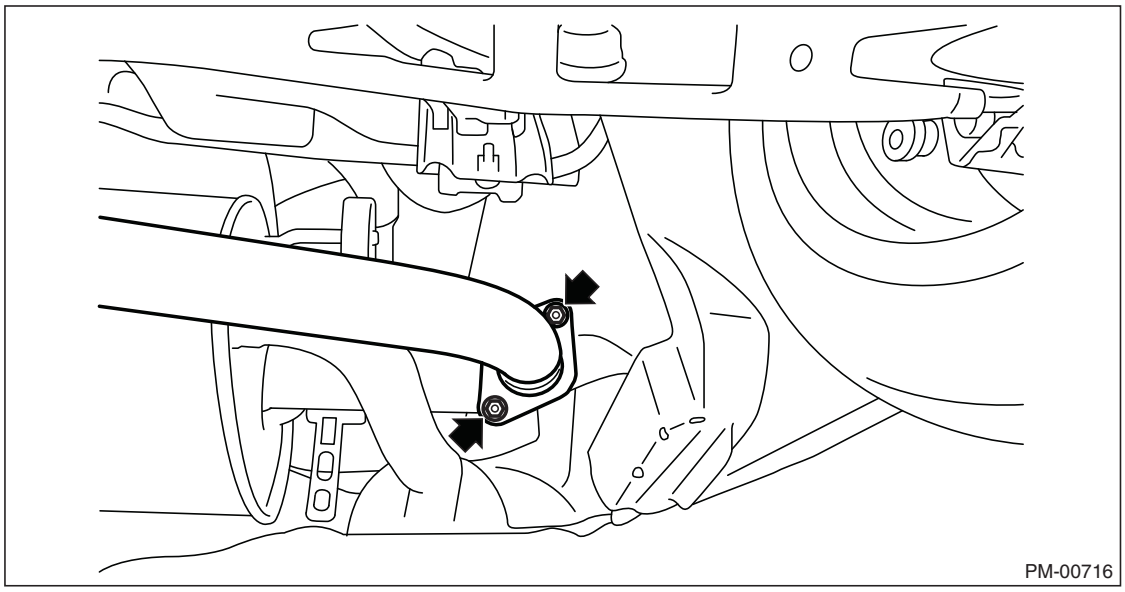

(2) Remove the cushion rubber and the exhaust pipe assembly CTR.

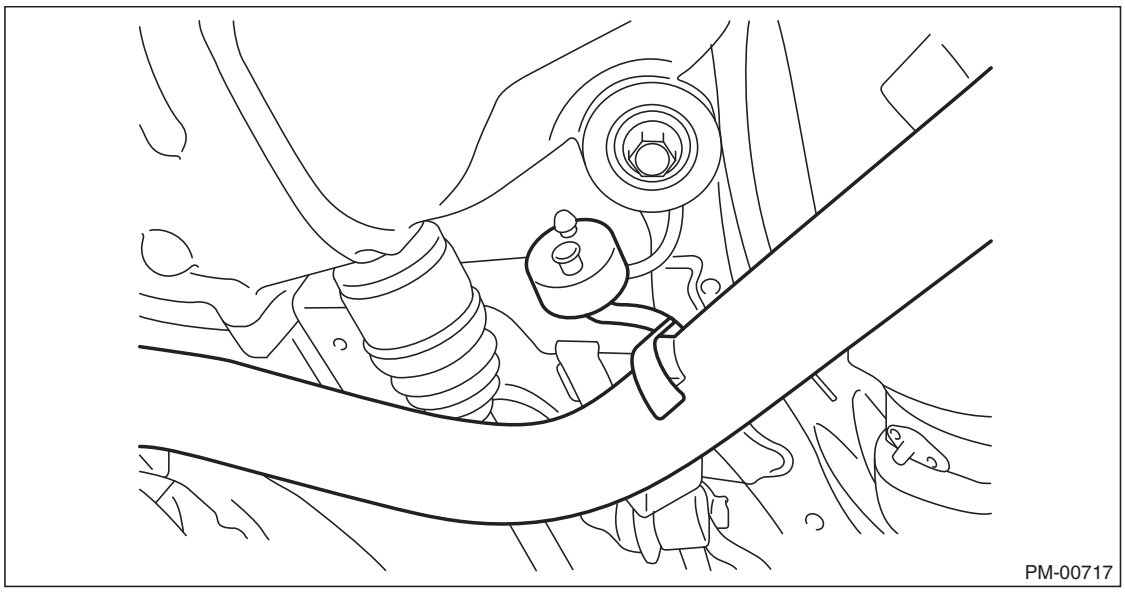

(3) Remove the gasket.

(4) Remove the four cushion rubbers and the exhaust tail pipe assembly.

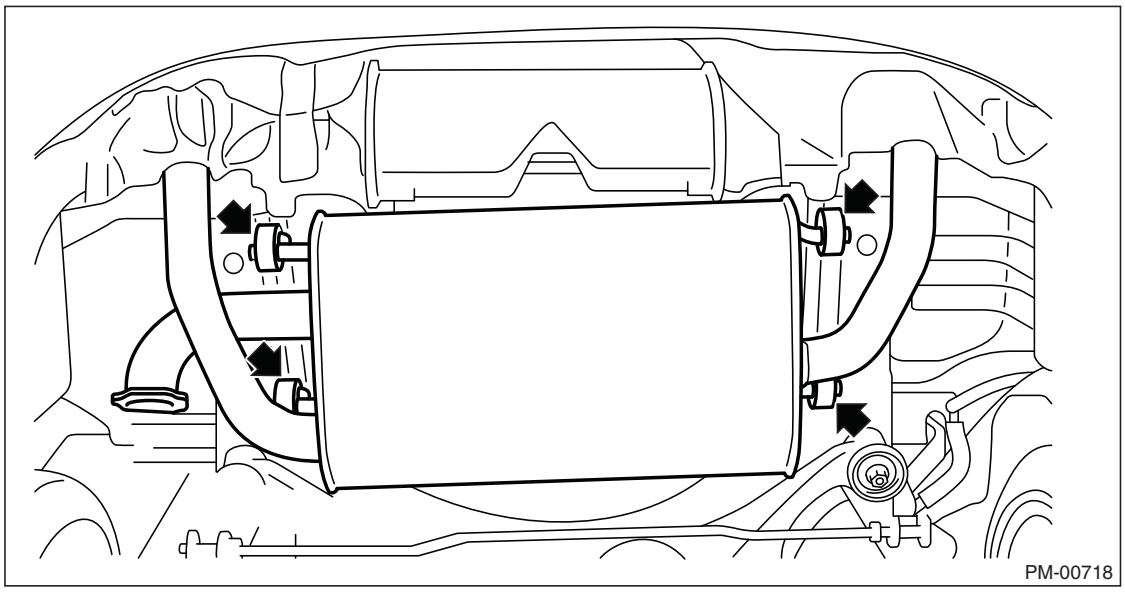

(5) Loosen the hose clamp, and disconnect the fuel tank to filler pipe hose.

CAUTION:
- **Before performing the procedures, remove any foreign material such as mud adhering to the connecting parts of the fuel tank to filler pipe hose.**
- **Be careful not to spill fuel.**

(6) Set a steel container under the vehicle and use a gasoline-resistant hose (10 mm (0.39 in) or less) to drain the fuel from the opening of the fuel tank to filler pipe hose.

CAUTION:
Be careful not to spill fuel.

NOTE:
Always be sure to use a steel container and ground the container as gasoline can easily become charged with static electricity.

(7) Install the fuel tank to filler pipe hose using hose clamps.

Tightening torque:
2.0 N·m (0.2 kgf-m, 1.5 ft-lb)

12) Disconnect the ground cable from battery.
13) Remove the separator-type rear seat cushion assembly LH.

14) Press in the grommet and remove the grommet from rear floor service hole cover No. 2.

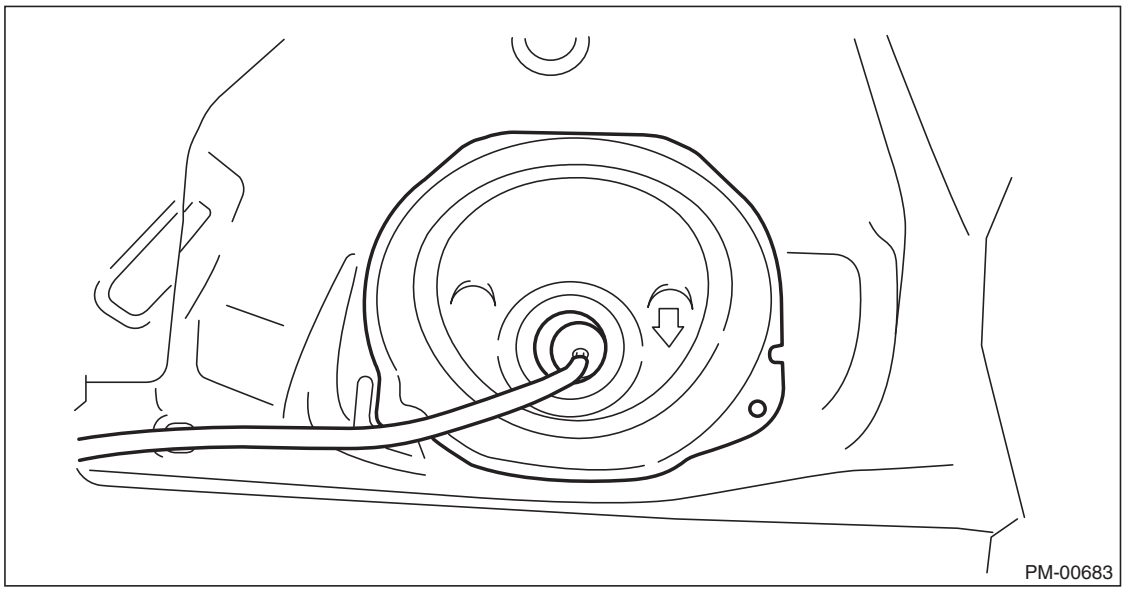

15) Peel off the butyl tape and remove rear floor service hole cover No. 2.
16) Disconnect the fuel pump connector.

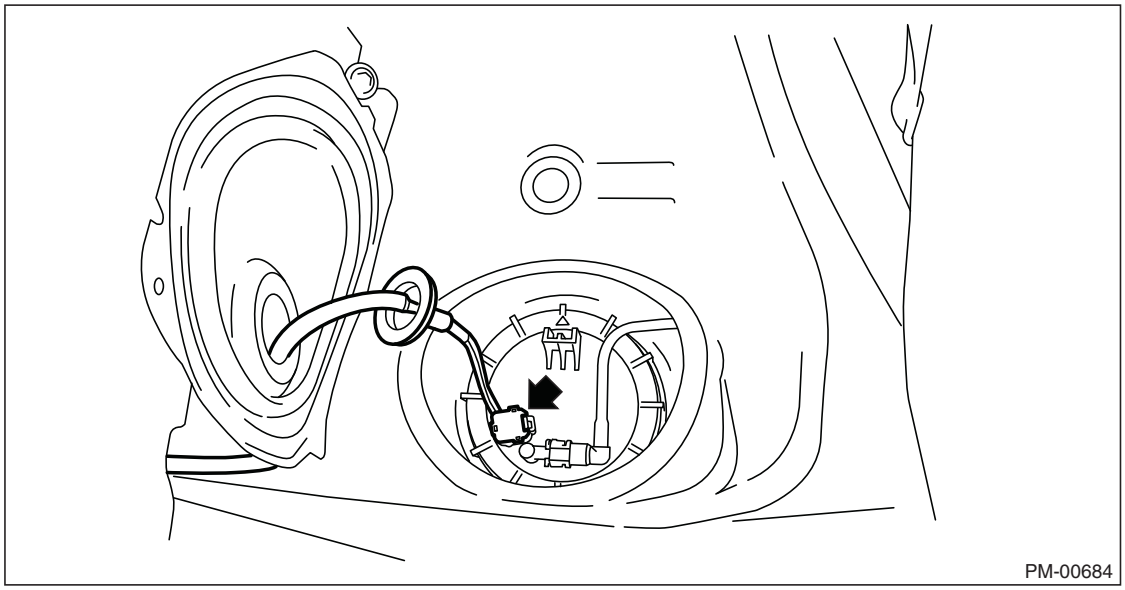

17) Disconnect the fuel pump tube connector.

CAUTION:
Be careful not to spill fuel.

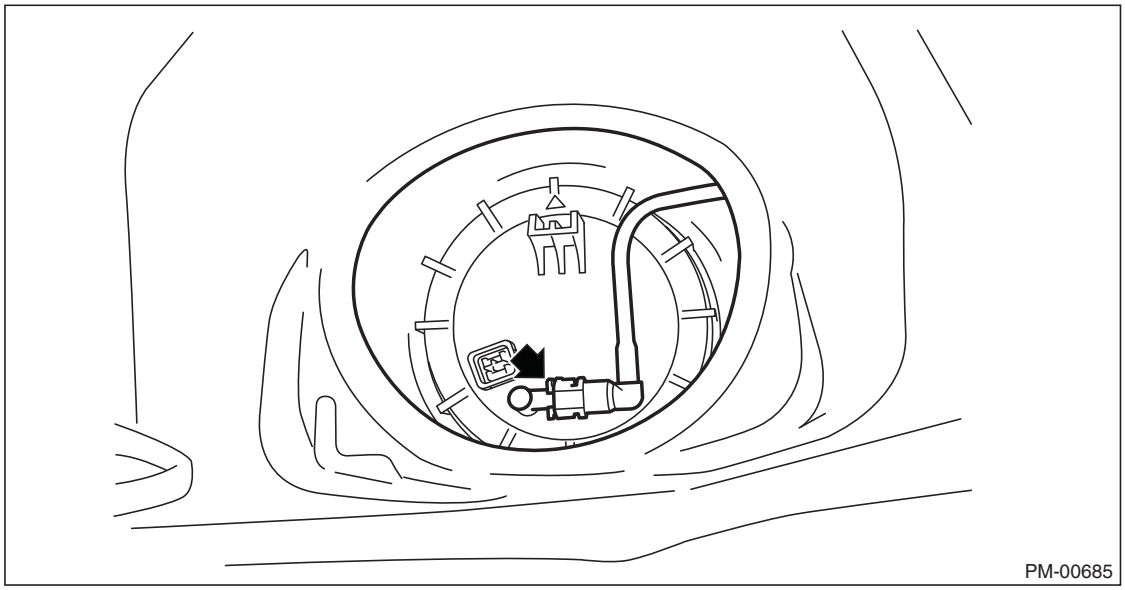

18) Remove the fuel pump tube from the fuel tank.

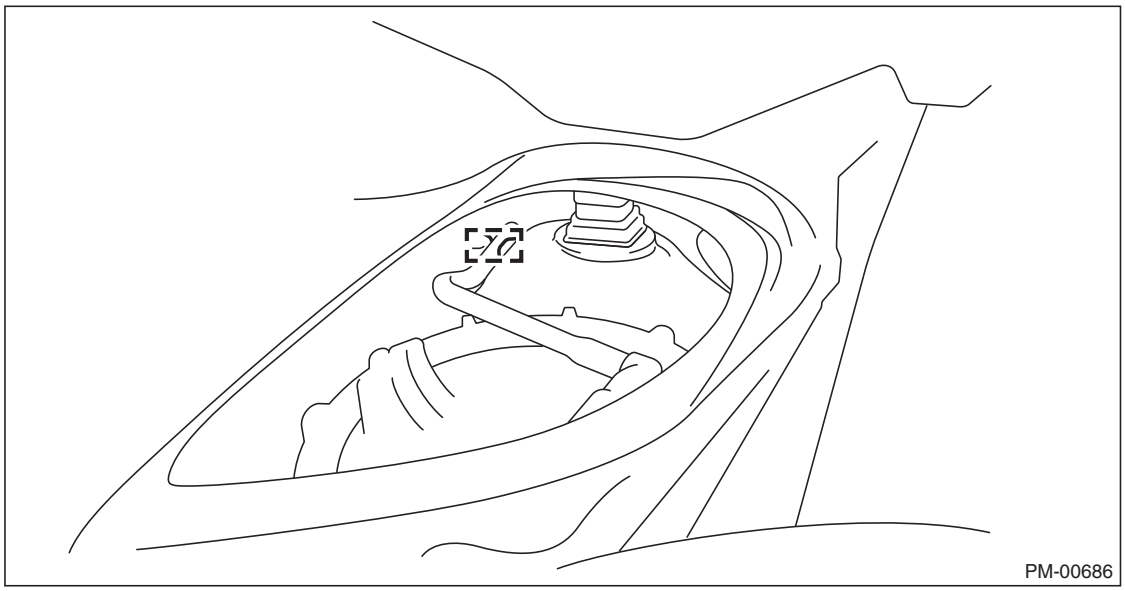

19) Loosen the fuel pump gauge retainer using the ST.
ST 42099CA000 ST FUEL PUMP

CAUTION:
- **Do not use any tool other than the ST.**
- **Be careful not to damage the tube with the ST.**
- **Before setting the ST, move the tube to a position outside the ST.**

NOTE:
Securely set the ST notch onto the rib part of the fuel pump gauge retainer.

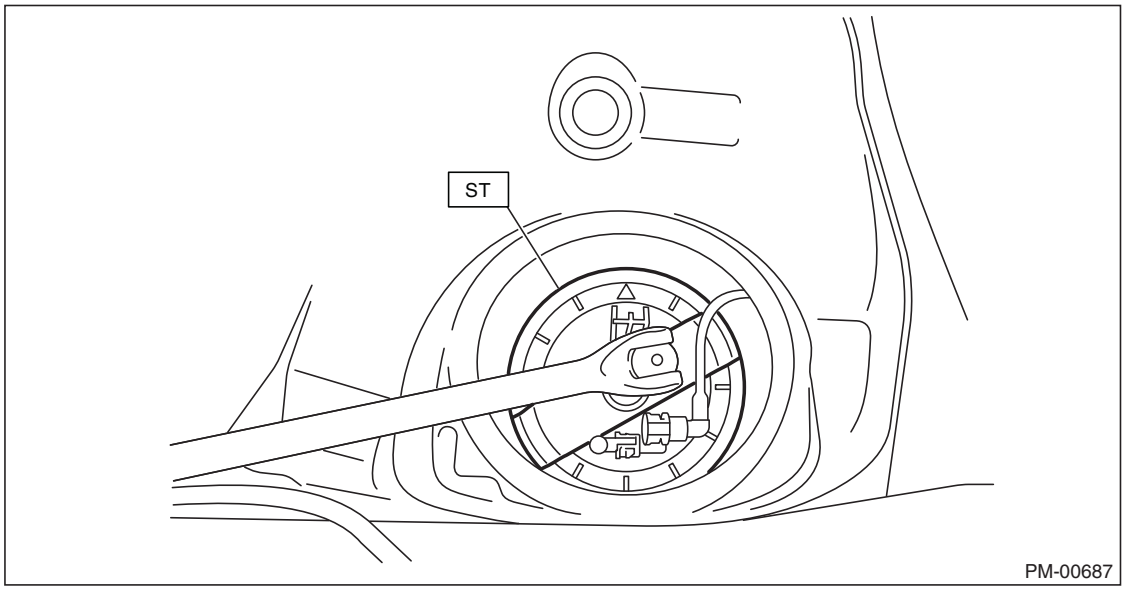

20) While pressing the fuel suction tube assembly by hand, remove the fuel pump gauge retainer and seat ring.

21) Disconnect the fuel tube connector, and remove the fuel suction tube assembly from the fuel tank.

CAUTION:
- **Do not pull with excessive force on the tube when disconnecting the fuel tube connector.**
- **Make sure not to bend the arm of the fuel sender gauge.**
- **Do not rotate the fuel suction tube assembly when in the fuel tank to prevent bending the arm of the fuel sender gauge.**
- **Be careful not to spill fuel remaining in the fuel suction tube assembly outside the fuel tank and in the vehicle.**

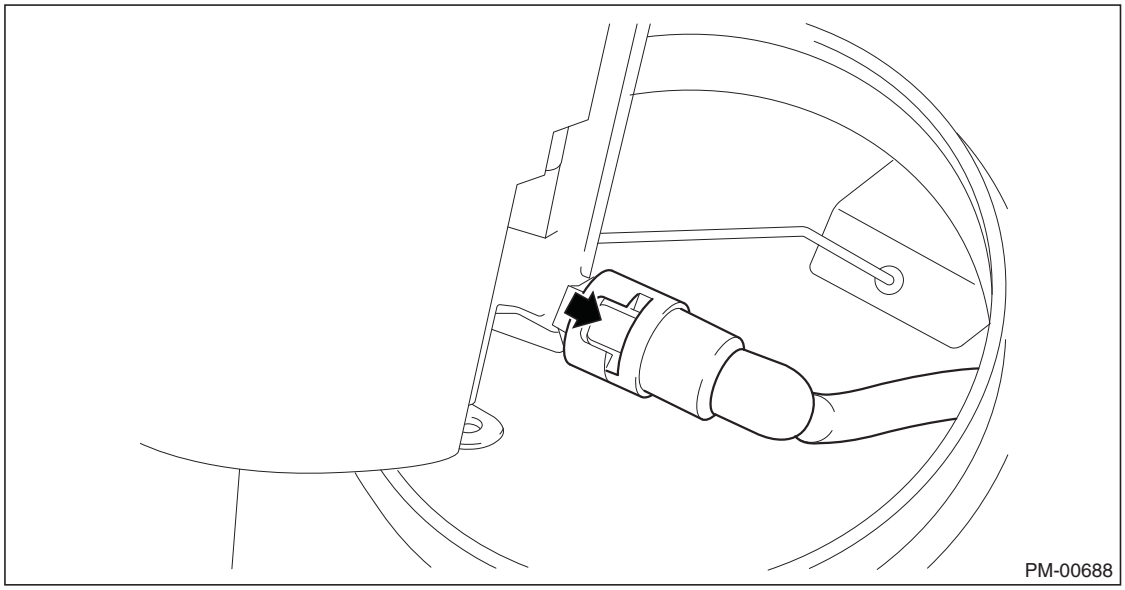

22) Remove the gasket from the fuel tank.
23) Disconnect the fuel sender gauge connector and remove the harness from the clamp.

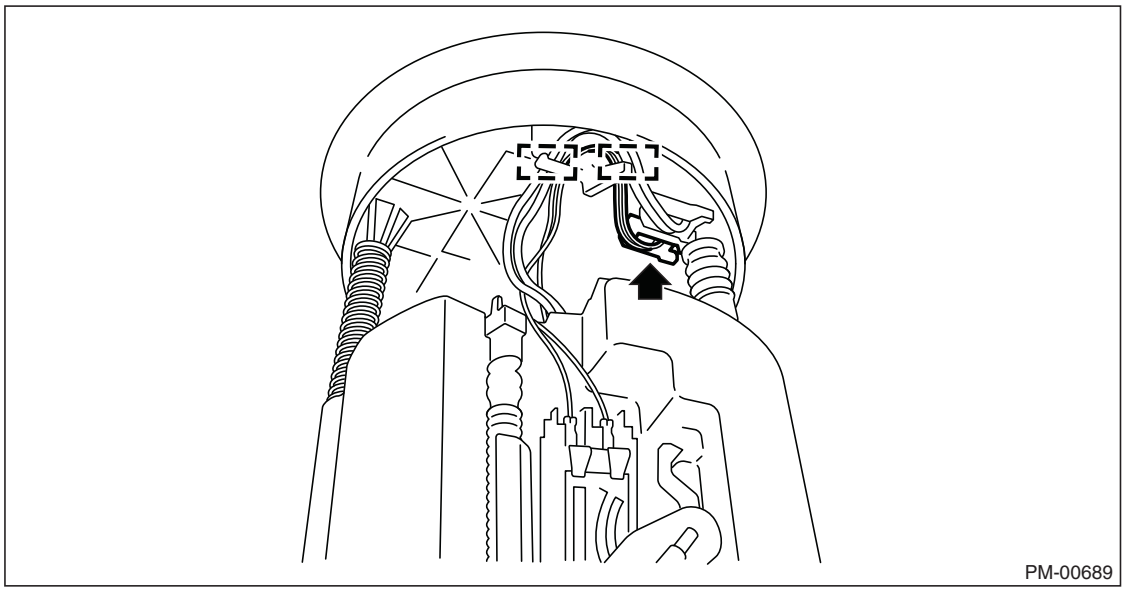

24) Remove the harness from the clamp, press and lift up the tab, and remove the fuel sender gauge assembly.

CAUTION:
Make sure not to bend the arm of the fuel sender gauge assembly.

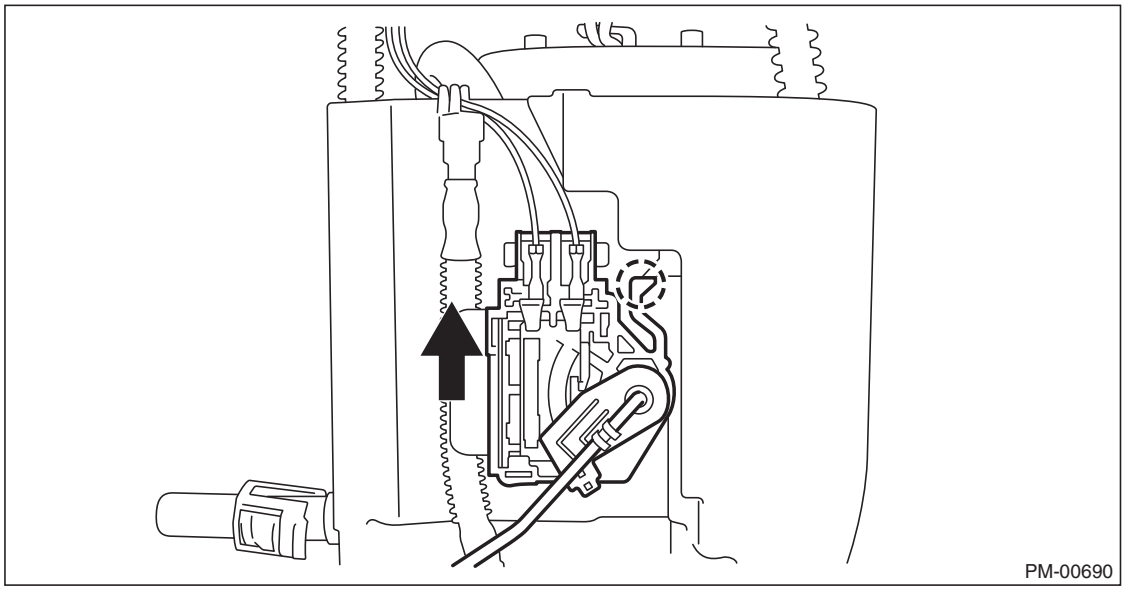

25) Disconnect the fuel pump connector.

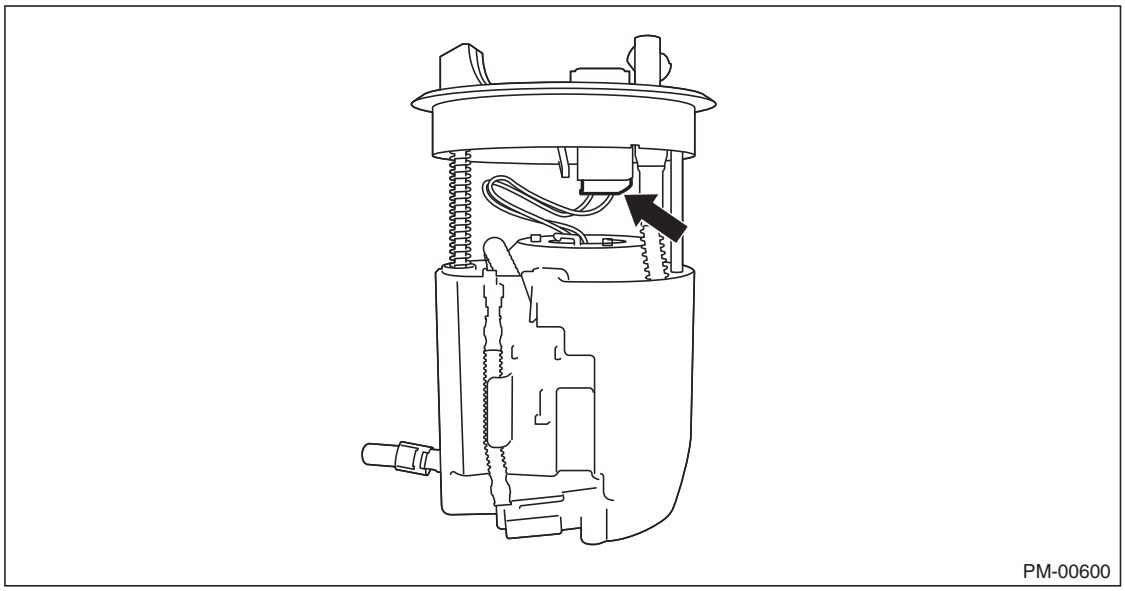

26) Press the fuel suction plate in the direction indicated in the figure, and remove the E ring using needle nose pliers.

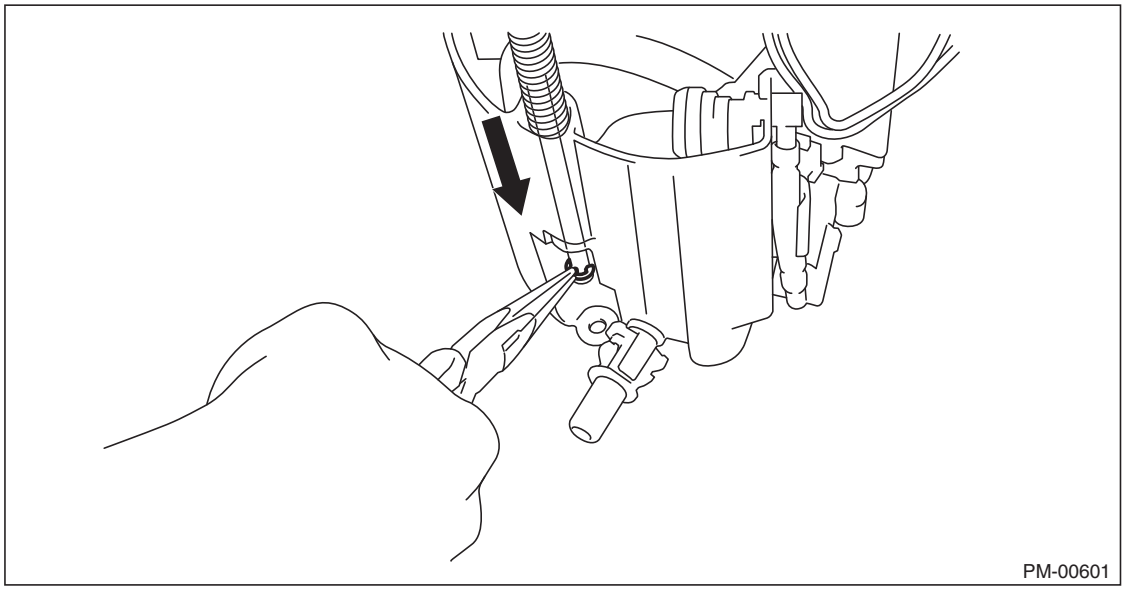

27) Release the tab using a flat tip screwdriver wrapped by protective tape and disconnect the jet pump nozzle.

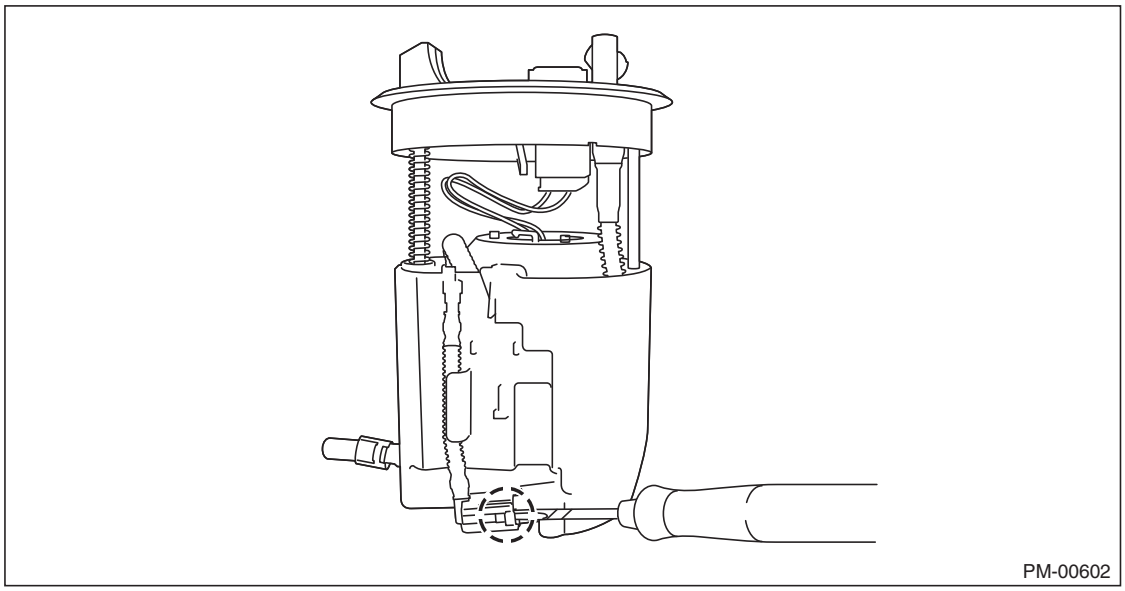

28) Release the three tabs using a flat tip screwdriver wrapped by protective tape and pull out the fuel suction plate.

CAUTION:
Do not damage the fuel sub tank or fuel filter.

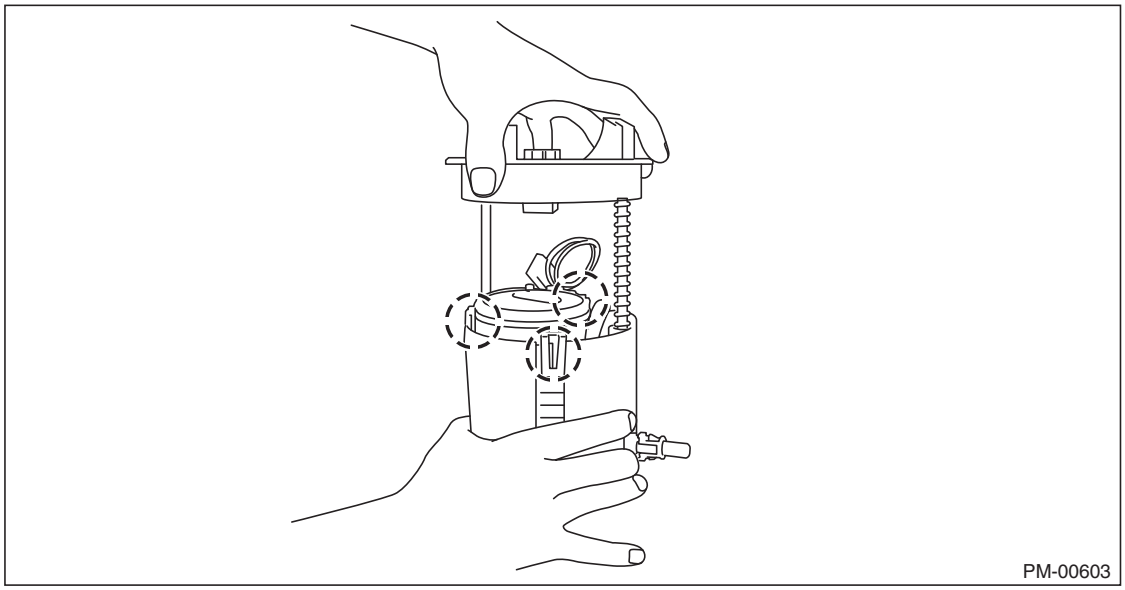

29) Release the tab using a flat tip screwdriver wrapped by protective tape and disconnect the jet pump.

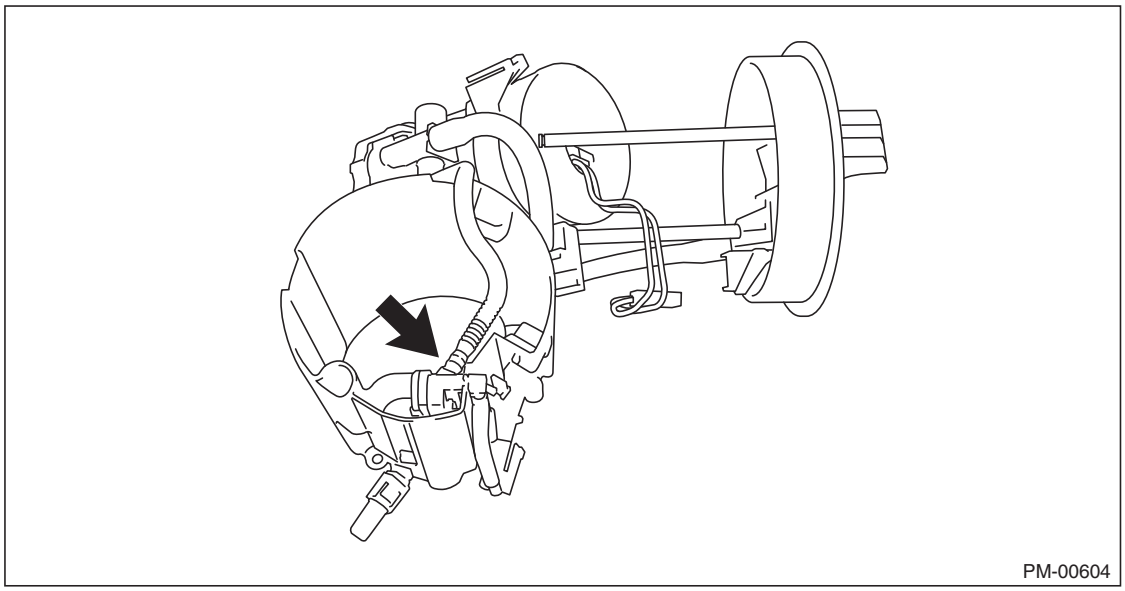

30) Remove the O-ring from the fuel sub tank.

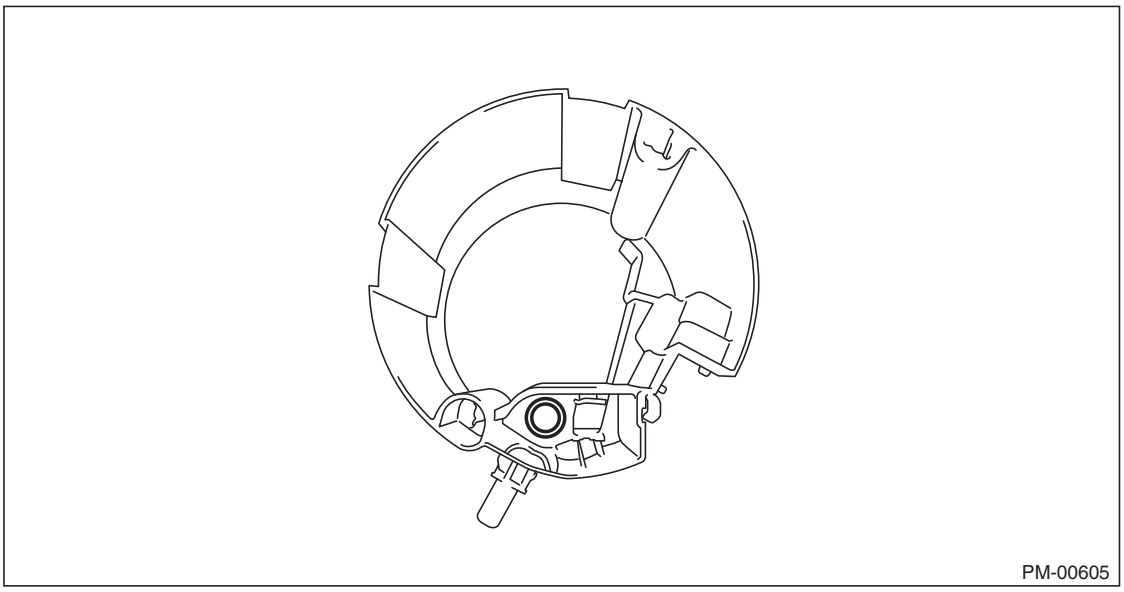

31) Release the two tabs using a flat tip screwdriver wrapped by protective tape.

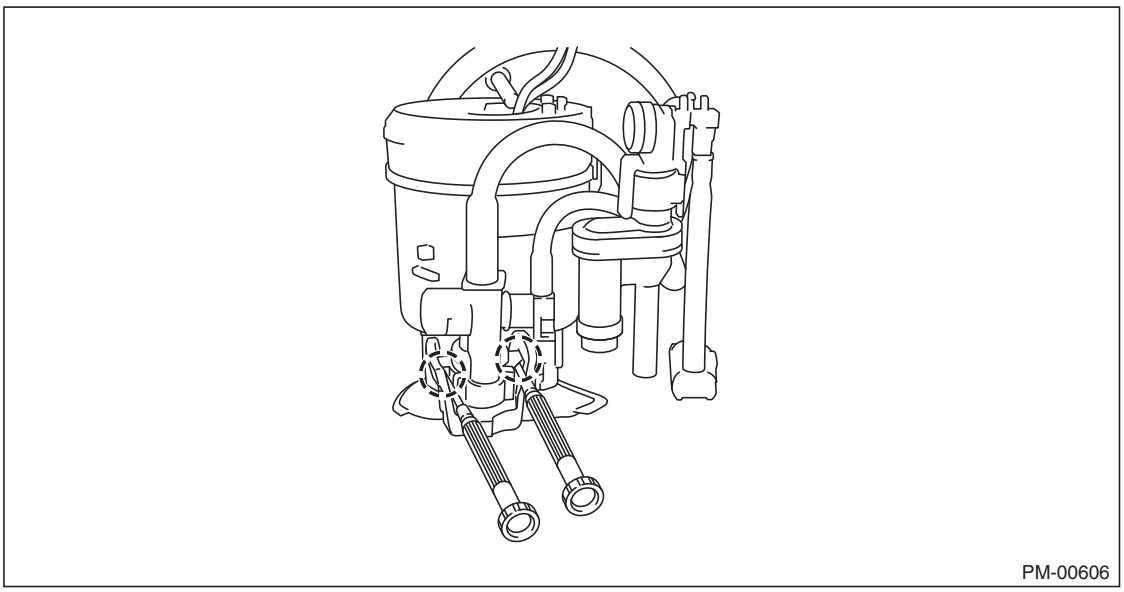

32) Release the three tabs using a flat tip screwdriver wrapped by protective tape and pull out the fuel pump keeping it completely straight.

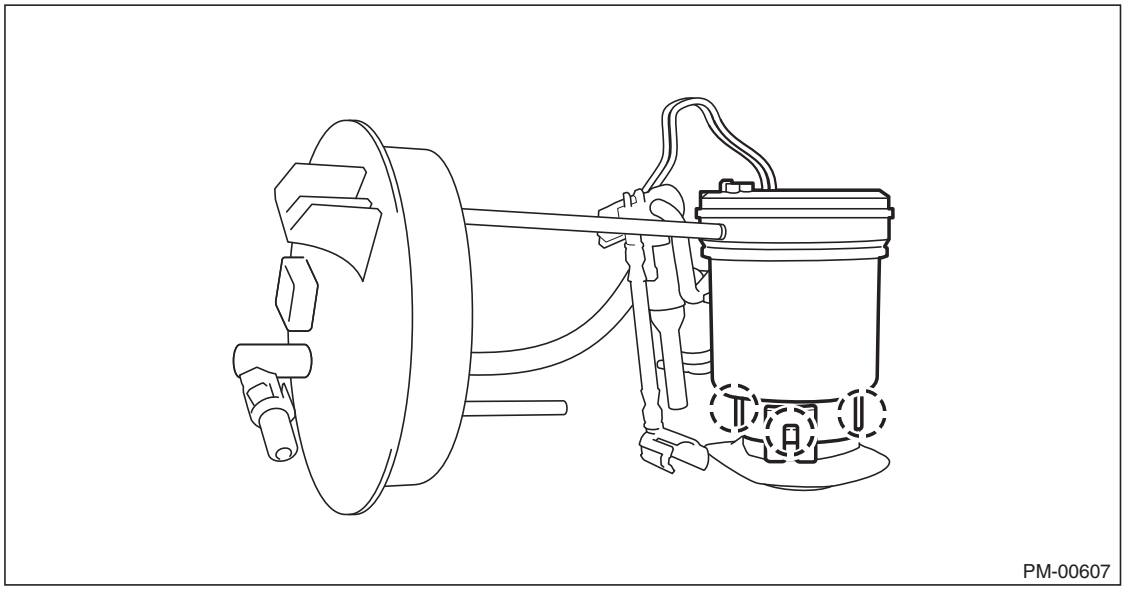

33) Remove the O-ring (A), spacer (B) and connector cable (C) from the fuel pump.

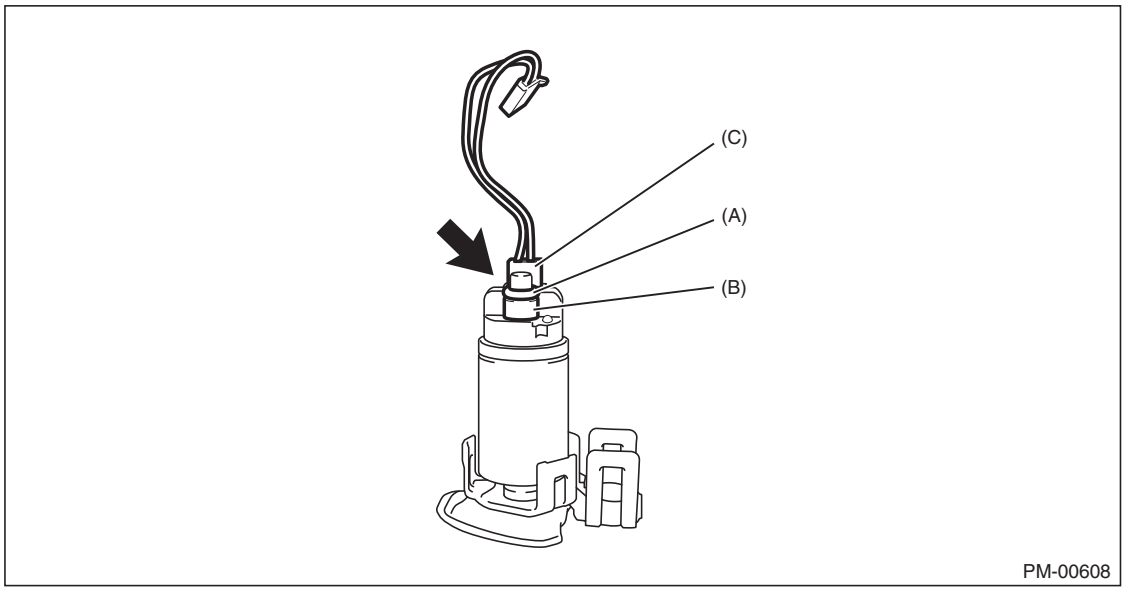

34) Remove the pressure regulator from the fuel filter assembly.

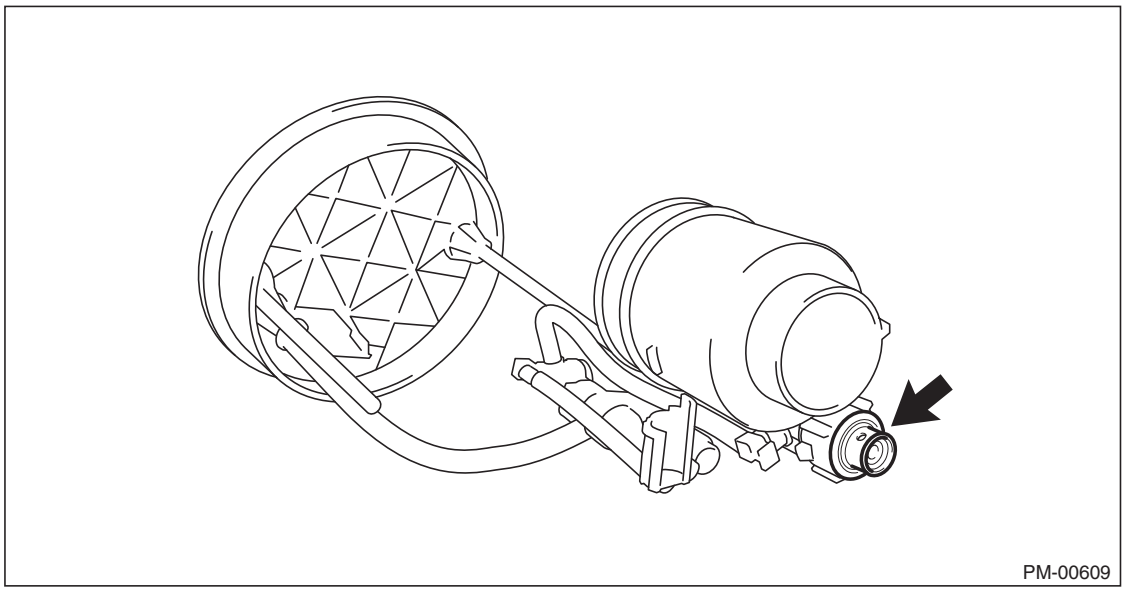

35) Remove the O-rings (A) and (B) and back-up ring (C) from the pressure regulator.

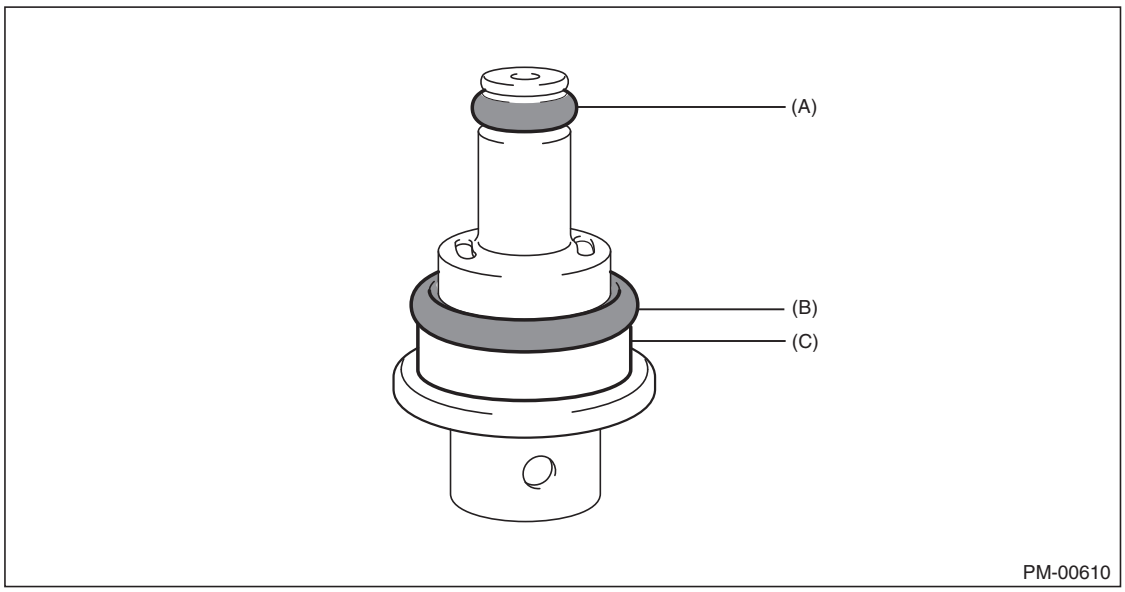

36) Install new O-rings (A) and (B), and new back-up ring (C) to the pressure regulator.

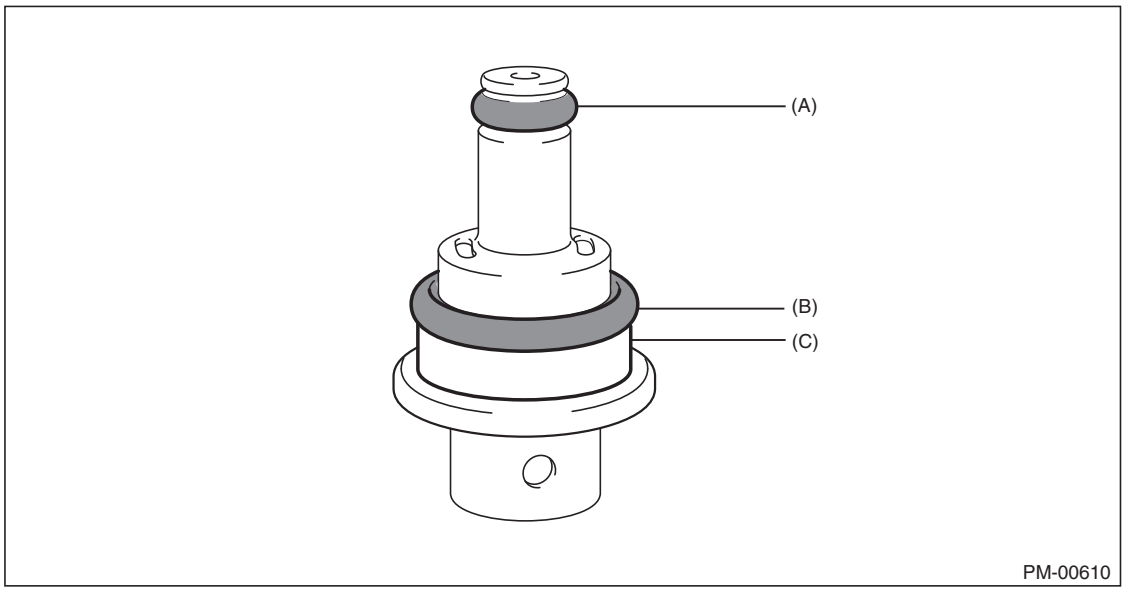

37) Install the pressure regulator to the fuel filter assembly.

CAUTION:
Make sure that the O-ring is not cut or pinched when installing.

NOTE:
Apply gasoline to the pressure regulator.

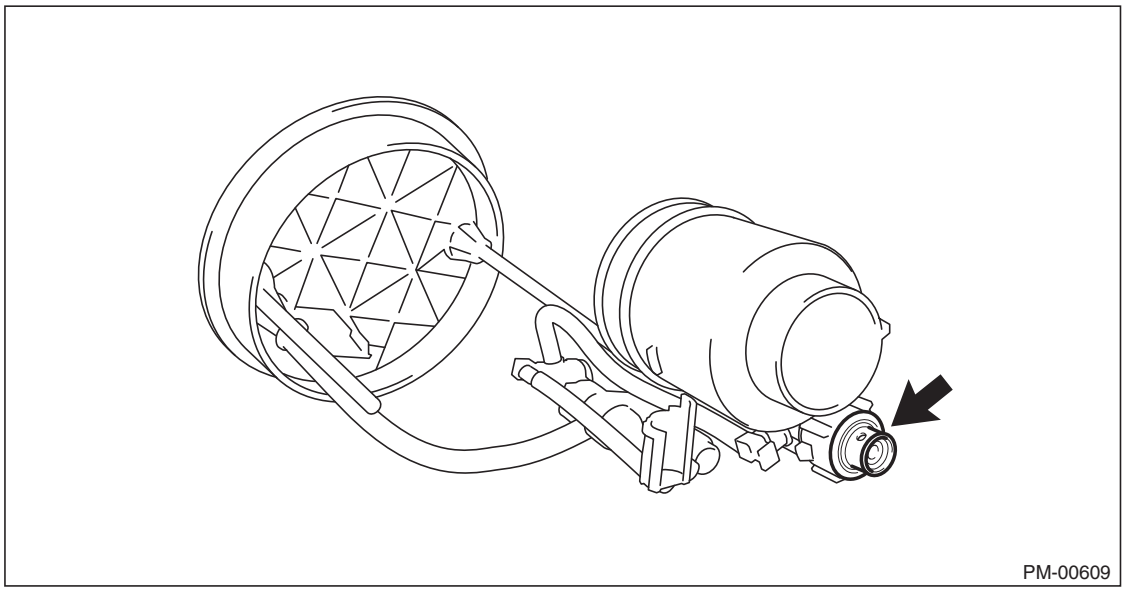

38) Install a new O-ring (A), spacer (B) and new connector cable (C) to the fuel pump.

NOTE:
Apply gasoline to the O-ring and spacer.

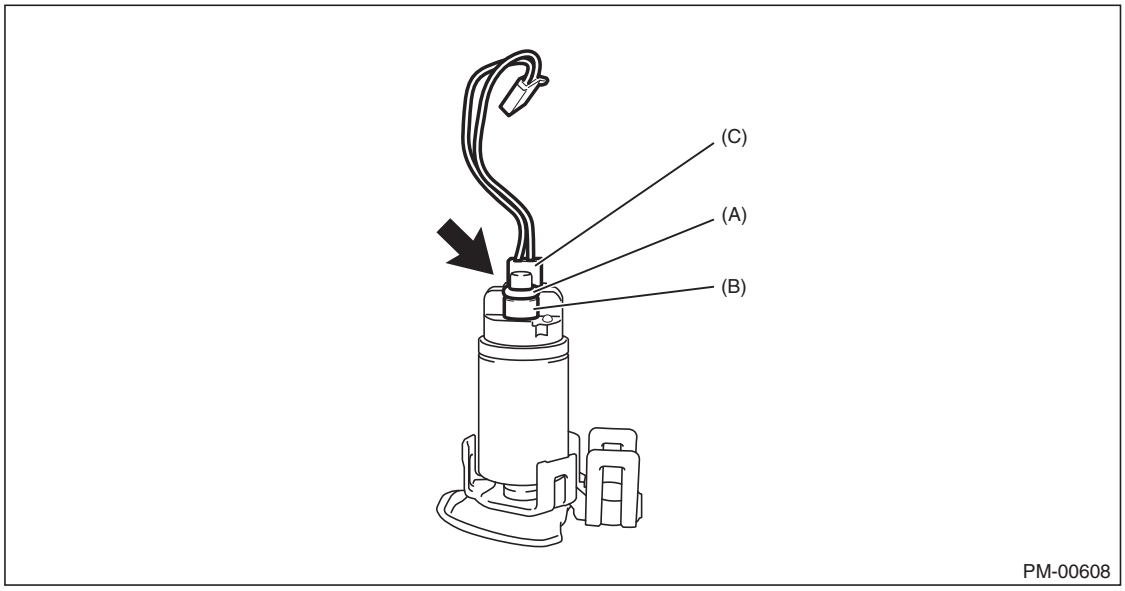

39) Install the fuel pump to the fuel filter assembly.

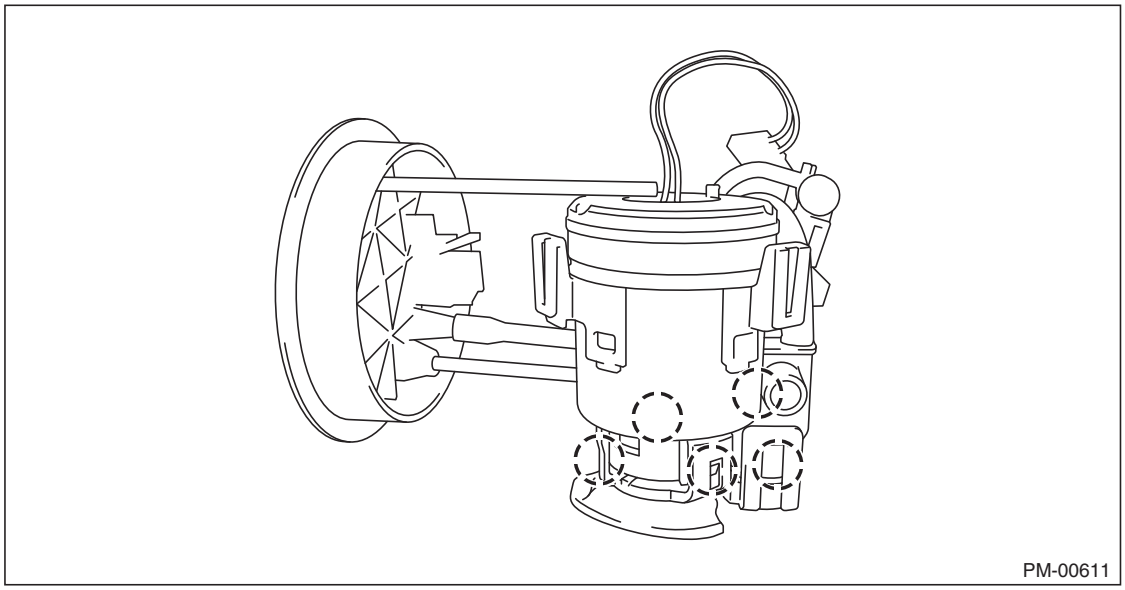

40) Install a new O-ring to the fuel filter assembly.

CAUTION:
Make sure that the O-ring is not cut or pinched when installing.

NOTE:
Apply gasoline to the O-ring.

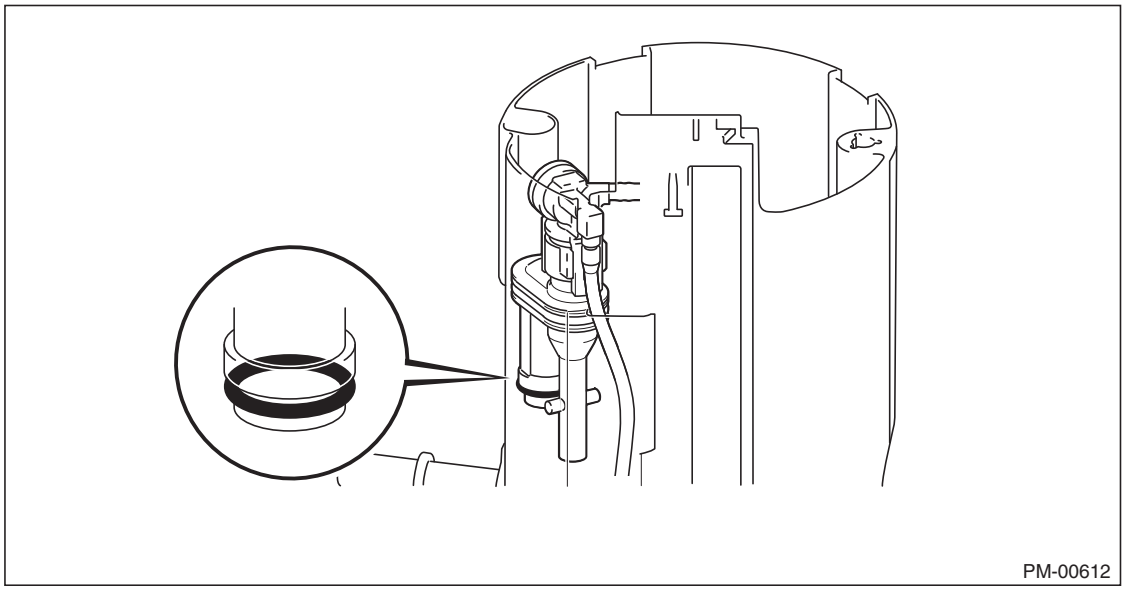

41) Install the jet pump to the fuel sub tank.
42) Engage the three tabs, and install the fuel filter to the fuel sub tank.

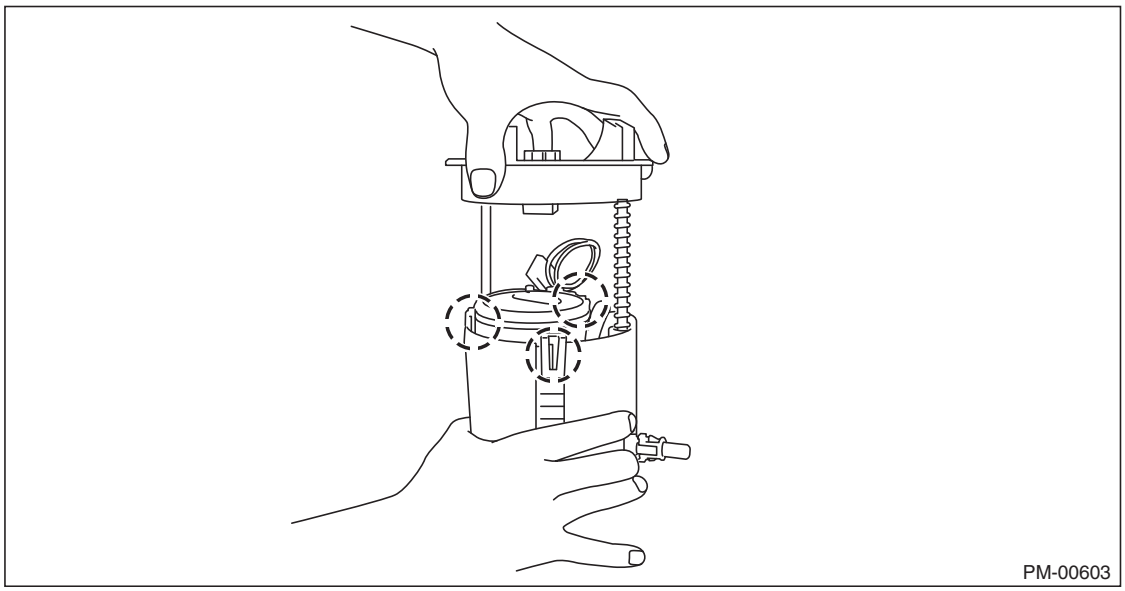

43) Engage the tab, and install the jet pump nozzle to sub tank No. 1.

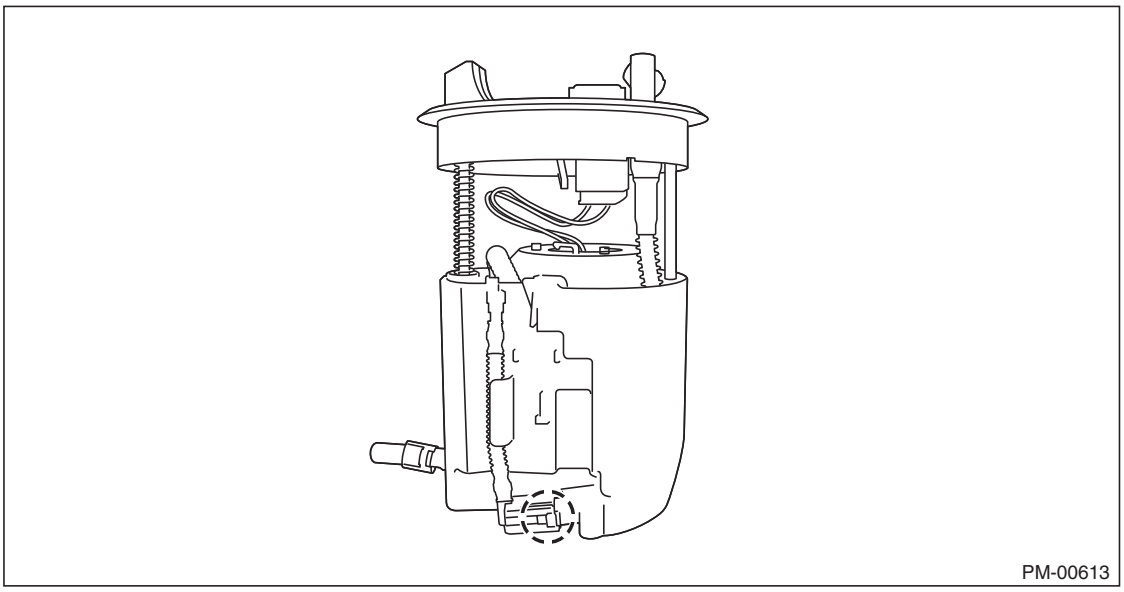

44) Install the E-ring.

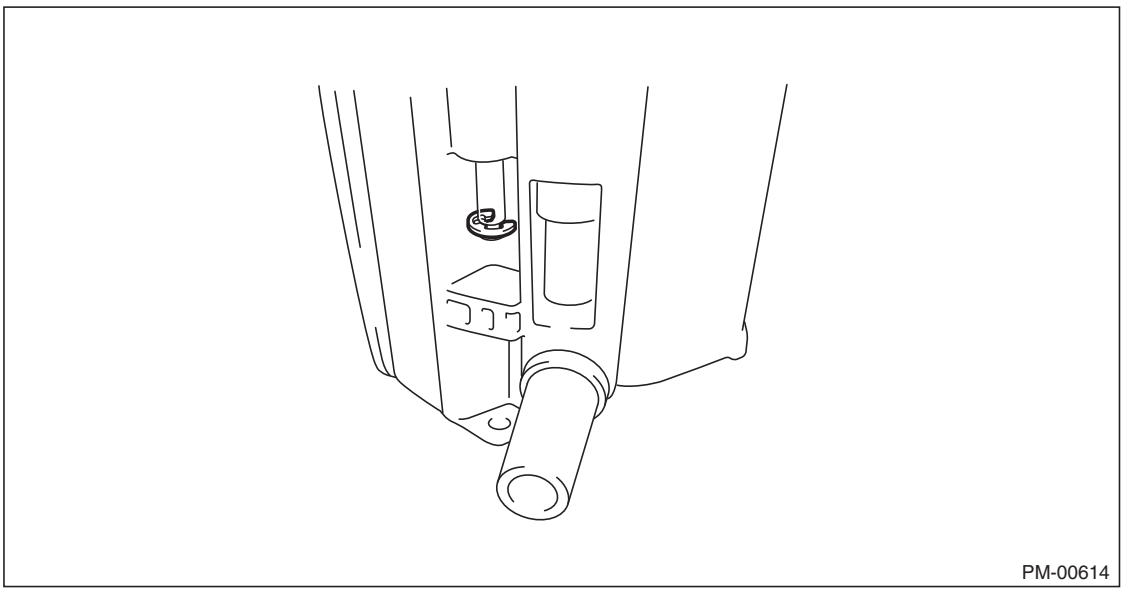

45) Connect the fuel pump harness connector and secure with the clip.

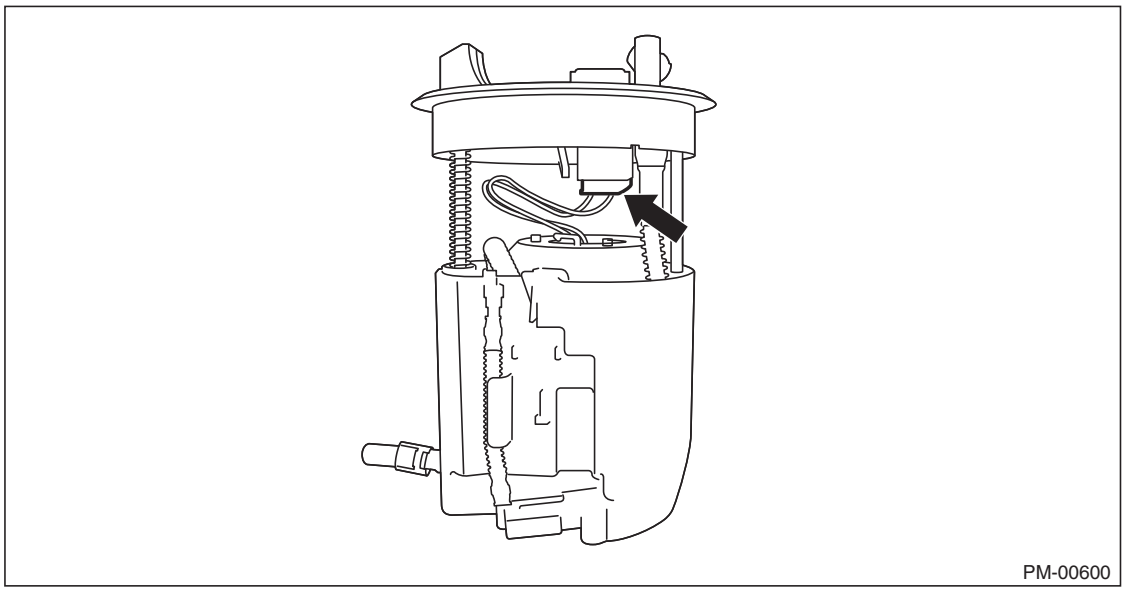

46) Engage the tab, and install the fuel sender gauge assembly No. 2 to the fuel delivery tube.
47) Connect the fuel sender gauge assembly No. 2 connector, and install the harness to the clamp.
48) Inspect the fuel level sensor.
    (1) Check that the fuel sender gauge assembly is free of damage.
    (2) Check the dimensions from the float positions of floats F (upper limit) and E (lower limit) to the fuel tank seating surface.

	mm (in)
Float position F (upper limit) to fuel tank seating surface	121 — 129 (4.76 — 5.08)
Float position E (lower limit) to fuel tank seating surface	14.7 — 22.7 (0.58 — 0.89)

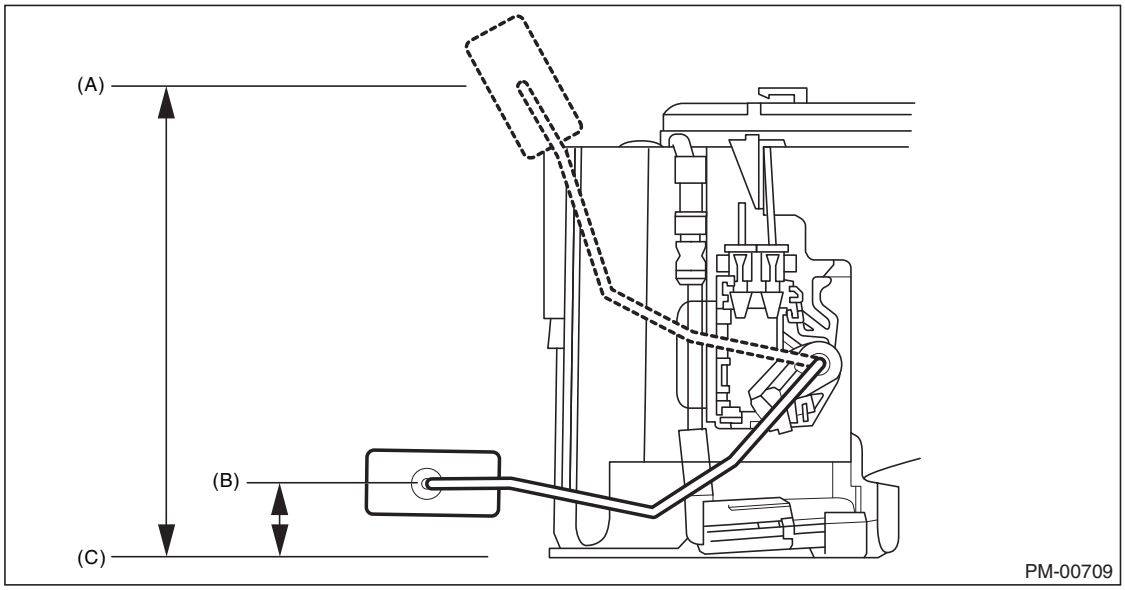

(A) Float position F (upper limit)
(B) Float position E (lower limit)
(C) Fuel tank seating surface

49) Install a new gasket to the fuel suction tube assembly (with pump & gauge).

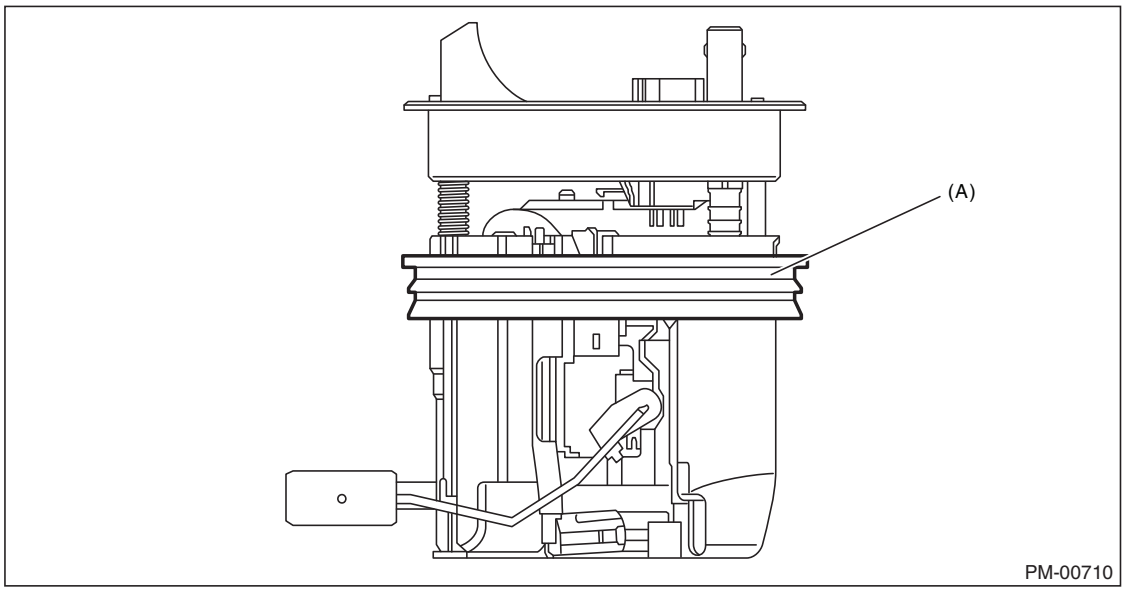

(A) Gasket

50) Connect the fuel tube connector.

CAUTION:
- **Do not pull with excessive force on the tube when connecting the fuel tube connector.**
- **Make sure not to bend the arm of the fuel sender gauge.**

51) Insert the fuel suction tube assembly (with pump & gauge) into the fuel tank, and install the fuel suction tube assembly to which a new gasket was installed to the fuel tank.

CAUTION:
Check the entire circumference of the gasket and make sure that it is not curled or displaced when installing the gasket to the fuel tank. Such installation defects will result in fuel leakage.

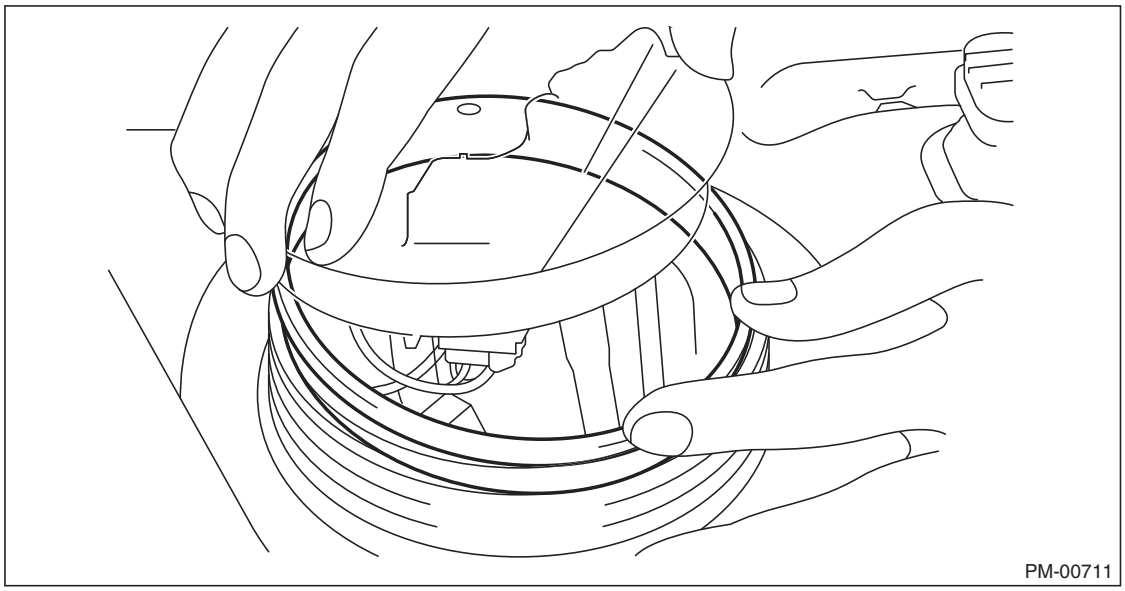

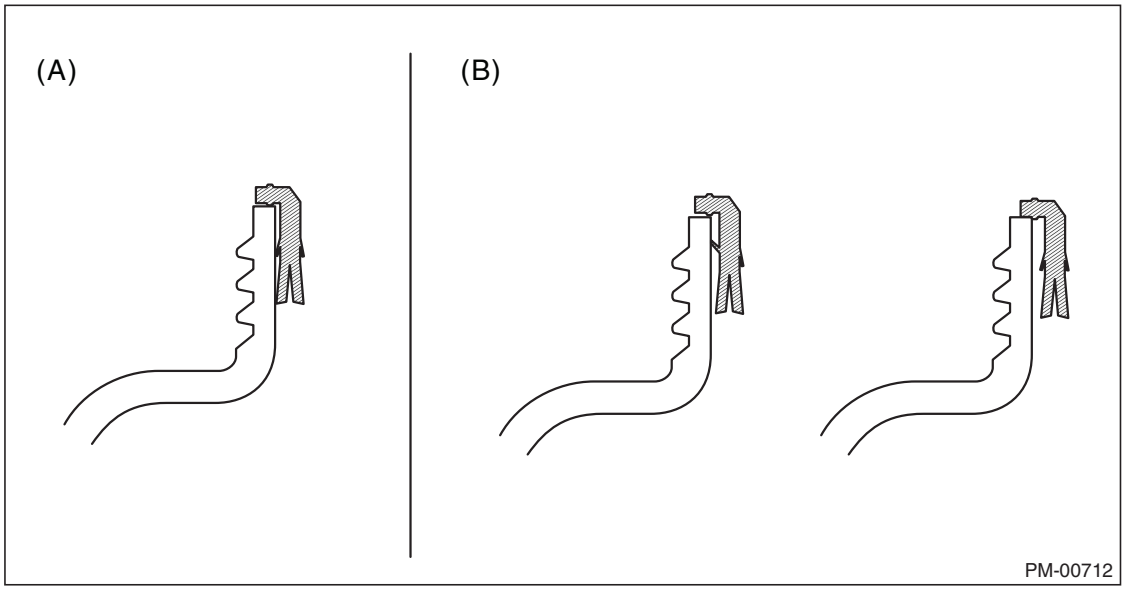

(A) OK
(B) NG

52) Apply gasoline to the gasket.

CAUTION:
- **When applying gasoline to the gasket, apply it to the area as shown in the figure.**
- **Be careful not to spill gasoline on the screw section of the fuel tank.**
- **Make sure the sealing portion is free from fuel or foreign matter.**

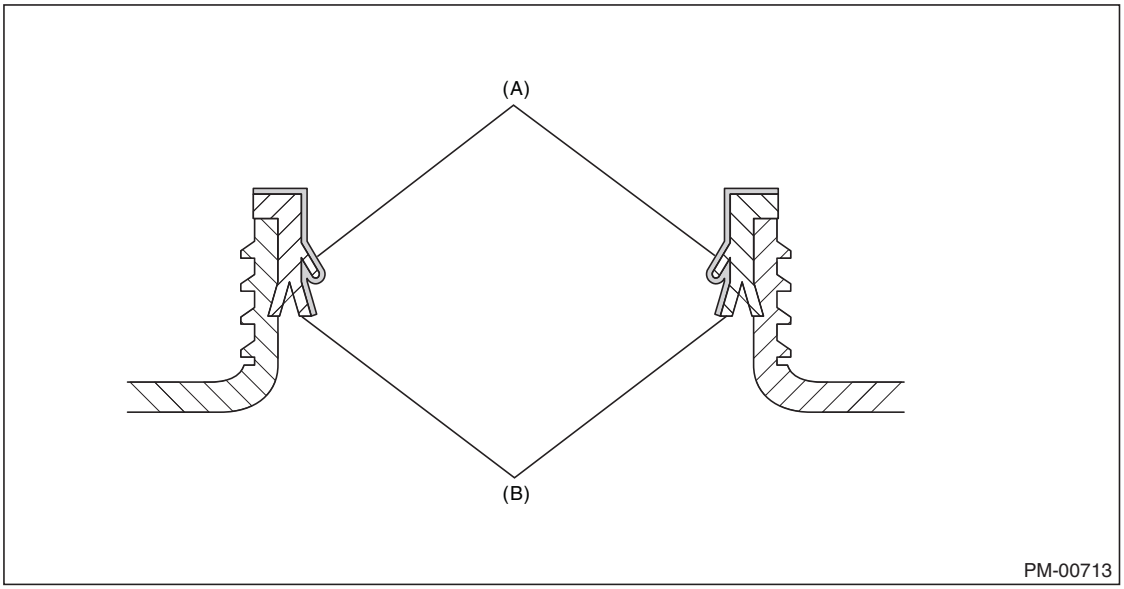

(A) Areas of gasoline application
(B) Gasket

53) Set the fuel pump within the installation position range marks on the fuel tank.

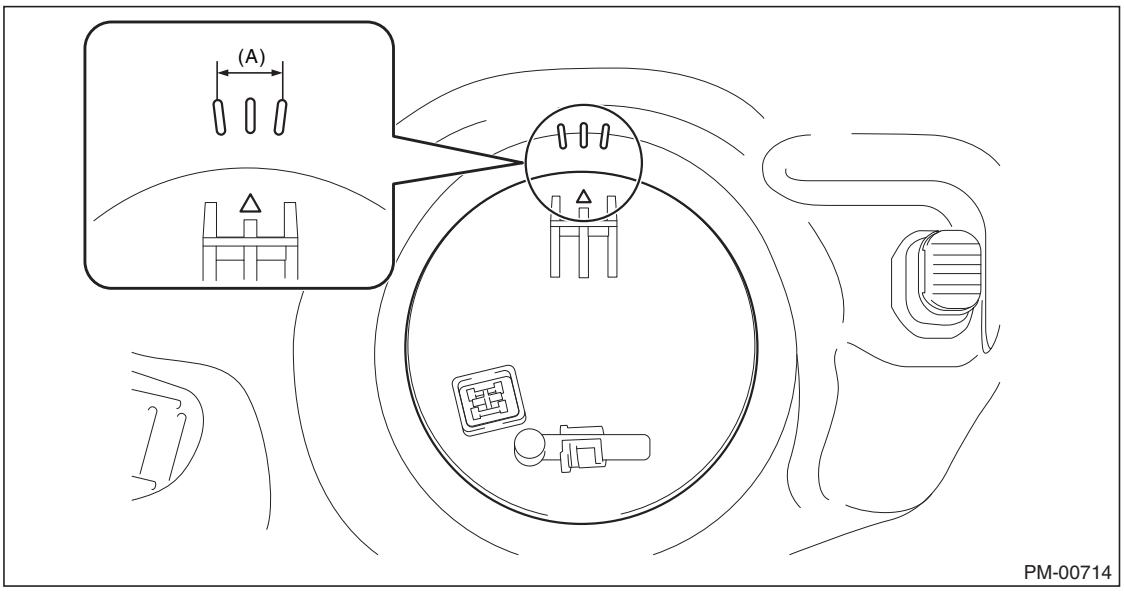

(A) Installation position range mark

54) Install a new sheet ring and fuel pump gauge retainer, and temporarily tighten the fuel pump gauge retainer.

55) Tighten the fuel pump gauge retainer using the ST.

CAUTION:
- **Do not use any tool other than the ST.**
- **Be careful not to damage the tube with the ST.**
- **Before setting the ST, move the tube to a position outside the ST.**
- **Make sure that the position mark on the fuel pump is located within the installation position range mark on the fuel tank as shown in the figure.**
- **After tightening to the specified torque, check the torque by retightening to the specified torque.**

NOTE:
Securely set the ST notch onto the rib part of the fuel pump gauge retainer.
ST 42099CA000 ST FUEL PUMP

Tightening torque:
85 N·m (8.7 kgf-m, 62.7 ft-lb)

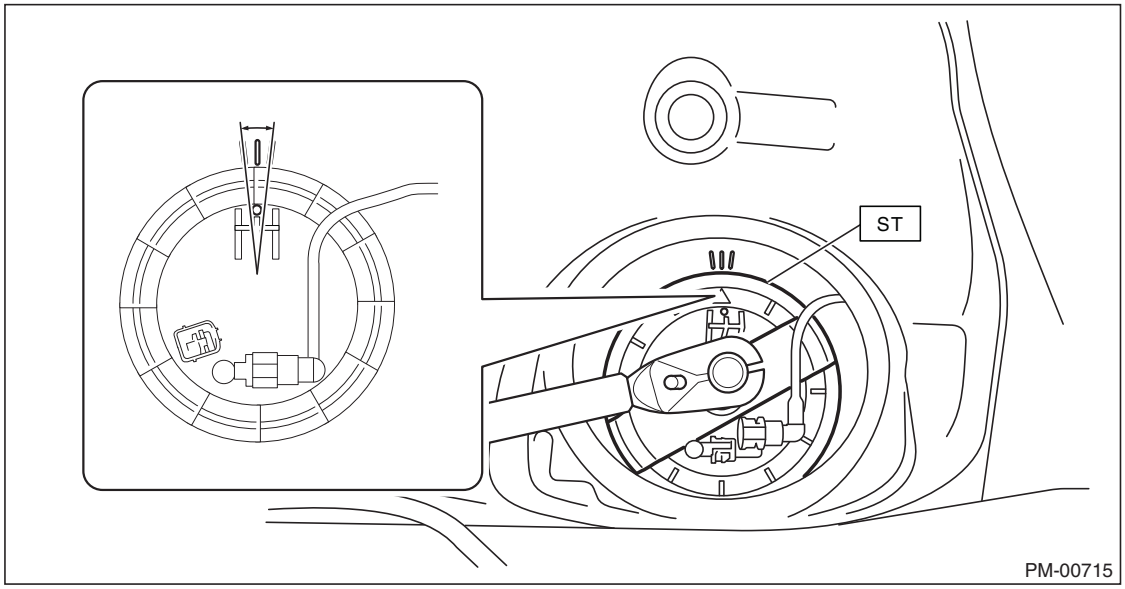

56) Connect the fuel pump tube connector.
57) Install the fuel pump tube to the fuel tank.
58) Connect the fuel pump connector.
59) Connect the ground cable to battery.
60) Apply fuel pressure and check that there are no leaks in the fuel system using the Subaru Select Monitor.
61) Install rear floor service hole cover No. 2 using new butyl tape.
62) Install the separator-type rear seat cushion assembly LH.

B: INSPECTION

If the filter is clogged, or if the replacement interval has been reached, replace it.

9. Air Cleaner Element

A: INSPECTION

1) Check that the air cleaner element has no deformation, cracks or other damages.
2) Check the air cleaner element for excessive dirt.

B: REPLACEMENT

CAUTION:
Do not place an excessive load on the air cleaner case with grasping with your hands in order to prevent damaging the plastic bracket.

1) Remove the two clips from the air cleaner case (front).

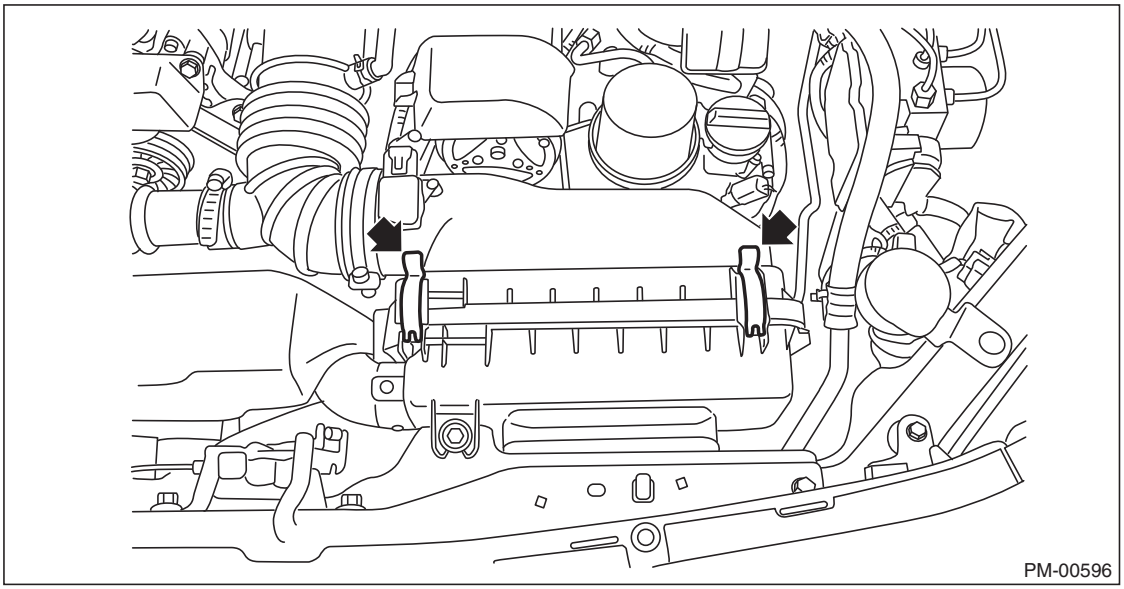

2) Lift up the air cleaner case (rear), and release the two tabs fit into the air cleaner case (front).

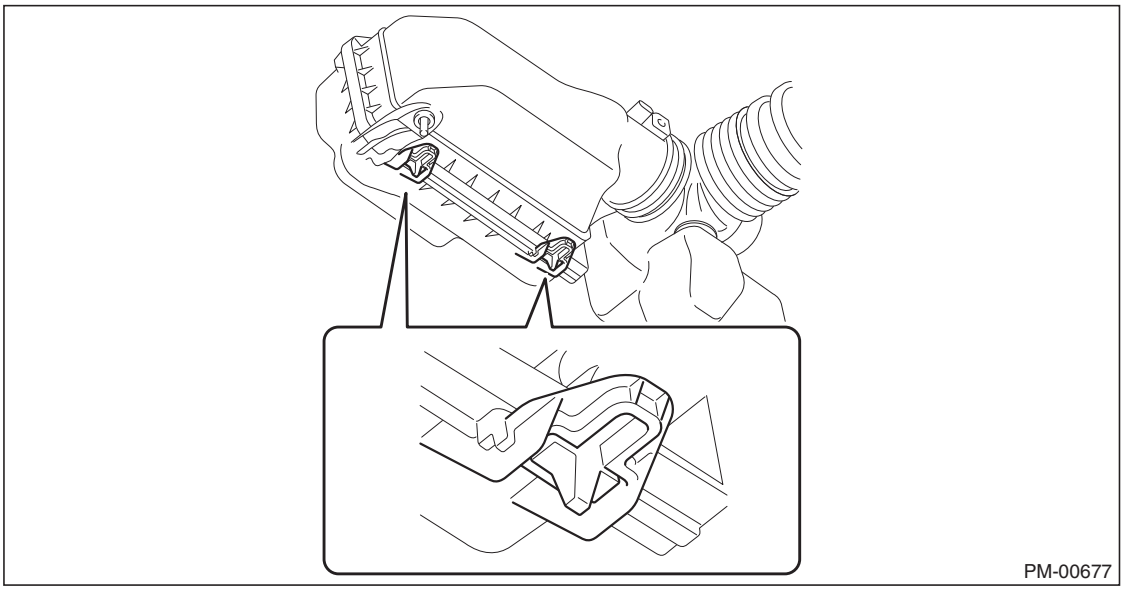

3) Raise the air cleaner case (rear) at an angle as shown in the figure, and remove the air cleaner filter element.

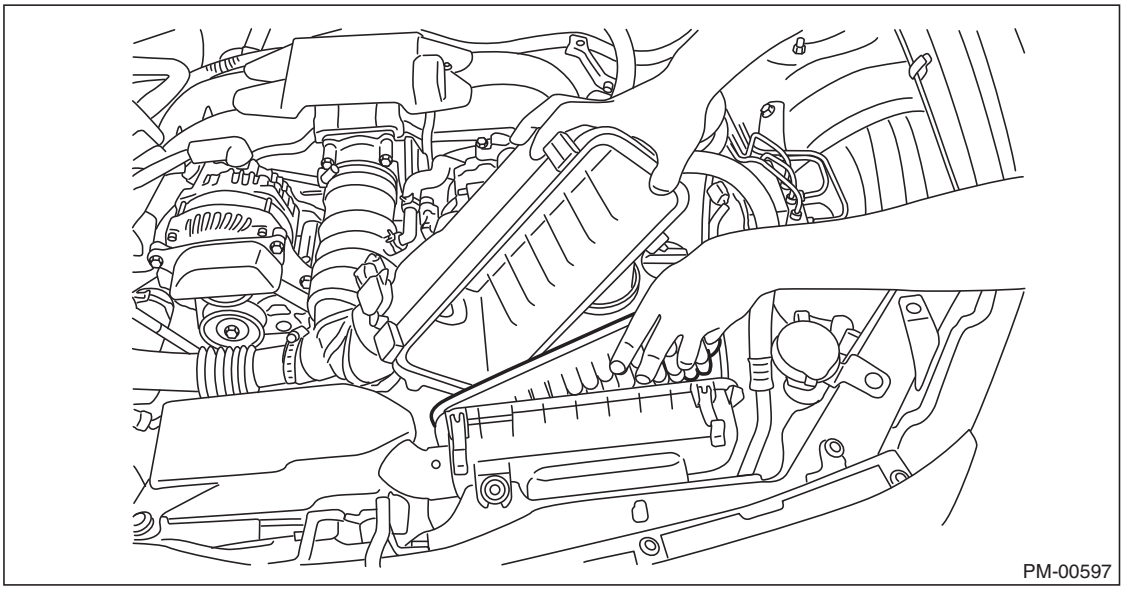

4) Raise the air cleaner case (rear) at an angle, and install the air cleaner filter element.
5) Connect the two tabs of the air cleaner case (rear) to the air cleaner case (front).
6) Install the two clips.

CAUTION:
- **Check that protrusions for left/right alignment on the air cleaner cases are not riding up.**
- **Make sure that the two tabs on the bottom of the air cleaner case are securely connected.**

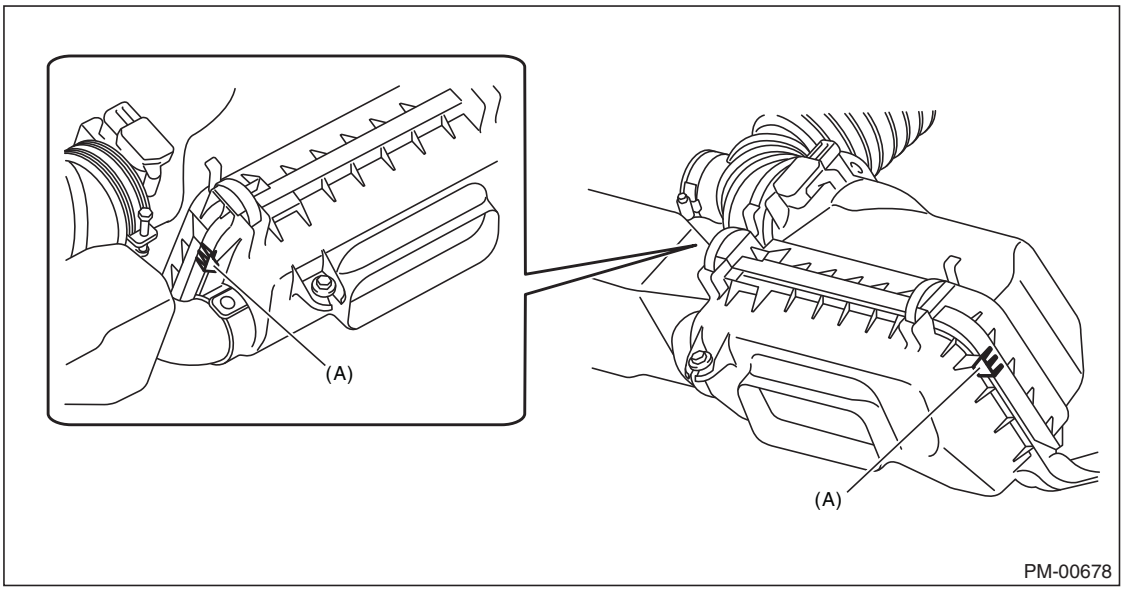

(A) Protrusions for alignment

10. Cooling System

A: INSPECTION

1. RADIATOR

1) Check that the radiator does not have deformation, cracks or damage.
2) Check that the hose has no cracks, damage or loose part.
3) Check that there is no engine coolant leakage from the hose connection parts.
4) Remove the radiator cap, fill the radiator with engine coolant, and then install the radiator cap tester to the filler neck of radiator.

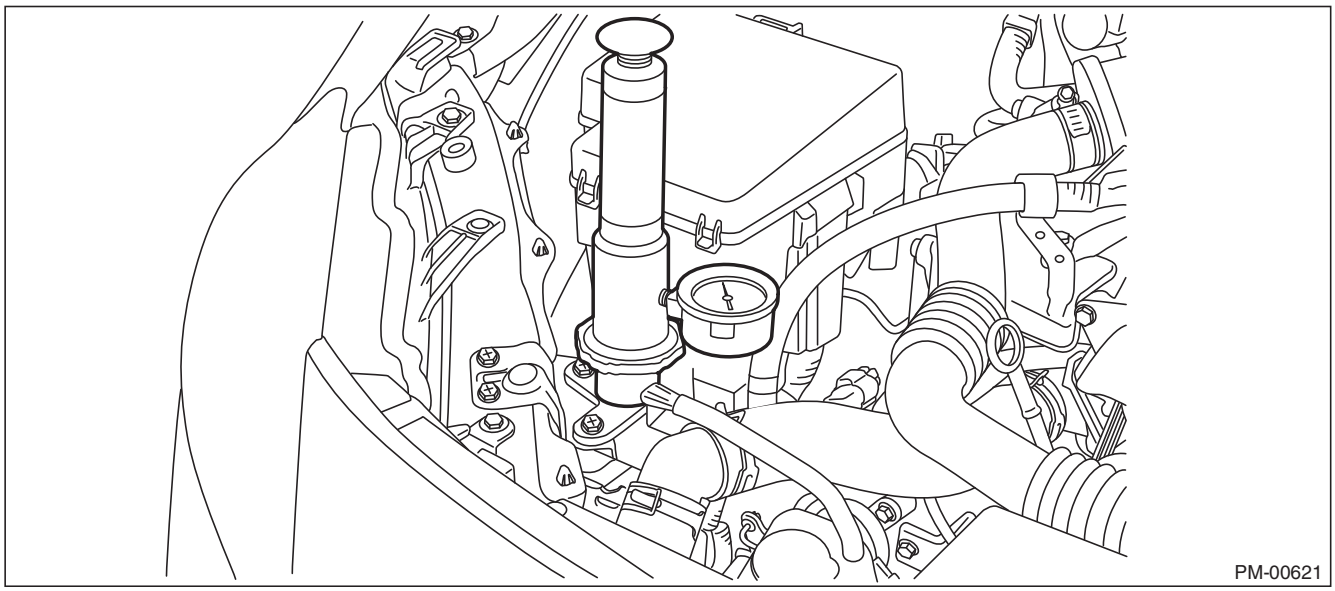

5) Apply a pressure of 157 kPa (1.6 kgf/cm^2, 23 psi) to the radiator, and check the following items.
- Leakage from the radiator or its vicinity
- Leakage from the hose or its connections

CAUTION:
- **Engine should be turned off.**
- **Wipe engine coolant from check points in advance.**
- **Be careful of engine coolant from spurting out when removing the radiator cap tester.**
- **Be careful not to deform the filler neck of radiator when installing and removing the radiator cap tester.**

11. Engine Coolant

A: INSPECTION

1) Park the vehicle on a level surface.
2) Check that the reservoir tank fluid level is between the FULL and LOW lines when the engine is cool.

CAUTION:
- **Do not substitute water for the coolant fluid.**
- **Refer to the "RM" section for the coolant to be used.**

NOTE:
If the coolant level is low, check for leakage and add coolant until it reaches the FULL line.

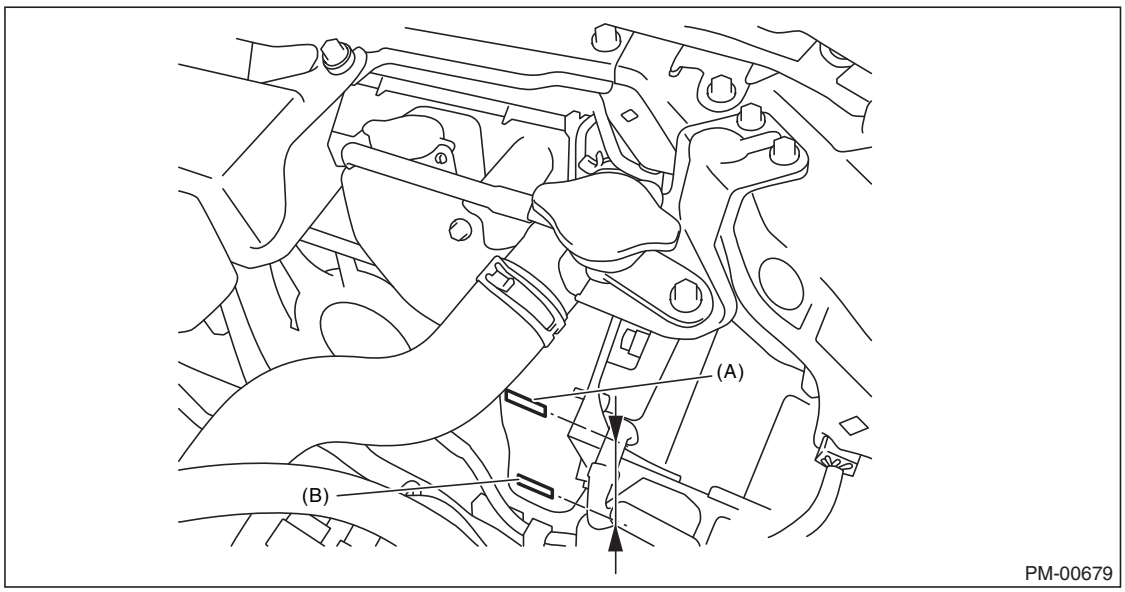

(A) FULL
(B) LOW

3) Remove the radiator cap and check that the coolant is filled up to the radiator filler neck.

B: REPLACEMENT

CAUTION:
Do not remove the radiator cap sub-assembly while the engine and radiator are hot in order to prevent possible burns. There is a possibility of fluid or steam surging out due to pressurization.
1) Lift up the vehicle.

2) Remove the service hole cover of the front bumper under cover.

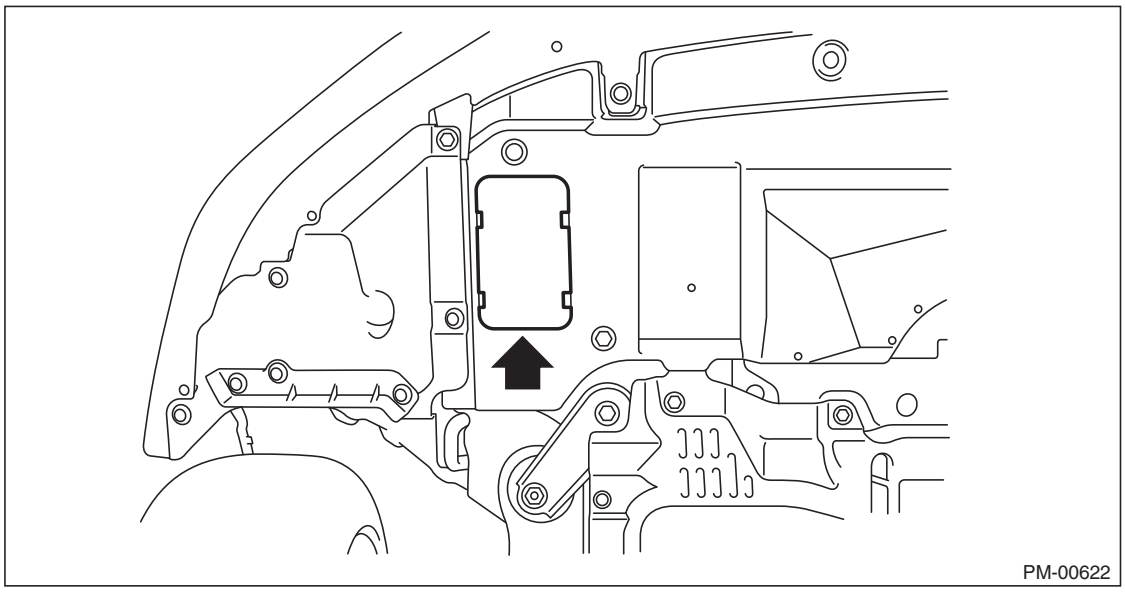

3) Install a hose with an inner diameter of ϕ8 mm (0.31 in) to the drain plug.

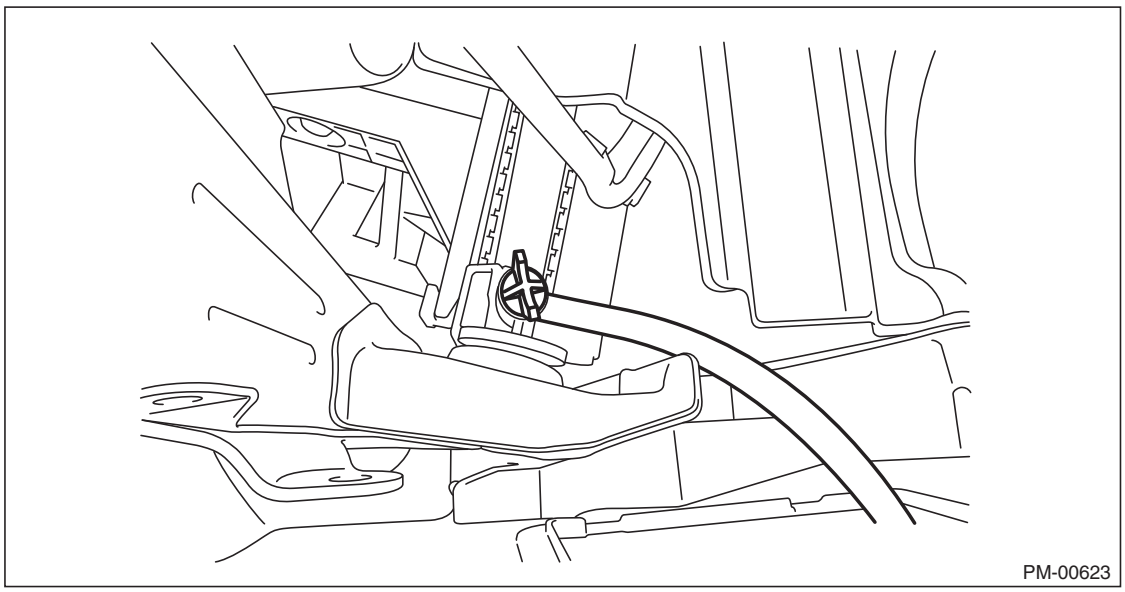

4) Loosen the radiator drain cock plug and drain the engine coolant into a container.
5) Remove the radiator cap.
6) After draining, tighten the drain plug, and install the service hole cover.
7) Lower the vehicle.
8) Pour engine coolant into the radiator up to the filler neck position.

Recommended engine coolant:
Refer to "RM" section. <Ref. to RM-2, LUBRICANTS, RECOMMENDED MATERIALS, Recommended Materials.>

Engine coolant level:
Refer to the "SPC" section. <Ref. to SPC-4, CAPACITY, BRZ.>

CAUTION:
The SUBARU Super Coolant contains anti-freeze and anti-rust agents, and is especially made for Subaru engines with an aluminum cylinder block. Be sure to use SUBARU Super Coolant, since other coolant may cause corrosion.

9) Open the air bleeding plug on the heater hose side.

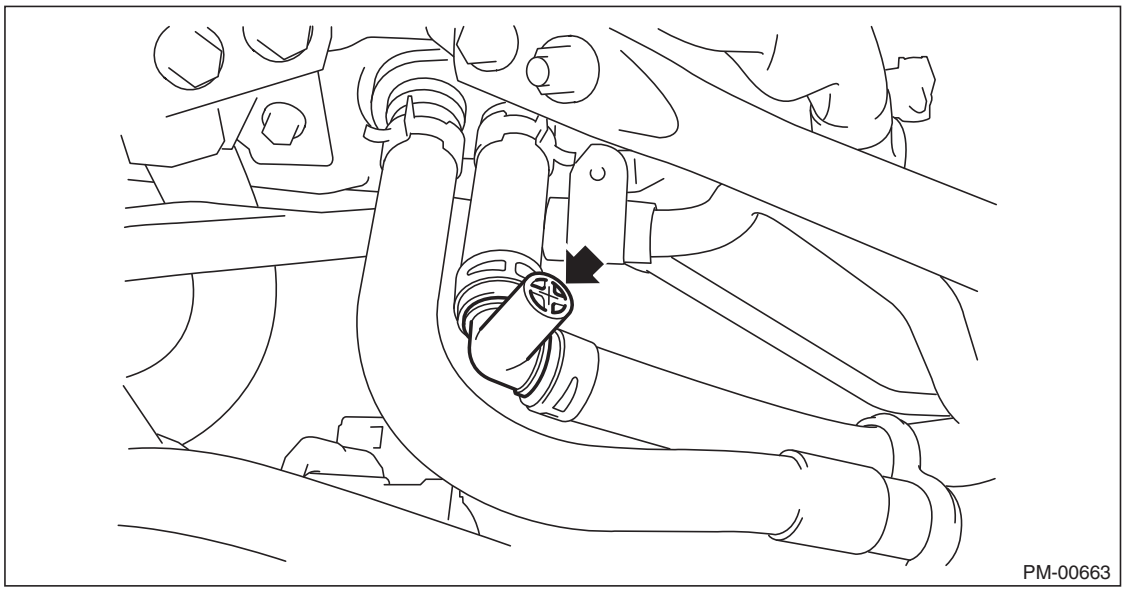

10) If the engine coolant level drops, add engine coolant into radiator up to the filler neck position.
11) Close the air bleeder valve when engine coolant comes out of the air bleeder plug on the heater hose side.
12) Fill engine coolant into the reservoir tank up to “FULL” level.
13) Close the radiator cap and start the engine. Race 5 to 6 times at 3,000 rpm or less, then stop the engine. (Complete this operation within 40 seconds.)
14) Wait for one minute after the engine stops, and open the radiator cap. If the engine coolant level drops, open the air bleeding plug on the heater hose side, add engine coolant into the radiator up to the filler neck position, and close the air bleeding plug.
15) Perform the procedures 13) and 14) again.
16) Attach the radiator cap and reservoir tank cap properly.
17) Start the engine and operate the heater at maximum hot position and the blower speed setting to “LO”.
18) Run the engine at 2,000 rpm or less until radiator fan starts and stops.

CAUTION:
Be careful with the engine coolant temperature to prevent overheating.
19) Stop the engine and wait until the engine coolant temperature lowers to 30°C (86°F) or less.
20) Open the radiator cap. If the engine coolant level drops, add engine coolant into the radiator up to the filler neck position and the reservoir tank to “FULL” level.
21) Attach the radiator cap correctly.
22) Set the heater setting to maximum hot position and the blower speed setting to “LO” and start the engine. Perform racing at 3,000 rpm or less. If the flowing sound is heard from the heater core, repeat the procedures from step 18).

12. Clutch System

A: INSPECTION AND ADJUSTMENT

1. INSPECTION

Move the clutch pedal in the lateral direction with a force of approximately 10 N (1 kgf, 2 lbf) to check that the clutch pedal deflection is within the service limit.

CAUTION:
If it exceeds the service limit, replace the clutch pedal assembly with a new part.

Deflection of the clutch pedal:
Service limit
4.0 mm (0.157 in) or less

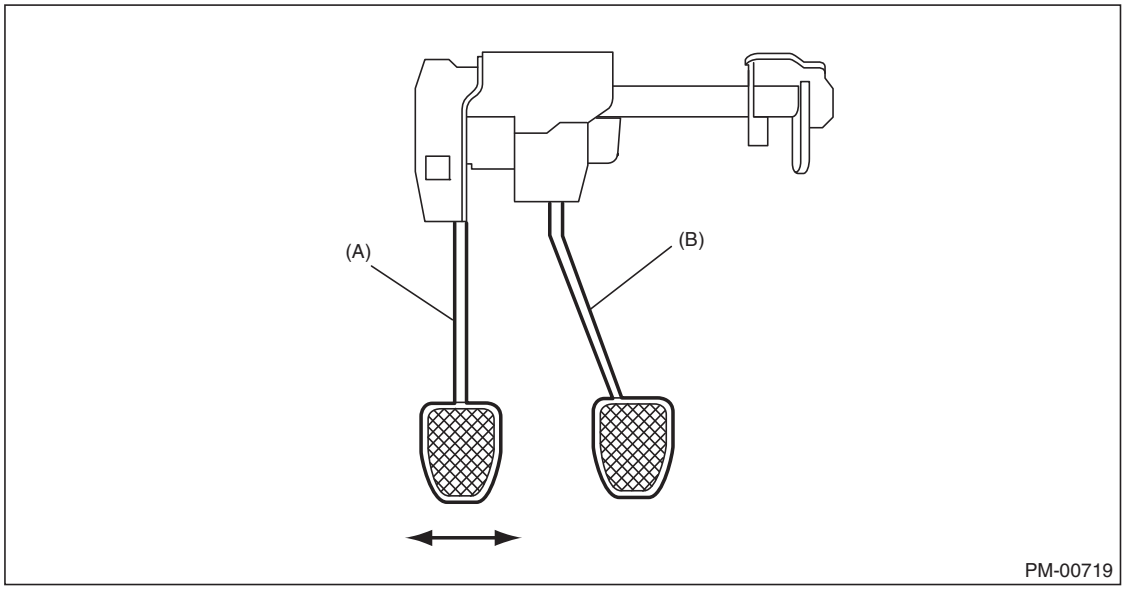

(A) Clutch pedal
(B) Brake pedal

2. ADJUSTMENT

1) If the full stroke of the clutch pedal is not within the specified value, loosen the lock nuts of the clutch switch and adjust the full stroke of the clutch pedal with the clutch switch.

CAUTION:
When adjusting the full stroke of clutch pedal, do not turn the clutch switch.

NOTE:
If the clutch switch cannot adjust the full stroke of clutch pedal to the specified value, adjust it by turning the master cylinder push rod.

Clutch pedal full stroke A:
110 — 115 mm (4.33 — 4.53 in)

Tightening torque:
T: 8 N·m (0.8 kgf-m, 5.9 ft-lb)

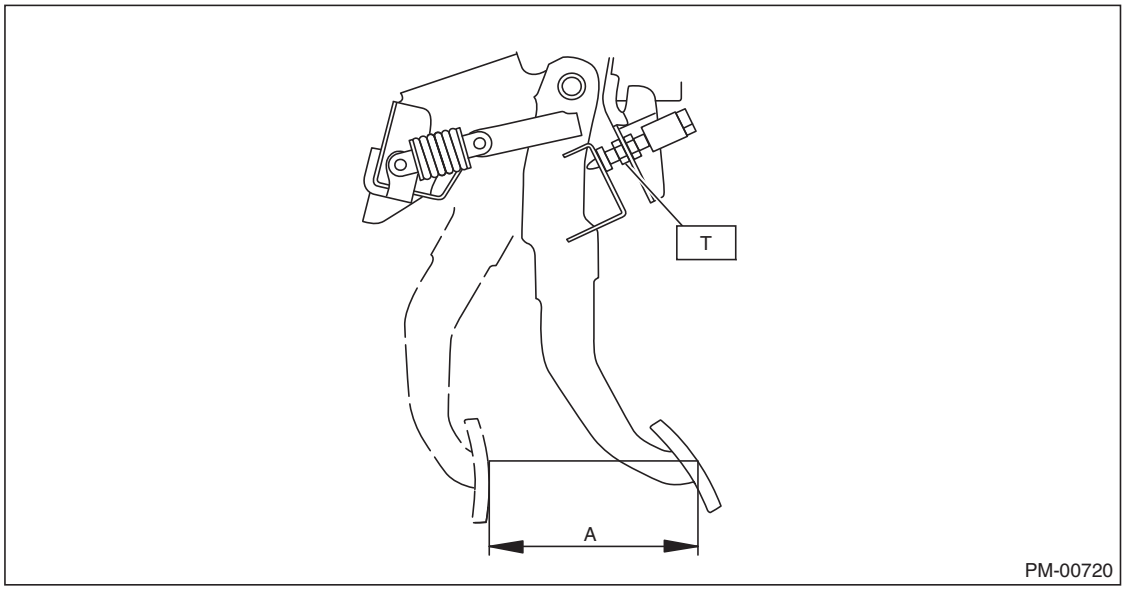

2) Loosen the push rod lock nuts of the master cylinder.

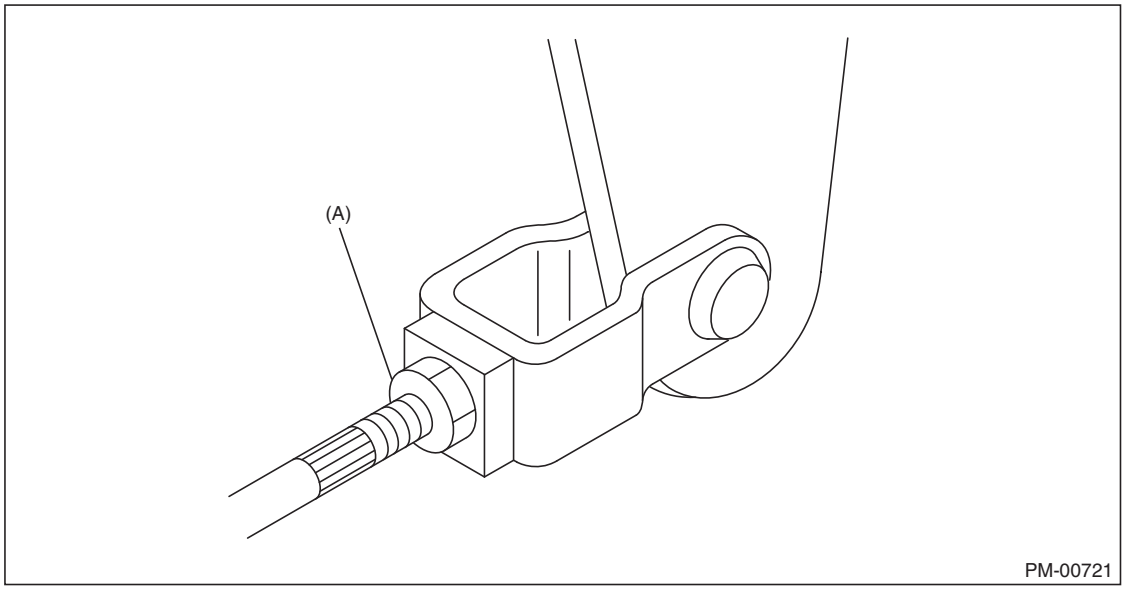

(A) Push rod lock nut

3) Rotate the push rod to adjust.

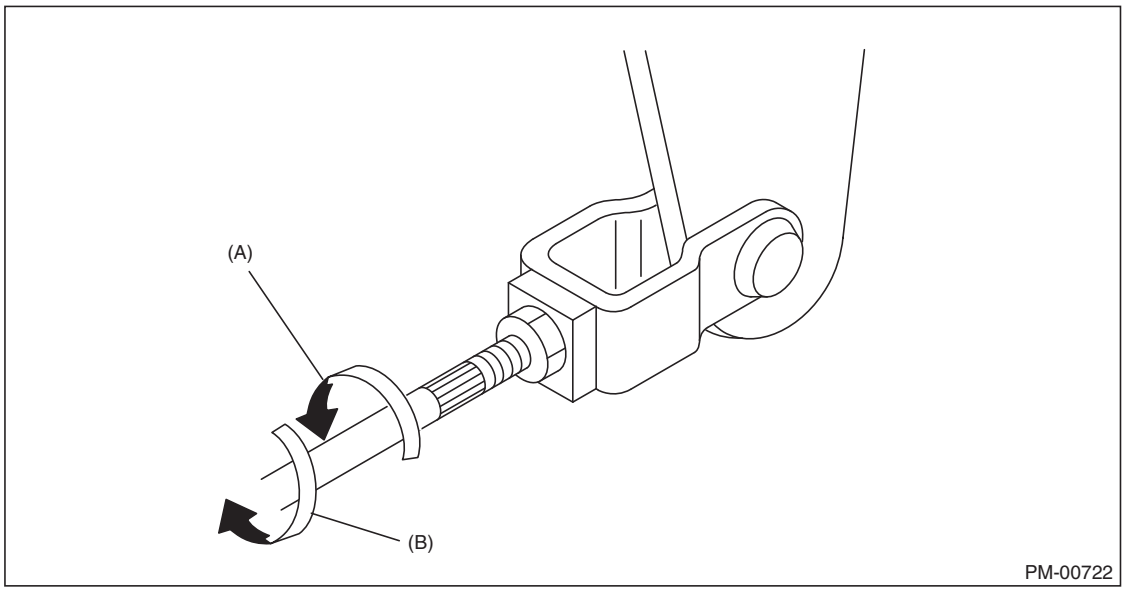

(A) In the longer direction
(B) In the shorter direction

4) Make sure that the clutch pedal contacts the clutch pedal bracket stopper when the clutch pedal is at the maximum stroke position.
5) Make sure that the clutch pedal contacts the clutch switch side when the pedal is released.
6) Turn the push rod to shorten until a clearance is gained on the clutch switch side.

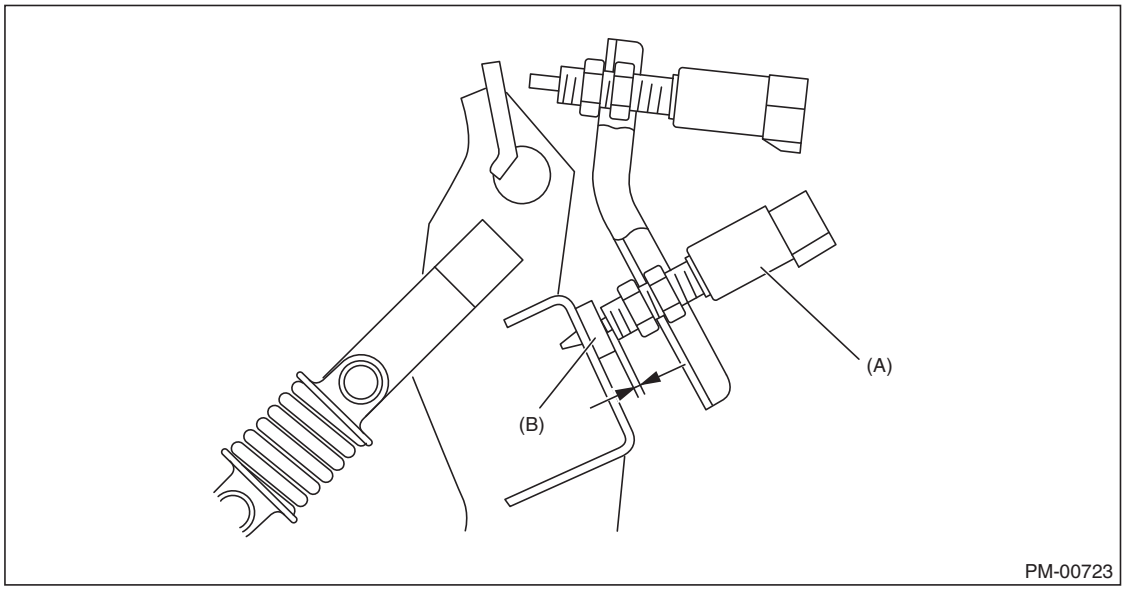

(A) Clutch switch
(B) Stopper

7) Turn the push rod to lengthen until clutch pedal contacts the clutch switch.

8) Turn further in the direction that will shorten the push rod by 270°.

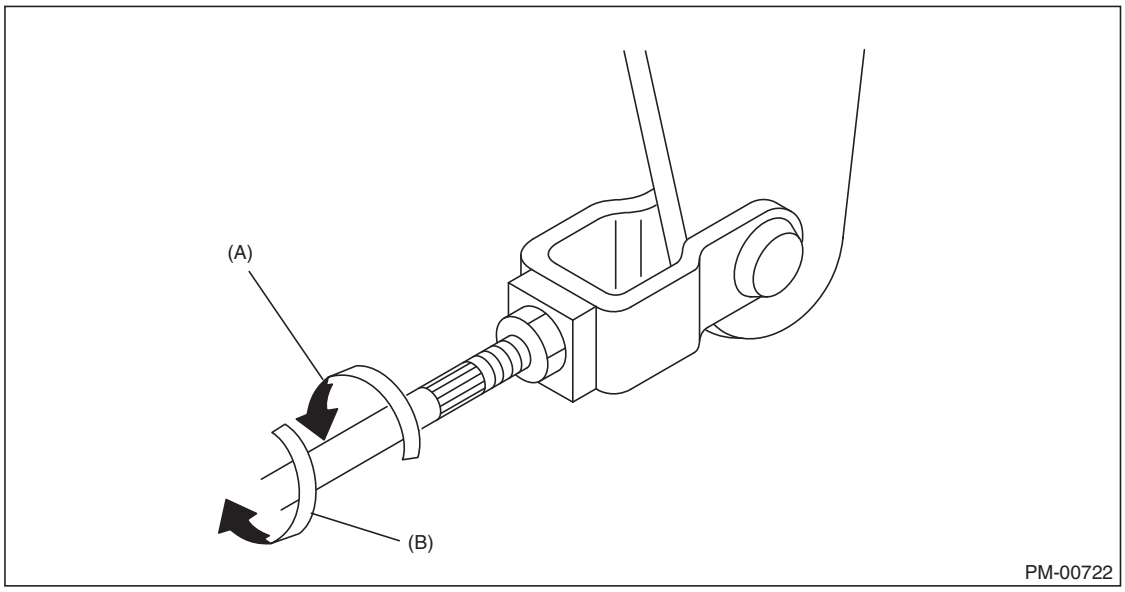

(A) In the longer direction
(B) In the shorter direction

9) Check that the clevis pin moves smoothly by moving it in the left and right directions.
10) Tighten the push rod lock nut of the master cylinder.

Tightening torque:
T: 10 N·m (1.0 kgf-m, 7.4 ft-lb)

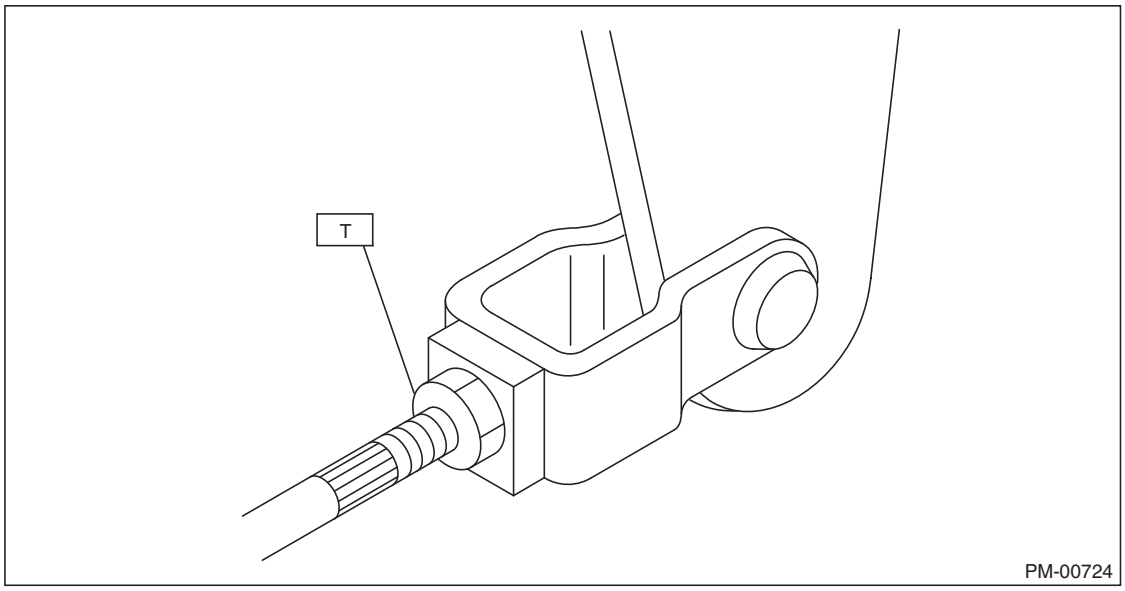

11) Depress and release the clutch pedal two or three times to ensure that the clutch pedal and release lever operate smoothly. If the clutch pedal and release lever do not operate smoothly, bleed air from the clutch hydraulic system.
12) Measure the clutch pedal full stroke length again to ensure that it is within specifications. If it is not within specifications, repeat adjustment procedures again from the beginning.

Clutch pedal full stroke:
110 — 115 mm (4.33 — 4.53 in)

13) Push the release lever until the operating cylinder push rod retracts. Make sure that the clutch fluid level in the reservoir tank increases. If the clutch fluid level increases, the hydraulic clutch is properly adjusted. If the clutch fluid level does not increase or the push rod does not retract, replace the master cylinder with a new part.

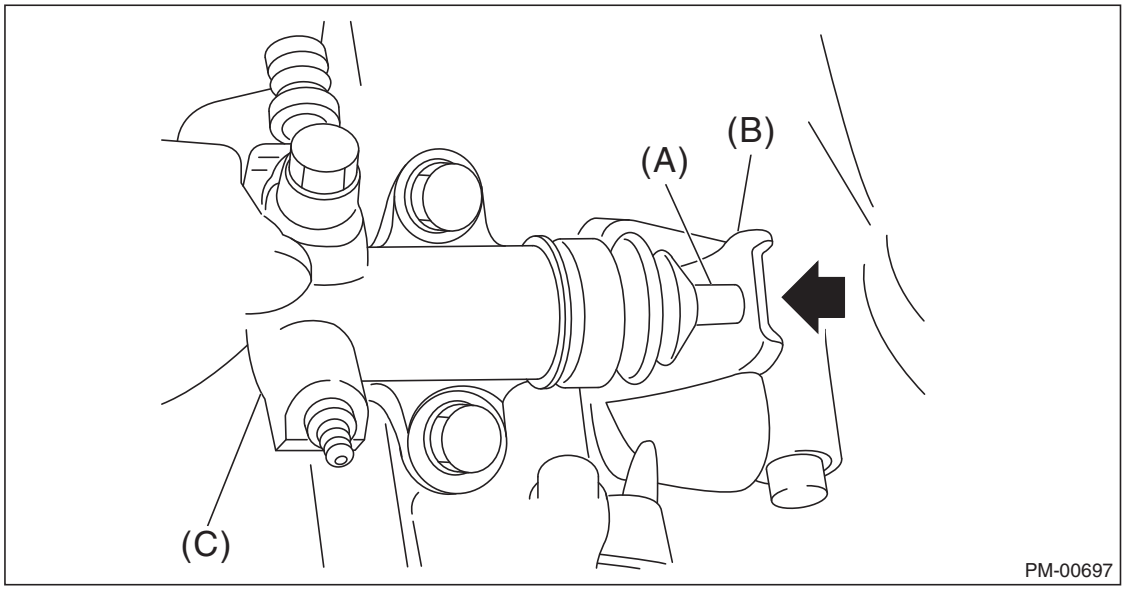

(A) Push rod
(B) Release lever
(C) Operating cylinder

14) Push the release lever until the operating cylinder push rod retracts. Check that the clutch fluid level in the reservoir tank increases.

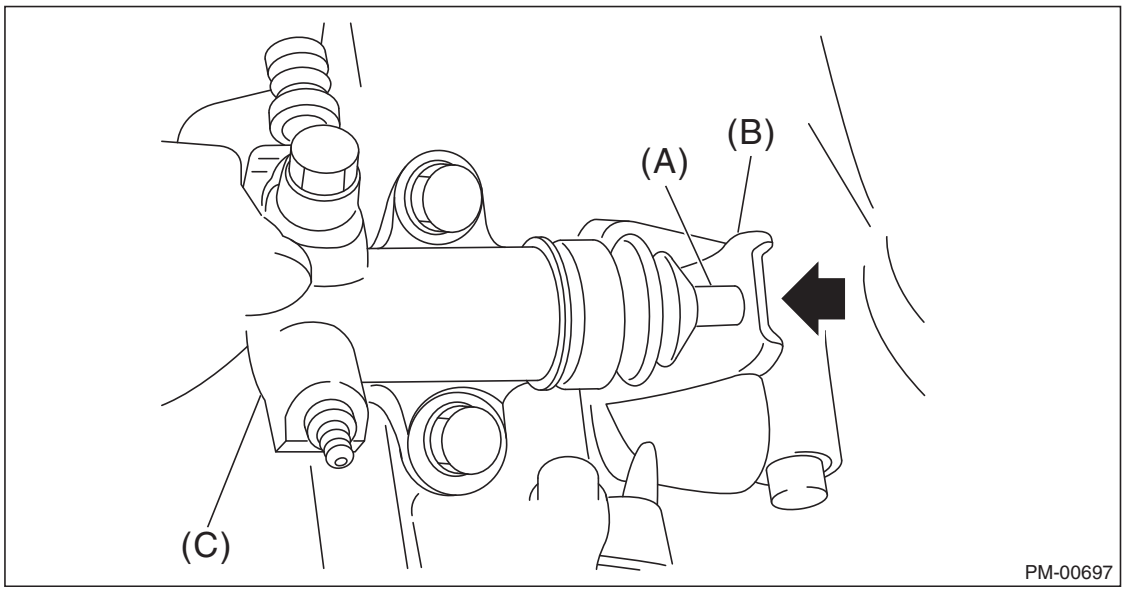

(A) Push rod
(B) Release lever
(C) Operating cylinder

15) If the clutch fluid level increases, hydraulic clutch play is correct.
16) If the clutch fluid level does not increase or push rod does not retract, readjust the clutch pedal.
17) Check the clutch fluid level in the reservoir tank.

13. Transmission Gear Oil

A: INSPECTION

Check for leakage of gear oil from the transmission.

B: REPLACEMENT

CAUTION:

- **Immediately after running the vehicle or after idling for a long time, the transmission gear oil will be hot. Be careful not to receive burns.**
- **Be careful not to spill the transmission gear oil on exhaust pipe to prevent it from emitting smoke or causing fires. If transmission gear oil is spilled on the exhaust pipe, wipe it off completely.**

1) Lift up the vehicle.
2) Remove engine under cover No. 1.
3) Remove engine under cover No. 2.
4) Remove the transmission filler plug and gasket.
5) Remove the transmission drain plug and gasket, and drain the oil.

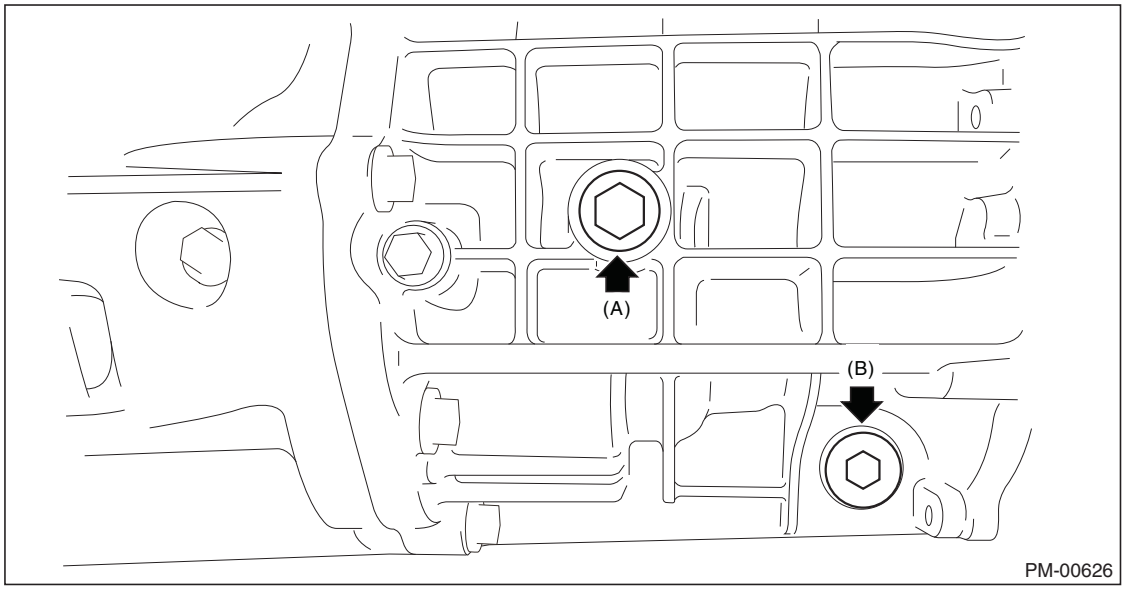

(A) Filler plug
(B) Drain plug

6) Install the transmission drain plug using a new gasket.

Tightening torque:
37 N·m (3.8 kgf-m, 27.3 ft-lb)

7) Pour transmission gear oil to the bottom end of filler plug.

NOTE:
Carefully refill transmission gear oil while checking the level. Excessive or insufficient oil must be avoided.

Recommended gear oil
Refer to "RM" section. <Ref. to RM-2, LUBRICANTS, RECOMMENDED MATERIALS, Recommended Materials.>

Transmission gear oil capacity
Refer to the "SPC" section. <Ref. to SPC-4, CAPACITY, BRZ.>

8) Tighten the filler plug using a new gasket.

Tightening torque:
37 N·m (3.8 kgf-m, 27.3 ft-lb)

9) Check that there is no oil leakage.

10) Install engine under cover No. 2.
11) Install engine under cover No. 1.

14. Automatic Transmission Fluid

A: INSPECTION

Check for leakage of ATF from transmission.

B: REPLACEMENT

1) Lift up the vehicle and maintain in a horizontal position.[*1]
2) Remove engine under cover No. 1.
3) Remove engine under cover No. 2.
4) Remove the drain plug and gasket, and drain the fluid.[*2]
5) Temporarily tighten the drain plug using a new gasket.[*3]

NOTE:
Replace the gasket and perform final tightening according procedures [*16].
6) Remove the refill plug (A) and O-ring.[*4]
7) Remove the overflow plug (B) using a socket hexagon wrench.[*5]

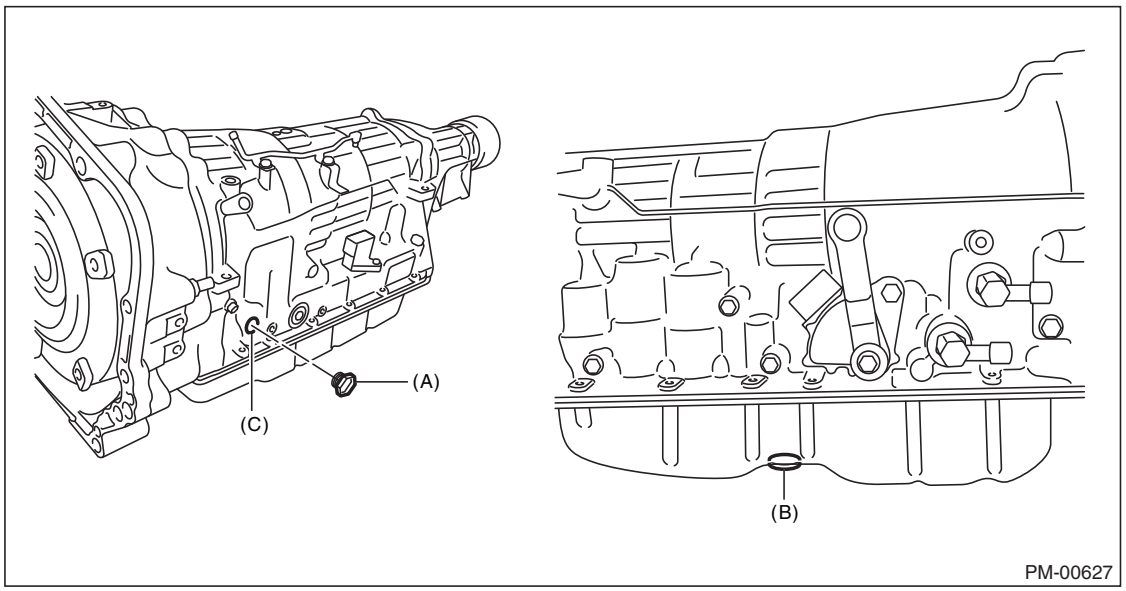

(A) Refill plug
(B) Overflow plug
(C) Refill hole

8) Add fluid through the refill hole until the fluid flows out of the overflow tube.[*6]

CAUTION:
- **Use auto-fluid WS.**
- **Slowly add the fluid. Adding the fluid rapidly can cause the fluid to hit internal parts and splash around resulting in fluid flowing out of the refill hole.**

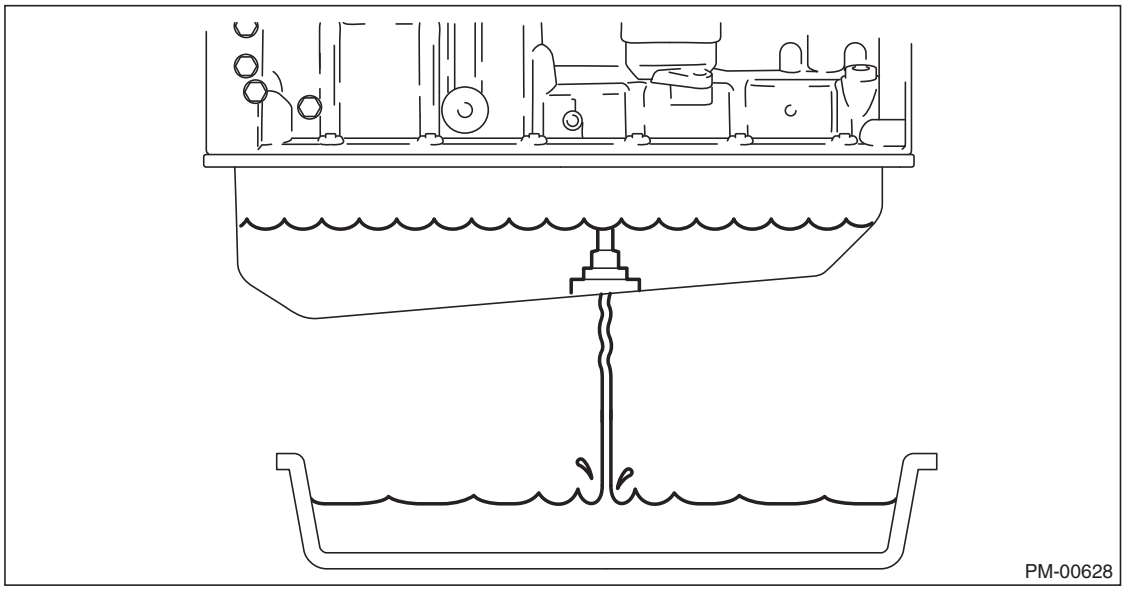

9) Wait until the fluid stops flowing and is only dripping.[*7]
10) Temporarily tighten the overflow plug using a 5-mm (0.2 in) socket hexagon wrench and a new gasket.[*8]
11) Add fluid through the refill hole until reaching the specified amount when removing/installing the oil pan.[*9]

NOTE:
If fluid flows out from the refill hole and you cannot fill the specified amount when adding fluid through the refill hole, perform procedures [*10] to [*15] below in order to circulate fluid until it reaches the oil passages in the transmission and inside the torque converter, then add the specified amount of fluid through the refill hole.

Filling amount (reference):
2.0 L (2.1 US qt, 1.8 Imp qt)
12) Temporarily tighten the refill plug using an O-ring.[*10]
13) Lower the vehicle.[*11]
14) Start the engine.[*12]

NOTE:
Start the engine with the air conditioning turned off.
15) Slowly move the shift lever from the P to M position, and shift again to the P position.[*13]
16) Idle the engine for 30 seconds to warm up the engine.[*14]
17) Turn the key to IG OFF.[*15]
18) Repeat procedures from [*1] to [*15].
19) Repeat procedures from [*1] to [*2].
20) Perform final tightening of the drain plug using a new gasket.

Tightening torque:
20 N·m (2.1 kgf-m, 7.4 ft-lb)
21) Repeat procedures from [*4] to [*11].
22) Adjust the fluid amount. <Ref. to PM-72, AUTOMATIC TRANSMISSION FLUID AMOUNT ADJUSTMENT, ADJUSTMENT, Automatic Transmission Fluid.>
23) Install engine under cover No. 2.
24) Install engine under cover No. 1.
25) Lower the vehicle.
26) Procedures finished.

C: ADJUSTMENT

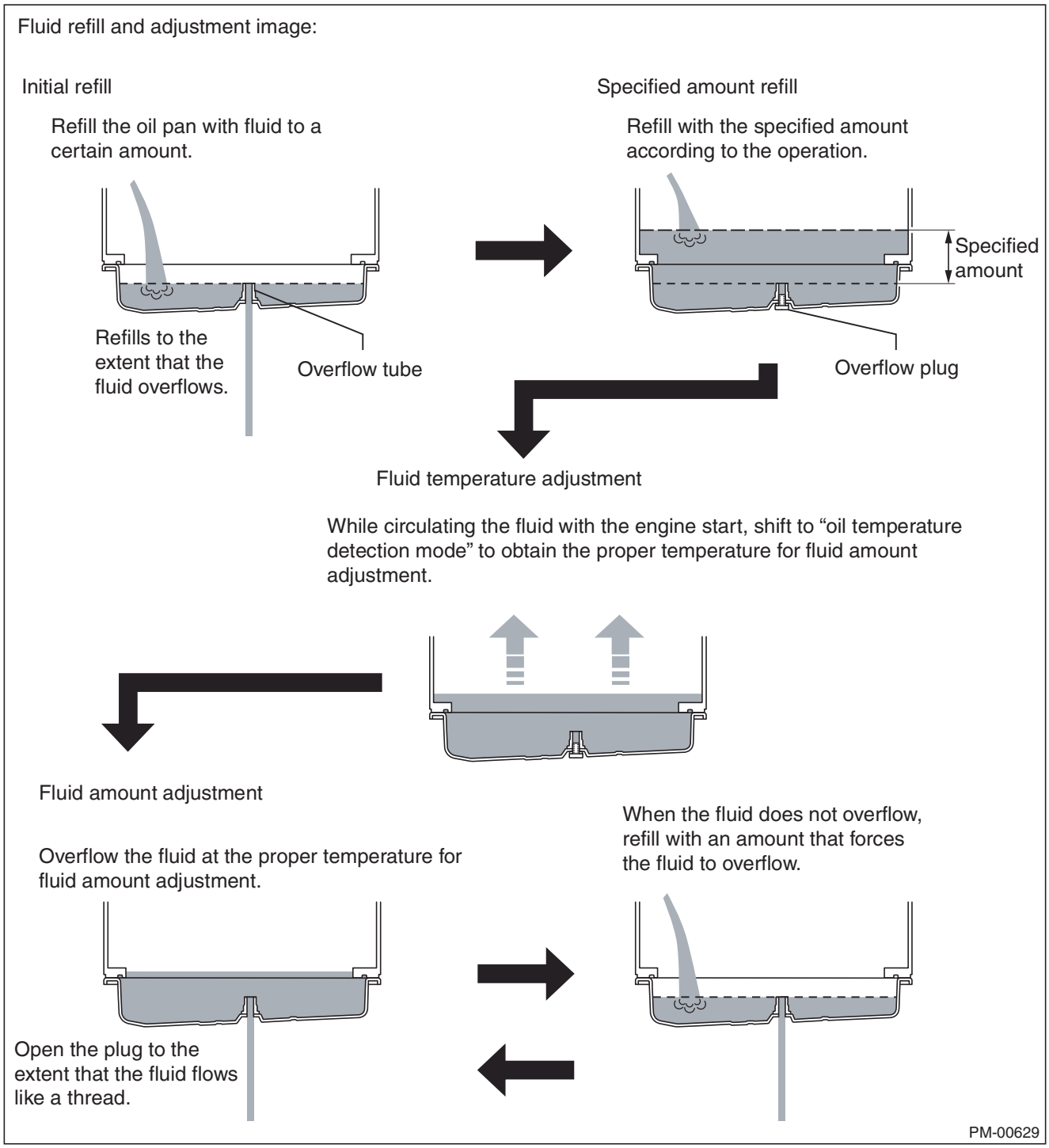

NOTE:
- Use auto-fluid WS for the filling fluid.
- Be sure to always park the vehicle on a level surface when adjusting the fluid amount.
- If it is necessary to replace the automatic transmission assembly, remove/install the oil pan and drain plug, and fill with a large amount of fluid for replacement, perform the procedures from “Automatic transmission fluid filling” to “Automatic transmission fluid amount adjustment”.
- If a small amount of fluid filling is necessary for repairs such as replacing the extension housing rear oil seal or oil bleeding, perform only the procedure “Automatic transmission fluid amount adjustment”.

1. AUTOMATIC TRANSMISSION FLUID FILLING

CAUTION:
- **Perform procedures when the automatic transmission fluid is sufficiently cool.**
- **Always be sure to switch to oil amount adjustment mode when filling automatic transmission fluid.**
- **Slowly add the fluid. Adding the fluid rapidly can cause the fluid to hit internal parts and splash around resulting in fluid flowing out of the refill hole.**

1) Lift up the vehicle and maintain in a horizontal position.
2) Remove engine under cover No. 1.
3) Remove engine under cover No. 2.
4) Remove the refill plug and O-ring.
5) Remove the overflow plug using a socket hexagon wrench.

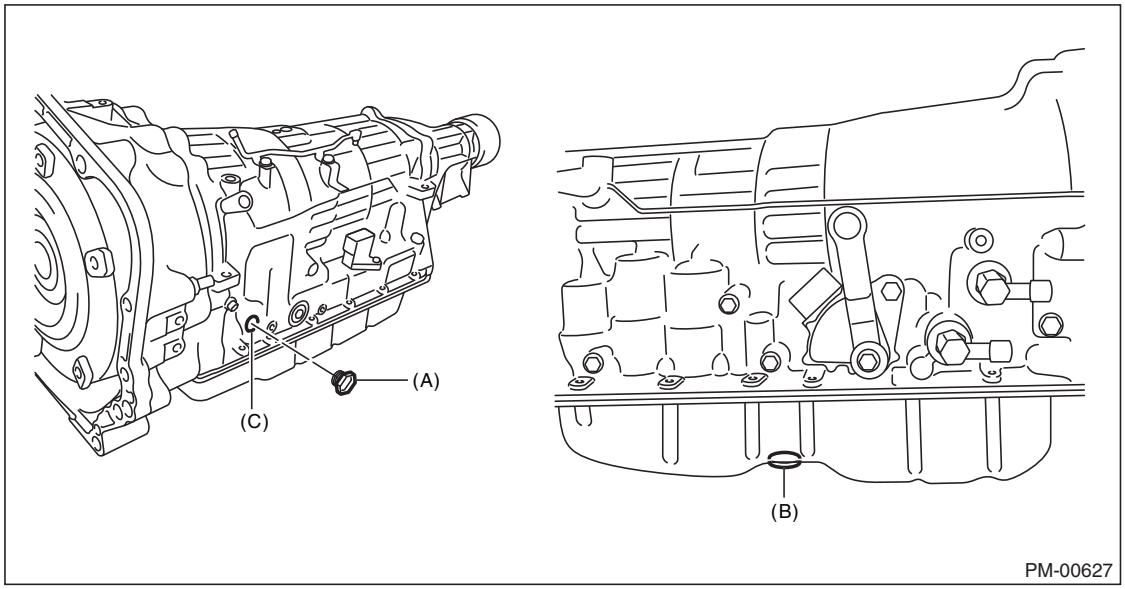

(A) Refill plug
(B) Overflow plug
(C) Refill hole

6) Add fluid through the refill hole until the fluid flows out of the overflow tube.

CAUTION:
Slowly add the fluid. Adding the fluid rapidly can cause the fluid to hit internal parts and splash around resulting in fluid flowing out of the refill hole.

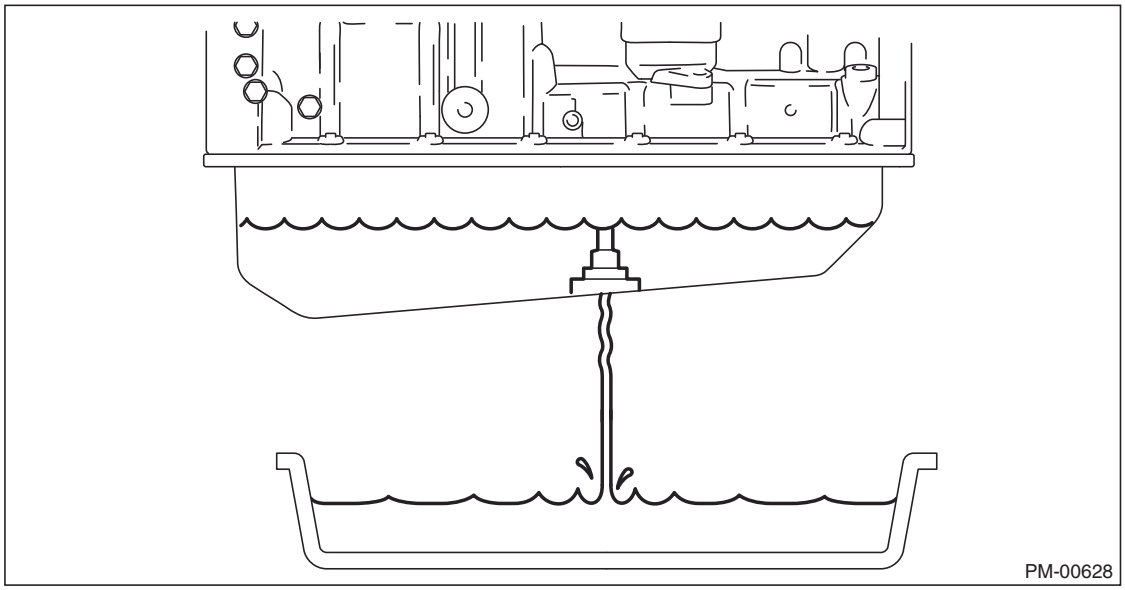

7) Temporarily tighten the overflow plug.
8) Add the specified amount of fluid through the refill hole and temporarily tighten the refill plug.

Filling amount (reference):
2.0 L (2.1 US qt, 1.8 Imp qt)

NOTE:
If fluid flows out from the refill hole and you cannot fill with the specified amount when adding fluid through the refill hole, perform the following procedures to circulate fluid until it reaches the oil passages in the transmission and inside the torque converter.
(1) Temporarily tighten the refill plug.
(2) Start the engine.
(3) Slowly move the shift lever from the P to M position, and shift again to the P position.
(4) Idle the engine for approximately 30 sec.
(5) Turn the key to IG OFF.

2. AUTOMATIC TRANSMISSION FLUID AMOUNT ADJUSTMENT

CAUTION:
- **Perform procedures when the automatic transmission fluid is sufficiently cool.**
- **Always be sure to adjust the automatic transmission fluid amount when at the proper temperature for oil amount inspection.**

1) When using Subaru Select Monitor
(1) Connect the Subaru Select Monitor to data link connector.
(2) Turn the ignition to ON. (engine OFF)
(3) Turn off all parts effecting an electrical load such as air conditioner, audio and lights.
(4) Select {Work Support} on the «Transmission Diagnosis» screen of the Subaru Select Monitor. Select {ATF level adjustment mode} on the «Work Support» screen of the Subaru Select Monitor.

NOTE:
If the temperature is 42°C (107.6°F) or more, leave the vehicle in a cool location and restart procedures after the ATF temperature has decreased.
(5) Increase the oil temperature by idling the engine while checking the ATF temperature from the Subaru Select Monitor screen.

(6) Adjust the oil amount as soon as reaching the starting temperature for oil adjustment procedures (42°C (109.4°F)).

CAUTION:
Always be sure to adjust the ATF (overflow plug tightening) when at the proper temperature.

Lower than proper temperature	Proper temperature	Higher than proper temperature
Less than 43°C (109.4°F)	43°C — 47°C (109.4°F — 116.6°F)	48°C (118.4°F) or more

2) When shorting TC terminal circuit
(1) Short the data link connectors No. 13 and No. 4.

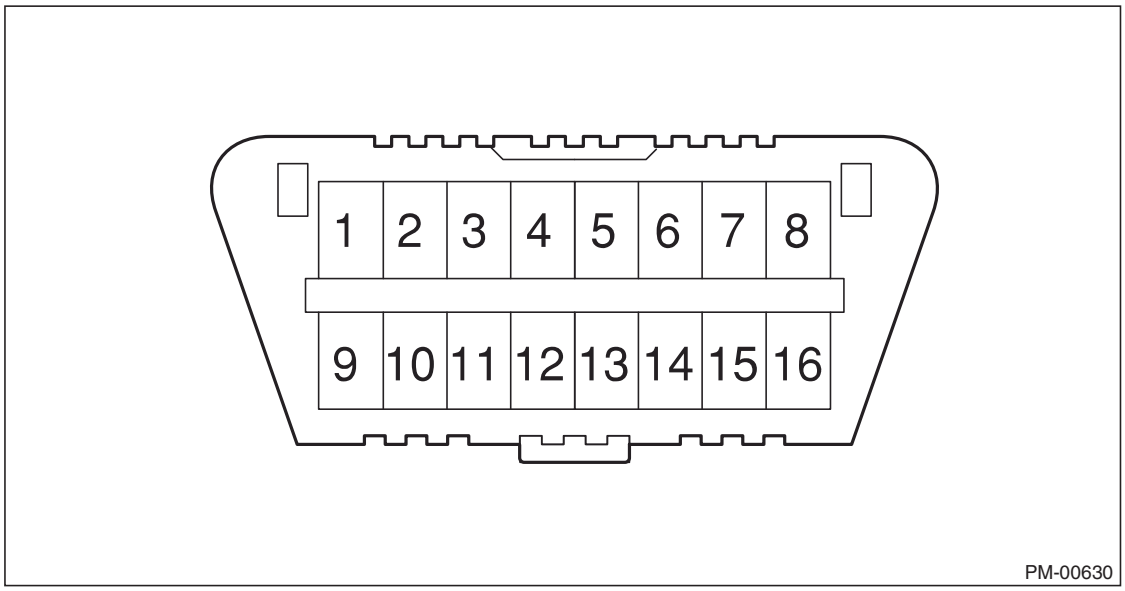

(2) Start the engine.
(3) Turn off all parts effecting an electrical load such as air conditioner, audio and lights.
(4) Operate the select lever in P → R → N → D → M → D → N → R → P to circulate ATF in the transmission.
(5) Operate between N ←→D within 1.5 sec. for a continuous 6 sec. or more to switch to the oil amount adjustment mode. When the vehicle enters into oil amount adjustment mode, the upshift/downshift permitted indicator lamps [▲]/[▼] in the combination meter light up simultaneously for 2 sec. and turn off with no relation to the range position.

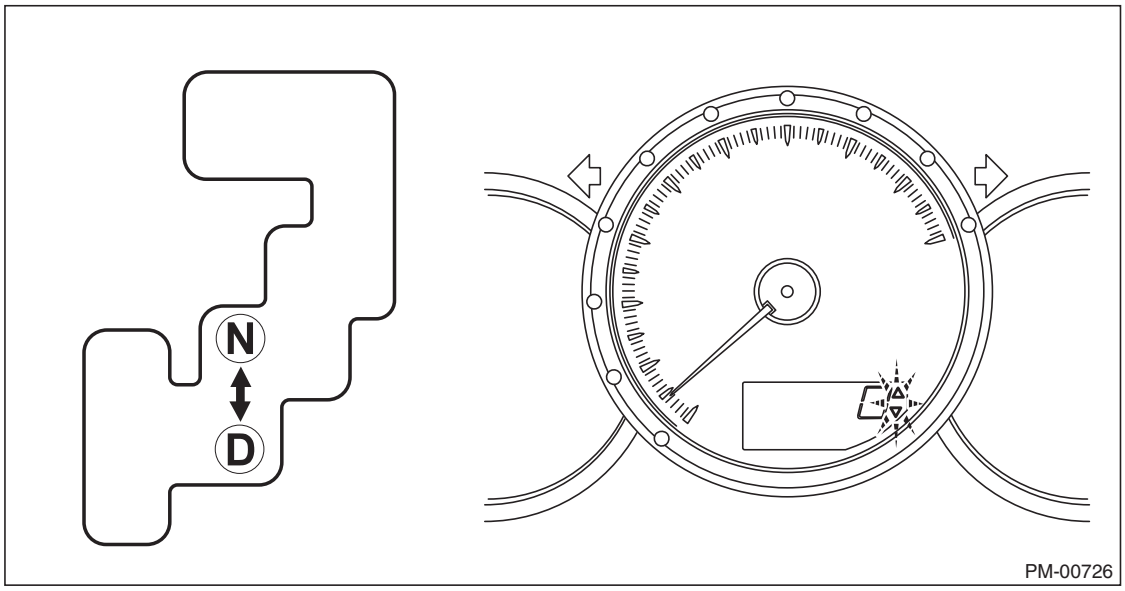

(6) After changing to oil pressure adjustment mode, switch to the “P” range.
(7) Remove the short of data link connectors No. 13 and No. 4.
(8) Check the status of the upshift/downshift permitted indicator lamps [▲]/[▼].

CAUTION:
If only the [▲] indicator lamp is illuminated or both [▲] and [▼] are illuminated simultaneously, stop performing procedures and leave the vehicle in a cool location. Start over and repeat procedures from Step (1) after the ATF temperature decreases to a point where only the downshift permitted indicator lamp [▼] when shifting to oil amount adjustment mode.

(9) Adjust the oil as soon as the proper temperature for oil amount adjustment is reached.

CAUTION:
Always be sure to adjust the ATF when at the proper temperature.

Lower than proper temperature	Proper temperature	Higher than proper temperature
Only the [▼] indicator lamp is illuminated	[▲] and [▼] indicator lamps are illuminated simultaneously	Only the [▲] indicator lamp is illuminated

3) Remove the overflow plug and check the oil amount when at the proper temperature for oil amount inspection.
- The oil amount is proper when fluid flows out of the overflow tube and then the flow of the fluid is thin.
- If fluid does not flow out of the overflow tube, fill through the refill hole until fluid flows out of the overflow tube. The oil amount is proper when the flow of the fluid is thin.

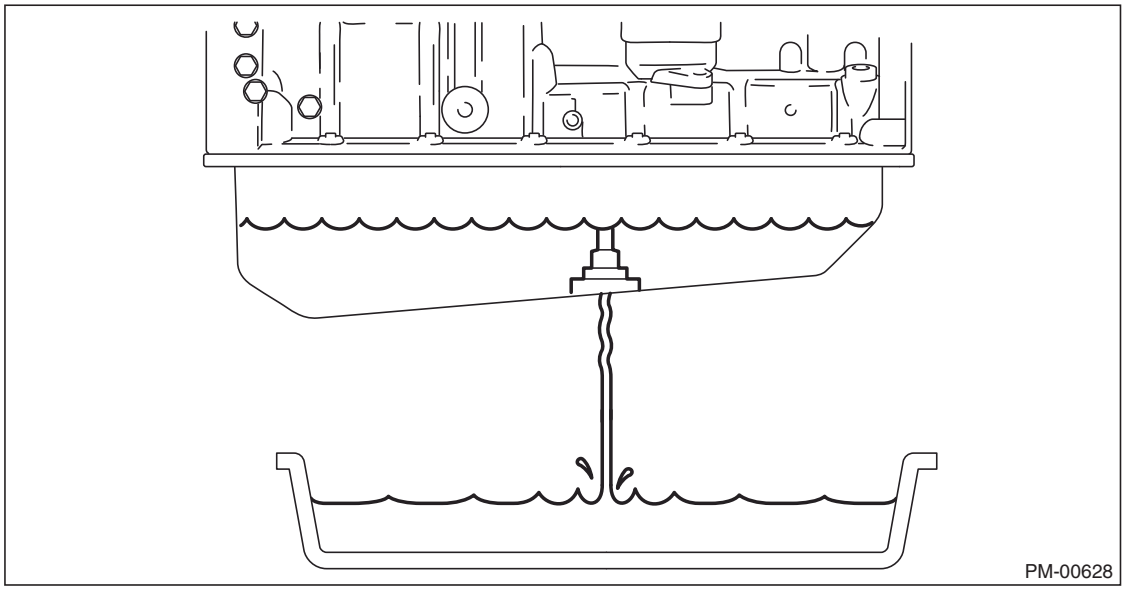

4) Install the overflow plug using a new gasket.

CAUTION:
Tighten the overflow plug with the ATF temperature at (43°C — 47°C (109.4°F — 116.6°F) (indicator lamps [▲] and [▼] are illuminated simultaneously).

Tightening torque:
20 N·m (2.1 kgf-m, 27.3 ft-lb)

5) Perform final tightening of the refill plug using a new O-ring.

Tightening torque:
39 N·m (4.0 kgf-m, 27.3 ft-lb)

6) Install engine under cover No. 2.

Tightening torque:
7.5 N·m (0.8 kgf-m, 5.5 ft-lb)

7) Install engine under cover No. 1.

Tightening torque:
M10: 7.5 N·m (0.8 kgf-m, 5.5 ft-lb)
M12: 30 N·m (3.1 kgf-m, 22.1 ft-lb)

8) Lower the vehicle.
9) Turn the ignition to OFF.

15. Differential Gear Oil

A: INSPECTION

1. REAR DIFFERENTIAL

Check for leakage of gear oil from the rear differential.

B: REPLACEMENT

1. REAR DIFFERENTIAL

CAUTION:
- **Gear oil is extremely hot just after driving. Be wary of receiving burns.**
- **Be careful not to spill the differential gear oil on exhaust pipe. If gear oil is spilled, wipe it off completely.**

1) Lift up the vehicle.
2) Remove the filler plug and gasket using a 10-mm (0.39 in) socket hexagon wrench.

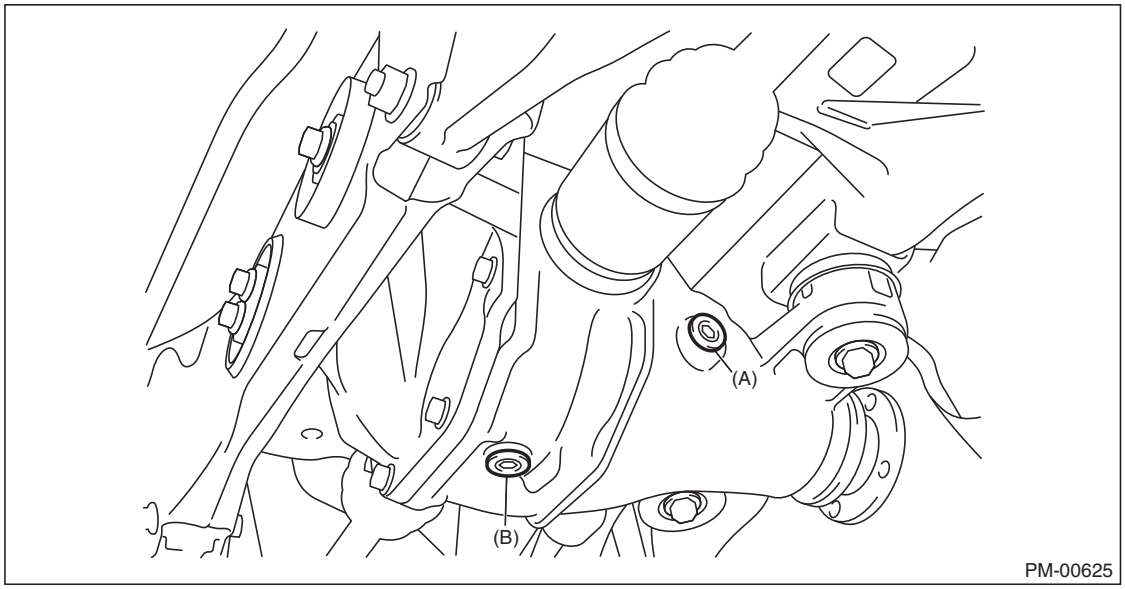

(A) Filler plug
(B) Drain plug

3) Remove the drain plug and gasket using a 10-mm (0.39 in) socket hexagon wrench.
4) Tighten the drain plug.

NOTE:
Use a new gasket.

Tightening torque:
49 N·m (5.0 kgf-m, 36.1 ft-lb)

5) Fill the differential carrier with gear oil to the bottom of filler plug.

NOTE:
Carefully refill gear oil while watching the level. Excessive or insufficient oil must be avoided.

Recommended gear oil:
Refer to "RM" section. <Ref. to RM-2, LUBRICANTS, RECOMMENDED MATERIALS, Recommended Materials.>

Oil capacity:
Refer to the "SPC" section. <Ref. to SPC-4, CAPACITY, BRZ.>

6) Install the filler plug.

NOTE:
Use a new gasket.

Tightening torque:
49 N·m (5.0 kgf-m, 36.1 ft-lb)

16. Brake Line

A: INSPECTION

1. BRAKE LINE

1) Check for scratches, swelling, corrosion, traces of fluid leakage on the brake hoses or pipe joints.
2) Make sure that brake pipes/hoses do not interfere with adjacent parts and there is no loose connector/clamp during driving.
3) Check any trace of fluid leakage, scratches, etc. on master cylinder, wheel cylinder and hydraulic unit.

NOTE:
- When the brake fluid level in the reservoir tank is lower than specified limit, the brake warning light on the combination meter will illuminate.
- Visually check the brake hose for damage. (Use a mirror where it is difficult to see.)

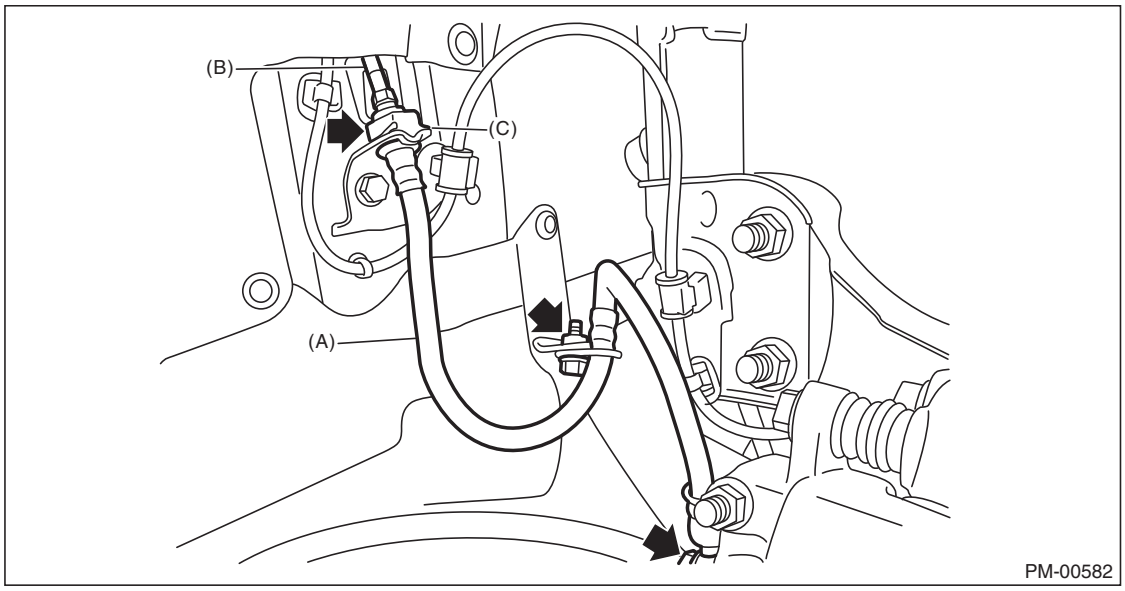

(A) Front brake hose
(B) Front brake pipe
(C) Clamp

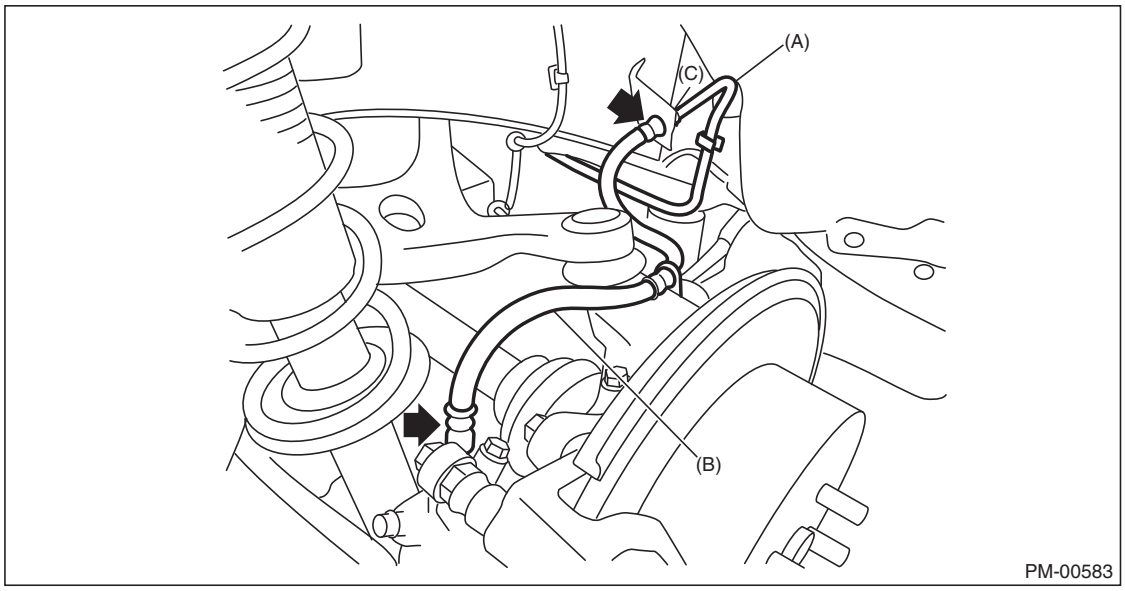

(A) Brake pipe
(B) Rear brake hose
(C) Clamp

2. SERVICE BRAKE

1) Move the brake pedal pads in a horizontal direction with a force of approx. 10 N (1 kgf, 2 lbf), and check that the pedal deflection is in the range of specifications.

CAUTION:
If excessive deflection is noted, replace with a new bushing.

Deflection of brake pedal:
Wear limit: 5.0 mm (0.197 in) or less

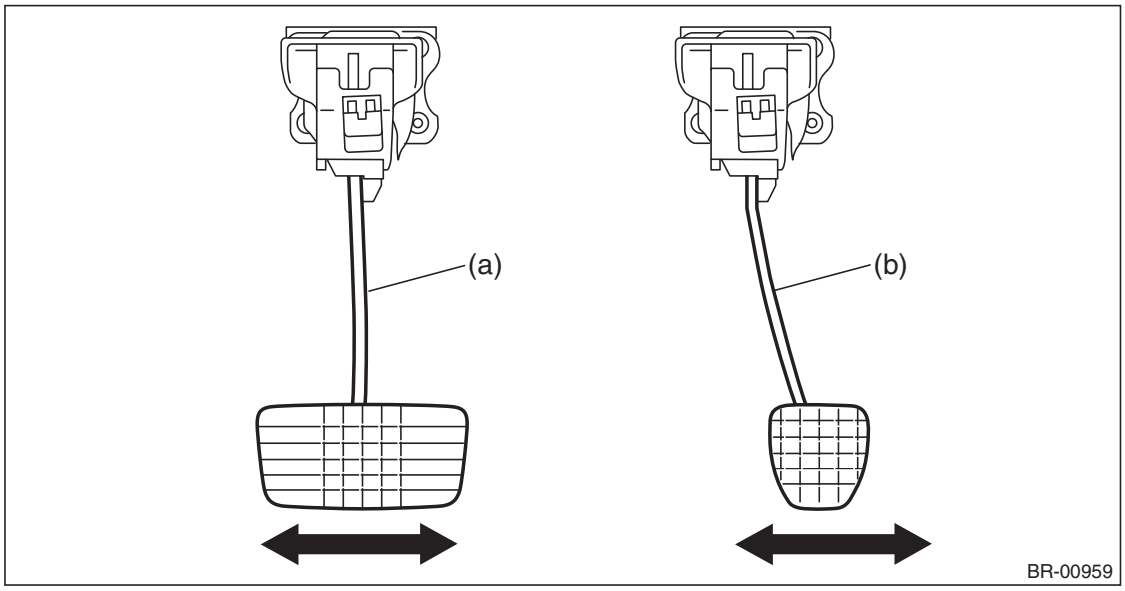

(a) Brake pedal (AT model)
(b) Brake pedal (MT model)

2) Check the position of the pedal pad.

Pedal height L:
AT: 150 mm (5.90 in)
MT: 145 mm (5.71 in)

Brake pedal free play A:
0.5 — 2 mm (0.020 — 0.079 in) [When pulling the brake pedal upward with a force of less than 10 N (1 kgf, 2 lbf).]

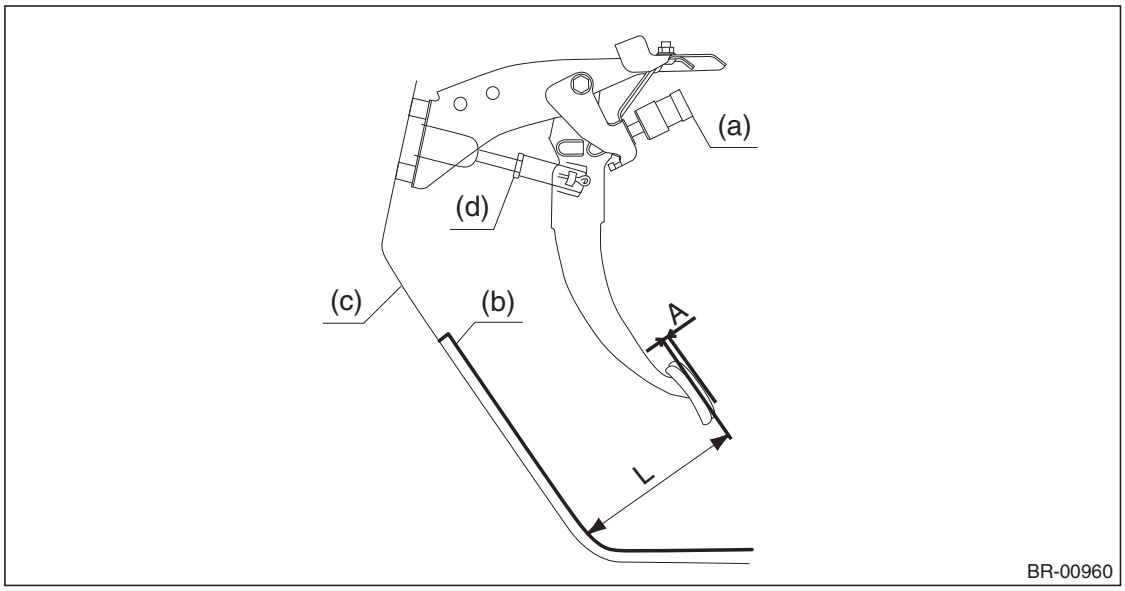

(a) Switch - stop light
(b) Mat
(c) Toe board
(d) Brake booster operating rod

3) If it is not within the specification, loosen the lock nuts of vacuum booster operating rod, and rotate the rod to adjust the pedal height L within the specification.
4) Tighten the operating lock nut.

Tightening torque:
22 N·m (2.24 kgf-m, 16.2 ft-lb)

NOTE:
Check the brake pedal height. When adjusting, also adjust the switch - stop light.

3. BRAKE SERVO SYSTEM

1) With the engine off, depress the brake pedal several times applying the same pedal force. Check that the travel distance should not change.
2) With the brake pedal depressed, start the engine. Check that the pedal moves slightly toward the floor.
3) With the brake pedal depressed, stop the engine and keep the pedal depressed for 30 seconds. Check that the pedal height does not change.
4) A check valve is built into the vacuum hose. Remove the vacuum hose to inspect function of check valve.

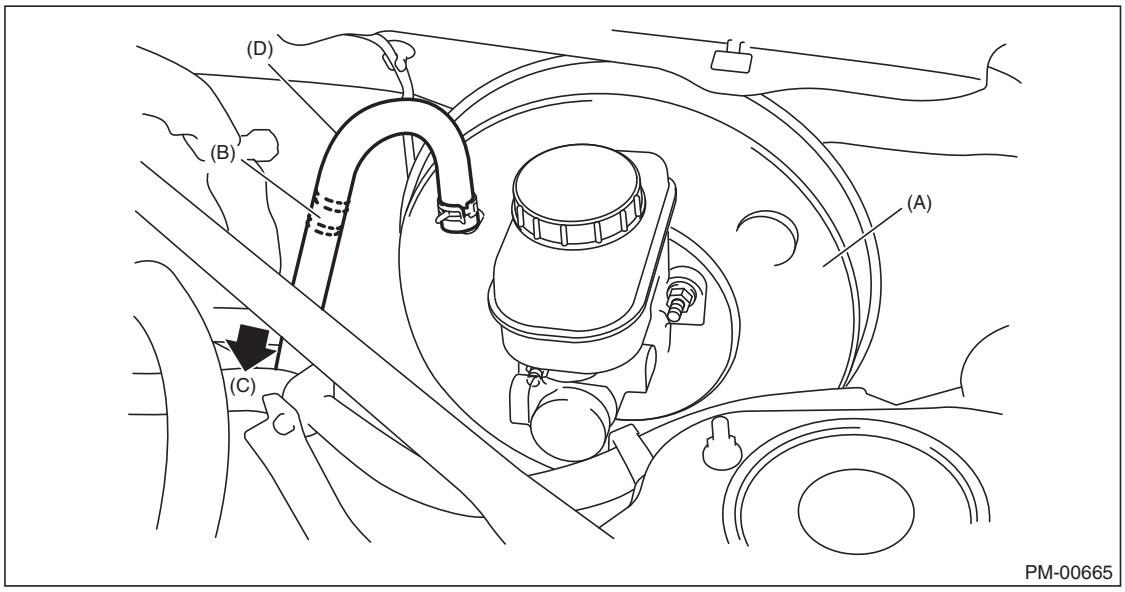

(A) Brake booster
(B) Check valve
(C) Engine side
(D) Vacuum hose

5) Check the vacuum hose for cracks or other damage.

CAUTION:
When installing the vacuum hose on the engine and brake booster, do not use soapy water or lubricating oil on their connections.
6) Check that the vacuum hose is securely tightened.

17. Brake Fluid

A: INSPECTION

1) Check that the amount of brake fluid is between the lines of “MIN” and “MAX” from a straight view or within 90° to the right and left forward.
If out of the specified range, refill with brake fluid or drain the fluid.
If the brake fluid level is close to “MIN”, check the brake pad for wear and refill with brake fluid.
2) Check the fluid for discoloration. If the fluid is extremely discolored, replace with the new fluid.

B: REPLACEMENT

CAUTION:
- **Do not let brake fluid come into contact with the painted surface of the vehicle body. Wash away with water immediately and wipe off if it is spilled by accident.**
- **Avoid mixing brake fluid of different brands to prevent fluid performance from degrading.**
- **Be careful not to allow dirt or dust to enter the reservoir tank.**

NOTE:
- During the operation, keep the reservoir tank filled with brake fluid to prevent entry of air.
- Operate the brake pedal slowly.
- For convenience and safety, perform the work with 2 people.

1) Lift up the vehicle and set rigid racks at the specified locations, or keep the vehicle lifted.
2) Remove both the front and rear wheels.
3) Drain brake fluid from the reservoir tank.
4) Refill the reservoir tank with recommended brake fluid.

Recommended brake fluid:
SUBARU genuine brake fluid

Perform the same procedure as for bleeding the brake line, until new brake fluid comes out from vinyl tube.

18. Disc Brake Pad and Disc

A: INSPECTION

1) Lift up the vehicle, and remove the wheels.
2) Visually check the pad thickness through inspection hole of disc brake assembly. Replace the pad if necessary.

CAUTION:
When replacing a pad, always replace the pads for both the left and right wheels at the same time. Also replace the pad clips if they are twisted or worn.

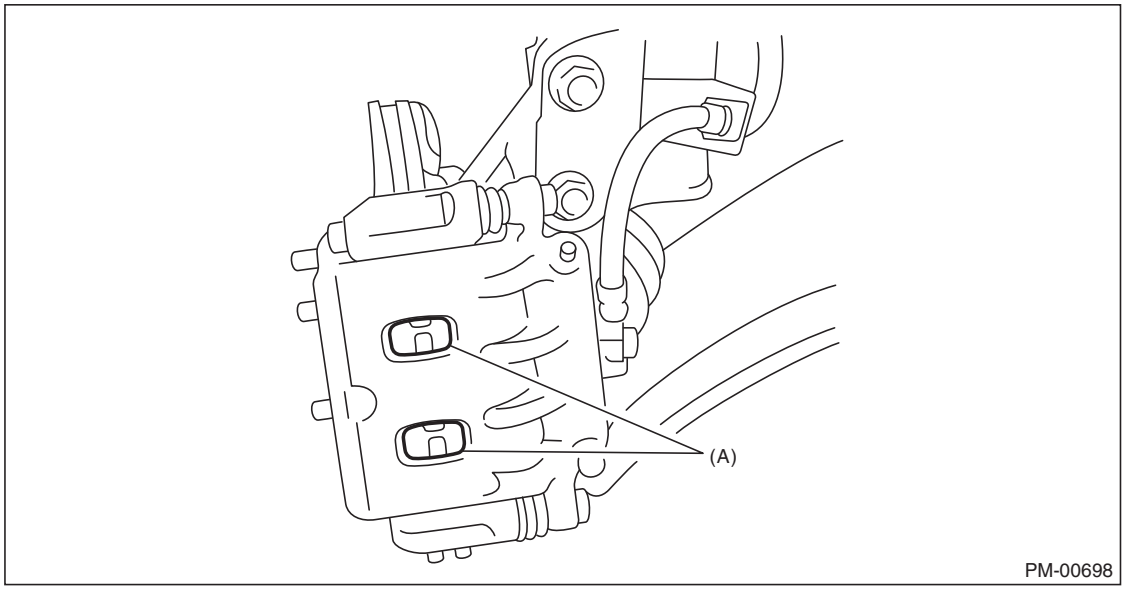

(A) Inspection hole

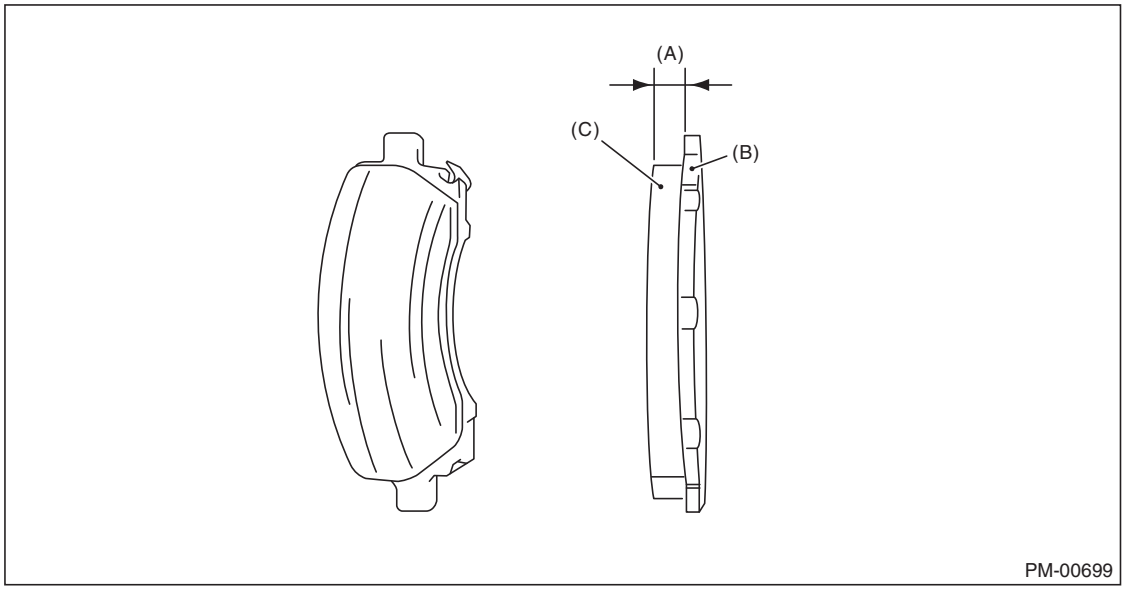

(A) Pad thickness
(B) Back metal
(C) Lining

- Front

Pad thickness	mm (in)
Standard	11 (0.43)
Wear limit	1.5 (0.059)

- Rear

Pad thickness		mm (in)
Standard	Ventilated	11 (0.43)
	Solid	9 (0.35)
Wear limit	Ventilated	1.5 (0.059)
	Solid	1.5 (0.059)

3) Check the disc rotor, and correct or replace if it is damaged or worn.
- Front

Disc rotor thickness	mm (in)
Standard	24 (0.94)
Wear limit	22 (0.87)

- Rear

Disc rotor thickness		mm (in)
Standard	Ventilated	18 (0.71)
	Solid	10 (0.39)
Wear limit	Ventilated	16 (0.63)
	Solid	8.5 (0.34)

4) Remove the caliper body.
5) Tighten the wheel nuts to secure disc rotor.
6) Set a dial gauge at a point of 10 mm (0.39 in) or less from outer periphery of the rotor, and then measure the disc rotor runout.

Disc rotor runout limit:
Front:
0.050 mm (0.0020 in)
Rear:
0.050 mm (0.0020 in)

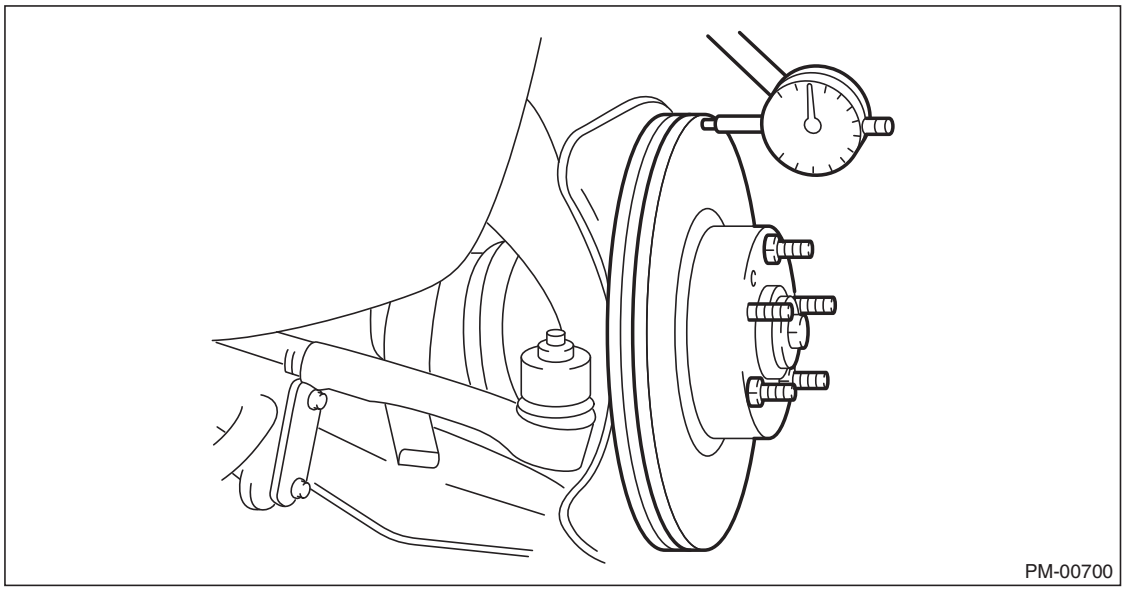

19. Parking Brake

A: INSPECTION

1) Measure the inner diameter of the rear disc rotor. If scoring or worn is found on the disc, replace the rear disc rotor.

Disc rotor inner diameter:
Specification: 190 mm (7.48 in)
Service limit: 191 mm (7.52 in)

2) Measure the lining thickness. If it exceeds the limit, replace the parking brake shoe.

Lining thickness:
Specification: 3.5 mm (0.14 in)
Service limit: 1.5 mm (0.059 in)

NOTE:
Replace the right and left parking brake shoe as a set.

B: ADJUSTMENT

1. SHOE CLEARANCE

1) Return the lever assembly - hand brake completely.
2) Loosen the adjusting nut, and make the cable free.
3) Remove the adjusting hole cover (A) from the rear disc rotor.
4) Turn the adjuster assembly - rear brake using a flat tip screwdriver until the parking brake shoe is in close contact with the rear disc rotor.

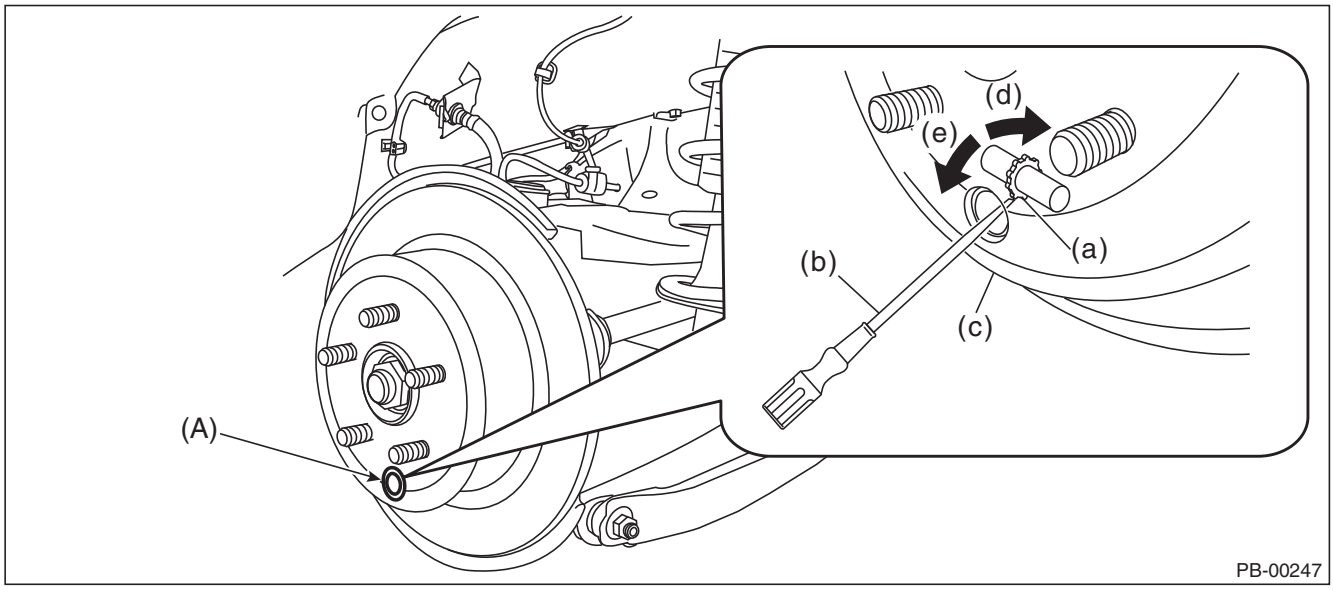

(a)	Adjuster ASSY - rear brake	(c)	Rear disc rotor	(e)	Shorten the adjuster ASSY - rear brake
(b)	Flat tip screwdriver	(d)	Extend the adjuster ASSY - rear brake		

5) Loosen the adjuster assembly - rear brake by 10 notches.

CAUTION:
- **Check there is no brake drag.**
- **Make sure that the adjuster assembly - rear brake is loosened by 10 notches. If it is not loosened sufficiently, dragging may occur.**

6) Install the adjusting hole cover to the rear disc rotor.
7) Adjust the parking lever stroke.

2. LEVER STROKE

1) Adjust the parking shoe clearance before adjusting lever stroke.
2) Release the claws, and then remove the boot - parking brake.

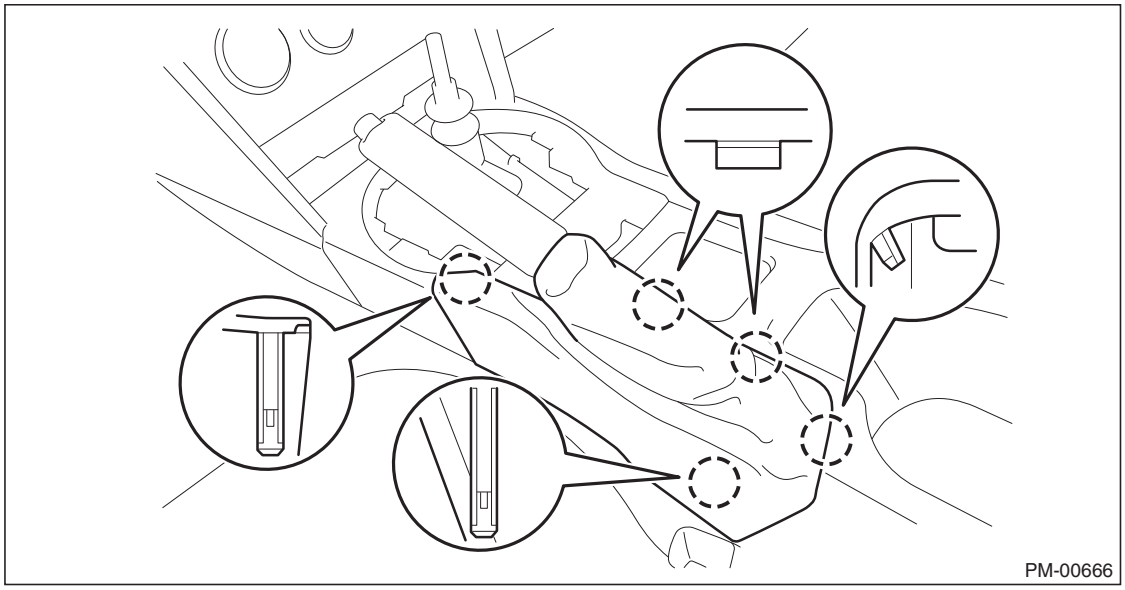

3) Pull the lever assembly - hand brake hard 3 to 5 times.
4) Turn the adjusting nut until the lever stroke is at the specified value.

Lever stroke:
7 to 8 notches when pulled with a force of 200 N (20.4 kgf, 45 lbf)

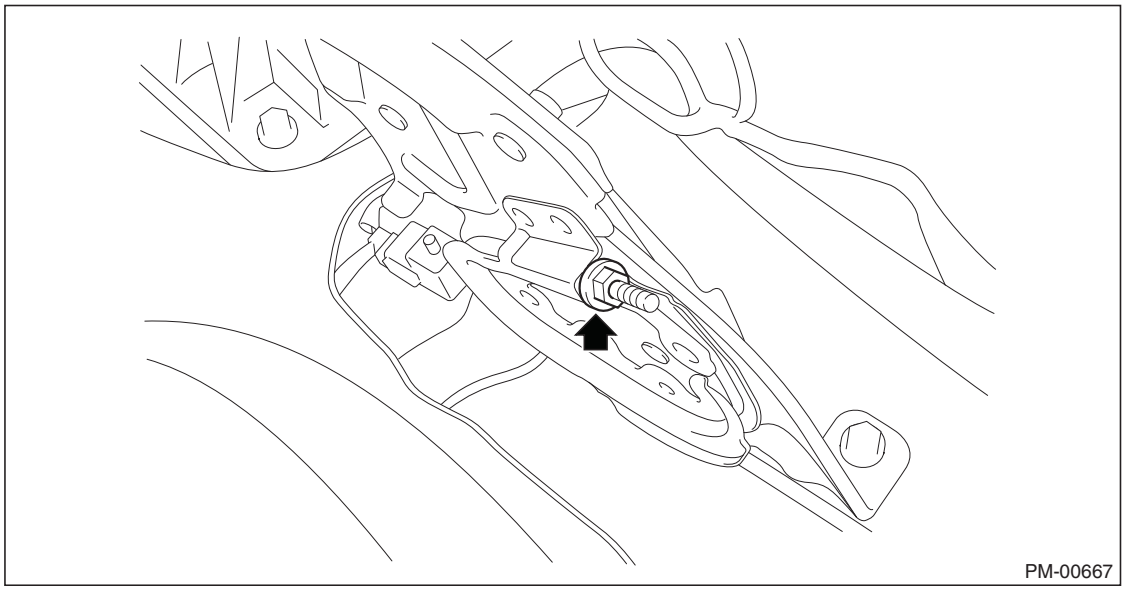

5) Check there is no brake drag.
6) Check that the brake warning light illuminates when the lever assembly - hand brake is operated.

NOTE:
The light must illuminate when the first notch is reached after pulling the lever.
7) Install the boot - parking brake.

20.Suspension

A: INSPECTION

1. FRONT SUSPENSION BALL JOINT

1) Lift up the vehicle until front wheels are off ground.
2) Grasp the bottom of tire and move it in and out in axial direction. If movement (B) is observed between the brake disc cover (A) and end of front arm (D), ball joint (C) may be excessively worn.

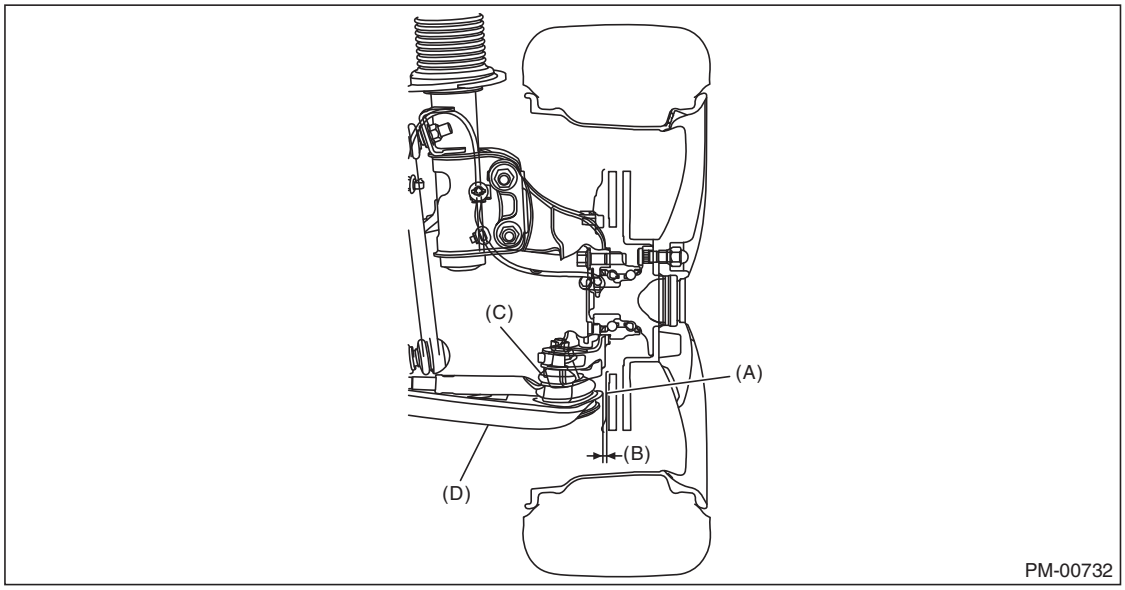

3) Next, grasp the end of front arm (C) and move it up and down. If movement (A) between the housing (D) and front arm (C) boss is observed, ball joint (B) may be excessively worn.

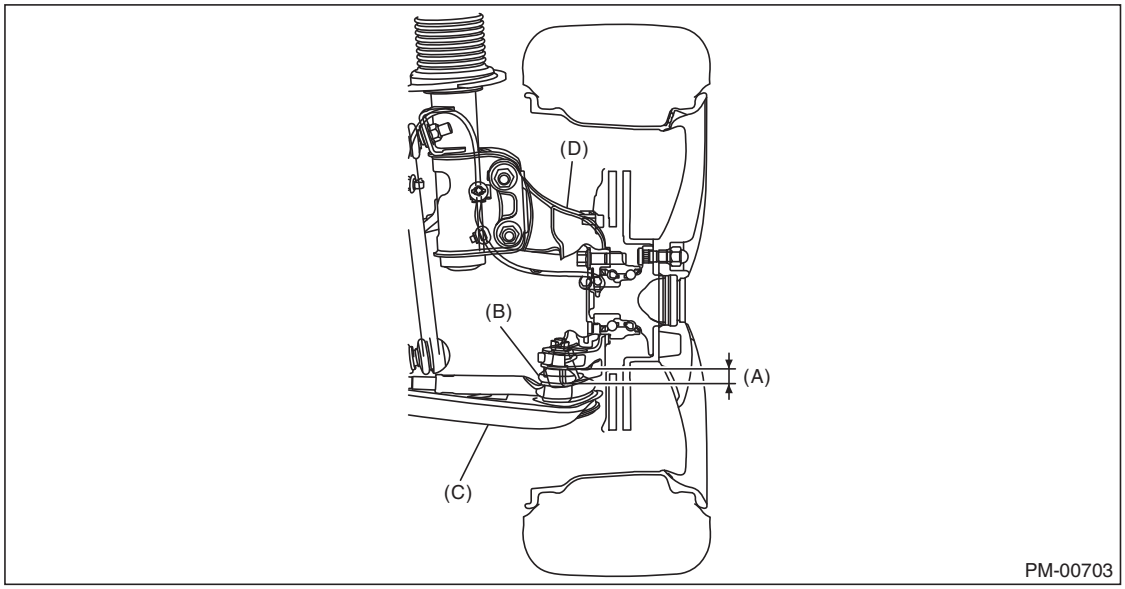

4) If the relative movement is observed in the preceding two steps, remove and inspect the front arm assembly. If the free play exceeds standard value, replace the front arm assembly.

5) Damage of dust boots
Visually inspect the ball joint dust boots. Replace if the front arm assembly is damaged.

NOTE:
When the front arm assembly is removed or replaced, check the toe-in of the front wheel. If it is not within the specified value, adjust the toe-in.

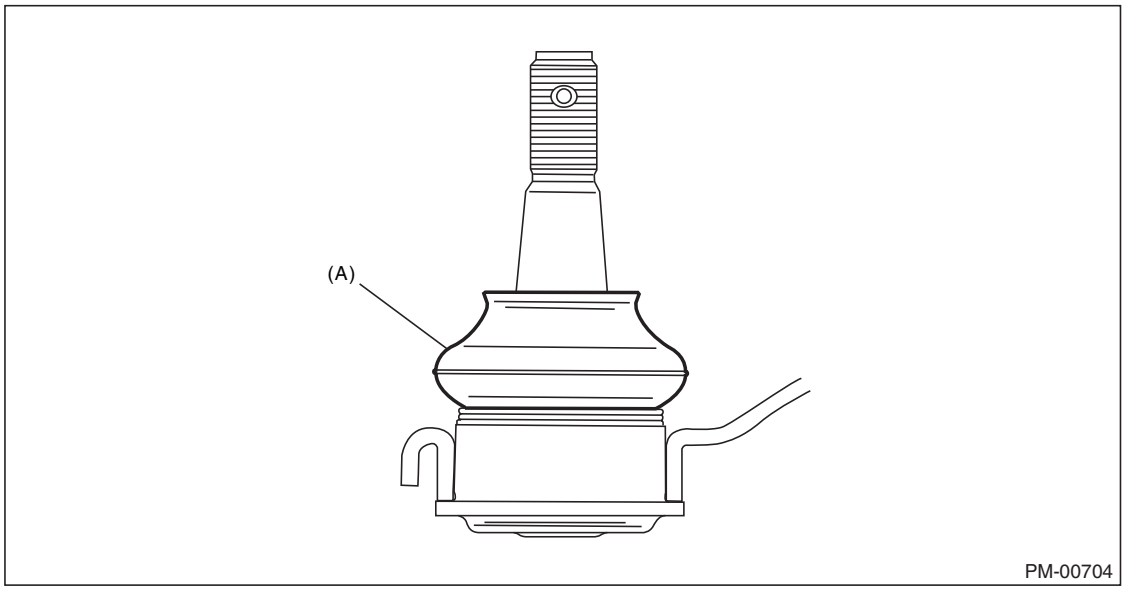

(A) Dust boots

2. REAR SUSPENSION BALL JOINT

1) Lift up the vehicle until rear wheels are off ground.
2) Grasp the bottom of tire and move it in and out in axial direction.
3) If movement is observed between the brake disc cover (A) and end of front lateral link (B), ball joint may be excessively worn.

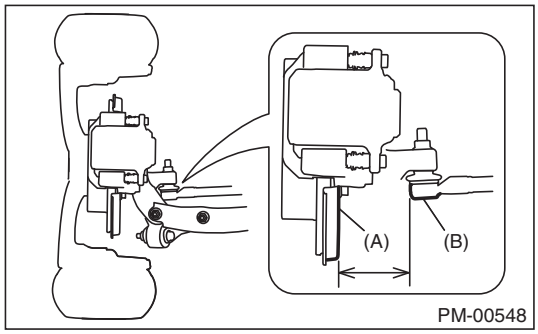

4) Grasp the end of front lateral link (B) and move it up and down. If movement is observed between the housing (C) and front lateral link (B) boss, ball joint may be excessively worn.

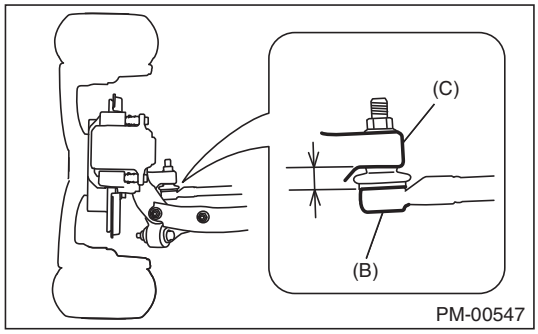

5) If the movement related to the previous two steps is observed, replace the front lateral link.

6) Damage of dust boots
Visually inspect the ball joint dust boots. Replace if front lateral link is damaged.
7) Check the upper arm ball joint and the pillow ball bushing of housing in the same manner.

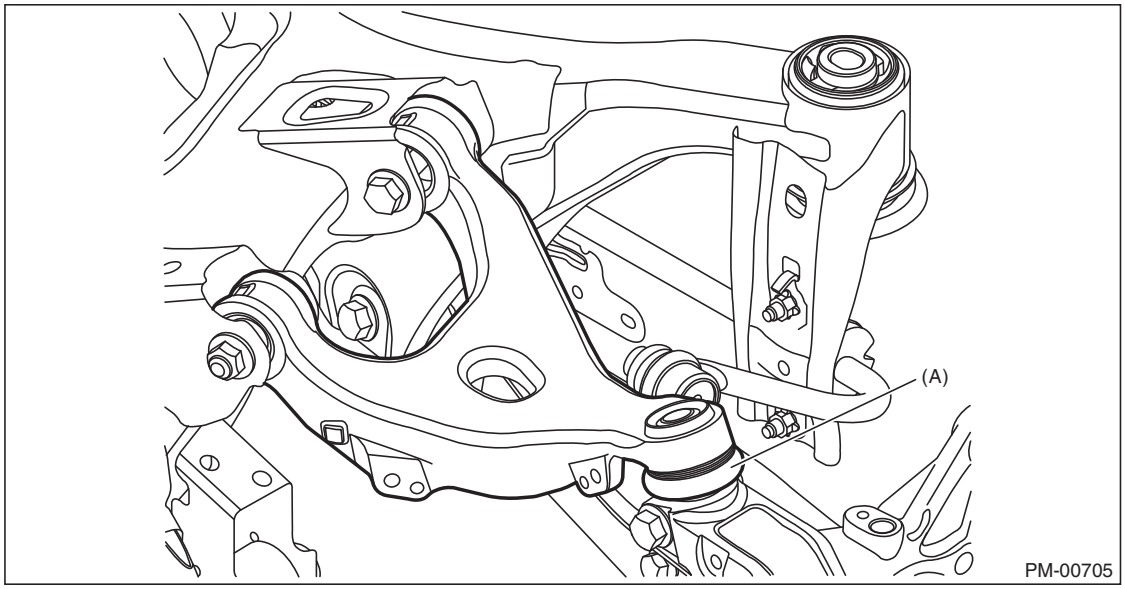

(A) Upper arm ball joint

3. FRONT, REAR SUSPENSION BUSHING

Apply pressure with a tire lever or similar tool, and inspect the bushing for excessive wear or damage. If defective, replace the bushing.

- Front suspension bushing

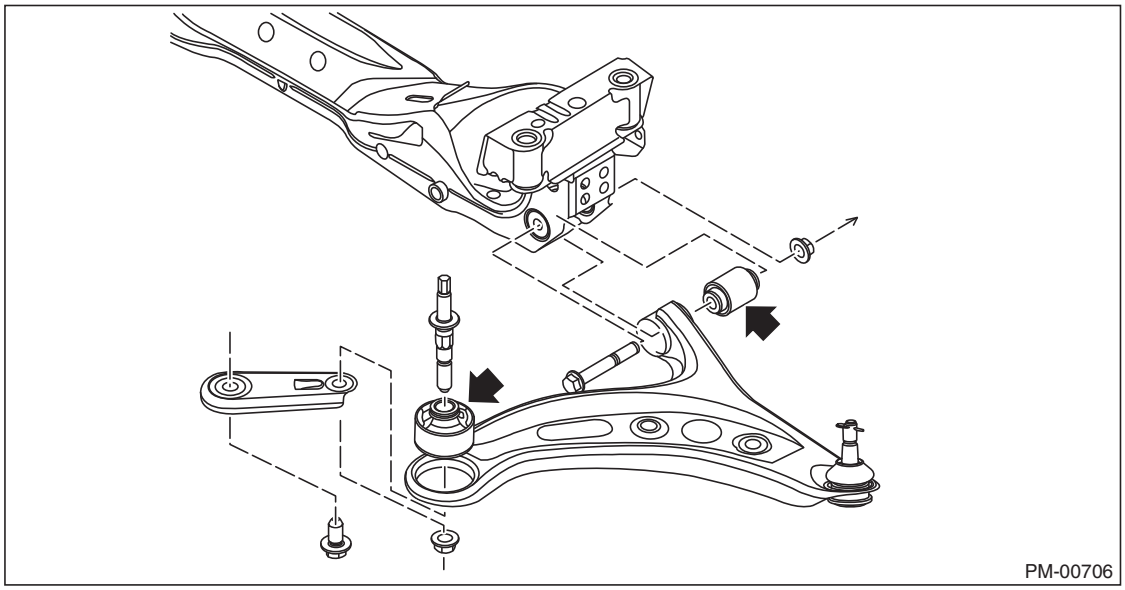

- Rear suspension bushing

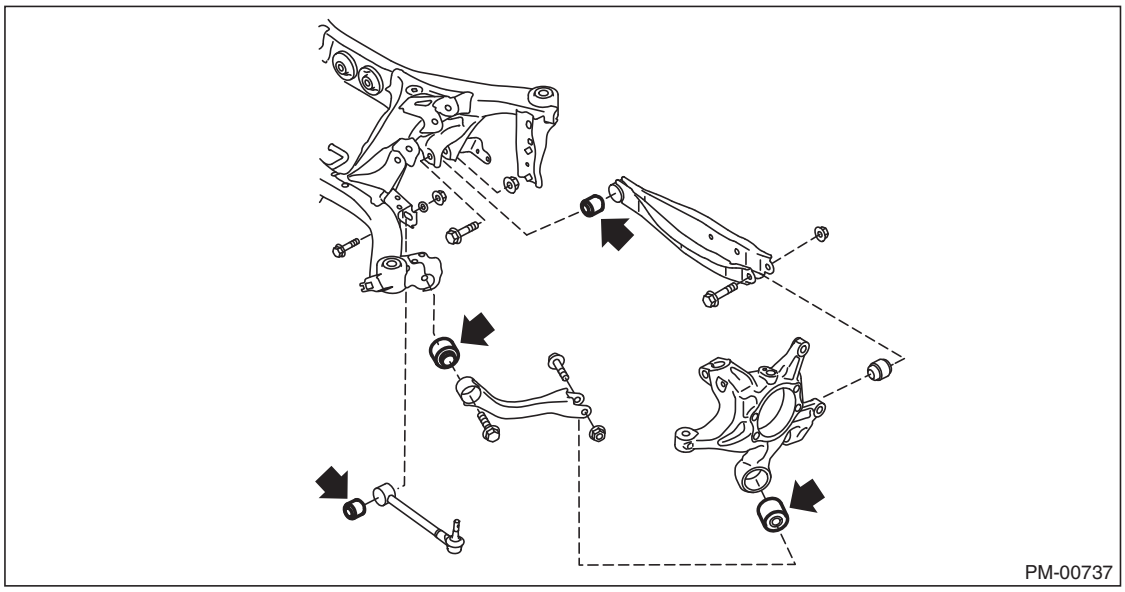

4. WHEEL ARCH HEIGHT

Check the wheel arch height.

5. WHEEL ALIGNMENT

Measure and adjust the front and rear wheel alignment at a time.

6. OIL LEAKAGE OF STRUT AND SHOCK ABSORBER

Visually inspect the front strut and rear shock absorber for oil leakage. Replace the front strut and rear shock absorber if oil leaks excessively.

7. TIGHTNESS OF BOLTS AND NUTS

Check the bolts and nuts for looseness. Retighten the bolts and nuts to specified torque. If the self-locking nuts and bolts are removed, replace them with new parts.

8. DAMAGE TO SUSPENSION PARTS

Check the following parts and the fastening portion of the vehicle body for deformation or excessive rusting which impairs the suspension. Thoroughly remove the deposits of the lower spring seat of strut where dust or mud are likely piled up. If necessary, replace the damaged parts with new parts. If minor rust formation, pitting, etc. are noted, remove the rust and take rust prevention measure.

- Front suspension
  - Front arm
  - Crossmember
  - Strut
- Rear suspension
  - Sub frame
  - Front lateral link
  - Rear lateral link
  - Upper arm
  - Trailing link
  - Shock absorber
- In the area where salt is sprayed to melt snow on a road in winter, check suspension parts for damage caused by rust every 12 months after lapse of 60 months. Take rust prevention measures as required.

21. Wheel Bearing

A: INSPECTION

1. FRONT WHEEL BEARING

NOTE:
Inspect the condition of front wheel bearing grease.
1) Jack-up the front side of vehicle.
2) While holding the front wheel by hand, swing it in and out to check bearing free play.
3) Loosen the wheel nuts, and remove the front wheel.
4) If the bearing free play exists in step 2) above, attach a dial gauge to the hub and measure axial play in axial direction.

Service limit:
Straight-ahead position within 0.05 mm (0.0020 in)
5) Remove the bolts and self-locking nuts, and extract the front arm from front crossmember.
6) Rotate the hub by hand and check for abnormal noise and binding.
If the hub is noisy or binds, replace the front axle.

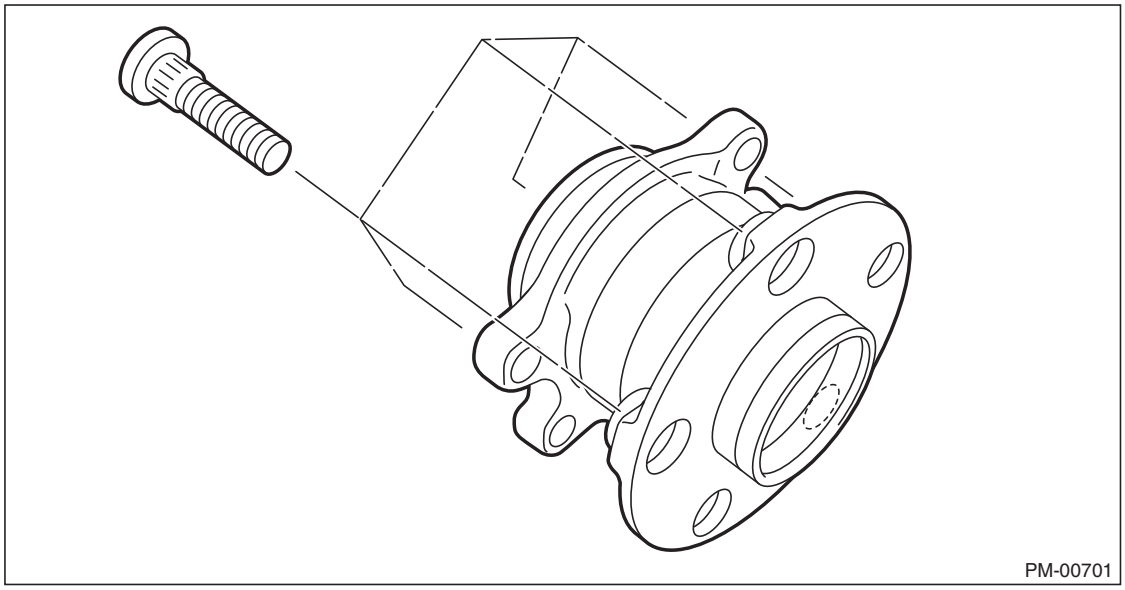

2. REAR WHEEL BEARING

1) Jack-up the rear side of vehicle.
2) While holding the rear wheel by hand, swing it in and out to check bearing free play.
3) Loosen the wheel nuts, and remove the rear wheel.
4) If the bearing free play exists in step 2) above, attach a dial gauge to the hub and measure axial play in axial direction.

Service limit:
Straight-ahead position within 0.05 mm (0.0020 in)
5) Remove the DOJ of rear drive shaft from rear differential.

6) While supporting rear drive shaft horizontally with one hand, turn the hub with the other hand to check for noise or binding.
If the hub is noisy or binds, replace the rear axle.

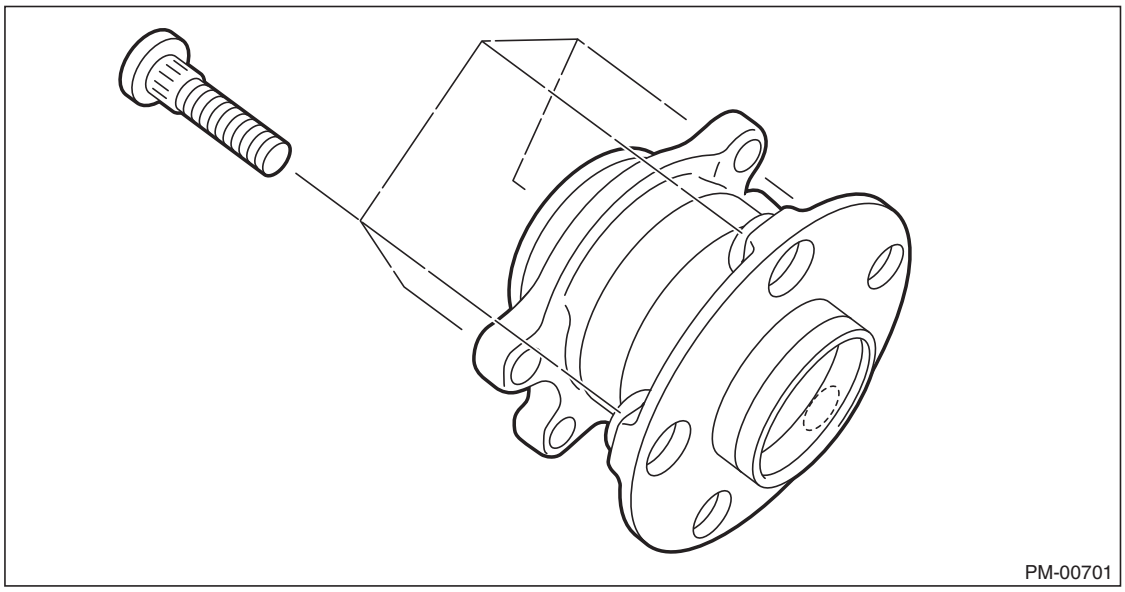

22. Axle Boots & Joints

A: INSPECTION

1. REAR AXLE BOOTS

Inspect the rear axle boots (A) for deformation, damage or failure. If faulty, replace with new part.

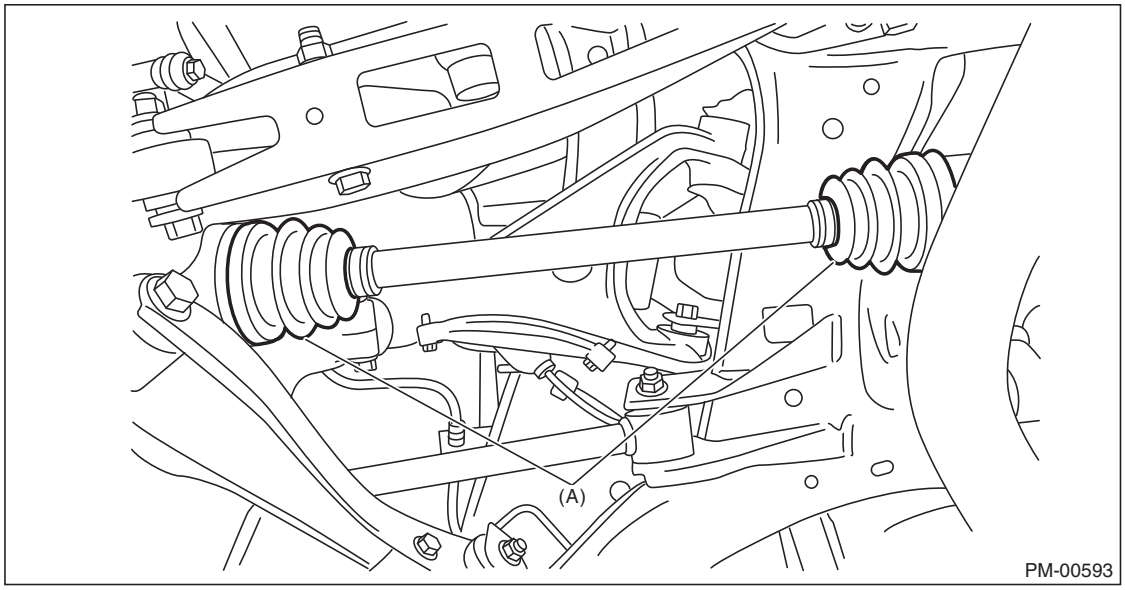

2. PROPELLER SHAFT

Inspect the propeller shaft for damage or failure. If faulty, replace with new part.

23. Tire Check and Rotation

A: INSPECTION

1) When the tread has worn to less than 1.6 mm (0.063 in) or the tread wear indicator appears across the tread, replace the tire. (Replace the right and left tire as a set.)

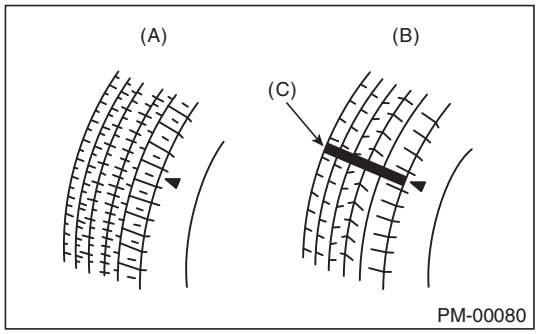

(A) New tread
(B) Damaged tread
(C) Tread wear indicator

2) If the tire appears to be worn unevenly, adjust the wheel alignment.
3) Next, make a tire rotation between front and rear as shown in the figure, make sure tires are worn evenly.

- When the direction of tire rotation is not specified

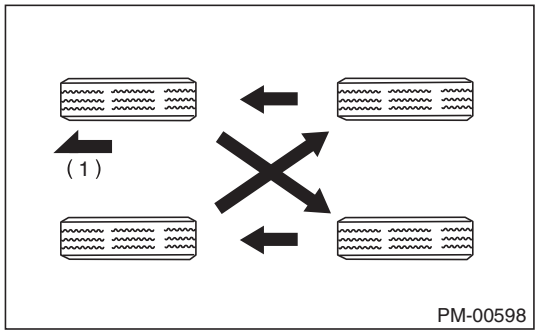

(1) Front

- When the direction of tire rotation is specified

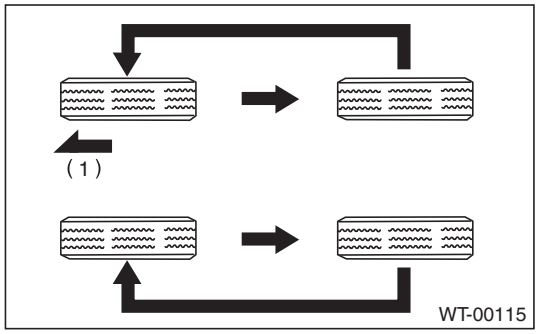

(1) Front

24.Steering System (Power Steering)

A: INSPECTION

1. STEERING WHEEL

1) Set the steering wheel in a straight-ahead position, and check the wheel spokes to make sure they are correctly set in their specified positions.
2) Lightly turn the steering wheel to the left and right to determine the point where front wheels start to move. Measure the distance of the movement of steering wheel (periphery).

Steering wheel free play:
0 — 30 mm (0 — 1.8 in)

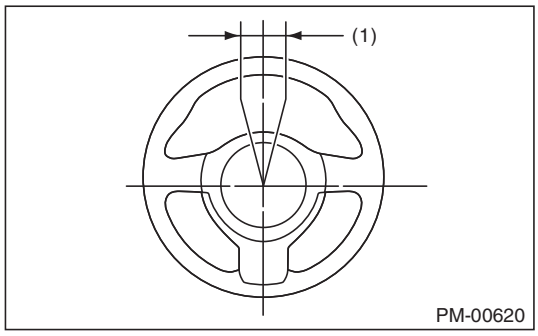

(1) Steering wheel free play:

Move the steering wheel vertically toward the shaft to check if there is play in the direction.

Play limit:
0.5 mm (0.020 in)

3) Drive the vehicle and check the following items.
   (1) Steering force:
   The effort required for steering should be smooth and even at all points, and should not vary.
   (2) Pulled to one side:
   Steering wheel should not be pulled to one side while driving on a level surface.
   (3) Wheel runout:
   Steering wheel should not show any sign of runout.
   (4) Return status:
   Steering wheel should return to its original position after it has been turned and then released.

2. STEERING SHAFT JOINT

If steering wheel play is excessive, disconnect the universal joint of steering shaft and then check the play where the joints cross and yawing torque. Also, check the seal for damage or serrations for wear. If the joint is loose, retighten the mounting bolts to the specified torque.

Tightening torque:
35 N·m (3.6 kgf-m, 25.8 ft-lb)

3. GEARBOX

1) Set the steering wheel in the straight position, then rotate it 90° in both the left and right directions. While steering wheel is being rotated, check the looseness of the gearbox.

Tightening torque:
60 N·m (6.1 kgf-m, 44.3 ft-lb)

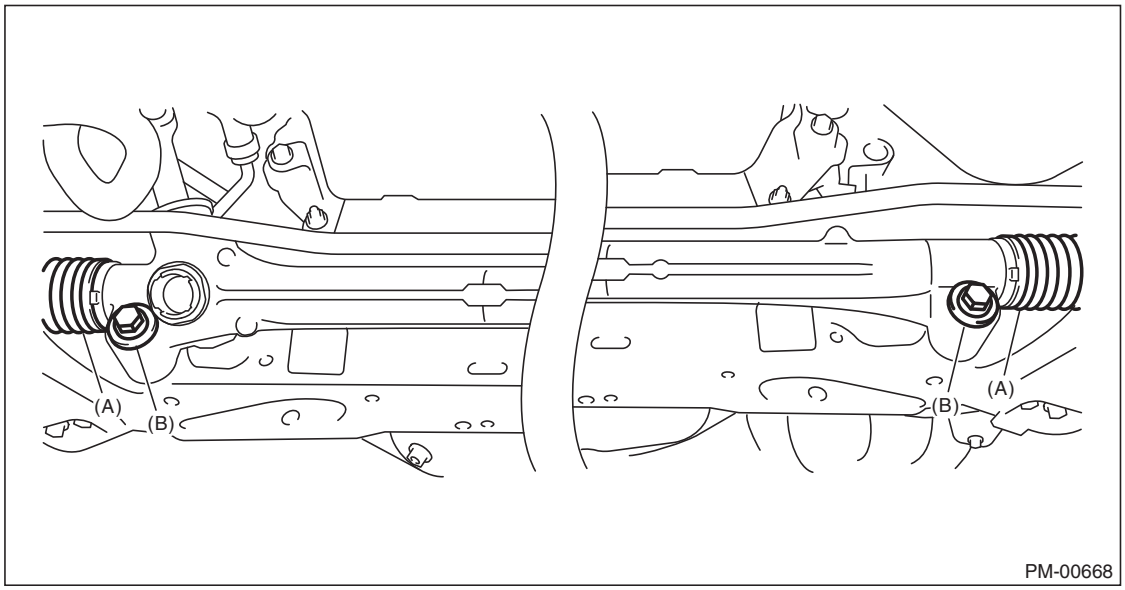

(A) Boot
(B) Gearbox mounting bolt

2) Check the boot for damage, cracks or deterioration.
3) With the vehicle stopped on a level surface, quickly turn the steering wheel to the left and right. While steering wheel is being rotated, check the gear backlash. If any noise is noticed, adjust the gear backlash.

4. TIE-ROD

1) Check the tie-rod and tie-rod end for deformation, cracks and other damage.

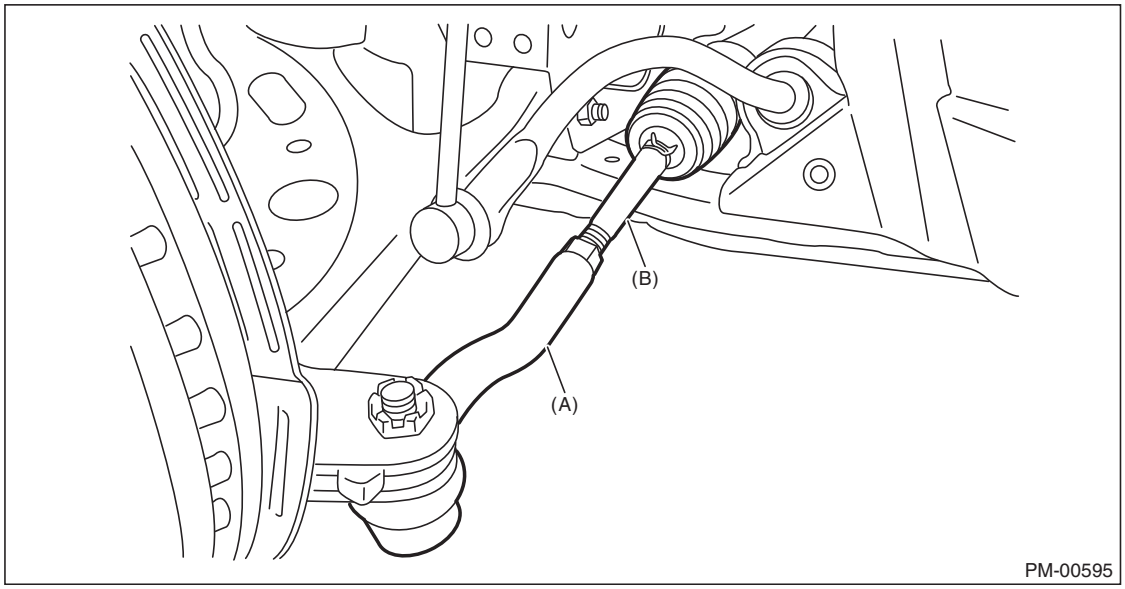

(A) Tie-rod end
(B) Tie-rod

2) Confirm that the connections of knuckle ball joints for play, and then check for damage on dust boots and free play of ball studs. If castle nut is loose, retighten it to the specified torque, then tighten further up to a maximum of 60° until the cotter pin hole is aligned.

Tightening torque:
27 N·m (2.75 kgf-m, 19.9 ft-lb)

3) Check the tightening of tie-rod end lock nut. If it is loose, tighten it to the specified torque.

Tightening torque:
85 N·m (8.7 kgf-m, 62.7 ft-lb)

5. GEARBOX BOOTS

Inspect both sides of the gearbox boot as follows, and correct the defects if necessary.
1) The (A) and (B) positions of the gearbox boot are fitted in (A) and (C) grooves of gearbox and the rod.
2) Clips are fitted outside of positions (A) and (B) of boot.
3) Make sure that there is no cracks or holes in the boot.

NOTE:
Rotate (B) position of gearbox boot against the torsion produced by the adjustment of toe-in etc. Apply grease to the groove (C).

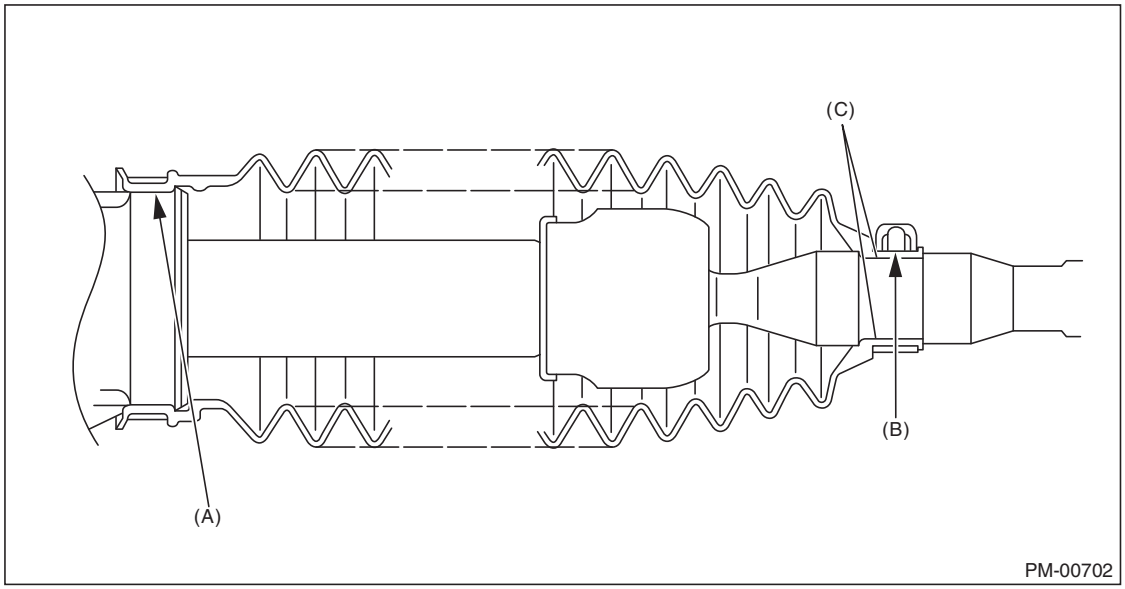

6. MOUNTING BOLT & NUT

Inspect the fitting bolts and nuts for looseness, and retighten if necessary.

7. CHECK HARNESS

Check the harness of the electric power steering for cracks or damages.
Replace the electric steering column with a new part if necessary.

8. CHECK POWER STEERING CONTROL MODULE

Check for the electric power steering diagnostic trouble codes. If the diagnostic trouble code is detected, perform the diagnosis.
Replace the control module and steering column with new parts if necessary.

25. A/C Filter

A: REPLACEMENT

1) Open the glove box and remove the damper stay pin.

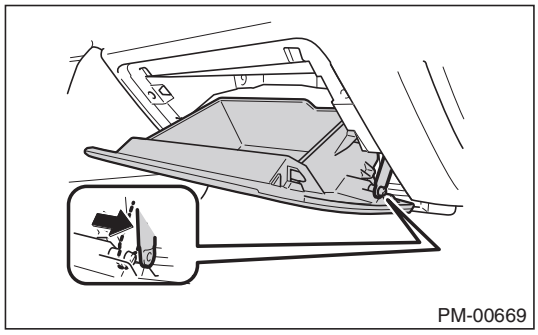

2) Press the glove box sidewall inwards and remove the upper grommet.

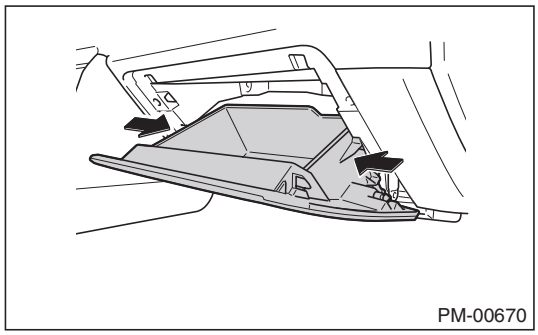

3) Remove the tab of the lower part of the glove box.

CAUTION:

- **Always be sure to pull out the glove box horizontally. Pulling the glove box out upwardly can deform the hinges, resulting in looseness.**

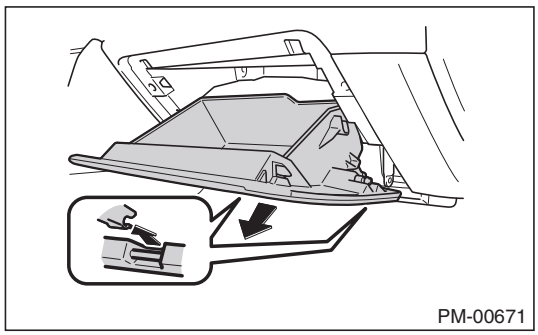

4) Remove the filter cover.

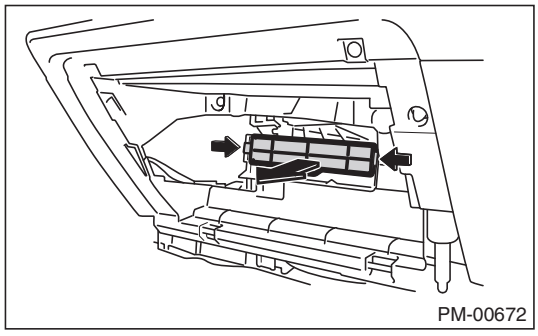

5) Remove the filter and install a new filter.

NOTE:
Install with “UP” mark facing upwards.

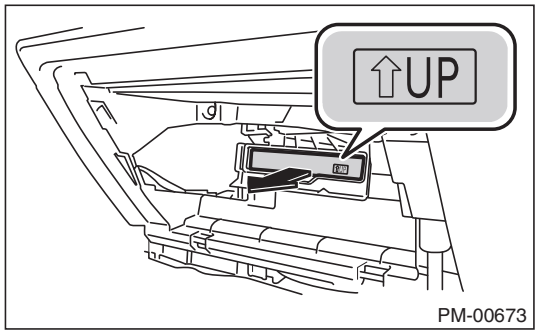

6) Install in the reverse order of removal.