Table of Contents

E70 Climate Control Systems (IHKA, IHKA w/FKA, Third Row HV)

Subject Page

Introduction 5

System Functions 6
- Temperature Control 6
  - IHKA (2-zone) 6
  - IHKA with FKA Rear Automatic Air Conditioning System (4-zone) . 9
  - Adjustment and Operation of Rear Air-conditioning 9
- Air Flow Control/Blower Speed Control 11
  - The Mode Switches to Manual 11
  - Blower Control Manual Setting 11
- Air Distribution/Air Flap Control 11
  - Air Distribution/Air Flap Control/Automatic Mode 11
  - Manual Air Distribution/Air Flap Control Settings 12
  - Operation and Adjustment/Air Distribution 12
- Air Stratification (Ventilation Temperature) 13
- Automatic Programs (Gentle, Medium, Intensive) 13
  - Operation and adjustment of the air conditioning system, automatic programs 14
- Defrost Function 15
- Cold Start Interlock 15
  - Preventing Window Misting (Window Misting Sensor) 15
- Heated Rear Window HHS 16
- Residual Heat Function 16
- Fresh Air Circulation Mode/Automatic Air Recirculation Mode AUC . . 16
  - Fresh Air, Automatic Air Recirculation, Air Recirculation 17
- Rain/Driving Light Solar Sensor 17
- Compressor Control/Evaporator Control 17
- A/C MAX 17
- Parked Car Ventilation 18
- OFF Mode 18
- Seat Heating/Seat Ventilation 18
  - Front SiH Seat Heating 18
  - Rear SiH Seat Heating without FKA 19
  - Rear SiH Seat Heating with FKA 19
  - SiL Seat Ventilation 19
- Heating and Ventilation of Third Row of Seats (Optional Seat Concept 5+2) 21

cardiagn.com

Subject Page

System Components 24
Fresh Air/Recirculating Air Filter 24
Fresh Air Filtering 24
Recirculated Air Filtering 25
Evaporator 25
Heater Core 25
Blower Unit 27
Air Flap Control Actuator 29
IHKA Controls, Control Unit 33
Temperature, Air Flow and Air Distribution Control 34
IHKA Sensors 34
NTC Evaporator Temperature Sensor 34
Heater Core Temperature Sensor(s) 34
Front Interior Temperature Sensor 34
Front Center Ventilation Temperature Sensor(s) 35
Ambient and Engine Temperatures 36
Rain/Driving Light Solar Sensor 36
Mist Sensor via FZD 37
Pressure Sensor via Junction Box 38
AUC Sensor 39
Refrigerant Circuit 40
A/C Compressor Control 41
Heater Water Valves 42
Coolant Pump 42
Residual Heat Function 42
Heated Rear Window (HHA) 43
Front Air Stratification 43
Rear Air Stratification 43

Rear Automatic Air Conditioning System (FKA) 44
FKA Control Unit 44
FKA Sensors 45
Rear Interior Temperature Sensor (FKA) 45
Rear Center Ventilation Temperature Sensors (FKA) 45
Rear Footwell Temperature Sensors (FKA) 45
Rear Interior Temperature Control (FKA) 45
Rear Footwell PTC Heating Elements Left/Right 48
Heating/Ventilation for Third Row of Seats 48

Bus Network Components 52
Steering Wheel Heating 52
Center Console Switch Cluster (SZM) 52
Electric Steering Column Adjustment (eLSV) 52

cardiagn.com

Subject Page

System Circuit Diagram- lHKA, 2-zone 53
System Circuit Diagram- lHKA FKA, 4-zone 54

Service Information 57
Diagnostics/Programming 57
PIA 57
Transport and Workshop Mode 57

cardiagn.com

Climate Control Systems

Model: E70

Production: From Start of Production

OBJECTIVES

After completion of this module you will be able to:

- Describe the different functions of the E70 IHKA, FKA and Third Row Heating and Ventilation Systems.
- Identify the components related to the individual IHKA configurations.
- Diagnose and troubleshoot specific problems in the IHKA systems.

cardiagn.com

Introduction

The heating/air-conditioning system of the E70 is designed as water temperature controlled system.

The performance of the system has increased with regard to cooling power, heating power and comfort compared to the E53 system. Independently of other technology-related and market-specific configurations, three equipment variants of the heating/air-conditioning system are available in the E70:

- IHKA, integrated automatic heating / air conditioning system (2-zone)
- IHKA with FKA rear automatic air conditioning system (4-zone)
- Optional 3rd row heating and ventilation system on the 5+2 seat package

FKA is the rear automatic air conditioning system and has its own operating and control unit in the rear. This control unit is used to operate individual heating/air conditioning adjusting facilities for the rear passengers.

IHKA allows the temperature and the air flaps at the left and right sides of the vehicle to be controlled separately for the driver and the front passenger. The vehicle interior is controlled in two zones (2-zone) in accordance with these individual settings.

The optionally available FKA gives the rear passengers the opportunity to make separate temperature settings for the left and right sides of the vehicle and control the blower in the rear. The vehicle interior is controlled in four zones (4- zone) in accordance with these four individual settings.

Separate heating and ventilation for the third row of seats is also optionally available for the optional 5+2 seat package. Heating is realize with the use of an electrical heater and ventilation through the use of a blower fan located inside the 3rd row heating and ventilation unit.

Note: E70 vehicles with the N52 engine are fitted with A/C compressors with a magnetic clutches. Vehicles with the N62 engine will initially be equipped with a clutchless A/C compressors.

cardiagn.com

System Functions

Depending on the equipment fitted, the E70 has up to six operating locations for adjusting the different parameters (temperature, air flow, air distribution) for controlling the climate of the vehicle interior. Depending on the equipment fitted, the operating locations are:

- the IHKA control unit
- the controller
- the knurled adjusting wheels at the outlets
- the stratification adjusters at the outlets
- the FKA control unit
- and the button with the knurled adjusting wheel for ventilation and heating for the 3rd row of seats.

With the FKA the facilities in the rear can also be operated using the controller and displayed in the relevant menu on the Central Information Display CID.

Temperature Control

The air-mass flow (fresh air or recirculated air) is first routed via the evaporator in the heating/ air-conditioning housing, provided that the A/C compressor has been activated, cooled and then heated to the required temperature via the heating system heat exchanger.

When the air is cooled in the evaporator it is also dried at the same time. The condensate is led away via the condensation drains of the heater/air-conditioner.

Fresh air or recirculated air can be routed directly to the air ducts via the evaporator and appropriate bypass, without being routed through the heating system heat exchanger.

IHKA (2-zone)

Due to its two-part heating system heat exchanger, the IHKA allows separate 2- zone right/left temperature control. The heating system heat exchanger has two temperature sensors. The temperature is controlled via two water valves (left/right). This variant has four additional actuator motors for air flap control and air distribution and therefore ten actuator motors in total.

cardiagn.com

IHKA 2-zone

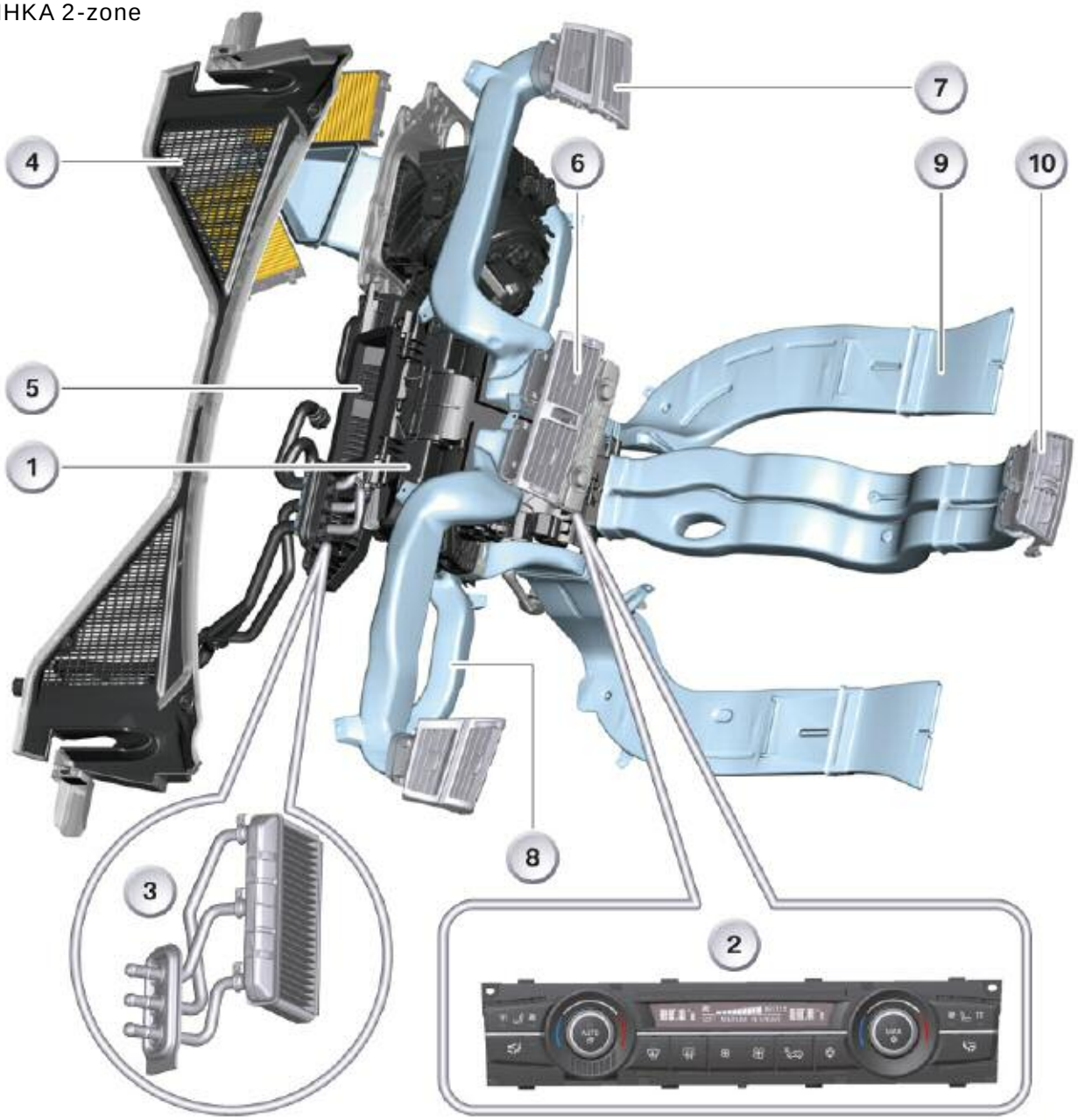

Index	Explanation	Index	Explanation
1	IHKA, 2-zone	6	Ventilation air outlet, front center, left/right
2	IHKA HIGH operating unit, temperature setting for two zones	7	Ventilation air outlet, front left/right
3	Two inlet pipes to HWT, two water valves	8	Footwell air outlet, front left/right
4	Fresh air intake	9	Footwell air ducts, rear left/right
5	defrost air outlet	10	Ventilation air outlet, rear left/right

cardiagn.com

IHKA 4-zone with FKA rear automatic A/C System

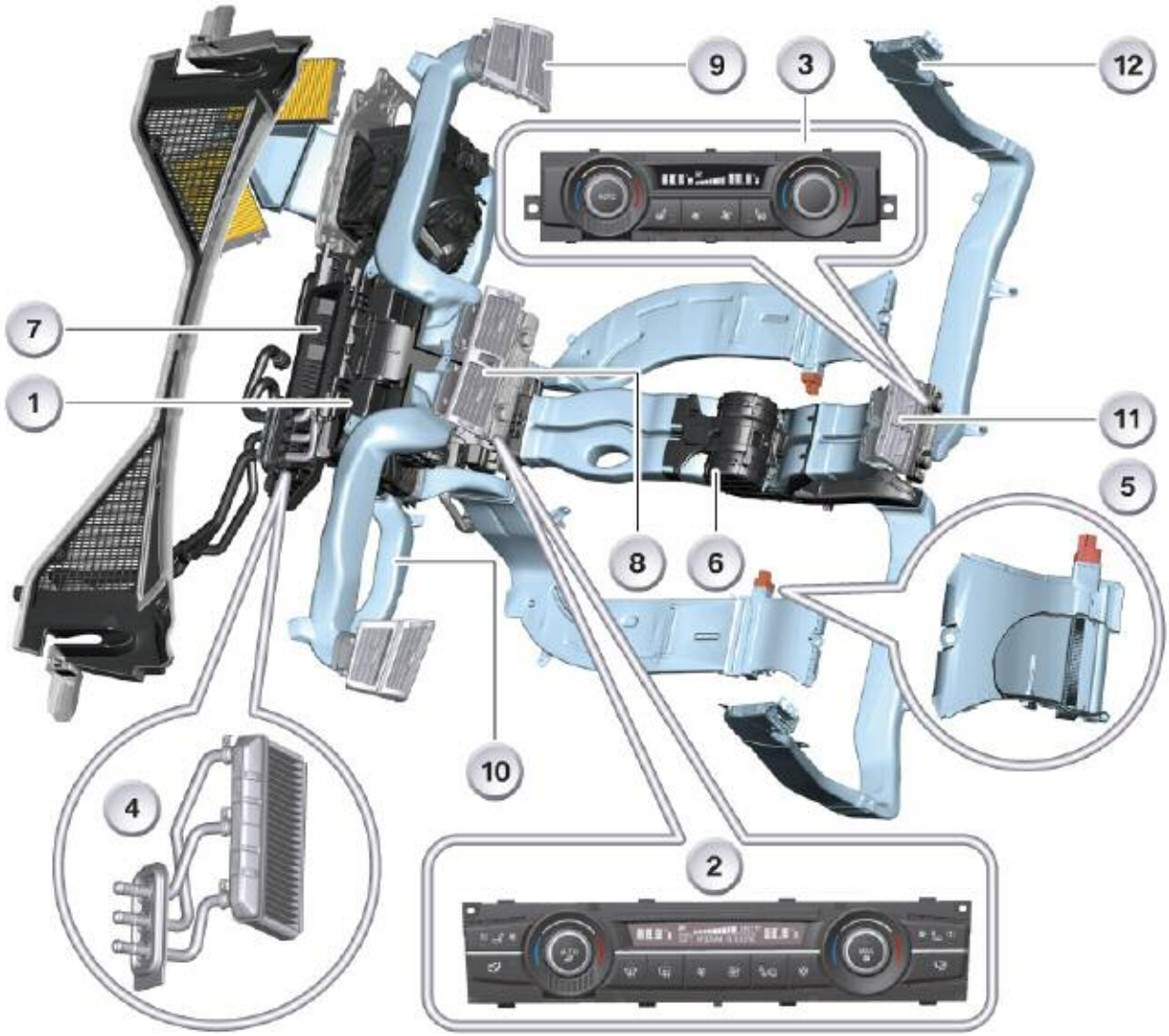

Index	Explanation	Index	Explanation
1	IHKA with rear automatic air conditioning system, 4-zone.	7	Defrost air outlet
2	IHKA, dual front temperature controls	8	Ventilation air outlet, front left/right
3	FKA, dual rear temperature controls	9	Ventilation air outlet, front left/right
4	Two inlet pipes to HWT, two water valves	10	Footwell air outlet, front left/right
5	PTC heating element in footwell air ducts rear left/right	11	Rear ventilation air outlet, center, left/right
6	Rear blower (FKA)	12	Ventilation air outlet, B-pillar left/right

cardiagn.com

IHKA with FKA Rear Automatic Air Conditioning System (4-zone)

The 4-zone air conditioning system consists of the IHKA control unit plus:

- Its own FKA control unit
- A separate rear blower
- Four additional outlet temperature sensors
- Air ducts in the B-pillars
- To separate PTC heating elements in the rear footwell air ducts
- Three additional actuator motors for air flap control at the heater/air conditioner (IHKA with FKA, total of thirteen actuator motors)

This system makes it possible to make separate left/right temperature settings for the first and second rows of seats, and also provides separate front/rear blower control. The rear blower enhances the air to flow to the rear center console and the B-pillar ventilation air outlets. The footwell ducts that deliver air to the second row of seat area can be switched off completely or provided with additional heating by energizing the PTC heating elements.

Adjustment and Operation of Rear Air-conditioning

The Climate Control Menu allows us to activate or de-activate the FKA rear climate control via the controller. A checked box next to “Rear Climate Control” function will show the system activated. The FKA control unit settings can be taken over by selecting the “Driver Settings” function and synchronized with the settings from the driver-side IHKA control unit. but as soon as the FKA controls are operated by the rear occupants the rear controls become active once again.

Rear Air Conditioning E70

cardiagn.com

IHKA with FKA rear automatic air conditioning, 4-zone/ heating and ventilation for 3rd row of seats, HB3SR

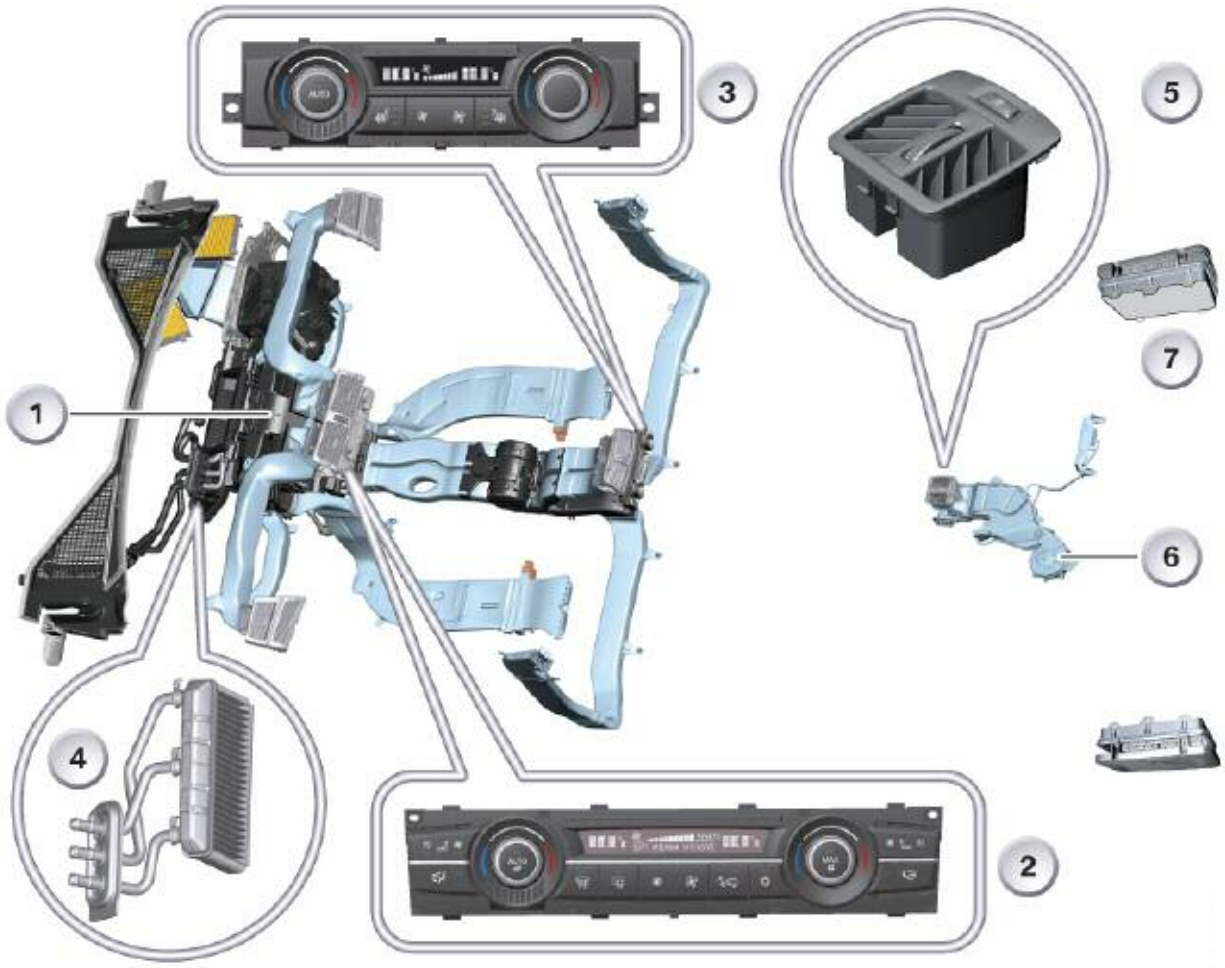

Index	Explanation	Index	Explanation
1	IHKA FKA, 4-zone	5	Control unit for integrated heating and ventilation of 3rd row of seats, HB3SR
2	IHKA operating unit, dual front temperature setting.	6	Heating and ventilation of 3rd row of seats (blower, PTC heating element, adjusting flap for air distribution)
3	FKA operating unit, dual rear temperature settings.	7	Vehicle interior ventilation
4	Two inlet pipes to HWT, two water valves		

cardiagn.com

Air Flow Control/Blower Speed Control

Air flow control is dependent on the following settings and parameters. Blower control automatic mode If automatic mode has been activated in the IHKA control unit, the blower speed is controlled in accordance with a characteristic map depending on the required nominal temperature and the interior and ambient temperature. The relevant automatic blower control is switched off by operating one of the blower buttons of the IHKA.

The Mode Switches to Manual

With the FKA control unit the blower output of the rear blower is switched to automatic using the AUTO button in the rotary actuator. If the blower buttons are pressed the FKA blower control switches to manual mode.

Blower Control Manual Setting

The blower control can be manually adjusted using a rocker button with the IHKA and FKA control units.

Air Distribution/Air Flap Control

Depending on the equipment specification (IHKA,IHKA with FKA) there are ten or thirteen air flap control actuator motors on the IHKA housing for controlling the air distribution in the vehicle.

Air flap control takes place using the automatic programs in the IHKA and FKA for heating/ cooling, depending on the request, depending on the required interior and ambient temperature. Air distribution/air flap control can also optionally (IHKA and above) take place depending on the amount of insolation, window fogging or the quality of the fresh air.

The air flow is distributed to the defrost, ventilation and footwell air outlets by the heater/air conditioner in accordance with the automatic program.

Air Distribution/Air Flap Control/Automatic Mode

Pressing the AUTO button on the control units causes the air flow control and the air distribution to take place in accordance with the automatic control unit programs.

Automatic mode is indicated by illumination of the yellow LED next to the AUTO button. Any intervention in automatic blower control or automatic air distribution causes the relevant part of the automatic control system to be switched off.

If manual intervention only takes place in the blower control, the automatic air distribution/ air flap control remains active.

If manual intervention only takes place in the air distribution/air flap control, the automatic blower control remains active.

The LED next to the AUTO button goes off in both cases if manual intervention takes place.

cardiagn.com

Manual Air Distribution/Air Flap Control Settings

The air distribution in the vehicle can be manually adjusted via the controller and/or the rocker button of the IHKA control unit. This kind of intervention in the automatic air distribution control causes air distribution automatic mode to be switched off. Manual adjustment of the front air distribution system is displayed in the relevant control menu in the CID.

Operation and Adjustment/Air Distribution

All control units of the IHKA equipment variant of the E70 also provide a facility for manually adjusting the air distribution using "rocker button air distribution" via the controller.

The menu has four default settings and one individually configurable setting at the driver's side, and three default settings and one individually configurable setting at the front passenger side.

When the rocker button is operated, an "Air distribution" pop-up menu appears on the control display.

The air stratification (ventilation temperature) can also be adjusted via the controller in this menu at the same time as the air distribution is being adjusted

Air Distribution / Ventilation

cardiagn.com

Air Stratification (Ventilation Temperature)

Adjusting the air stratification via the air blending flap adjusts the proportion of cold and warm air at the ventilation vents. This setting adjusts the ventilation temperature. Only cold air or warm air flows out of the ventilation vents at the maximum/minimum air blending flap positions.

The passenger can achieve individual cold/warm air distribution and stratification in the vehicle at a constant temperature setting using this stratification facility.

The air stratification at the front of the vehicle can only be adjusted via the controller and is displayed in the CID control menu.

The air stratification at the front can be adjusted separately for the left and right sides with the IHKA.

The air stratification in the rear can be adjusted using a potentiometer in the rear ventilation outlet.

The air blending flaps of the IHKA with FKA equipment variant can be controlled separately using two potentiometers, one in the left rear ventilation outlet, one in the right rear ventilation outlet. This means that the IHKA with FKA can provide individual 4- zone air stratification.

Note: Attention must be paid to the air blending flap settings when troubleshooting a heating and cooling performance complaint.

Automatic Programs (Gentle, Medium, Intensive)

With the IHKA and IHKA with FKA equipment variants, two additional automatic programs can be selected via the automatic programs selection menu in addition to the standard automatic programs.

The IHKA control unit can be used to select and adjust the automatic program using the AUTO button as a rocker button or via the controller.

The three different automatic programs

- Gentle
- Medium
- Intensive

Each have their own characteristic curves for blower control, air distribution and air flap control.

The individual selecting facility within these three automatic programs allows more customers to satisfactorily operate the heating/air conditioning system in their vehicles in automatic mode without having to switch to manual mode.

cardiagn.com

Operation and adjustment of the air conditioning system, automatic programs

All control units of the E70 IHKA equipment variant have a facility for switching between the three gentle, medium and intensive automatic programs using the "AUTO Toggle button".

The display is in the form of a pull-up menu in the CID when selecting and adjusting the automatic program using the AUTO button as a rocker button . However, the selection and the current setting also appear on the display of the IHKA control unit.

The automatic programs can also be selected and adjusted via the controller, with CID display. The air stratification adjusting facility appears in the air conditioning, automatic program selection menu first.

Automatic Programs

cardiagn.com

Defrost Function

The defrost function allows the control unit to be adjusted for defrost or de-misting the windshield at the push of a button.

- The blower is set to the maximum setting. The front windshield fresh-air flap and ventilation vents are opened to the maximum. The ventilation and footwell vent flaps are closed.
- A temperature cut-in takes place to control the interior temperature, depending on the ambient temperature.
- The de-ice function also remains active if the blower speed is reduced by manual intervention.

Note: In the version with FKA the rear blower speed is set to zero when the de-ice function is active.

Cold Start Interlock

The cold start interlock prevents the customer from being subjected to unpleasantly cold air when the engine starts and the engine temperature is cold.

- The front ventilation and footwell flaps are closed.
- The rear footwell flaps and the rear air blending flaps are also closed.

When the heating system heater core reaches the temperature level of the selected specified value, the air flap controllers are switched to automatic mode.

Preventing Window Misting (Window Misting Sensor)

In order to counteract front windshield misting caused by high humidity, the interior humidity and the windshield temperature are measured by a mist sensor.

If there is a risk of window misting, the following functions are activated depending on requirements:

- Further opening of de-ice flaps, windshield air outlet.
- Increase airflow volume via the blower.
- Reduce airflow quantity to footwell.
- Increase desired temperature value.
- Switch from circulated air mode/automatic circulated air mode to partial fresh-air operation.
- Switch from partial fresh-air operation with circulated air mode/automatic circulated air mode to fresh-air operation.

cardiagn.com

The conditions for these functions are:

- Engine running
- IHKA in automatic mode.

The window misting sensor is available from the IHKA equipment variant and above.

Heated Rear Window HHS

The heated rear window is activated by pressing the HHS button. The LED lights up. The heated rear window is switched off by pressing the button again. After a programmed heating period (10 minutes or 17 minutes) the heated rear window automatically switches to cyclic operation. If the heated rear window is activated during cyclic operation, a second heating period of 5 minutes starts.

Note: A prerequisite for heated rear window operation is KL15 and the "engine running" signal.

Residual Heat Function

The residual heat function uses the residual heat of an engine that has been turned off and is still warm to heat the vehicle interior. The functionality can only be activated within a run-on time of 15 minutes after terminal 15 off.

Fresh Air Circulation Mode/Automatic Air Recirculation Mode AUC

The heating/air conditioning system draws in fresh air through the fresh-air outlet between the windshield cowl and the hood via the filter elements in the IHKA housing. In order to prevent odors and emissions in the interior, the fresh air intake can be closed and the circulated air intake (air intake from vehicle interior) can be activated/opened.

Circulated air mode can be adjusted directly by pushing a button or automatically via the recirculated air control system. The recirculated air control button must be activated by pushing a button to do this. The air quality is then monitored by the AUC sensor, and if the quality deteriorates when the vehicle is stationary at a traffic light or driving through a tunnel, for example, the system switches from fresh air mode to recirculated air mode.

cardiagn.com

Function change:

Fresh Air, Automatic Air Recirculation, Air Recirculation
Both the IHKA control buttons and the MFL multi-function steering wheel can be used to select and adjust the fresh air, automatic air recirculation AUC and air recirculation functions.

The functions are always run through in the same way when operation takes place via the IHKA controls.

When the multi-function steering wheel is used, different functions are called up when the button is pressed depending on the initial setting.

Rain/Driving Light Solar Sensor

The rain/driving light solar sensor records the light intensity to which the vehicle interior is being subjected separately for the driver and passenger sides.

The temperature rise due to heat from sun radiation in the vehicle interior is compensated for in automatic mode by means of temperature specified value control intervention.

Compressor Control/Evaporator Control

The cooling power of the system is determined by the potential evaporating capacity of the evaporator. The A/C compressor draws in the gaseous refrigerant from the evaporator, compresses it and sends the refrigerant to the condenser. The refrigerant, which liquifies in the condenser expands via the expansion valve at the evaporator.

A/C compressors in the E70 with N52 are equipped with a magnetic clutch and an external control valve.

N62 engines that were built between 12/06 and 10/07 are equipped with a clutchless compressor with an electronic control valve. As of 10/07 the N62 will also be equipped with an A/C compressor with magnetic clutch and a control valve.

A/C MAX

The fastest possible cooling of the vehicle interior is achieved by pressing a button. Activating the A/C MAX function activates the maximum cooling power of the air conditioning system (compressor and evaporator). Recirculating air mode is activated. The blower is switched to the maximum speed, the air stratification is set to cold and the ventilating flaps are opened to the maximum.

A/C MAX mode is also retained if the blower speed is reduced.

cardiagn.com

Parked Car Ventilation

The Parked Car stationary ventilation can be activated directly via the controller under timer control or via a remote start.

When operated via the controller, the setting is displayed in the relevant control menu.

OFF Mode

The IHKA and FKA control units can be switched off using the relevant buttons for adjusting the blower speed and set to Off mode.

With the IHKA with FKA equipment variant, switching off the front IHKA automatically switches off the FKA as well.

Seat Heating/Seat Ventilation

Front SiH Seat Heating

When the seat heating button is pressed, the IHKA transmits the status to the seat modules or the junction box via the K-CAN. depending on equipment.

If the junction box is incorporated, the signals are relayed to the seat heating modules in the form of PWM signals.

The seat heating and the backrest heating are actuated by the relevant seat modules in accordance with the operating logic of the seat heating system.

If the energy management system requests a power reduction, the heating power can be reduced or switched off in three stages:

1. Heating power reduction from level three to level two.
2. Heating power reduction to 50% of level two.
3. Switch off seat heating.

cardiagn.com

Rear SiH Seat Heating without FKA

If the SiH button is pressed on the rear center console seat heating operating unit, the seat heating and the backrest heating are directly actuated by the relevant modules in the control unit.

If the energy management system requests a power reduction, the rear seat heating can be switched off via an overload-protection relay.

Rear SiH Seat Heating with FKA

If the SiH button is pressed on the FKA control unit, the operating status is transmitted to the driver/front passenger modules via a PWM signal. These control the seat heating and the backrest heating.

If the energy management system requests a power reduction, the heating power can be reduced in three stages:

Pressing the buttons for >1.2 seconds switches the seat heating off, regardless of the level currently selected.

SiL Seat Ventilation

When the seat ventilation buttons are pressed the IHKA transmits the status to the seat modules via the K-CAN. The seat ventilation and the backrest ventilation are actuated by the relevant seat modules.

If the energy management system requests a power reduction, the blower power can be reduced or switched off in three stages:

1. Blower power reduction from level three to level two.
2. Blower power reduction to 50% of level two.
3. Switch off blower.

cardiagn.com

Operation and setting air conditioning, driver seat climate, front passenger seat climate
With the optional seat climate equipment variant the IHKA control unit has a seat climate rocker button (SiH/SiL).

When the driver or front passenger seat heating (SiH) or seat ventilation (SiL) button is pressed, the relevant pull-up menu appears.

The relevant SiH/SiL level is always selected using the rocker button .

The seat/backrest heat distribution, which is also displayed in the menu, can only be selected using the controller.

cardiagn.com

Heating and Ventilation of Third Row of Seats (Optional Seat Concept 5+2)

An optional blower that can be activated using a button is installed for heating and ventilating the third row of seats. This blower draws in the air beneath the seats and blows it out between the seats in the 3rd row via the ventilation vent.

The air distribution at the ventilation vents of the auxiliary unit can be moved up and down using a knurled wheel with control flap. A PTC heating element in the air duct is activated by a limit switch at the end stop of the air outlet knurled wheel.

- The heated air flows into the footwell of the 3rd row of seats.
- The heating function can only be activated with the blower switched on.
- The air volume cannot be controlled.

Index	Explanation	Index	Explanation
1	Control unit for heating and ventilating the 3rd row of seats	3	Knurled wheel for air distribution flap with end stop switch to activate the PTC heating element
2	Blower for 3rd row of seats ON/OFF button	4	System unit for heating and ventilating the 3rd row seats

cardiagn.com

IHKA , 2-zone

Index	Explanation
1	IHKA , dual zone temperature setting, buttons for selecting automatic program and manual adjustment of air distribution.
2	IHKA, dual zone temperature setting, buttons for selecting automatic program and manual adjustment of air distribution with optional seat heating
3	IHKA, dual zone temperature setting, buttons for selecting automatic program and manual adjustment of air distribution with optional seat heating and active seat ventilation.

cardiagn.com

FKA Rear Automatic Air Conditioning (IHKA and FKA, 4-zone)

Index	Explanation
1	FKA rear automatic air conditioning control unit, dual zone temperature settings.
2	FKA rear automatic air conditioning control unit, dual zone temperature settings with rear seat heating.

Note: Vehicles with IHKA and FKA are capable of controlling the individual temperature in 4 separate zones.

cardiagn.com

System Components

Fresh Air/Recirculating Air Filter

Fresh air is drawn in via two filter elements in the intake area in front of the bulkhead. The recirculated air is drawn in at the side by the blower via separate recirculating air filters.

Fresh Air Filtering

A particulate filter or a micro/activated charcoal "combination filter" is used for the E70 fresh air intake. The particulate filter (also referred to as a microfilter) removes dust, pollen, soot and other dirt from the fresh air that is needed to control the climate of the vehicle. The adsorption filter (activated charcoal filter) has the job of removing the pollutants (hydrocarbons, acidic gasses) that mainly occur in high concentrations under smog conditions from the fresh air that is needed to control the climate in the vehicle.

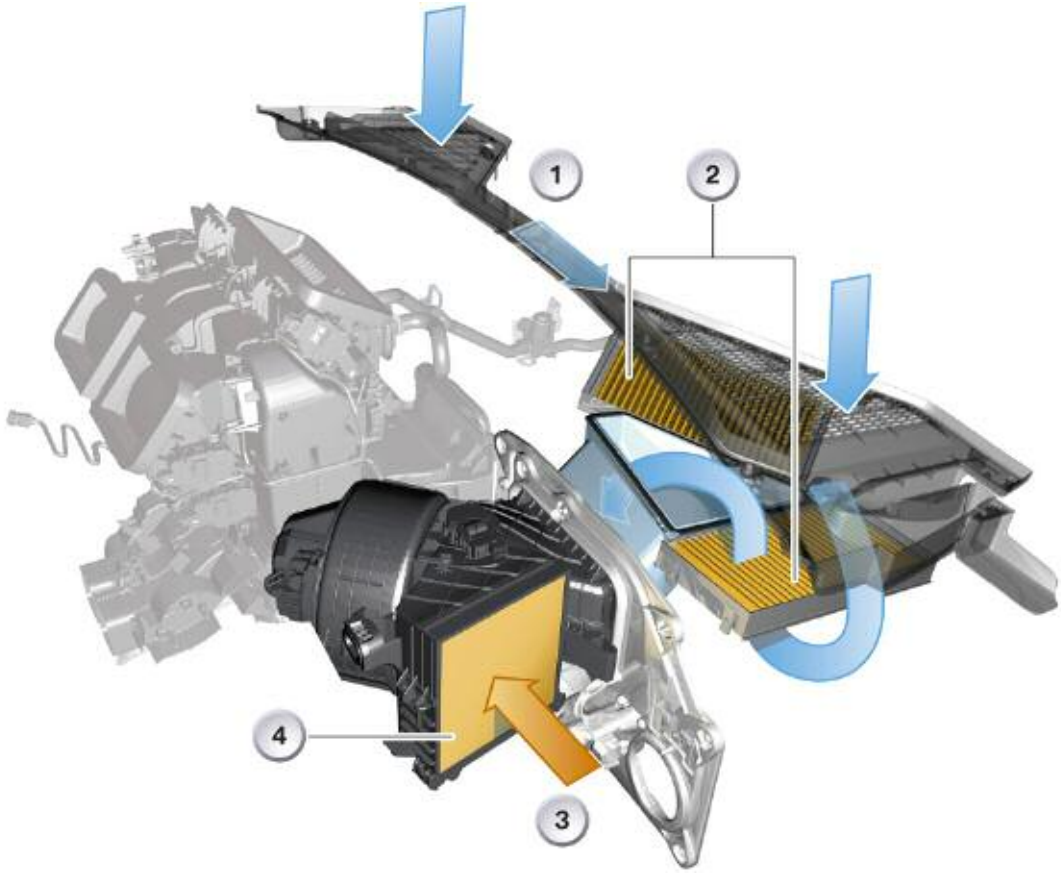

Index	Explanation	Index	Explanation
1	IHKA fresh air intake	3	IHKA recirculated air intake
2	IHKA fresh air filter	4	IHKA recirculated air filter

cardiagn.com

Recirculated Air Filtering

A new type of honeycomb filter is used in the recirculated air intake. The versions for fresh air particulate filters can also be used for filtering recirculated air, but are used for cleaning the air in the passenger compartment.

Filter types and equipment in the E70 All filters are electrostatically charged during manufacture and have the characteristic of attracting particles and holding them in, therefore cleaning the air.

The performance figures of an adsorption filter are initial pressure loss, particle separation, dust storage capacity, gas adsorption (such as n-butanes, sulphur dioxide, toluene) and are independent of the filter surface and the air-mass flow.

In order to be able to cope with customer specific filter usage and associated change interval increases and reductions, the filter change intervals of the E70 have not been stored in the CBS (Condition Based Service) system.

Note: The filter change intervals can be found in the relevant service literature.

Evaporator

The evaporator is a flat-tube evaporator with a chromium-free coating. This coating makes the surface smoother and more corrosion resistant that previous versions.

A temperature sensor inserted at the side downstream of the evaporator records the evaporator temperature and reports it to the IHKA.

In order to prevent odors, BMW AG recommends two different ways of cleaning the evaporator. See workshop system documentation for more information.

Heater Core

The heater core of the IHKA has two inlet pipes, therefore providing right/left temperature separation and its maximum internal temperature is regulated to 96°C. This is achieved by closing the water valves at 96°C. The control opens them again at 94°C. If the water valve is defective, the coolant temperature could exceed the permitted heater core temperature. When the temperature exceeds 98°C, the map controlled thermostat is then regulated by the DME (ECM) to maintain the programmed temperature.

Request for additional heating power

Additional heating power can be requested by the heat management function in the DME (ECM) via a special function control signal from the IHKA. This additional heating power is achieved by the DME (ECM) by reducing the efficiency of the engine in order to utilize more energy for heating.

cardiagn.com

IHKA Housing, Evaporator, Heater Core

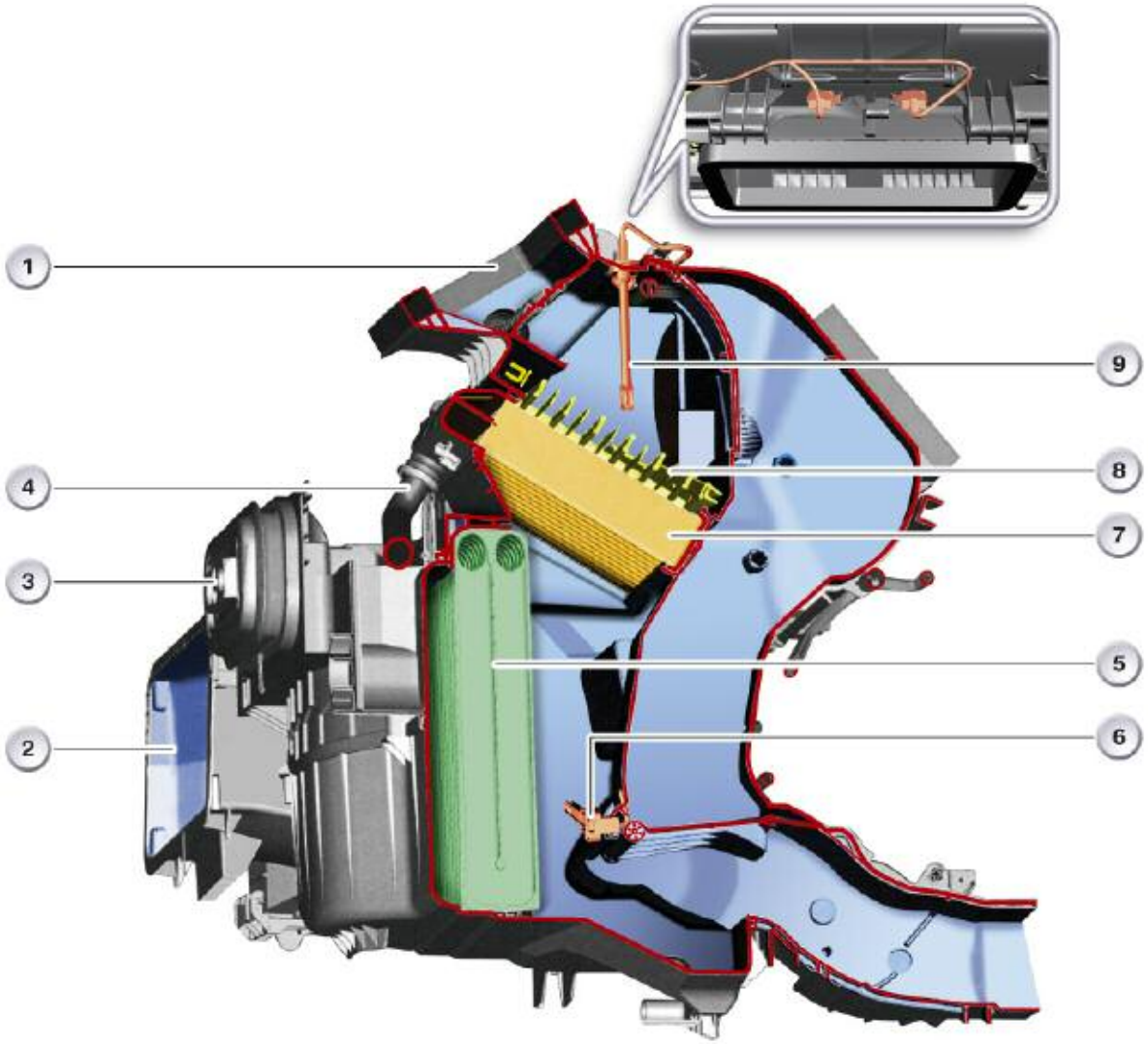

Index	Explanation	Index	Explanation
1	IHKA housing	6	Evaporator temperature sensor
2	Fresh air intake	7	Heater core
3	Expansion valve coolant connection	8	Electric PTC auxiliary heater (not for US vehicles)
4	Heater core water connection	9	Heater heat exchanger temperature sensor
5	Evaporator		

cardiagn.com

Blower Unit

The fresh air/recirculated air blower is flange mounted to the right side of the IHKA housing.

The specified voltage for the blower is provided by the IHKA (Master) as a defined control signal (PWM signal) via a single-wire interface of the blower output stage (Slave).

The blower motor is actuated by the blower output stage depending on this variable control signal. The line connections from the IHKA to the final stage are monitored by the IHKA.

The blower and the output stage can be replaced separately. See appropriate workshop systems documentation.

The motor voltage is limited to 12.5V by the software.

If an overload is detected at the output stage output or temperature protection is activated, the engine output is reduced.

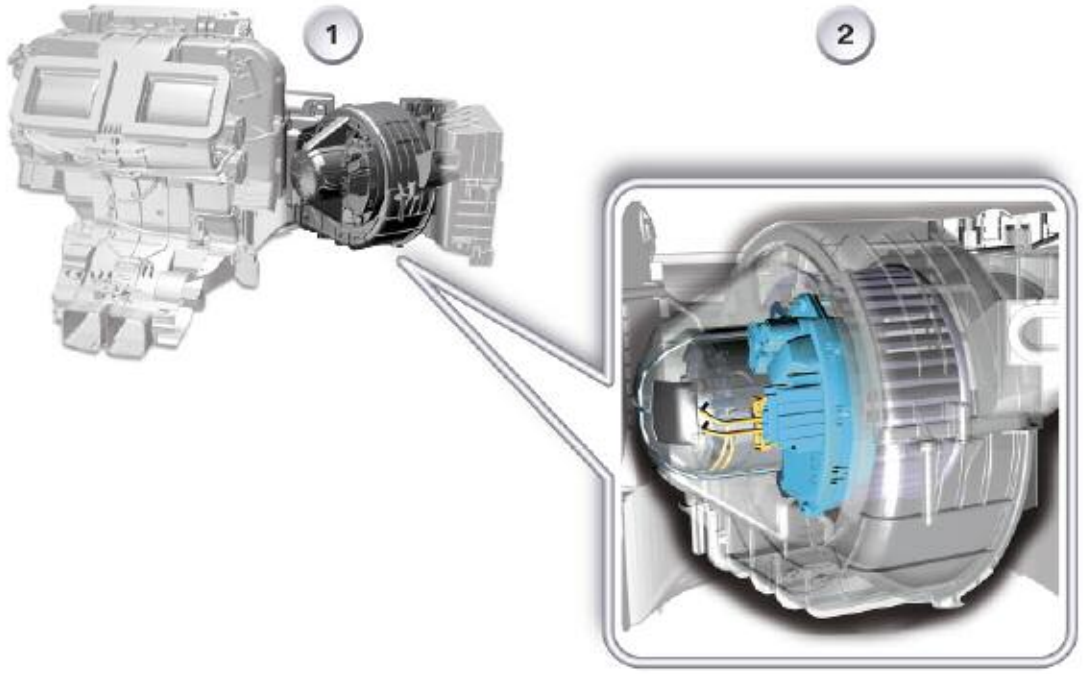

Index	Explanation	Index	Explanation
1	IHKA blower housing	2	IHKA, blower output stage

cardiagn.com

Defrost Channel "Near the Window"

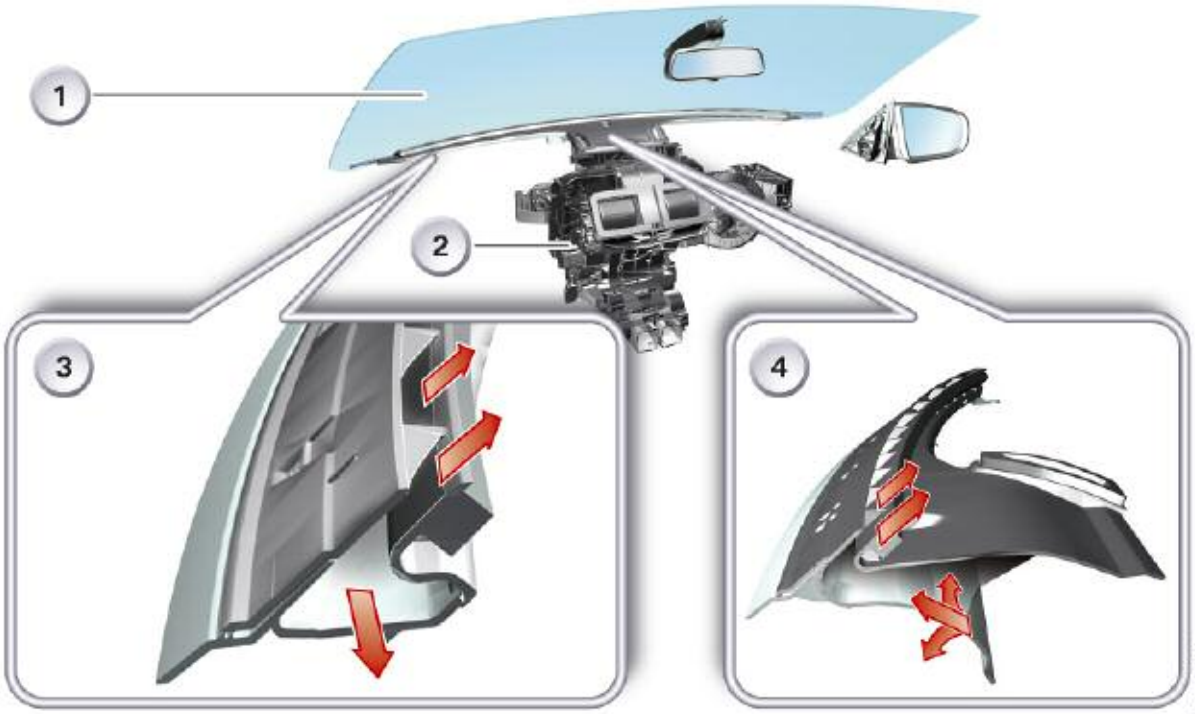

Index	Explanation	Index	Explanation
1	Windshield	3	Sectional diagram 1, defrost channel close to the window
2	Heater/air conditioner	4	Sectional diagram 2, defrost channel close to the window

Note: A new type of defrost system with air vents close to the window has been developed for the E70 for evenly defrost the windshield and the wiper system. The defrost channel is screwed directly to the bulkhead.

cardiagn.com

Air Flap Control Actuator

The IHKA actuator motors are all designed as identical components and are actuated by the IHKA via the LIN bus. When an actuator motor is being replaced it must be ensured that the correct plug is connected to the relevant motor from the wiring harness end. The plug order can be found in the wiring diagram. Then an addressing run must be started using the BMW diagnostics system. The IHKA detects the actuators that are connected in series and assigns an address to the new motor if necessary.

The actuation of the addressing run is integrated in the diagnostics system in the service function (re-address body, heating/air conditioning functions, flap motors). A function test (reference run) is also integrated in the diagnostics system, with which the operational capability and the adjusting path of the motors can be tested.

cardiagn.com

IHKA 2-zone (green),IHKA, FKA 4-zone (orange)

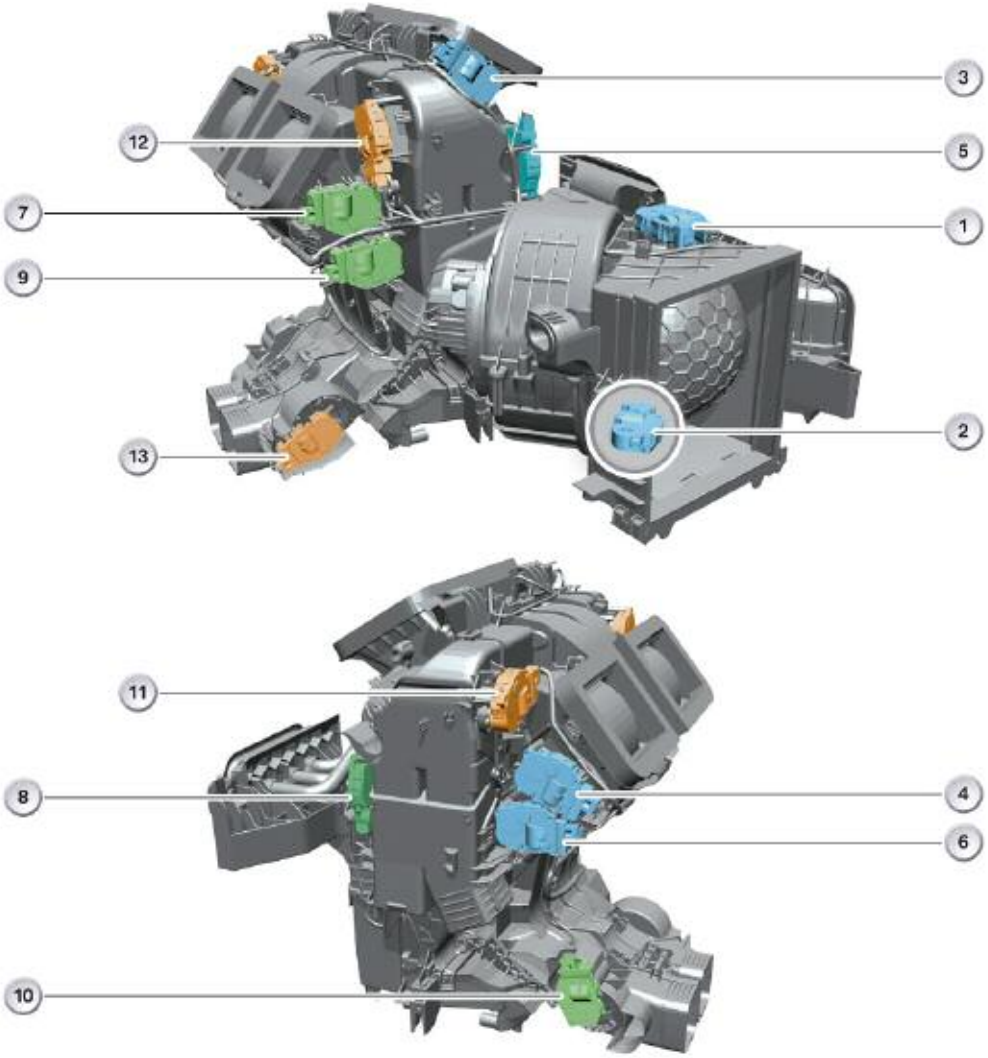

Index	Explanation	Index	Explanation
1	Actuator motor, fresh air/recirculating air	8	Actuator motor, left front footwell
2	Actuator motor,dynamic pressure compensation	9	Actuator motor, right front air stratification
3	Actuator motor, defrost	10	Actuator motor, left/right rear air stratification
4	Actuator motor, front left/right ventilation	11	Actuator motor, left rear footwell
5	Actuator motor, front right/left footwell	12	Actuator motor, right rear footwell
6	Actuator motor, front left/right air stratification	13	Actuator motor, right rear air stratification/shut-off
7	Actuator motor, right front ventilation		

cardiagn.com

IHKA, 2-zone, Overview of Air Distribution Flaps

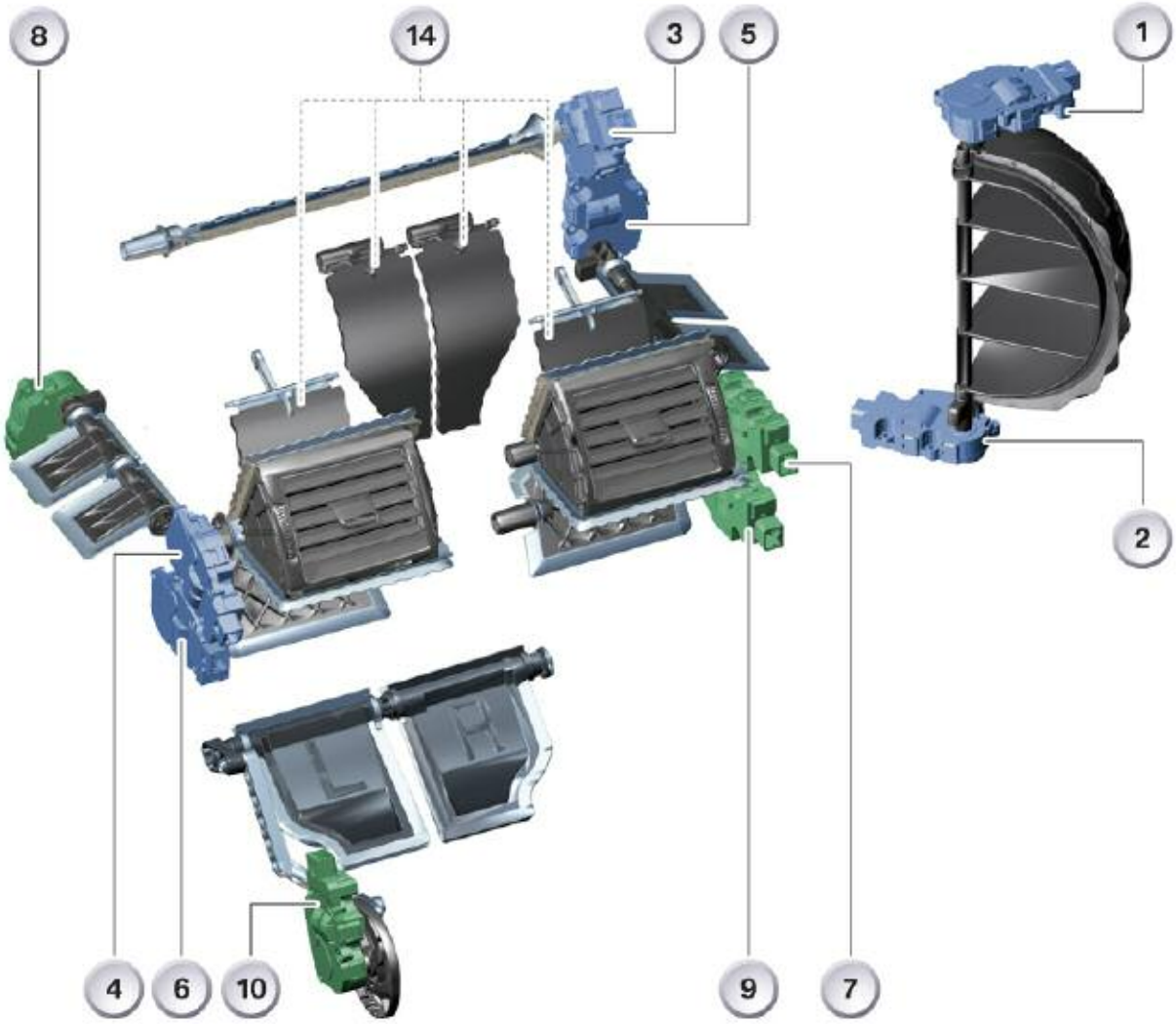

Index	Explanation	Index	Explanation
1	Actuator motor, fresh air/recirculating air	8	Actuator motor, left front footwell
2	Actuator motor,dynamic pressure compensation	9	Actuator motor, right front air stratification
3	Actuator motor, defrost	10	Actuator motor, left/right rear air stratification
4	Actuator motor, left front ventilation	14	Housing, internal non-return flaps
5	Actuator motor, right front footwell		
6	Actuator motor, left front air stratification		
7	Actuator motor, right front ventilation		

cardiagn.com

IHKA with Rear Automatic Air Conditioning, 4-zone,
Overview of Air Distribution Flaps

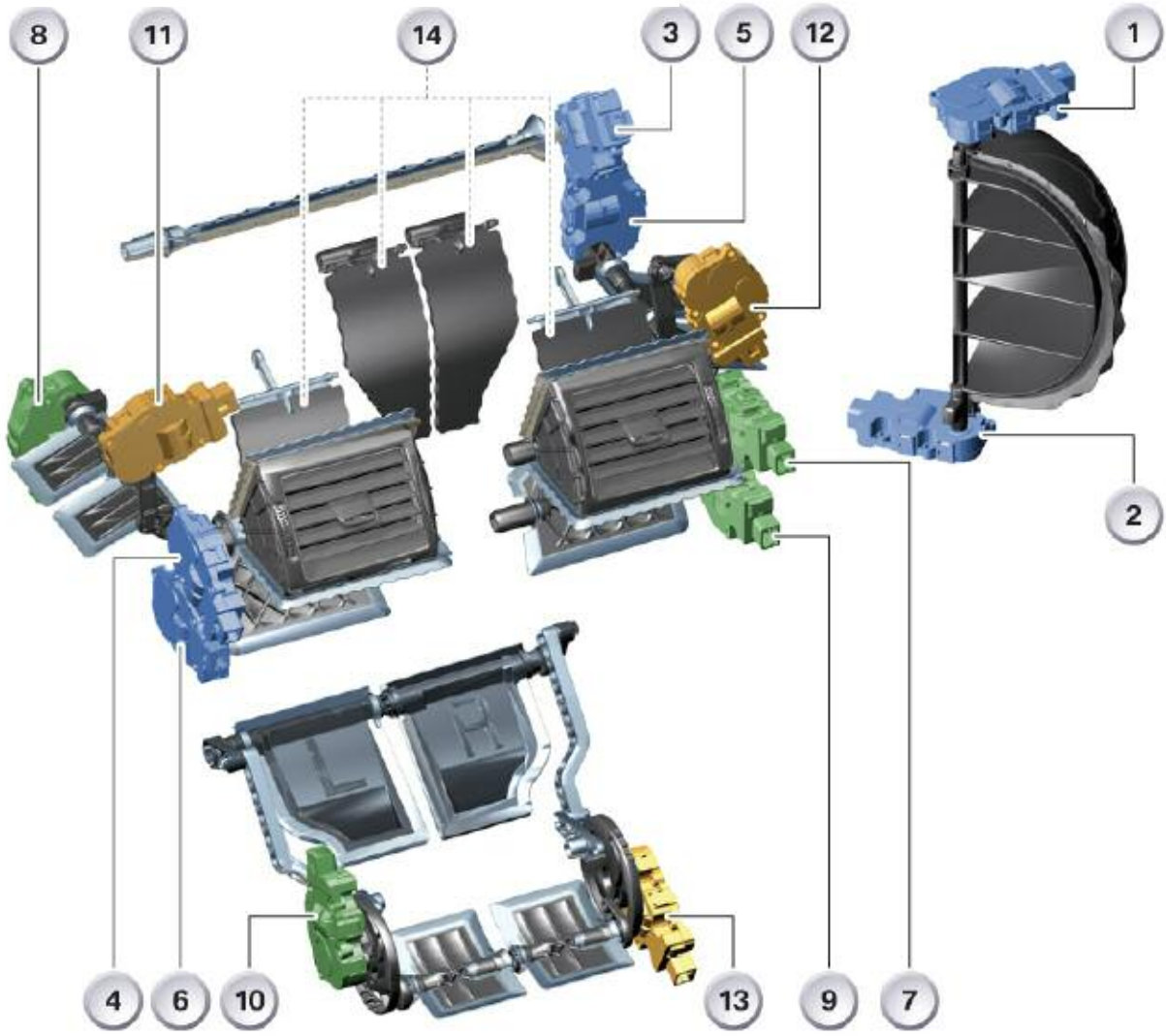

Index	Explanation	Index	Explanation
1	Actuator motor, fresh air/recirculating air	8	Actuator motor, left front footwell
2	Actuator motor, dynamic pressure compensation	9	Actuator motor, right front air stratification
3	Actuator motor, defrost	10	Actuator motor, left rear air stratification/shut off
4	Actuator motor, left front ventilation	11	Actuator motor, left rear footwell
5	Actuator motor, right front footwell	12	Actuator motor, right rear footwell
6	Actuator motor, left front air stratification	13	Actuator motor, right rear air stratification/shut-off
7	Actuator motor, right front ventilation	14	Housing, internal non-return flaps

cardiagn.com

IHKA Controls, Control Unit

The number of E70 IHKA control and operating units is determined by the functional expansion from 2-zone to 4-zone air-conditioning, optional SiH heated seats, SiL seat ventilation and the optional version with and without electric steering column adjustment eLSV.

The IHKA control units are incorporated in the car's electrical system via the K-CAN and the LIN bus using the following plug-in connections:

- Main wiring harness
- Air conditioning wiring harness
- SZM
- eLSV

IHKA Operating Unit/Control Unit Rear View, Connector View

Index	Explanation	Index	Explanation
1	IHKA control unit, rear view	4	SZM plug view
2	Main wiring harness plug view	5	eLSV plug view
3	Air conditioning wiring harness plug view		

cardiagn.com

Temperature, Air Flow and Air Distribution Control

The IHKA is the master for controlling the temperature, the air flow and the air distribution in the vehicle interior. This is done by reading in the sensor values and converting them into actuator control commands in the automatic programs.

The IHKA operating units (control units) have up to four different 5-volt voltage ranges:

- Temperature sensors (heater core, evaporator, ventilation)
- SZM logic supply
- SZM function lighting and spotlight
- eLSV (option)

Two 12-volt voltage supply ranges:

- LIN
- eLSV

The signals that are evaluated in the junction box and the FZD roof function center are presented to the IHKA control unit via the CAN bus, where they must be read in and processed.

IHKA Sensors

NTC Evaporator Temperature Sensor

In order to prevent the evaporator from icing up and implementing sliding evaporator control, the evaporator temperature sensor transmits its signal to the IHKA.

The sliding temperature control controls the evaporator temperature within a temperature range of 2°C to 8°C.

The temperature sensor default value is -2°C.

Heater Core Temperature Sensor(s)

Depending on the equipment specification, one or two heater core temperature sensors are installed to record the air heating downstream of the heater core.

With the IHKA, 2-zone and IHKA w/FKA, 4-zone, two sensors record the temperatures of the (separate for left/right) heat core sections. The temperature sensor default value is 55°C.

Front Interior Temperature Sensor

A ventilated temperature sensor is installed for recording the temperature in the vehicle interior. The default value is 20°C.

cardiagn.com

Front Center Ventilation Temperature Sensor(s)

Depending on the equipment variant, the signal values from one or two sensors in the ventilation outlets are still used to control the temperature in the vehicle interior.

The IHKA records the separately adjustable right/left temperatures with two sensors.

The ventilation temperature sensor default value is 20°C.

Center Front Ventilation Air vent Outlet

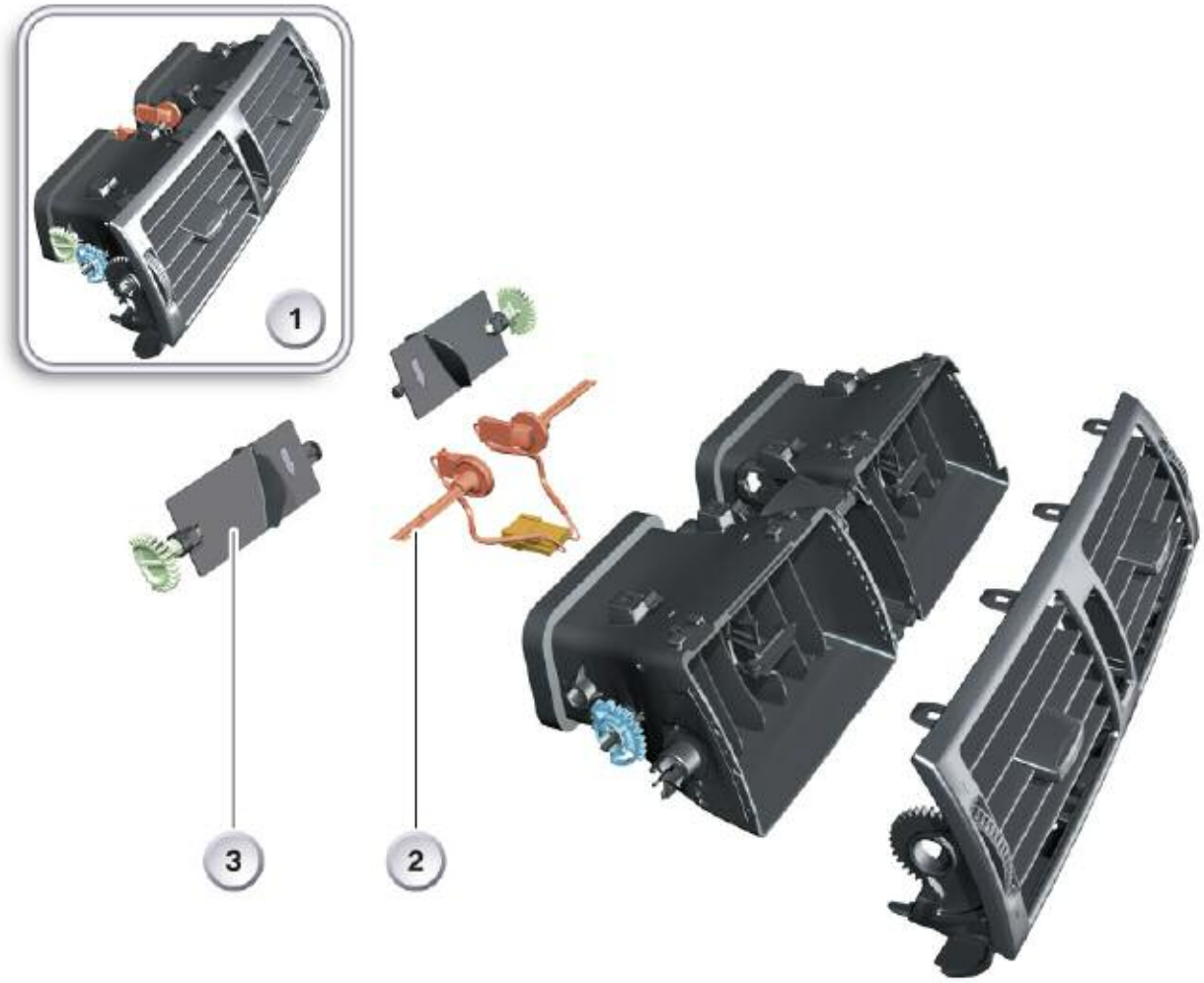

Index	Explanation	Index	Explanation
1	Center front ventilation outlet IHKA	3	Manual shut-off flap, front left/ right ventilation
2	Front left/right ventilation temperature sensors		

cardiagn.com

Ambient and Engine Temperatures

The ambient and engine temperature signal values are made available to the IHKA via the K-CAN.

Rain/Driving Light Solar Sensor

Via roof function center FZD The new rain/driving light solar sensor RLSS of the E70 is clipped into a retaining ring beneath the windshield mirror base cover. The rain/driving light solar sensor separately records the insolation acting upon the vehicle occupants for the left and right halves of the vehicle.

It generates two signals that are proportional to the insolation acting upon the vehicle occupants. The sensor signal is read in by the FZD via the LIN bus and relayed to the IHKA via the K-CAN.

The signals are used by the IHKA to regulate the left and right air volume and ventilation temperature.

Rain/Driving Light Solar Sensor RLSS and Mist Sensor BSS

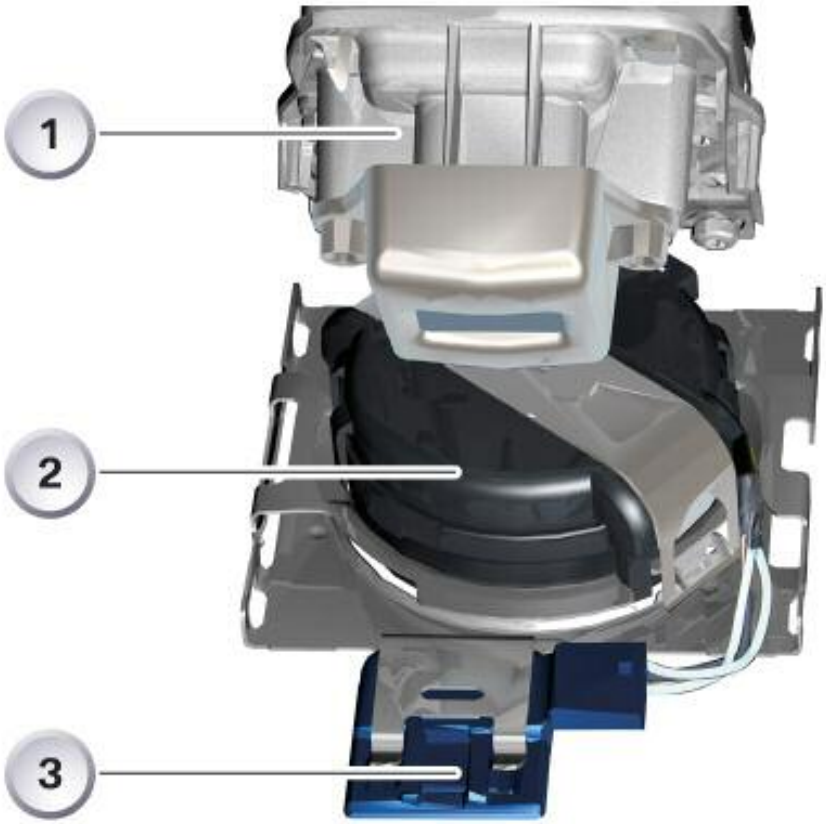

Index	Explanation	Index	Explanation
1	Front window mirror base	3	BSS mist sensor
2	RLSS rain/driving light solar sensor		

cardiagn.com

Mist Sensor via FZD

The mist sensor BSS is directly clipped to a bracket on the rain/driving light solar sensor beneath the mirror base cover.

The sensor provides early window mist detection, even before the driver can see any. Counter measures are taken automatically at an early stage, without the need for driver intervention. Good ventilation is needed for the sensor to operate efficiently. Suitable ventilation slots have therefore been provided in the mirror base cover that provide the sensor with an adequate amount of airflow.The sensor has to be within the range of the windshield wipers so that temperature changes caused by snow or ice on the other side of the windshield can be compensated for. The "glass conditions" that are present in the driver's field of view must also exist at the sensor. This is the only way for conclusions to be drawn about the window mist in the driver's field of view from the mist at the sensor.

A capacitive sensor element is used for early detection of possible dew formation on the windshield or for removing mist that is present on the windshield.

The sensor is supplied with 5V by the FZD. There is a frequency signal at the sensor output. The signal, which is evaluated by a regulator, is read in by the FZD and relayed to the IHKA via the K-CAN.

System hardware:

- Windshield
- Condensation sensor
- FZD
- IHKA.

Peripherals:

- Blower
- Ventilation flaps
- Compressor
- Water valve.

cardiagn.com

Pressure Sensor via Junction Box

The refrigerant pressure input signal is a direct junction box input signal and is relayed to the IHKA via the K-CAN. The IHKA requests actuation of the auxiliary blower by the DME (ECM) depending on the refrigerant pressure.

The IHKA determines the relevant A/C compressor load torque on the basis of the input signals from the pressure sensor and the compressor speed. The DME (ECM) control units are notified of the load torques by the IHKA and used by the DME (ECM) as input variables for actuating the electric fan.

Refrigerant Circuit Pressure Sensor

cardiagn.com

AUC Sensor

The AUC sensor is an air quality sensor and is used to control the ventilation in the vehicle interior (fresh air, recirculated air) in combination with the IHKA control unit, depending on how much traffic-specific pollutant the fresh air contains. This increases the well-being of the occupants and reduces the amount of pollutant to which the occupants are subjected.

The AUC sensor is a fully integrated system consisting of the sensor element, the signal processing system and a digital interface.

A metal oxide sensor is used, which is extremely sensitive to different odors and exhaust emissions that typically occur in traffic.

The signal processing unit calculates the air quality level by continuously monitoring the quality of the fresh air. The IHKA control unit is notified of this via the junction box interface. Depending on other parameters (ambient temperature, humidity, road speed etc.), the IHKA control unit decides whether to allow the recirculated air request from the AUC sensor (including determination of the duration thereof) or suppress it.

The AUC sensor is installed at the air filter housing in the E70.

An important task that is performed by the electronics is accurate control of the sensor operating temperature. The sensor element needs an operating temperature of approximately 300°C. The sensor detects gases that can be reduced and oxidized. The main ones are carbon monoxide CO (gasoline) and nitrous oxide NO as an indicator of soot particles from diesel vehicles.

AUC Sensor at E70 Filter Housing

cardiagn.com

Refrigerant Circuit

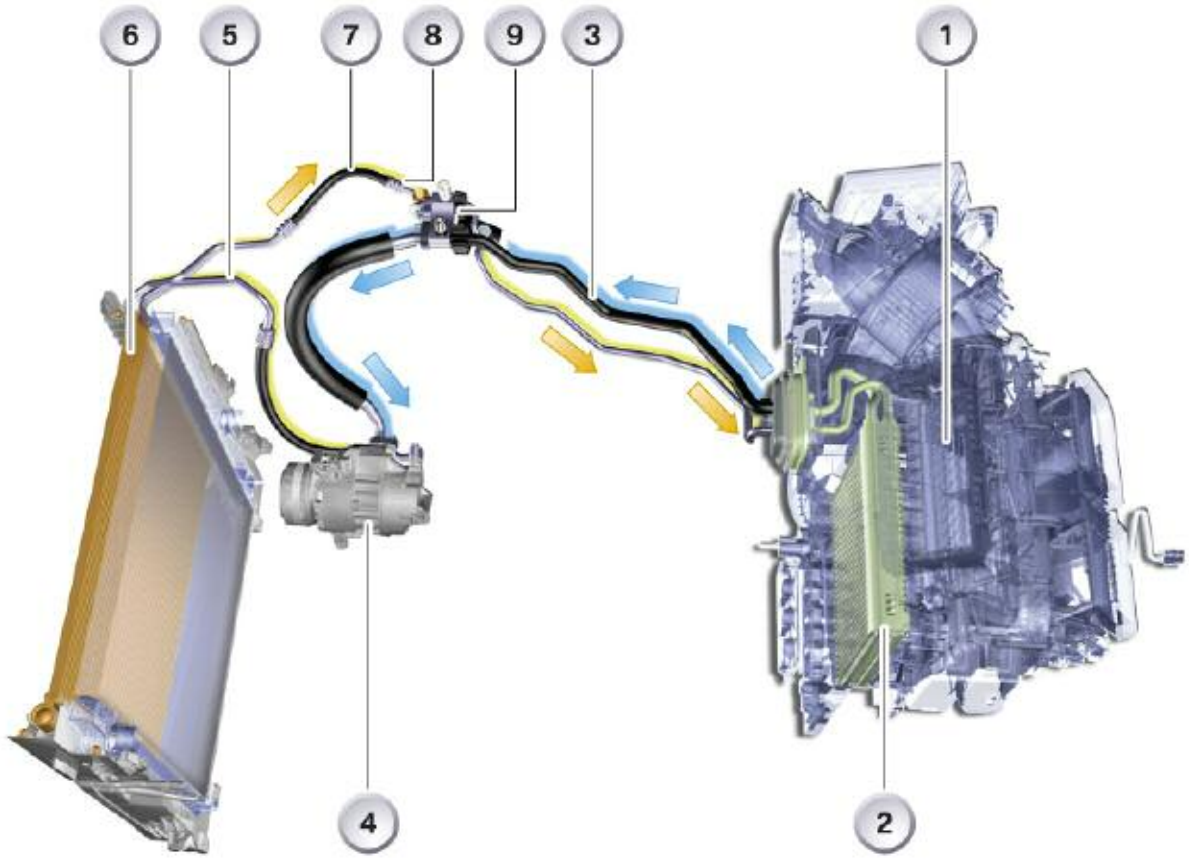

Index	Explanation	Index	Explanation
1	IHKA housing	6	A/C condenser module w/integrated drier
2	Evaporator	7	Pressure line to evaporator
3	Intake pipe	8	Refrigerant circuit pressure sensor
4	A/C compressor (refrigerant compressor) with coupling and externally controlled control valve.	9	Screw fastening point of lines
5	Pressure line to A/C condenser		

cardiagn.com

A/C Compressor Control

The IHKA is the master for controlling the A/C compressor. Pressing the AC button on the air conditioning system operating unit switches the air conditioning system to the ready state.The IHKA transmits a speed increase request to the DME (ECM).

Depending on the temperature and the nominal-value setting, the IHKA sends a cooling power request to the DME (ECM) If the DME (ECM) is ready and in a position to provide a torque of > 20 Nm, the DME (ECM) issues a release for a load connection of up to 30 Nm. This release is also monitored by the junction box. The IHKA issues a command to the junction box to couple the connection. The junction box returns the coupling status to the DME (ECM)

The compressor output is controlled by the IHKA control unit by means of an infinitely variable control valve. The IHKA control command is converted into infinitely variable proportional powering of the control valve in the junction box.

The control is designed as "sliding evaporator control".

The evaporator temperature is controlled to a value of between 2°C and 8°C depending on the cooling power request. The temperature sensor signal in the evaporator is used as a feedback signal to the IHKA control unit. The coolant request is limited by the potential evaporating power of the evaporator.

The evaporator is prevented from icing up by controlling the compressor output (appropriate reduction).

In order to reduce CO_2 emission, avoid unstable conditions when the engine is idling and for full load acceleration the DME can activate a compressor shut-off via the junction box. If appropriate parameters are present, the solenoid coupling of the compressor is opened.

K-CAN signals for controlling the A/C compressor at the IHKA control unit

In/out	Signal	Source/sink
Out	Cooling power request Torque request	DME Junction box
In	Release and provision of torque	DME Junction box
Out	Close coupling	Junction box
Out	Power control valve	Junction box
In	Compressor coupling status signal	Junction box

cardiagn.com

Heater Water Valves

The heater water valves are actuated by the junction box for controlling the temperature of the heat exchanger in accordance with the information from the IHKA. The "filling station effect" function is provided by the junction box. The water valves are kept closed for three minutes after terminal 15 has dropped to do this.

Coolant Pump

Depending on the engine variant, different types of coolant pump are used to circulate the coolant. In order to provide the coolant flow rate that is required at low engine speeds, an electric auxiliary water pump is installed (exception: the N52)

N52B30-3.0i equipped vehicles will use an electric water pump with no need for an auxiliary pump.

N62B48-4.8i equipped vehicles will use a mechanical water pump with an auxiliary pump.

The electric coolant pump of the N52 engine is actuated by IHKA request directly via the DME (ECM) through the K-CAN.

The electric auxiliary water pump is actuated by IHKA request by the junction box through the K-CAN. The auxiliary water pump is also needed for the residual heat function. The residual heat function can also be achieved using the circulation pump if the vehicle is equipped with a circulation pump.

Residual Heat Function

The following on/off conditions must be taken into consideration when residual engine heat is being used to heat the interior with the engine switched off.

Switch-on conditions	Switch-off conditions
Terminal 15 OFF	Terminal 15 ON
Run-on time active (15 min.)	Residual heat on (15 min. expired)
Residual heat button on	Residual heat button off
Ambient temperature < 25 °C	Activation OFF (with terminal R)
Engine temperature > 60 °C	Power management switch-off request
Battery Voltage > 11.4 Volt	Battery Voltage < 11 Volt

cardiagn.com

Heated Rear Window (HHA)

The heated rear window is activated by pressing the HHS button on the IHKA operating unit. The signal is relayed to the junction box by the IHKA via the K-CAN. This switches a relay for powering the HHS.

Activation is indicated by the function indicator lamp in the IHKA. Deactivation takes place after the first heating period has elapsed (10 minutes or 17 minutes) or the button is pressed again.

The "first heating period" is intended to allow the rear window to fully de-ice/demist.

If the HHS button is pressed during the cyclic operation, the after heating phase starts (2nd heating period; 5 minutes).

The "second heating period" is intended to give the rear window more time to de-ice/demist if necessary.

The cycling is intended to keep the rear window free of ice and moisture.

The HHS is not operated continuously during the cycling phase, but in a rhythmic cycle.

The active timer is stopped after "terminal 15 OFF".

The status of the HHS is saved during the run-on time and restored with the relevant remaining timer time if "terminal 15 ON" occurs again within the run-on time.

After a reset and "terminal 15 ON" after a power down, the HHS is in deactivated mode.

The HHS is switched off during "terminal 50 ON" in order to protect the battery during the restart operation.

HHS switch-on conditions

- Terminal 15 ON
- Activated operating condition
- Engine running
- No restart operation
- No restriction caused by energy saving mode.

Front Air Stratification

The air blending flap can be adjusted via the controller for air stratification and ventilation tion temperature control. IHKA has a separate right/left air blending flap adjusting facility.

Rear Air Stratification

IHKA has a potentiometer in the ventilation outlets at the rear center console for adjusting the rear ventilation air stratification.

cardiagn.com

Rear Automatic Air Conditioning System (FKA)

FKA Control Unit

The FKA is incorporated in the vehicle system via the K-CAN. The FKA operating unit and control unit have a 12-volt and a 5-volt power supply area.

The footwell and ventilation temperature sensors and the air stratification potentiometer are supplied with 5 volts by the FKA.

FKA Control Unit Rear View, Plug Connector

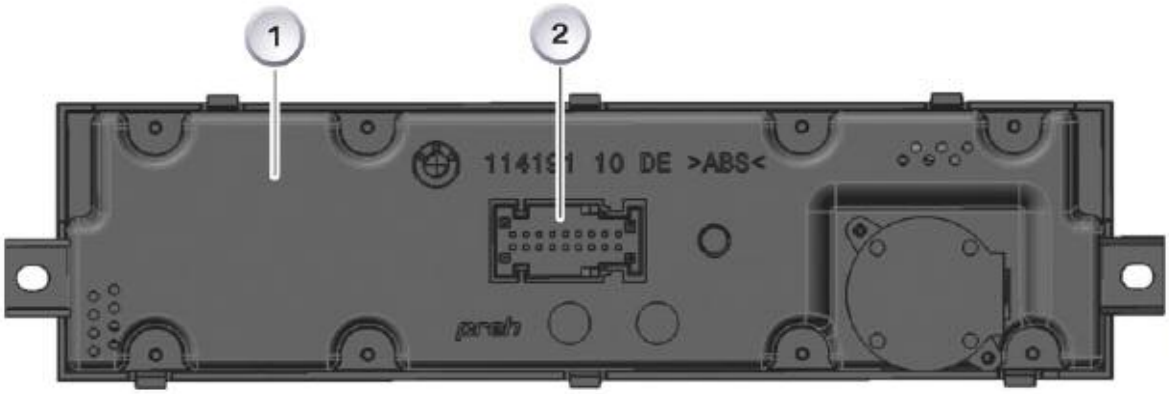

Index	Explanation	Index	Explanation
1	FKA rear automatic air-conditioning operating unit and control unit,rear view	2	FKA plug connector details

cardiagn.com

FKA Sensors

Rear Interior Temperature Sensor (FKA)

Like the IHKA, the FKA control unit has an interior temperature sensor with forced ventilation.

Rear Center Ventilation Temperature Sensors (FKA)

The delivery temperature in the FKA rear center ventilation is measured by two temperature sensors in the ventilation outlet.

Rear Footwell Temperature Sensors (FKA)

The delivery temperature at the rear footwell air ducts is measured by two temperature sensors in the footwell air ducts. The footwell temperature sensor default value is 55°C.

Rear Interior Temperature Control (FKA)

The FKA reads the signals from the interior temperature, rear footwell channel and rear ventilation temperature sensors in order to control the temperature in the rear. The sensor signal values are transmitted to the IHKA by the FKA and centrally evaluated by a controller in the IHKA.

The values of the calculated front and rear nominal temperatures are both used to calculate blower settings.

The FKA receives input from the IHKA that is used for blower control and controlling the rear footwell temperature.

Note: If the actual rear temperature is greater than the specified rear temperature, the air flow from the footwell air outlets is restricted. If the rear footwell temperatures are less than the specified values, the PTC heating element in the rear footwell channels are activated by the FKA.

cardiagn.com

Rear Blower

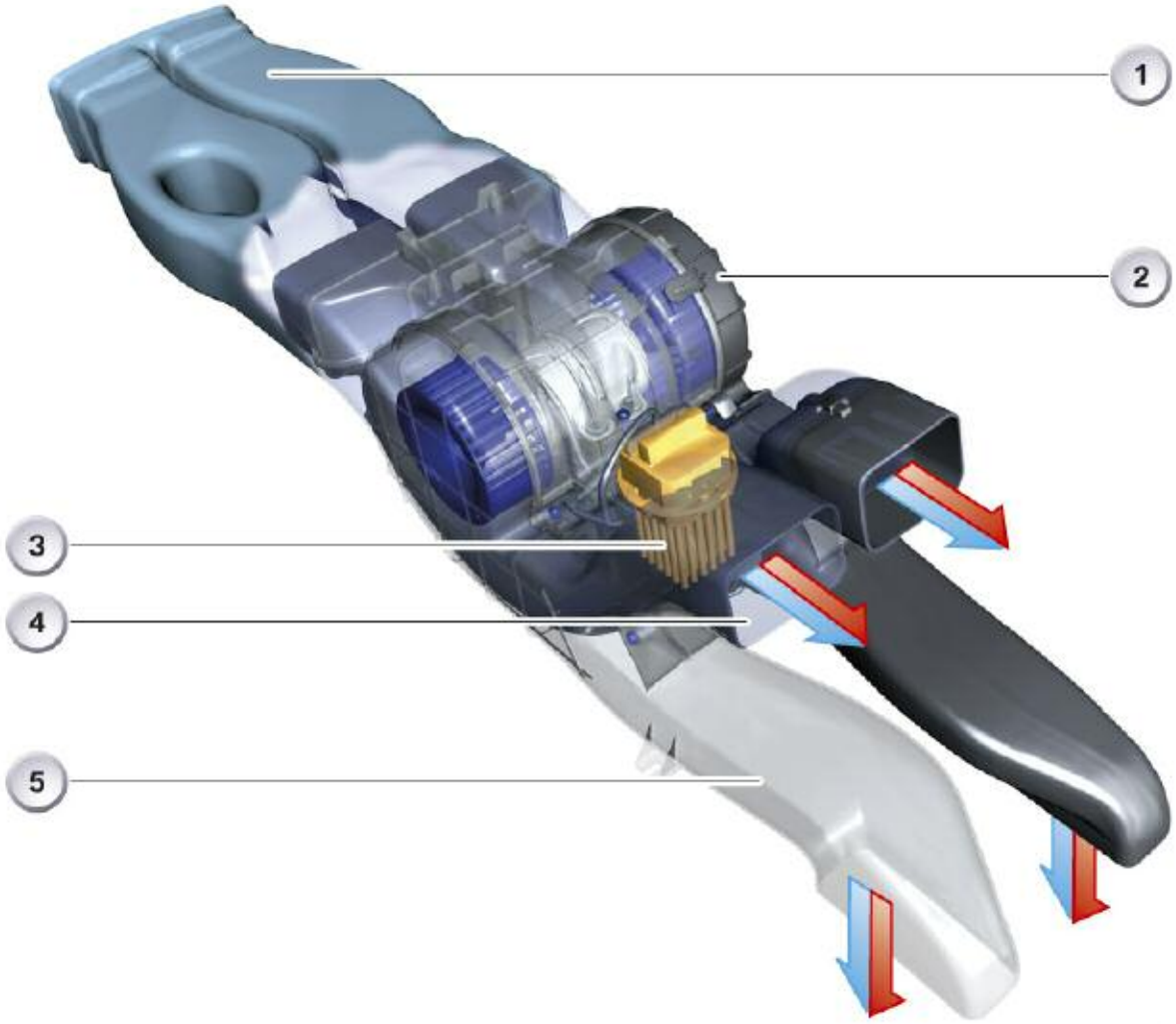

Index	Explanation	Index	Explanation
1	Left/right rear ventilation air duct	4	Center left/right rear ventilation outlet air ducts
2	FKA automatic rear air conditioning blower	5	Left/right B-pillar ventilation air duct
3	FKA blower final stage		

Note: The rear blower is actuated via a PWM signal from the FKA.

cardiagn.com

Rear Air Stratification Potentiometer

Index	Explanation	Index	Explanation
1	E70 FKA rear center ventilation outlet	3	Left/right rear air stratification potentiometer
2	Left/right rear ventilation temperature sensors	4	Left/right rear ventilation manual shut-off flap

Note: In order to stratify the air and therefore adjust the ventilation temperature in the rear, the FKA has two potentiometers (left/right) in the rear center ventilation outlet.

cardiagn.com

Rear Footwell PTC Heating Elements Left/Right

A PTC heating element is installed at the left and right in the rear footwell air channels for the second row of seats. The heating elements act as auxiliary comfort heaters and provide the occupants with a way of offsetting the rear temperature compared to the front, regardless of the heating situation in the front.

The heating elements are operated by the FKA via a PWM signal depending on the rear footwell outlet temperature and any output capability limitations.

The nominal rating of the PTC heating element is 300W with a voltage of 13V and air flow rate of 1 kg/min.

Heating/Ventilation for Third Row of Seats

The 3rd row of seats has its own optional heating and ventilation system. The blower is switched on and off using the button near the center air outlet. The air distribution at the ventilation air vents in the third row of seats is controlled using a knurled adjusting wheel with control flap. A PTC heating element is activated via the limit position switch operated by the knurled adjusting wheel.

The warm air is blown out via the lower ventilation air vents.

The heating can only be activated if the blower is switched on.

The control unit for heating and ventilating the 3rd row of seats is connected to the IHKA via the LIN bus and controls the heating element (output 300W) for heating the air in the footwell of the 3rd row of seats.

The output of the heating element is controlled depending on the interior temperature in three stages from 0 - 100% (< 20°C = 100%, > 20°C = 50%, > 30°C = 0% PTC output).

The DME (ECM) (by means of a CAN signal to the IHKA and to the HB3SR control unit via the LIN bus) can reduce the power of the heating element (power reduction of 50% or cut off) within the scope of power management.

cardiagn.com

HB3SR System General View

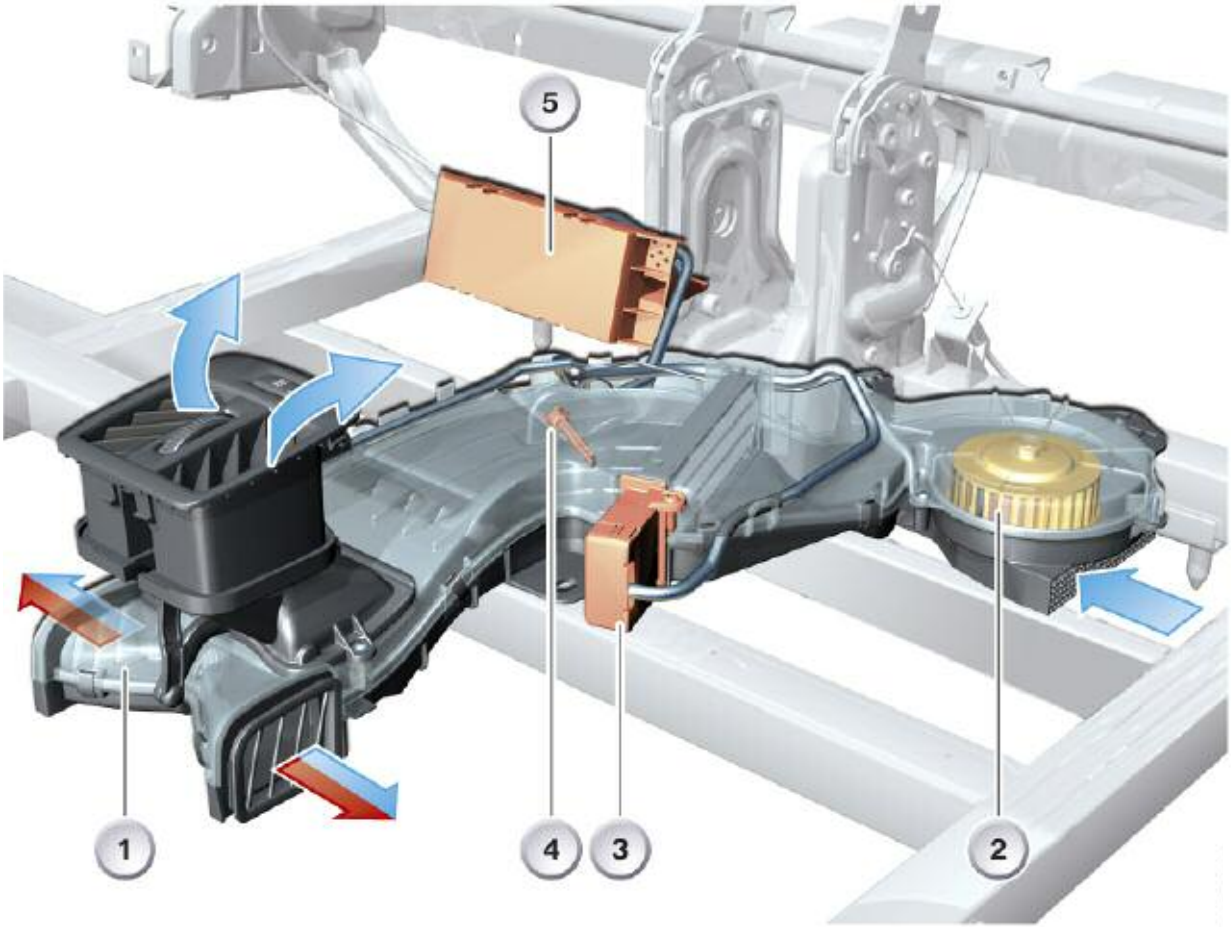

Index	Explanation	Index	Explanation
1	System unit for heating and ventilating the 3rd row of seats	4	Auxiliary heating temperature sensor
2	Ventilation blower and heating for 3rd row of seats, recirculated air intake	5	HB3SR control unit
3	PTC heating element		

cardiagn.com

Heating and Ventilating Unit the Third Row Seats

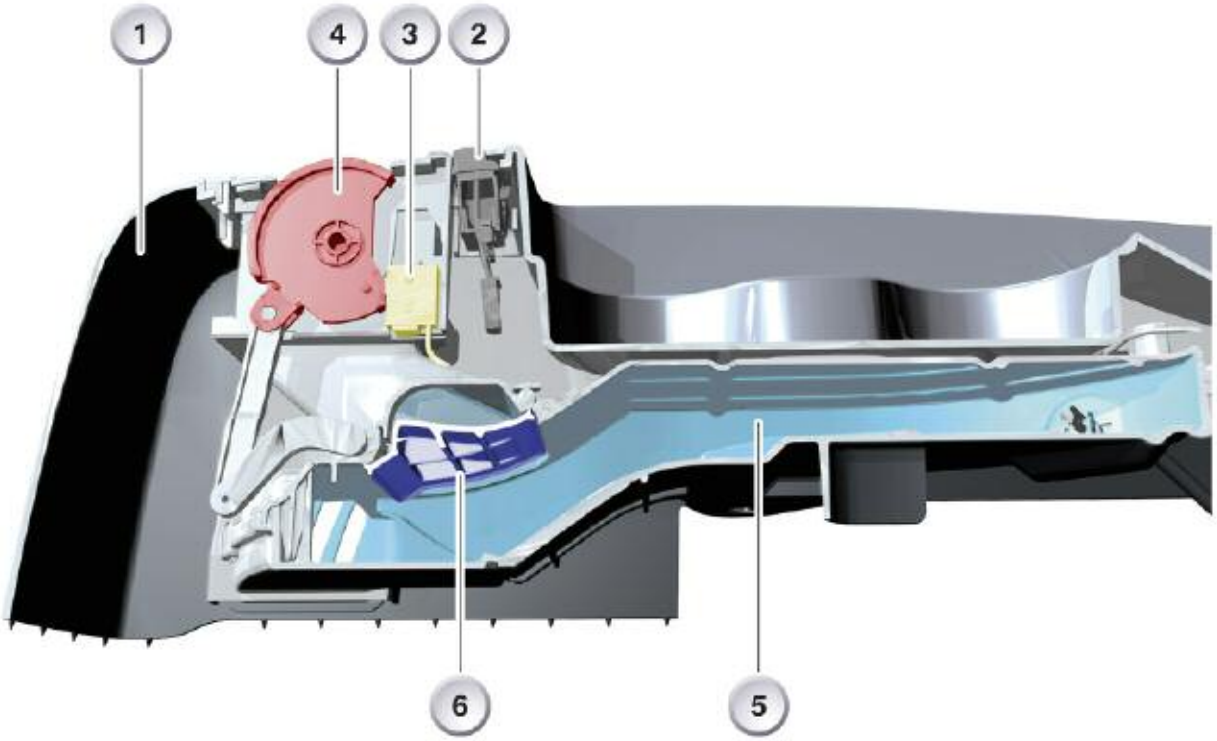

Index	Explanation	Index	Explanation
1	System unit for heating and ventilating the 3rd row of seats	4	Air distribution flap knurled adjusting wheel
2	Blower ON/OFF button	5	Air duct
3	Limit position switch for ON/OFF knurled adjusting wheel for PTC heating element	6	Lower warm air routing flap

cardiagn.com

Heating/Ventilation Control Unit for Third Row of Seats, Connector View

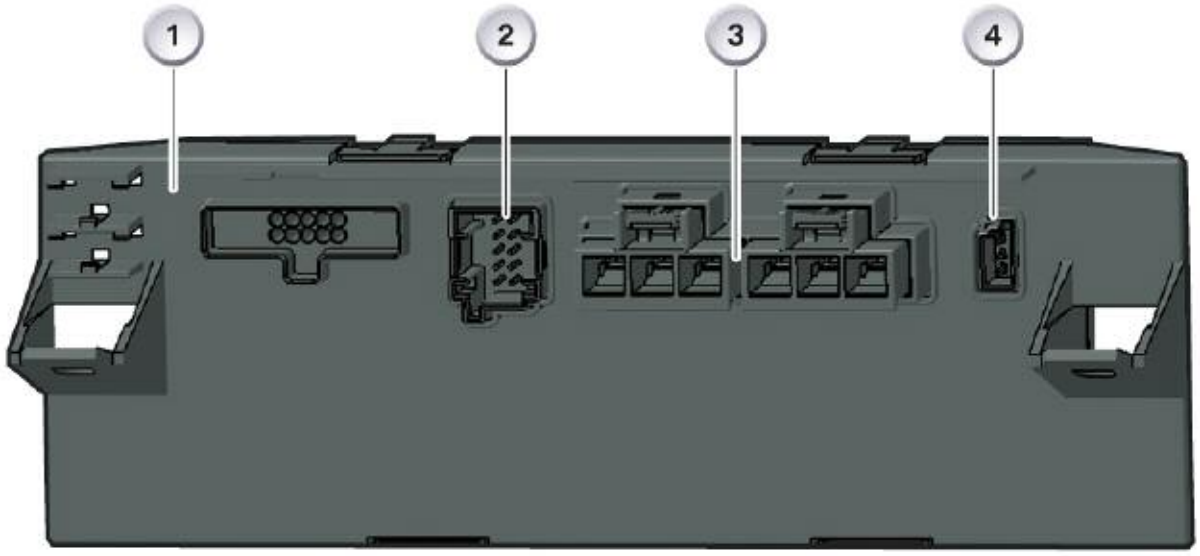

Index	Explanation	Index	Explanation
1	Heating and ventilation control unit for 3rd row of seats, HB3SR)	3	View of vehicle system wiring harness plug
2	View of sensor system/actuator system connector for 3rd row of seats	4	LIN bus connector view

cardiagn.com

Bus Network Components

Steering Wheel Heating

The steering wheel heating is integrated in the steering column switching center SZL.

In order to operate the steering wheel heating the IHKA transmits the switching of terminal 15 and terminal 50, the power down signal and the consumer power control signal to the SZL by means of a PWM signal.

Center Console Switch Cluster (SZM)

The IHKA acts as the interface between the SZM and the K-CAN.

The IHKA control units can read out the resistor coding of the SZM, determine which version of the SZM is installed and transfer these values via a diagnosis signal.

The IHKA versions must be able to provide a maximum total current of 185 mA to supply the SZM (search/function lighting and logic).

Electric Steering Column Adjustment (eLSV)

The steering column height and the distance between the steering wheel and the driver can be adjusted by actuating the eLSV in the IHKA and the drive block in the vicinity of the steering column in the E70.

The drive block has an electromagnetic changeover for selecting the height and distance adjustment coordinates. The steering column is adjusted by an electric motor. The steering wheel position and the permitted adjustment range are acquired using Hall sensors.

The diagnostics for the eLSV components are integrated in the IHKA control unit and must be selected via the IHKA control unit.

cardiagn.com

System Circuit Diagram- IHKA, 2-zone

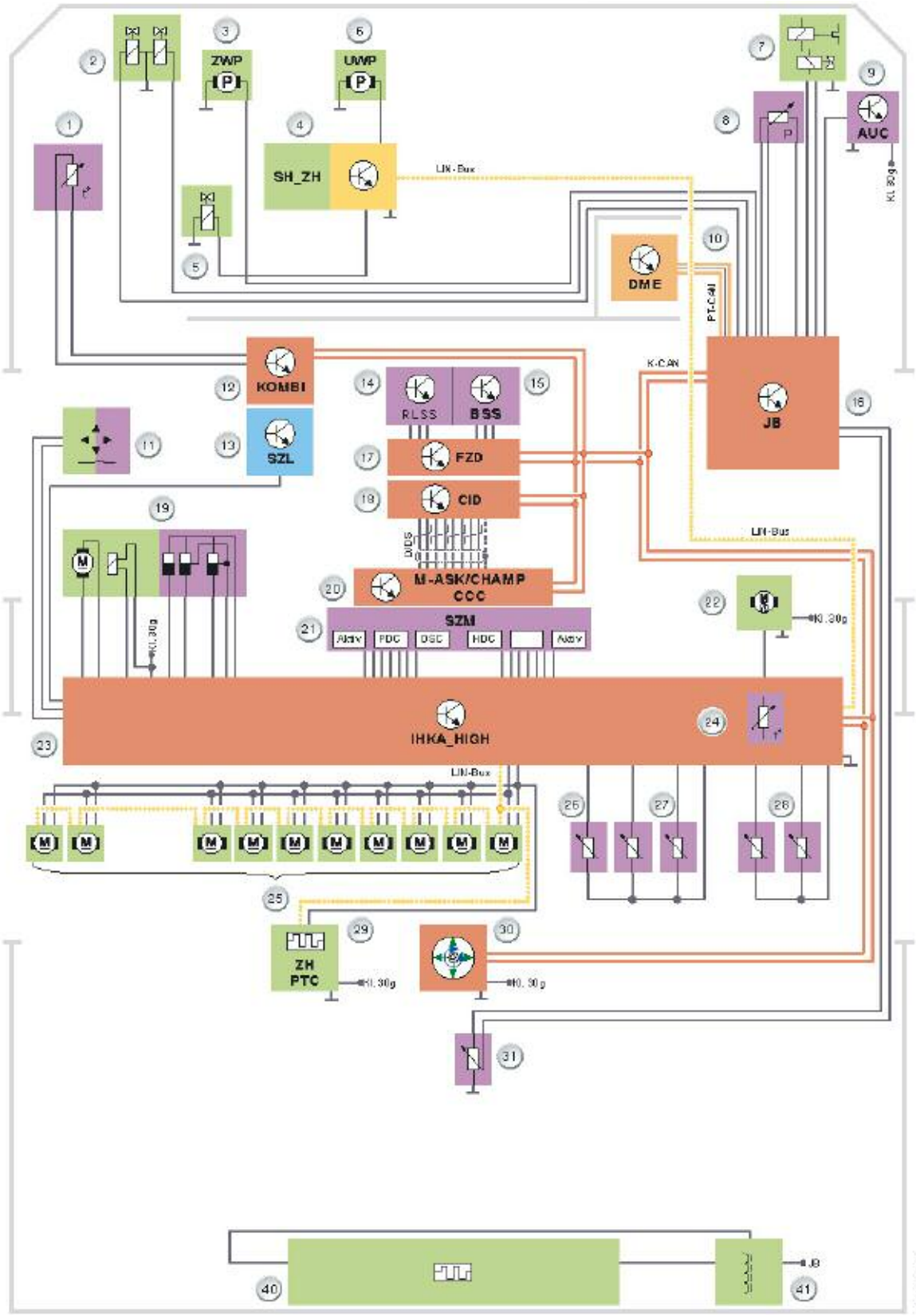

cardiagn.com

System Circuit Diagram- IHKA FKA, 4-zone

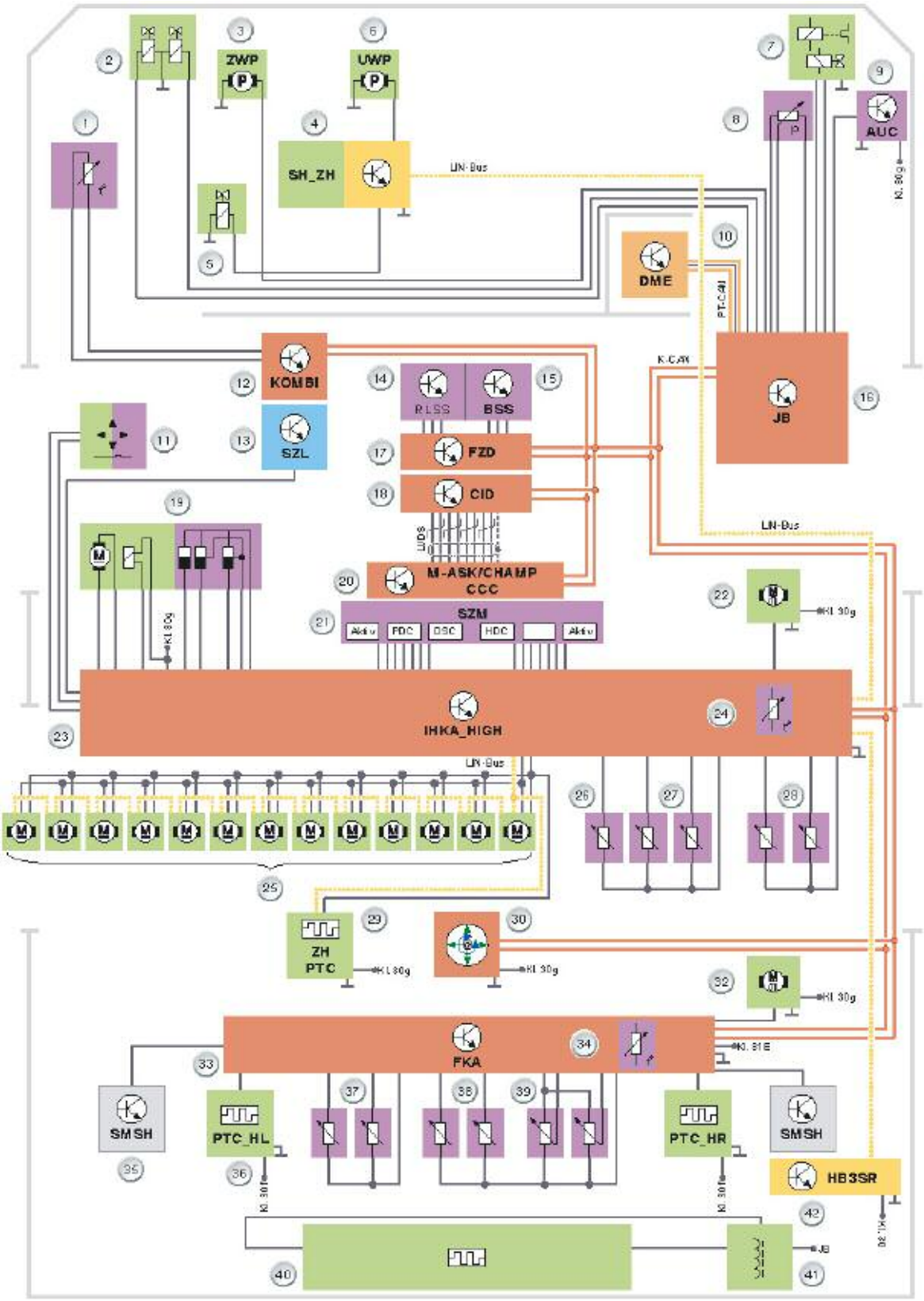

cardiagn.com

Legend for System Circuit Diagrams

Index	Explanation	Index	Explanation
1	Ambient temperature sensor	22	Heating/air conditioning system blower motor
2	Left/right heater valves to heater heat exchanger	23	IHKA control unit
3	Electric auxiliary water pump (omitted in SHZH option)	24	Front interior temperature sensor with forced ventilation
4	SHZH independent heater/auxiliary heater optionally installed (Not for US vehicles)	25	Actuator motors*
5	SHZH changeover valve optionally installed (Not for US vehicles)	26	Evaporator temperature sensor
6	SHZH circulating pump optionally installed (Not for US vehicles)	27	Heater core temperature sensor (one or two, left/right)
7	A/C compressor with solenoid coupling and external control valve	28	Center front ventilation temperature sensors (one or two, left/right)
8	Air conditioning system refrigerant circuit pressure sensor	29	Electric PTC auxiliary heater for vehicles with diesel engines (Not for US Vehicles)
9	AUC automatic recirculated air control sensor	30	I-drive controller
10	DME (ECM) engine control unit	31	Center rear ventilation stratification adjuster (IHKA without FKA)
11	Optional eLSV electric steering column adjustment switch	32	Rear automatic air conditioning blower motor
12	Instrument cluster ambient temperature signal	33	FKA rear automatic air conditioning operating and control unit
13	SZL steering column switching center, optionally in combination with LHZ steering wheel heating	34	Rear interior temperature sensor with forced ventilation
14	Rain/driving light solar sensor RLSS	35	Rear left/right seat heating seat module
15	BSS window misting sensor	36	Left/right rear footwell air duct PTC heating element
16	Junction box JB	37	Left/right rear footwell air duct temperature sensors
17	FZD roof function center	38	Center rear ventilation temperature sensors left/right
18	Central information display CID	39	Right/left rear center ventilation stratification adjuster
19	Electric steering column adjustment eLSV	40	Heated rear window HHS
20	M-ASK/CHAMP/CCC	41	Filter with blocking circuit
21	SZM center console switch cluster	42	HB3SR ventilation heater for 3rd row of seats, optional

cardiagn.com

Actuator Motors

	IHKA	IHKA with FKA
1	Defrost	X
2	Fresh air/recirculated air	X
3	Dynamic pressure compensation	X
4	Right/left front footwell	X
5	Right/left front air stratification,	X
6	Left/right front ventilation	X
7	Left front footwell	X
8	Left/right rear air stratification	X
9	Right front ventilation,	X
10	Right front air stratification	X
11	_	Left rear footwell
12	_	Right rear footwell,
13	_	Right rear air stratification/shut-off

cardiagn.com

Service Information

Diagnostics/Programming

All control units for the heating and air conditioning systems have diagnostic capability and are programmable. Information about diagnosis and programming can be found in the latest versions of DIS/TIS and Progman.

PIA

Heating and air conditioning personalization and individualization via the control units are carried out using four memory keys and a default user. The following range of functions is provided for individualization:

- Air conditioning automatic adjustment
- Air conditioning air distribution program
- Air conditioning AC
- Air conditioning temperature
- Air conditioning blower setting
- Air conditioning AUC.

Transport and Workshop Mode

The functionality of the workshop and transport mode provides the following deactivation functions via a diagnostic command (factory or service):

- Heated rear window
- Water pump, valves, compressor
- Steering wheel heating
- Independent ventilation
- Independent heating
- eLSV
- Residual heat function
- Seat ventilation
- Rear footwell PTC heating element
- Rear blower
- Rear seat heating (with FKA)
- PTC heating element and blower for 3rd row of seats.

cardiagn.com