AUDIO AND VISUAL SYSTEM

PARTS LOCATION

HATCHBACK
(5-Door Models):

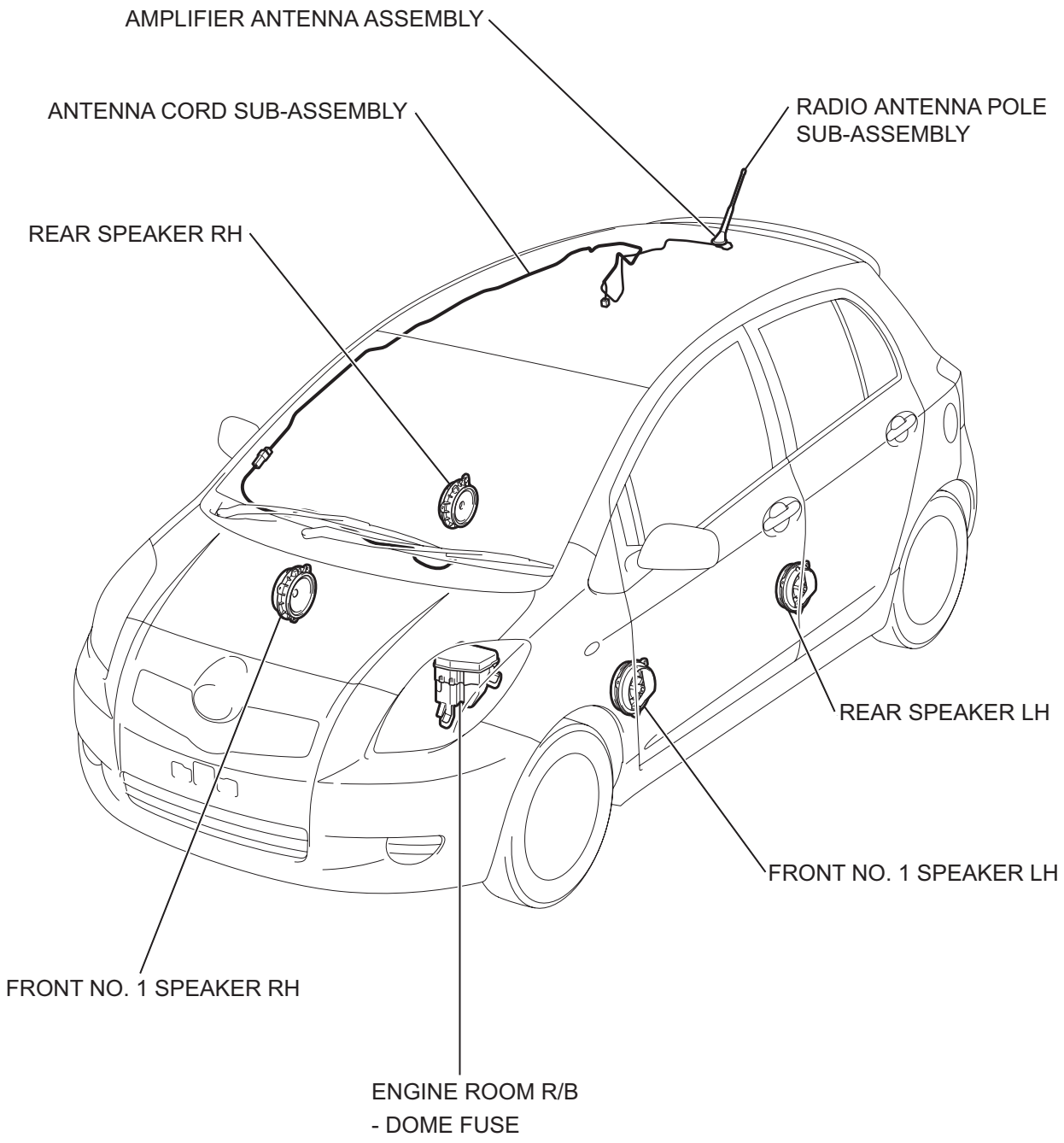

P

C117847E05

HATCHBACK
(3-Door Models):

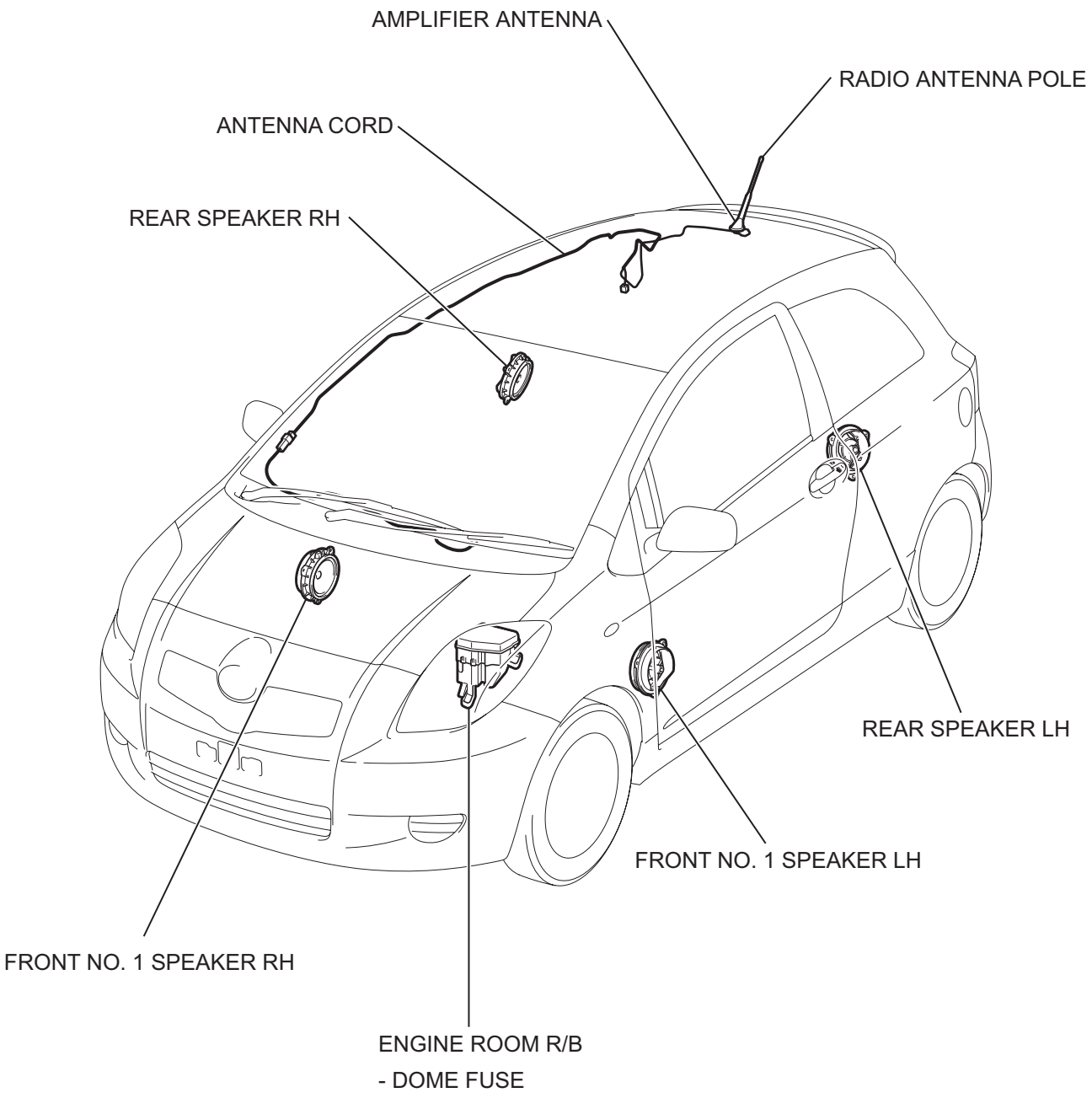

P

E118200E05

HATCHBACK:

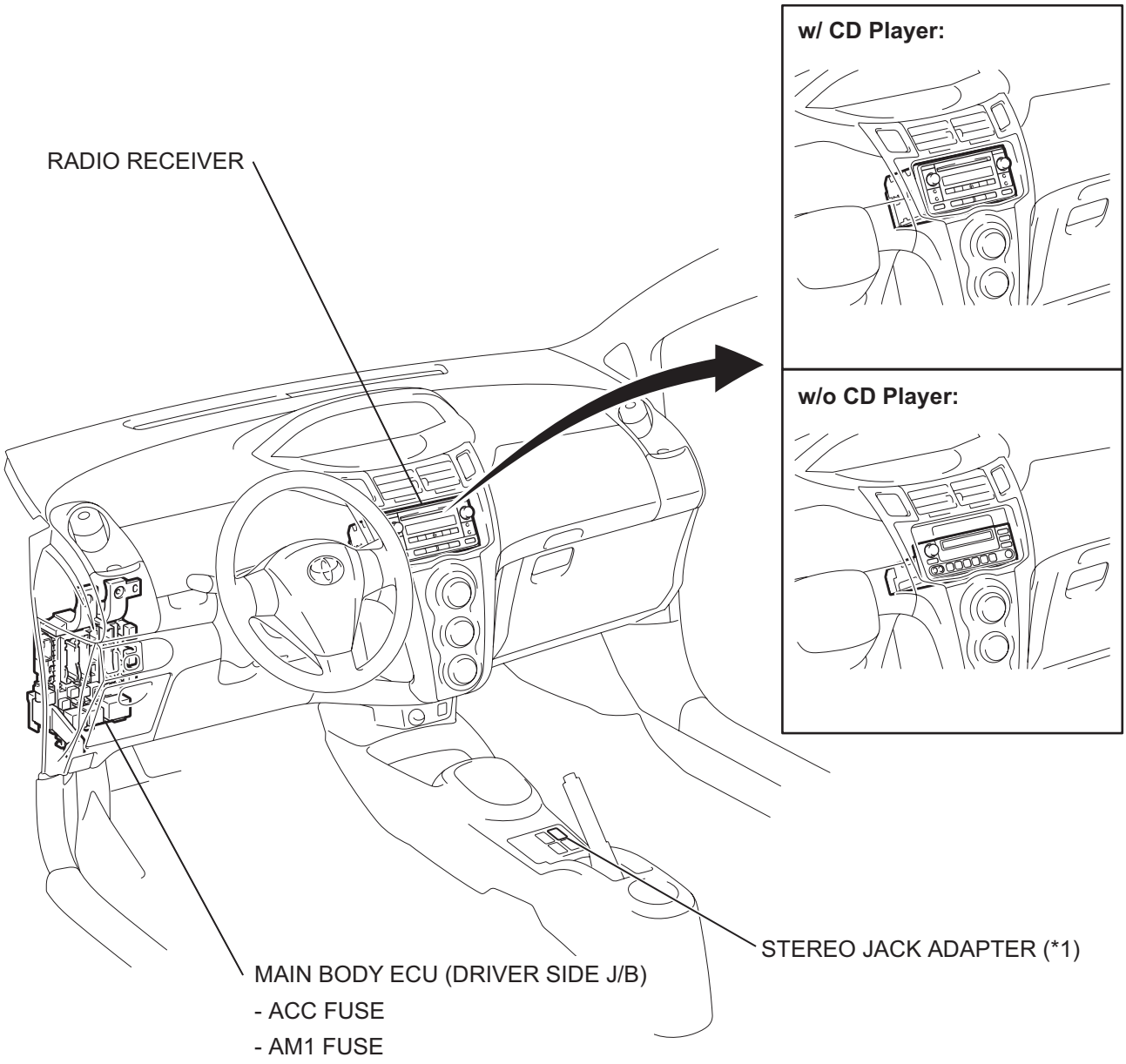

*1: w/ CD Player

P

C117846E03

SEDAN:

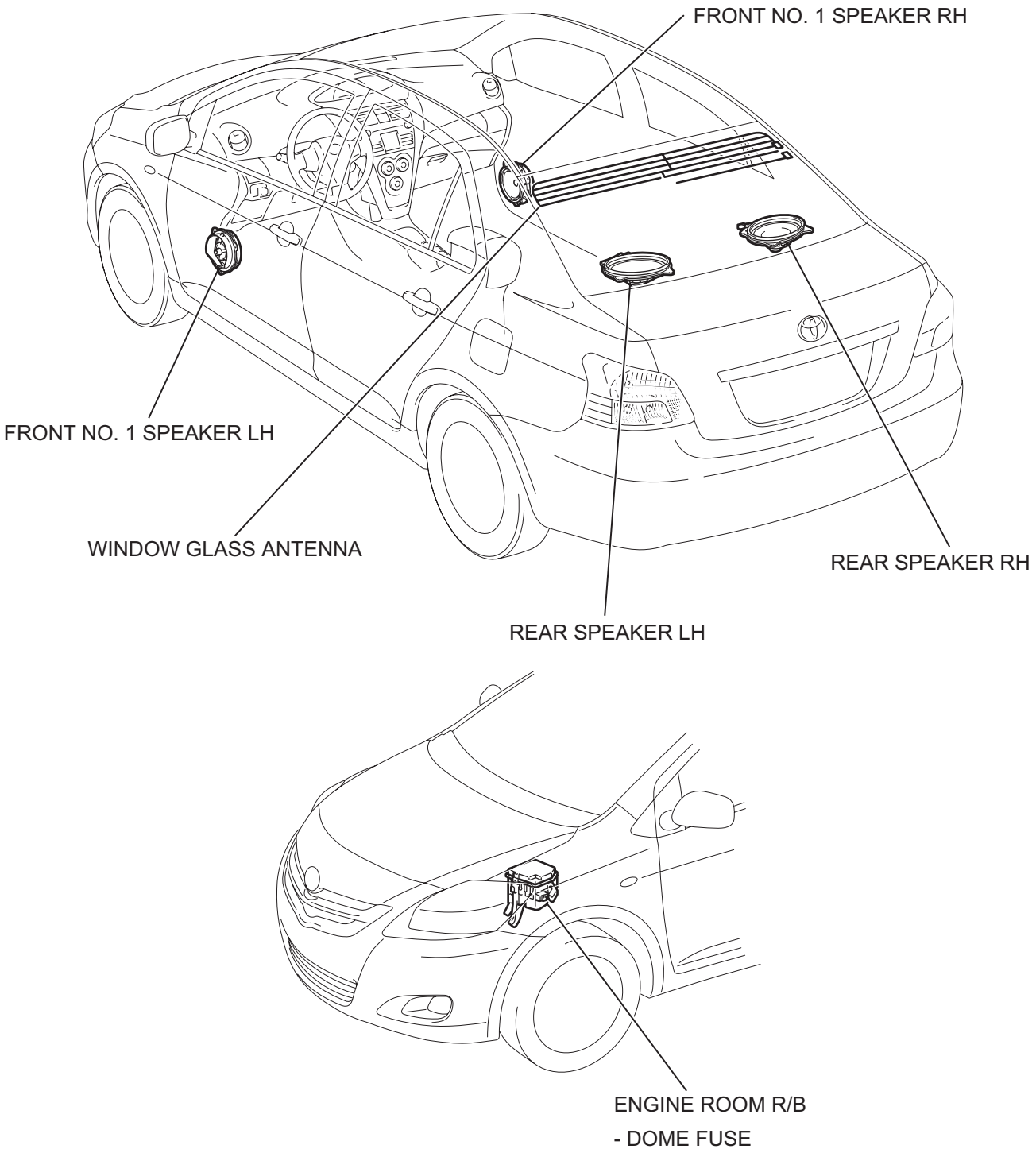

P

C138617E02

SEDAN:

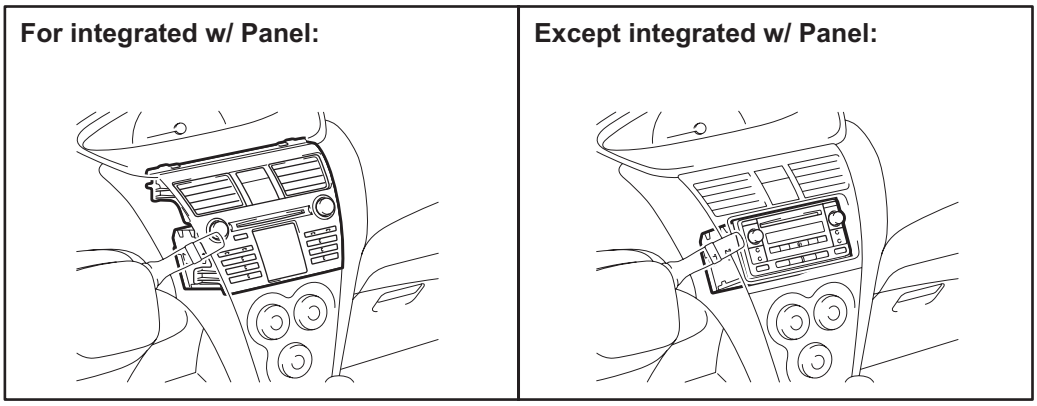

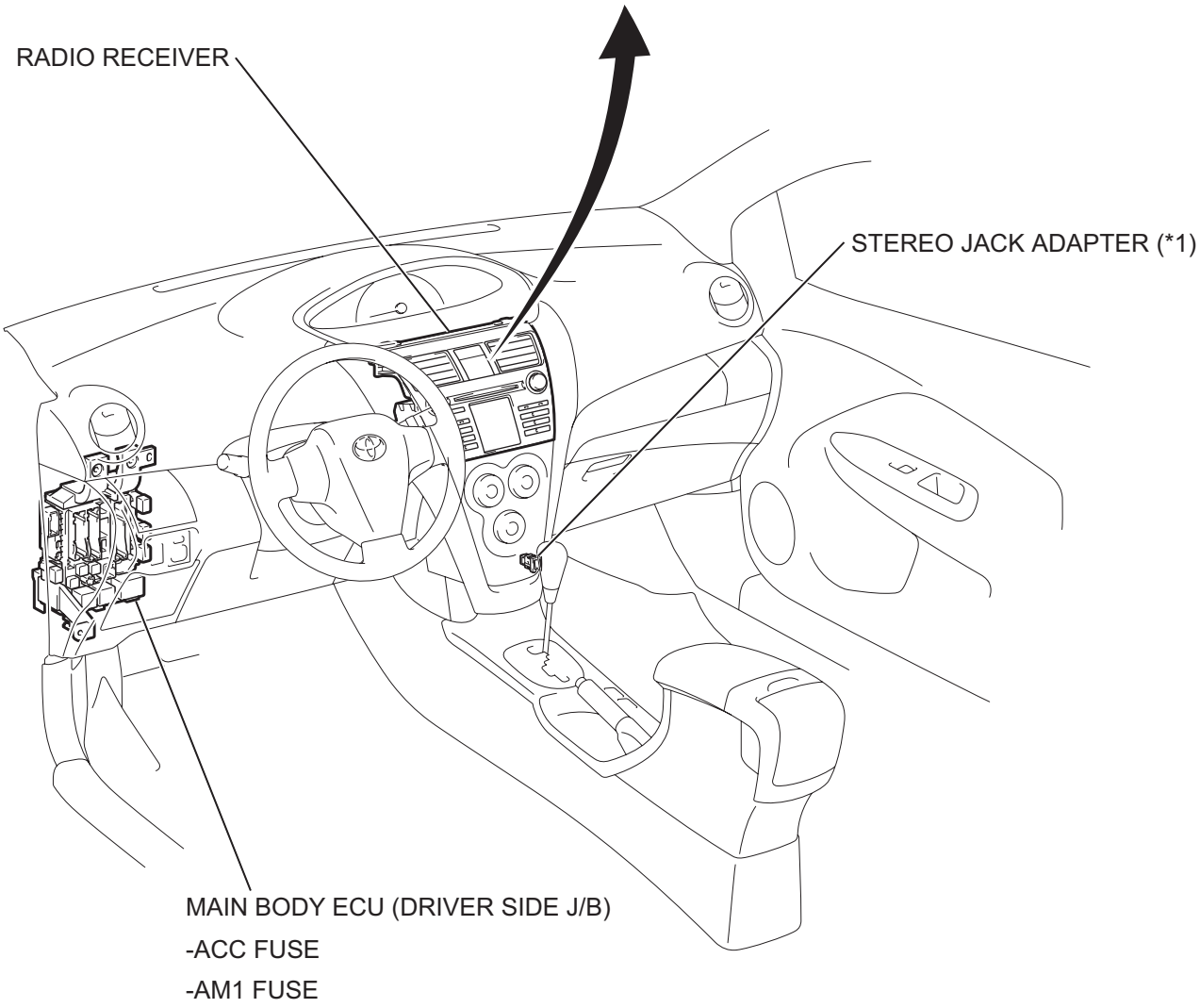

*1: w/ STEREO JACK ADAPTER

P

E132579E01

SYSTEM DIAGRAM

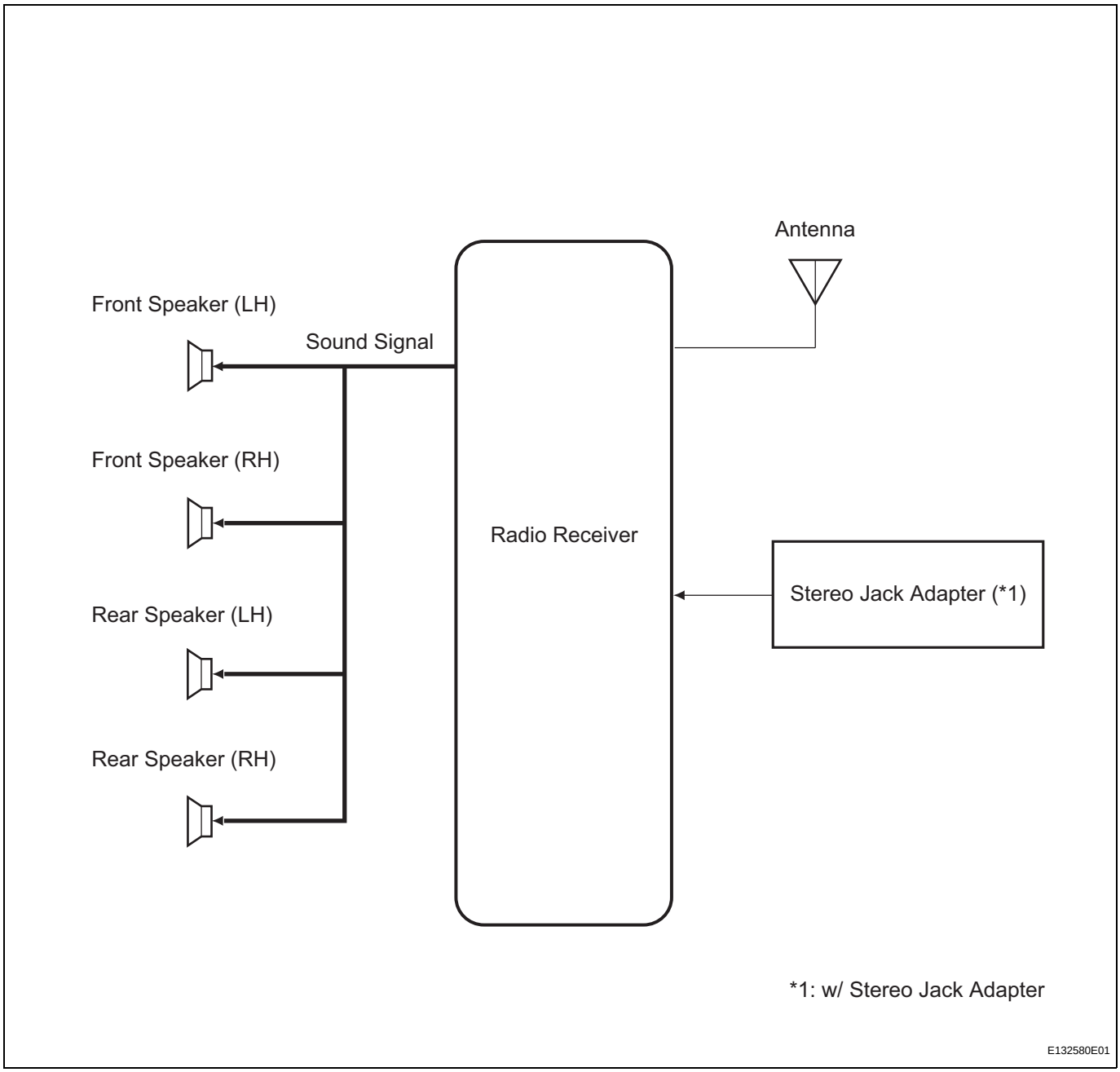

SYSTEM DESCRIPTION

CAUTION:
The CD player uses an invisible laser beam which could cause hazardous radiation exposure. Be sure to operate the player as instructed.

1. CD PLAYER OUTLINE

(a) A CD player uses a laser pickup to read digital signals recorded on CDs. By converting the digital signals to analog, music and other contents can be played.

CAUTION:
Do not look directly at the laser pickup because the CD player uses an invisible laser beam. Be sure to operate the player only as instructed.

NOTICE:
- **Do not disassemble any part of the CD player.**
- **Do not apply oil to the CD player.**
- **Do not insert anything but a CD into the CD player.**

(b) Usable CDs

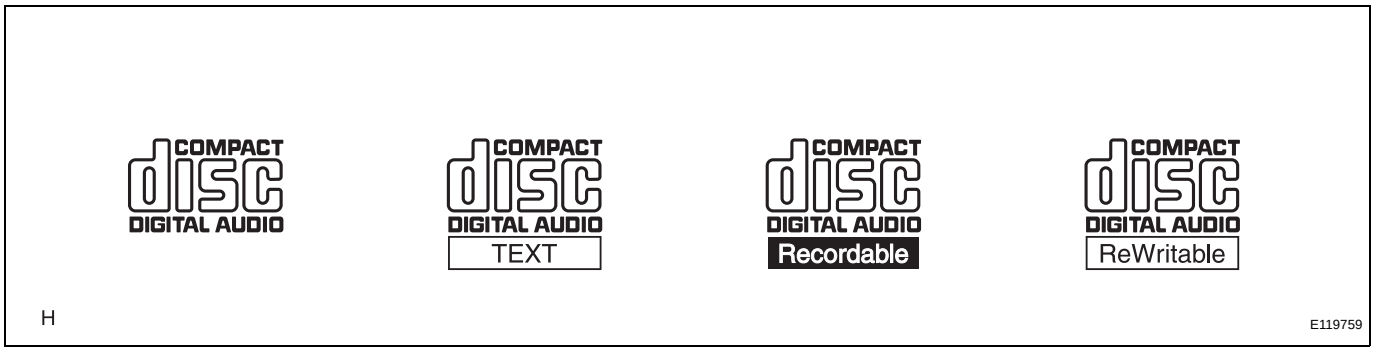

(c) Precautions for use of discs

NOTICE:
- **Copy-protected CDs cannot be played.**
- **Dual discs cannot be played. Playing dual discs may cause malfunctions of the CD player.**
- **CD-Rs and CD-RWs may not be played depending on the recording conditions or characteristics of the discs, or due to damage, dirt, or deterioration caused by leaving the discs in the cabin for a long time.**
- **Unfinalized CD-Rs and CD-RWs cannot be played.**
- **PAL or SECAM color television standard discs cannot be played. (Only NTSC discs can be played.)**
- **Keep the discs away from dirt. Be careful not to damage the discs or leave your fingerprints on them.**
- **Hold discs by the outer edge and center hole with the label side up.**

- **Leaving the disc exposed halfway out of the slot for a long time after pressing the disc eject button may cause deformation of the disc, making the disc unusable.**
- **If discs have adhesive tape, stickers, CDR labels, or any traces of such labels attached, the discs may not be ejected or player malfunctions may result.**
- **Keep the discs away from direct sunlight. (Exposure to direct sunlight may cause deformation of the disc, making the disc unusable.)**
- **Do not use odd-shaped CDs because these may cause player malfunctions.**
- **Do not use discs whose recording portion is transparent or translucent because they may not be inserted, ejected, or played normally.**

HINT:

- When it is cold or it is raining, if the windows mist up, mist and also dew may form in the player. In such a case, the CD may skip or the CD may stop in the middle of play. Ventilate or dehumidify the cabin for a while before using the player.
- The CD may skip if the player experiences strong vibrations when the vehicle is driven on rough road or similar uneven surface(s).

(d) Cleaning

NOTICE:

Do not use a lens cleaner because it may cause a malfunction in the pickup portion of the player.

(1) If dirt is on the disc surface, wipe it clean with a soft dry cloth such as an eyeglass cleaner for plastic lenses from the center to the outside in a radial direction.

NOTICE:

- **Pressing on the disc by hand or rubbing the disc with a hard cloth may scratch the disc surface.**
- **Use of solvent such as a record spray, antistatic agent, alcohol, benzine, and thinner, or a chemical cloth may cause damage to the disc, making the disc unusable.**

2. MP3/WMA OUTLINE

(a) Playable MP3 file standards

Compatible standard	MP3 (MPEG1 LAYER3, MPEG2 LSF LAYER 3)
Compatible sampling frequency	• MPEG1 LAYER3: 32, 44.1, 48 (kHz) • MPEG2 LSF LAYER3: 16, 22.05, 24 (kHz)
Compatible bit rate	• MPEG1 LAYER3: 64, 80, 96, 112, 128, 160, 192, 224, 256, 320 (kbps) • MPEG2 LSF LAYER3: 64, 80, 96, 112, 128, 160 (kbps) • Compatible with VBR
Compatible channel mode	Stereo, joint stereo, dual channel, monaural

(b) Playable WMA file standards

Compatible standard	WMA Ver. 7, 8, and 9
Compatible sampling frequency	32, 44.1, 48 (kHz)
Compatible bit rate	• Ver. 7, 8: CBR48, 64, 80, 96, 128, 160, 192 (kbps) • Ver. 9: CBR48, 64, 80, 96, 128, 160, 192, 256, 320 (kbps) • Compatible with playback of channel 2 only

(c) ID3 tags and WMA tags

(1) Additional textual information called ID3 tags can be input to MP3 files. Information such as song titles and artist names can be stored.
HINT:
This player is compatible with the ID3 tags of ID3 Ver. 1.0 and 1.1, and ID3 Ver. 2.2 and 2.3. (Number of characters complies with ID3 Ver. 1.0 and 1.1.)

(2) Additional textual information called WMA tags can be input to WMA files. Information such as song titles and artist names can be stored.

(d) Usable media

(1) Only CD-ROMs, CD-Rs (CD-Recordable), and CD-RWs (CD-ReWritable) can be used to play MP3/WMA files.
NOTICE:
- **CD-Rs and CD-RWs are more easily affected by a hot and humid environment than discs used for normal audio CDs. For this reason, some CD-Rs and CD-RWs may not be played.**
- **If there are fingerprints or scratches on the disc, the disc may not be played or the CD may skip.**
- **Some CD-Rs and CD-RWs deteriorate if they are left in the cabin for a long time.**
- **Keep CD-Rs and CD-RWs in a storage case that is impenetrable to light.**

(e) Usable media format

(1) Usable media format

Disc format	CD-ROM Mode 1, CD-ROM XA Mode 2 Form1
File format	ISO9660 Level 1 and Level 2 (Juliet and Romeo)

HINT:
- As for MP3/WMA files written in any format other than those above, the contents of the files may not be played normally or the file names or folder names may not be displayed correctly.
- This player is compatible with multi-session discs and can play CD-Rs and CD-RWs on which MP3/WMA files are added. However, only the first session can be played.
- Discs whose first session includes both music data and MP3 or WMA format data cannot be played.

(2) Standard and restrictions

Maximum directory levels	8 levels
Maximum number of characters for a folder name/file name	32 characters
Maximum number of folders	192 (Including empty folders, route folders, and folders that do not contain MP3/WMA files)
Maximum number of files in a disc	255 (Including non-MP3/WMA files)

(f) File names

(1) Only files with an extension of ".mp3" or ".wma" can be recognized and played as MP3 or WMA files.

(2) Save MP3 or WMA files with an extension of ".mp3" or ".wma".

NOTICE:

If saving non-MP3 or non-WMA files with an extension of ".mp3" or ".wma", those files are wrongly recognized as MP3 or WMA files and played. A loud noise may occur and damage to the speakers may result.

HOW TO PROCEED WITH TROUBLESHOOTING

HINT:
In accordance with the following procedures, troubleshoot the audio and visual system.

1 VEHICLE BROUGHT TO WORKSHOP

NEXT

2 INSPECT BATTERY VOLTAGE

Standard voltage:
11 to 14 V
If the voltage is below 11 V, recharge or replace the battery before proceeding.

NEXT

3 BASIC INSPECTION

(a) Turn the ignition switch to ACC.
(b) Check whether the display appears on the radio receiver.

Result	Proceed to
Display appears	A
Display does not appear	B

B → **PROCEED TO PROBLEM SYMPTOMS TABLE**

A

4 PROBLEM SYMPTOMS TABLE

Result	Proceed to
Fault not listed in problem symptoms table	A
Fault listed in problem symptoms table	B

B → **Go to step 6**

A

5 OVERALL ANALYSIS AND TROUBLESHOOTING

(a) Terminals of ECU (See page AV-14)
(b) Inspection (See page AV-159, AV-172)

NEXT

6	**ADJUST, REPAIR OR REPLACE**

NEXT

7	**CONFIRMATION TEST**

NEXT

END

IDENTIFICATION OF NOISE SOURCE

1. Radio Description

(a) Radio frequency band

(1) Radio broadcasts use the radio frequency bands shown in the table below.

Frequency	30 kHz	300 kHz	3 MHz	30 MHz	300 MHz
Designation	LF	MF	HF	VHF	
Radio Wave		AM		FM	
Modulation	Amplitude modulation			Frequency modulation	

LF: Low frequency MF: Medium frequency HF: High frequency VHF: Very high frequency

E108734E02

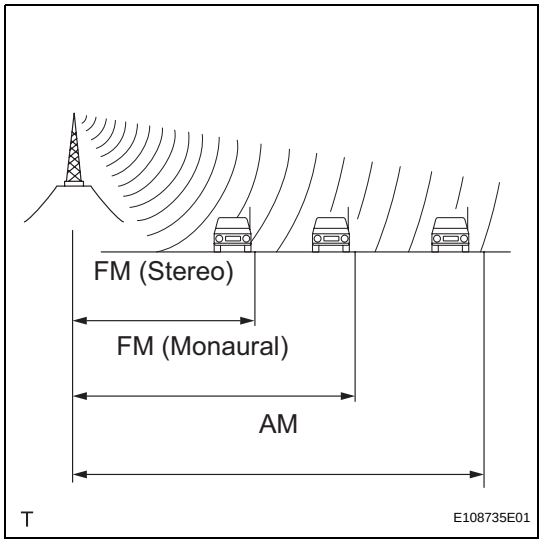

(b) Service area

(1) The service areas of AM and FM broadcasts are vastly different. Sometimes an AM broadcast can be received very clearly but an FM stereo cannot. FM stereo has the smallest service area, and is prone to pick up static and other types of interference such as noise.

(c) Radio reception problems

HINT:

In addition to static, other problems such as "phasing", "multipath", and "fade out" exist. These problems are not caused by electrical noise, but by the radio signal propagation method itself.

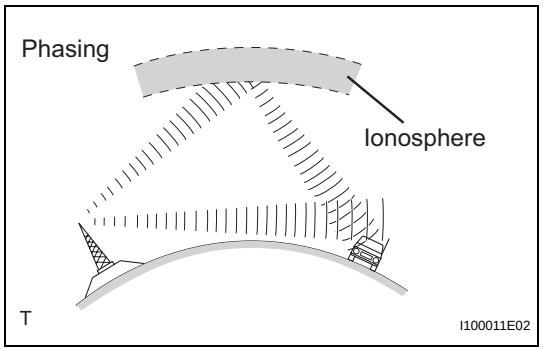

(1) Phasing

AM broadcasts are susceptible to electrical interference and another kind of interference called phasing. Occurring only at night, phasing is the interference created when a vehicle receives 2 radio wave signals from the same transmitter. One signal is reflected off the ionosphere and the other signal is received directly from the transmitter.

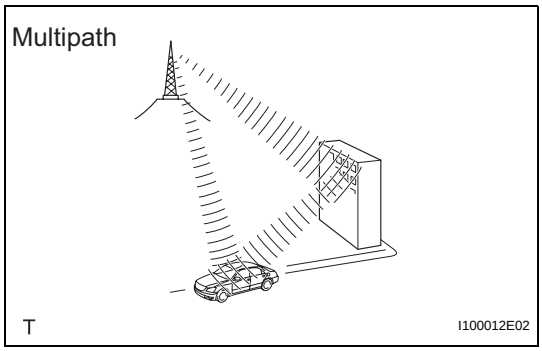

(2) Multipath
Multipath is a type of interference created when a vehicle receives 2 radio wave signals from the same transmitter. One signal is reflected off buildings or mountains and the other signal is received directly from the transmitter.

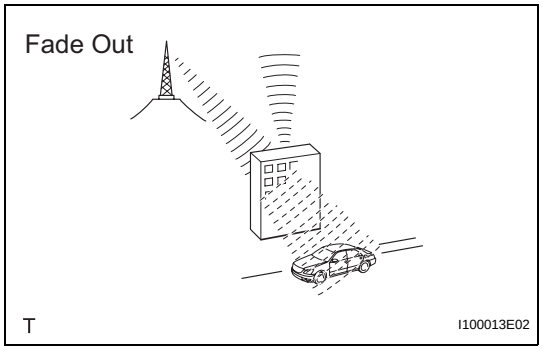

(3) Fade out
Fade out is caused by objects (buildings, mountains, and other such large obstacles) that deflect away part of a signal, resulting in a weaker signal when the object is between the transmitter and vehicle. High frequency radio waves, such as FM broadcasts, are easily deflected by obstructions. Low frequency radio waves, such as AM broadcasts, are much more difficult to deflect.

(d) Noise problem
Technicians must have a clear understanding about each customer's noise complaint. Use the following table to diagnose noise problems.

Radio Frequency	Noise Occurrence Condition	Presumable Cause
AM	Noise occurs in specific area	Foreign noise
AM	Noise occurs when listening to an intermittent broadcast	An identical program transmitted from multiple towers can cause noise where the signals overlap
AM	Noise occurs only at night	Music beat from a distant broadcast
FM	Noise occurs while driving in a specified area	Multipath or phasing noise resulting from a change in FM frequency

HINT:
If the noise does not match the examples above, refer to the descriptions about phasing and multipath.

PROBLEM SYMPTOMS TABLE

HINT:
Use the table below to determine the cause of the problem symptom. The potential causes of the symptom are listed in order of probability in the "Suspected Area" column of the table. Check each symptom by checking the suspected areas in the order they are listed. Replace parts as necessary.

Audio Function

Symptom	Suspected area	See page
Noise occurs	1. Proceed to "Noise Occurs"	AV-16
	2. Radio Receiver	-
Pressing power switch does not turn on system	1. Proceed to "Pressing Power Switch does not Turn on System"	AV-17
	2. Proceed to "Radio Receiver Power Source Circuit"	AV-33
	3. Radio Receiver	-
No sound can be heard from speakers	1. Proceed to "No Sound can be Heard from Speakers"	AV-18
	2. Proceed to "Speaker Circuit"	AV-28
	3. Proceed to "Radio Receiver Power Source Circuit"	AV-33
	4. Radio Receiver	-
Sound quality is bad only when CD is played (volume is too low)	1. Proceed to "Sound Quality is Bad Only when CD is played (Volume is too low)"	AV-19
	2. Proceed to "Speaker Circuit"	AV-28
	3. Radio Receiver	-
CD cannot be ejected	1. Proceed to "CD cannot be ejected"	AV-20
	2. Proceed to "Radio Receiver Power Source Circuit"	AV-33
	3. Radio Receiver	-
CD cannot be inserted or CD is ejected right after insertion	1. Proceed to "CD cannot be Inserted or is Ejected Right After Insertion"	AV-21
	2. Proceed to "Radio Receiver Power Source Circuit"	AV-33
	3. Radio Receiver	-
CD sound skips	1. Proceed to "CD Sound Skips"	AV-23
	2. Radio Receiver	-
Radio broadcast cannot be received (bad reception)	1. Proceed to "Radio Broadcast cannot be Received (Bad Reception)"	AV-25
Poor sound quality in all modes (low volume)	1. Proceed to "Poor Sound Quality in All Modes (Low Volume)"	AV-27
	2. Proceed to "Speaker Circuit"	AV-28
	3. Radio Receiver	-
External device sound cannot be heard or sound quality is bad (stereo jack is used)	1. Proceed to "Sound Signal Circuit between Radio Receiver and Stereo Jack Adapter"	AV-31
	2. Radio Receiver	-

TERMINALS OF ECU

1. CHECK RADIO RECEIVER

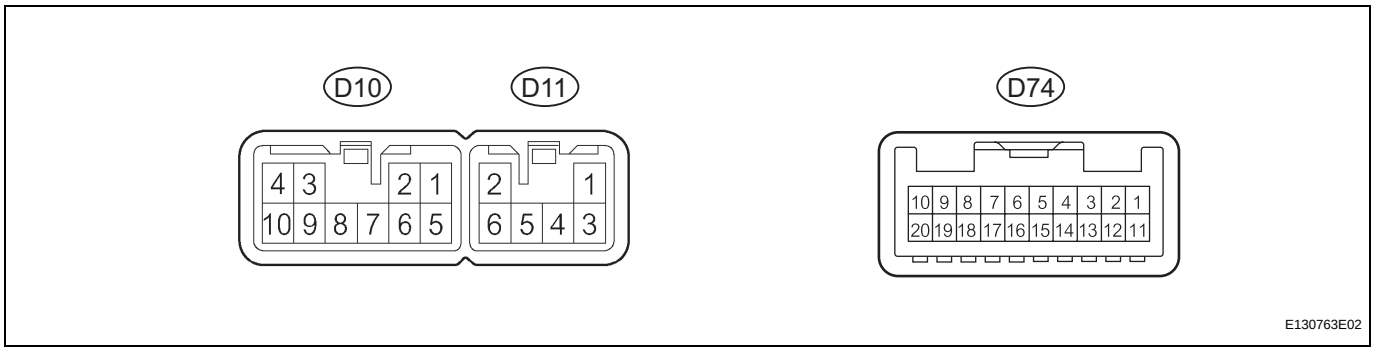

(a) Disconnect the D10 receiver connector.
(b) Measure the resistance and voltage of the wire harness side connector.

Standard:

Symbols (Terminal No.)	Wiring Color	Terminal Description	Condition	Specified Condition
GND (D10-7) - Body ground	W-B - Body ground	Ground	Always	Below 1 Ω
ACC (D10-3) - GND (D10-7)	GR - W-B	ACC power supply	Ignition switch ACC	11 to 14 V
B (D10-4) - GND (D10-7)	L - W-B	Battery power supply	Always	11 to 14 V

AV

HINT:
If the results are not as specified, there may be a malfunction in the wire harness.

(c) Reconnect the D10 receiver connector.
(d) Measure the voltage and resistance of the connector.

Standard:

Symbols (Terminal No.)	Wiring Color	Terminal Description	Condition	Specified Condition
FR+ (D10-1) - GND (D10-7)	GR - W-B	Sound signals (front right)	Audio system operating	Waveform synchronized with sound output
FL+ (D10-2) - GND (D10-7)	P - W-B	Sound signals (front left)	Audio system operating	Waveform synchronized with sound output
FR- (D10-5) - GND (D10-7)	Y - W-B	Sound signals (front right)	Audio system operating	Waveform synchronized with sound output
FL- (D10-6) - GND (D10-7)	V - W-B	Sound signals (front left)	Audio system operating	Waveform synchronized with sound output
RR+ (D11-1) - GND (D10-7)	R - W-B	Sound signals (rear right)	Audio system operating	Waveform synchronized with sound output
RL+ (D11-2) - GND (D10-7)	B - W-B	Sound signals (rear left)	Audio system operating	Waveform synchronized with sound output
RR- (D11-3) - GND (D10-7)	W - W-B	Sound signals (rear right)	Audio system operating	Waveform synchronized with sound output
RL- (D11-6) - GND (D10-7)	Y - W-B	Sound signals (rear left)	Audio system operating	Waveform synchronized with sound output
ANT (D10-8) - GND (D10-7)	B - W-B	Power source of antenna	Radio switch ON (AM or FM)	11 to 14 V
ARI (D74-15) - GND (D10-7)	R - W-B	Sound signal (Right)	External device playing (When stereo jack adapter used)	Waveform synchronized with sound output
ASGN (D74-16) GND (D10-7)	(Shielded) - W-B	Ground (Shielded)	Always	Below 1 Ω

Symbols (Terminal No.)	Wiring Color	Terminal Description	Condition	Specified Condition
ALI (D74-17) - GND (D10-7)	G - W-B	Sound signal (Left)	External device playing (When stereo jack adapter used)	Waveform synchronized with sound output
AUXI (D74-19) - GND (D10-7)	R - W-B	External device connection detection signal	External device connected	Below 1 Ω
SPD (D74-3)	W - W-B	Speed signal	Ignition switch ON, drive wheels turned slowly	Pulse generation

HINT:
If the results are not as specified, there may be a malfunction in the wire harness.

Noise Occurs

INSPECTION PROCEDURE

1 CHECK SPEAKER INSTALLATION

(a) Check that each speaker is securely installed.
OK:
Speakers are installed securely.

HINT:
The radio has a noise prevention function to reduce noise when listening to the radio. If severe noise occurs, check whether the ground at the antenna mounting base and the noise prevention unit are installed and wired correctly.

Condition in Which Noise Occurs	Noise Type
Increases when accelerator pedal is depressed, and stops immediately when engine is stopped	Generator noise
When A/C or heater is operating	Blower motor noise
• When vehicle is rapidly accelerated on unpaved road • When ignition switch is ON	Fuel pump noise
• When horn switch is pressed and released • When horn switch is pressed and held down	Horn noise
Occurs faintly when engine is running, and stops immediately when engine is stopped	Ignition noise
When turn signal is operating	Flasher noise
When window washer is operating	Washer noise
When engine is running, and continues even when engine is stopped	Engine coolant temperature noise
When wipers are operating	Wiper noise
When brake pedal is depressed	Stop light switch noise
Other than above	Static electricity on vehicle

HINT:
- Use the table above to identify the part that is causing the noise. Check the noise filter on the part.
- To save time and avoid a misdiagnosis, first make sure that the noise is not originating from outside the vehicle.
- Troubleshoot noise problems in order of loudness, starting with the loudest noise.
- Setting the radio to a frequency that receives no signal may make recognition of the noise problem easier.

NG → **INSTALL SPEAKER PROPERLY**

OK

IDENTIFY NOISE SOURCE

Pressing Power Switch does not Turn on System

INSPECTION PROCEDURE

1	CHECK WHETHER RAPID TEMPERATURE CHANGE OCCURRED IN CABIN

(a) Check whether or not a rapid temperature change occurred in the cabin.
OK:
Rapid temperature change occurred.
HINT:
Rapid temperature changes create condensation inside the radio receiver, which may cause a short circuit.

NG → **REPLACE RADIO RECEIVER**

OK

PROCEED TO NEXT CIRCUIT INSPECTION SHOWN IN PROBLEM SYMPTOMS TABLE

No Sound can be Heard from Speakers

INSPECTION PROCEDURE

1	CHECK RADIO RECEIVER (VOLUME AND MUTE SWITCH)

(a) Check the radio receiver setting.
  (1) Check that the volume is not set to minimum.
  (2) Check that MUTE is OFF.
  OK:
  Malfunction disappears.

NG → **PROCEED TO NEXT CIRCUIT INSPECTION SHOWN IN PROBLEM SYMPTOMS TABLE**

OK

END

Sound Quality is Bad Only when CD is Played (Volume is Too Low)

INSPECTION PROCEDURE

1	OPERATION USING ANOTHER CD

(a) Replace the CD with a normal one and check if the same problem occurs again.
OK:
Malfunction disappears.

NG → **PROCEED TO NEXT CIRCUIT INSPECTION SHOWN IN PROBLEM SYMPTOMS TABLE**

OK

CD IS FAULTY

CD cannot be Ejected

INSPECTION PROCEDURE

1	CHECK OPERATION

(a) Press the CD EJECT switch of the radio receiver for 2 seconds or more to check whether the CD can be ejected.
OK:
CD is ejected.

NG → **REPLACE RADIO RECEIVER**

OK

2	OPERATION USING ANOTHER CD

(a) Replace the CD with a normal one and check that the CD can be ejected.
OK:
CD is ejected.

NG → **REPLACE RADIO RECEIVER**

OK

CD IS FAULTY

CD cannot be Inserted or is Ejected Right After Insertion

INSPECTION PROCEDURE

1 CHECK CD

(a) Make sure that the CD is a normal audio CD, and that it is not deformed, flawed, stained, burred or otherwise defective.
OK:
Normal audio CD.
HINT:
Translucent or uniquely-shaped CDs cannot be played.

NG → **CD IS FAULTY**

OK

2 CHECK THAT CD HAS BEEN INSERTED PROPERLY

(a) Check whether or not the CD was inserted upside down.
OK:
CD was properly inserted.

NG → **INSERT CD PROPERLY**

OK

3 CLEAN CD

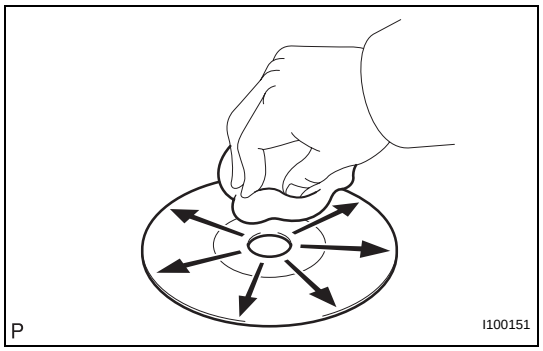

(a) Clean the disc by wiping the CD's dataside radially with a soft cloth.
OK:
Malfunction disappears.
NOTICE:
Do not use a conventional record cleaner or anti-static preservative.

OK → **CD WAS DIRTY**

NG

4 REPLACE CD

(a) Replace the CD with a normal one and check if the same problem occurs again.
OK:
Malfunction disappears.

NG → **REPLACE RADIO RECEIVER**

AV

OK

CD IS FAULTY

CD Sound Skips

INSPECTION PROCEDURE

HINT:
The sound may skip when driving on an unpaved road.

1 CLEAN CD

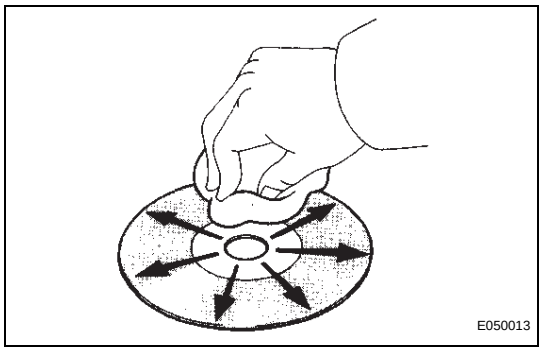

(a) If the disc is dirty, clean the disc by wiping the CD's dataside radially with a soft cloth.
OK:
Malfunction disappears.
NOTICE:
Do not use a conventional record cleaner or anti-static preservative.

OK → **CD WAS DIRTY**

NG

2 OPERATION USING ANOTHER CD

(a) Replace the CD with a normal one and check if the same problem occurs again.
OK:
Malfunction disappears.

OK → **CD IS FAULTY**

NG

3 CHECK RADIO RECEIVER INSTALLATION

(a) Check the installation condition of the radio receiver.
OK:
Installed properly.

NG → **INSTALL RADIO RECEIVER PROPERLY**

OK

4 CHECK WHETHER RAPID TEMPERATURE CHANGE OCCURRED IN CABIN

(a) Check whether or not a rapid temperature change occurred in the cabin.
OK:
Rapid temperature change occurred.
HINT:
Rapid temperature changes create condensation inside the CD player, which may prevent CDs from being played.

NG → **REPLACE RADIO RECEIVER**

OK

CONDENSATION DUE TO TEMPERATURE CHANGE (LET IT SIT FOR A WHILE BEFORE USING)

Radio Broadcast cannot be Received (Bad Reception)

INSPECTION PROCEDURE

1	CHECK WHETHER RAPID TEMPERATURE CHANGE OCCURRED IN CABIN

(a) Check whether the radio auto-search functions properly.
(1) Tune the radio using the auto-search function and check that it operates normally.
OK:
The radio auto-search functions properly.

OK → **END**

NG

2	CHECK OPTIONAL COMPONENTS

(a) Check whether any optional components, such as telephone antenna, are installed.
OK:
Optional component(s) installed.

OK → **EFFECT FROM OPTIONAL COMPONENTS**

NG

3	CHECK ANTENNA FOR NOISE PRODUCTION

(a) With the ignition switch on (ACC), turn on the radio and select the AM mode.
(b) Place the tip of a screwdriver on the antenna and check that noise is heard from the speaker.
OK:
Noise occurs.

OK → **REPLACE ROOF ANTENNA POLE SUB-ASSEMBLY**

NG

4	**INSPECT RADIO RECEIVER (ANTENNA)**

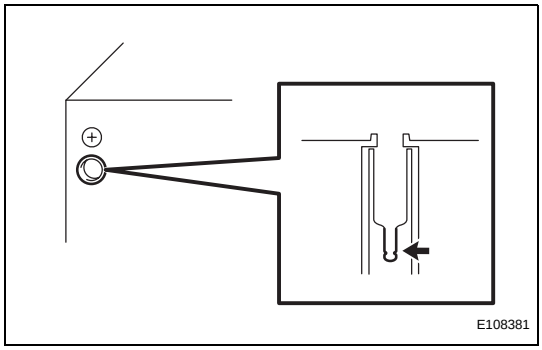

(a) Remove the antenna plug of the radio receiver.
(b) With the radio receiver connector connected, turn the ignition switch to ACC.
(c) Turn on the radio and select the AM mode.
(d) Place a flat-head screwdriver or piece of metal, such as a thin wire, on the antenna jack of the radio receiver. Check that noise is heard from the speakers.
OK:
Noise occurs.

NG → **REPLACE ANTENNA CORD SUB-ASSEMBLY**

OK

REPLACE RADIO RECEIVER

Poor Sound Quality in All Modes (Low Volume)

INSPECTION PROCEDURE

1	ADJUST SOUND QUALITY

(a) Operate the radio receiver to adjust the sound quality.
OK:
Sound quality returns to normal.

OK → **SYSTEM IS OK (POOR SOUND QUALITY)**

NG

2	COMPARE WITH ANOTHER VEHICLE OF SAME MODEL

(a) Compare the vehicle with another vehicle that has a normally functioning audio system. Check if there is any difference in the sound quality.
OK:
No difference is found.

OK → **SYSTEM IS OK (POOR SOUND QUALITY)**

NG

PROCEED TO NEXT CIRCUIT INSPECTION SHOWN IN PROBLEM SYMPTOMS TABLE

Speaker Circuit

DESCRIPTION

Sound signals that have been amplified by the stereo component amplifier are sent to the speakers from the radio receiver through this circuit. If there is a short in this circuit, the sound cannot be heard from the speakers even though there is no malfunction in the speakers.

WIRING DIAGRAM

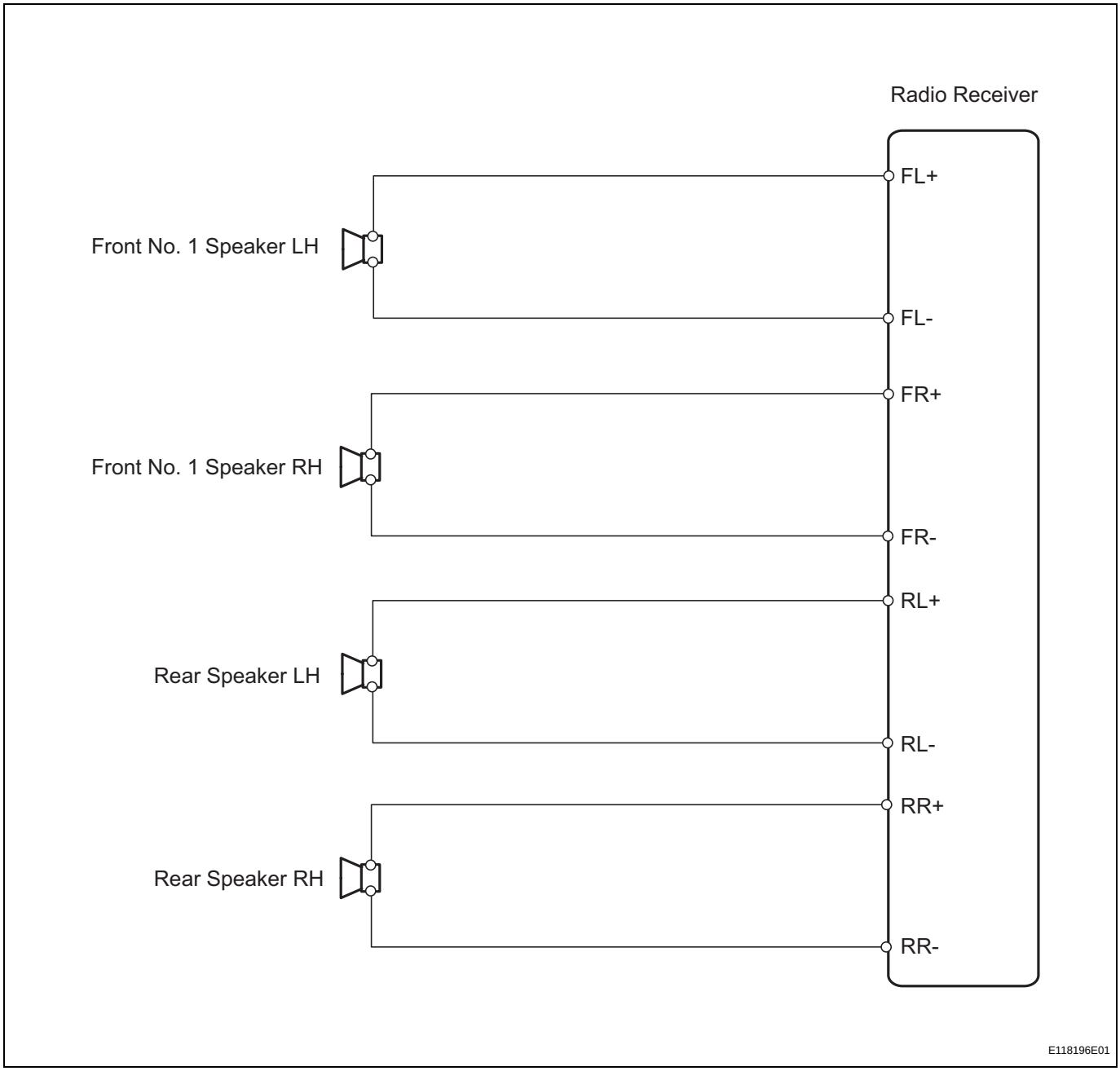

INSPECTION PROCEDURE

1	**CHECK SPEAKER**

(a) Check whether sound is emitted from each speaker.

Result

Result	Proceed to
Front No. 1 speakers have problems	A
Rear speakers have problems	B

B → **Go to step 4**

A

2 INSPECT FRONT NO. 1 SPEAKERS

(a) Check the left and right front No. 1 speakers (See page AV-163 or AV-159).
OK:
Front No. 1 speakers are normal.

NG → **REPLACE FRONT NO. 1 SPEAKER**

OK

3 CHECK HARNESS AND CONNECTOR (RADIO RECEIVER - FRONT NO. 1 SPEAKER)

AV

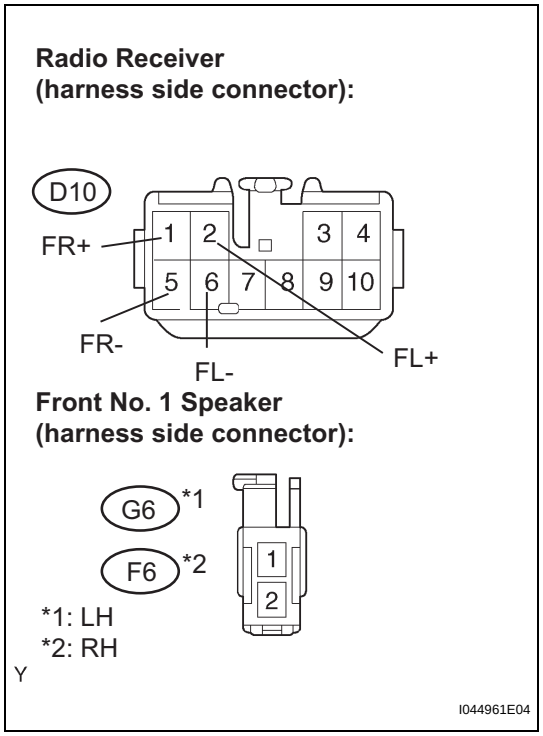

(a) Disconnect the D10 receiver connector.
(b) Disconnect the front No. 1 speaker connector.
(c) Measure the resistance.
Standard resistance

Tester Connection	Specified Condition
D10-2 (FL+) - G6-1	Below 1 Ω
D10-6 (FL-) - G6-2	Below 1 Ω
D10-2 (FL+) - Body ground	10 kΩ or higher
D10-6(FL-) - Body ground	10 kΩ or higher
D10-1 (FR+) - F6-1	Below 1 Ω
D10-5 (FR-) - F6-2	Below 1 Ω
D10-1 (FR+) - Body ground	10 kΩ or higher
D10-1 (FR+) - Body ground	10 kΩ or higher

NG → **REPAIR OR REPLACE HARNESS OR CONNECTOR**

OK

PROCEED TO NEXT CIRCUIT INSPECTION SHOWN IN PROBLEM SYMPTOMS TABLE

4	INSPECT REAR SPEAKERS

(a) Check the left and right rear speakers (See page AV-172, AV-177 or AV-183).
OK:
Rear speakers are normal.

NG → **REPLACE REAR SPEAKER**

OK

5	CHECK HARNESS AND CONNECTOR (RADIO RECEIVER - REAR SPEAKER)

(a) Disconnect the D11 receiver connector.
(b) Disconnect the rear speaker connectors.
(c) Measure the resistance.

Radio Receiver (harness side connector):

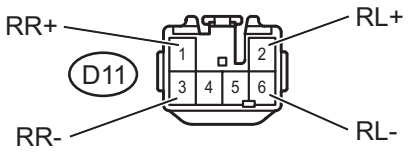

Rear Speaker for Hatchback (harness side connector):

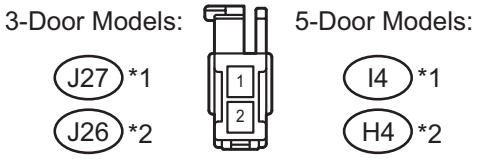

Rear Speaker for Sedan (harness side connector):

E132581E01

Standard resistance (Hatchback 3-Door Models)

Tester Connection	Specified Condition
D11-2 (RL+) - J27-1	Below 1 Ω
D11-6 (RL-) - J27-2	Below 1 Ω
D11-1 (RR+) - J26-1	Below 1 Ω
D11-3 (RR-) - J26-2	Below 1 Ω

Standard resistance (Hatchback 5-Door Models)

Tester Connection	Specified Condition
D11-2 (RL+) - I4-1	Below 1 Ω
D11-6 (RL-) - I4-2	Below 1 Ω
D11-1 (RR+) - H4-1	Below 1 Ω
D11-3 (RR-) - H4-2	Below 1 Ω

Standard resistance (Sedan)

Tester Connection	Specified Condition
D11-2 (RL+) - J39-1	Below 1 Ω
D11-6 (RL-) -J39-2	Below 1 Ω
D11-1 (RR+) - J38-1	Below 1 Ω
D11-3 (RR-) - J38-2	Below 1 Ω

Standard resistance

Tester Connection	Specified Condition
D11-2 (RL+) - Body ground	10 kΩ or higher
D11-6 (RL-) - Body ground	10 kΩ or higher
D11-1 (RR+) - Body ground	10 kΩ or higher
D11-3 (RR-) - Body ground	10 kΩ or higher

NG → **REPAIR OR REPLACE HARNESS OR CONNECTOR**

OK

PROCEED TO NEXT CIRCUIT INSPECTION SHOWN IN PROBLEM SYMPTOMS TABLE

Sound Signal Circuit between Radio Receiver and Stereo Jack Adapter

DESCRIPTION

The stereo jack adapter sends an external device sound signal to the radio receiver through this circuit. The sound signal that has been sent is amplified by the stereo component amplifier, and then is sent to the speakers. If there is an open or short in the circuit, sound cannot be heard from the speakers even if there is no malfunction in the stereo component amplifier, radio receiver, or speakers.

WIRING DIAGRAM

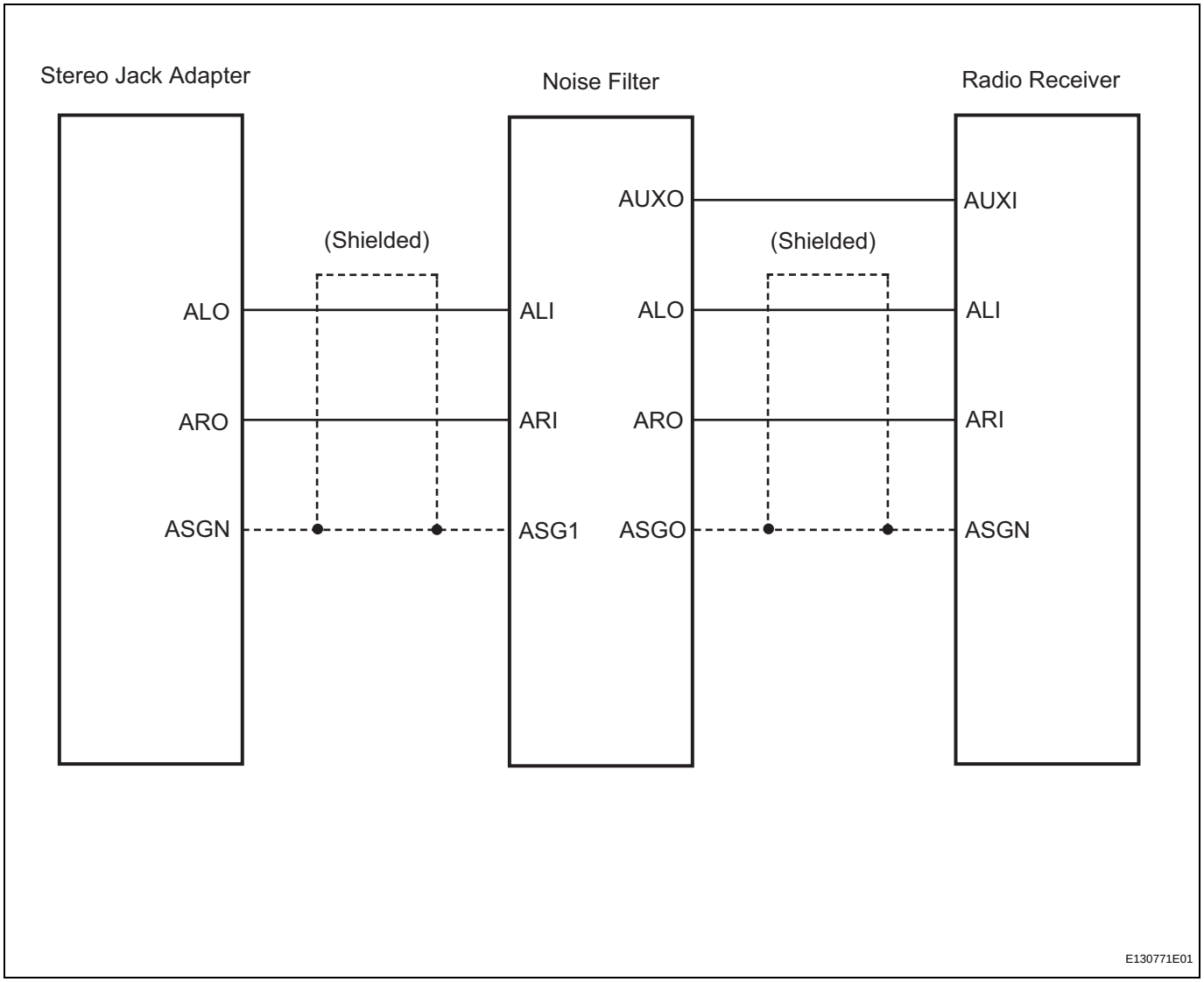

AV

INSPECTION PROCEDURE

1	CHECK HARNESS AND CONNECTOR (RADIO RECEIVER - STEREO JACK ADAPTER)

Radio Receiver (harness side connector):

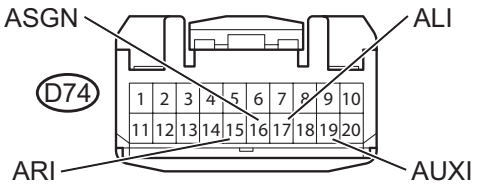

Stereo Jack Adapter (harness side connector):

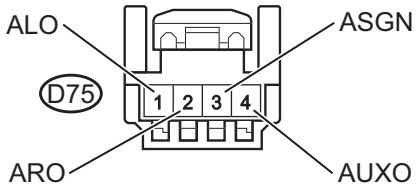

E132582E01

(a) Disconnect the D74 radio receiver connector and D75 stereo jack adapter connector.

(b) Measure the resistance.

Standard resistance

Tester Connection	Specified Condition
AUXI (D74-19) - AUXO (D75-4)	Below 1 Ω
ALI (D74-17) - ALO (D75-1)	Below 1 Ω
ARI (D74-15) - ARO (D75-2)	Below 1 Ω
ASGN (D74-16) - ASGN (D75-3)	Below 1 Ω
AUXI (D74-19) or AUXO (D75-4) - Body ground	10 kΩ or higher
ALI (D74-17) - or ALO (D75-1) - Body ground	10 kΩ or higher
ARI (D74-15) or ARO (D75-2) - Body ground	10 kΩ or higher
ASGN (D74-16) or ASGN (D75-3) - Body ground	10 kΩ or higher

NG → **REPAIR OR REPLACE HARNESS OR CONNECTOR**

OK

PROCEED TO NEXT CIRCUIT INSPECTION SHOWN IN PROBLEM SYMPTOMS TABLE

Radio Receiver Power Source Circuit

DESCRIPTION

This circuit provides power to the radio receiver.

WIRING DIAGRAM

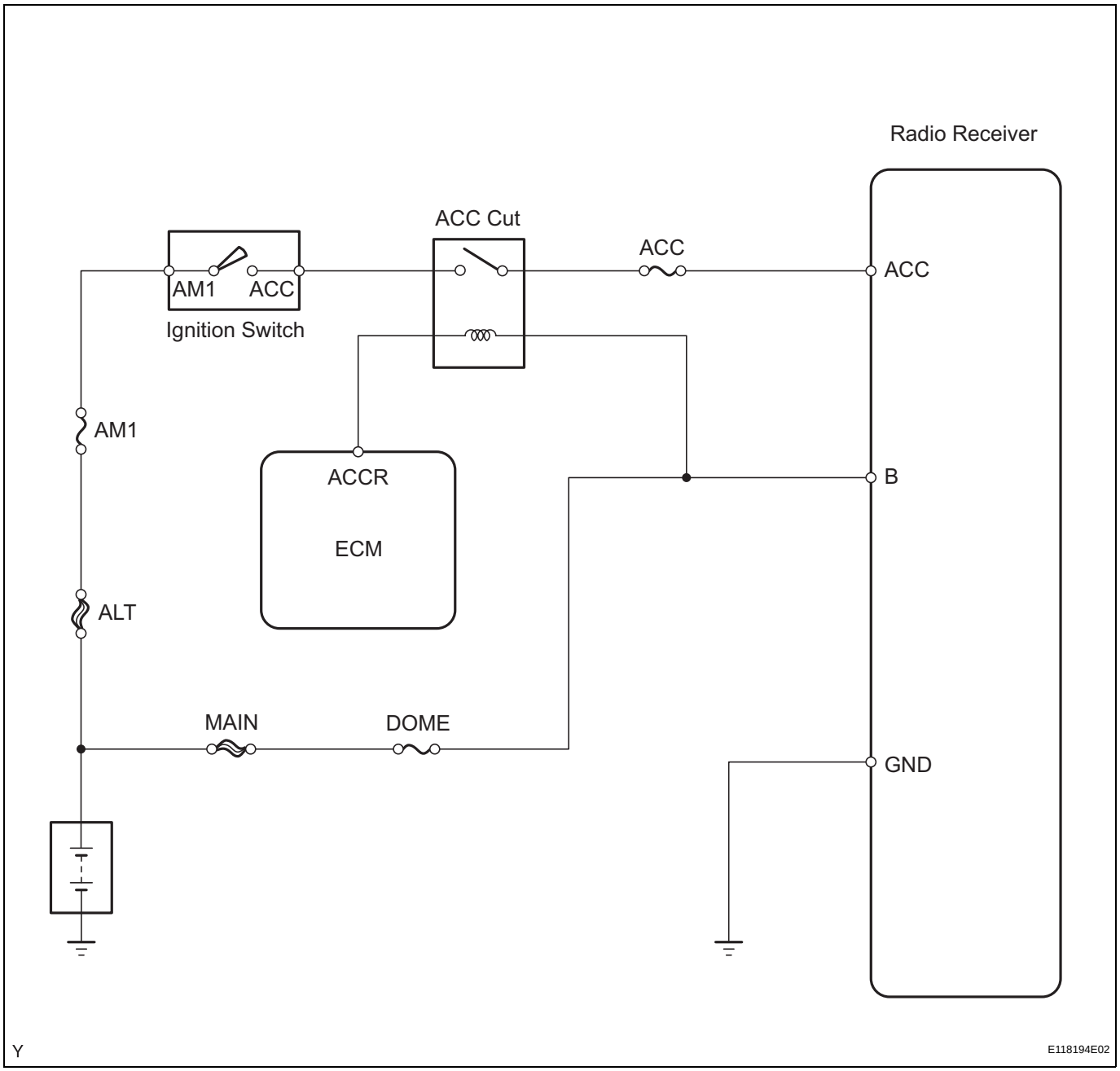

INSPECTION PROCEDURE

1	INSPECT FUSE (ACC, AM1, DOME)

(a) Remove the ACC fuse and AM1 fuse from the main body ECU.
(b) Remove the DOME fuse from the engine room R/B.

AV

(c) Measure the resistance of the fuses.
Standard resistance:
Below 1 Ω

NG → **REPLACE FUSE**

OK

2	**CHECK HARNESS AND CONNECTOR (RADIO RECEIVER - BATTERY AND BODY GROUND)**

Radio Receiver
(harness side connector):

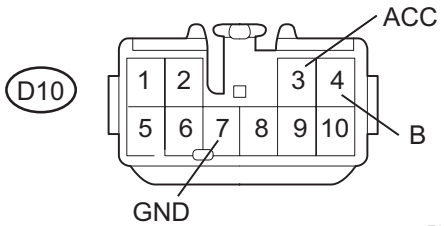

Y E106746E05

(a) Disconnect the D10 receiver connector.
(b) Measure the voltage.
Standard voltage

Tester Connection	Condition	Specified Condition
D10-4 (B) - Body ground	Always	11 to 14 V
D10-3 (ACC) - Body ground	Ignition switch ACC	11 to 14 V

(c) Measure the resistance.
Standard resistance

Tester Connection	Specified Condition
D10-7 (GND) - Body ground	Below 1 Ω

NG → **REPAIR OR REPLACE HARNESS OR CONNECTOR**

OK

PROCEED TO NEXT CIRCUIT INSPECTION SHOWN IN PROBLEM SYMPTOMS TABLE

AV

RADIO RECEIVER (for Sedan)

COMPONENTS

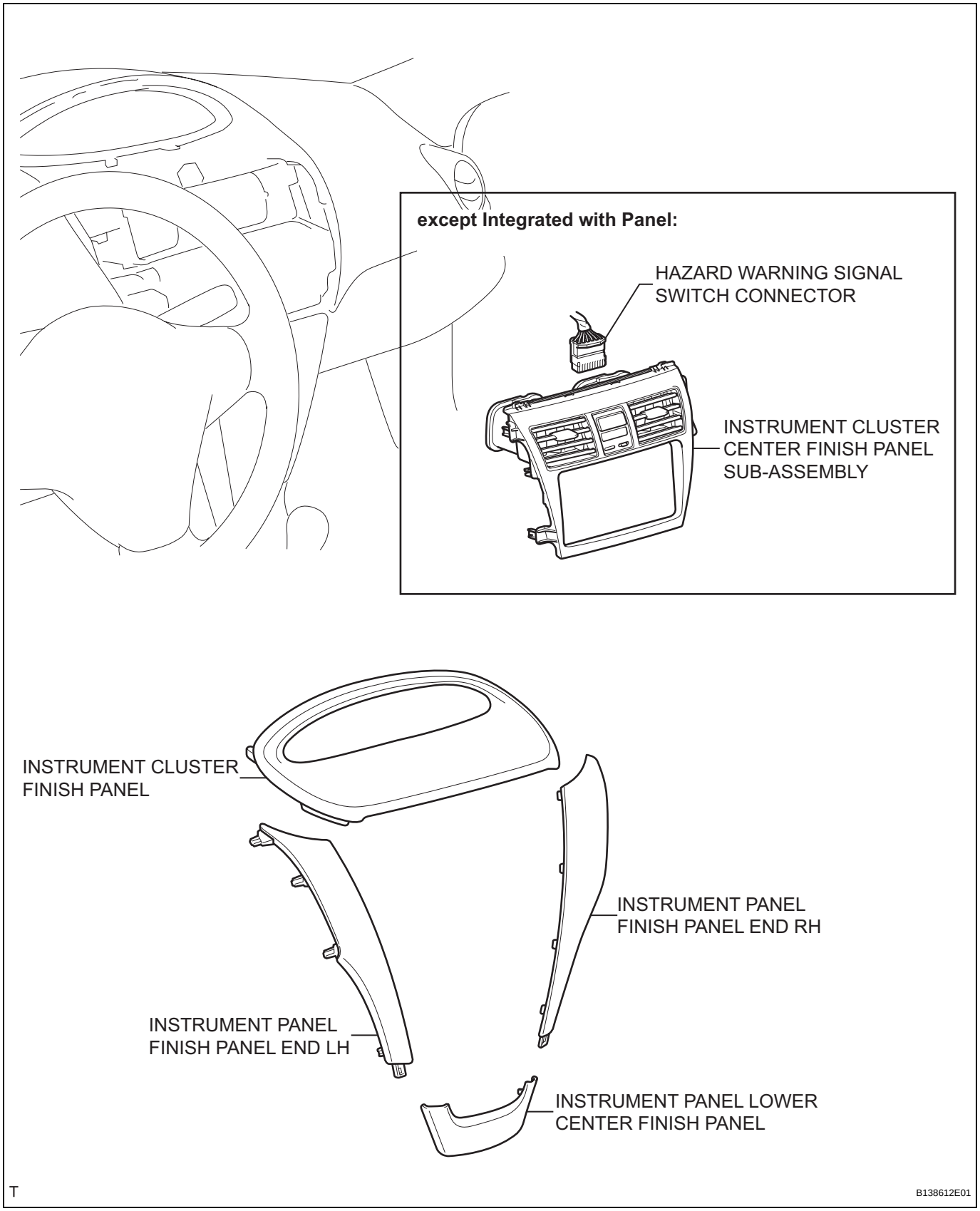

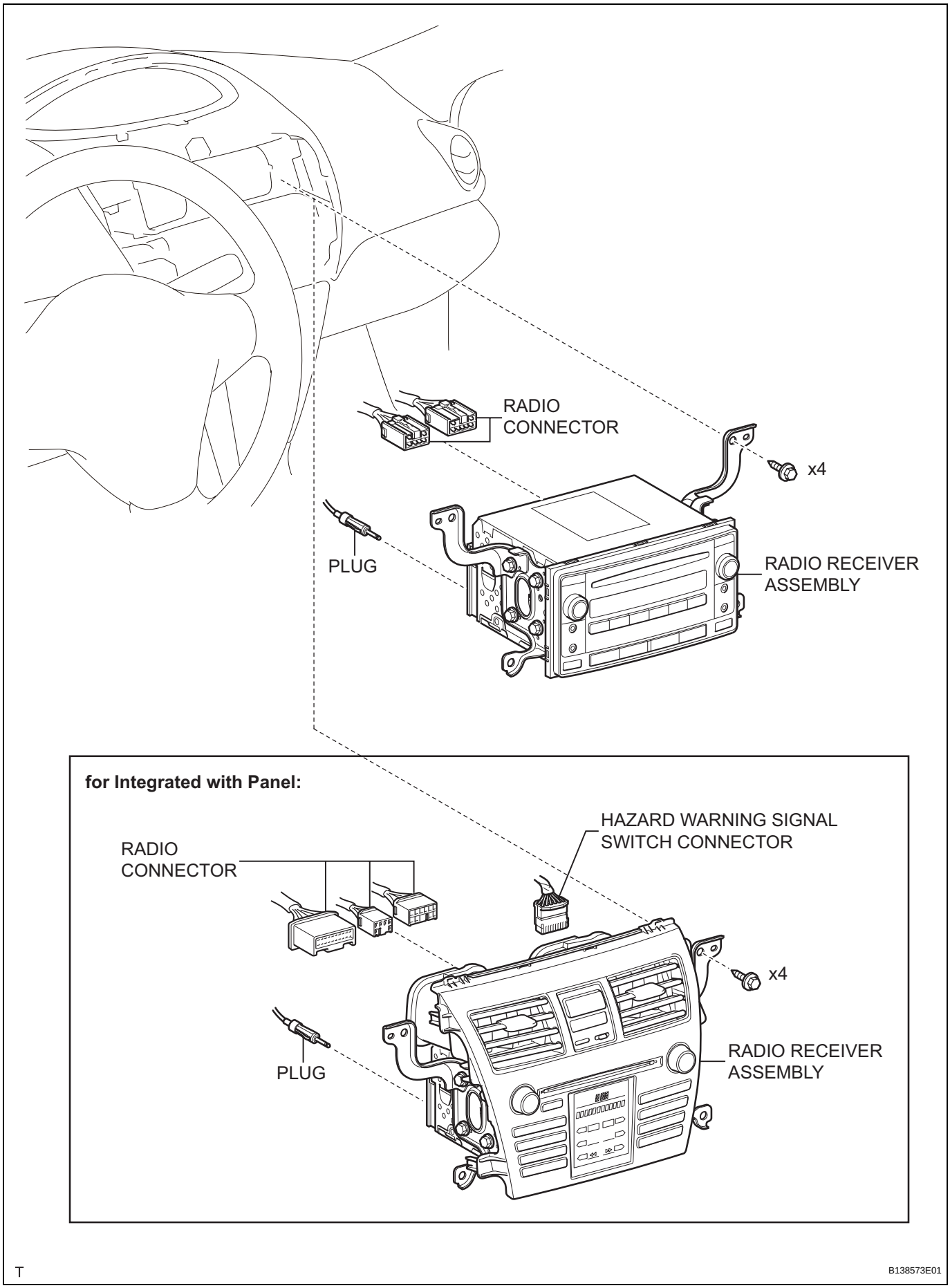
RADIO
CONNECTOR
x4
PLUG
RADIO RECEIVER
ASSEMBLY
for Integrated with Panel:
HAZARD WARNING SIGNAL
SWITCH CONNECTOR
RADIO
CONNECTOR
x4
PLUG
RADIO RECEIVER
ASSEMBLY
T
B138573E01

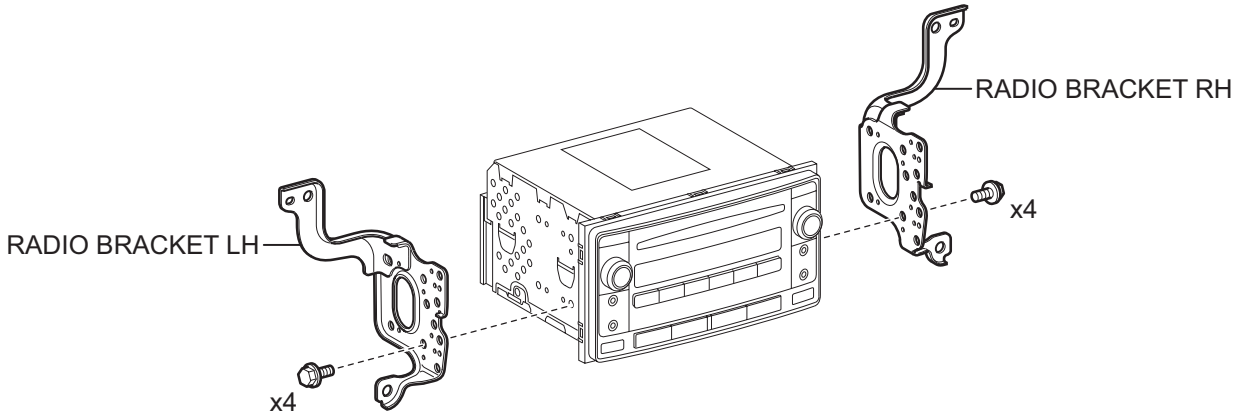

for Integrated with Panel:

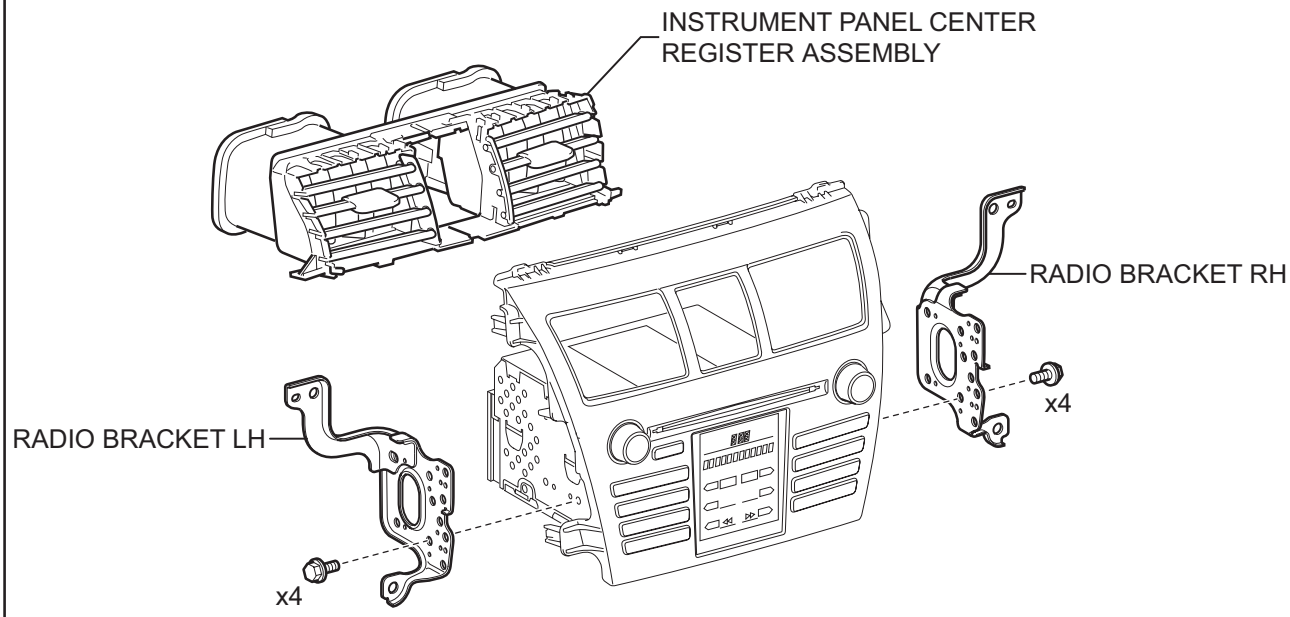

T

B138574E01

REMOVAL

1. **DISCONNECT CABLE FROM NEGATIVE BATTERY TERMINAL**
2. **REMOVE INSTRUMENT PANEL LOWER CENTER FINISH PANEL (See page ME-138)**
3. **REMOVE INSTRUMENT PANEL FINISH PANEL END RH (See page ME-138)**
4. **REMOVE INSTRUMENT PANEL FINISH PANEL END LH (See page ME-138)**
5. **REMOVE INSTRUMENT CLUSTER FINISH PANEL (See page ME-139)**
6. **REMOVE INSTRUMENT CLUSTER CENTER FINISH PANEL SUB-ASSEMBLY (except Integrated with Panel) (See page IP-43)**
7. **REMOVE RADIO RECEIVER ASSEMBLY**
   (a) for Integrated with Panel:
      (1) Disconnect the hazard warning signal switch connector.
      (2) Remove the 4 bolts.

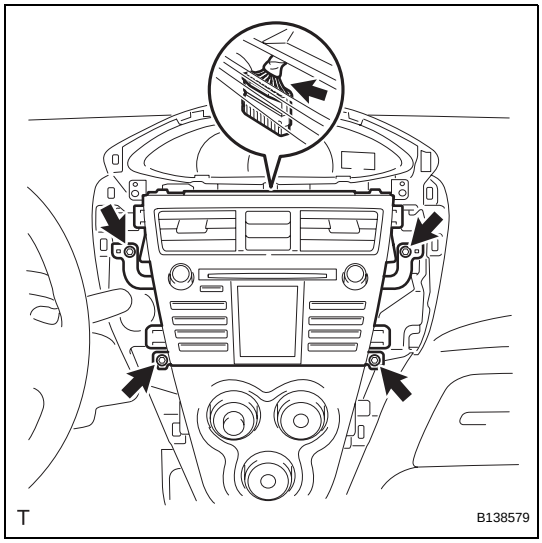

      (3) Disengage the 4 clips and the 4 claws and remove the radio receiver.

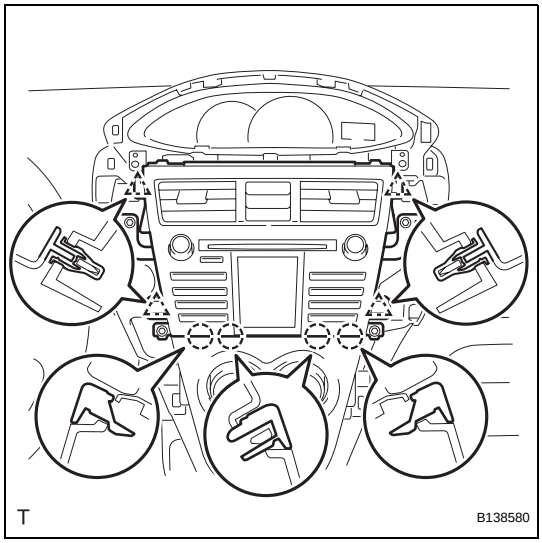

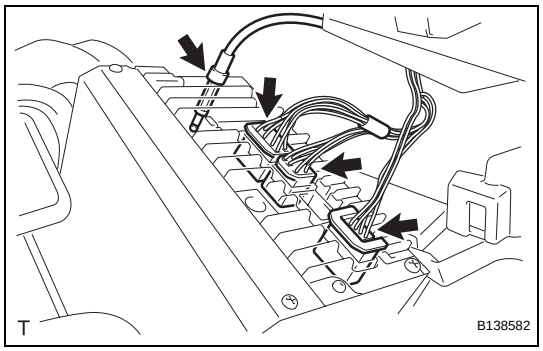

(4) Disconnect the plug.
(5) Disconnect the 3 radio connectors.

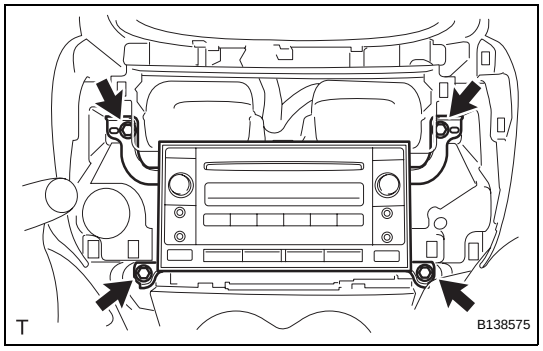

(b) except Integrated with Panel:
(1) Remove the 4 bolts and the radio receiver.

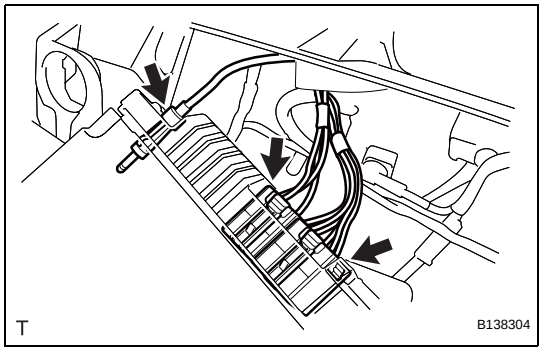

(2) Disconnect the plug.
(3) Disconnect the 2 radio connectors.

DISASSEMBLY

1. REMOVE INSTRUMENT PANEL CENTER REGISTER ASSEMBLY (for Integrated with Panel) (See page LI-166)

2. REMOVE RADIO BRACKET RH

(a) for Integrated with Panel:

(1) Remove the 4 screws and the radio bracket.

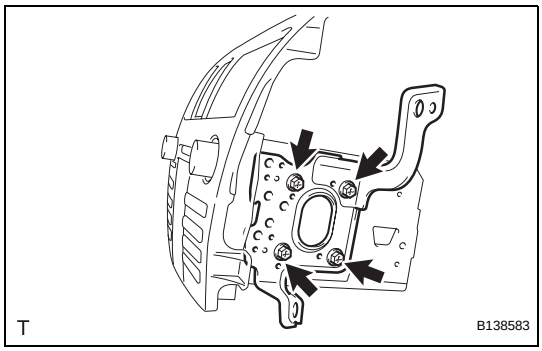

(b) except Integrated with Panel:

(1) Remove the 4 screws and the radio bracket.

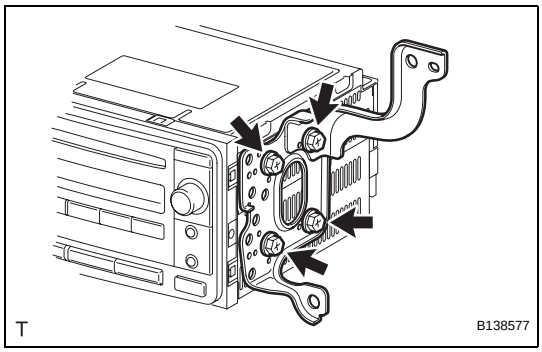

3. REMOVE RADIO BRACKET LH

HINT:

Use the same procedure as for the RH side.

AV

REASSEMBLY

1. INSTALL RADIO BRACKET RH

(a) for Integrated with Panel:

(1) Align the 6 bosses of the radio bracket with the hole in the radio receiver and install the radio bracket with the 2 screws.

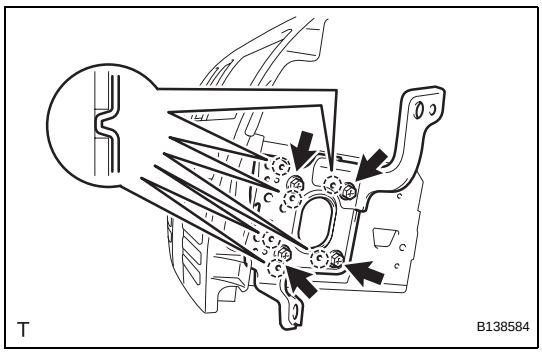

(b) except Integrated with Panel:

(1) Align the 6 bosses of the radio bracket with the hole in the radio receiver and install the radio bracket with the 4 screws.

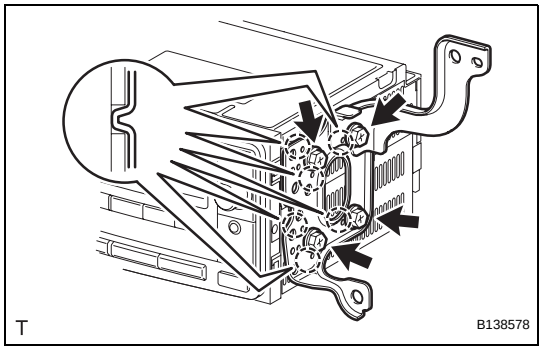

2. REMOVE RADIO BRACKET LH

HINT:

Use the same procedure as for the RH side.

3. INSTALL INSTRUMENT PANEL CENTER REGISTER ASSEMBLY (for Integrated with Panel) (See page LI-168)

INSTALLATION

1. INSTALL RADIO RECEIVER ASSEMBLY

(a) for Integrated with Panel:

(1) Connect the plug.

(2) Connect the 3 radio connectors.

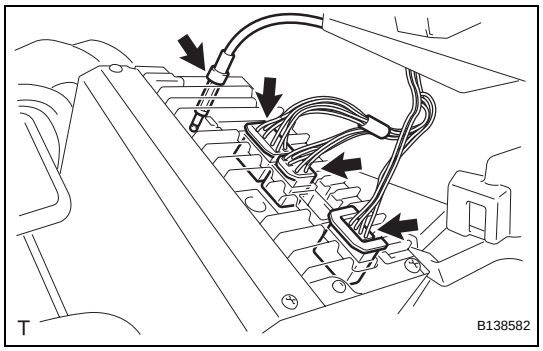

(3) Align the 2 bosses of the instrument panel with the hole in the radio bracket.

(4) Engage the 4 clips and 4 claws and install the radio receiver.

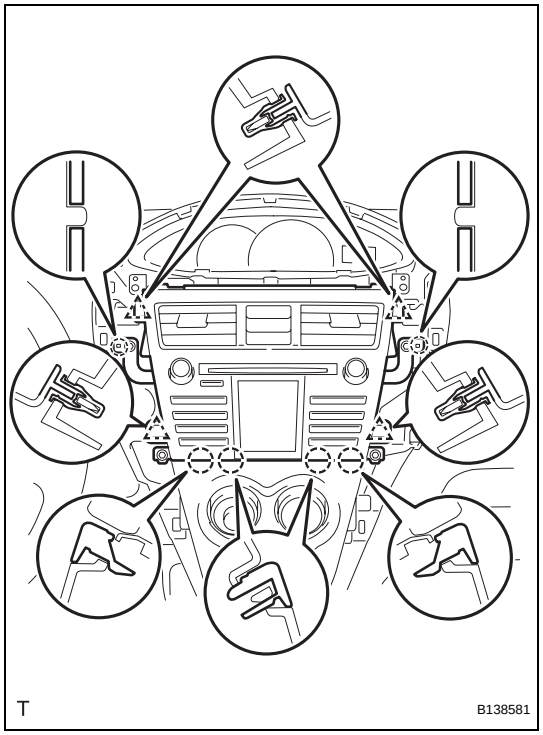

(5) Tighten the 4 bolts.

(6) Connect the hazard warning signal switch connector.

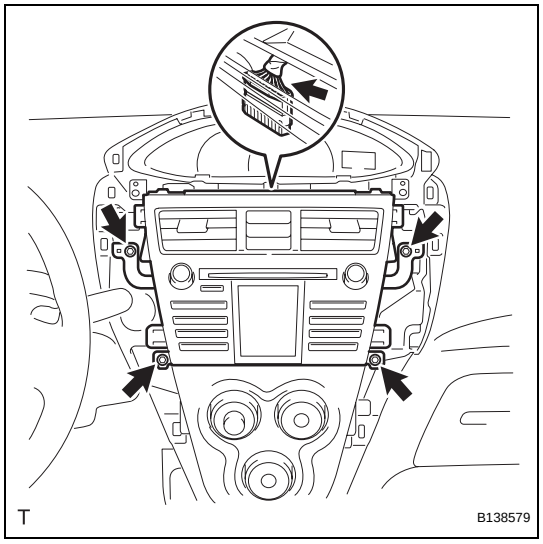

AV

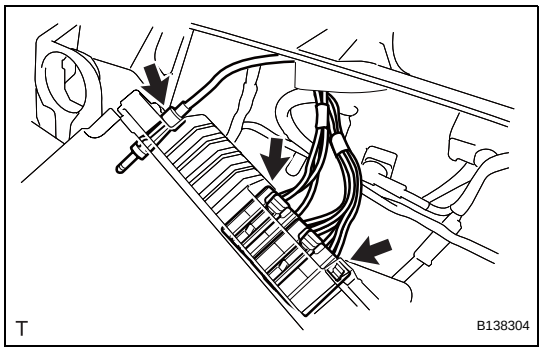

(b) except Integrated with Panel:
  (1) Connect the plug.
  (2) Connect the 2 radio connectors.

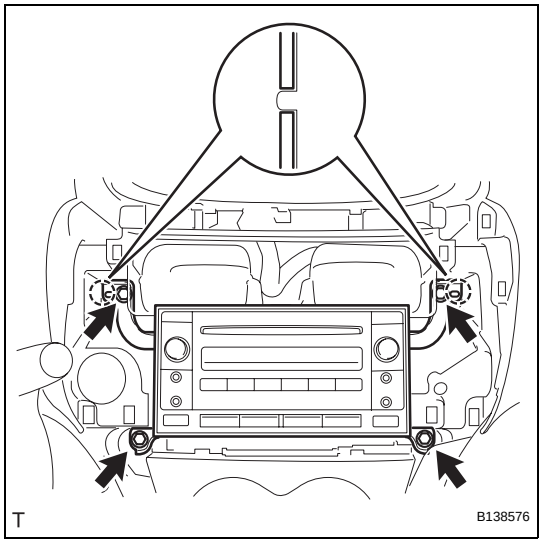

  (3) Align the 2 bosses of the instrument panel with the hole in the radio bracket.
  (4) Install the radio receiver with the 4 bolts.

2. INSTALL INSTRUMENT CLUSTER CENTER FINISH PANEL SUB-ASSEMBLY (except Integrated with Panel) (See page IP-56)

3. INSTALL INSTRUMENT CLUSTER FINISH PANEL (See page ME-140)

4. INSTALL INSTRUMENT PANEL FINISH PANEL END RH (See page ME-141)

5. INSTALL INSTRUMENT PANEL FINISH PANEL END LH (See page ME-141)

6. INSTALL INSTRUMENT PANEL LOWER CENTER FINISH PANEL (See page ME-142)

7. CONNECT CABLE TO NEGATIVE BATTERY TERMINAL
Torque: 5.4 N*m (55 kgf*cm, 48 in.*lbf)

RADIO RECEIVER (for Hatchback)

COMPONENTS

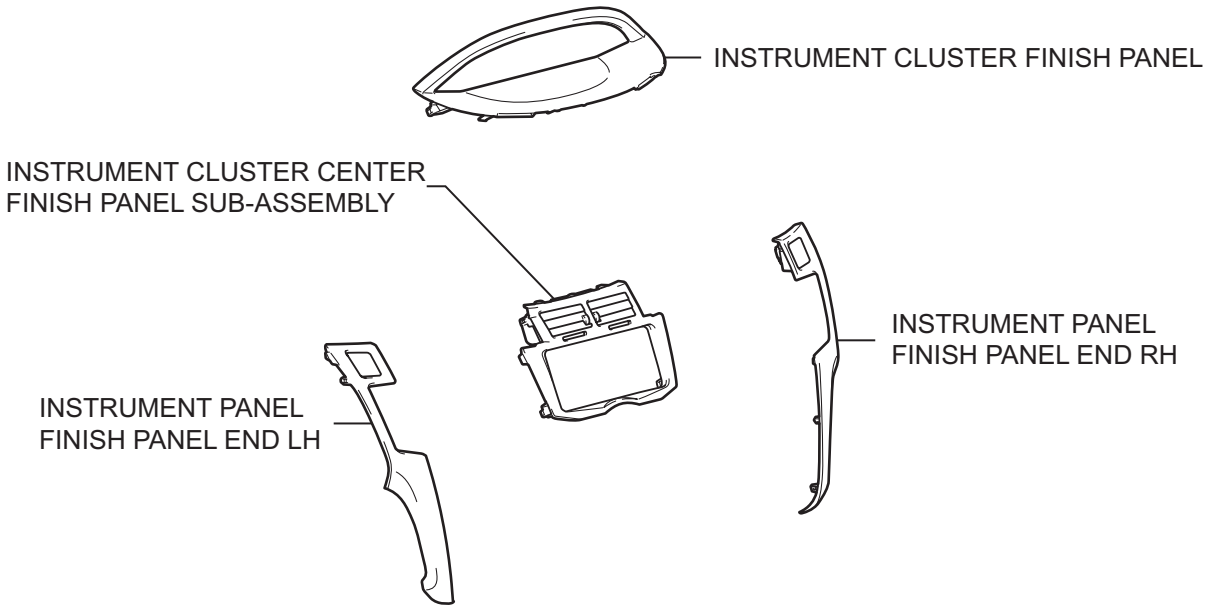

w/ CD Player:

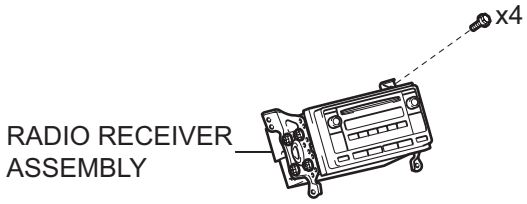

P

B138642E01

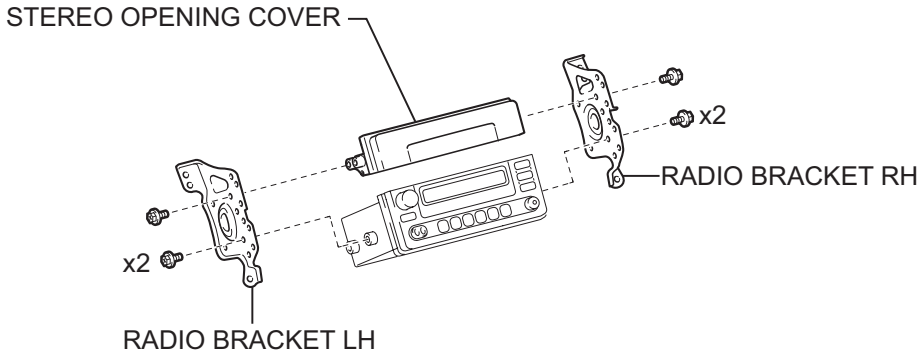

w/ CD Player:

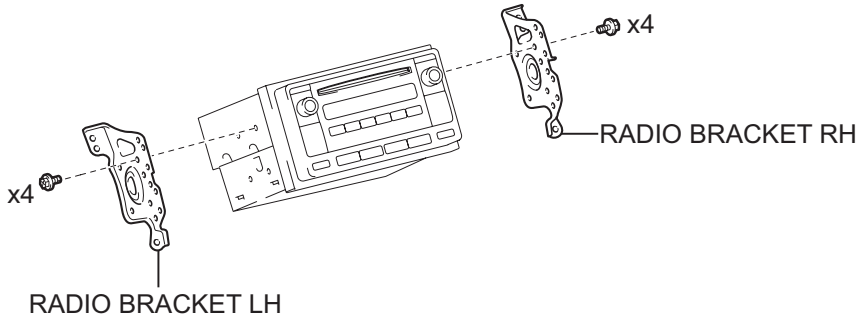

P

B138643E01

REMOVAL

1. **DISCONNECT CABLE FROM NEGATIVE BATTERY TERMINAL**
2. **REMOVE INSTRUMENT PANEL FINISH PANEL END RH (See page ME-145)**
3. **REMOVE INSTRUMENT PANEL FINISH PANEL END LH (See page ME-145)**
4. **REMOVE INSTRUMENT CLUSTER FINISH PANEL (See page ME-145)**
5. **REMOVE INSTRUMENT CLUSTER CENTER FINISH PANEL SUB-ASSEMBLY (See page AC-250)**
6. **REMOVE RADIO RECEIVER ASSEMBLY**
   (a) Remove the 4 screws.
   (b) Disconnect the connectors and remove the radio receiver.

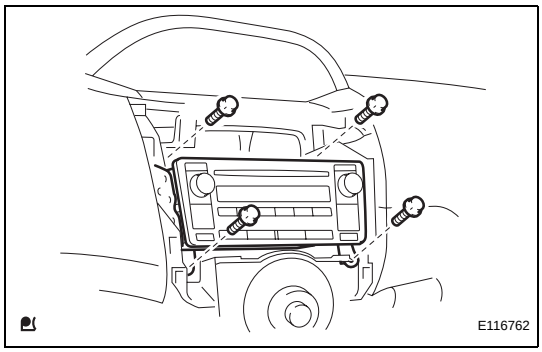

DISASSEMBLY

1. **REMOVE RADIO BRACKET RH**
   (a) w/ CD Player:
      (1) Remove the 4 screws and remove the radio bracket.

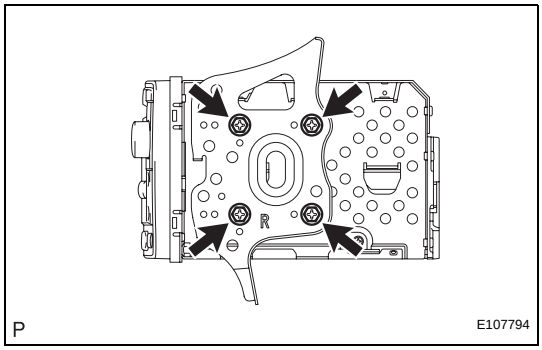

   (b) w/o CD Player:
      (1) Remove the 3 screws and remove the radio bracket.

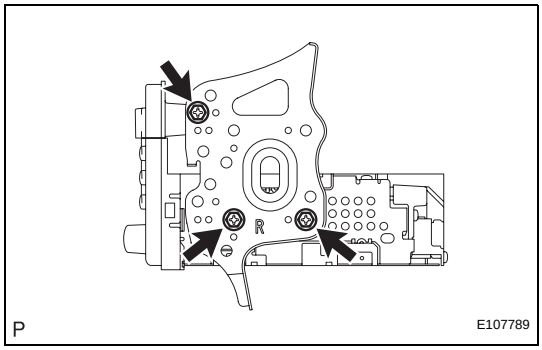

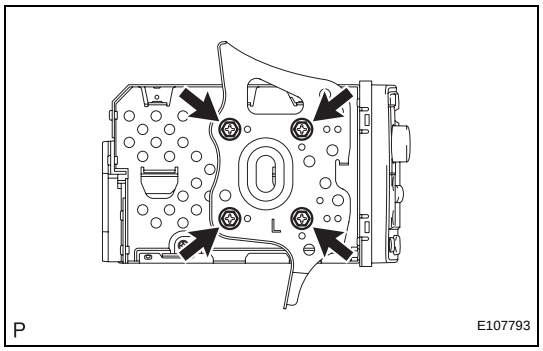

2. REMOVE RADIO BRACKET LH

(a) w/ CD Player:

(1) Remove the 4 screws and remove the radio bracket.

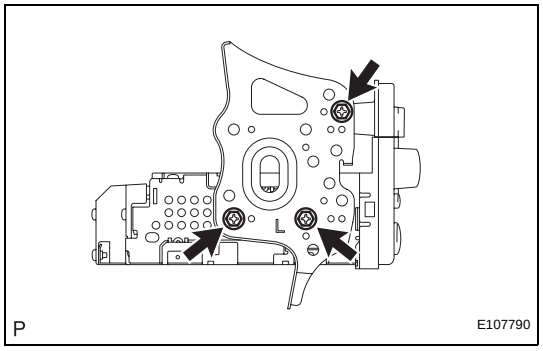

(b) w/o CD Player:

(1) Remove the 3 screws and remove the radio bracket.

REASSEMBLY

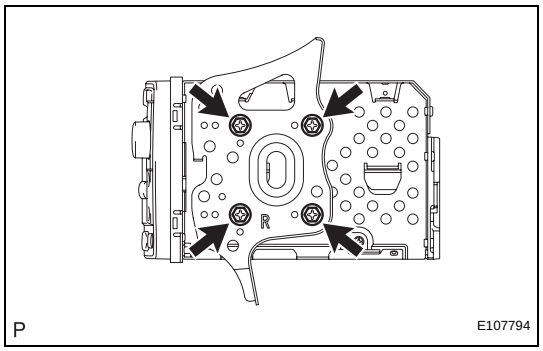

1. INSTALL RADIO BRACKET RH

(a) w/ CD Player:

(1) Install the radio bracket with the 4 screws.

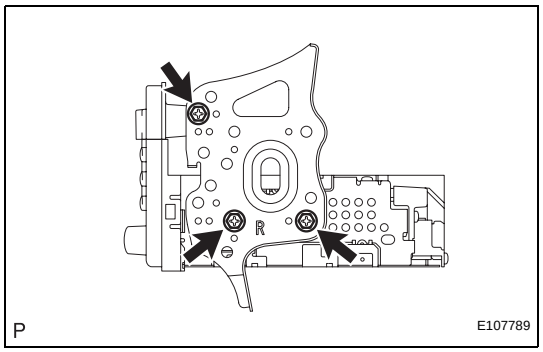

(b) w/o CD Player:

(1) Install the radio bracket with the 3 screws.

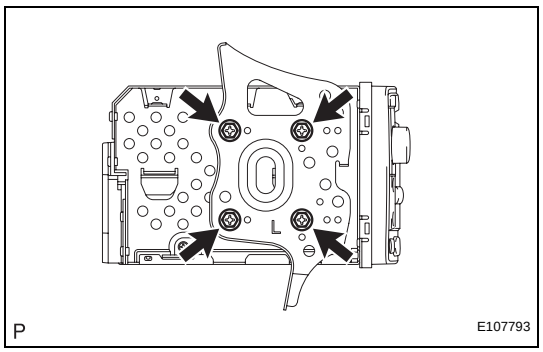

2. INSTALL RADIO BRACKET LH

(a) w/ CD Player:

(1) Install the radio bracket with the 4 screws.

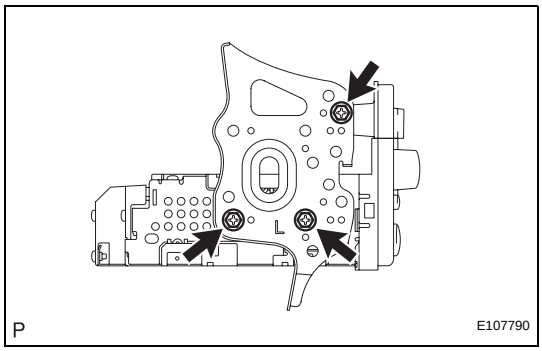

(b) w/o CD Player:
(1) Install the radio bracket with the 3 screws.

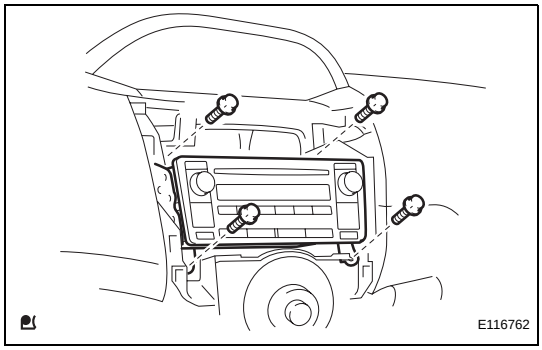

INSTALLATION

1. INSTALL RADIO RECEIVER ASSEMBLY
(a) Connect the connectors.
(b) Install the radio receiver with the 4 screws.

2. INSTALL INSTRUMENT CLUSTER CENTER FINISH PANEL SUB-ASSEMBLY (See page AC-258)

3. INSTALL INSTRUMENT CLUSTER FINISH PANEL (See page ME-148)

4. INSTALL INSTRUMENT PANEL FINISH PANEL END RH (See page ME-149)

5. INSTALL INSTRUMENT PANEL FINISH PANEL END LH (See page ME-149)

6. CONNECT CABLE TO NEGATIVE BATTERY TERMINAL
Torque: 5.4 N*m (55 kgf*cm, 48 in.*lbf)

RADIO ANTENNA CORD (for Sedan)

COMPONENTS

for 60/40 Split Seat Type:

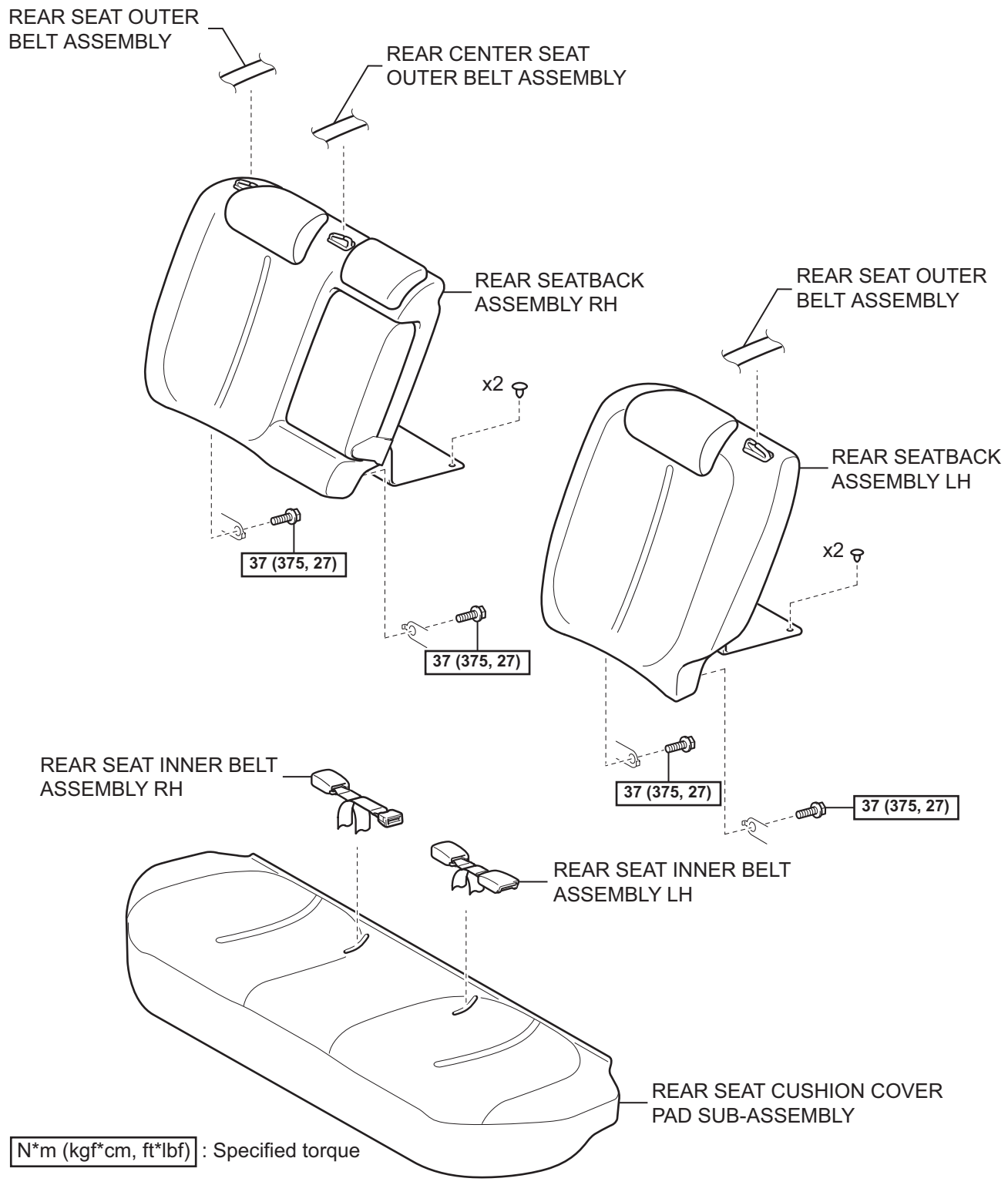

AV

for Fixed Seat Type:

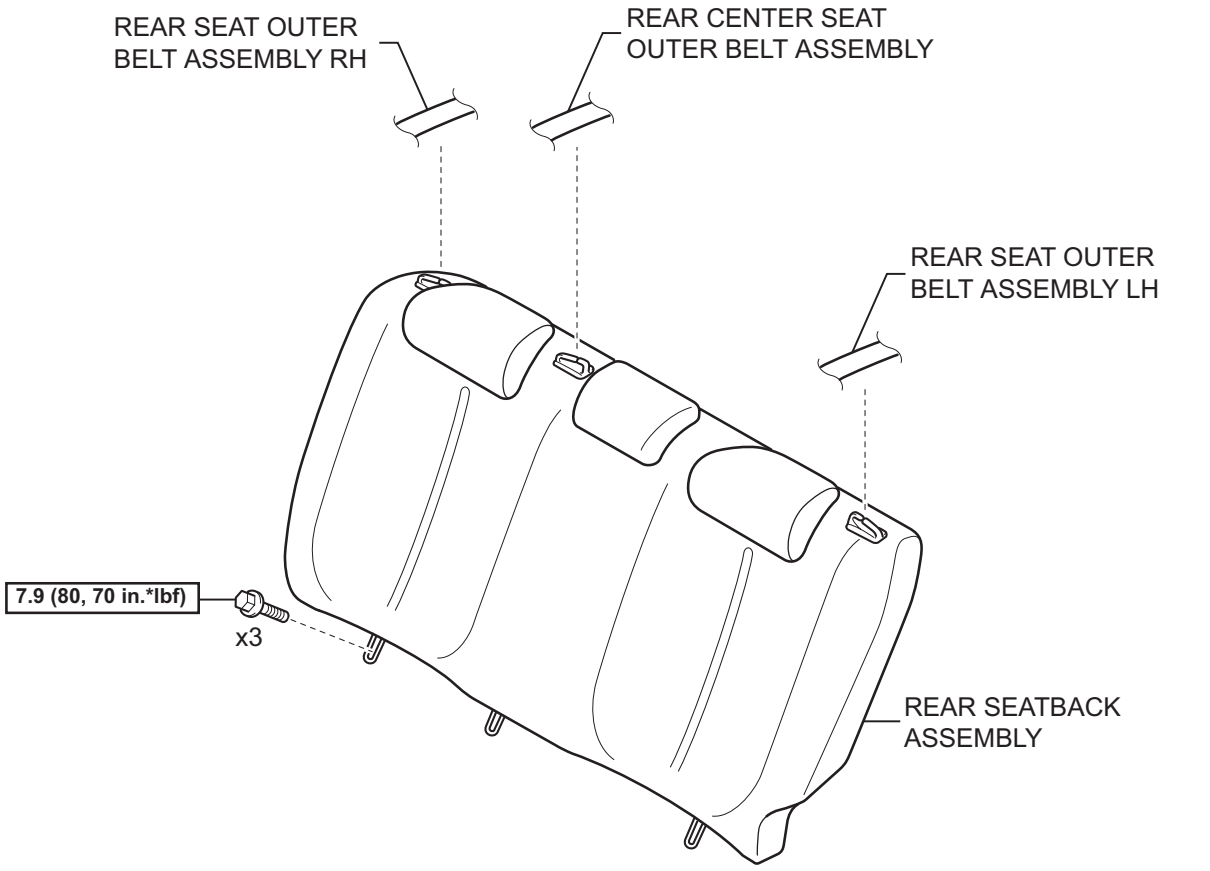

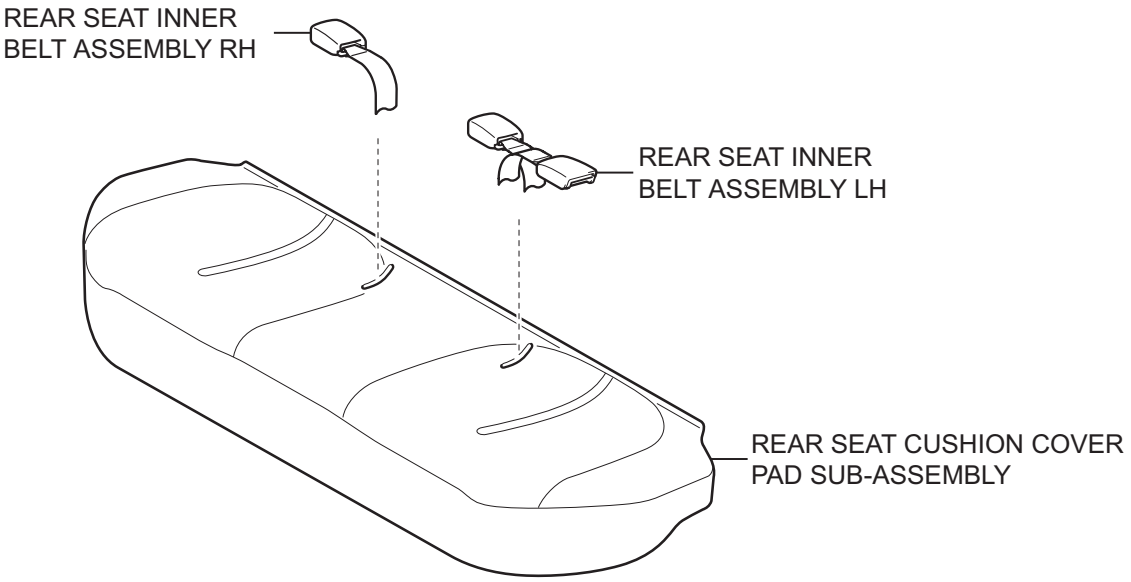

N*m (kgf*cm, ft*lbf) : Specified torque

T

B138611E01

for 60/40 Split Seat Type:

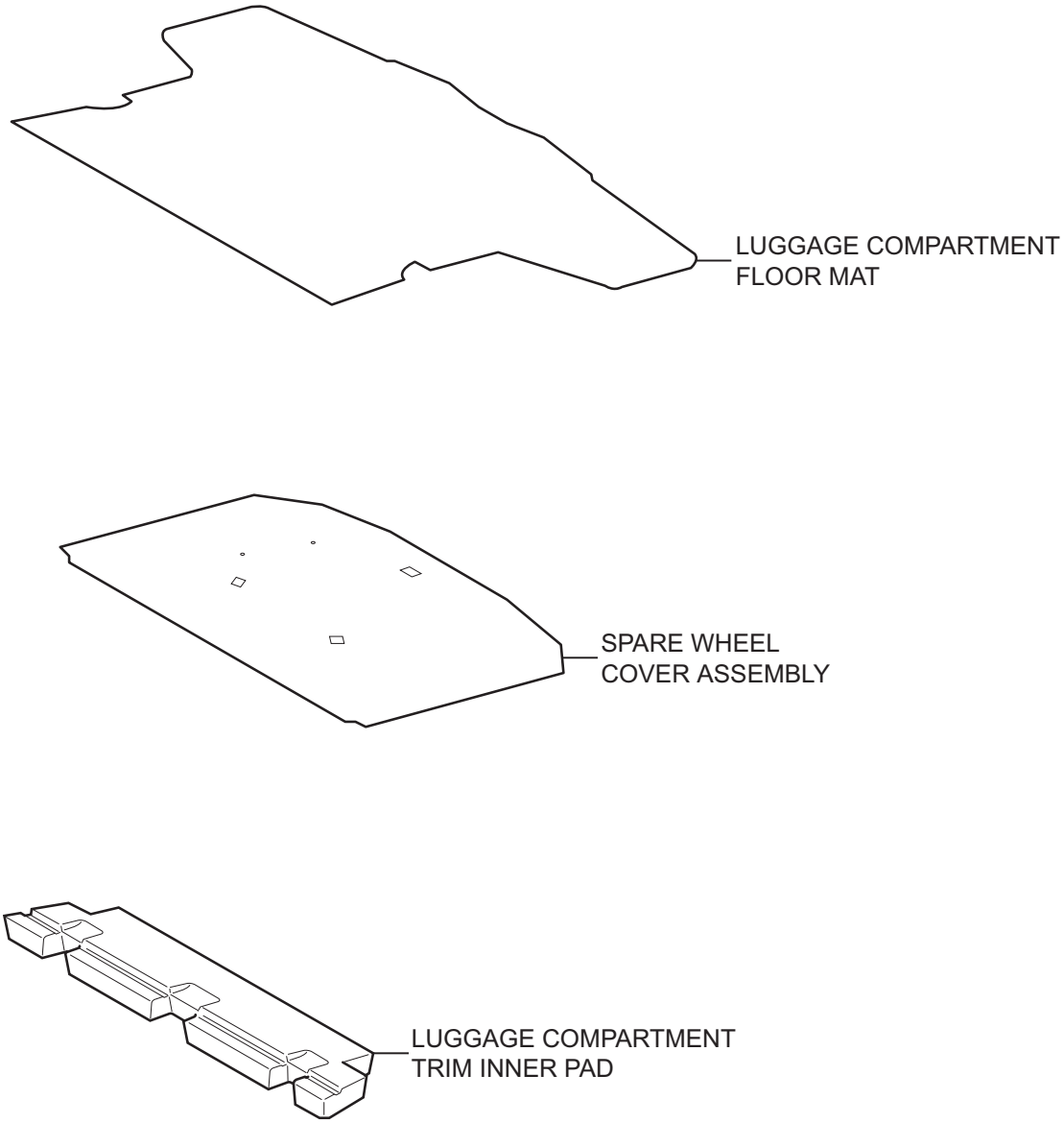

for Grand Tire:

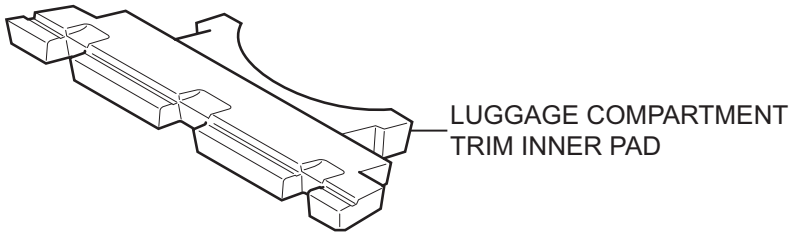

T

B138565E01

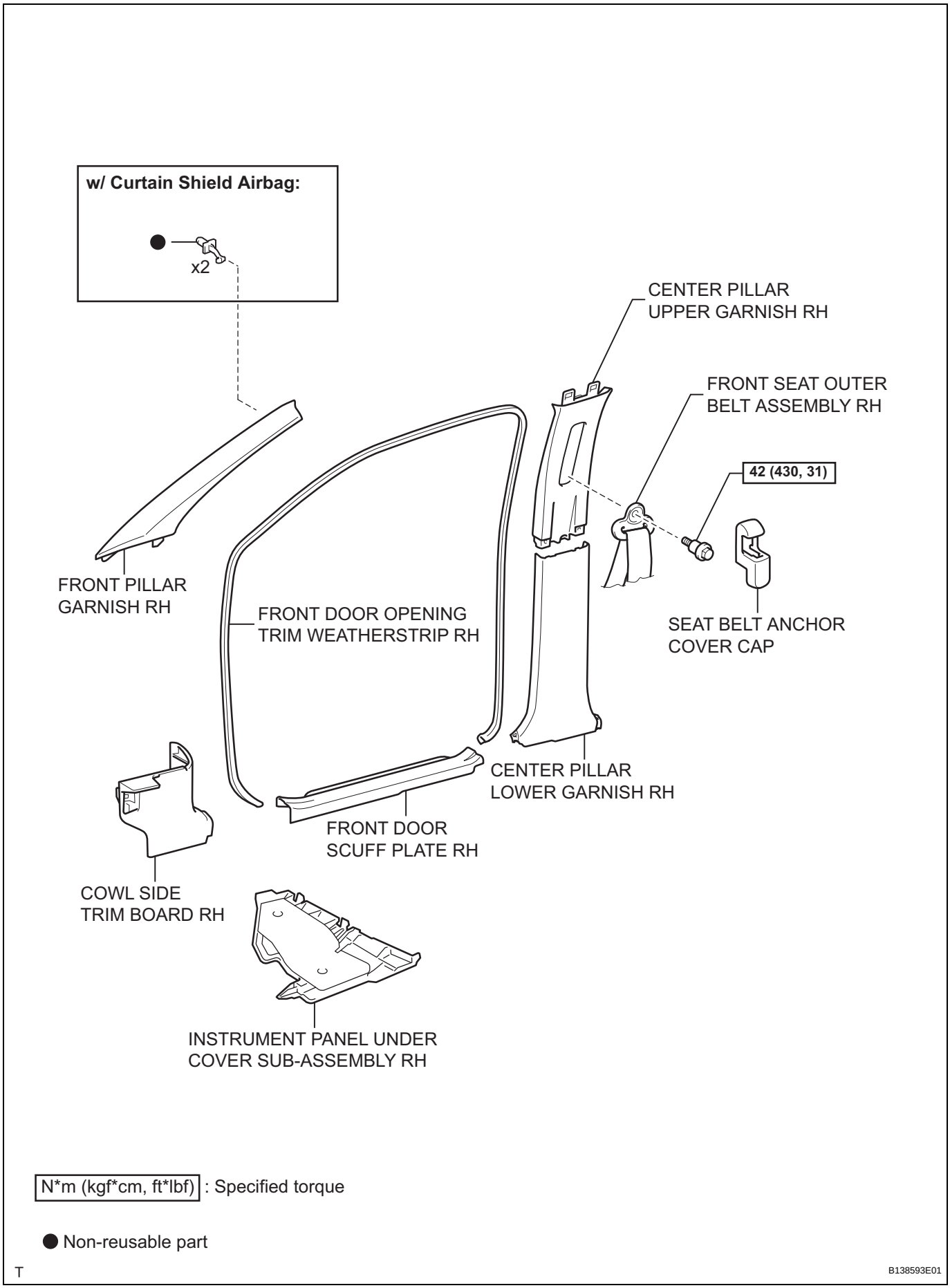
w/ Curtain Shield Airbag:
x2
CENTER PILLAR UPPER GARNISH RH
FRONT SEAT OUTER BELT ASSEMBLY RH
42 (430, 31)
FRONT PILLAR GARNISH RH
FRONT DOOR OPENING TRIM WEATHERSTRIP RH
SEAT BELT ANCHOR COVER CAP
CENTER PILLAR LOWER GARNISH RH
FRONT DOOR SCUFF PLATE RH
COWL SIDE TRIM BOARD RH
INSTRUMENT PANEL UNDER COVER SUB-ASSEMBLY RH
N*m (kgf*cm, ft*lbf) : Specified torque
● Non-reusable part
T
B138593E01

AV

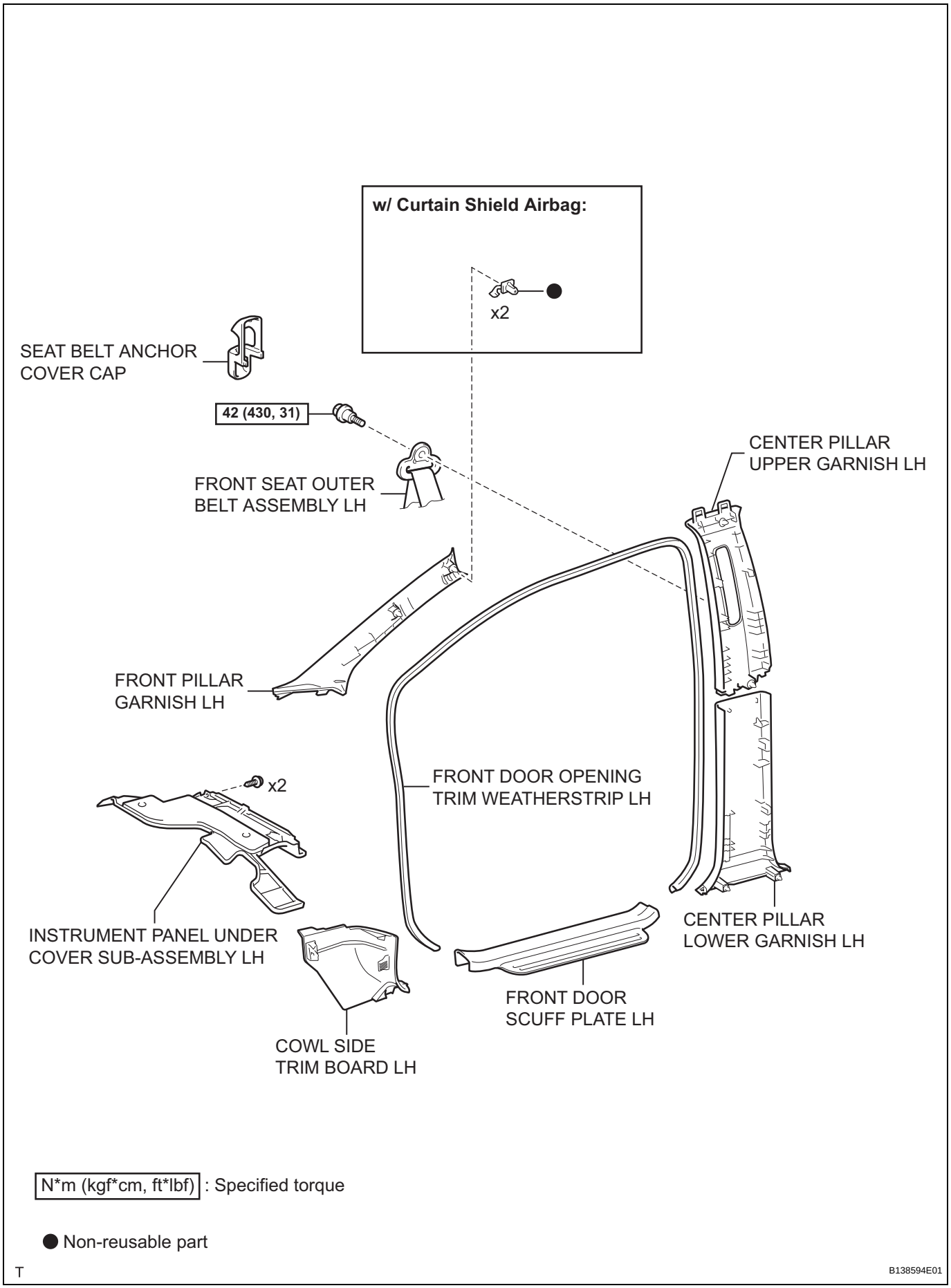
w/ Curtain Shield Airbag:
x2
SEAT BELT ANCHOR COVER CAP
42 (430, 31)
FRONT SEAT OUTER BELT ASSEMBLY LH
CENTER PILLAR UPPER GARNISH LH
FRONT PILLAR GARNISH LH
FRONT DOOR OPENING TRIM WEATHERSTRIP LH
x2
INSTRUMENT PANEL UNDER COVER SUB-ASSEMBLY LH
CENTER PILLAR LOWER GARNISH LH
FRONT DOOR SCUFF PLATE LH
COWL SIDE TRIM BOARD LH
N*m (kgf*cm, ft*lbf) : Specified torque
● Non-reusable part
T
B138594E01

AV

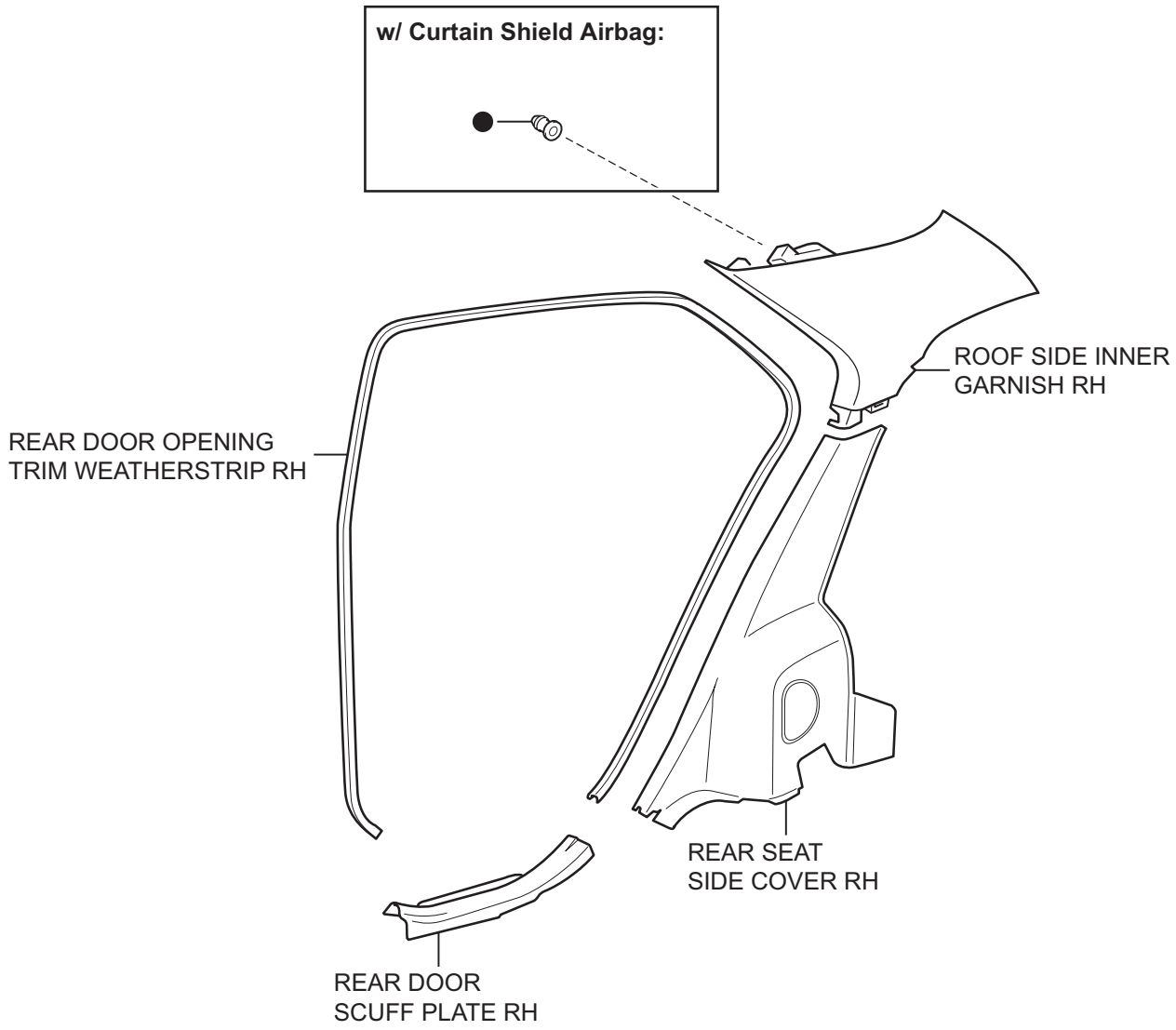

● Non-reusable part

T

B134769E01

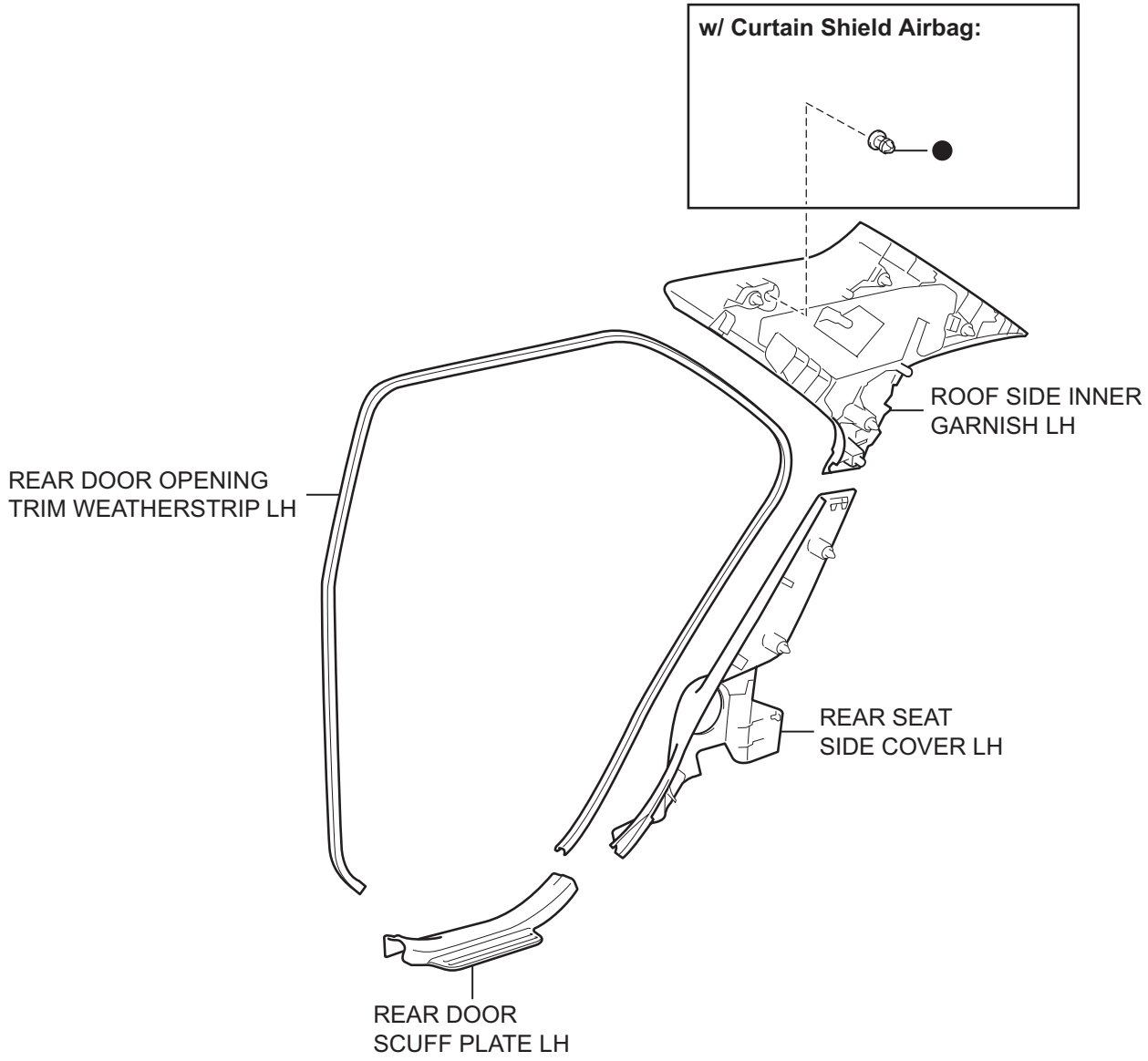

● Non-reusable part

T

B134770E01

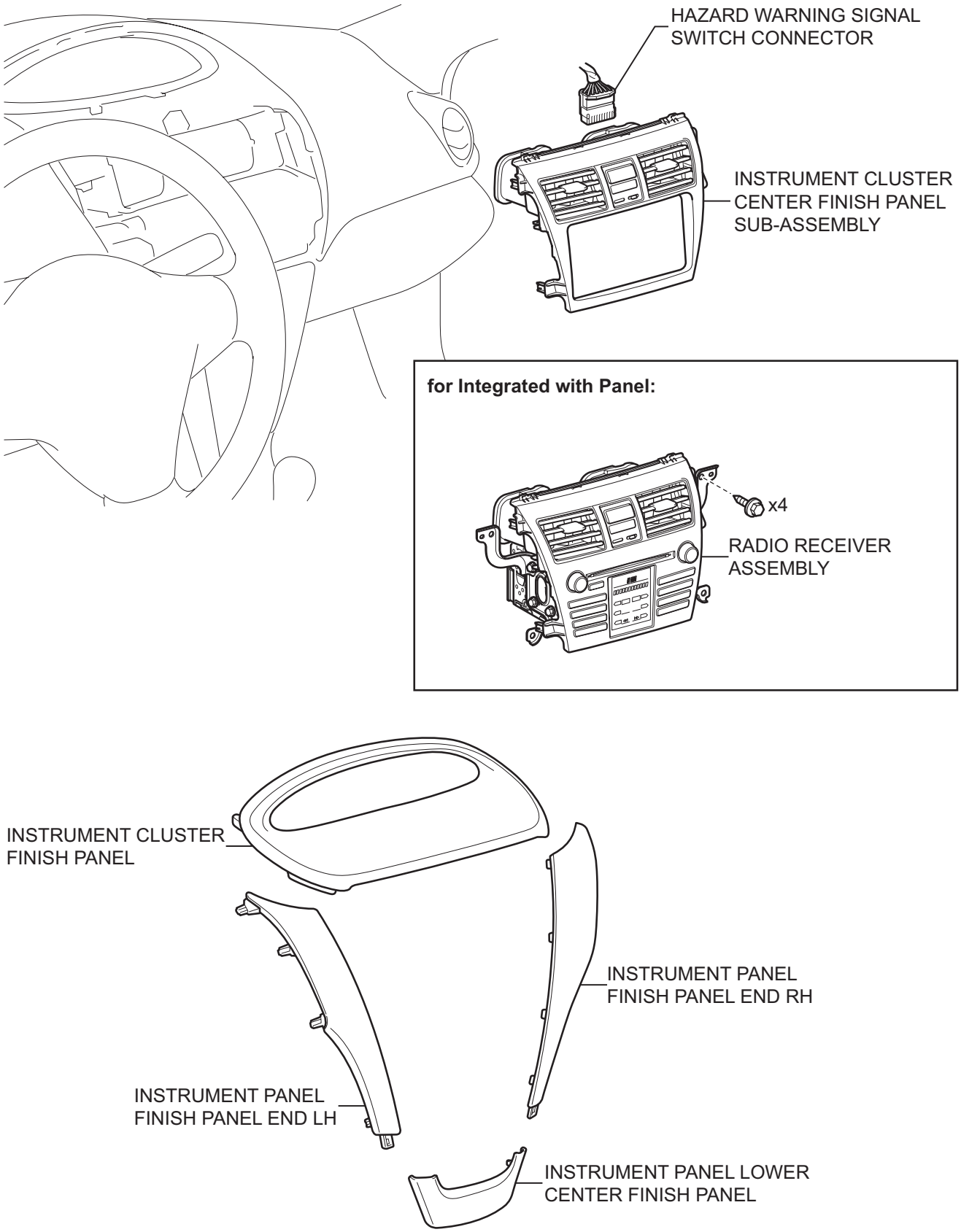

T

B138571E01

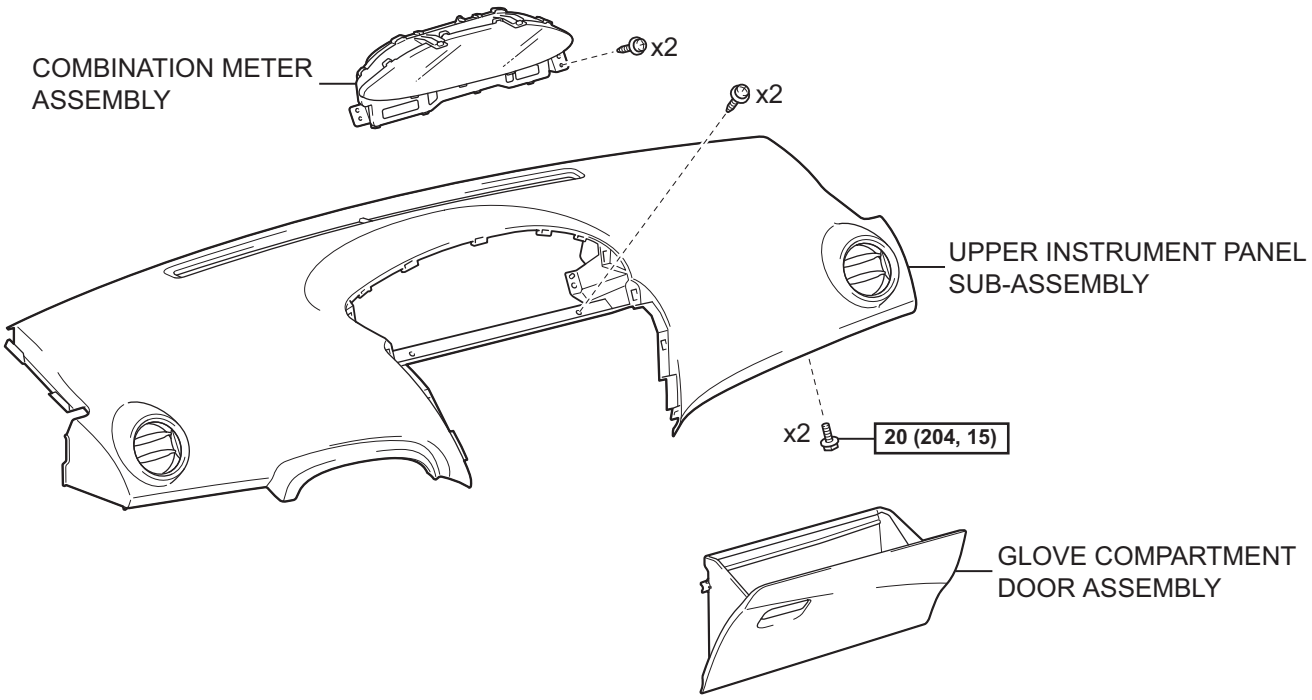

N*m (kgf*cm, ft*lbf) : Specified torque

P

B138613E01

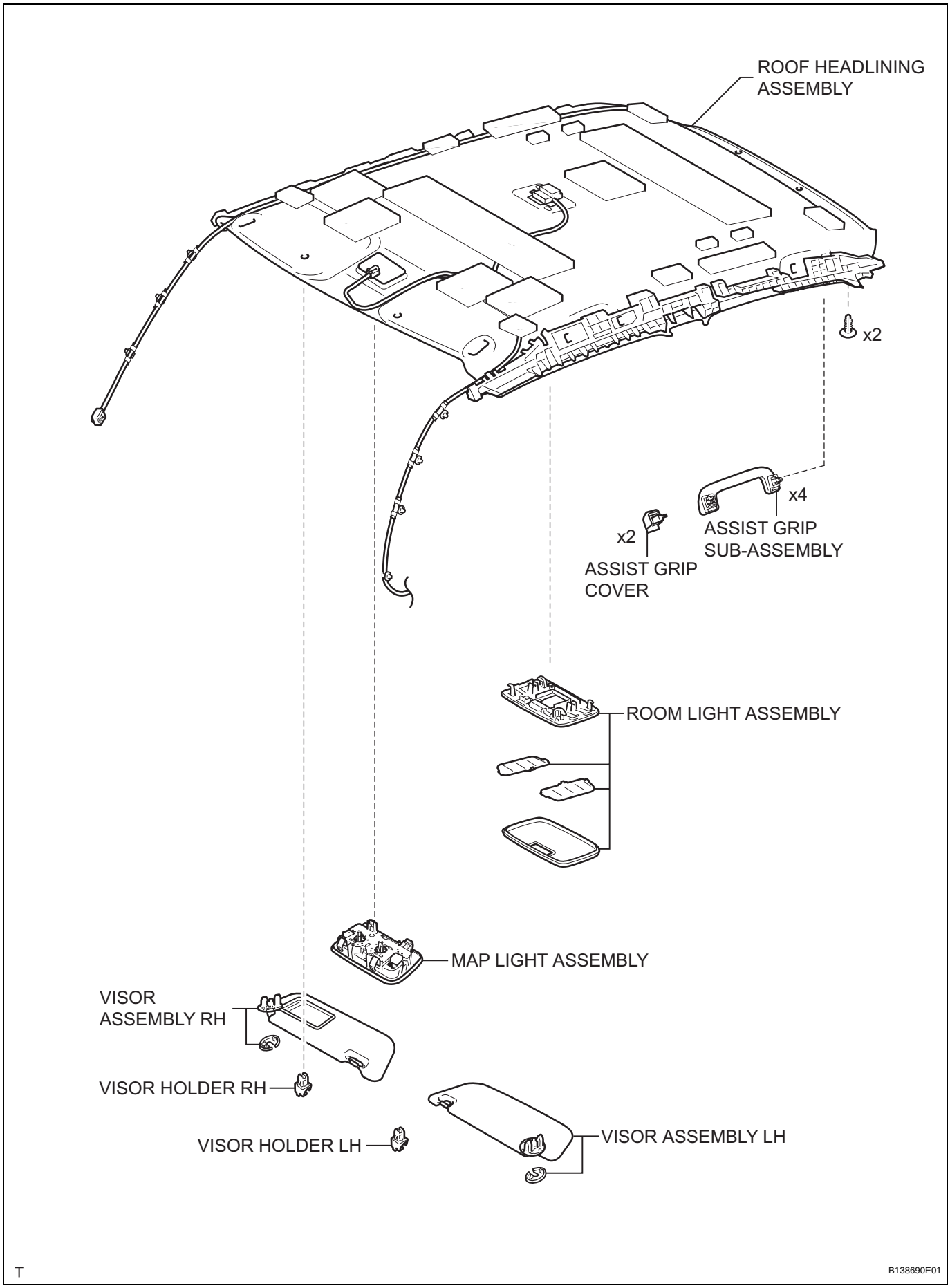
ROOF HEADLINING ASSEMBLY
x2
x4
ASSIST GRIP SUB-ASSEMBLY
x2
ASSIST GRIP COVER
ROOM LIGHT ASSEMBLY
MAP LIGHT ASSEMBLY
VISOR ASSEMBLY RH
VISOR HOLDER RH
VISOR HOLDER LH
VISOR ASSEMBLY LH
T
B138690E01

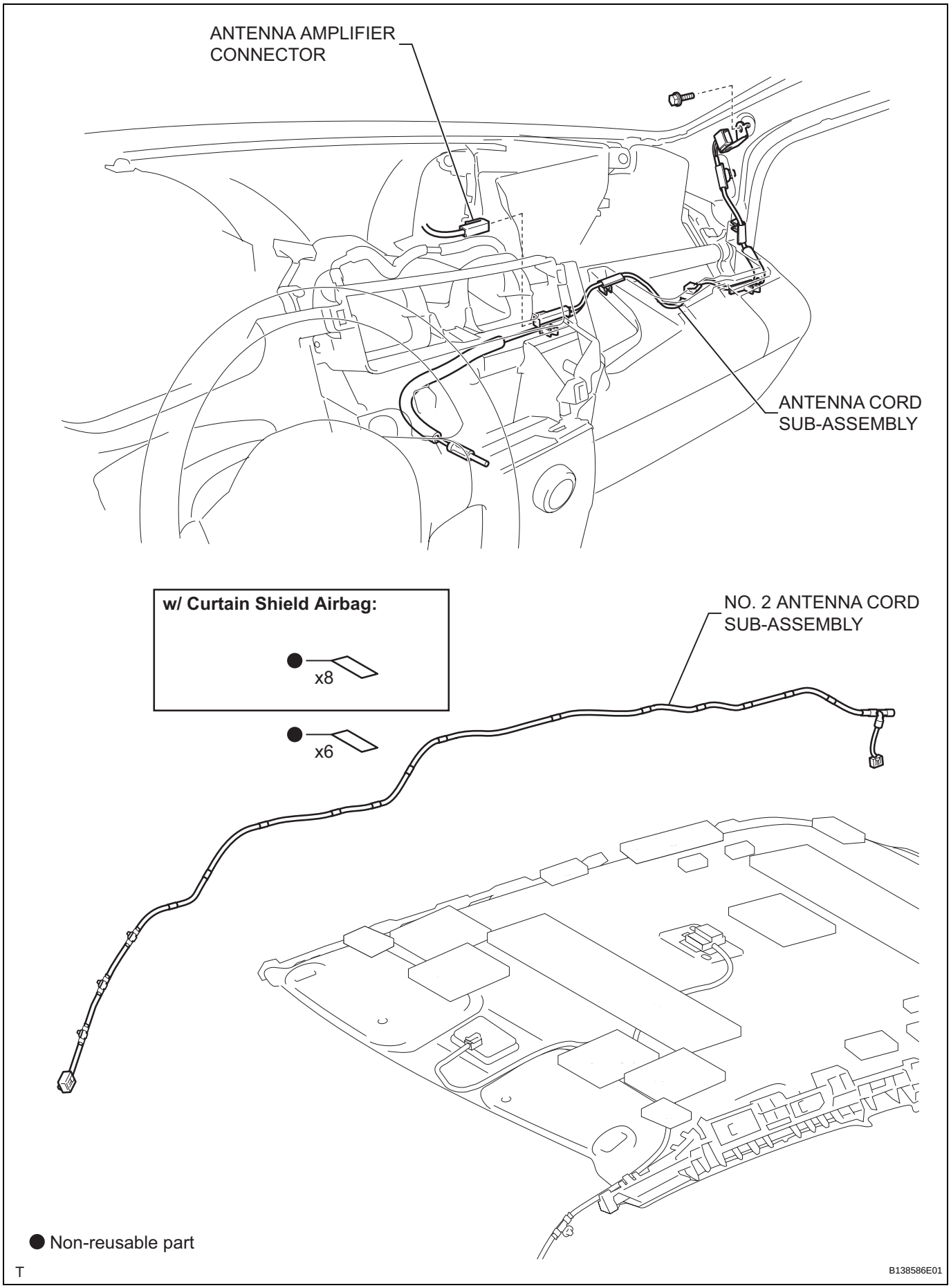
ANTENNA AMPLIFIER CONNECTOR
ANTENNA CORD SUB-ASSEMBLY
w/ Curtain Shield Airbag:
x8
x6
NO. 2 ANTENNA CORD SUB-ASSEMBLY
● Non-reusable part
T
B138586E01

REMOVAL

CAUTION:
Some of these service operations affect the SRS airbag system. Read the precautionary notices concerning the SRS airbag system before servicing (See page RS-1).

1. **DISCONNECT CABLE FROM NEGATIVE BATTERY TERMINAL**
   CAUTION:
   Wait for at least 90 seconds after disconnecting the cable to prevent the airbag from working.
2. **REMOVE REAR SEAT CUSHION COVER PAD SUB-ASSEMBLY**
   (a) for 60/40 Split Seat Type:
   (1) Remove the rear seat cushion cover pad sub-assembly (See page SE-46).
   (b) for Fixed Seat Type:
   (1) Remove the rear seat cushion cover pad sub-assembly (See page SE-106).
3. **REMOVE REAR SEATBACK ASSEMBLY RH (for 60/40 Split Seat Type) (See page SE-57)**
4. **REMOVE REAR SEATBACK ASSEMBLY LH (for 60/40 Split Seat Type) (See page SE-46)**
5. **REMOVE REAR SEATBACK ASSEMBLY (for Fixed Seat Type) (See page SE-106)**
6. **REMOVE LUGGAGE COMPARTMENT FLOOR MAT (for 60/40 Split Seat Type) (See page ED-133)**
7. **REMOVE SPARE WHEEL COVER ASSEMBLY (for 60/40 Split Seat Type) (See page ED-133)**
8. **REMOVE LUGGAGE COMPARTMENT TRIM INNER PAD (for 60/40 Split Seat Type) (See page ED-134)**
9. **REMOVE FRONT DOOR SCUFF PLATE RH (See page IR-14)**
10. **REMOVE FRONT DOOR SCUFF PLATE LH (See page IR-14)**
11. **REMOVE INSTRUMENT PANEL UNDER COVER SUB-ASSEMBLY RH (See page IR-14)**
12. **REMOVE INSTRUMENT PANEL UNDER COVER SUB-ASSEMBLY LH (See page IR-14)**
13. **REMOVE COWL SIDE TRIM BOARD RH (See page IR-15)**
14. **REMOVE COWL SIDE TRIM BOARD LH (See page IR-15)**
15. **REMOVE FRONT DOOR OPENING TRIM WEATHERSTRIP RH (See page IR-15)**
16. **REMOVE FRONT DOOR OPENING TRIM WEATHERSTRIP LH (See page IR-15)**

17. **REMOVE REAR DOOR SCUFF PLATE RH (See page IR-15)**
18. **REMOVE REAR DOOR SCUFF PLATE LH (See page IR-15)**
19. **REMOVE REAR DOOR OPENING TRIM WEATHERSTRIP RH (See page IR-15)**
20. **REMOVE REAR DOOR OPENING TRIM WEATHERSTRIP LH (See page IR-15)**
21. **REMOVE REAR SEAT SIDE COVER RH (See page IR-16)**
22. **REMOVE REAR SEAT SIDE COVER LH (See page IR-16)**
23. **REMOVE ROOF SIDE INNER GARNISH RH (See page IR-16)**
24. **REMOVE ROOF SIDE INNER GARNISH LH (See page IR-16)**
25. **REMOVE CENTER PILLAR LOWER GARNISH RH (See page IR-16)**
26. **REMOVE CENTER PILLAR LOWER GARNISH LH (See page IR-16)**
27. **REMOVE SEAT BELT ANCHOR COVER CAP (See page IR-17)**
28. **REMOVE FRONT SEAT OUTER BELT ASSEMBLY RH (See page IR-17)**
29. **REMOVE FRONT SEAT OUTER BELT ASSEMBLY LH (See page IR-17)**
30. **REMOVE CENTER PILLAR UPPER GARNISH RH (See page IR-17)**
31. **REMOVE CENTER PILLAR UPPER GARNISH LH (See page IR-17)**
32. **REMOVE FRONT PILLAR GARNISH RH (See page IR-18)**
33. **REMOVE FRONT PILLAR GARNISH LH (See page IR-19)**
34. **REMOVE INSTRUMENT PANEL LOWER CENTER FINISH PANEL (See page ME-138)**
35. **REMOVE INSTRUMENT PANEL FINISH PANEL END RH (See page ME-138)**
36. **REMOVE INSTRUMENT PANEL FINISH PANEL END LH (See page ME-138)**
37. **REMOVE INSTRUMENT CLUSTER FINISH PANEL (See page ME-139)**
38. **REMOVE COMBINATION METER ASSEMBLY (See page ME-139)**

39. **REMOVE GLOVE COMPARTMENT DOOR ASSEMBLY (See page IP-6)**

40. **REMOVE UPPER INSTRUMENT PANEL SUB-ASSEMBLY (See page IP-6)**

41. **REMOVE INSTRUMENT CLUSTER CENTER FINISH PANEL SUB-ASSEMBLY (except Integrated with Panel) (See page IP-43)**

42. **REMOVE RADIO RECEIVER ASSEMBLY (See page AV-38)**

43. **REMOVE ANTENNA CORD SUB-ASSEMBLY**
    (a) Remove the bolt, the hook and the bracket.
    (b) Using a clip remover, remove the clamp.
    (c) Disconnect the antenna amplifier connector.
    (d) Remove the 5 clamps and the antenna cord.

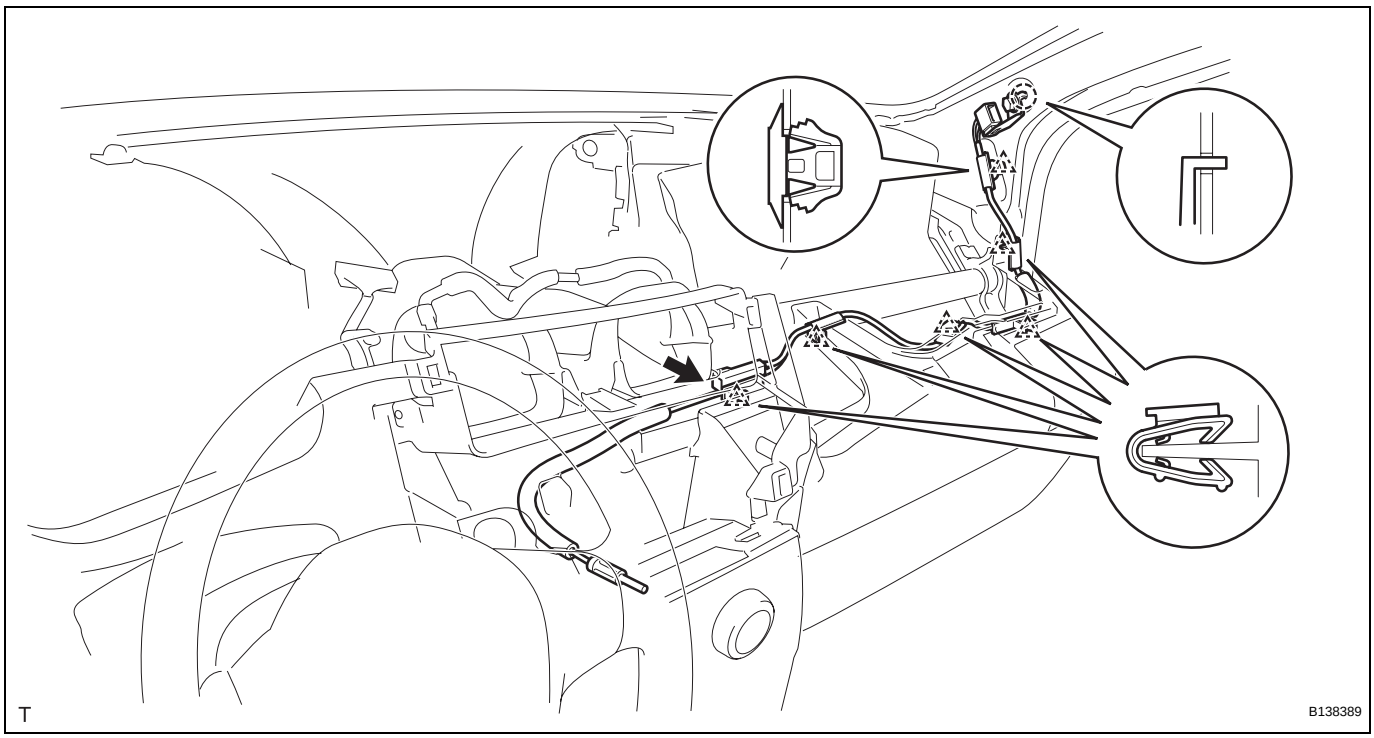

44. **REMOVE ASSIST GRIP COVER (See page IR-21)**

45. **REMOVE ASSIST GRIP SUB-ASSEMBLY (See page IR-21)**

46. **REMOVE VISOR ASSEMBLY RH (See page IR-21)**

47. **REMOVE VISOR ASSEMBLY LH (See page IR-22)**

48. **REMOVE VISOR HOLDER RH (See page IR-22)**

49. **REMOVE VISOR HOLDER LH (See page IR-22)**

50. **REMOVE ROOM LIGHT ASSEMBLY (See page IR-22)**

51. **REMOVE MAP LIGHT ASSEMBLY (See page IR-23)**

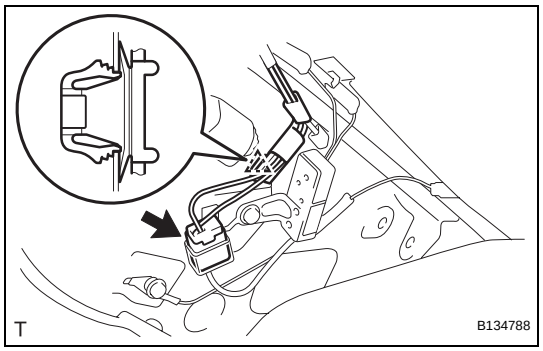

52. REMOVE ROOF HEADLINING ASSEMBLY

(a) Using a clip remover, remove the clamp.

(b) Disconnect the antenna connector.

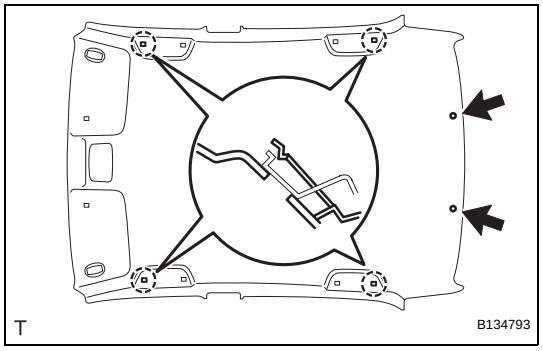

(c) w/ Curtain Shield Airbag:

(1) Using a clip remover, remove the 2 clips.

(2) Disengage the 4 hooks and remove the roof headlining.

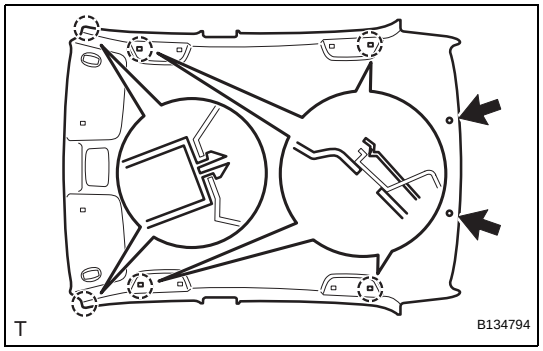

(d) w/o Curtain Shield Airbag:

(1) Using a clip remover, remove the 2 clips.

(2) Disengage the 2 claws and 4 hooks and remove the roof headlining.

53. REMOVE NO. 2 ANTENNA CORD SUB-ASSEMBLY

(a) w/ Curtain Shield Airbag:

(1) Remove the 8 pieces of tape.

(2) Remove the No. 2 antenna cord from the 4 claws of the front and rear side real spacers.

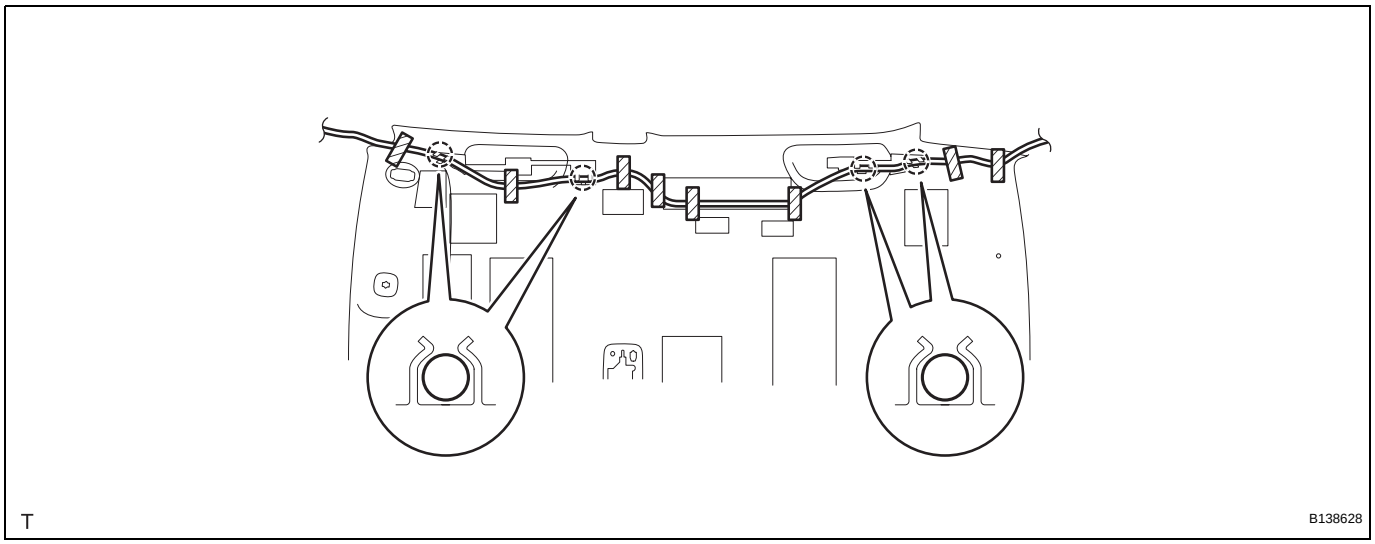

(b) w/ Curtain Shield Airbag:

(1) Remove the 6 pieces of tape.

(2) Remove the No. 2 antenna cord from the 6 claws of the front and rear side real spacers.

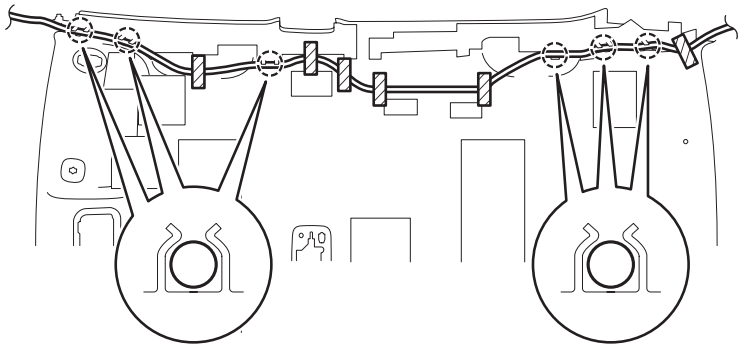

T

B138629

INSTALLATION

CAUTION:
Some of these service operations affect the SRS airbag system. Read the precautionary notices concerning the SRS airbag system before servicing (See page RS-1).

1. INSTALL NO. 2 ANTENNA CORD SUB-ASSEMBLY

(a) w/ Curtain Shield Airbag:

(1) Install the antenna cord positioning tapes into the 4 claws of the front and rear side rail spacers.

(2) Align the antenna cord positioning tapes with the markings on the roof headlining.

(3) Install the antenna cord onto the roof headlining with 8 new pieces of tape.

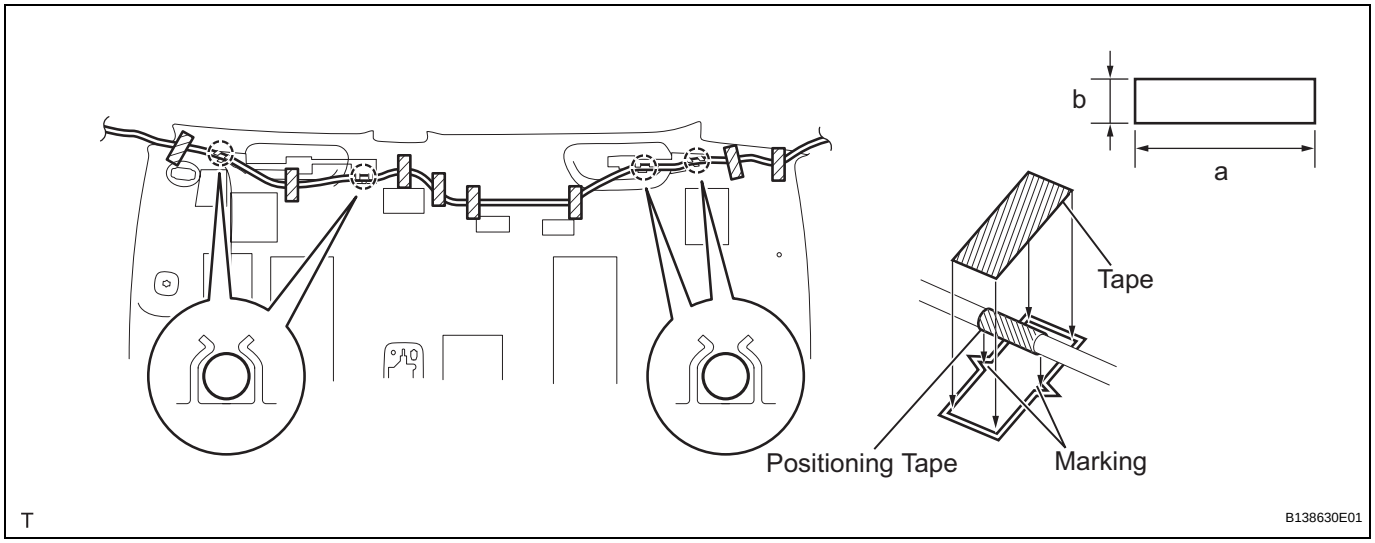

Tape size:

Mark	Measurement
a	80 mm (3.15 in.)
b	20 mm (0.787 in.)

NOTICE:
- **Apply the tape securely in place.**
- **Do not touch the adhesive surface when applying the tape to prevent adhesion failure.**

(b) w/o Curtain Shield Airbag:

(1) Install the antenna cord positioning tapes into the 6 claws of the front and rear side rail spacers.

(2) Align the antenna cord positioning tapes with the markings on the roof headlining.

AV

(3) Install the antenna cord onto the roof headlining with 6 new pieces of tape.

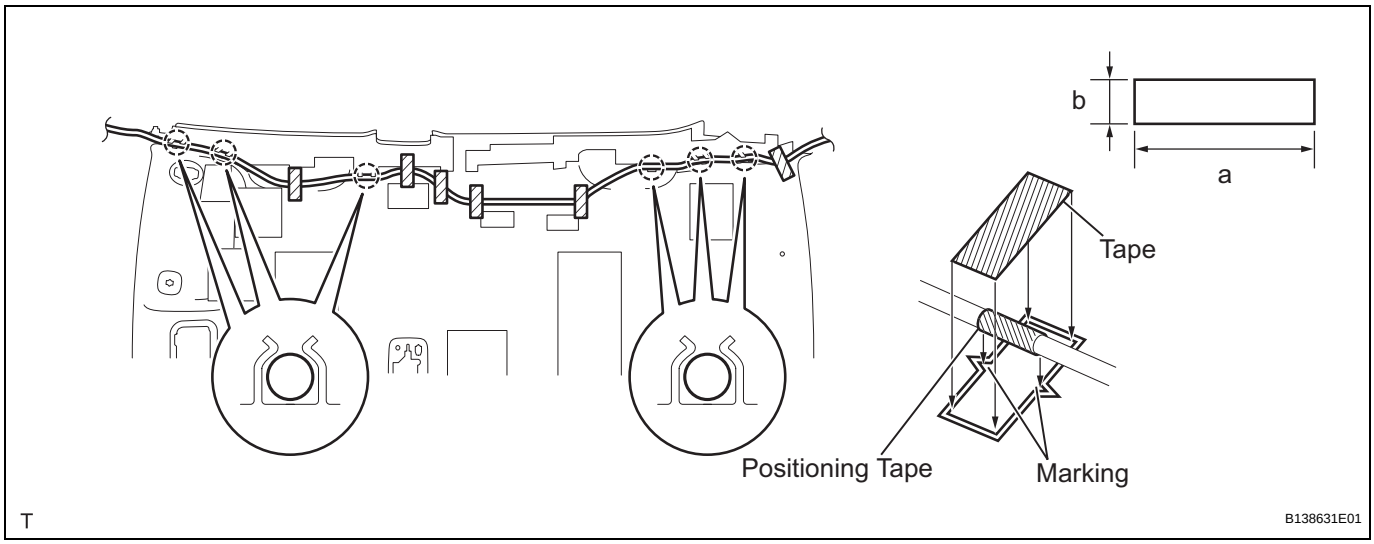

Tape size:

Mark	Measurement
a	80 mm (3.15 in.)
b	20 mm (0.787 in.)

NOTICE:
- **Apply the tape securely in place.**
- **Do not touch the adhesive surface when applying the tape to prevent adhesion failure.**

2. INSTALL ROOF HEADLINING ASSEMBLY

(a) w/ Curtain Shield Airbag:
(1) Engage the 4 hooks and install the roof headlining.
(2) Install the 2 clips.

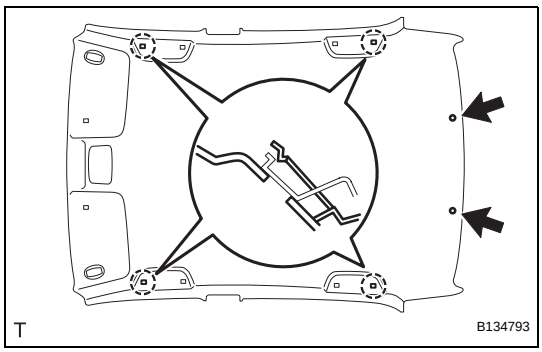

(b) w/o Curtain Shield Airbag:
(1) Engage the 2 claws and 4 hooks and install the roof headlining.
(2) Install the 2 clips.

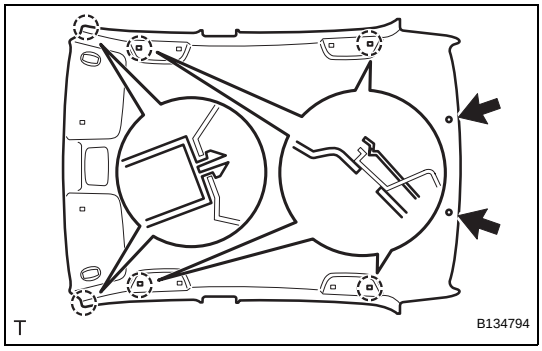

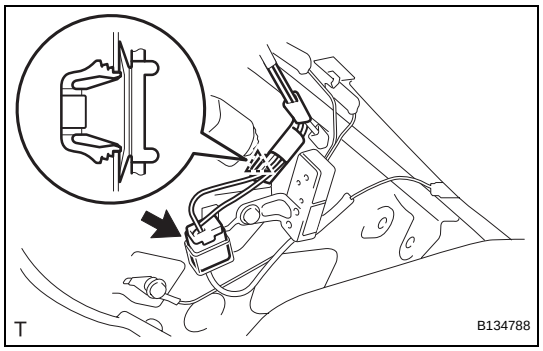

(c) Connect the antenna connector.
(d) Install the clamp.

3. **INSTALL MAP LIGHT ASSEMBLY (See page IR-26)**
4. **INSTALL ROOM LIGHT ASSEMBLY (See page IR-27)**
5. **INSTALL VISOR HOLDER RH (See page IR-28)**
6. **INSTALL VISOR HOLDER LH (See page IR-28)**
7. **INSTALL VISOR ASSEMBLY RH (See page IR-28)**
8. **INSTALL VISOR ASSEMBLY LH (See page IR-28)**
9. **INSTALL ASSIST GRIP SUB-ASSEMBLY (See page IR-28)**
10. **INSTALL ASSIST GRIP COVER (See page IR-29)**
11. **INSTALL ANTENNA CORD SUB-ASSEMBLY**
    (a) Install the antenna cord with the 5 clamps.
    (b) Connect the antenna amplifier connector.
    (c) Insert the hook into the body hole and install the bracket with the bolt.

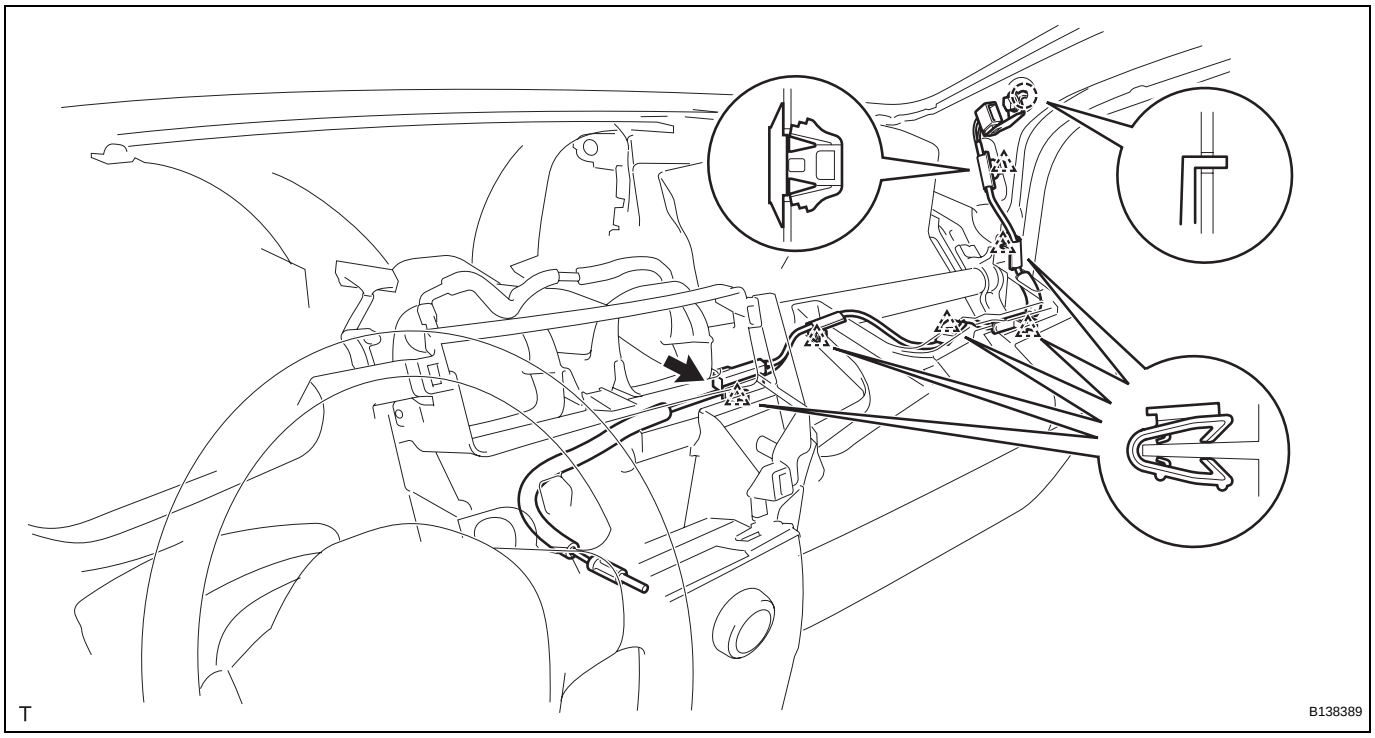

12. **INSTALL RADIO RECEIVER ASSEMBLY (See page AV-40)**
13. **INSTALL INSTRUMENT CLUSTER CENTER FINISH PANEL SUB-ASSEMBLY (except Integrated with Panel) (See page IP-56)**
14. **INSTALL UPPER INSTRUMENT PANEL SUB-ASSEMBLY (See page IP-11)**
15. **INSTALL GLOVE COMPARTMENT DOOR ASSEMBLY (See page IP-13)**

16. **INSTALL COMBINATION METER ASSEMBLY (See page ME-140)**
17. **INSTALL INSTRUMENT CLUSTER FINISH PANEL (See page ME-140)**
18. **INSTALL INSTRUMENT PANEL FINISH PANEL END RH (See page ME-141)**
19. **INSTALL INSTRUMENT PANEL FINISH PANEL END LH (See page ME-141)**
20. **INSTALL INSTRUMENT PANEL LOWER CENTER FINISH PANEL (See page ME-142)**
21. **INSTALL FRONT PILLAR GARNISH RH (See page IR-29)**
22. **INSTALL FRONT PILLAR GARNISH LH (See page IR-30)**
23. **INSTALL CENTER PILLAR UPPER GARNISH RH (See page IR-31)**
24. **INSTALL CENTER PILLAR UPPER GARNISH LH (See page IR-31)**
25. **INSTALL FRONT SEAT OUTER BELT ASSEMBLY RH (See page IR-31)**
26. **INSTALL FRONT SEAT OUTER BELT ASSEMBLY LH (See page IR-31)**
27. **INSTALL SEAT BELT ANCHOR COVER CAP (See page IR-32)**
28. **INSTALL CENTER PILLAR LOWER GARNISH RH (See page IR-16)**
29. **INSTALL CENTER PILLAR LOWER GARNISH LH (See page IR-32)**
30. **INSTALL ROOF SIDE INNER GARNISH RH (See page IR-32)**
31. **INSTALL ROOF SIDE INNER GARNISH LH (See page IR-33)**
32. **INSTALL REAR SEAT SIDE COVER RH (See page IR-33)**
33. **INSTALL REAR SEAT SIDE COVER LH (See page IR-33)**
34. **INSTALL REAR DOOR OPENING TRIM WEATHERSTRIP RH (See page IR-33)**
35. **INSTALL REAR DOOR OPENING TRIM WEATHERSTRIP LH (See page IR-33)**
36. **INSTALL REAR DOOR SCUFF PLATE RH (See page IR-34)**
37. **INSTALL REAR DOOR SCUFF PLATE LH (See page IR-34)**

38. INSTALL FRONT DOOR OPENING TRIM WEATHERSTRIP RH (See page IR-34)

39. INSTALL FRONT DOOR OPENING TRIM WEATHERSTRIP LH (See page IR-34)

40. INSTALL COWL SIDE TRIM BOARD RH (See page IR-34)

41. INSTALL COWL SIDE TRIM BOARD LH (See page IR-34)

42. INSTALL INSTRUMENT PANEL UNDER COVER SUB-ASSEMBLY RH (See page IR-35)

43. INSTALL INSTRUMENT PANEL UNDER COVER SUB-ASSEMBLY LH (See page IR-35)

44. INSTALL FRONT DOOR SCUFF PLATE RH (See page IR-35)

45. INSTALL FRONT DOOR SCUFF PLATE LH (See page IR-35)

46. INSTALL LUGGAGE COMPARTMENT TRIM INNER PAD (for 60/40 Split Seat Type) (See page ED-136)

47. INSTALL SPARE WHEEL COVER ASSEMBLY (for 60/40 Split Seat Type) (See page ED-137)

48. INSTALL LUGGAGE COMPARTMENT FLOOR MAT (for 60/40 Split Seat Type) (See page ED-137)

49. INSTALL REAR SEATBACK ASSEMBLY RH (for 60/40 Split Seat Type) (See page SE-65)

50. INSTALL REAR SEATBACK ASSEMBLY LH (for 60/40 Split Seat Type) (See page SE-52)

51. INSTALL REAR SEATBACK ASSEMBLY (for Fixed Seat Type) (See page SE-108)

52. INSTALL REAR SEAT CUSHION COVER PAD SUB-ASSEMBLY

(a) for 60/40 Split Seat Type:

(1) Install the rear seat cushion cover pad sub-assembly (See page SE-53).

(b) for Fixed Seat Type:

(1) Install the rear seat cushion cover pad sub-assembly (See page SE-109).

53. CONNECT CABLE TO NEGATIVE BATTERY TERMINAL
Torque: 5.4 N*m (55 kgf*cm, 48 in.*lbf)

54. INSPECT SRS WARNING LIGHT
(See page RS-31)

RADIO ANTENNA CORD (for Hatchback 5 Door)

COMPONENTS

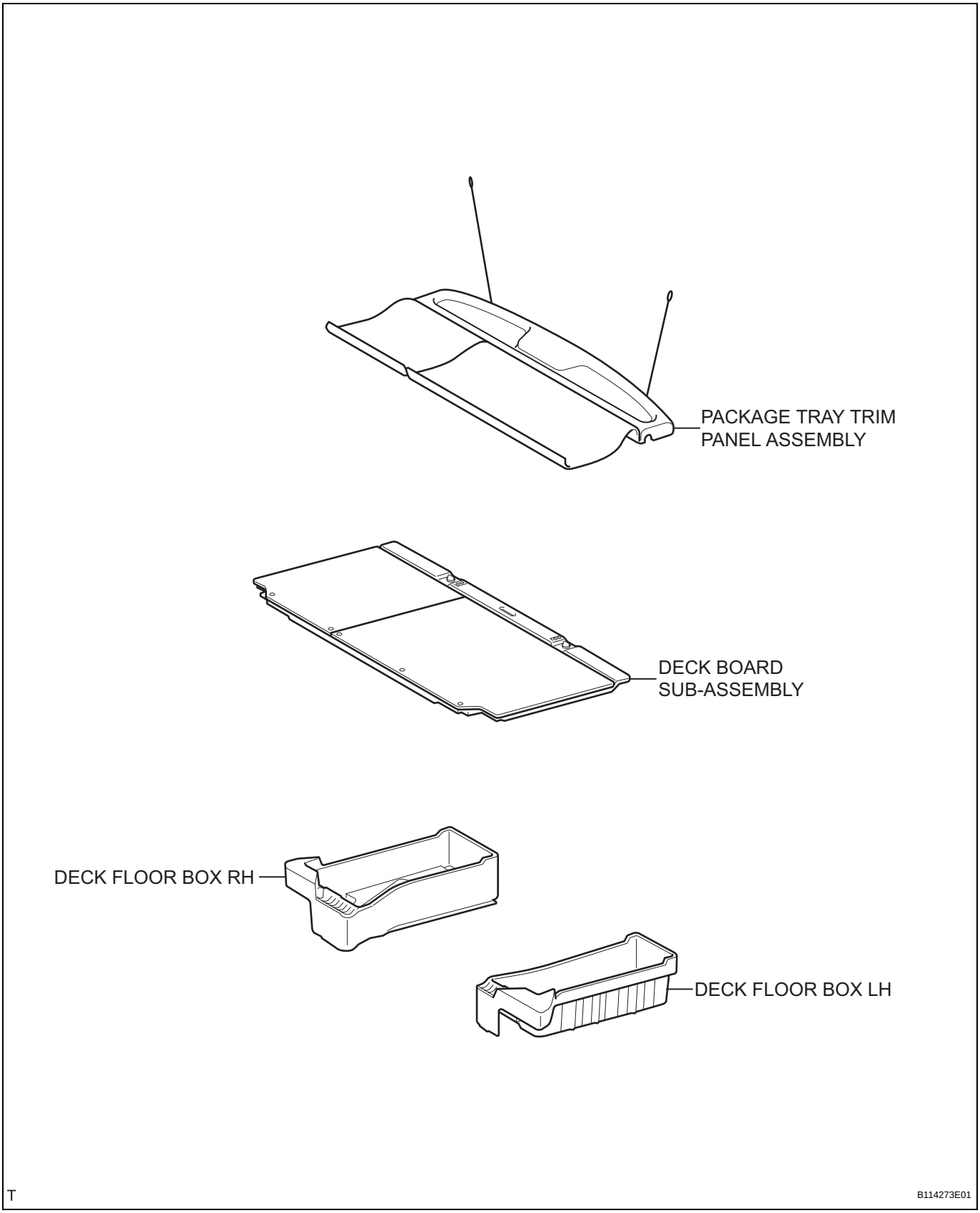

for 60/40 Split Seat Type:

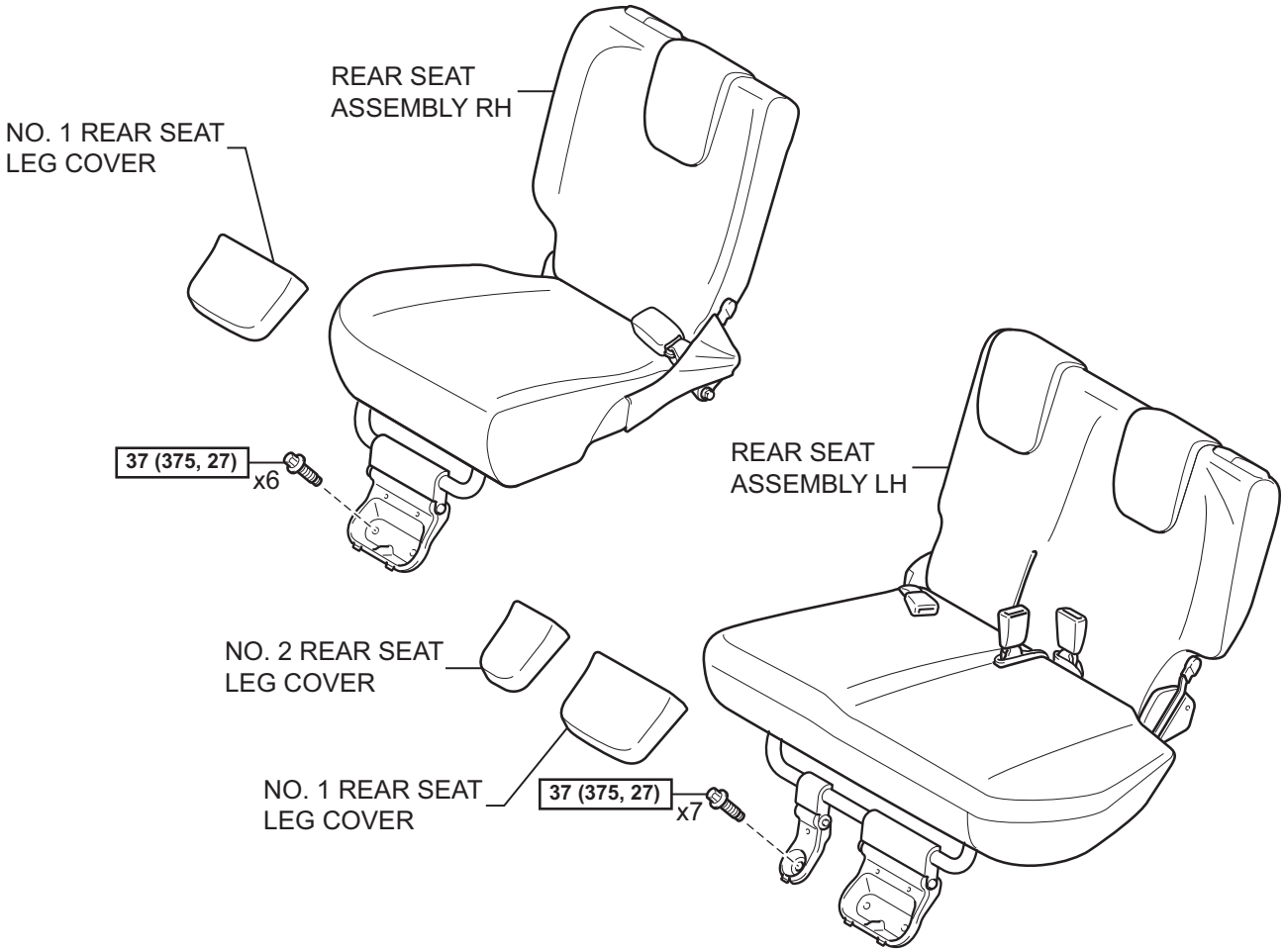

for Hold Down Seat Type:

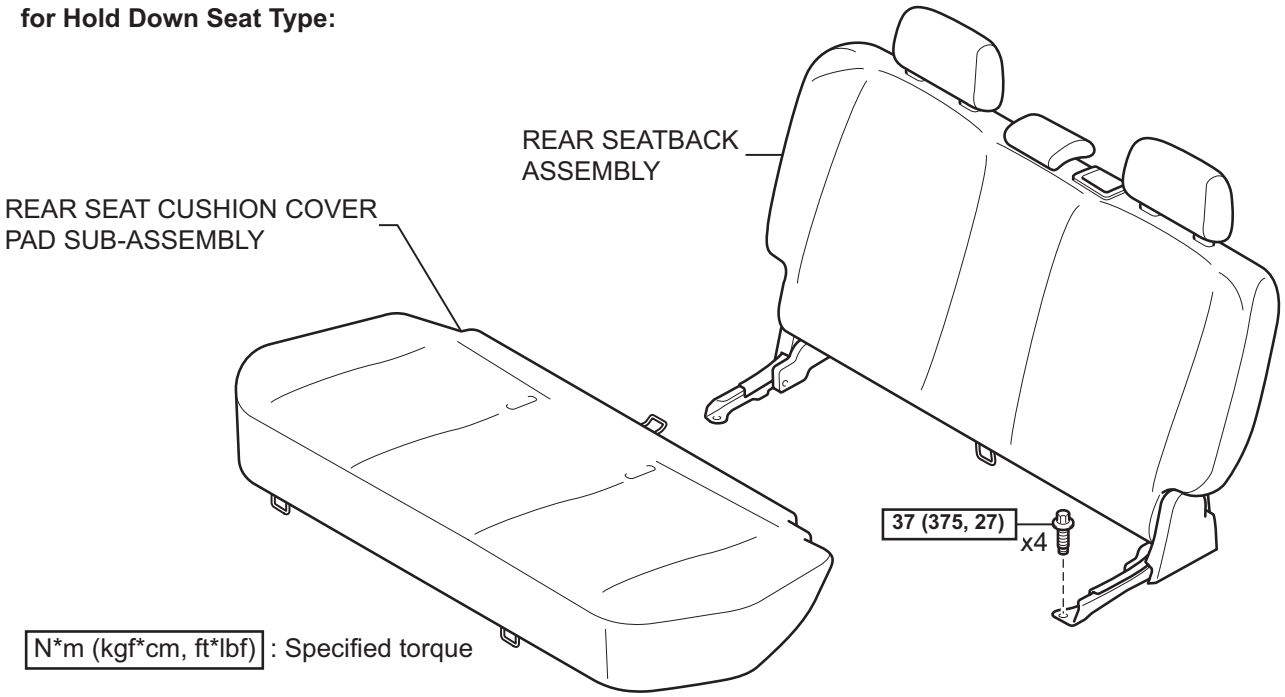

T

B121713E03

AV

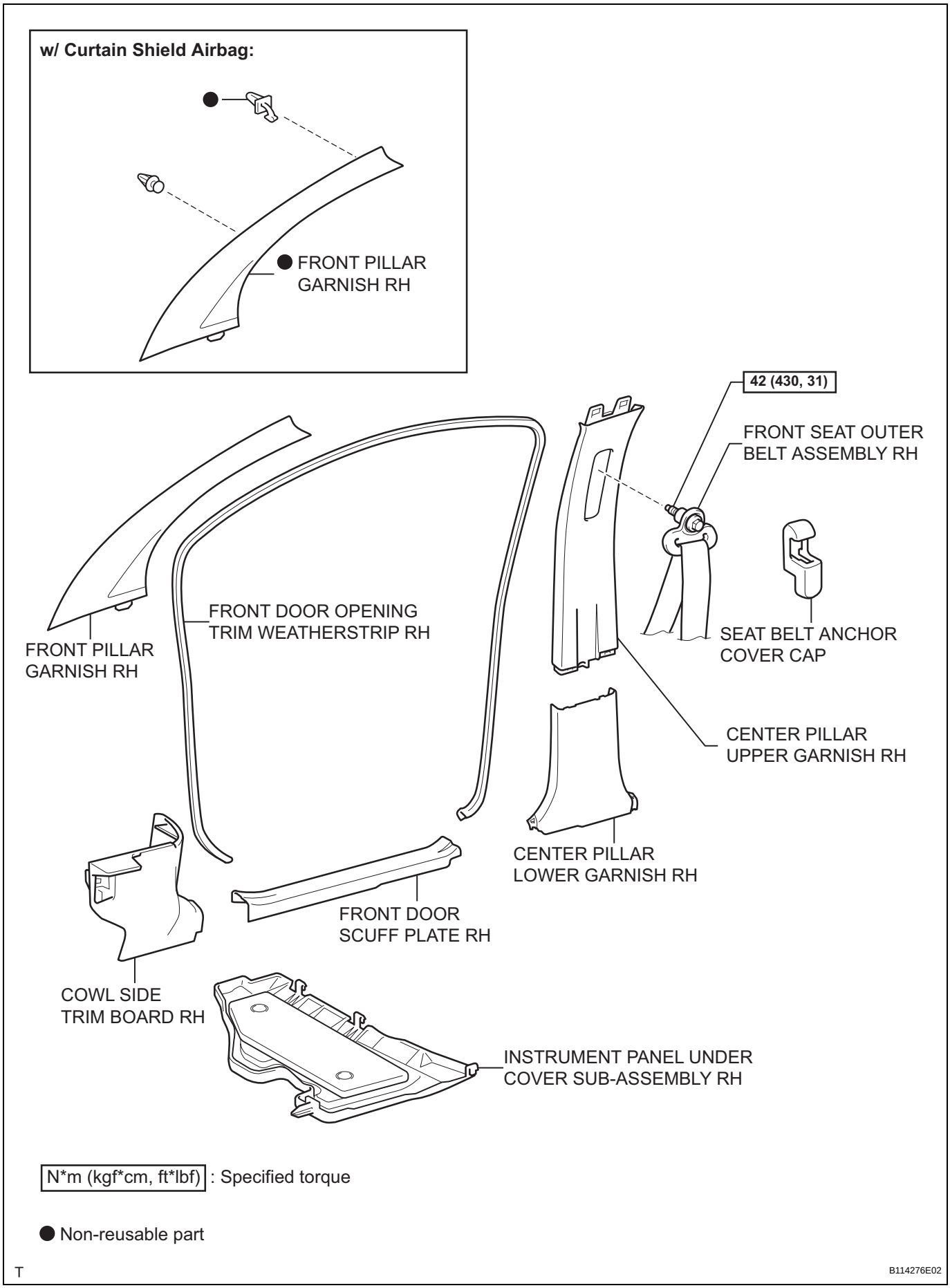
w/ Curtain Shield Airbag:
● FRONT PILLAR GARNISH RH
42 (430, 31)
FRONT SEAT OUTER BELT ASSEMBLY RH
FRONT DOOR OPENING TRIM WEATHERSTRIP RH
FRONT PILLAR GARNISH RH
SEAT BELT ANCHOR COVER CAP
CENTER PILLAR UPPER GARNISH RH
CENTER PILLAR LOWER GARNISH RH
FRONT DOOR SCUFF PLATE RH
COWL SIDE TRIM BOARD RH
INSTRUMENT PANEL UNDER COVER SUB-ASSEMBLY RH
N*m (kgf*cm, ft*lbf) : Specified torque
● Non-reusable part
T
B114276E02

AV

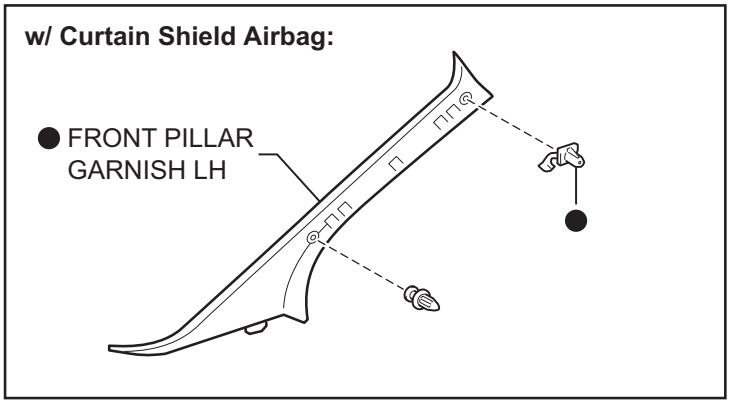

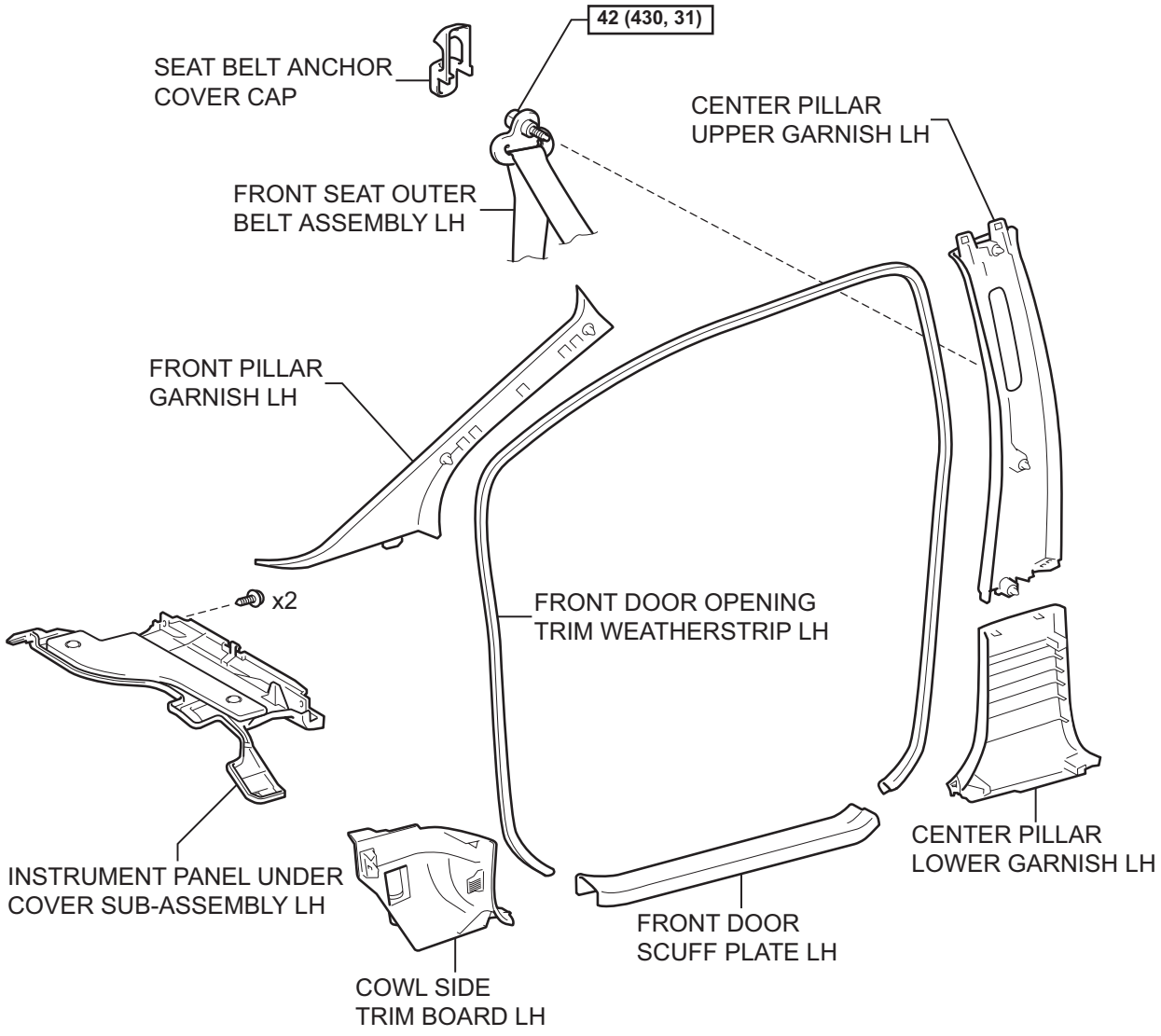

N*m (kgf*cm, ft*lbf) : Specified torque

● Non-reusable part

T

B114277E02

AV

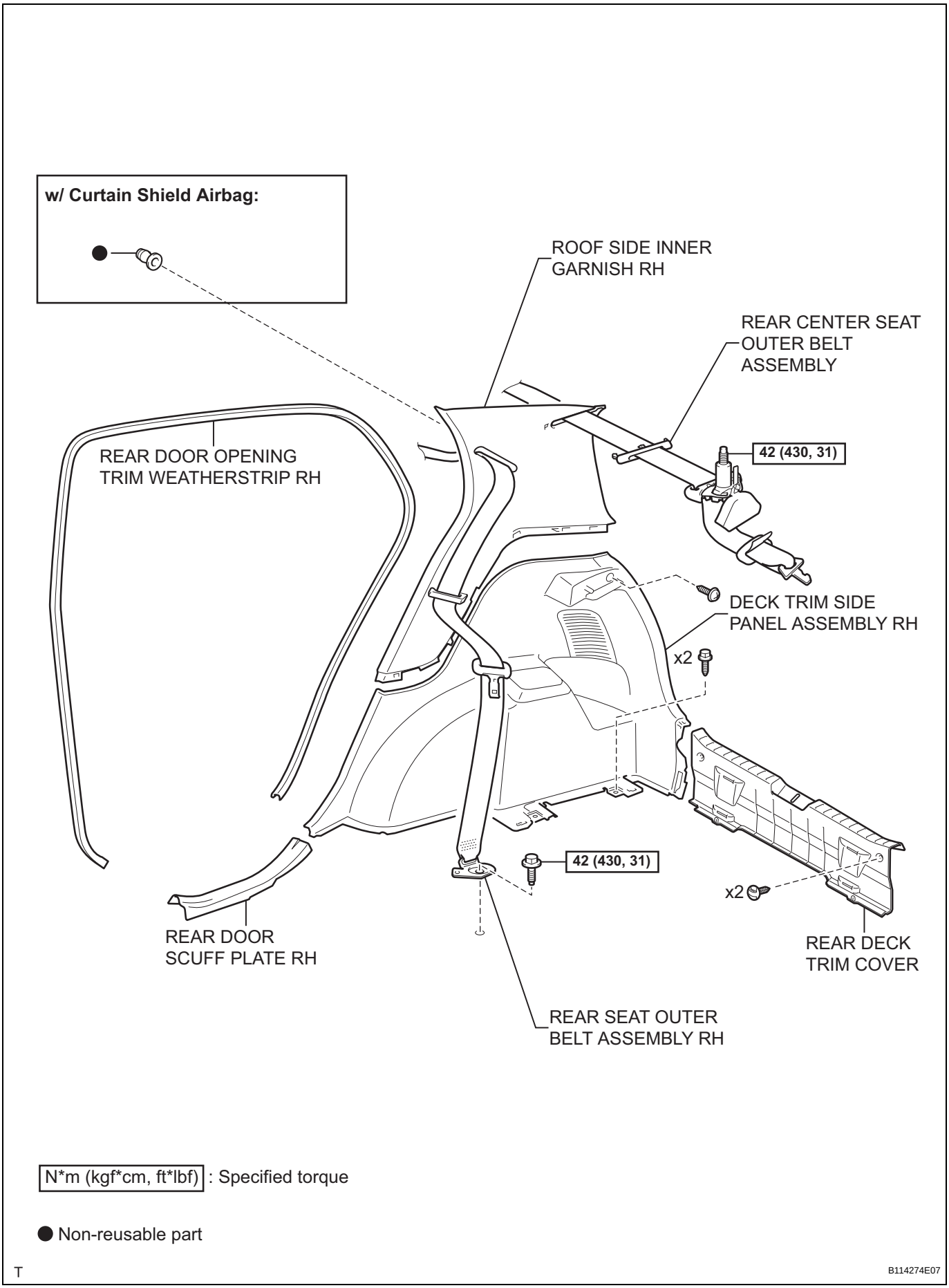
w/ Curtain Shield Airbag:
ROOF SIDE INNER GARNISH RH
REAR CENTER SEAT OUTER BELT ASSEMBLY
42 (430, 31)
REAR DOOR OPENING TRIM WEATHERSTRIP RH
DECK TRIM SIDE PANEL ASSEMBLY RH
x2
42 (430, 31)
x2
REAR DOOR SCUFF PLATE RH
REAR DECK TRIM COVER
REAR SEAT OUTER BELT ASSEMBLY RH
N*m (kgf*cm, ft*lbf) : Specified torque
● Non-reusable part
T
B114274E07

AV

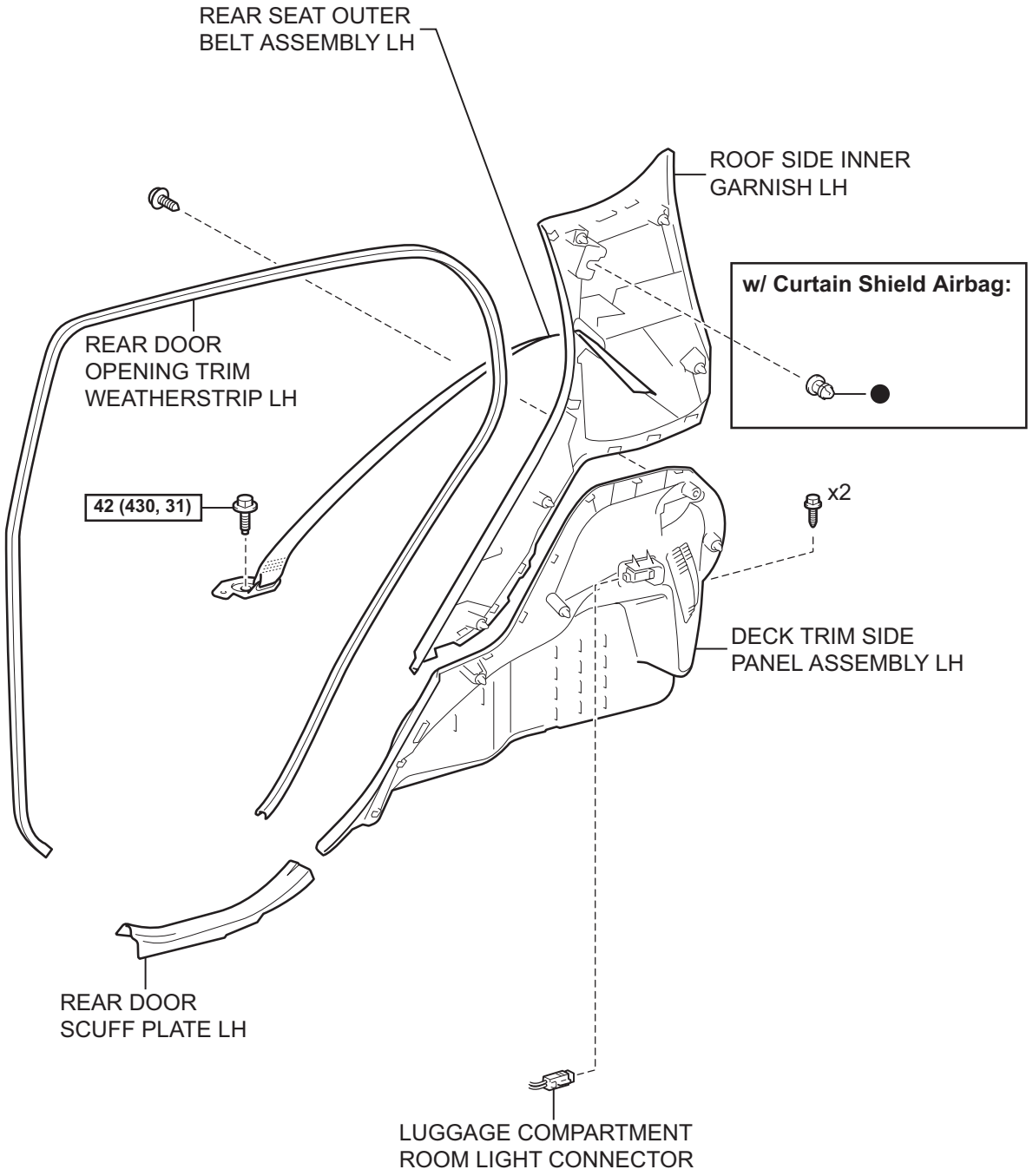

N*m (kgf*cm, ft*lbf) : Specified torque

● Non-reusable part

T

B114275E11

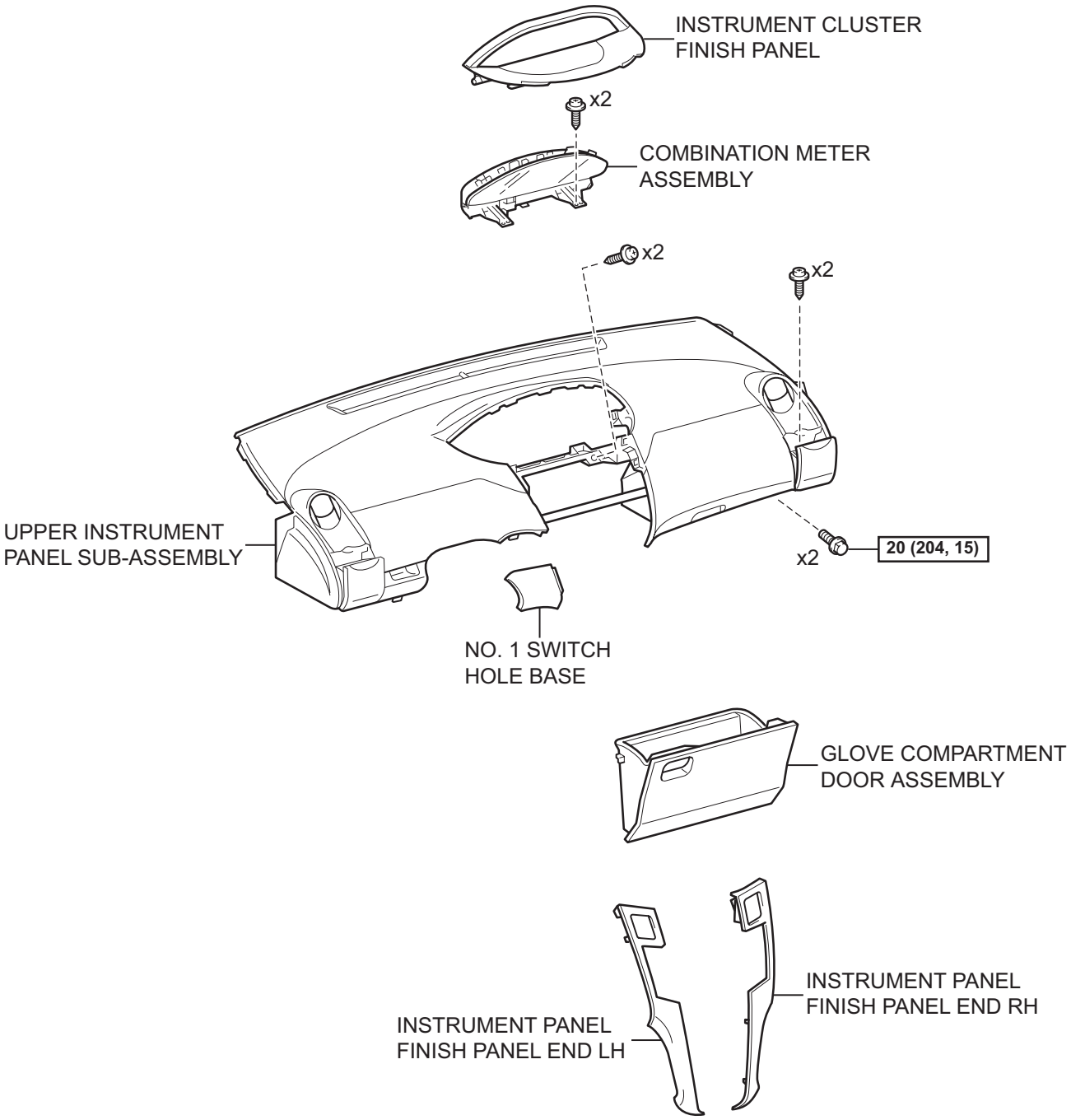

N*m (kgf*cm, ft*lbf) : Specified torque

T

B138684E01

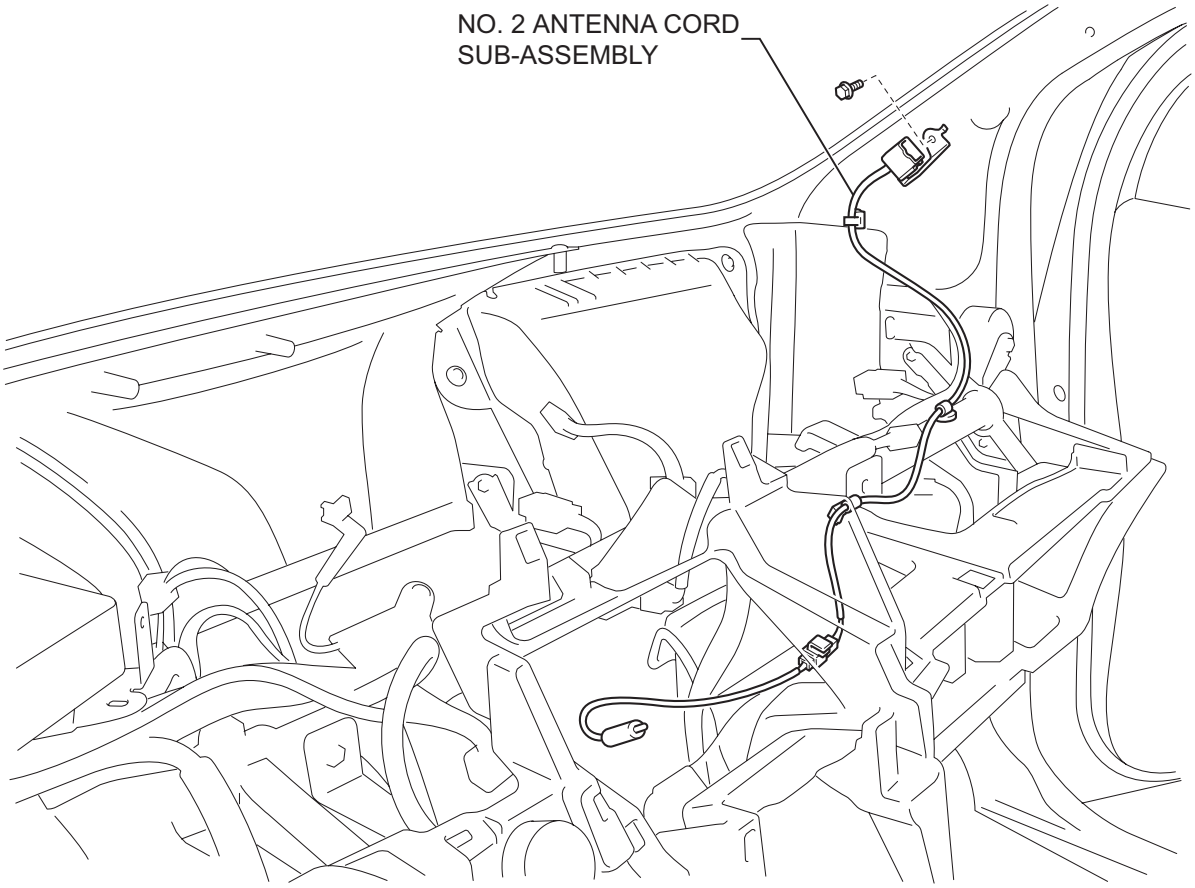

Y

B138685E01

w/ Curtain Shield Airbag:

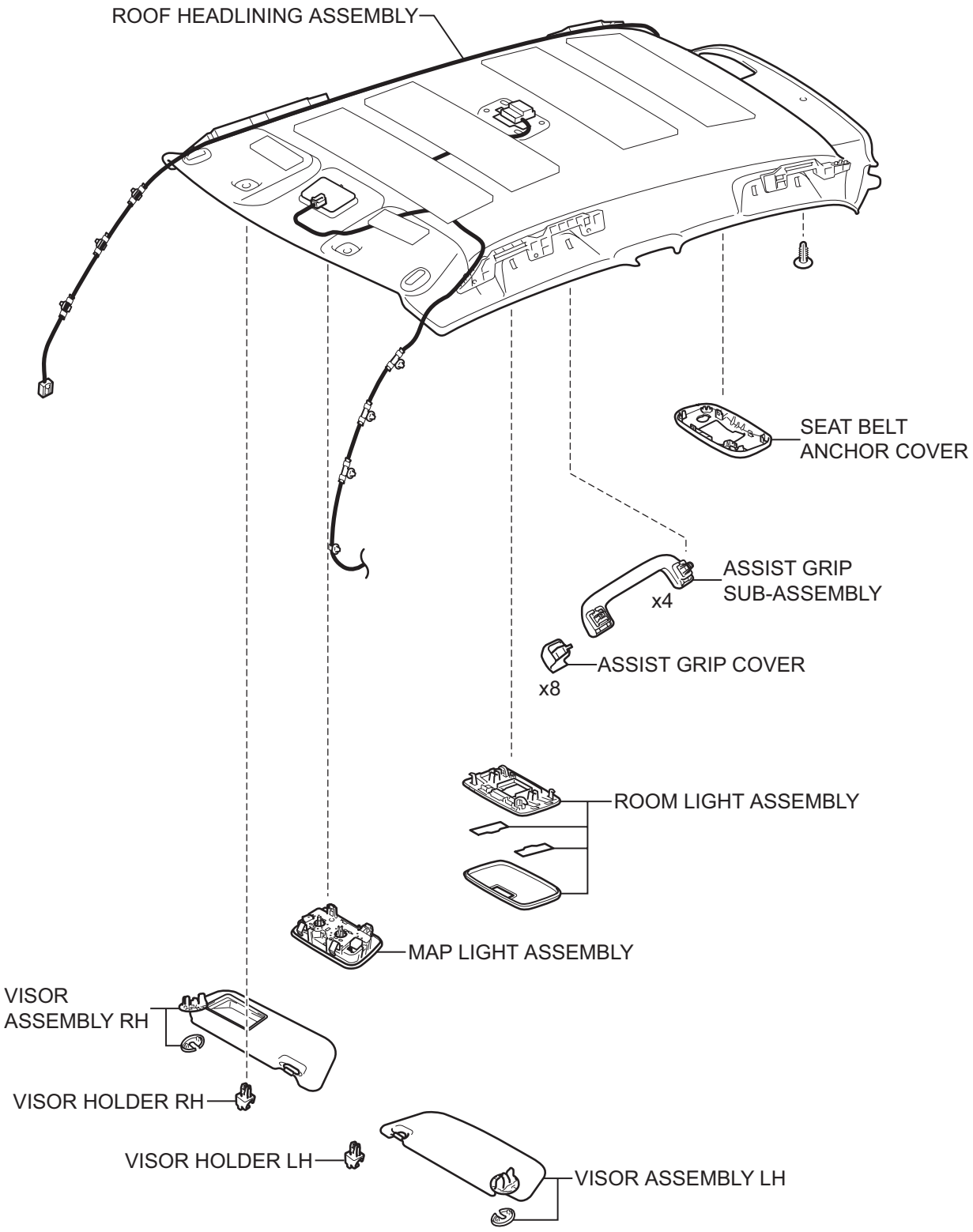

T

B138686E01

w/o Curtain Shield Airbag:

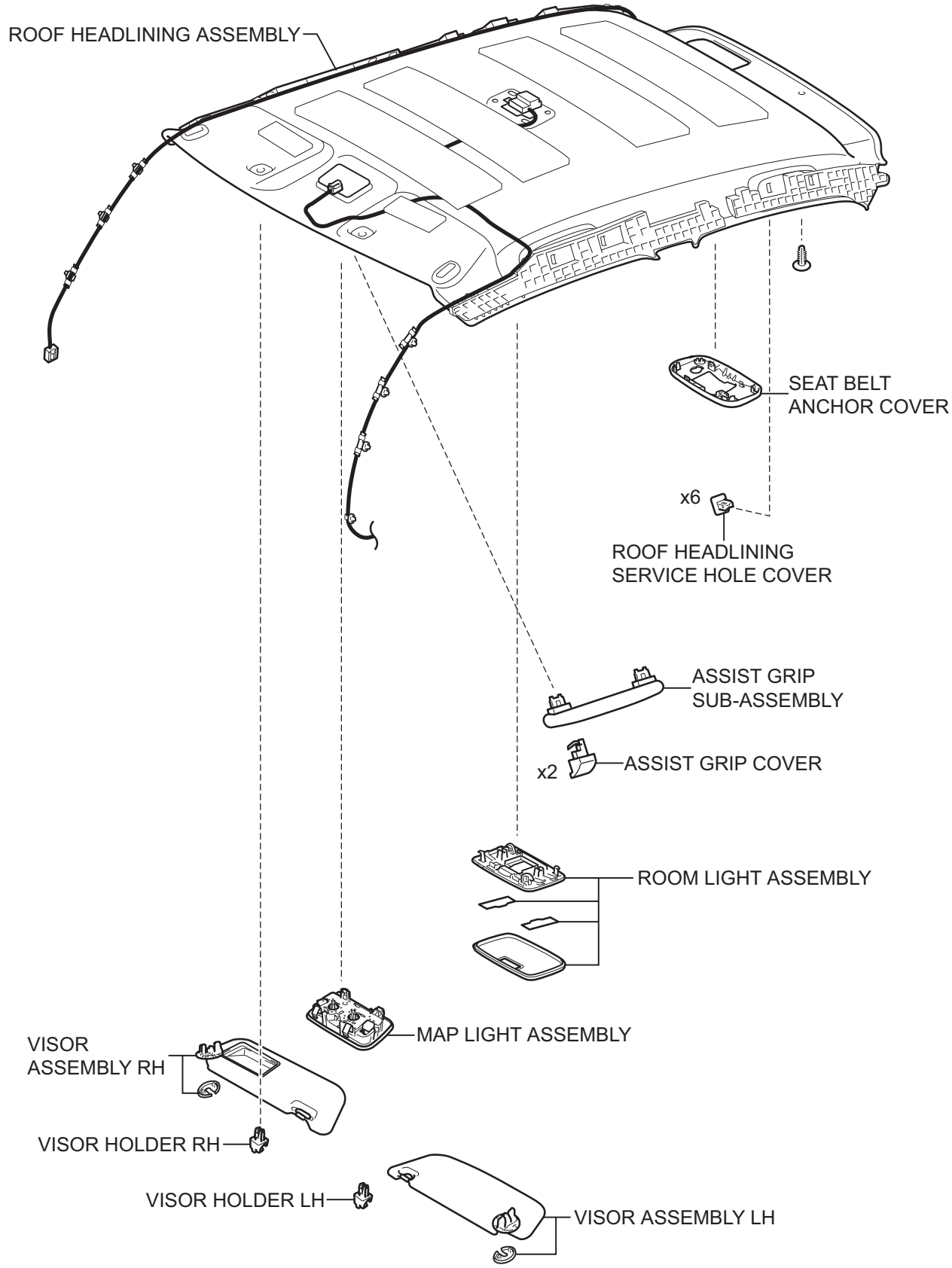

T

B138687E01

w/ Curtain Shield Airbag:

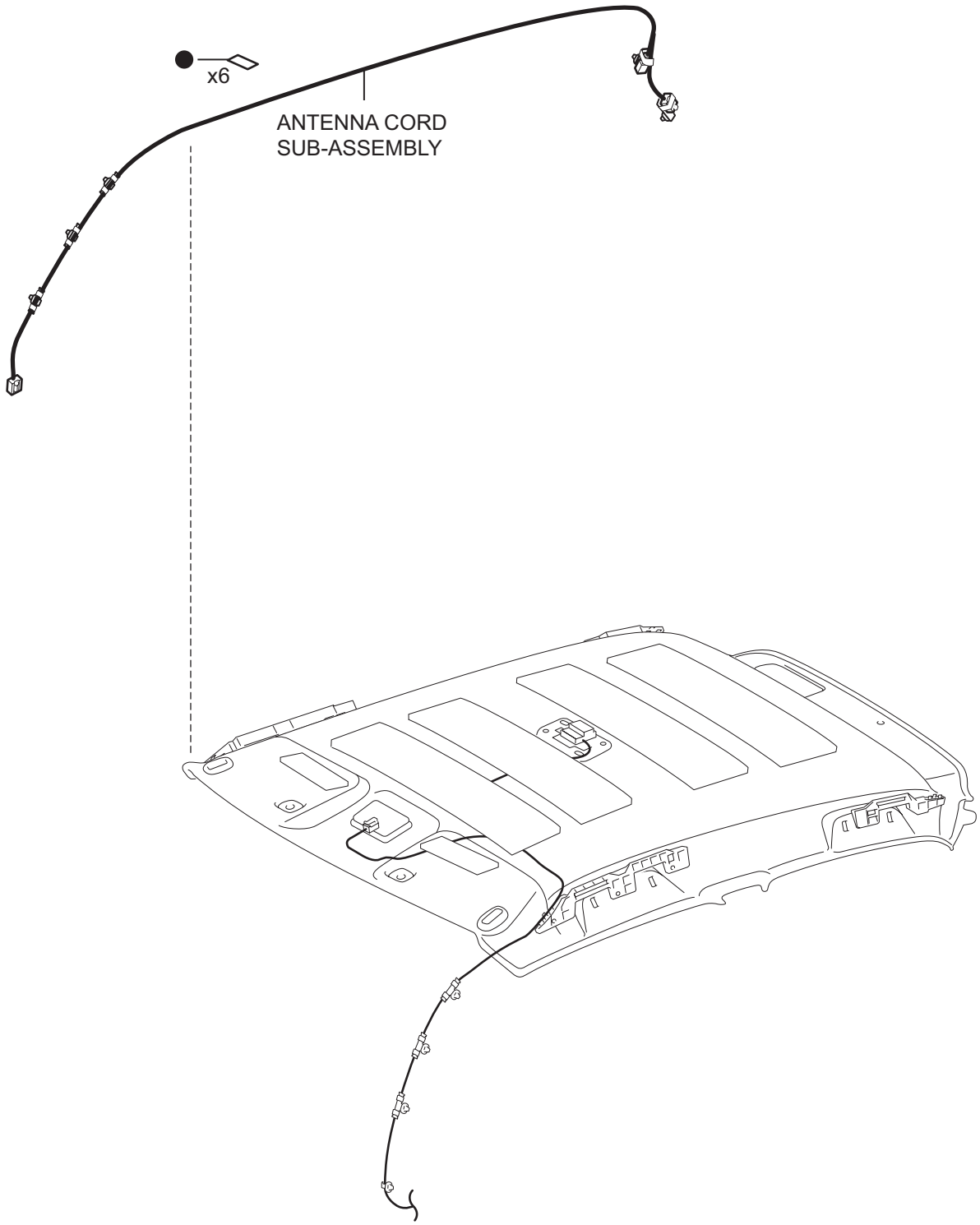

● Non-reusable part

T

B138688E01

w/o Curtain Shield Airbag:

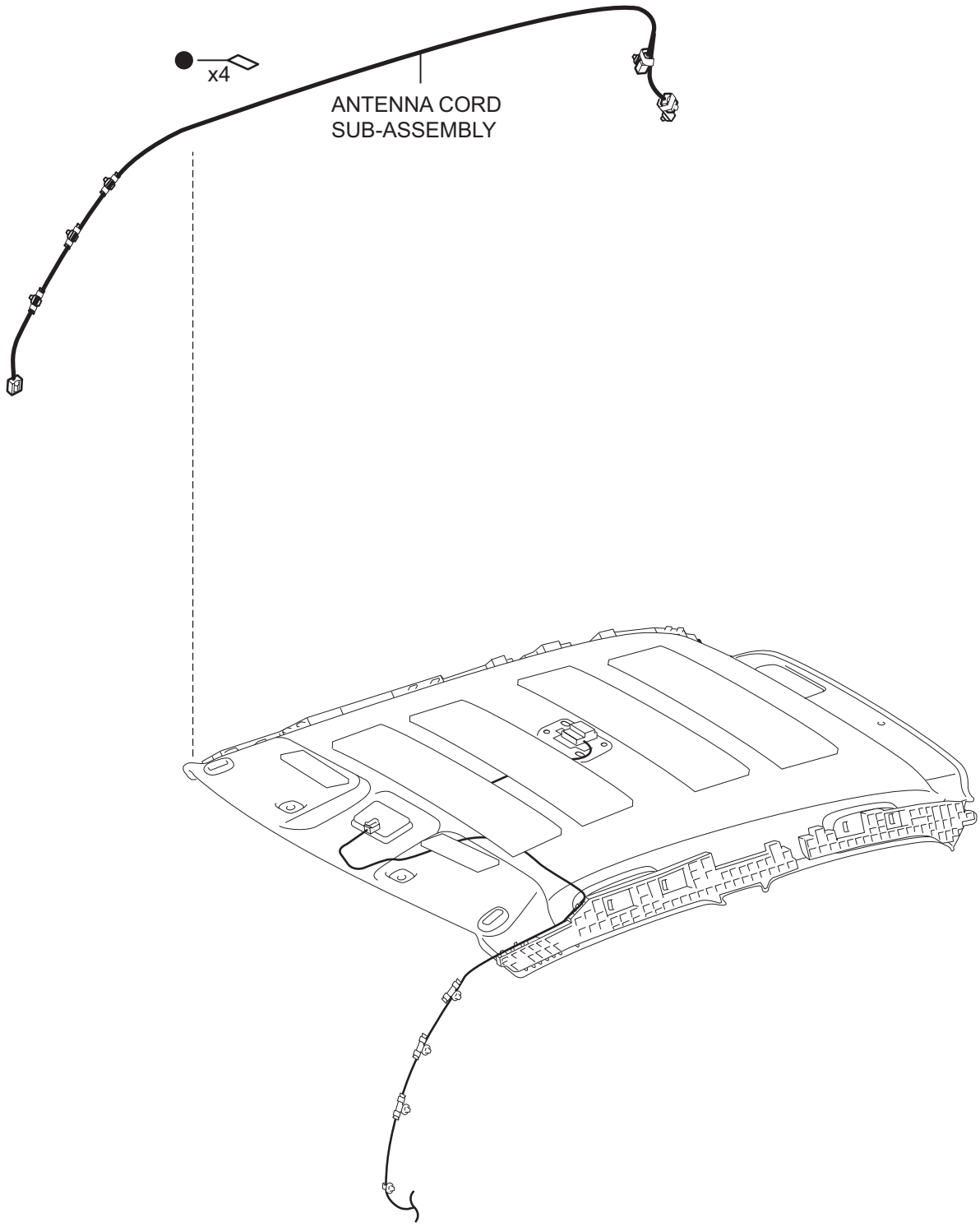

● Non-reusable part

T

B138689E01

REMOVAL

CAUTION:
Some of these service operations affect the SRS airbag system. Read the precautionary notices concerning the SRS airbag system before servicing (See page RS-1).
NOTICE:
Always use "Torx" socket wrench E10 when removing the rear seat.

1. **DISCONNECT CABLE FROM NEGATIVE BATTERY TERMINAL**
   CAUTION:
   Wait for at least 90 seconds after disconnecting the cable to prevent the airbag from working
2. **REMOVE DECK BOARD SUB-ASSEMBLY (See page IR-48)**
3. **REMOVE DECK FLOOR BOX RH (See page IR-48)**
4. **REMOVE DECK FLOOR BOX LH (See page IR-48)**
5. **REMOVE NO. 1 REAR SEAT LEG COVER (for 60/40 Split Seat Type)**
   (a) for RH Side:
   (1) Remove the No. 1 rear seat leg cover (See page SE-89).
   (b) for LH Side:
   (1) Remove the No. 1 rear seat leg cover (See page SE-70).
6. **REMOVE NO. 2 REAR SEAT LEG COVER (for 60/40 Split Seat Type) (See page SE-70)**
7. **REMOVE REAR SEAT ASSEMBLY RH (for 60/40 Split Seat Type) (See page SE-89)**
8. **REMOVE REAR SEAT ASSEMBLY LH (for 60/40 Split Seat Type) (See page SE-71)**
9. **REMOVE REAR SEAT CUSHION COVER PAD SUB-ASSEMBLY (for Hold Down Seat Type) (See page SE-114)**
10. **REMOVE REAR SEATBACK ASSEMBLY (for Hold Down Seat Type) (See page SE-115)**
11. **REMOVE REAR DECK TRIM COVER (See page IR-49)**
12. **REMOVE FRONT DOOR SCUFF PLATE RH (See page IR-49)**
13. **REMOVE FRONT DOOR SCUFF PLATE LH (See page IR-49)**
14. **REMOVE INSTRUMENT PANEL UNDER COVER SUB-ASSEMBLY RH (See page IR-50)**
15. **REMOVE INSTRUMENT PANEL UNDER COVER SUB-ASSEMBLY LH (See page IR-50)**

16. **REMOVE COWL SIDE TRIM BOARD RH (See page IR-50)**
17. **REMOVE COWL SIDE TRIM BOARD LH (See page IR-50)**
18. **REMOVE FRONT DOOR OPENING TRIM WEATHERSTRIP RH (See page IR-50)**
19. **REMOVE FRONT DOOR OPENING TRIM WEATHERSTRIP LH (See page IR-50)**
20. **REMOVE REAR DOOR SCUFF PLATE RH (See page IR-51)**
21. **REMOVE REAR DOOR SCUFF PLATE LH (See page IR-51)**
22. **REMOVE REAR DOOR OPENING TRIM WEATHERSTRIP RH (See page IR-51)**
23. **REMOVE REAR DOOR OPENING TRIM WEATHERSTRIP LH (See page IR-51)**
24. **REMOVE REAR SEAT OUTER BELT ASSEMBLY RH (See page IR-51)**
25. **REMOVE REAR SEAT OUTER BELT ASSEMBLY LH (See page IR-51)**
26. **REMOVE DECK TRIM SIDE PANEL ASSEMBLY RH (See page IR-52)**
27. **REMOVE DECK TRIM SIDE PANEL ASSEMBLY LH (See page IR-52)**
28. **REMOVE REAR CENTER SEAT OUTER BELT ASSEMBLY (See page IR-52)**
29. **REMOVE ROOF SIDE INNER GARNISH RH (See page IR-53)**
30. **REMOVE ROOF SIDE INNER GARNISH LH (See page IR-54)**
31. **REMOVE SEAT BELT ANCHOR COVER CAP (See page IR-54)**
32. **REMOVE FRONT SEAT OUTER BELT ASSEMBLY RH (See page IR-55)**
33. **REMOVE FRONT SEAT OUTER BELT ASSEMBLY LH (See page IR-55)**
34. **REMOVE CENTER PILLAR LOWER GARNISH RH (See page IR-55)**
35. **REMOVE CENTER PILLAR LOWER GARNISH LH (See page IR-55)**
36. **REMOVE CENTER PILLAR UPPER GARNISH RH (See page IR-55)**
37. **REMOVE CENTER PILLAR UPPER GARNISH LH (See page IR-55)**

38. **REMOVE SEAT BELT ANCHOR COVER (See page SB-159)**
39. **REMOVE ROOF HEADLINING SERVICE HOLE COVER (w/o Curtain Shield Airbag) (See page IR-55)**
40. **REMOVE ASSIST GRIP COVER (See page IR-55)**
41. **REMOVE ASSIST GRIP SUB-ASSEMBLY (See page IR-56)**
42. **REMOVE VISOR ASSEMBLY RH (See page IR-56)**
43. **REMOVE VISOR ASSEMBLY LH (See page IR-56)**
44. **REMOVE VISOR HOLDER RH (See page IR-56)**
45. **REMOVE VISOR HOLDER LH (See page IR-56)**
46. **REMOVE ROOM LIGHT ASSEMBLY (See page IR-57)**
47. **REMOVE MAP LIGHT ASSEMBLY (See page IR-58)**
48. **REMOVE FRONT PILLAR GARNISH RH (See page IR-58)**
49. **REMOVE FRONT PILLAR GARNISH LH (See page IR-59)**
50. **REMOVE INSTRUMENT PANEL FINISH PANEL END RH (See page ME-145)**
51. **REMOVE INSTRUMENT PANEL FINISH PANEL END LH (See page ME-145)**
52. **REMOVE INSTRUMENT CLUSTER FINISH PANEL (See page ME-145)**
53. **REMOVE COMBINATION METER ASSEMBLY (See page ME-146)**
54. **REMOVE GLOVE COMPARTMENT DOOR ASSEMBLY (See page IP-20)**
55. **REMOVE NO. 1 SWITCH HOLE BASE (See page IP-20)**
56. **REMOVE UPPER INSTRUMENT PANEL SUB-ASSEMBLY (See page IP-21)**
57. **REMOVE NO. 2 ANTENNA CORD SUB-ASSEMBLY**
    (a) Remove the bolt and the bracket.
    (b) Disconnect the connector.
    (c) Disconnect the plug.
    (d) Using a clip remover, remove the clamp.

(e) Remove the 3 clamps and the No. 2 antenna cord.

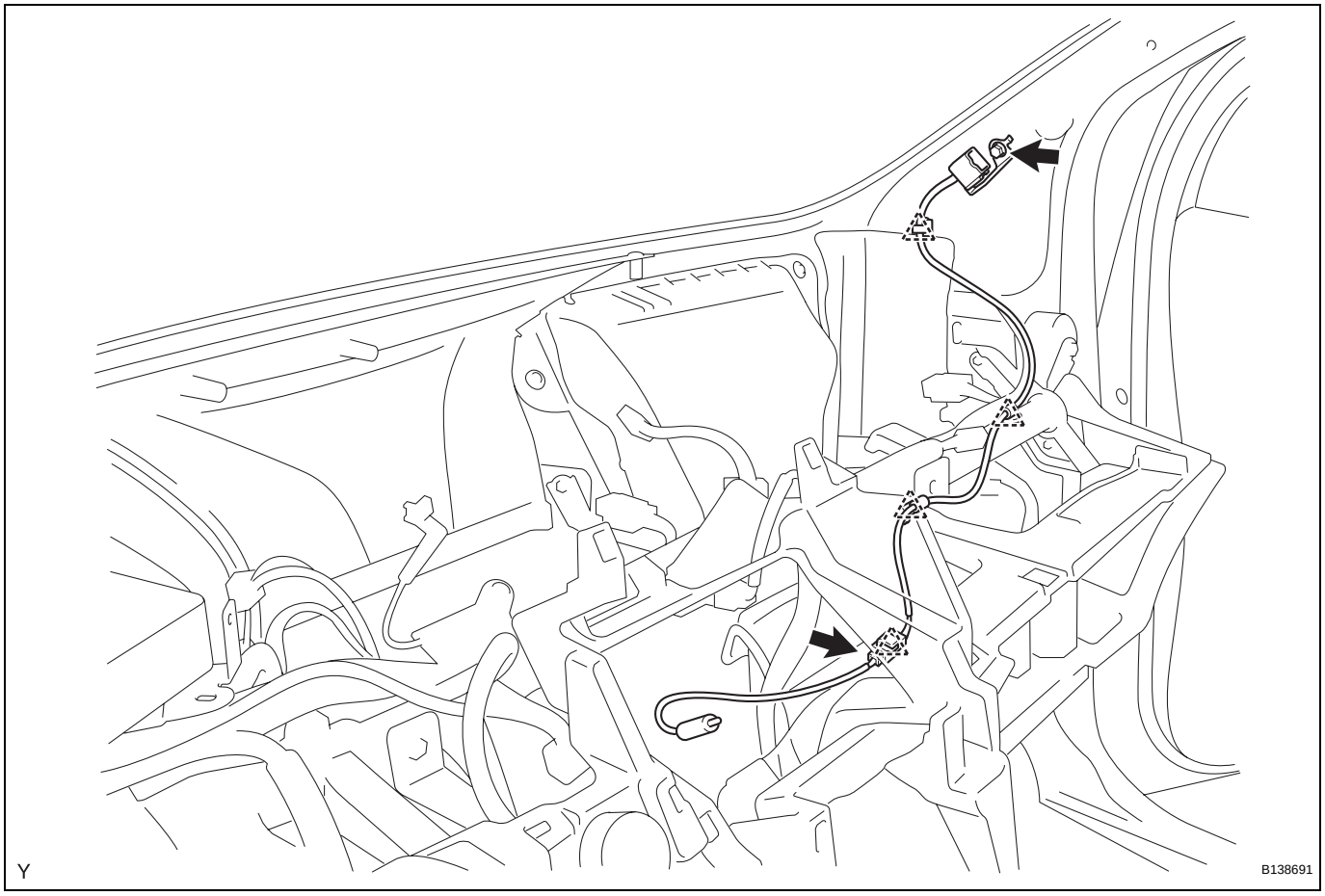

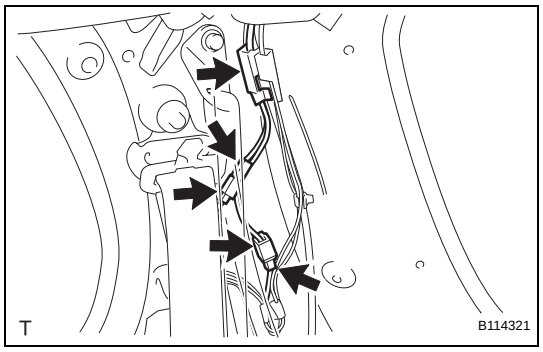

58. REMOVE ROOF HEADLINING ASSEMBLY

(a) Remove the antenna cord from the antenna cord clamp.

(b) Disconnect the 2 connectors.

(c) Using a clip remover, remove the 2 connectors.

(d) w/ Curtain Shield Airbag:

(1) Using a clip remover, remove the clip.

(2) Disengage the 4 hooks.

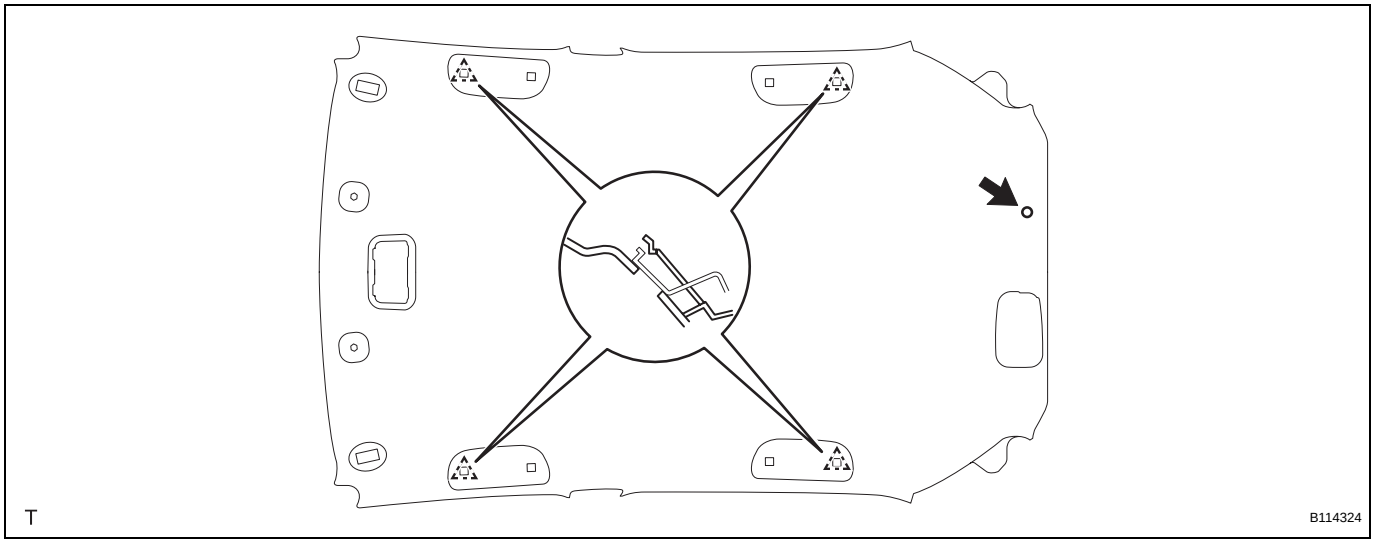

(e) w/o Curtain Shield Airbag:
(1) Using a clip remover, remove the clip.
(2) Disengage the 2 claws and 4 hooks.

AV

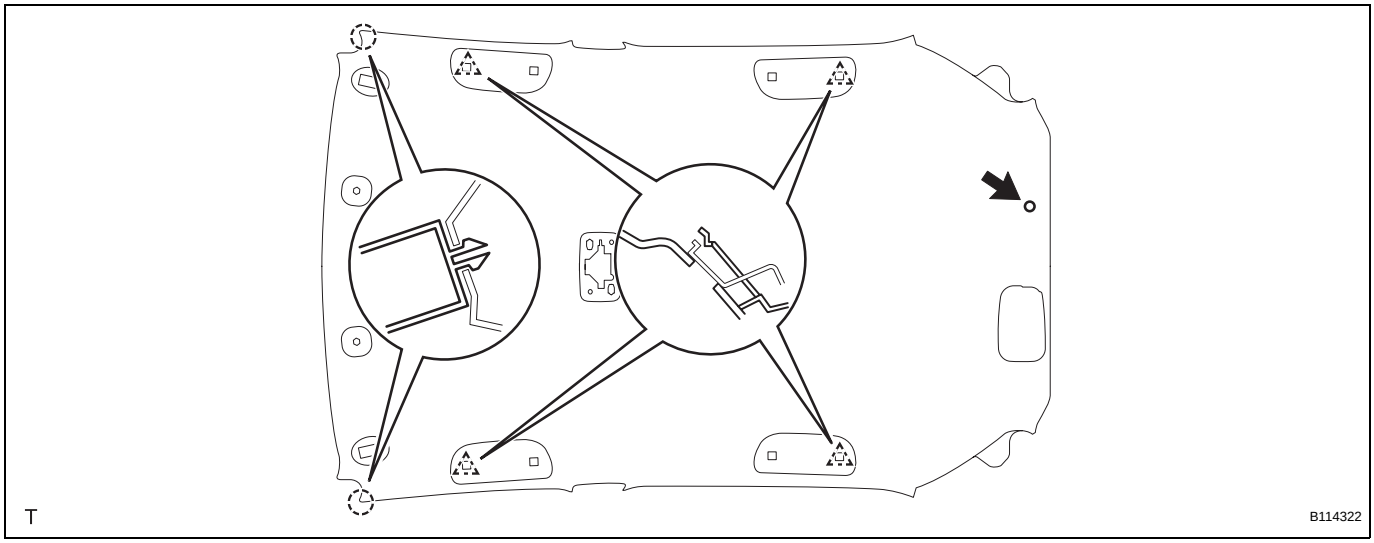

59. REMOVE ANTENNA CORD SUB-ASSEMBLY

(a) w/ Curtain Shield Airbag:
(1) Remove the 6 pieces of tape.
(2) Remove the antenna cord from the cutout of the roof headlining.

(3) Remove the antenna cord from the 3 claws of the front and rear side rail spacers.

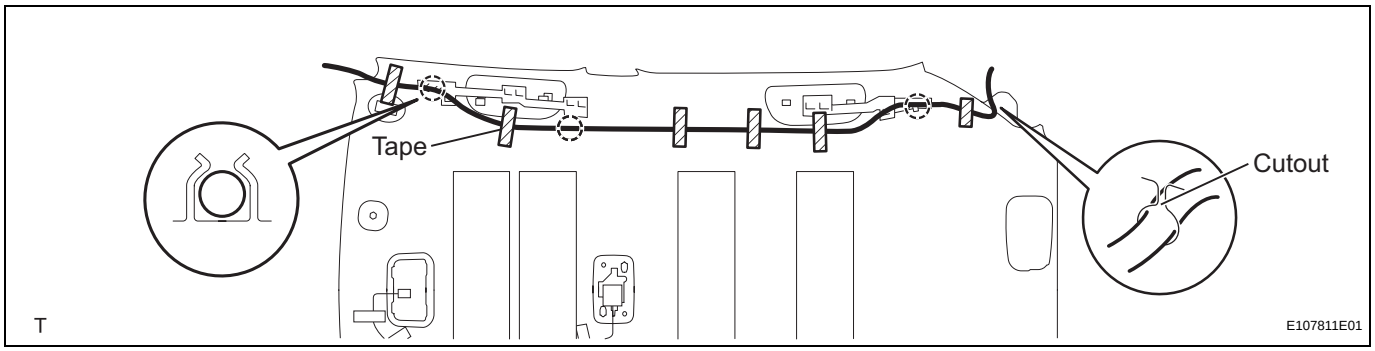

(b) w/o Curtain Shield Airbag:
(1) Remove the 4 pieces of tape.
(2) Remove the antenna cord from the cutout of the roof headlining.
(3) Remove the antenna cord from the 5 claws of the front and rear side rail spacers.

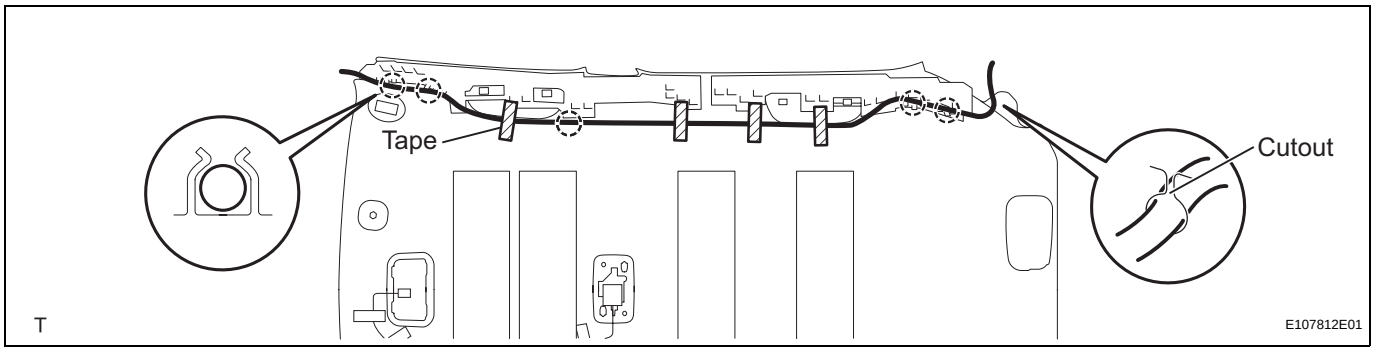

INSTALLATION

CAUTION:
Some of these service operations affect the SRS airbag system. Read the precautionary notices concerning the SRS airbag system before servicing (See page RS-1).
NOTICE:
Always use "Torx" socket wrench E10 when installing the rear seat.

1. INSTALL ANTENNA CORD SUB-ASSEMBLY

(a) w/ Curtain Shield Airbag:

(1) Install the part of the antenna cord marked with red positioning tape into claw A of the front side rail spacer.

(2) Install the antenna cord positioning tapes into the 2 claws of the front and rear side rail spacers.

(3) Insert the antenna cord positioning tape into the cutout of the roof headlining.

(4) Align the antenna cord positioning tapes with the markings of the roof headlining.

(5) Install the antenna cord onto the roof headlining with 6 new pieces of tape.

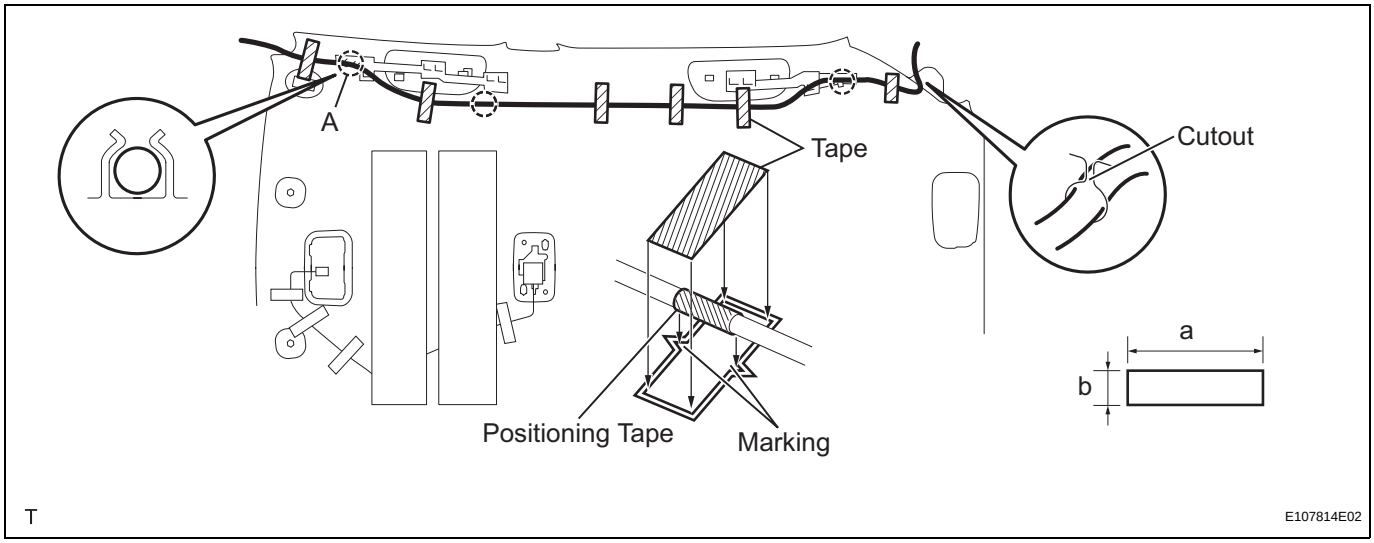

Tape size:

Mark	Measurement
a	80 mm (3.15 in.)
b	20 mm (0.787 in.)

NOTICE:
- **Apply the tape securely in place.**
- **Do not touch the adhesive surface when applying the tape to prevent adhesion failure.**

(b) w/o Curtain Shield Airbag:

(1) Install the part of the antenna cord marked with red positioning tape into claw A of the front side rail spacer.

(2) Install the antenna cord positioning tapes into the 4 claws of the front and rear side rail spacers.
(3) Insert the antenna cord positioning tape into the cutout of the roof headlining.
(4) Align the antenna cord positioning tapes with the markings of the roof headlining.
(5) Install the antenna cord onto the roof headlining with 4 new pieces of tape.

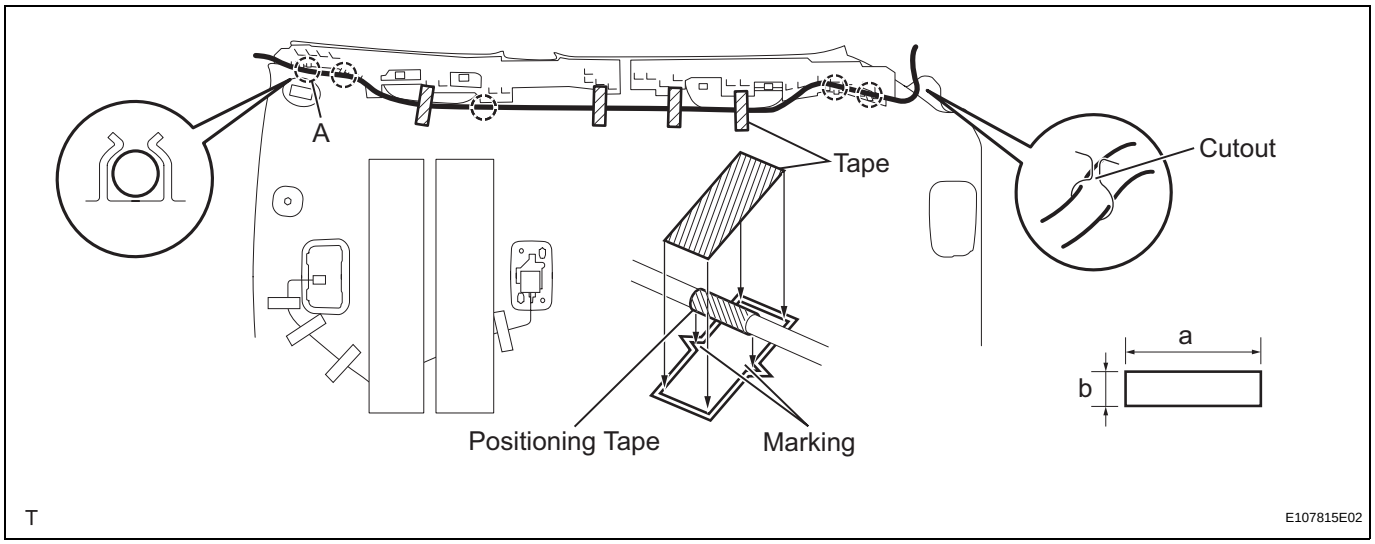

Tape size:

Mark	Measurement
a	80 mm (3.15 in.)
b	20 mm (0.787 in.)

NOTICE:
- **Apply the tape securely in place.**
- **Do not touch the adhesive surface when applying the tape to prevent adhesion failure.**

2. INSTALL ROOF HEADLINING ASSEMBLY
(a) w/ Curtain Shield Airbag:
(1) Engage the 4 hooks and install the roof headlining.

AV

(2) Install the clip.

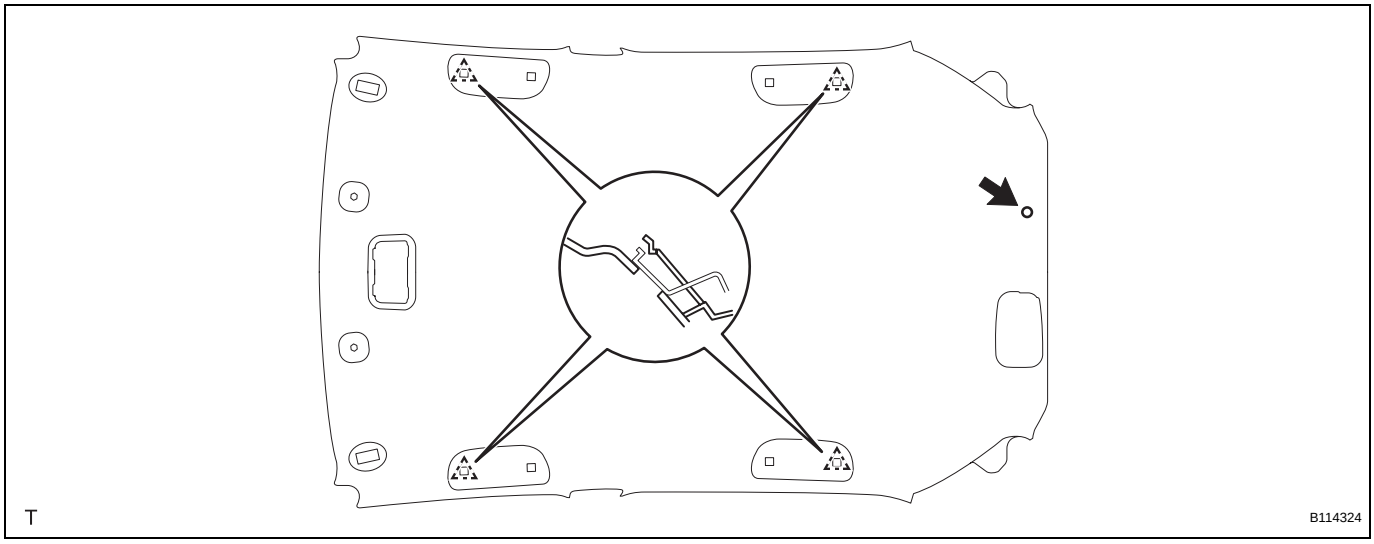

(b) w/o Curtain Shield Airbag:
(1) Engage the 2 claws and the 4 hooks and install the roof headlining.
(2) Install the clip.

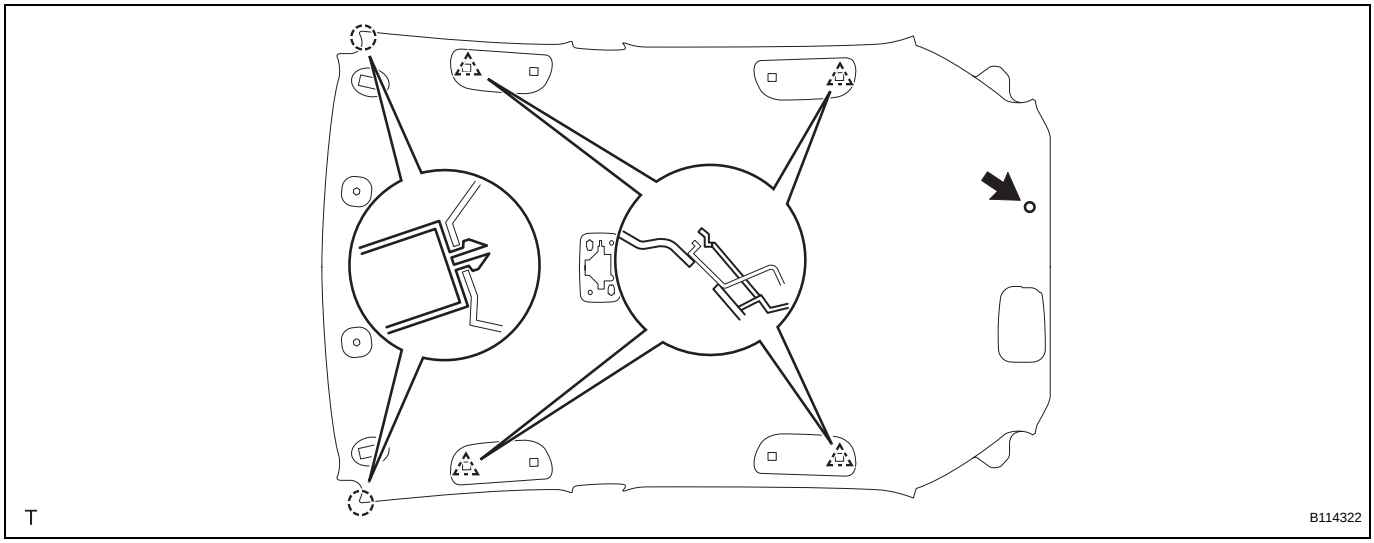

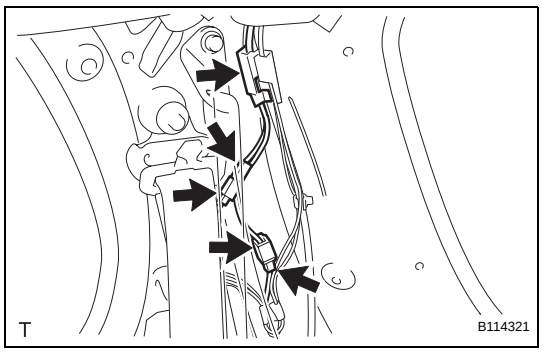

(c) Install the 2 connectors.
(d) Connect the 2 connectors.
(e) Install the antenna cord onto the antenna cord clamp.

3. INSTALL NO. 2 ANTENNA CORD SUB-ASSEMBLY
(a) Install the No. 2 antenna cord with the 4 clamps.
(b) Connect the plug.
(c) Connect the connector.

(d) Install the bracket with the bolt.

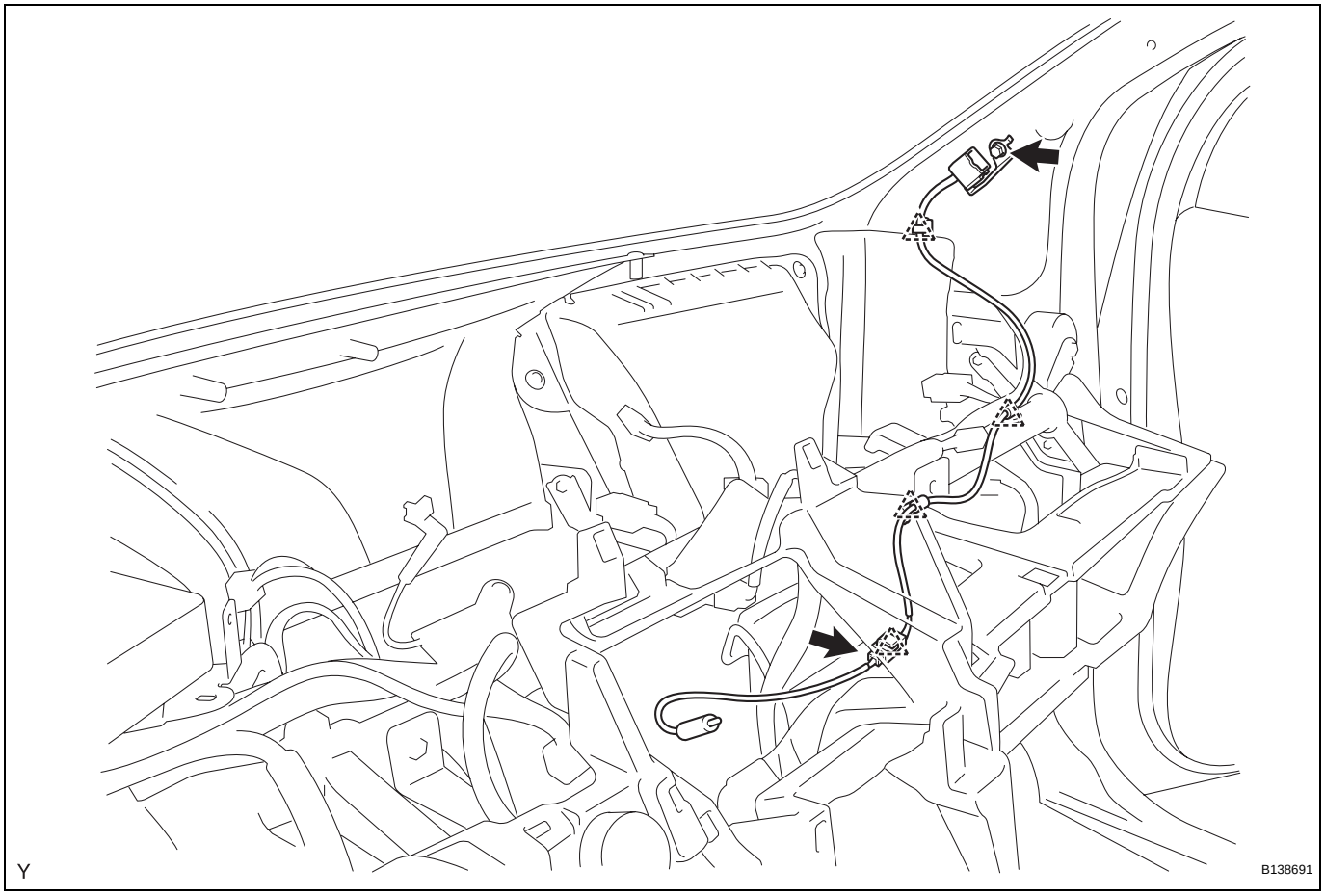

4. **INSTALL UPPER INSTRUMENT PANEL SUB-ASSEMBLY (See page IP-29)**
5. **INSTALL NO. 1 SWITCH HOLE BASE (See page IP-32)**
6. **INSTALL GLOVE COMPARTMENT DOOR ASSEMBLY (See page IP-32)**
7. **INSTALL COMBINATION METER ASSEMBLY (See page ME-148)**
8. **INSTALL INSTRUMENT CLUSTER FINISH PANEL (See page ME-148)**
9. **INSTALL INSTRUMENT PANEL FINISH PANEL END RH (See page ME-149)**
10. **INSTALL INSTRUMENT PANEL FINISH PANEL END LH (See page ME-149)**
11. **INSTALL FRONT PILLAR GARNISH RH (See page IR-71)**
12. **INSTALL FRONT PILLAR GARNISH LH (See page IR-72)**
13. **INSTALL MAP LIGHT ASSEMBLY (See page IR-73)**
14. **INSTALL ROOM LIGHT ASSEMBLY (See page IR-74)**

15. **INSTALL VISOR HOLDER RH (See page IR-75)**
16. **INSTALL VISOR HOLDER LH (See page IR-75)**
17. **INSTALL VISOR ASSEMBLY RH (See page IR-75)**
18. **INSTALL VISOR ASSEMBLY LH (See page IR-75)**
19. **INSTALL ROOF HEADLINING SERVICE HOLE COVER (w/o Curtain Shield Airbag) (See page IR-76)**
20. **INSTALL ASSIST GRIP SUB-ASSEMBLY (See page IR-75)**
21. **INSTALL ASSIST GRIP COVER (See page IR-75)**
22. **INSTALL SEAT BELT ANCHOR COVER (See page SB-160)**
23. **INSTALL CENTER PILLAR UPPER GARNISH RH (See page IR-76)**
24. **INSTALL CENTER PILLAR UPPER GARNISH LH (See page IR-76)**
25. **INSTALL CENTER PILLAR LOWER GARNISH RH (See page IR-76)**
26. **INSTALL CENTER PILLAR LOWER GARNISH LH (See page IR-76)**
27. **INSTALL FRONT SEAT OUTER BELT ASSEMBLY RH (See page IR-76)**
28. **INSTALL FRONT SEAT OUTER BELT ASSEMBLY LH (See page IR-76)**
29. **INSTALL SEAT BELT ANCHOR COVER CAP (See page IR-76)**
30. **INSTALL ROOF SIDE INNER GARNISH RH (See page IR-77)**
31. **INSTALL ROOF SIDE INNER GARNISH LH (See page IR-77)**
32. **INSTALL REAR CENTER SEAT OUTER BELT ASSEMBLY (See page IR-78)**
33. **INSTALL DECK TRIM SIDE PANEL ASSEMBLY RH (See page IR-79)**
34. **INSTALL DECK TRIM SIDE PANEL ASSEMBLY LH (See page IR-79)**
35. **INSTALL REAR SEAT OUTER BELT ASSEMBLY RH (See page IR-79)**
36. **INSTALL REAR SEAT OUTER BELT ASSEMBLY LH (See page IR-80)**
37. **INSTALL REAR DOOR OPENING TRIM WEATHERSTRIP RH (See page IR-80)**
38. **INSTALL REAR DOOR OPENING TRIM WEATHERSTRIP LH (See page IR-80)**

39. **INSTALL REAR DOOR SCUFF PLATE RH (See page IR-80)**
40. **INSTALL REAR DOOR SCUFF PLATE LH (See page IR-80)**
41. **INSTALL FRONT DOOR OPENING TRIM WEATHERSTRIP RH (See page IR-81)**
42. **INSTALL FRONT DOOR OPENING TRIM WEATHERSTRIP LH (See page IR-81)**
43. **INSTALL COWL SIDE TRIM BOARD RH (See page IR-81)**
44. **INSTALL COWL SIDE TRIM BOARD LH (See page IR-81)**
45. **INSTALL INSTRUMENT PANEL UNDER COVER SUB-ASSEMBLY RH (See page IR-81)**
46. **INSTALL INSTRUMENT PANEL UNDER COVER SUB-ASSEMBLY LH (See page IR-82)**
47. **INSTALL FRONT DOOR SCUFF PLATE RH (See page IR-82)**
48. **INSTALL FRONT DOOR SCUFF PLATE LH (See page IR-82)**
49. **INSTALL REAR DECK TRIM COVER (See page IR-82)**
50. **INSTALL REAR SEAT ASSEMBLY RH (for 60/40 Split Seat Type) (See page SE-102)**
51. **INSTALL REAR SEAT ASSEMBLY LH (for 60/40 Split Seat Type) (See page SE-84)**
52. **INSTALL NO. 1 REAR SEAT LEG COVER (for 60/40 Split Seat Type)**
    (a) for RH Side:
        (1) Remove the No. 1 rear seat leg cover (See page SE-103).
    (b) for LH Side:
        (1) Remove the No. 1 rear seat leg cover (See page SE-85).
53. **INSTALL NO. 2 REAR SEAT LEG COVER (for 60/40 Split Seat Type) (See page SE-85)**
54. **INSTALL REAR SEATBACK ASSEMBLY (for Hold Down Seat Type) (See page SE-122)**
55. **INSTALL REAR SEAT CUSHION COVER PAD SUB-ASSEMBLY (for Hold Down Seat Type) (See page SE-123)**
56. **INSTALL DECK FLOOR BOX RH (See page IR-83)**
57. **INSTALL DECK FLOOR BOX LH (See page IR-83)**
58. **INSTALL DECK BOARD SUB-ASSEMBLY (See page IR-83)**

59. INSTALL PACKAGE TRAY TRIM PANEL ASSEMBLY
(See page IR-83)

60. CONNECT CABLE TO NEGATIVE BATTERY TERMINAL
Torque: 5.4 N*m (55 kgf*cm, 48 in.*lbf)

61. CHECK SRS WARNING LIGHT
(See page RS-31)

RADIO ANTENNA CORD (for Hatchback 3 Door)

COMPONENTS

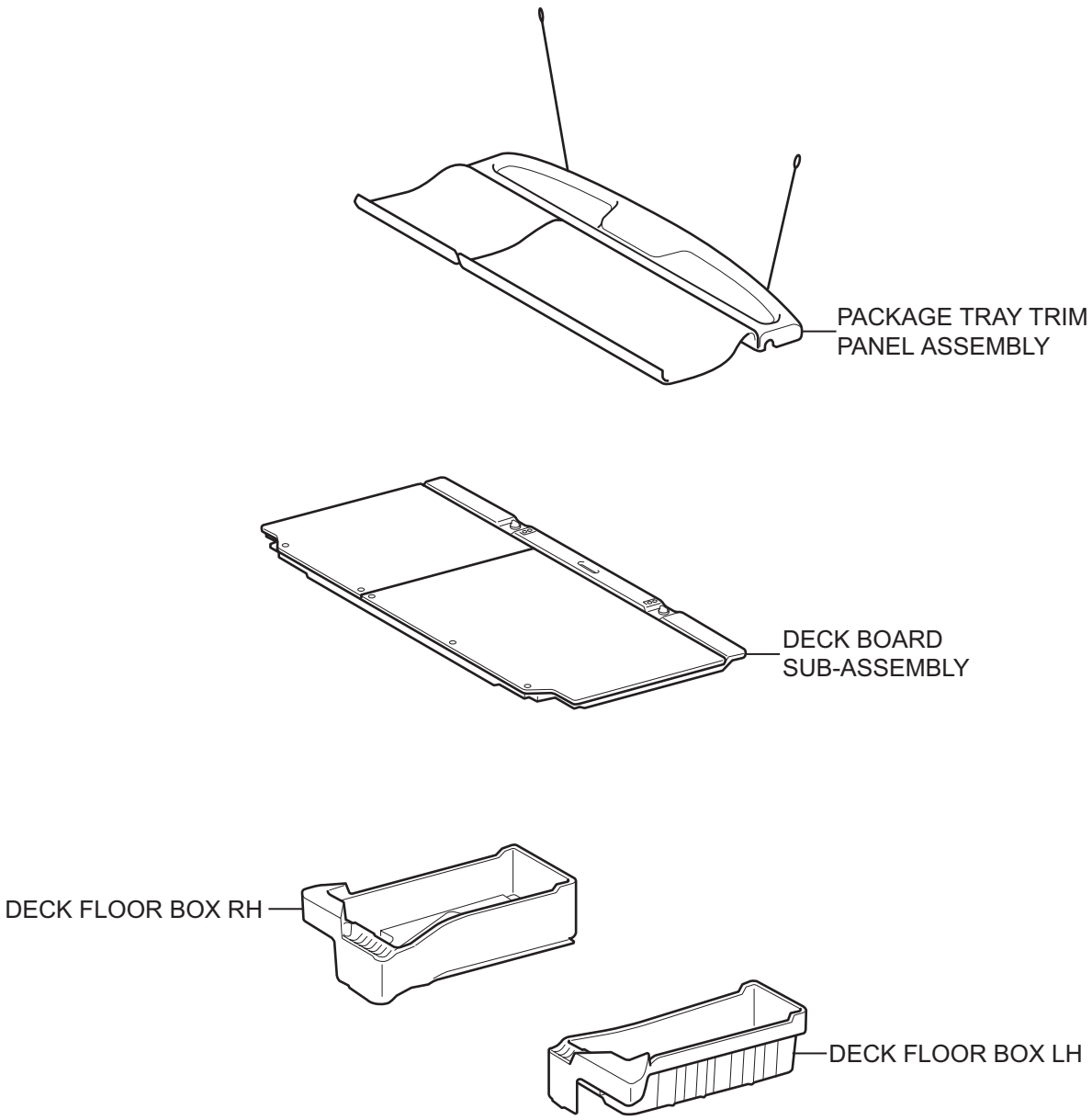

T

B114273E01

AV

for 60/40 Split Seat Type:

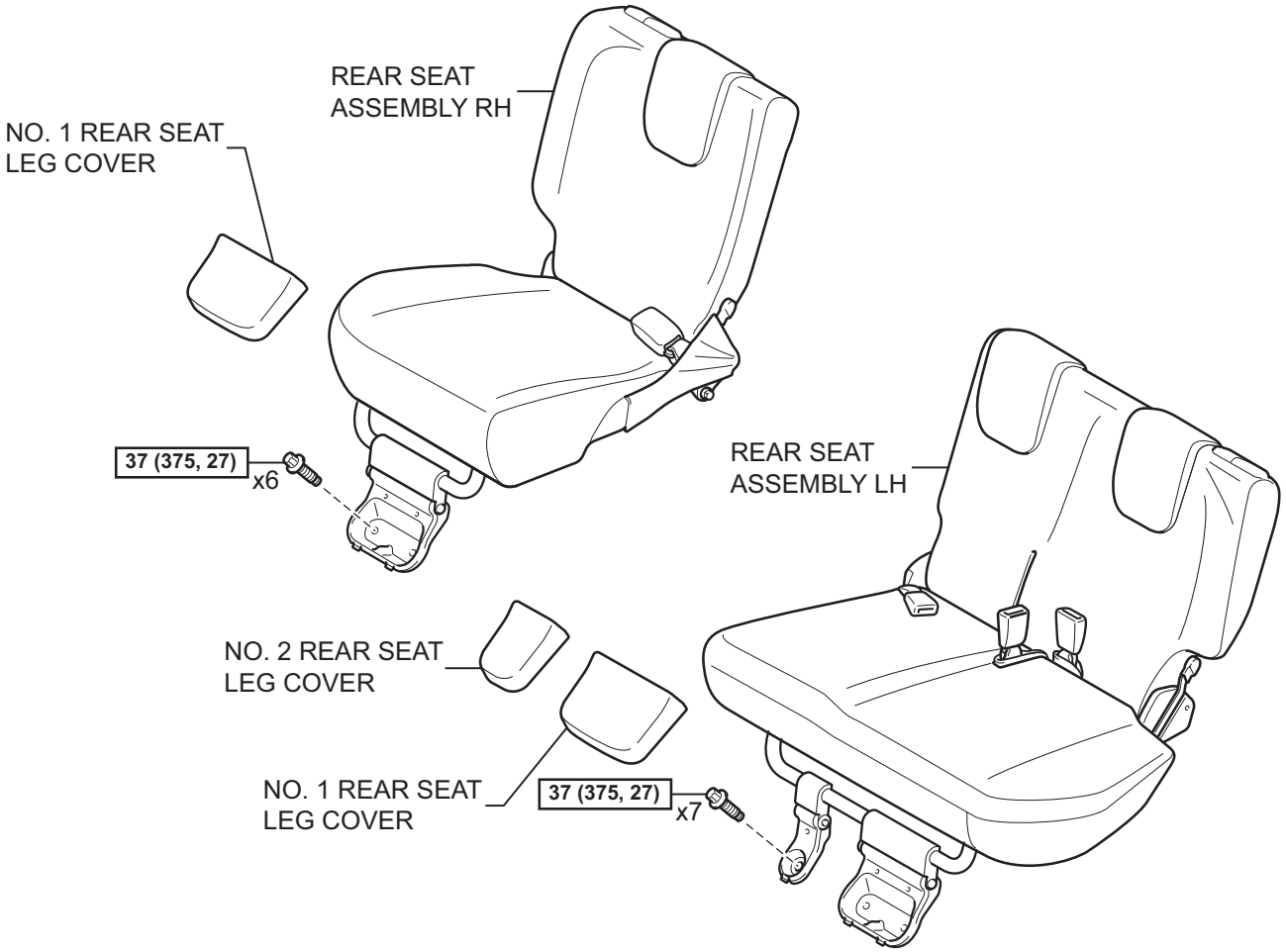

for Hold Down Seat Type:

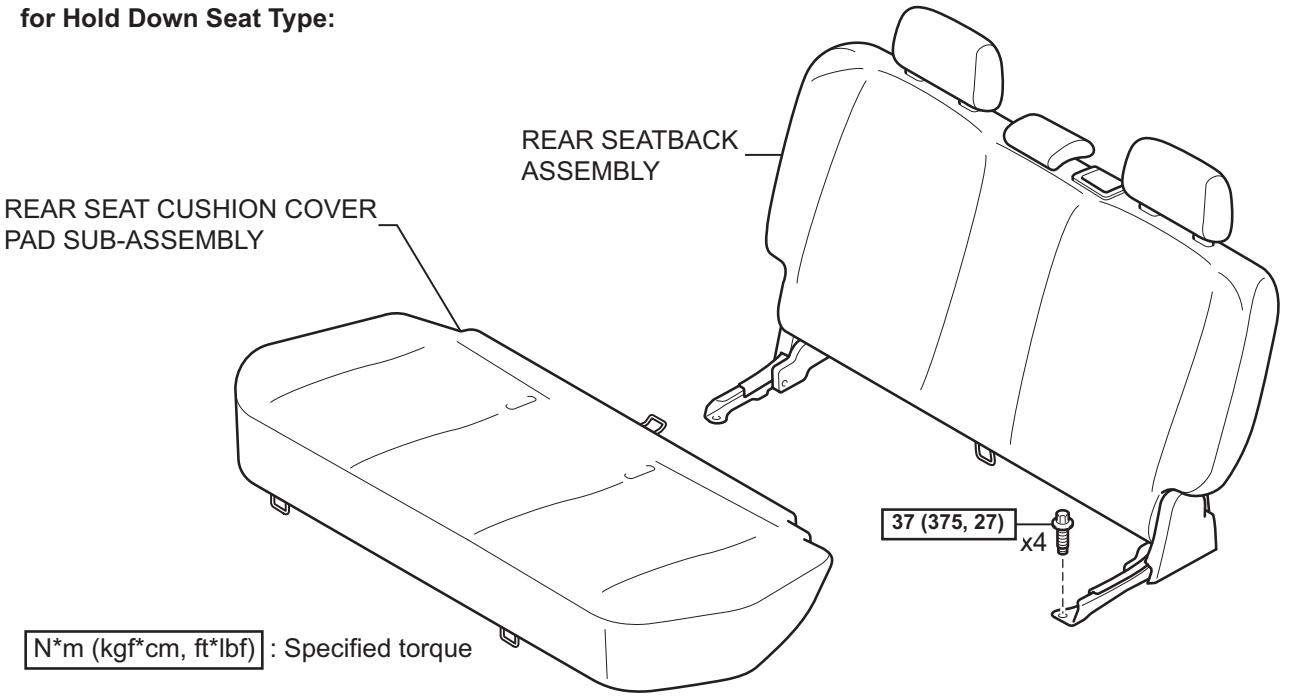

N*m (kgf*cm, ft*lbf) : Specified torque

T

B121713E03

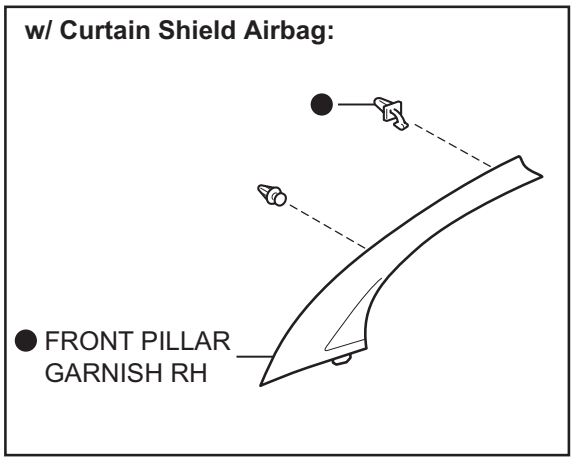

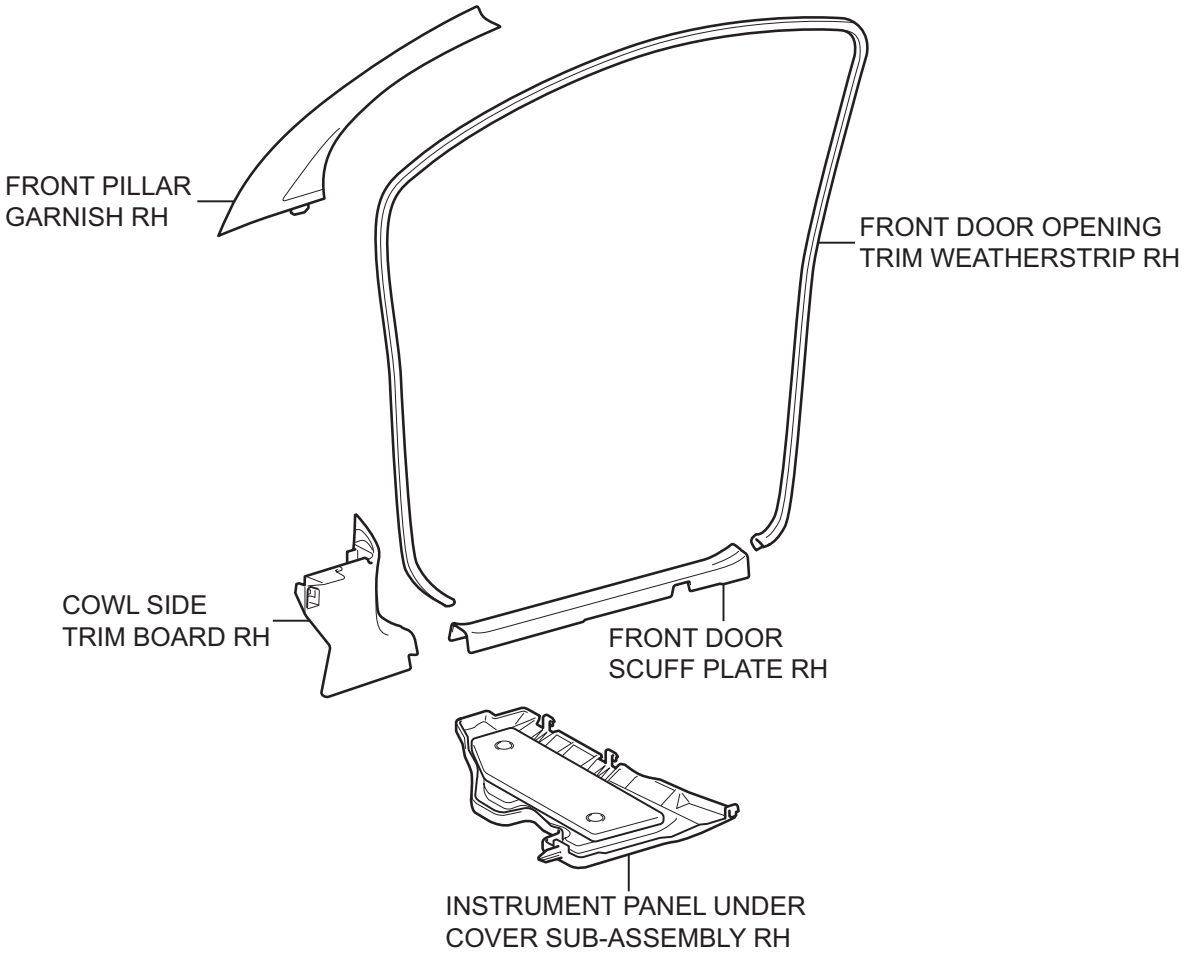

● Non-reusable part

T

B114488E02

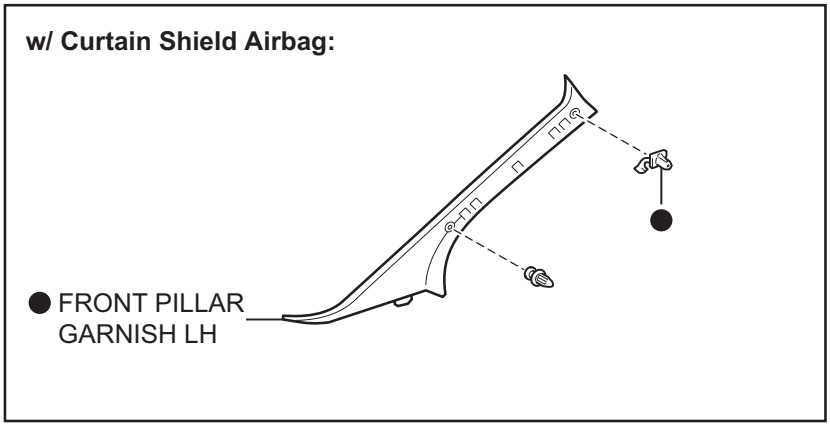

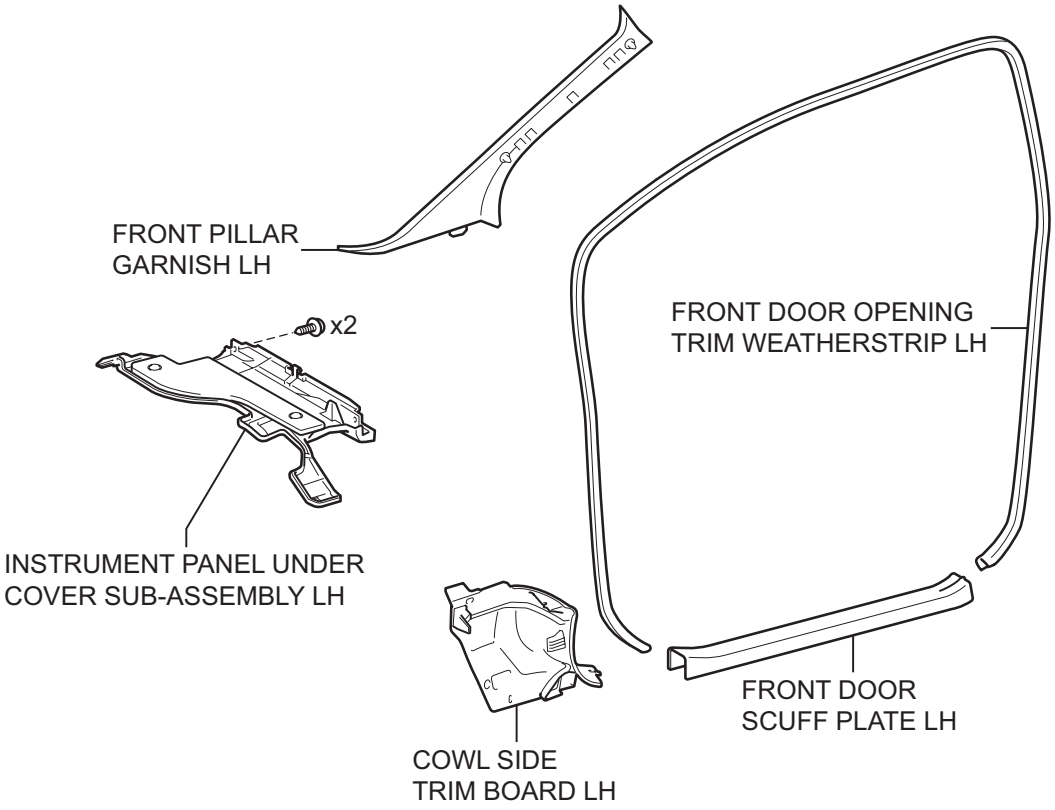

● Non-reusable part

T

B114489E02

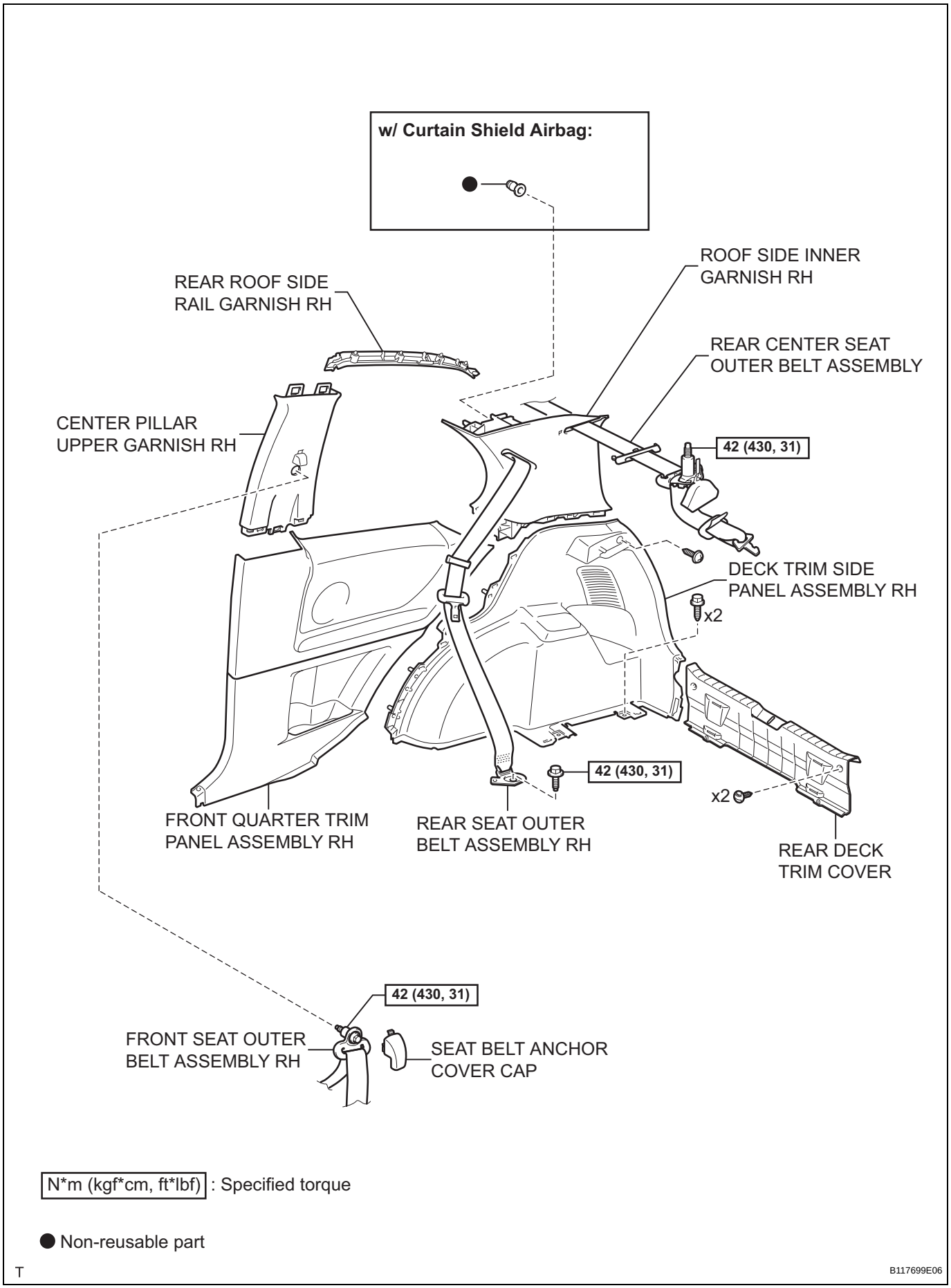

N*m (kgf*cm, ft*lbf) : Specified torque

● Non-reusable part

T

B117699E06

AV

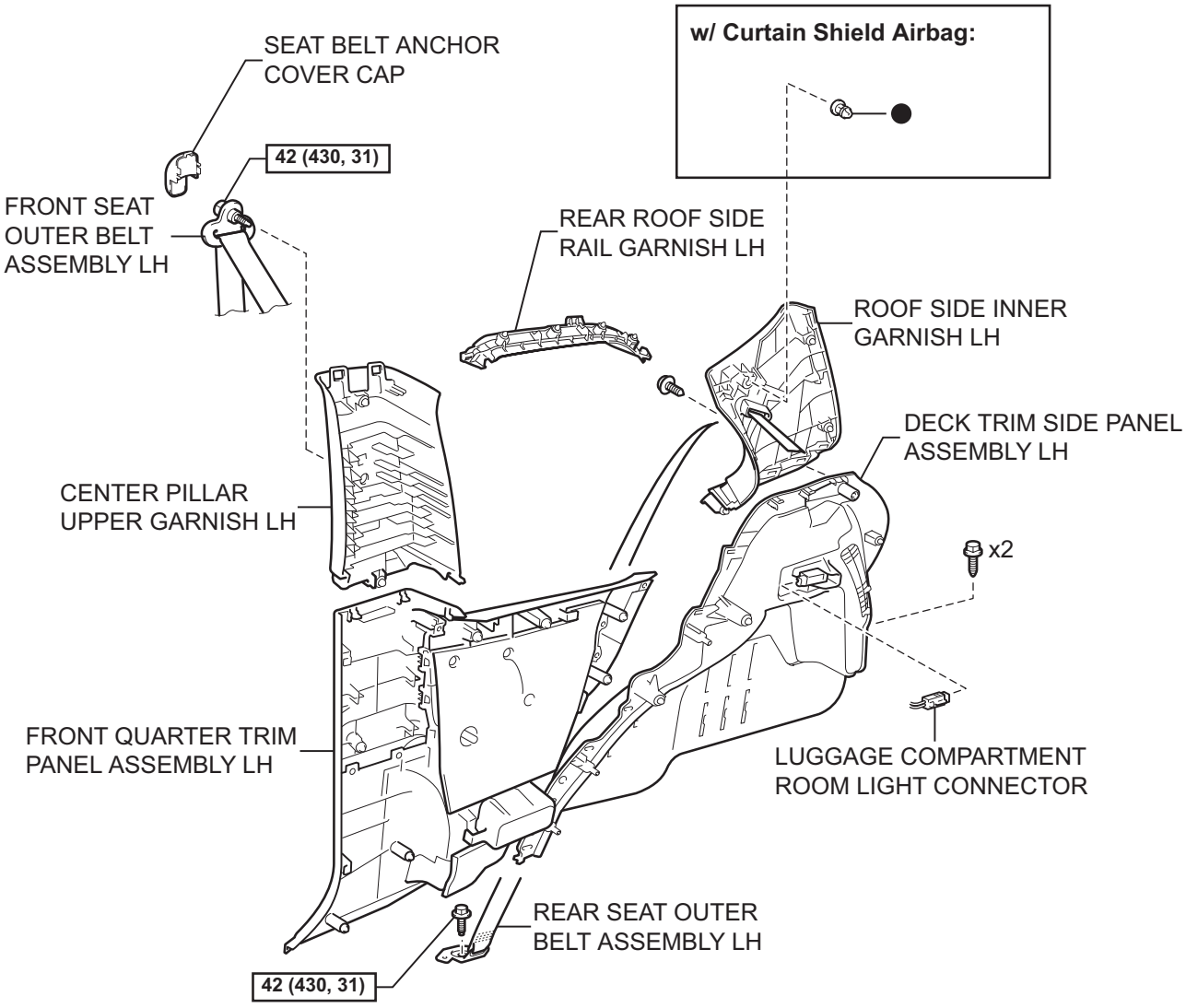

N*m (kgf*cm, ft*lbf) : Specified torque

● Non-reusable part

T

B117700E07

AV

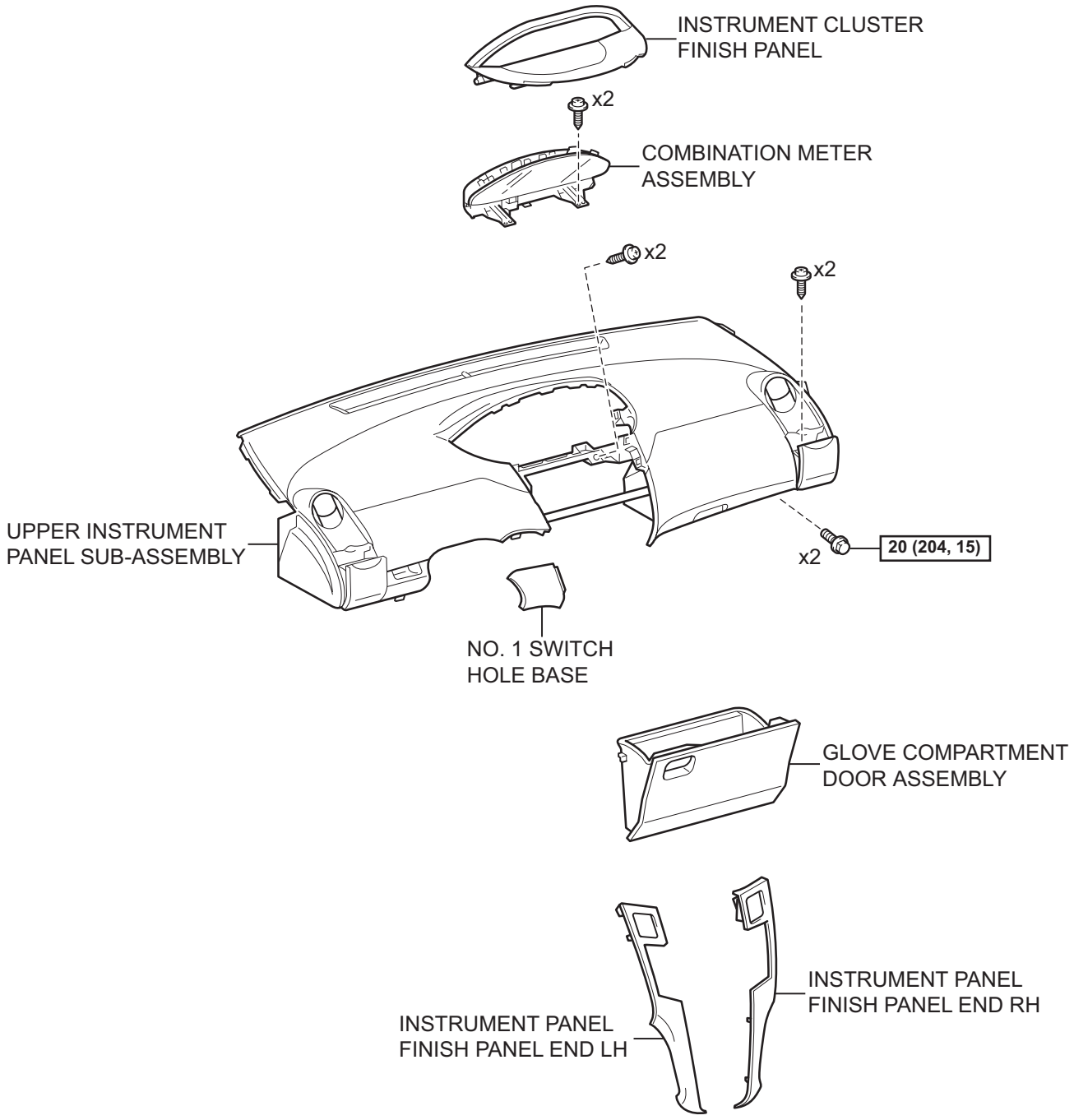

N*m (kgf*cm, ft*lbf) : Specified torque

T

B138684E01

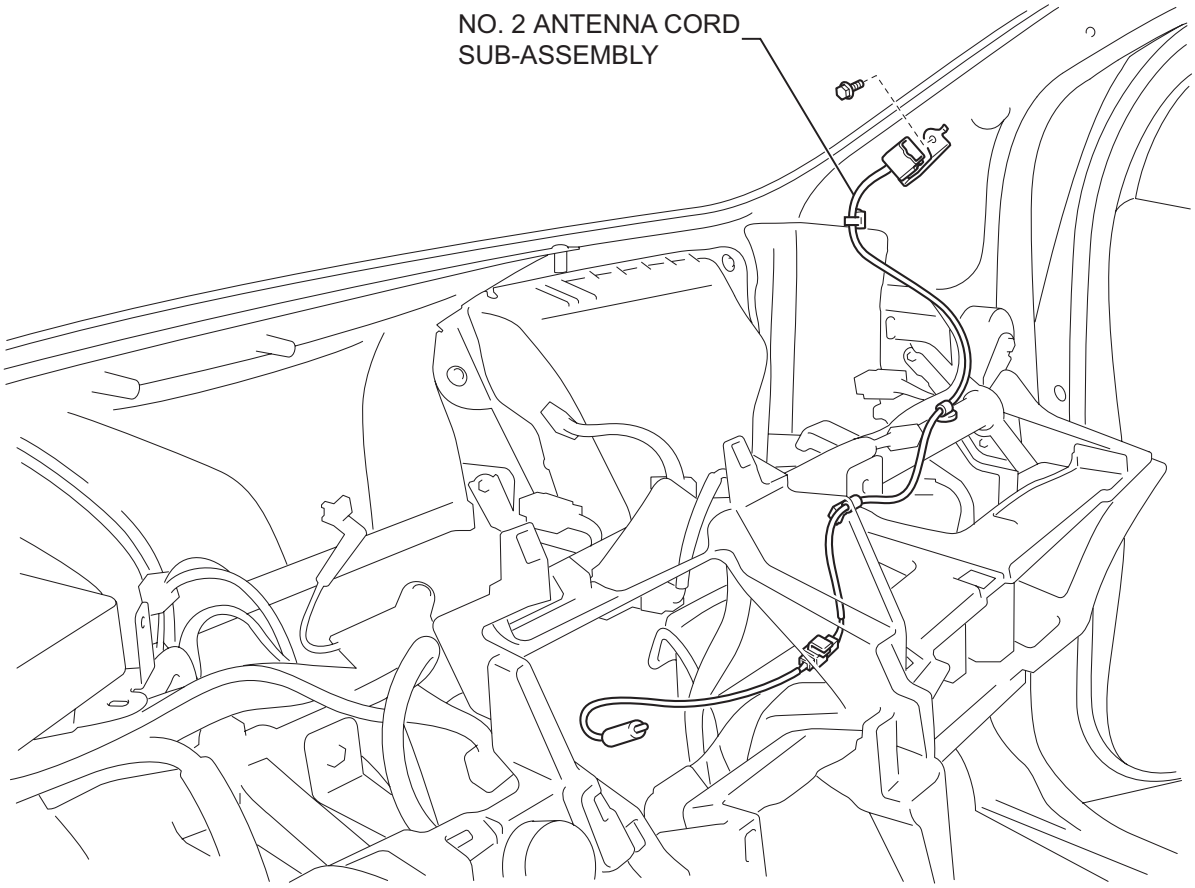

Y

B138685E01

w/ Curtain Shield Airbag:

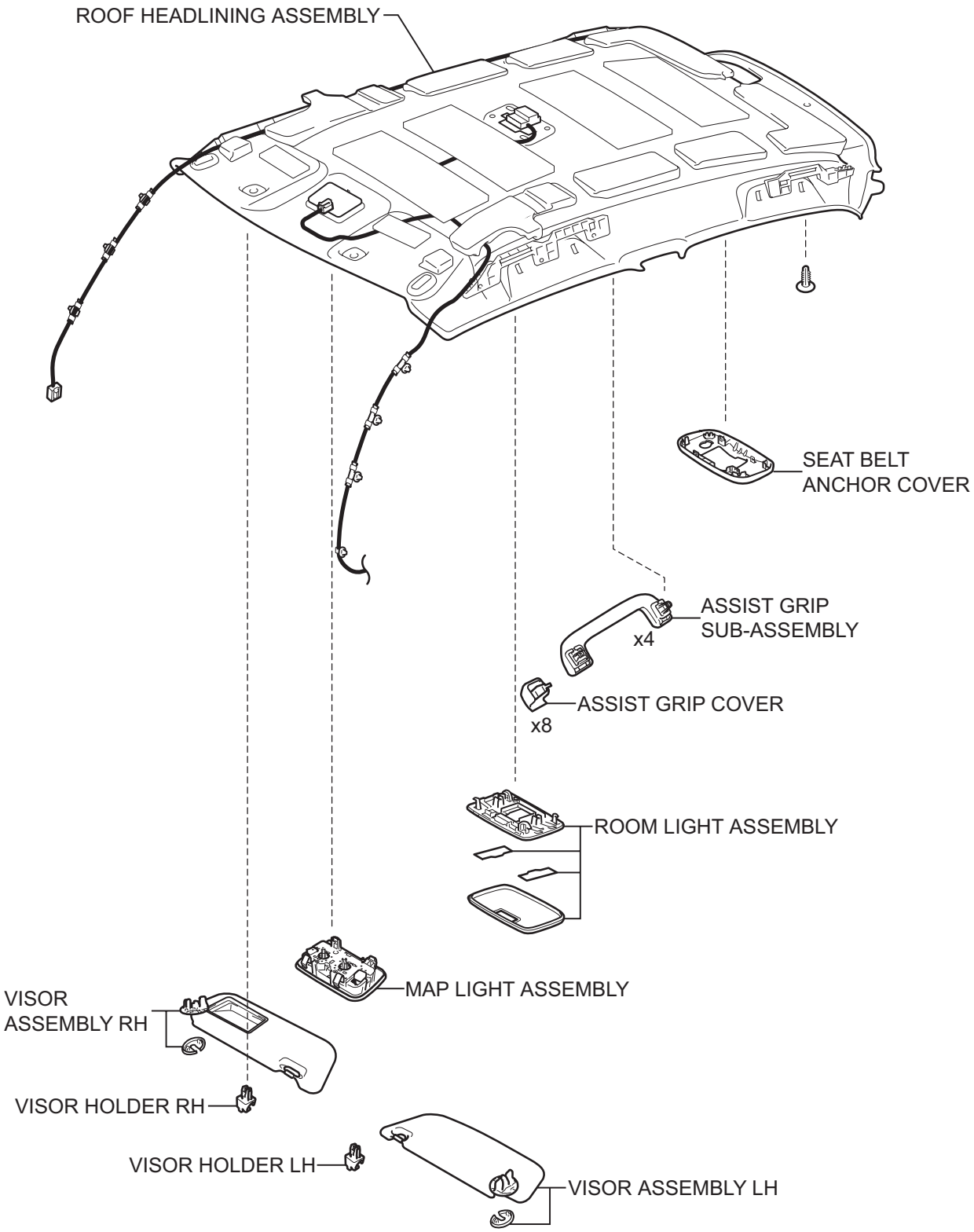

T

B138692E01

w/o Curtain Shield Airbag:

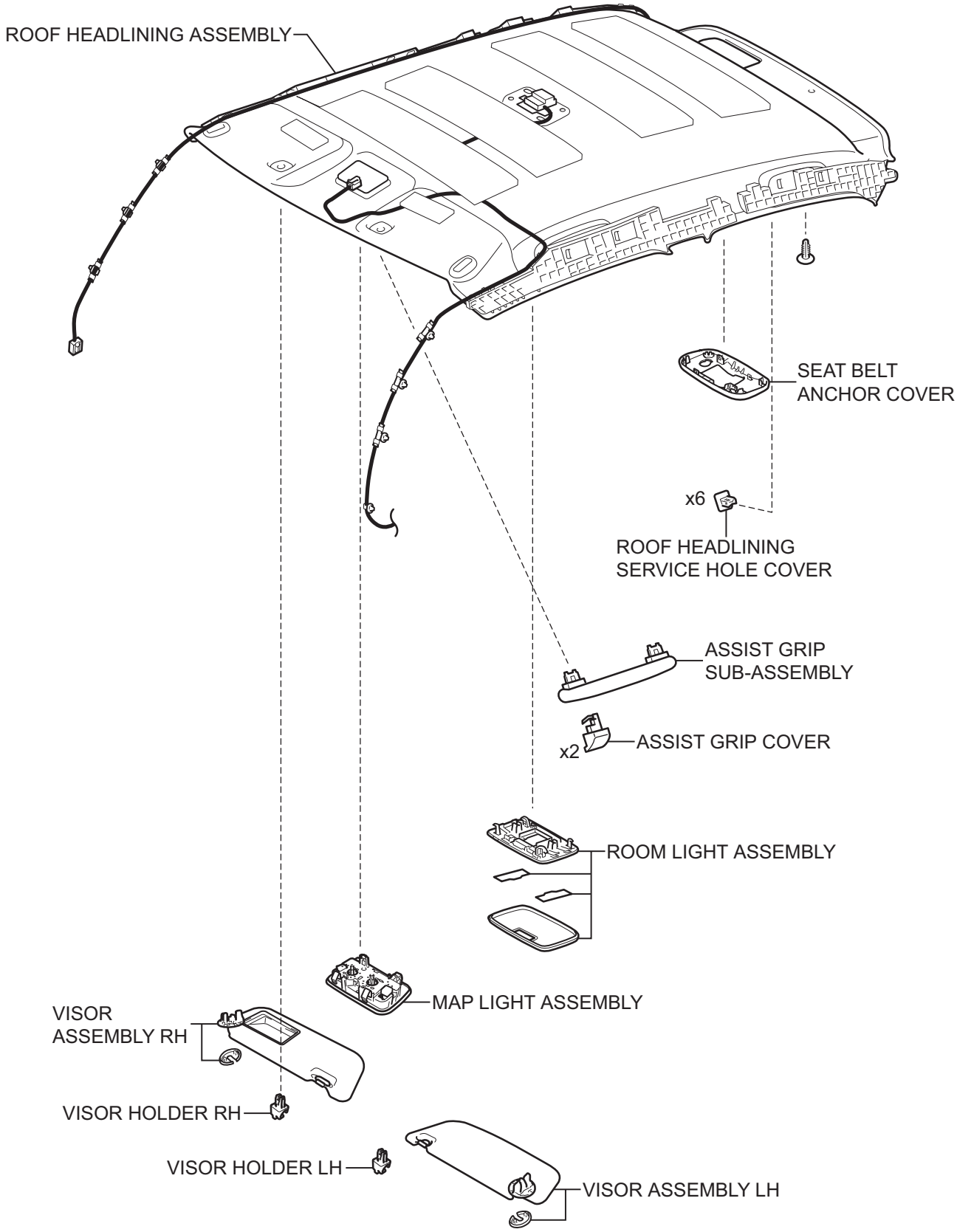

T

B138693E01

AV

w/ Curtain Shield Airbag:

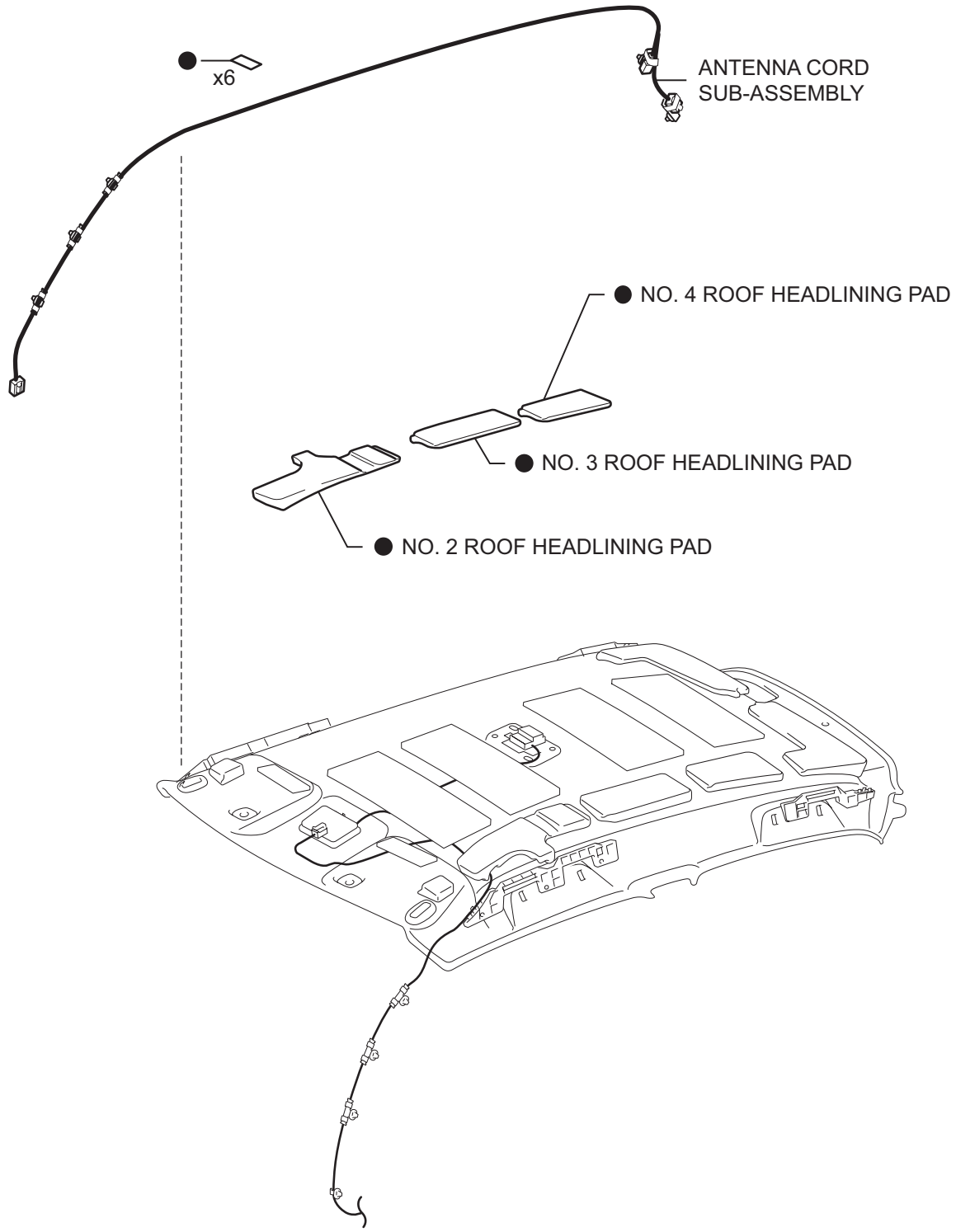

● Non-reusable part

T

B138694E01

w/o Curtain Shield Airbag:

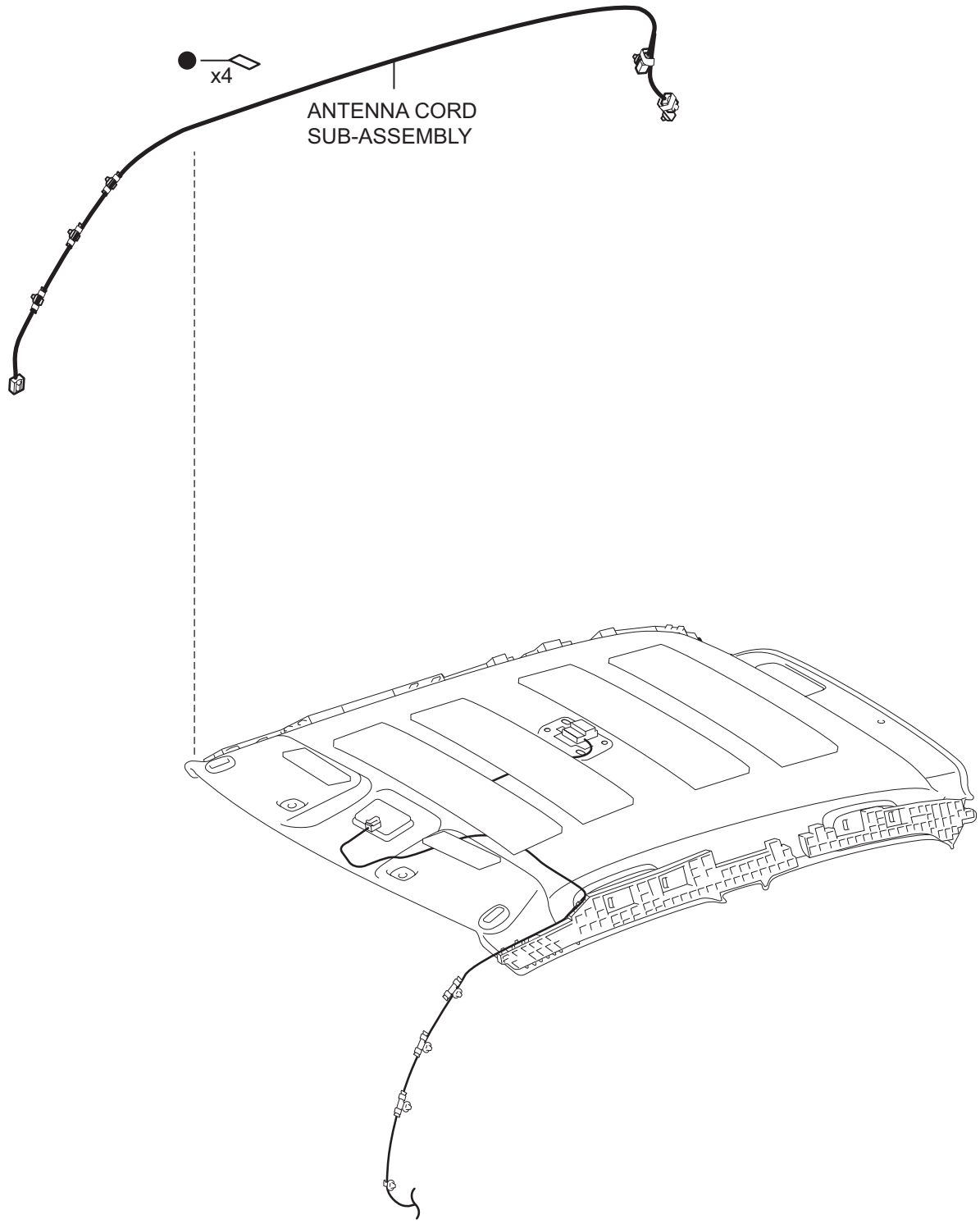

● Non-reusable part

T

B138695E01

REMOVAL

CAUTION:
Some of these service operations affect the SRS airbag system. Read the precautionary notices concerning the SRS airbag system before servicing (See page RS-1).
NOTICE:
Always use "Torx" socket wrench E10 when removing the rear seat.

1. **DISCONNECT CABLE FROM NEGATIVE BATTERY TERMINAL**
   CAUTION:
   Wait for at least 90 seconds after disconnecting the cable to prevent the airbag from working.
2. **REMOVE PACKAGE TRAY TRIM PANEL ASSEMBLY (See page IR-48)**
3. **REMOVE DECK BOARD SUB-ASSEMBLY (See page IR-48)**
4. **REMOVE DECK FLOOR BOX RH (See page IR-48)**
5. **REMOVE DECK FLOOR BOX LH (See page IR-48)**
6. **REMOVE NO. 1 REAR SEAT LEG COVER (for 60/40 Split Seat Type)**
   (a) for RH Side:
      (1) Remove the No. 1 rear seat leg cover (See page SE-89).
   (b) for LH Side:
      (1) Remove the No. 1 rear seat leg cover (See page SE-70).
7. **REMOVE NO. 2 REAR SEAT LEG COVER (for 60/40 Split Seat Type) (See page SE-70)**
8. **REMOVE REAR SEAT ASSEMBLY RH (for 60/40 Split Seat Type) (See page SE-89)**
9. **REMOVE REAR SEAT ASSEMBLY LH (for 60/40 Split Seat Type) (See page SE-71)**
10. **REMOVE REAR SEAT CUSHION COVER PAD SUB-ASSEMBLY (for Hold Down Seat Type) (See page SE-114)**
11. **REMOVE REAR SEATBACK ASSEMBLY (for Hold Down Seat Type) (See page SE-115)**
12. **REMOVE FRONT DOOR SCUFF PLATE RH (See page IR-97)**
13. **REMOVE FRONT DOOR SCUFF PLATE LH (See page IR-97)**
14. **REMOVE INSTRUMENT PANEL UNDER COVER SUB-ASSEMBLY RH (See page IR-50)**
15. **REMOVE INSTRUMENT PANEL UNDER COVER SUB-ASSEMBLY LH (See page IR-50)**

16. **REMOVE COWL SIDE TRIM BOARD RH (See page IR-50)**
17. **REMOVE COWL SIDE TRIM BOARD LH (See page IR-50)**
18. **REMOVE FRONT DOOR OPENING TRIM WEATHERSTRIP RH (See page IR-97)**
19. **REMOVE FRONT DOOR OPENING TRIM WEATHERSTRIP LH (See page IR-97)**
20. **REMOVE FRONT QUARTER TRIM PANEL ASSEMBLY RH (See page IR-97)**
21. **REMOVE FRONT QUARTER TRIM PANEL ASSEMBLY LH (See page IR-97)**
22. **REMOVE REAR DECK TRIM COVER (See page IR-49)**
23. **REMOVE REAR SEAT OUTER BELT ASSEMBLY RH (See page IR-98)**
24. **REMOVE REAR SEAT OUTER BELT ASSEMBLY LH (See page IR-98)**
25. **REMOVE DECK TRIM SIDE PANEL ASSEMBLY RH (See page IR-98)**
26. **REMOVE DECK TRIM SIDE PANEL ASSEMBLY LH (See page IR-98)**
27. **REMOVE SEAT BELT ANCHOR COVER CAP (See page IR-99)**
28. **REMOVE FRONT SEAT OUTER BELT ASSEMBLY RH (See page IR-99)**
29. **REMOVE FRONT SEAT OUTER BELT ASSEMBLY LH (See page IR-99)**
30. **REMOVE CENTER PILLAR UPPER GARNISH RH (See page IR-99)**
31. **REMOVE CENTER PILLAR UPPER GARNISH LH (See page IR-99)**
32. **REMOVE REAR CENTER SEAT OUTER BELT ASSEMBLY (See page IR-52)**
33. **REMOVE ROOF SIDE INNER GARNISH RH (See page IR-99)**
34. **REMOVE ROOF SIDE INNER GARNISH LH (See page IR-100)**
35. **REMOVE REAR ROOF SIDE RAIL GARNISH RH (See page IR-100)**
36. **REMOVE REAR ROOF SIDE RAIL GARNISH LH (See page IR-100)**
37. **REMOVE SEAT BELT ANCHOR COVER (See page SB-159)**

38. **REMOVE ROOF HEADLINING SERVICE HOLE COVER (w/o Curtain Shield Airbag) (See page IR-55)**
39. **REMOVE ASSIST GRIP COVER (See page IR-55)**
40. **REMOVE ASSIST GRIP SUB-ASSEMBLY (See page IR-56)**
41. **REMOVE VISOR ASSEMBLY RH (See page IR-56)**
42. **REMOVE VISOR ASSEMBLY LH (See page IR-56)**
43. **REMOVE VISOR HOLDER RH (See page IR-56)**
44. **REMOVE VISOR HOLDER LH (See page IR-56)**
45. **REMOVE ROOM LIGHT ASSEMBLY (See page IR-57)**
46. **REMOVE MAP LIGHT ASSEMBLY (See page IR-58)**
47. **REMOVE FRONT PILLAR GARNISH RH (See page IR-58)**
48. **REMOVE FRONT PILLAR GARNISH LH (See page IR-59)**
49. **REMOVE INSTRUMENT PANEL FINISH PANEL END RH (See page ME-145)**
50. **REMOVE INSTRUMENT PANEL FINISH PANEL END LH (See page ME-145)**
51. **REMOVE INSTRUMENT CLUSTER FINISH PANEL (See page ME-145)**
52. **REMOVE COMBINATION METER ASSEMBLY (See page ME-146)**
53. **REMOVE GLOVE COMPARTMENT DOOR ASSEMBLY (See page IP-20)**
54. **REMOVE NO. 1 SWITCH HOLE BASE (See page IP-20)**
55. **REMOVE UPPER INSTRUMENT PANEL SUB-ASSEMBLY (See page IP-21)**
56. **REMOVE NO. 2 ANTENNA CORD SUB-ASSEMBLY (See page AV-82)**
57. **REMOVE ROOF HEADLINING ASSEMBLY**
    (a) Remove the antenna cord from the antenna cord clamp.
    (b) Disconnect the 2 connectors.
    (c) Using a clip remover, remove the 2 connectors.
    (d) w/ Curtain Shield Airbag:
        (1) Using a clip remover, remove the clip.

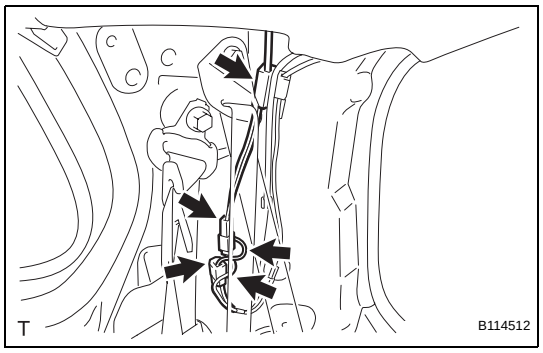

AV

(2) Disengage the 4 hooks.

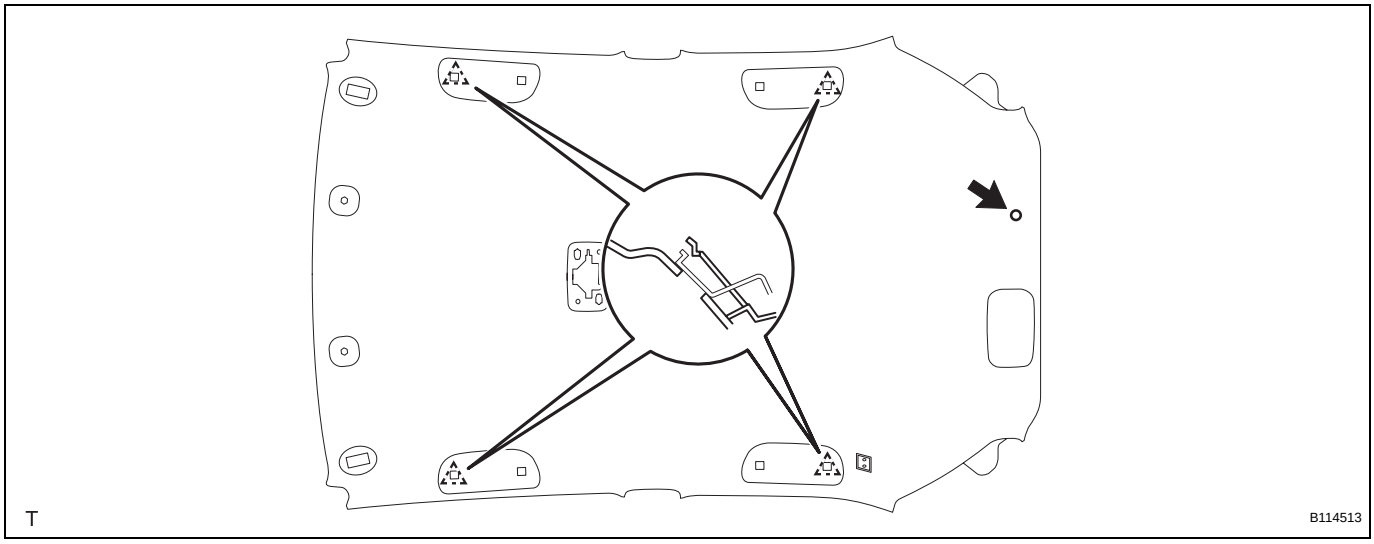

(e) w/o Curtain Shield Airbag:
(1) Using a clip remover, remove the clip.
(2) Disengage the 2 claws and the 4 hooks.

AV

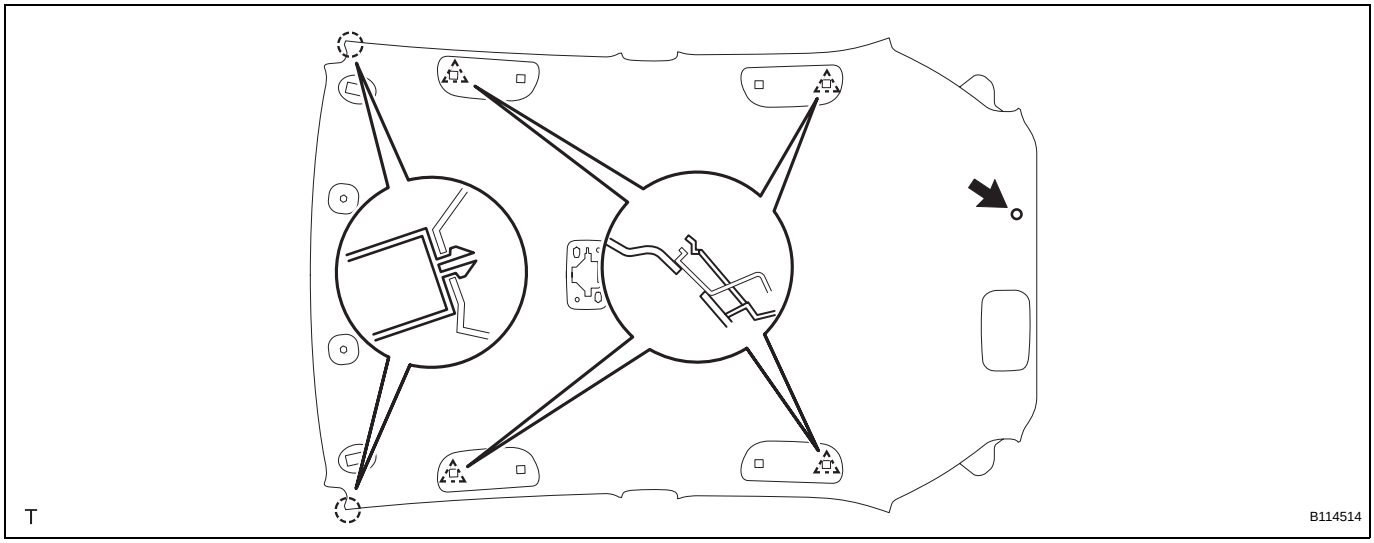

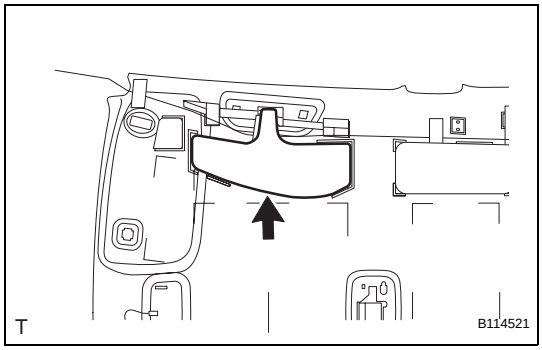

58. REMOVE NO. 2 ROOF HEADLINING PAD (w/ Curtain Shield Airbag)

(a) Remove the No. 2 roof headlining pad.

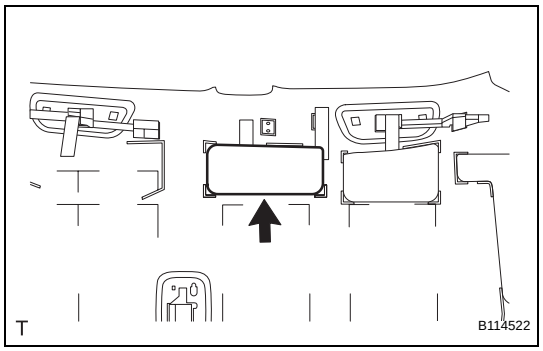

59. REMOVE NO. 3 ROOF HEADLINING PAD (w/ Curtain Shield Airbag)

(a) Remove the No. 3 roof headlining pad.

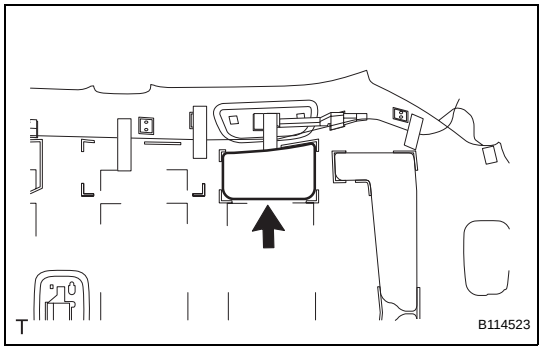

60. REMOVE NO. 4 ROOF HEADLINING PAD (w/ Curtain Shield Airbag)

(a) Remove the No. 4 roof headlining pad.

61. REMOVE ANTENNA CORD SUB-ASSEMBLY

(a) w/ Curtain Shield Airbag:
   (1) Remove the 6 pieces of tape.
   (2) Remove the antenna cord from the cutout of the roof headlining.
   (3) Remove the antenna cord from the 3 claws of the front and rear side rail spacers.

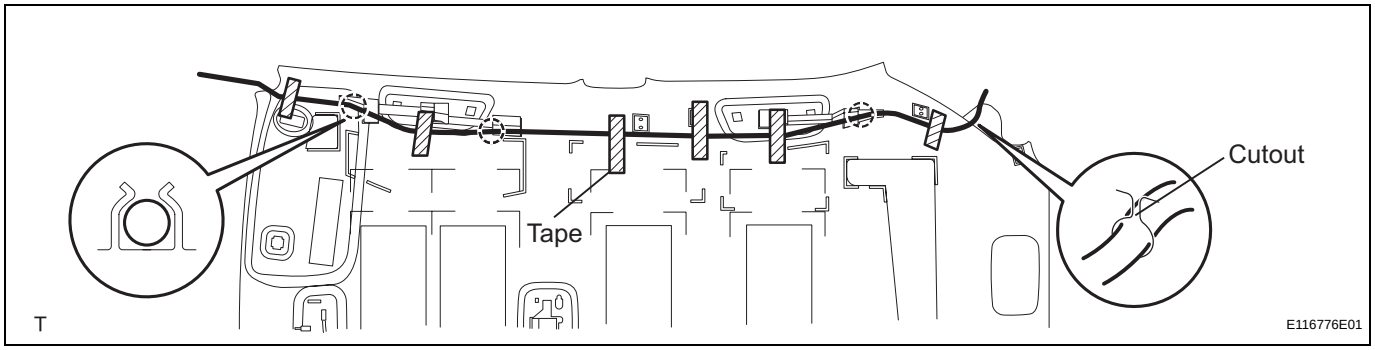

(b) w/o Curtain Shield Airbag:
   (1) Remove the 4 pieces of tape.
   (2) Remove the antenna cord from the cutout of the roof headlining.
   (3) Remove the antenna cord from the 5 claws of the front and rear side rail spacers.

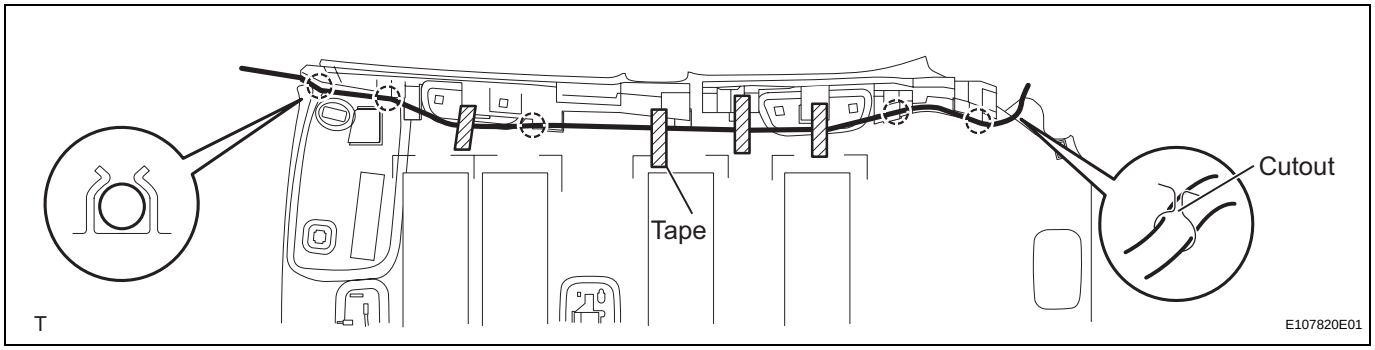

AV

INSTALLATION

CAUTION:
Some of these service operations affect the SRS airbag system. Read the precautionary notices concerning the SRS airbag system before servicing (See page RS-1).
NOTICE:
Always use "Torx" socket wrench E10 when installing the rear seat.

1. INSTALL ANTENNA CORD SUB-ASSEMBLY

(a) w/ Curtain Shield Airbag:

(1) Install the part of the antenna cord marked with red positioning tape into claw A of the front side rail spacer.

(2) Install the antenna cord positioning tapes into the 2 claws of the front and rear side rail spacers.

(3) Insert the antenna cord positioning tape into the cutout of the roof headlining.

(4) Align the locating tapes on the antenna cord with the markings on the roof headlining.

(5) Install the antenna cord onto the roof headlining with 6 new pieces of tape.

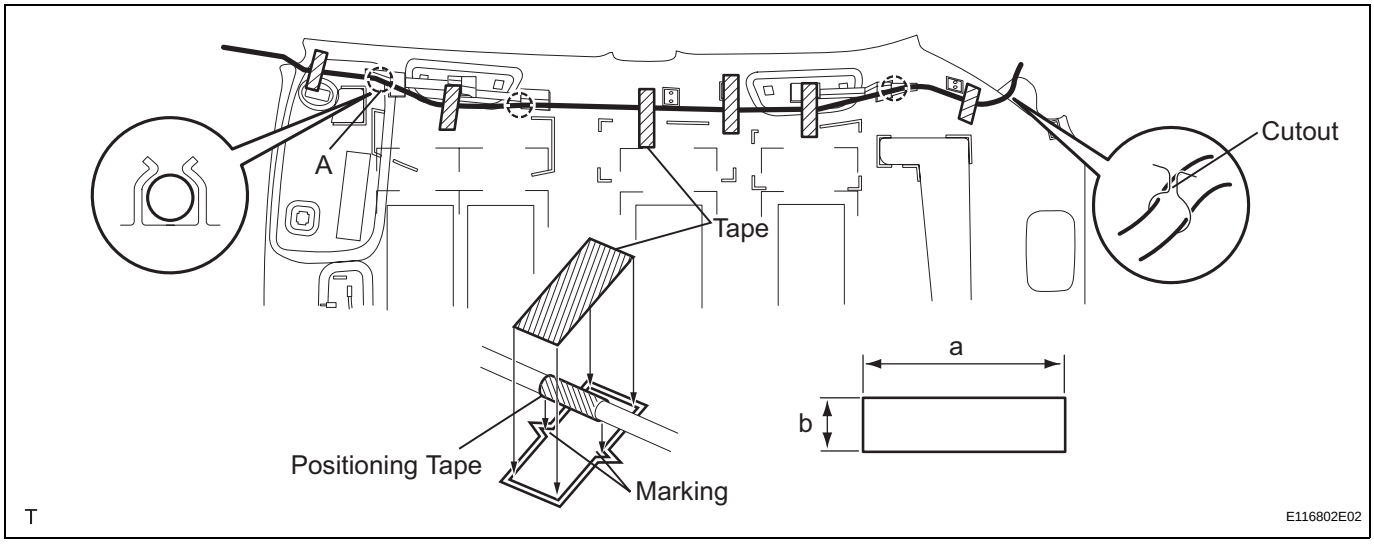

Tape size:

Mark	Measurement
a	80 mm (3.15 in.)
b	20 mm (0.787 in.)

NOTICE:
- **Apply the tape securely in place.**
- **Do not touch the adhesive surface when applying the tape to prevent adhesion failure.**

(b) w/o Curtain Shield Airbag:

(1) Install the part of the antenna cord marked with red positioning tape into claw A of the front side rail spacer.

(2) Install the antenna cord positioning tapes into the 4 claws of the front and rear side rail spacers.
(3) Insert the antenna cord positioning tape into the cutout of the roof headlining.
(4) Align the locating tapes on the antenna cord with the markings on the roof headlining.
(5) Install the antenna cord onto the roof headlining with 4 new pieces of tape.

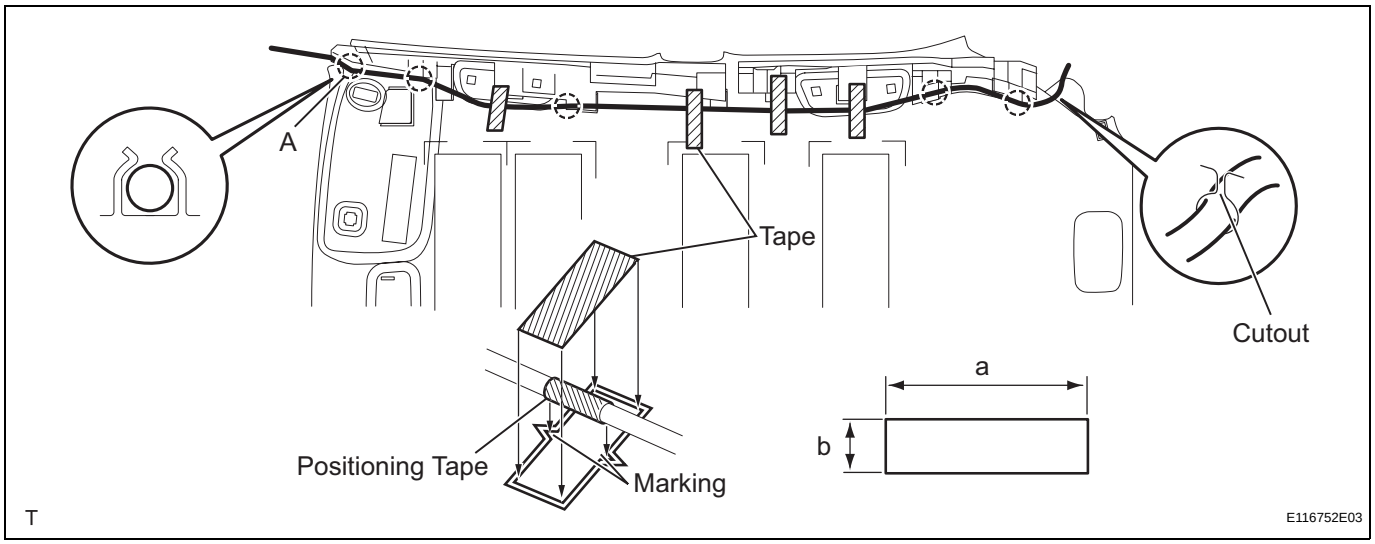

Tape size:

Mark	Measurement
a	80 mm (3.15 in.)
b	20 mm (0.787 in.)

NOTICE:
- **Apply the tape securely in place.**
- **Do not touch the adhesive surface when applying the tape to prevent adhesion failure.**

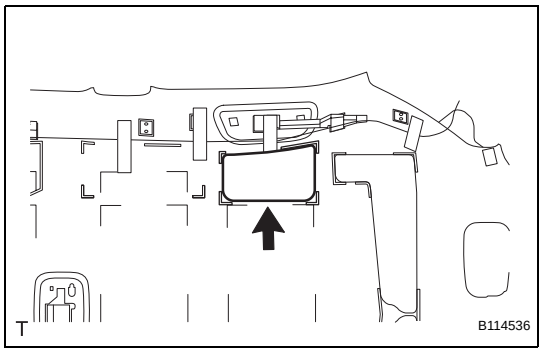

2. INSTALL NO. 4 ROOF HEADLINING PAD (w/ Curtain Shield Airbag)

(a) Align a new No. 4 roof headlining pad with the markings of the roof headlining and install it onto the roof headlining.

AV

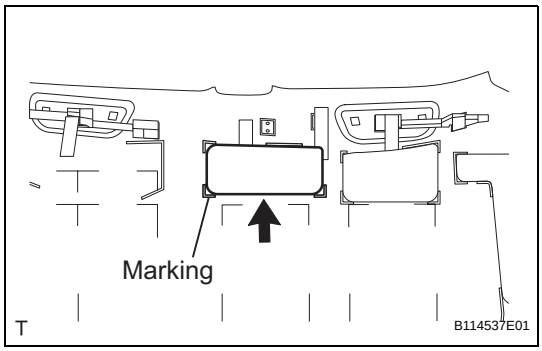

3. INSTALL NO. 3 ROOF HEADLINING PAD (w/ Curtain Shield Airbag)

(a) Align a new No. 3 roof headlining pad with the markings of the roof headlining and install it onto the roof headlining.

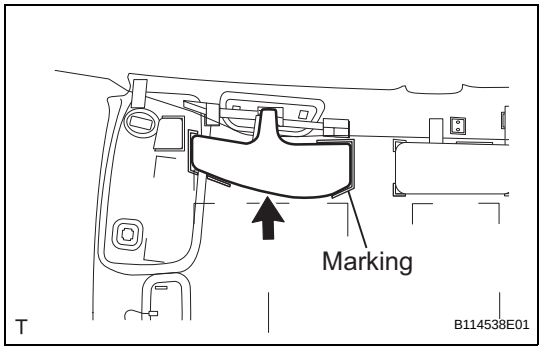

4. INSTALL NO. 2 ROOF HEADLINING PAD (w/ Curtain Shield Airbag)

(a) Align a new No. 2 roof headlining pad with the markings of the roof headlining and install it onto the roof headlining.

5. INSTALL ROOF HEADLINING ASSEMBLY

(a) w/ Curtain Shield Airbag:
  (1) Engage the 4 hooks and install the roof headlining.
  (2) Install the clip.

AV

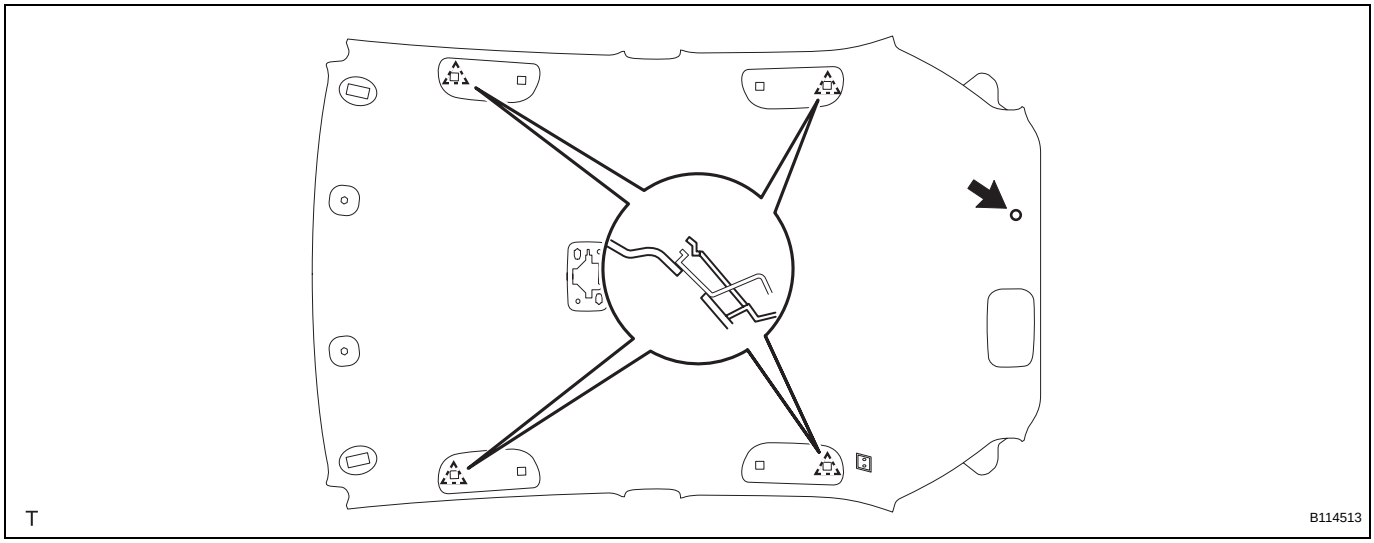

(b) w/o Curtain Shield Airbag:
  (1) Engage the 2 claws and the 4 hooks and install the roof headlining.

(2) Install the clip.

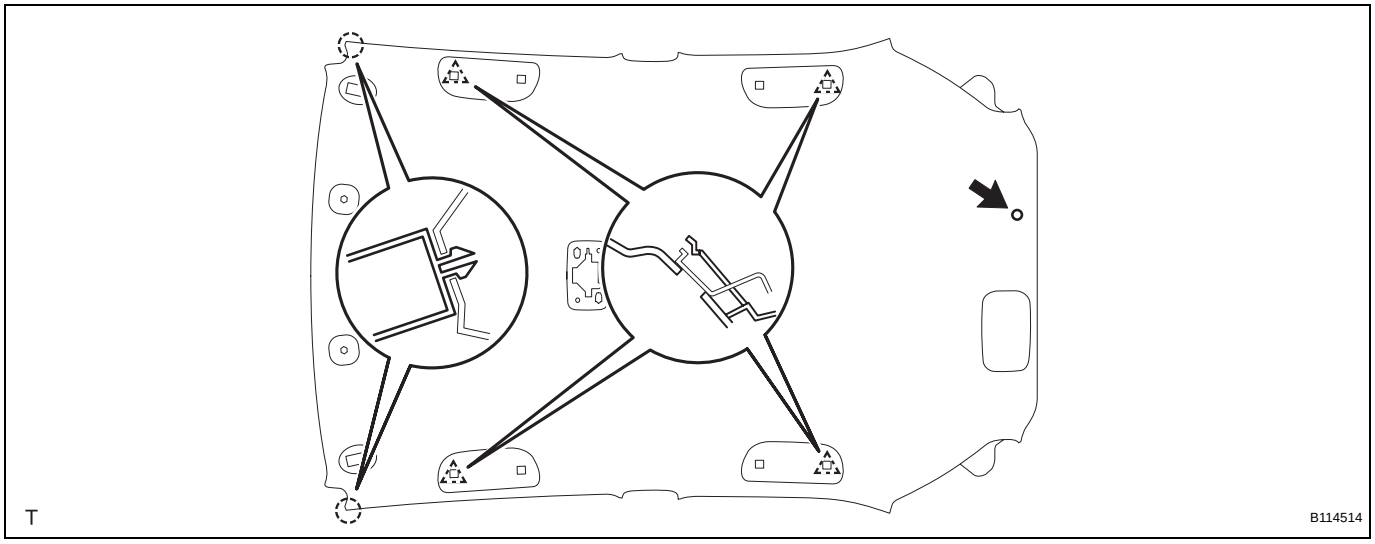

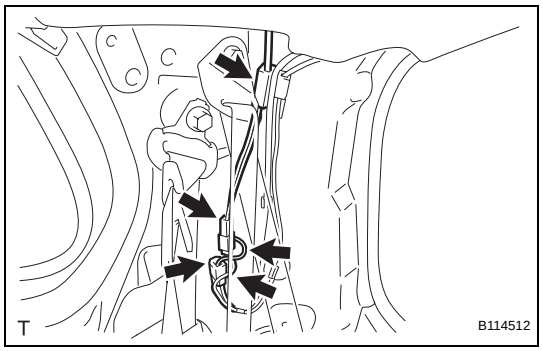

(c) Install the 2 connectors.
(d) Connect the 2 connectors.
(e) Install the antenna cord onto the antenna cord clamp.

6. **INSTALL NO. 2 ANTENNA CORD SUB-ASSEMBLY (See page AV-88)**
7. **INSTALL UPPER INSTRUMENT PANEL SUB-ASSEMBLY (See page IP-29)**
8. **INSTALL NO. 1 SWITCH HOLE BASE (See page IP-32)**
9. **INSTALL GLOVE COMPARTMENT DOOR ASSEMBLY (See page IP-32)**
10. **INSTALL COMBINATION METER ASSEMBLY (See page ME-148)**
11. **INSTALL INSTRUMENT CLUSTER FINISH PANEL (See page ME-148)**
12. **INSTALL INSTRUMENT PANEL FINISH PANEL END RH (See page ME-149)**
13. **INSTALL INSTRUMENT PANEL FINISH PANEL END LH (See page ME-149)**
14. **INSTALL FRONT PILLAR GARNISH RH (See page IR-71)**
15. **INSTALL FRONT PILLAR GARNISH LH (See page IR-72)**
16. **INSTALL MAP LIGHT ASSEMBLY (See page IR-73)**
17. **INSTALL ROOM LIGHT ASSEMBLY (See page IR-74)**
18. **INSTALL VISOR HOLDER RH (See page IR-75)**
19. **INSTALL VISOR HOLDER LH (See page IR-75)**
20. **INSTALL VISOR ASSEMBLY RH (See page IR-75)**
21. **INSTALL VISOR ASSEMBLY LH (See page IR-75)**

22. **INSTALL ASSIST GRIP SUB-ASSEMBLY (See page IR-75)**
23. **INSTALL ASSIST GRIP COVER (See page IR-75)**
24. **INSTALL ROOF HEADLINING SERVICE HOLE COVER (w/o Curtain Shield Airbag) (See page IR-76)**
25. **INSTALL SEAT BELT ANCHOR COVER (See page SB-160)**
26. **INSTALL REAR ROOF SIDE RAIL GARNISH RH (See page IR-115)**
27. **INSTALL REAR ROOF SIDE RAIL GARNISH LH (See page IR-115)**
28. **INSTALL ROOF SIDE INNER GARNISH RH (See page IR-115)**
29. **INSTALL ROOF SIDE INNER GARNISH LH (See page IR-116)**
30. **INSTALL REAR CENTER SEAT OUTER BELT ASSEMBLY (See page IR-78)**
31. **INSTALL CENTER PILLAR UPPER GARNISH RH (See page IR-116)**
32. **INSTALL CENTER PILLAR UPPER GARNISH LH (See page IR-116)**
33. **INSTALL FRONT SEAT OUTER BELT ASSEMBLY RH (See page IR-117)**
34. **INSTALL FRONT SEAT OUTER BELT ASSEMBLY LH (See page IR-117)**
35. **INSTALL SEAT BELT ANCHOR COVER CAP (See page IR-117)**
36. **INSTALL DECK TRIM SIDE PANEL ASSEMBLY RH (See page IR-117)**
37. **INSTALL DECK TRIM SIDE PANEL ASSEMBLY LH (See page IR-118)**
38. **INSTALL REAR SEAT OUTER BELT ASSEMBLY RH (See page IR-118)**
39. **INSTALL REAR SEAT OUTER BELT ASSEMBLY LH (See page IR-118)**
40. **INSTALL REAR DECK TRIM COVER (See page IR-82)**
41. **INSTALL FRONT QUARTER TRIM PANEL ASSEMBLY RH (See page IR-118)**
42. **INSTALL FRONT QUARTER TRIM PANEL ASSEMBLY LH (See page IR-119)**
43. **INSTALL FRONT DOOR OPENING TRIM WEATHERSTRIP RH (See page IR-119)**
44. **INSTALL FRONT DOOR OPENING TRIM WEATHERSTRIP LH (See page IR-119)**

45. INSTALL COWL SIDE TRIM BOARD RH (See page IR-81)

46. INSTALL COWL SIDE TRIM BOARD LH (See page IR-81)

47. INSTALL INSTRUMENT PANEL UNDER COVER SUB-ASSEMBLY RH (See page IR-81)

48. INSTALL INSTRUMENT PANEL UNDER COVER SUB-ASSEMBLY LH (See page IR-82)

49. INSTALL FRONT DOOR SCUFF PLATE RH (See page IR-119)

50. INSTALL FRONT DOOR SCUFF PLATE LH (See page IR-119)

51. INSTALL REAR SEAT ASSEMBLY RH (for 60/40 Slide Reclining Hold Down Seat Type) (See page SE-102)

52. INSTALL REAR SEAT ASSEMBLY LH (for 60/40 Split Seat Type) (See page SE-84)

53. INSTALL NO. 2 REAR SEAT LEG COVER (for 60/40 Split Seat Type) (See page SE-85)

54. INSTALL NO. 1 REAR SEAT LEG COVER (for 60/40 Split Seat Type)

(a) for RH Side:

(1) Install the No. 1 rear seat leg cover (See page SE-103).

(b) for LH Side:

(1) Install the No. 1 rear seat leg cover (See page SE-85).

55. INSTALL REAR SEATBACK ASSEMBLY (for Hold Down Seat Type) (See page SE-123)

56. INSTALL REAR SEAT CUSHION COVER PAD SUB-ASSEMBLY (for Hold Down Seat Type) (See page SE-122)

57. INSTALL DECK FLOOR BOX RH (See page IR-83)

58. INSTALL DECK FLOOR BOX LH (See page IR-83)

59. INSTALL DECK BOARD SUB-ASSEMBLY (See page IR-83)

60. INSTALL PACKAGE TRAY TRIM PANEL ASSEMBLY (See page IR-83)

61. CONNECT CABLE TO NEGATIVE BATTERY TERMINAL
Torque: 5.4 N*m (55 kgf*cm, 48 in.*lbf)

62. CHECK SRS WARNING LIGHT
(See page RS-31)

RADIO ANTENNA POLE (for Hatchback)

COMPONENTS

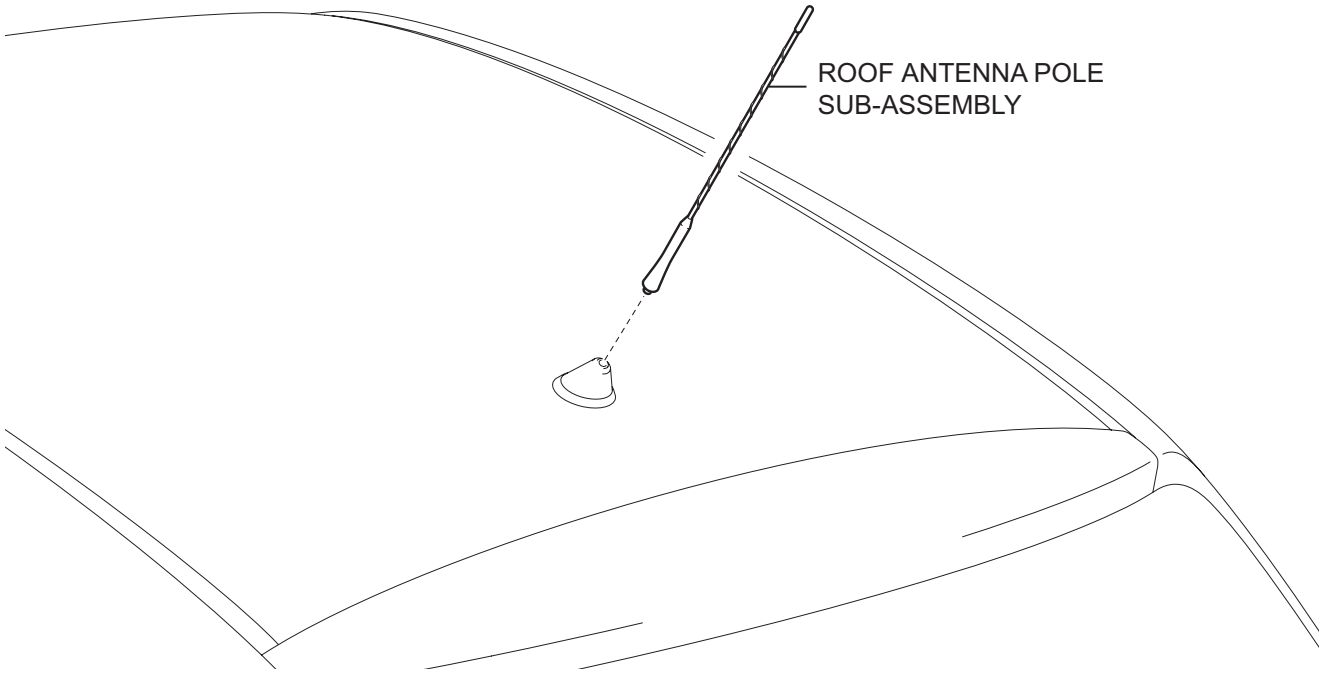

P

B138656E01

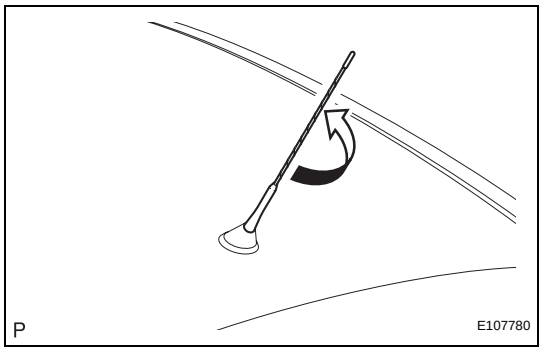

REMOVAL

1. REMOVE ROOF ANTENNA POLE SUB-ASSEMBLY

(a) Remove the roof antenna pole by turning it in the direction of the arrow shown in the illustration.

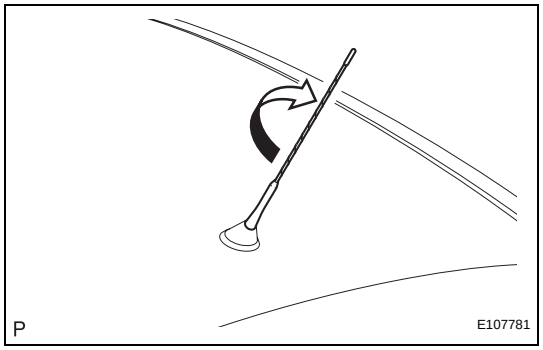

INSTALLATION

1. INSTALL ROOF ANTENNA POLE SUB-ASSEMBLY

(a) Install the roof antenna pole by turning it in the direction of the arrow shown in the illustration.

AMPLIFIER ANTENNA (for Sedan)

COMPONENTS

for 60/40 Split Seat Type:

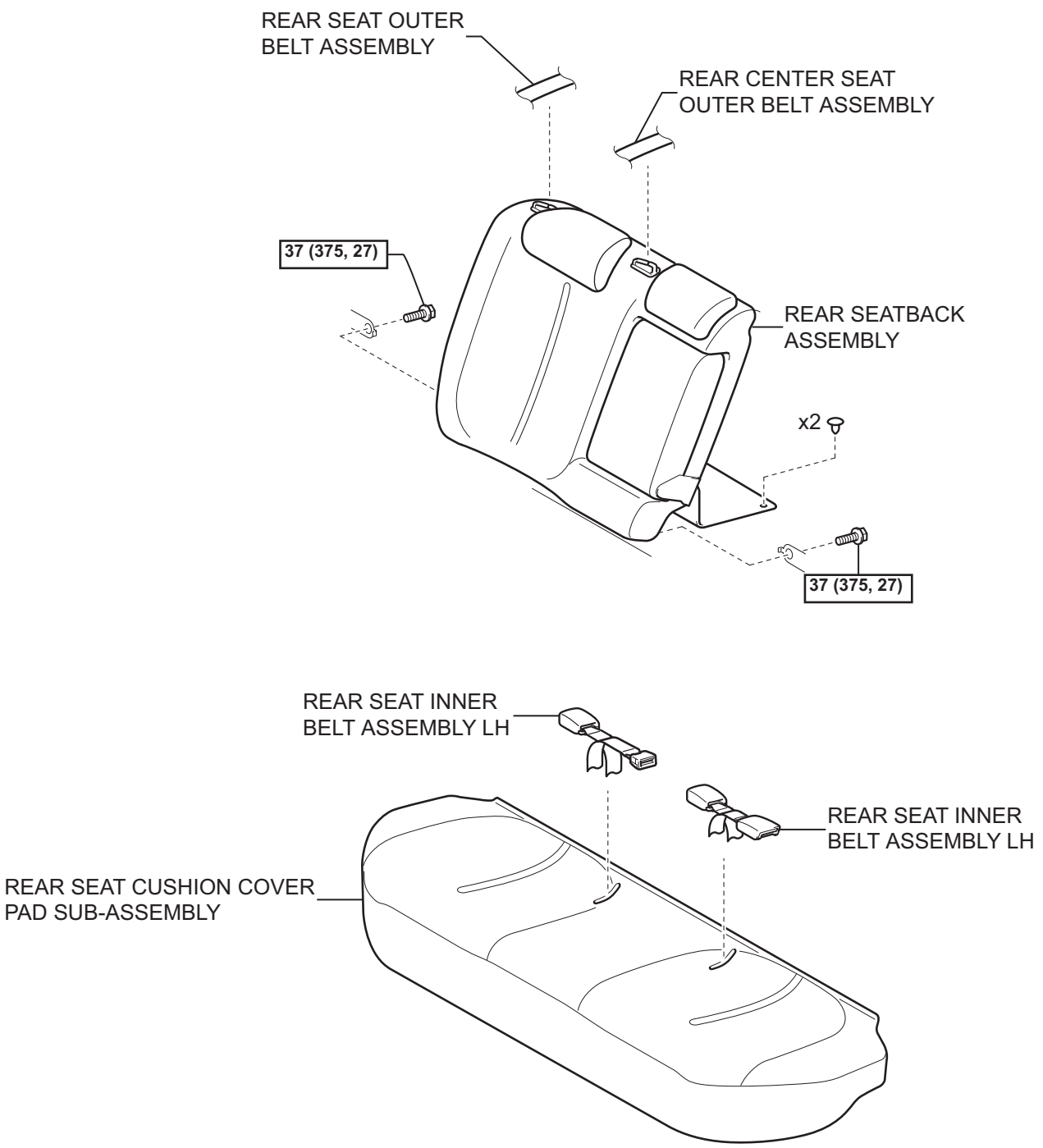

N*m (kgf*cm, ft*lbf) : Specified torque

T

B134942E04

AV

for Fixed Seat Type:

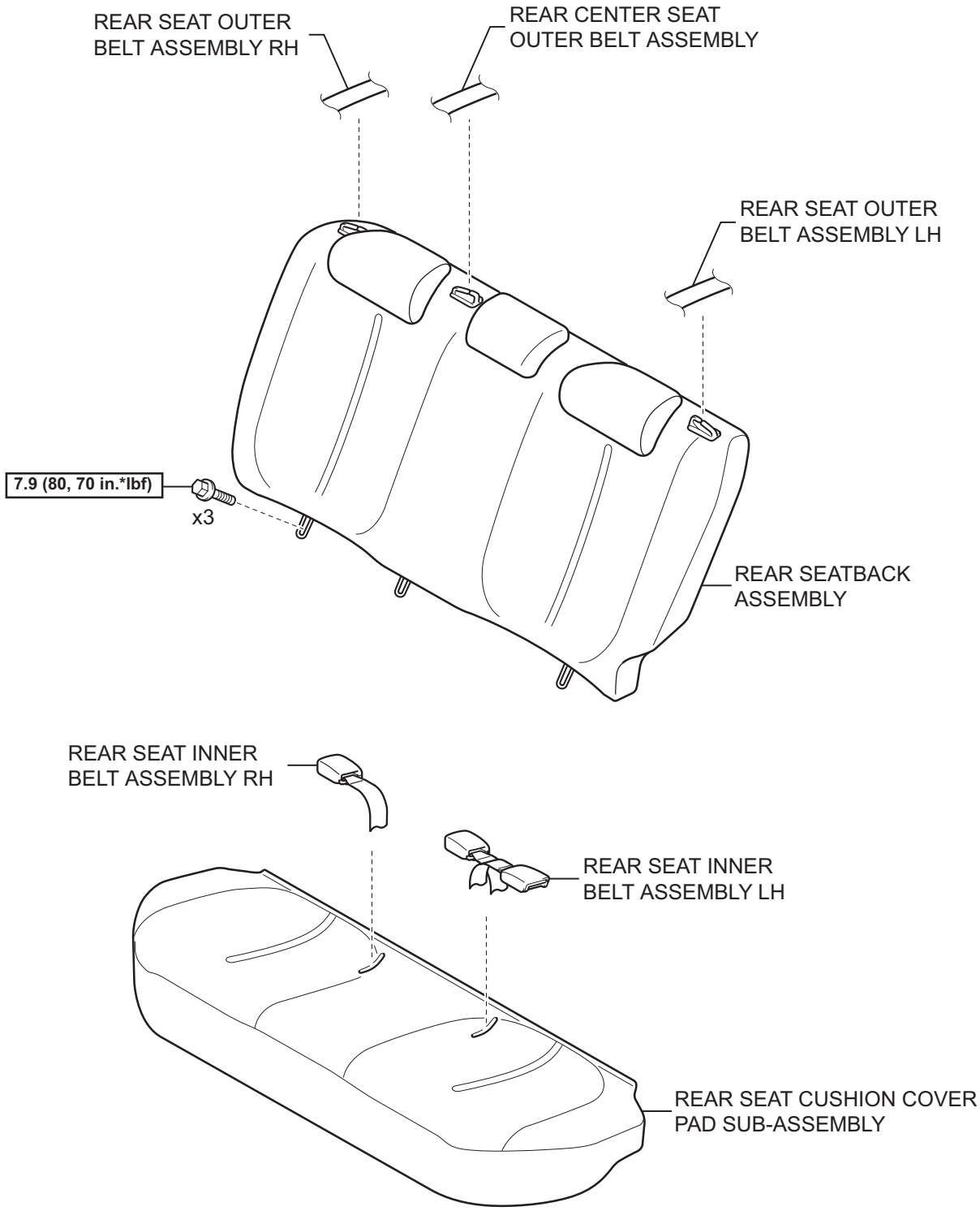

N*m (kgf*cm, ft*lbf) : Specified torque

T

B138611E01

for 60/40 Split Seat Type:

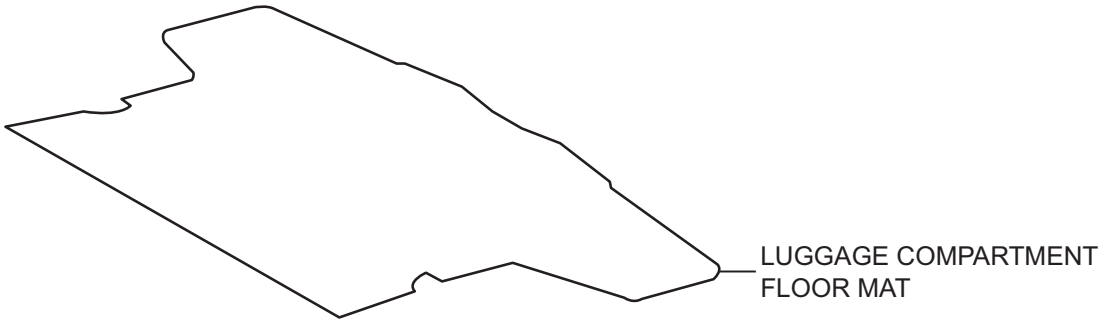

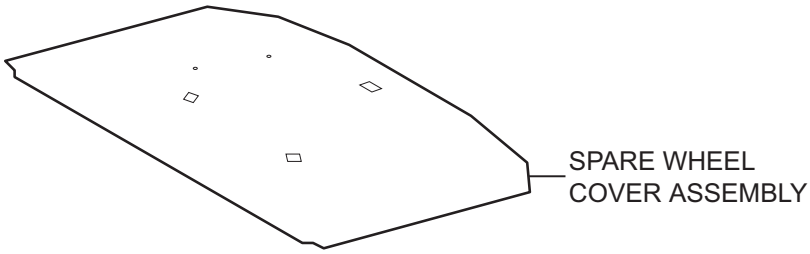

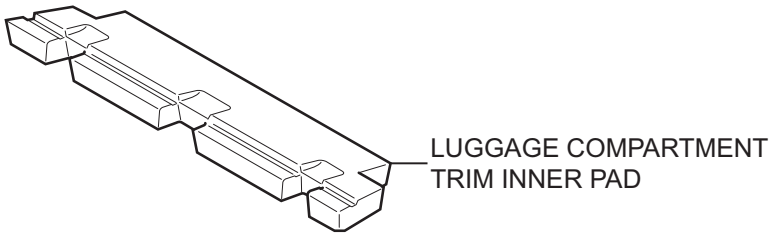

for Grand Tire:

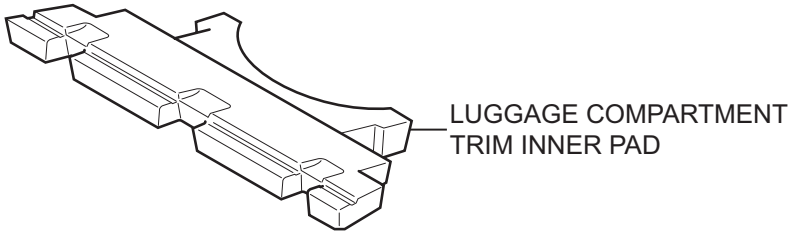

T

B138565E01

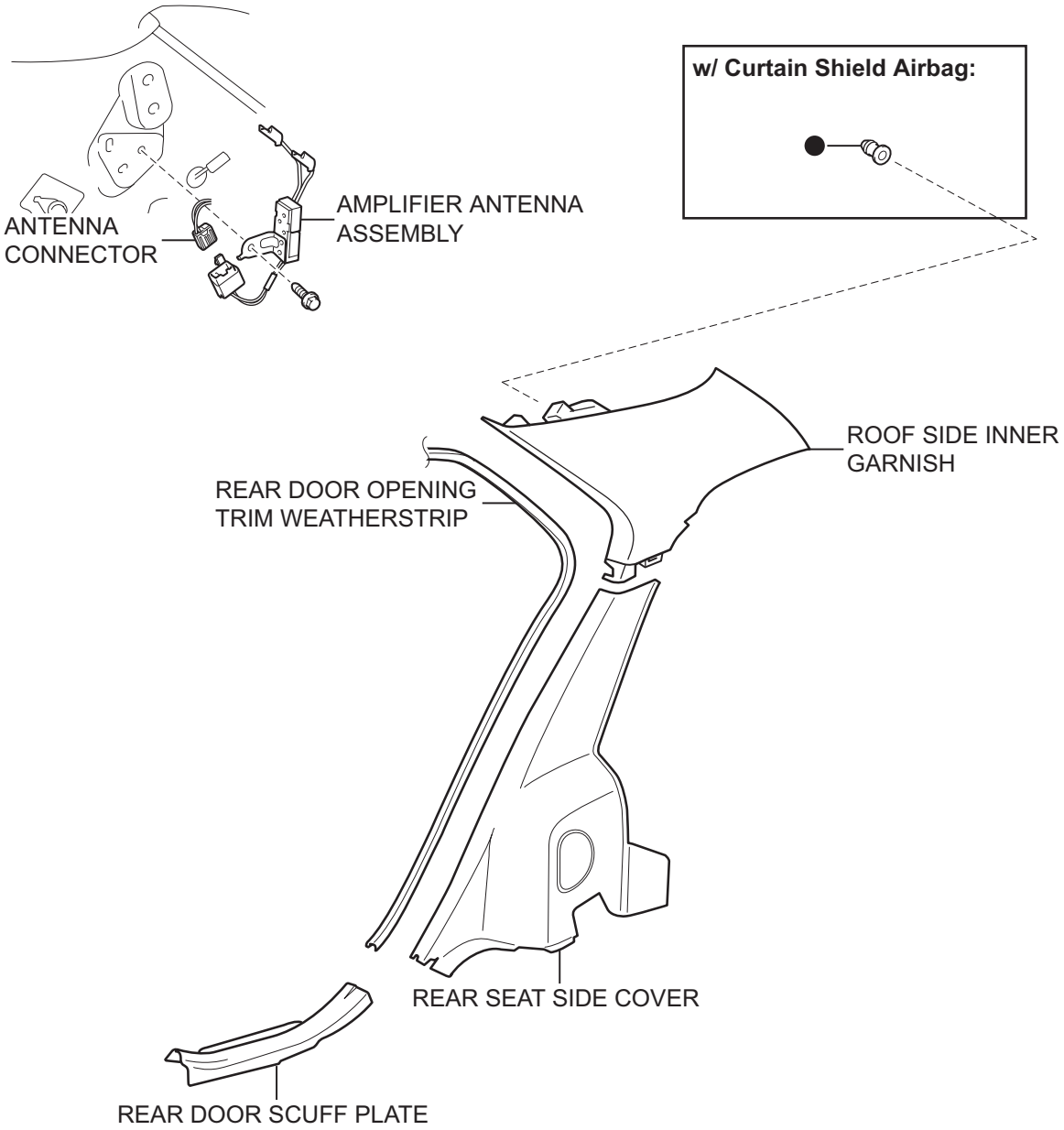

● Non-reusable part

T

B134977E01

AV

REMOVAL

1. DISCONNECT CABLE FROM NEGATIVE BATTERY TERMINAL

2. REMOVE REAR SEAT CUSHION COVER PAD SUB-ASSEMBLY

(a) for 60/40 Split Seat Type:
  (1) Remove the rear seat cushion cover pad sub-assembly (See page SE-46).

(b) for Fixed Seat Type:
  (1) Remove the rear seat cushion cover pad sub-assembly (See page SE-106).

3. REMOVE REAR SEATBACK ASSEMBLY

(a) for 60/40 Split Seat Type:
  (1) Remove the rear seatback assembly (See page SE-57).

(b) for Fixed Seat Type:
  (1) Remove the rear seatback assembly (See page SE-106).

4. REMOVE LUGGAGE COMPARTMENT FLOOR MAT (for 60/40 Split Seat Type) (See page ED-133)

5. REMOVE SPARE WHEEL COVER ASSEMBLY (for 60/40 Split Seat Type) (See page ED-133)

6. REMOVE LUGGAGE COMPARTMENT TRIM INNER PAD (for 60/40 Split Seat Type) (See page ED-134)

7. REMOVE REAR DOOR SCUFF PLATE (See page IR-15)

8. REMOVE REAR DOOR OPENING TRIM WEATHERSTRIP (See page AV-173)

9. REMOVE REAR SEAT SIDE COVER (See page IR-16)

10. REMOVE ROOF SIDE INNER GARNISH (See page IR-16)

11. REMOVE AMPLIFIER ANTENNA ASSEMBLY

(a) Disconnect the antenna cord connector.
(b) Disconnect the 2 amplifier antenna connectors.
(c) Disengage the clamp.
(d) Remove the bolt and the amplifier antenna.

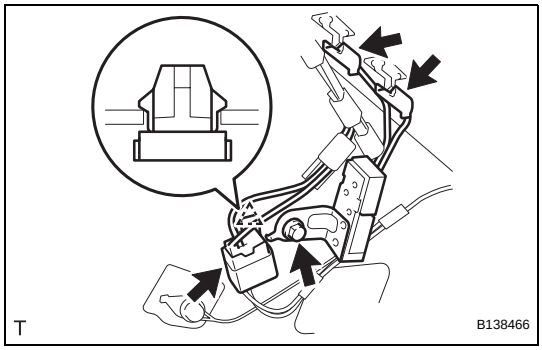

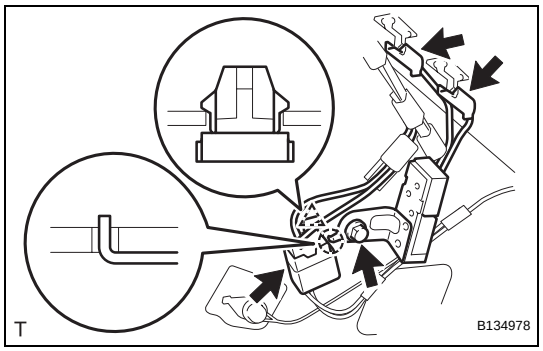

INSTALLATION

1. **INSTALL AMPLIFIER ANTENNA ASSEMBLY**
   (a) Insert the hook into the body hole and install the amplifier antenna with the bolt.
   (b) Engage the clamp.
   (c) Connect the 2 amplifier antenna connectors.
   (d) Connect the antenna cord connector.
2. **INSTALL ROOF SIDE INNER GARNISH (See page IR-32)**
3. **INSTALL REAR SEAT SIDE COVER (See page IR-33)**
4. **INSTALL REAR DOOR OPENING TRIM WEATHERSTRIP (See page AV-175)**
5. **INSTALL REAR DOOR SCUFF PLATE (See page IR-34)**
6. **INSTALL LUGGAGE COMPARTMENT TRIM INNER PAD (for 60/40 Split Seat Type) (See page ED-136)**
7. **INSTALL SPARE WHEEL COVER ASSEMBLY (for 60/40 Split Seat Type) (See page ED-137)**
8. **INSTALL LUGGAGE COMPARTMENT FLOOR MAT (for 60/40 Split Seat Type) (See page ED-137)**
9. **INSTALL REAR SEATBACK ASSEMBLY**
   (a) for 60/40 Split Seat Type:
      (1) Install the rear seatback assembly (See page SE-65).
   (b) for Fixed Seat Type:
      (1) Install the rear seatback assembly (See page SE-108).
10. **INSTALL REAR SEAT CUSHION COVER PAD SUB-ASSEMBLY**
    (a) for 60/40 Split Seat Type:
       (1) Install the rear seat cushion cover pad sub-assembly (See page SE-53).
    (b) for Fixed Seat Type:
       (1) Install the rear seat cushion cover pad sub-assembly (See page SE-109).
11. **CONNECT CABLE TO NEGATIVE BATTERY TERMINAL**
    Torque: 5.4 N*m (55 kgf*cm, 48 in.*lbf)

AMPLIFIER ANTENNA (for Hatchback 5 Door)

COMPONENTS

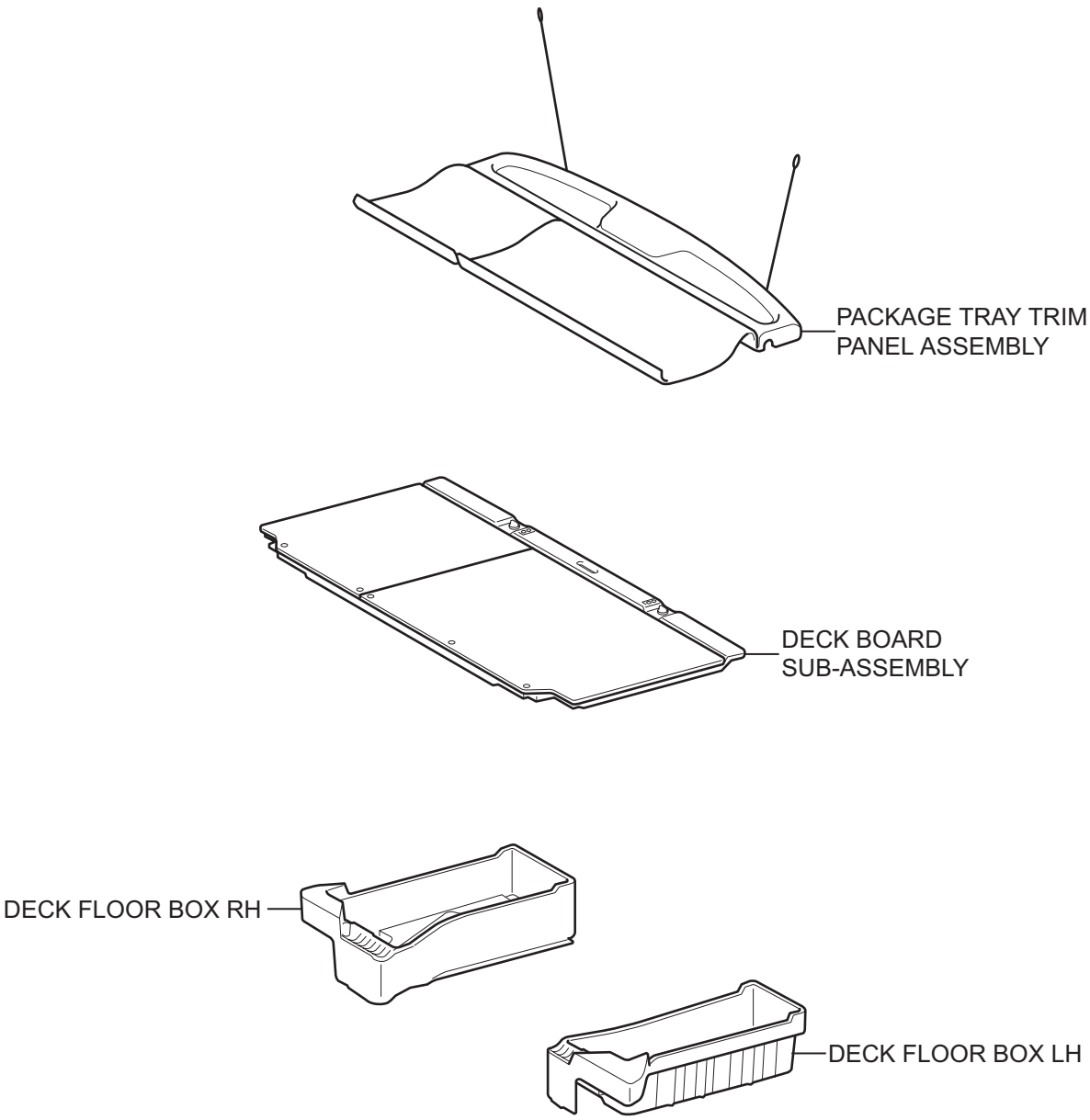

T

B114273E01

for 60/40 Split Seat Type:

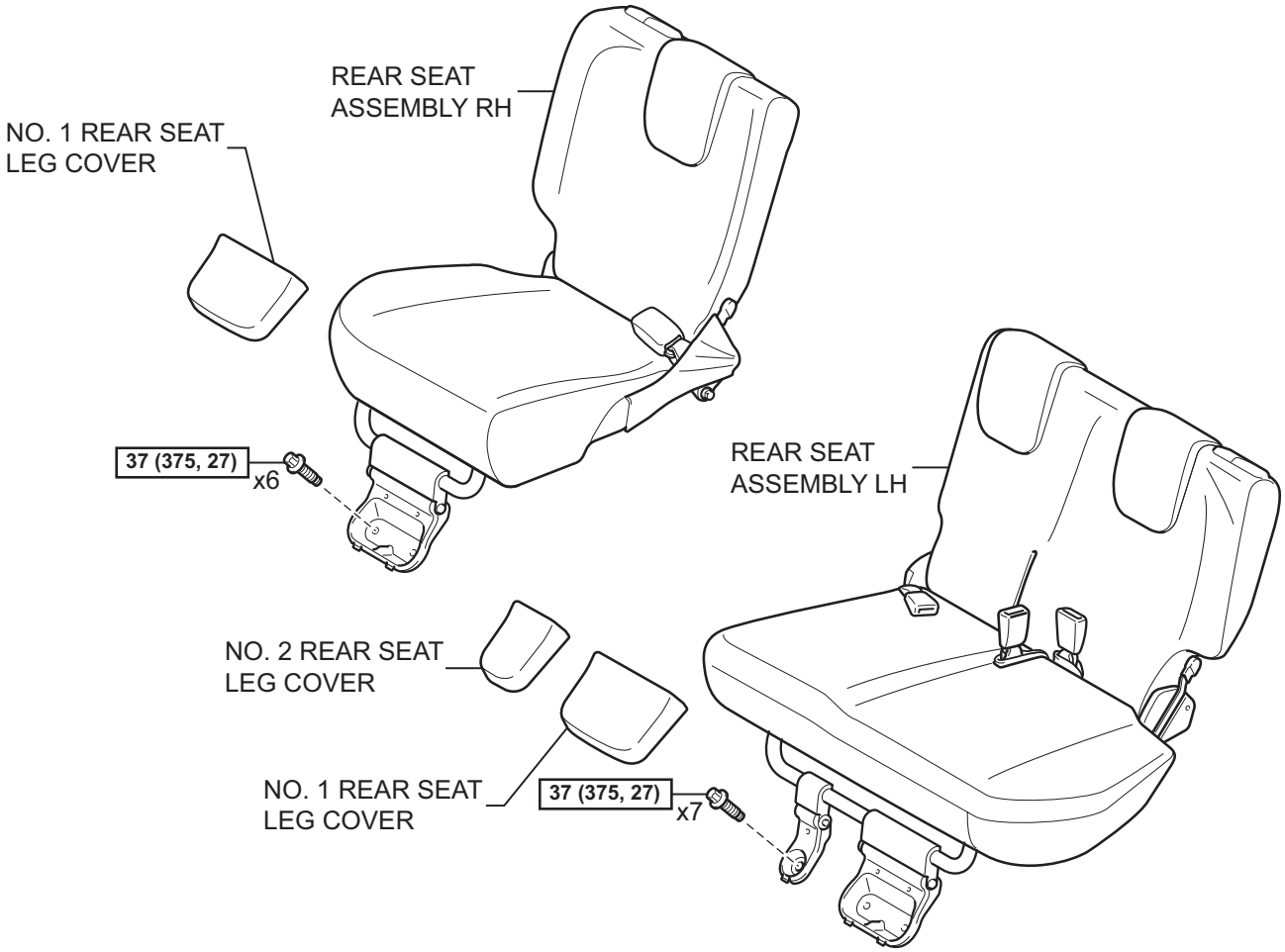

for Hold Down Seat Type:

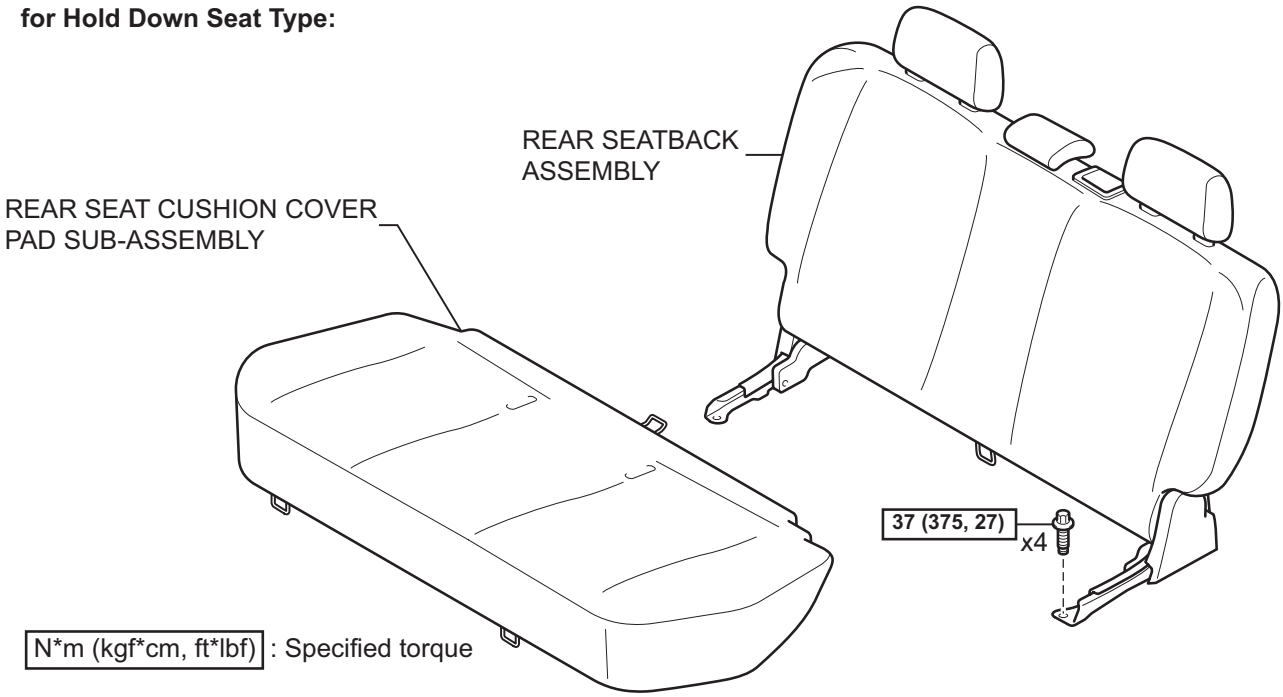

N*m (kgf*cm, ft*lbf) : Specified torque

T

B121713E03

AV

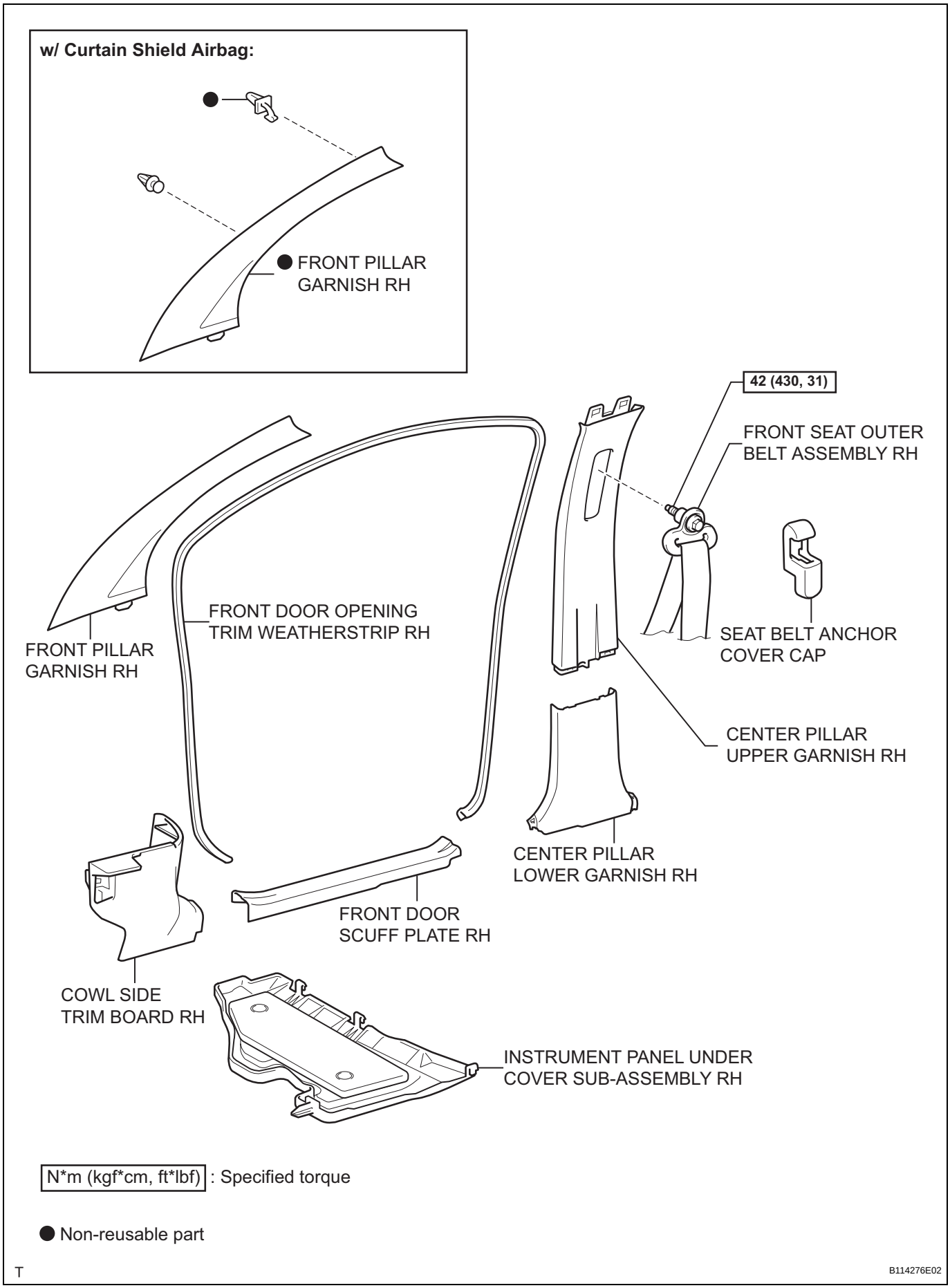

N*m (kgf*cm, ft*lbf) : Specified torque

● Non-reusable part

T

B114276E02

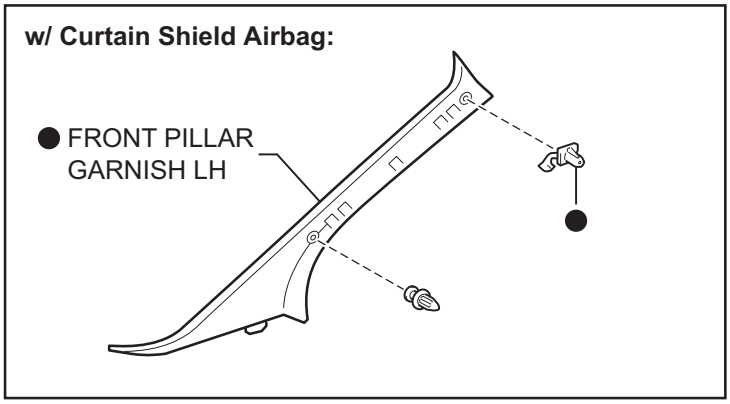

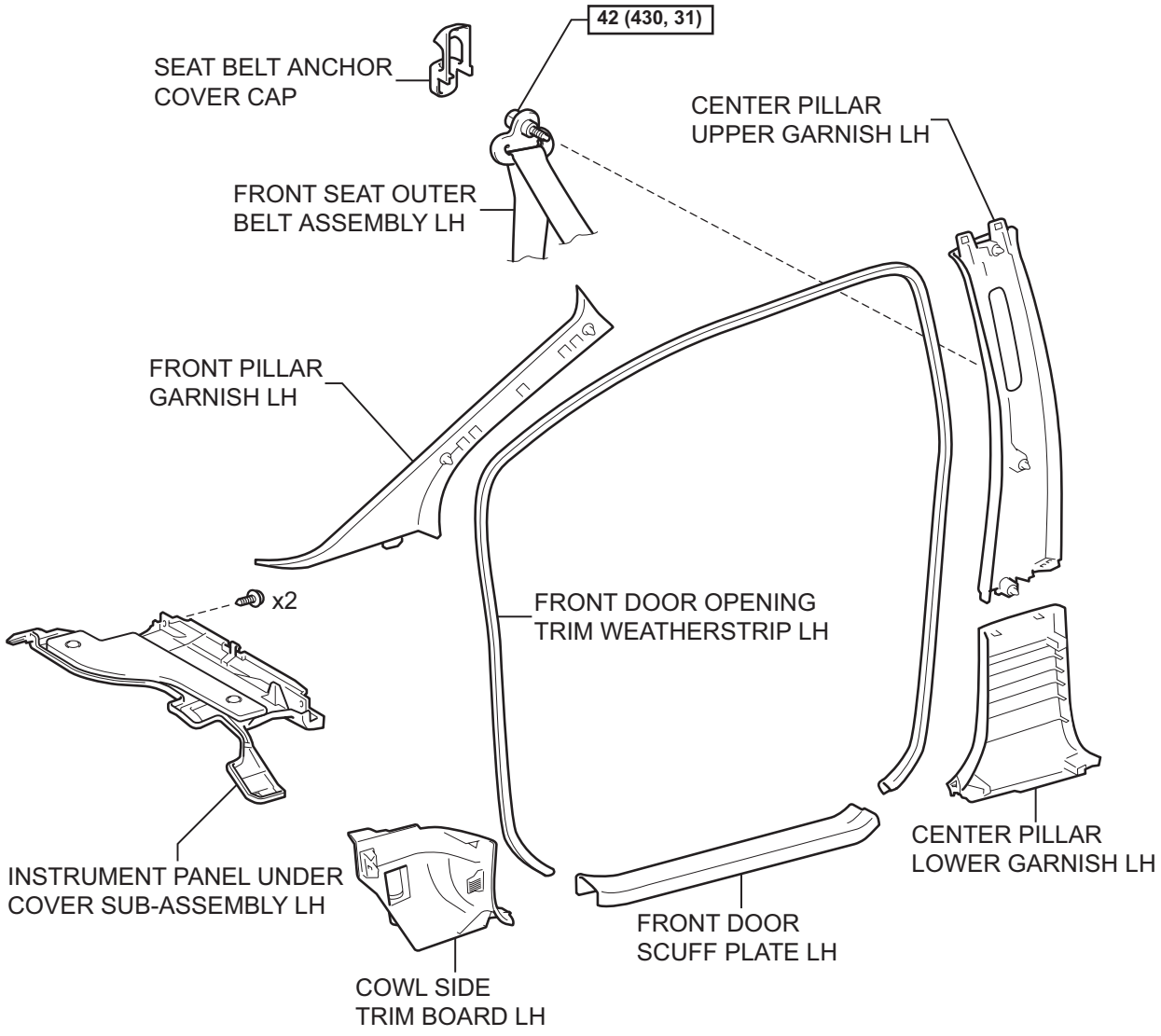

N*m (kgf*cm, ft*lbf) : Specified torque

● Non-reusable part

T

B114277E02

AV

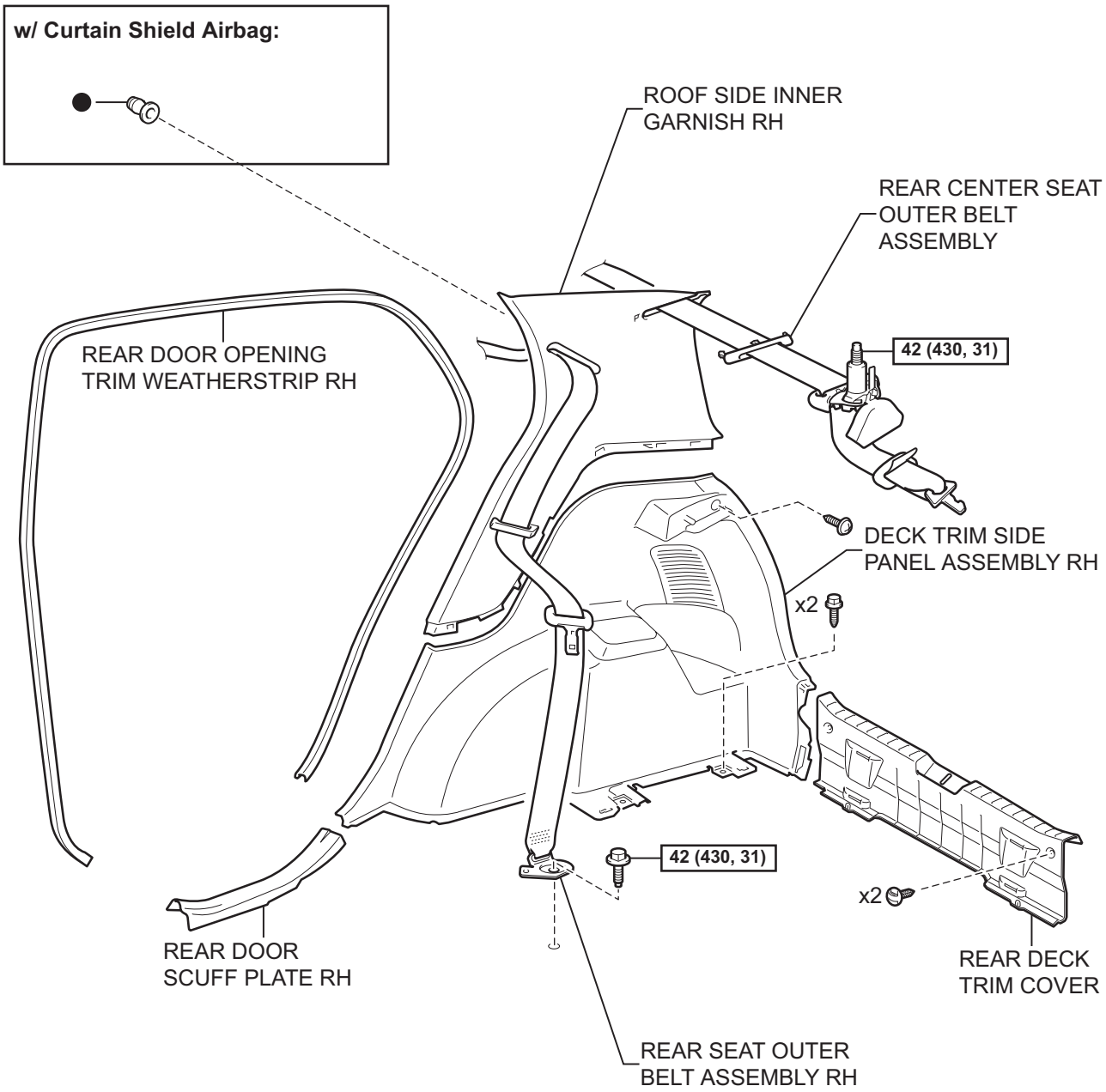

N*m (kgf*cm, ft*lbf) : Specified torque

● Non-reusable part

T

B114274E07

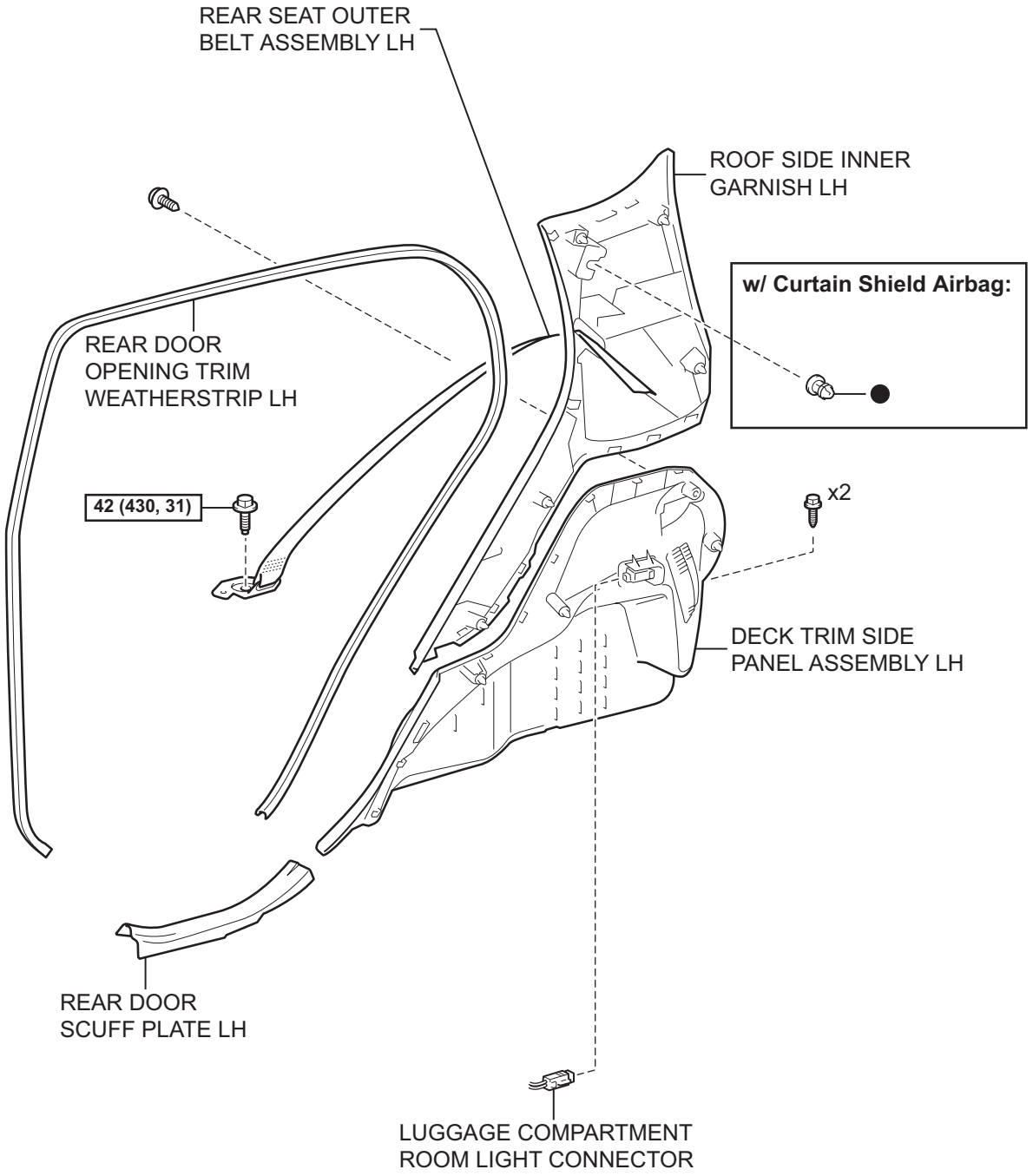

N*m (kgf*cm, ft*lbf) : Specified torque

● Non-reusable part

T

B114275E11

w/ Curtain Shield Airbag:

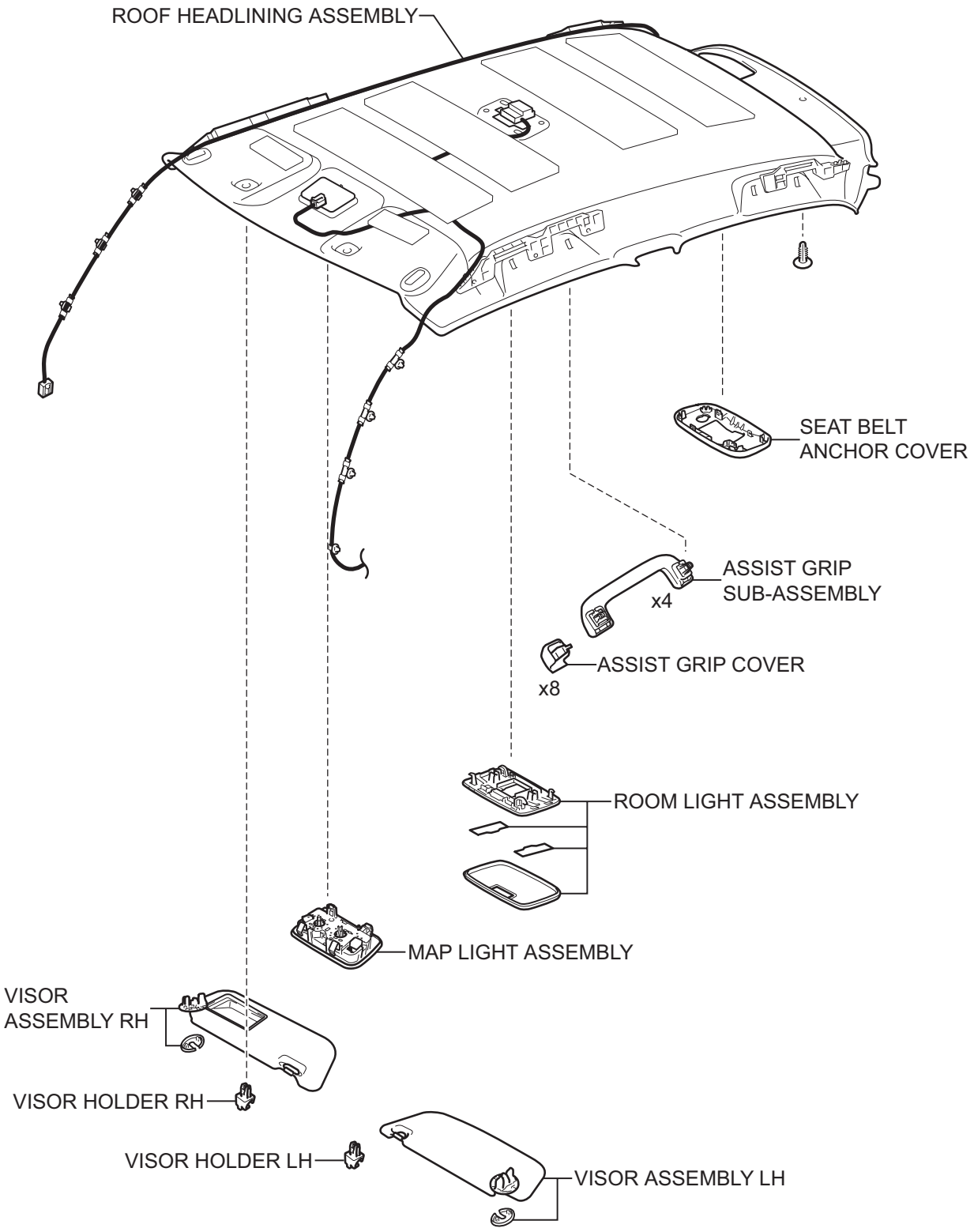

T

B138686E01

w/o Curtain Shield Airbag:

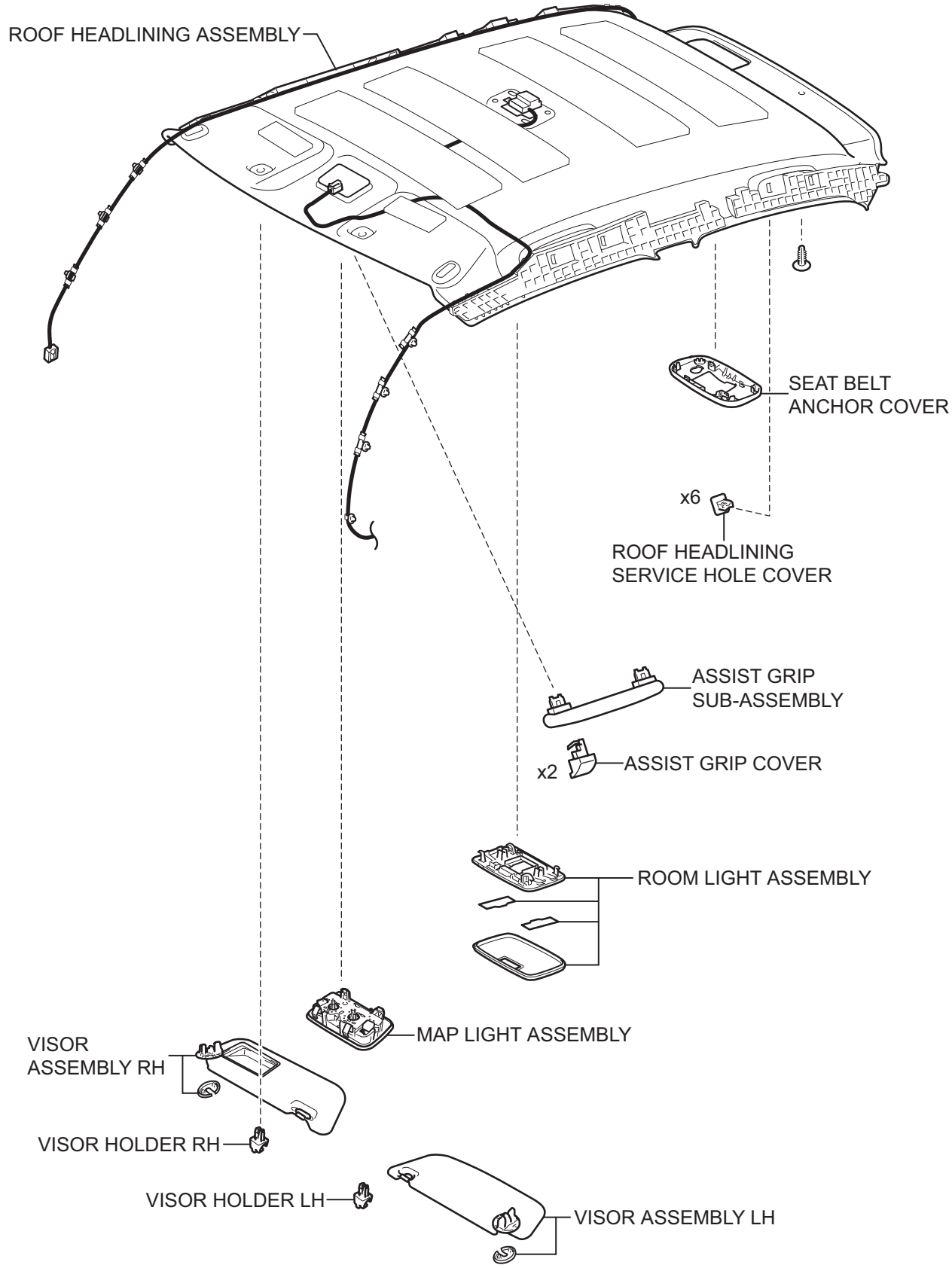

T

B138687E01

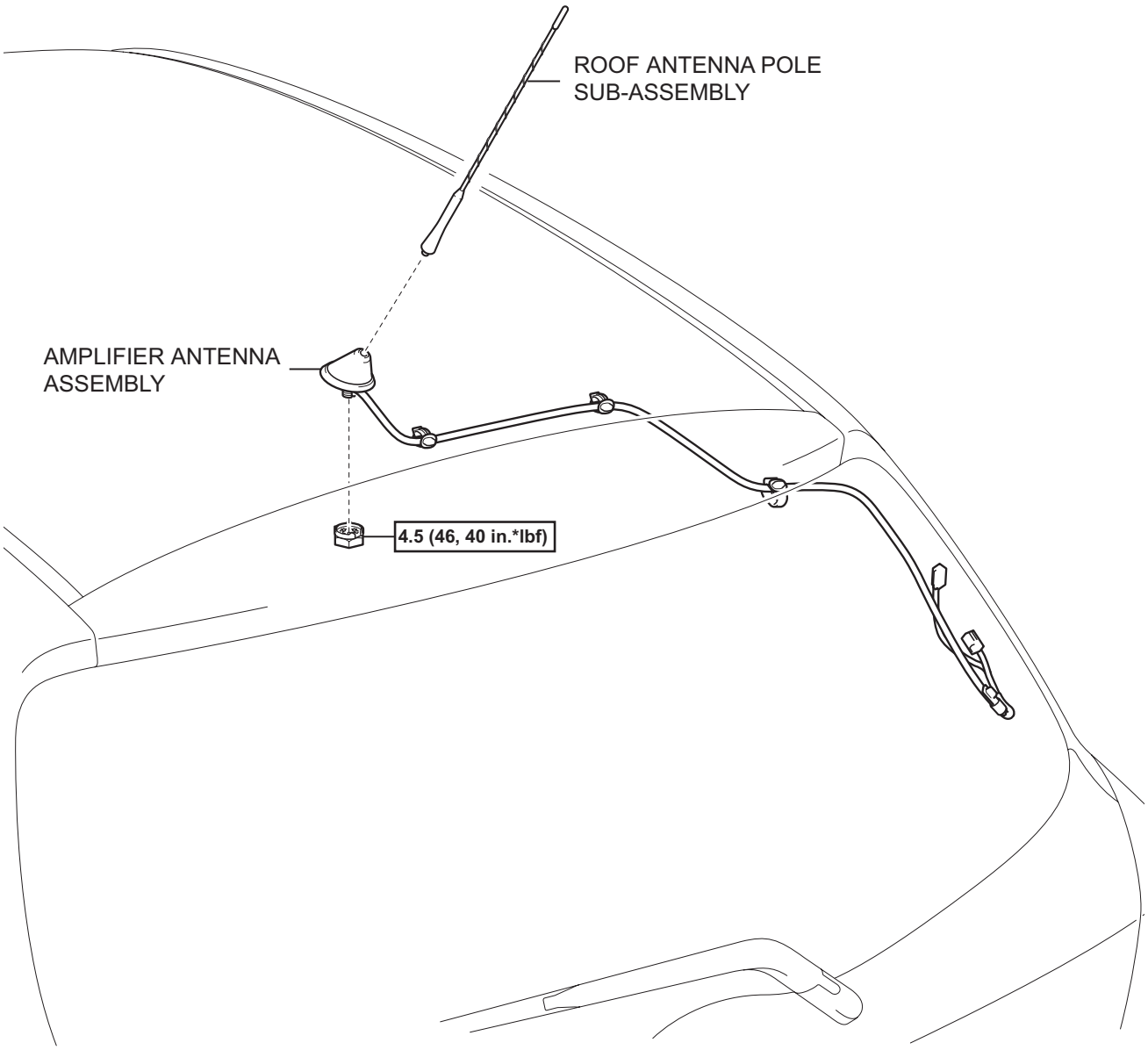

N*m (kgf*cm, ft.*lbf) : Specified torque

P

E107782E01

REMOVAL

CAUTION:
Some of these service operations affect the SRS airbag system. Read the precautionary notices concerning the SRS airbag system before servicing (See page RS-1).
NOTICE:
Always use "Torx" socket wrench E10 when removing the rear seat.

1. **DISCONNECT CABLE FROM NEGATIVE BATTERY TERMINAL**
2. **REMOVE PACKAGE TRAY TRIM PANEL ASSEMBLY (See page IR-48)**
3. **REMOVE DECK BOARD SUB-ASSEMBLY (See page IR-48)**
4. **REMOVE DECK FLOOR BOX RH (See page IR-48)**
5. **REMOVE DECK FLOOR BOX LH (See page IR-48)**
6. **REMOVE NO. 1 REAR SEAT LEG COVER (for 60/40 Split Seat Type)**
   (a) for RH Side:
      (1) Remove the No. 1 rear seat leg cover (See page SE-89).
   (b) for LH Side:
      (1) Remove the No. 1 rear seat leg cover (See page SE-70).
7. **REMOVE NO. 2 REAR SEAT LEG COVER (for 60/40 Split Seat Type) (See page SE-70)**
8. **REMOVE REAR SEAT ASSEMBLY RH (for 60/40 Split Seat Type) (See page SE-89)**
9. **REMOVE REAR SEAT ASSEMBLY LH (for 60/40 Split Seat Type) (See page SE-71)**
10. **REMOVE REAR SEAT CUSHION COVER PAD SUB-ASSEMBLY (for Hold Down Seat Type) (See page SE-114)**
11. **REMOVE REAR SEATBACK ASSEMBLY (for Hold Down Seat Type) (See page SE-115)**
12. **REMOVE REAR DECK TRIM COVER (See page IR-49)**
13. **REMOVE FRONT DOOR SCUFF PLATE RH (See page IR-49)**
14. **REMOVE FRONT DOOR SCUFF PLATE LH (See page IR-49)**
15. **REMOVE INSTRUMENT PANEL UNDER COVER SUB-ASSEMBLY RH (See page IR-50)**
16. **REMOVE INSTRUMENT PANEL UNDER COVER SUB-ASSEMBLY LH (See page IR-50)**
17. **REMOVE COWL SIDE TRIM BOARD RH (See page IR-50)**

18. **REMOVE COWL SIDE TRIM BOARD LH (See page IR-50)**
19. **REMOVE FRONT DOOR OPENING TRIM WEATHERSTRIP RH (See page IR-50)**
20. **REMOVE FRONT DOOR OPENING TRIM WEATHERSTRIP LH (See page IR-50)**
21. **REMOVE REAR DOOR SCUFF PLATE RH (See page IR-51)**
22. **REMOVE REAR DOOR SCUFF PLATE LH (See page IR-51)**
23. **REMOVE REAR DOOR OPENING TRIM WEATHERSTRIP RH (See page IR-51)**
24. **REMOVE REAR DOOR OPENING TRIM WEATHERSTRIP LH (See page IR-51)**
25. **REMOVE REAR SEAT OUTER BELT ASSEMBLY RH (See page IR-51)**
26. **REMOVE REAR SEAT OUTER BELT ASSEMBLY LH (See page IR-51)**
27. **REMOVE DECK TRIM SIDE PANEL ASSEMBLY RH (See page IR-52)**
28. **REMOVE DECK TRIM SIDE PANEL ASSEMBLY LH (See page IR-52)**
29. **REMOVE REAR CENTER SEAT OUTER BELT ASSEMBLY (See page IR-52)**
30. **REMOVE ROOF SIDE INNER GARNISH RH (See page IR-53)**
31. **REMOVE ROOF SIDE INNER GARNISH LH (See page IR-54)**
32. **REMOVE SEAT BELT ANCHOR COVER CAP (See page IR-54)**
33. **REMOVE FRONT SEAT OUTER BELT ASSEMBLY RH (See page IR-55)**
34. **REMOVE FRONT SEAT OUTER BELT ASSEMBLY LH (See page IR-55)**
35. **REMOVE CENTER PILLAR LOWER GARNISH RH (See page IR-55)**
36. **REMOVE CENTER PILLAR LOWER GARNISH LH (See page IR-55)**
37. **REMOVE CENTER PILLAR UPPER GARNISH RH (See page IR-55)**
38. **REMOVE CENTER PILLAR UPPER GARNISH LH (See page IR-55)**
39. **REMOVE SEAT BELT ANCHOR COVER (See page SB-159)**

40. REMOVE ROOF HEADLINING SERVICE HOLE COVER (w/o Curtain Shield Airbag) (See page IR-55)

41. REMOVE ASSIST GRIP COVER (See page IR-55)

42. REMOVE ASSIST GRIP SUB-ASSEMBLY (See page IR-56)

43. REMOVE VISOR ASSEMBLY RH (See page IR-56)

44. REMOVE VISOR ASSEMBLY LH (See page IR-56)

45. REMOVE VISOR HOLDER RH (See page IR-56)

46. REMOVE VISOR HOLDER LH (See page IR-56)

47. REMOVE ROOM LIGHT ASSEMBLY (See page IR-57)

48. REMOVE MAP LIGHT ASSEMBLY (See page IR-58)

49. REMOVE FRONT PILLAR GARNISH RH (See page IR-58)

50. REMOVE FRONT PILLAR GARNISH LH (See page IR-59)

51. REMOVE ROOF HEADLINING ASSEMBLY (See page AV-83)

52. REMOVE ROOF ANTENNA POLE SUB-ASSEMBLY (See page AV-117)

53. REMOVE AMPLIFIER ANTENNA ASSEMBLY

(a) Disengage the 5 clamps.

(b) Remove the antenna nut.

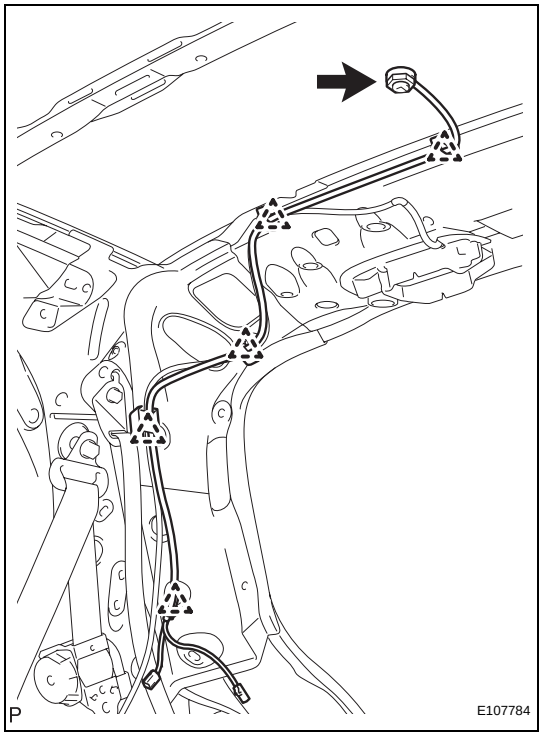

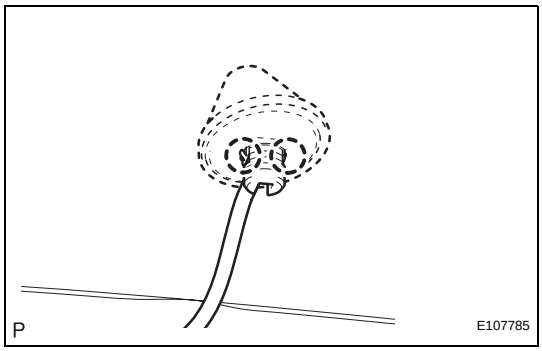

(c) Disengage the 2 claws and remove the amplifier antenna.

INSTALLATION

CAUTION:
Some of these service operations affect the SRS airbag system. Read the precautionary notices concerning the SRS airbag system before servicing (See page RS-1).
NOTICE:
Always use "Torx" socket wrench E10 when installing the rear seat.

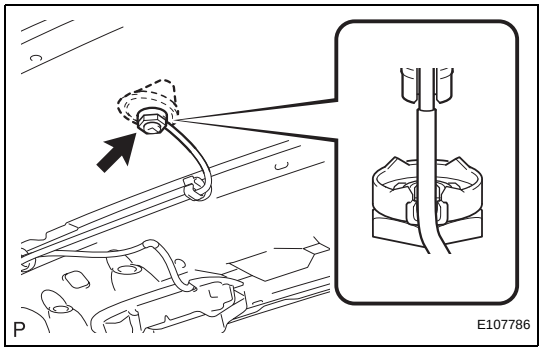

1. **INSTALL AMPLIFIER ANTENNA ASSEMBLY**
   (a) Set the amplifier antenna into the hole in the roof, and place the amplifier antenna cord in the cutout of the amplifier antenna.
   (b) Install the amplifier antenna with the antenna nut.
   Torque: 4.5 N*m (46 kgf*cm, 40 in.*lbf)

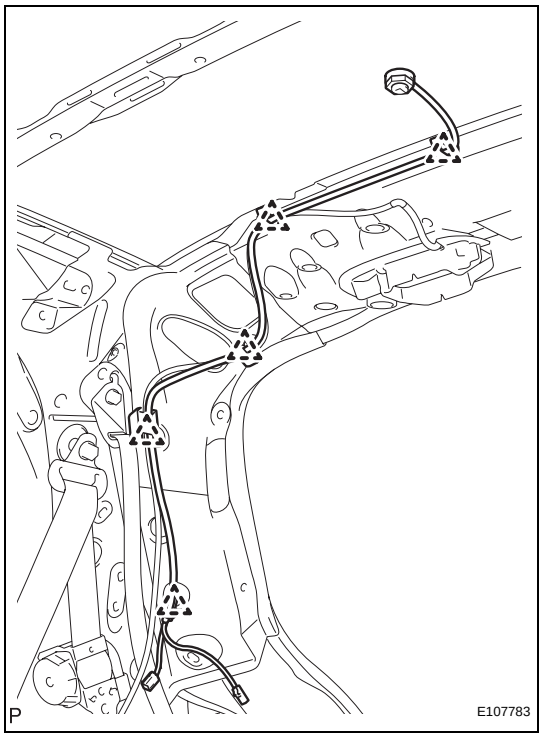

   (c) Engage the 5 clamps.

2. **INSTALL ROOF ANTENNA POLE SUB-ASSEMBLY (See page AV-117)**
3. **INSTALL ROOF HEADLINING ASSEMBLY (See page AV-87)**
4. **INSTALL FRONT PILLAR GARNISH RH (See page IR-71)**
5. **INSTALL FRONT PILLAR GARNISH LH (See page IR-72)**
6. **INSTALL MAP LIGHT ASSEMBLY (See page IR-73)**
7. **INSTALL ROOM LIGHT ASSEMBLY (See page IR-74)**
8. **INSTALL VISOR HOLDER RH (See page IR-75)**
9. **INSTALL VISOR HOLDER LH (See page IR-75)**
10. **INSTALL VISOR ASSEMBLY RH (See page IR-75)**
11. **INSTALL VISOR ASSEMBLY LH (See page IR-75)**
12. **INSTALL ROOF HEADLINING SERVICE HOLE COVER (w/o Curtain Shield Airbag) (See page IR-76)**
13. **INSTALL ASSIST GRIP SUB-ASSEMBLY (See page IR-75)**
14. **INSTALL ASSIST GRIP COVER (See page IR-75)**
15. **INSTALL SEAT BELT ANCHOR COVER (See page SB-160)**
16. **INSTALL CENTER PILLAR UPPER GARNISH RH (See page IR-76)**
17. **INSTALL CENTER PILLAR UPPER GARNISH LH (See page IR-76)**

18. **INSTALL CENTER PILLAR LOWER GARNISH RH (See page IR-76)**
19. **INSTALL CENTER PILLAR LOWER GARNISH LH (See page IR-76)**
20. **INSTALL FRONT SEAT OUTER BELT ASSEMBLY RH (See page IR-76)**
21. **INSTALL FRONT SEAT OUTER BELT ASSEMBLY LH (See page IR-76)**
22. **INSTALL SEAT BELT ANCHOR COVER CAP (See page IR-76)**
23. **INSTALL ROOF SIDE INNER GARNISH RH (See page IR-77)**
24. **INSTALL ROOF SIDE INNER GARNISH LH (See page IR-77)**
25. **INSTALL REAR CENTER SEAT OUTER BELT ASSEMBLY (See page IR-78)**
26. **INSTALL DECK TRIM SIDE PANEL ASSEMBLY RH (See page IR-79)**
27. **INSTALL DECK TRIM SIDE PANEL ASSEMBLY LH (See page IR-79)**
28. **INSTALL REAR SEAT OUTER BELT ASSEMBLY RH (See page IR-79)**
29. **INSTALL REAR SEAT OUTER BELT ASSEMBLY LH (See page IR-80)**
30. **INSTALL REAR DOOR OPENING TRIM WEATHERSTRIP RH (See page IR-80)**
31. **INSTALL REAR DOOR OPENING TRIM WEATHERSTRIP LH (See page IR-80)**
32. **INSTALL REAR DOOR SCUFF PLATE RH (See page IR-80)**
33. **INSTALL REAR DOOR SCUFF PLATE LH (See page IR-80)**
34. **INSTALL FRONT DOOR OPENING TRIM WEATHERSTRIP RH (See page IR-81)**
35. **INSTALL FRONT DOOR OPENING TRIM WEATHERSTRIP LH (See page IR-81)**
36. **INSTALL COWL SIDE TRIM BOARD RH (See page IR-81)**
37. **INSTALL COWL SIDE TRIM BOARD LH (See page IR-81)**
38. **INSTALL INSTRUMENT PANEL UNDER COVER SUB-ASSEMBLY RH (See page IR-81)**
39. **INSTALL INSTRUMENT PANEL UNDER COVER SUB-ASSEMBLY LH (See page IR-82)**

40. INSTALL FRONT DOOR SCUFF PLATE RH (See page IR-82)

41. INSTALL FRONT DOOR SCUFF PLATE LH (See page IR-82)

42. INSTALL REAR DECK TRIM COVER (See page IR-82)

43. INSTALL REAR SEAT ASSEMBLY RH (for 60/40 Split Seat Type) (See page SE-102)

44. INSTALL REAR SEAT ASSEMBLY LH (for 60/40 Split Seat Type) (See page SE-84)

45. INSTALL NO. 2 REAR SEAT LEG COVER (for 60/40 Split Seat Type) (See page SE-85)

46. INSTALL NO. 1 REAR SEAT LEG COVER (for 60/40 Split Seat Type)

(a) for RH Side:

(1) Remove the No. 1 rear seat leg cover (See page SE-103).

(b) for LH Side:

(1) Remove the No. 1 rear seat leg cover (See page SE-85).

47. INSTALL REAR SEATBACK ASSEMBLY (for Hold Down Seat Type) (See page SE-122)

48. INSTALL REAR SEAT CUSHION COVER PAD SUB-ASSEMBLY (for Hold Down Seat Type) (See page SE-123)

49. INSTALL DECK FLOOR BOX RH (See page IR-83)

50. INSTALL DECK FLOOR BOX LH (See page IR-83)

51. INSTALL DECK BOARD SUB-ASSEMBLY (See page IR-83)

52. INSTALL PACKAGE TRAY TRIM PANEL ASSEMBLY (See page IR-83)

53. CONNECT CABLE TO NEGATIVE BATTERY TERMINAL
Torque: 5.4 N*m (55 kgf*cm, 48 in.*lbf)

AMPLIFIER ANTENNA (for Hatchback 3 Door)

COMPONENTS

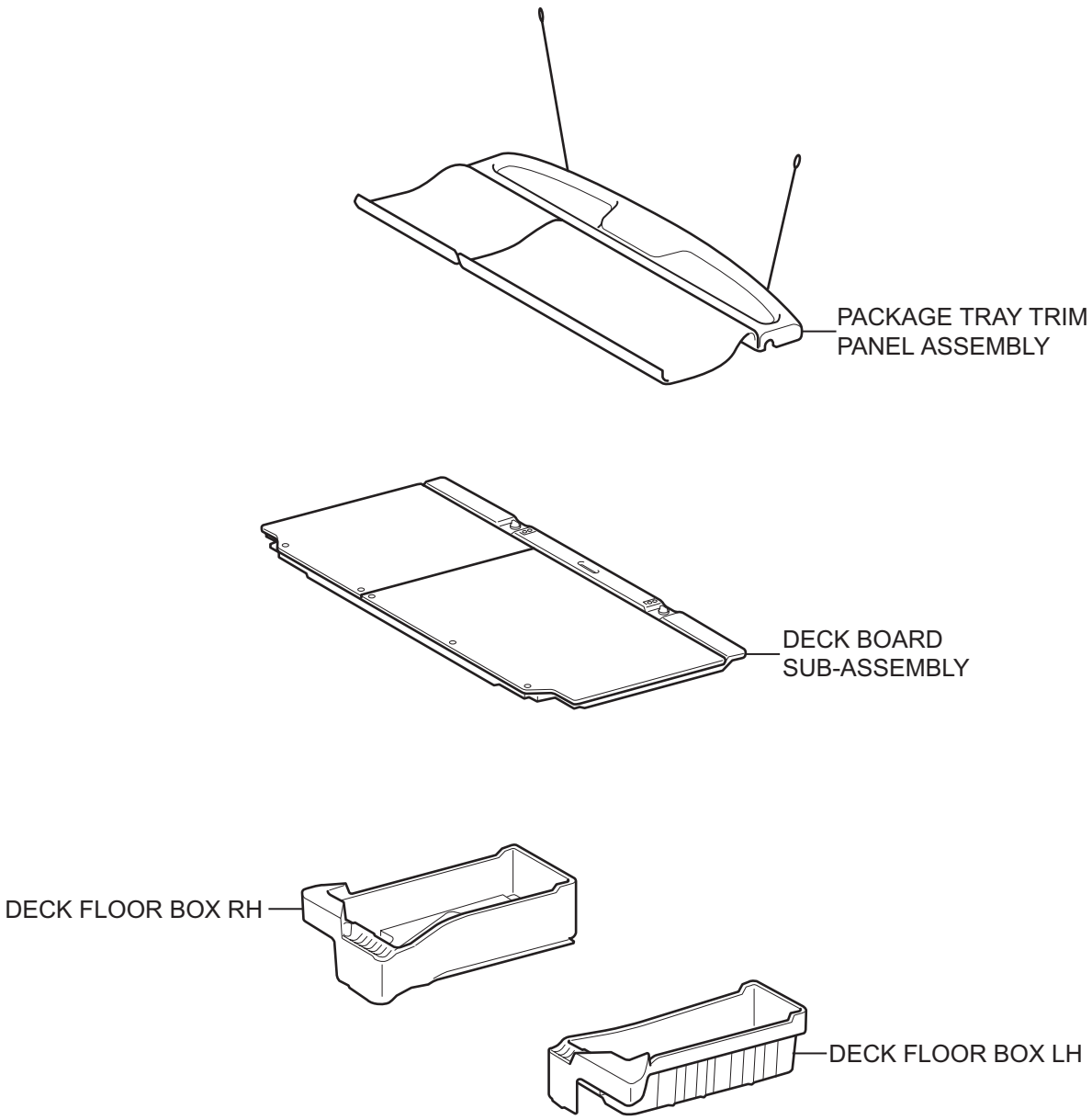

T

B114273E01

for 60/40 Split Seat Type:

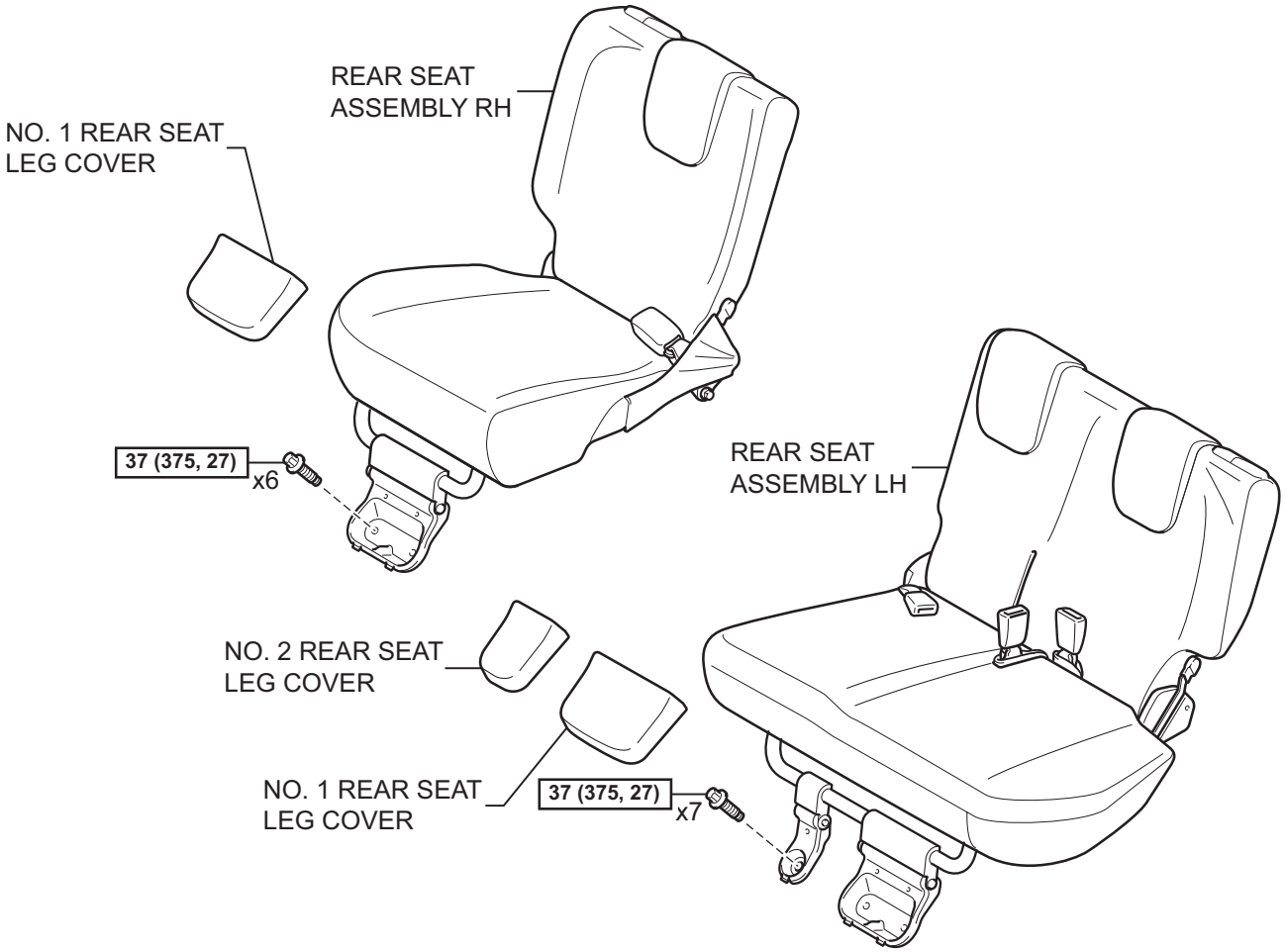

for Hold Down Seat Type:

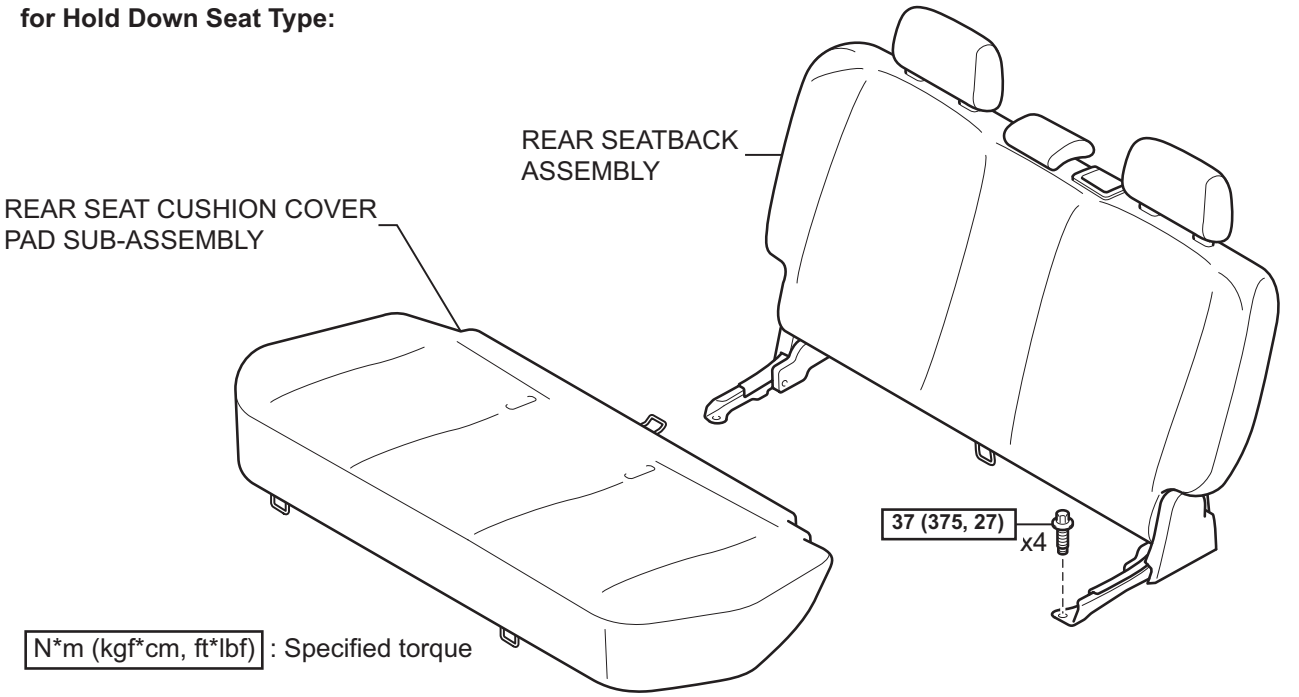

T

B121713E03

AV

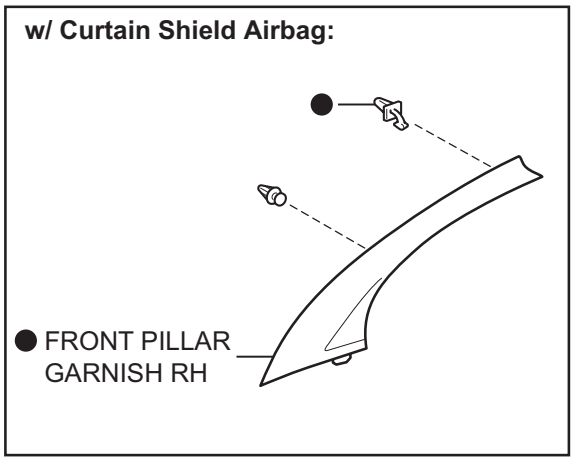

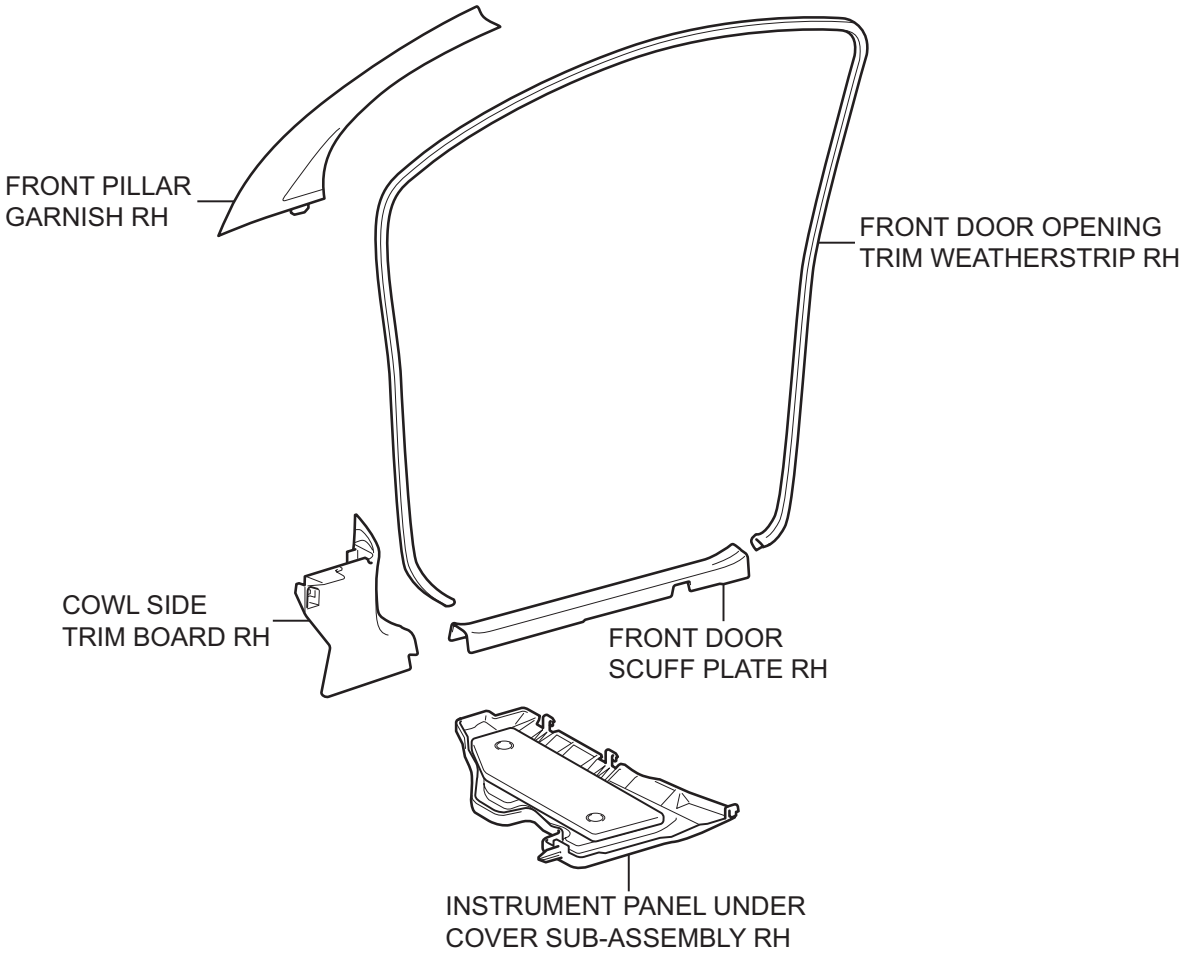

● Non-reusable part

T

B114488E02

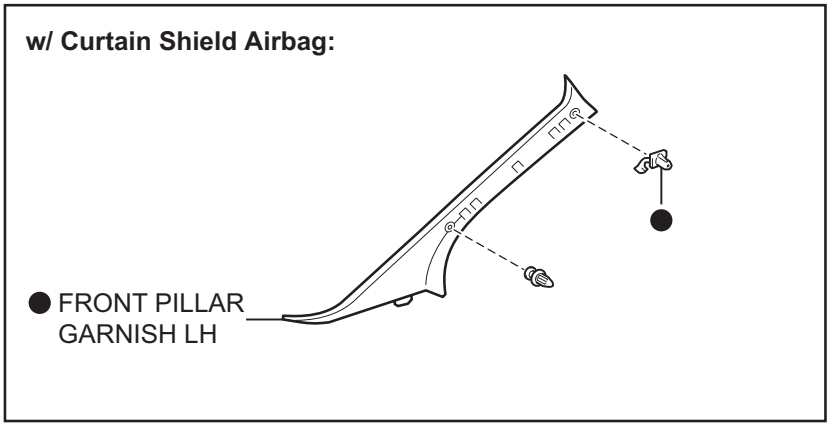

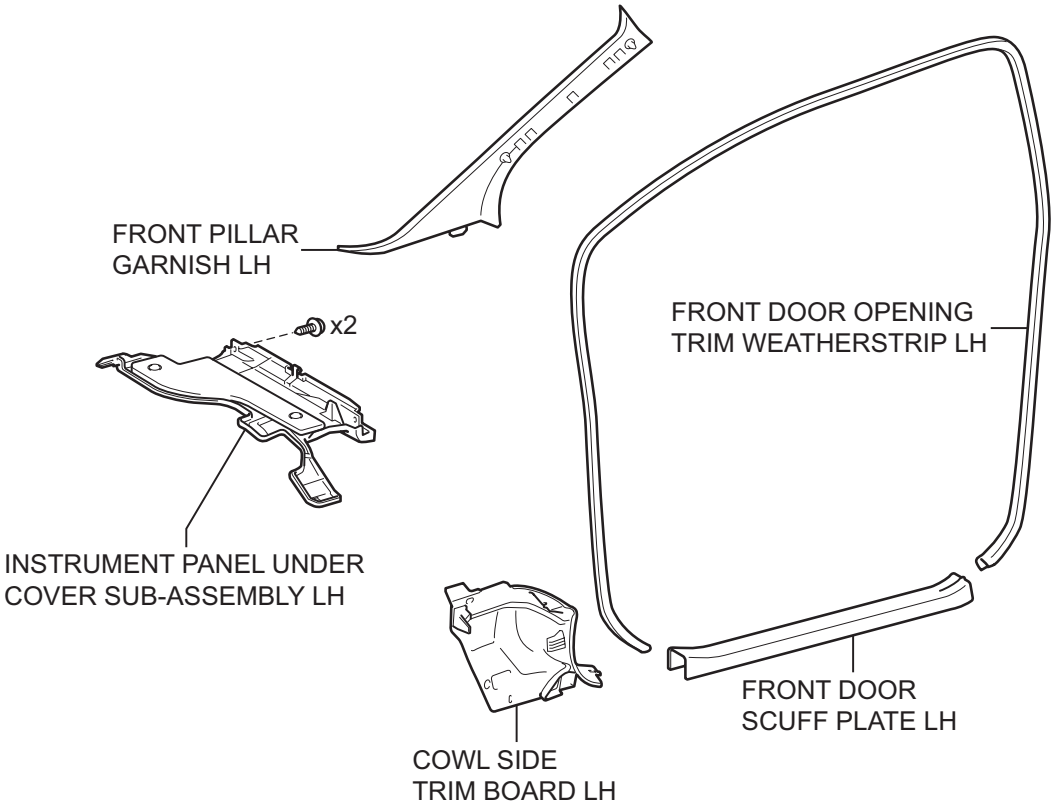

● Non-reusable part

T

B114489E02

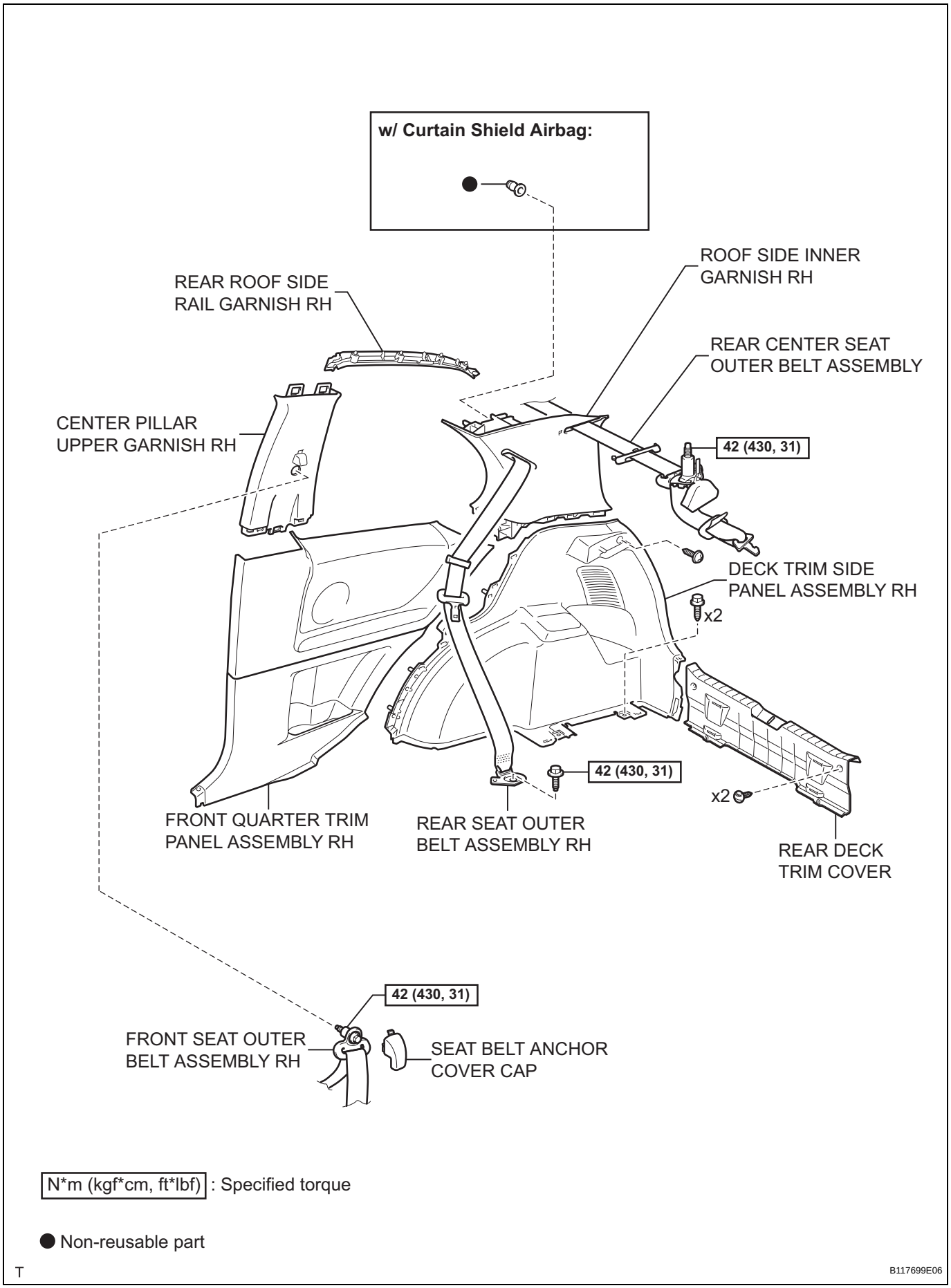

N*m (kgf*cm, ft*lbf) : Specified torque

● Non-reusable part

T

B117699E06

AV

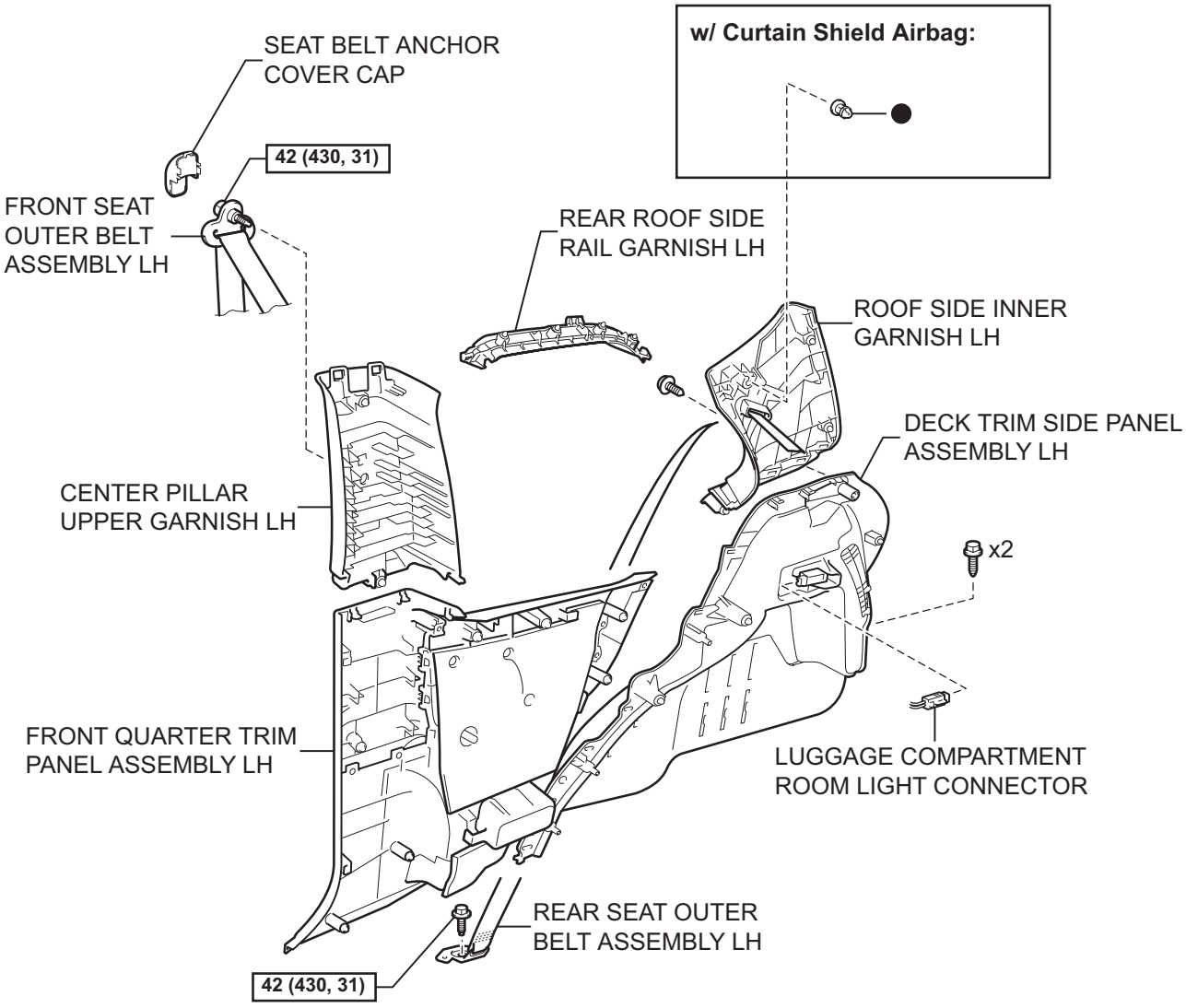

N*m (kgf*cm, ft*lbf) : Specified torque

● Non-reusable part

T

B117700E07

AV

w/ Curtain Shield Airbag:

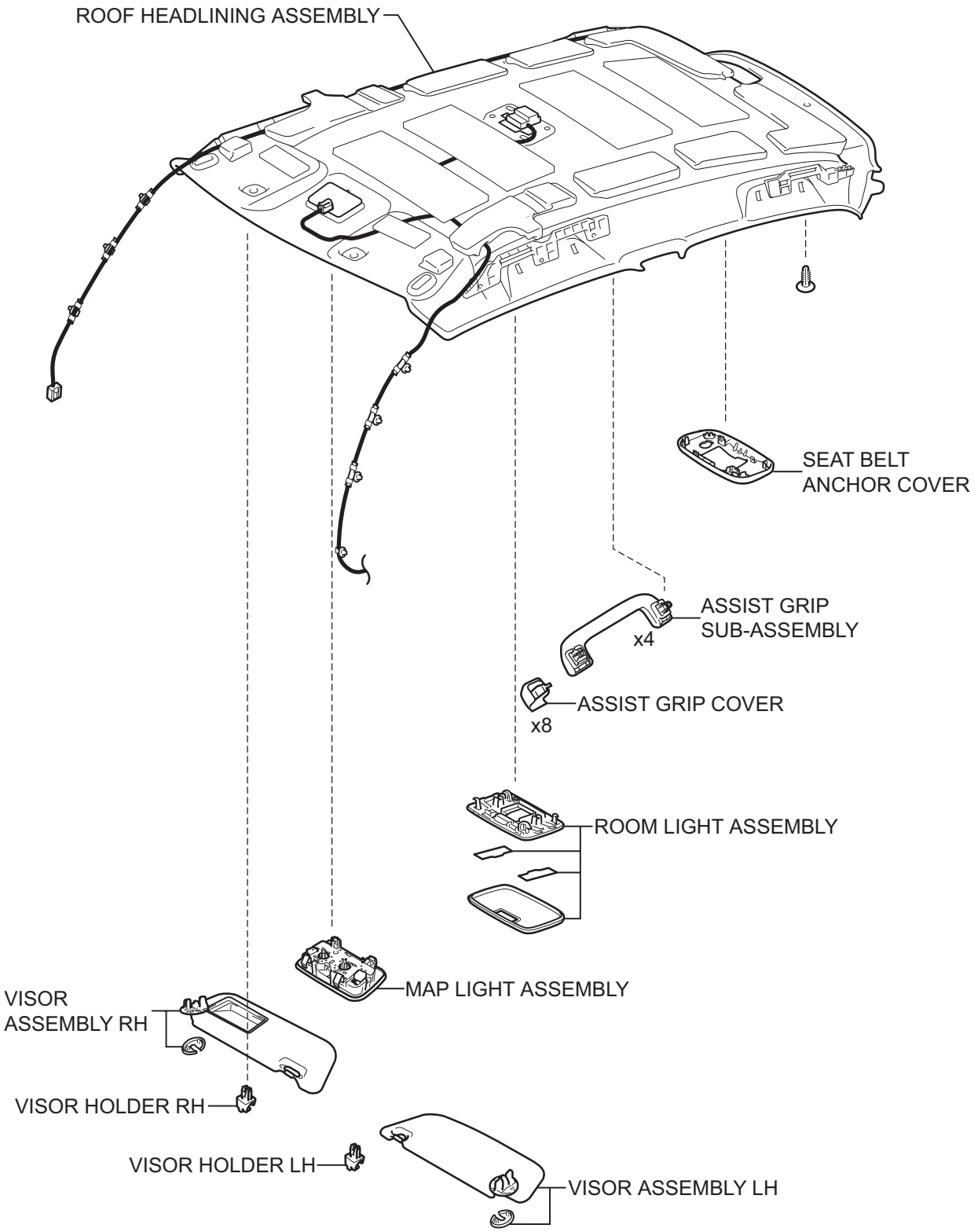

T

B138692E01

w/o Curtain Shield Airbag:

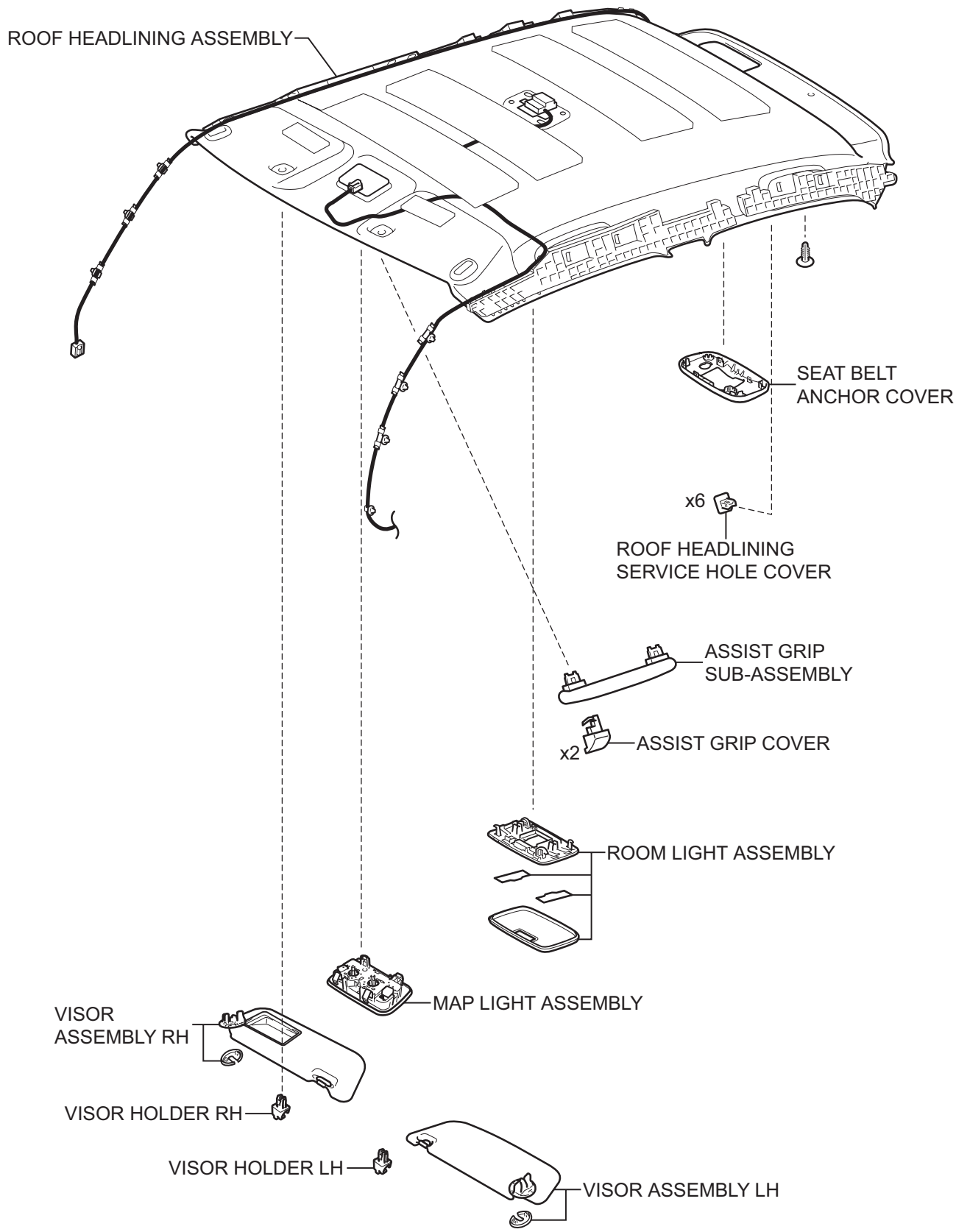

T

B138693E01

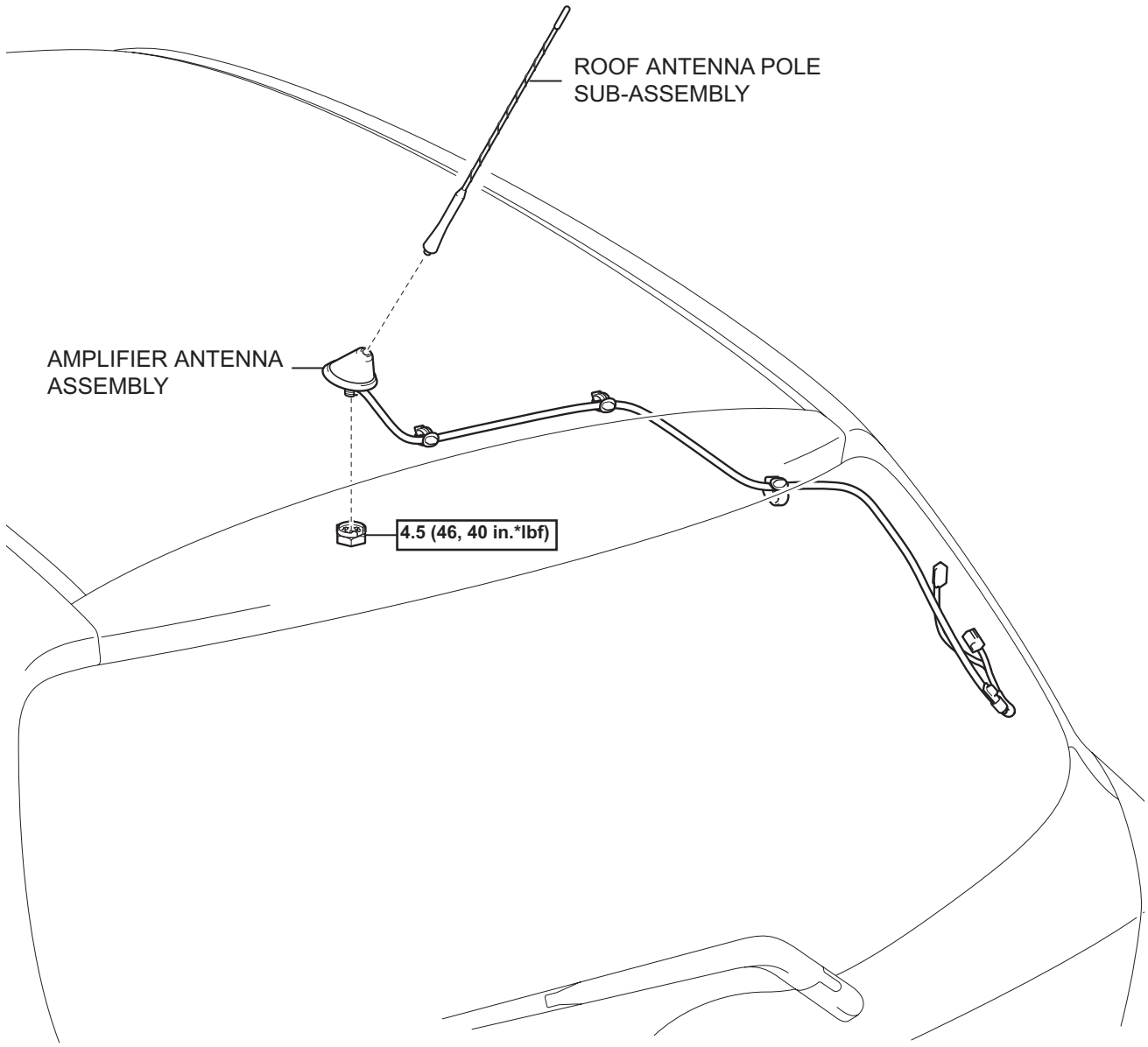

N*m (kgf*cm, ft.*lbf) : Specified torque

P

E107782E02

REMOVAL

CAUTION:
Some of these service operations affect the SRS airbag system. Read the precautionary notices concerning the SRS airbag system before servicing (See page RS-1).
NOTICE:
Always use "Torx" socket wrench E10 when removing the rear seat.

1. **DISCONNECT CABLE FROM NEGATIVE BATTERY TERMINAL**
2. **REMOVE PACKAGE TRAY TRIM PANEL ASSEMBLY (See page IR-48)**
3. **REMOVE DECK BOARD SUB-ASSEMBLY (See page IR-48)**
4. **REMOVE DECK FLOOR BOX RH (See page IR-48)**
5. **REMOVE DECK FLOOR BOX LH (See page IR-48)**
6. **REMOVE NO. 1 REAR SEAT LEG COVER (for 60/40 Split Seat Type)**
   (a) for RH Side:
      (1) Remove the No. 1 rear seat leg cover (See page SE-89).
   (b) for LH Side:
      (1) Remove the No. 1 rear seat leg cover (See page SE-70).
7. **REMOVE NO. 2 REAR SEAT LEG COVER (for 60/40 Split Seat Type) (See page SE-70)**
8. **REMOVE REAR SEAT ASSEMBLY RH (for 60/40 Split Seat Type) (See page SE-89)**
9. **REMOVE REAR SEAT ASSEMBLY LH (for 60/40 Split Seat Type) (See page SE-71)**
10. **REMOVE REAR SEAT CUSHION COVER PAD SUB-ASSEMBLY (for Hold Down Seat Type) (See page SE-114)**
11. **REMOVE REAR SEATBACK ASSEMBLY (for Hold Down Seat Type) (See page SE-115)**
12. **REMOVE FRONT DOOR SCUFF PLATE RH (See page IR-97)**
13. **REMOVE FRONT DOOR SCUFF PLATE LH (See page IR-97)**
14. **REMOVE INSTRUMENT PANEL UNDER COVER SUB-ASSEMBLY RH (See page IR-50)**
15. **REMOVE INSTRUMENT PANEL UNDER COVER SUB-ASSEMBLY LH (See page IR-50)**
16. **REMOVE COWL SIDE TRIM BOARD RH (See page IR-50)**

17. **REMOVE COWL SIDE TRIM BOARD LH (See page IR-50)**
18. **REMOVE FRONT DOOR OPENING TRIM WEATHERSTRIP RH (See page IR-97)**
19. **REMOVE FRONT DOOR OPENING TRIM WEATHERSTRIP LH (See page IR-97)**
20. **REMOVE FRONT QUARTER TRIM PANEL ASSEMBLY RH (See page IR-97)**
21. **REMOVE FRONT QUARTER TRIM PANEL ASSEMBLY LH (See page IR-97)**
22. **REMOVE REAR DECK TRIM COVER (See page IR-49)**
23. **REMOVE REAR SEAT OUTER BELT ASSEMBLY RH (See page IR-98)**
24. **REMOVE REAR SEAT OUTER BELT ASSEMBLY LH (See page IR-98)**
25. **REMOVE DECK TRIM SIDE PANEL ASSEMBLY RH (See page IR-98)**
26. **REMOVE DECK TRIM SIDE PANEL ASSEMBLY LH (See page IR-98)**
27. **REMOVE SEAT BELT ANCHOR COVER CAP (See page IR-99)**
28. **REMOVE FRONT SEAT OUTER BELT ASSEMBLY RH (See page IR-99)**
29. **REMOVE FRONT SEAT OUTER BELT ASSEMBLY LH (See page IR-99)**
30. **REMOVE CENTER PILLAR UPPER GARNISH RH (See page IR-99)**
31. **REMOVE CENTER PILLAR UPPER GARNISH LH (See page IR-99)**
32. **REMOVE REAR CENTER SEAT OUTER BELT ASSEMBLY (See page IR-52)**
33. **REMOVE ROOF SIDE INNER GARNISH RH (See page IR-99)**
34. **REMOVE ROOF SIDE INNER GARNISH LH (See page IR-100)**
35. **REMOVE REAR ROOF SIDE RAIL GARNISH RH (See page IR-100)**
36. **REMOVE REAR ROOF SIDE RAIL GARNISH LH (See page IR-100)**
37. **REMOVE SEAT BELT ANCHOR COVER (See page SB-159)**
38. **REMOVE ROOF HEADLINING SERVICE HOLE COVER (w/o Curtain Shield Airbag) (See page IR-55)**
39. **REMOVE ASSIST GRIP COVER (See page IR-55)**

40. **REMOVE ASSIST GRIP SUB-ASSEMBLY (See page IR-56)**
41. **REMOVE VISOR ASSEMBLY RH (See page IR-56)**
42. **REMOVE VISOR ASSEMBLY LH (See page IR-56)**
43. **REMOVE VISOR HOLDER RH (See page IR-56)**
44. **REMOVE VISOR HOLDER LH (See page IR-56)**
45. **REMOVE ROOM LIGHT ASSEMBLY (See page IR-57)**
46. **REMOVE MAP LIGHT ASSEMBLY (See page IR-58)**
47. **REMOVE FRONT PILLAR GARNISH RH (See page IR-58)**
48. **REMOVE FRONT PILLAR GARNISH LH (See page IR-59)**
49. **REMOVE ROOF HEADLINING ASSEMBLY (See page AV-107)**
50. **REMOVE ROOF ANTENNA POLE SUB-ASSEMBLY (See page AV-117)**
51. **REMOVE AMPLIFIER ANTENNA ASSEMBLY (See page AV-135)**

INSTALLATION

CAUTION:
Some of these service operations affect the SRS airbag system. Read the precautionary notices concerning the SRS airbag system before servicing (See page RS-1).
NOTICE:
Always use "Torx" socket wrench E10 when installing the rear seat.

1. **INSTALL AMPLIFIER ANTENNA ASSEMBLY (See page AV-136)**
2. **INSTALL ROOF ANTENNA POLE SUB-ASSEMBLY (See page AV-117)**
3. **INSTALL ROOF HEADLINING ASSEMBLY (See page AV-112)**
4. **INSTALL FRONT PILLAR GARNISH RH (See page IR-71)**
5. **INSTALL FRONT PILLAR GARNISH LH (See page IR-72)**
6. **INSTALL MAP LIGHT ASSEMBLY (See page IR-73)**
7. **INSTALL ROOM LIGHT ASSEMBLY (See page IR-74)**
8. **INSTALL VISOR HOLDER RH (See page IR-75)**
9. **INSTALL VISOR HOLDER LH (See page IR-75)**
10. **INSTALL VISOR ASSEMBLY RH (See page IR-75)**
11. **INSTALL VISOR ASSEMBLY LH (See page IR-75)**
12. **INSTALL ASSIST GRIP SUB-ASSEMBLY (See page IR-75)**
13. **INSTALL ASSIST GRIP COVER (See page IR-75)**
14. **INSTALL ROOF HEADLINING SERVICE HOLE COVER (w/o Curtain Shield Airbag) (See page IR-76)**
15. **INSTALL SEAT BELT ANCHOR COVER (See page SB-160)**
16. **INSTALL REAR ROOF SIDE RAIL GARNISH RH (See page IR-115)**
17. **INSTALL REAR ROOF SIDE RAIL GARNISH LH (See page IR-115)**
18. **INSTALL ROOF SIDE INNER GARNISH RH (See page IR-115)**
19. **INSTALL ROOF SIDE INNER GARNISH LH (See page IR-116)**
20. **INSTALL REAR CENTER SEAT OUTER BELT ASSEMBLY (See page IR-78)**
21. **INSTALL CENTER PILLAR UPPER GARNISH RH (See page IR-116)**

22. **INSTALL CENTER PILLAR UPPER GARNISH LH (See page IR-116)**
23. **INSTALL FRONT SEAT OUTER BELT ASSEMBLY RH (See page IR-117)**
24. **INSTALL FRONT SEAT OUTER BELT ASSEMBLY LH (See page IR-117)**
25. **INSTALL SEAT BELT ANCHOR COVER CAP (See page IR-117)**
26. **INSTALL DECK TRIM SIDE PANEL ASSEMBLY RH (See page IR-117)**
27. **INSTALL DECK TRIM SIDE PANEL ASSEMBLY LH (See page IR-118)**
28. **INSTALL REAR SEAT OUTER BELT ASSEMBLY RH (See page IR-118)**
29. **INSTALL REAR SEAT OUTER BELT ASSEMBLY LH (See page IR-118)**
30. **INSTALL REAR DECK TRIM COVER (See page IR-82)**
31. **INSTALL FRONT QUARTER TRIM PANEL ASSEMBLY RH (See page IR-118)**
32. **INSTALL FRONT QUARTER TRIM PANEL ASSEMBLY LH (See page IR-119)**
33. **INSTALL FRONT DOOR OPENING TRIM WEATHERSTRIP RH (See page IR-119)**
34. **INSTALL FRONT DOOR OPENING TRIM WEATHERSTRIP LH (See page IR-119)**
35. **INSTALL COWL SIDE TRIM BOARD RH (See page IR-81)**
36. **INSTALL COWL SIDE TRIM BOARD LH (See page IR-81)**
37. **INSTALL INSTRUMENT PANEL UNDER COVER SUB-ASSEMBLY RH (See page IR-81)**
38. **INSTALL INSTRUMENT PANEL UNDER COVER SUB-ASSEMBLY LH (See page IR-82)**
39. **INSTALL FRONT DOOR SCUFF PLATE RH (See page IR-119)**
40. **INSTALL FRONT DOOR SCUFF PLATE LH (See page IR-119)**
41. **INSTALL REAR SEAT ASSEMBLY RH (for 60/40 Slide Reclining Hold Down Seat Type) (See page SE-102)**
42. **INSTALL REAR SEAT ASSEMBLY LH (for 60/40 Split Seat Type) (See page SE-84)**
43. **INSTALL NO. 2 REAR SEAT LEG COVER (for 60/40 Split Seat Type) (See page SE-85)**

44. INSTALL NO. 1 REAR SEAT LEG COVER (for 60/40 Split Seat Type)

(a) for RH Side:

(1) Install the No. 1 rear seat leg cover (See page SE-103).

(b) for LH Side:

(1) Install the No. 1 rear seat leg cover (See page SE-85).

45. INSTALL REAR SEATBACK ASSEMBLY (for Hold Down Seat Type) (See page SE-123)

46. INSTALL REAR SEAT CUSHION COVER PAD SUB-ASSEMBLY (for Hold Down Seat Type) (See page SE-122)

47. INSTALL DECK FLOOR BOX RH (See page IR-83)

48. INSTALL DECK FLOOR BOX LH (See page IR-83)

49. INSTALL DECK BOARD SUB-ASSEMBLY (See page IR-83)

50. INSTALL PACKAGE TRAY TRIM PANEL ASSEMBLY (See page IR-83)

51. CONNECT CABLE TO NEGATIVE BATTERY TERMINAL
Torque: 5.4 N*m (55 kgf*cm, 48 in.*lbf)

STEREO JACK ADAPTER ASSEMBLY (for Sedan)

COMPONENTS

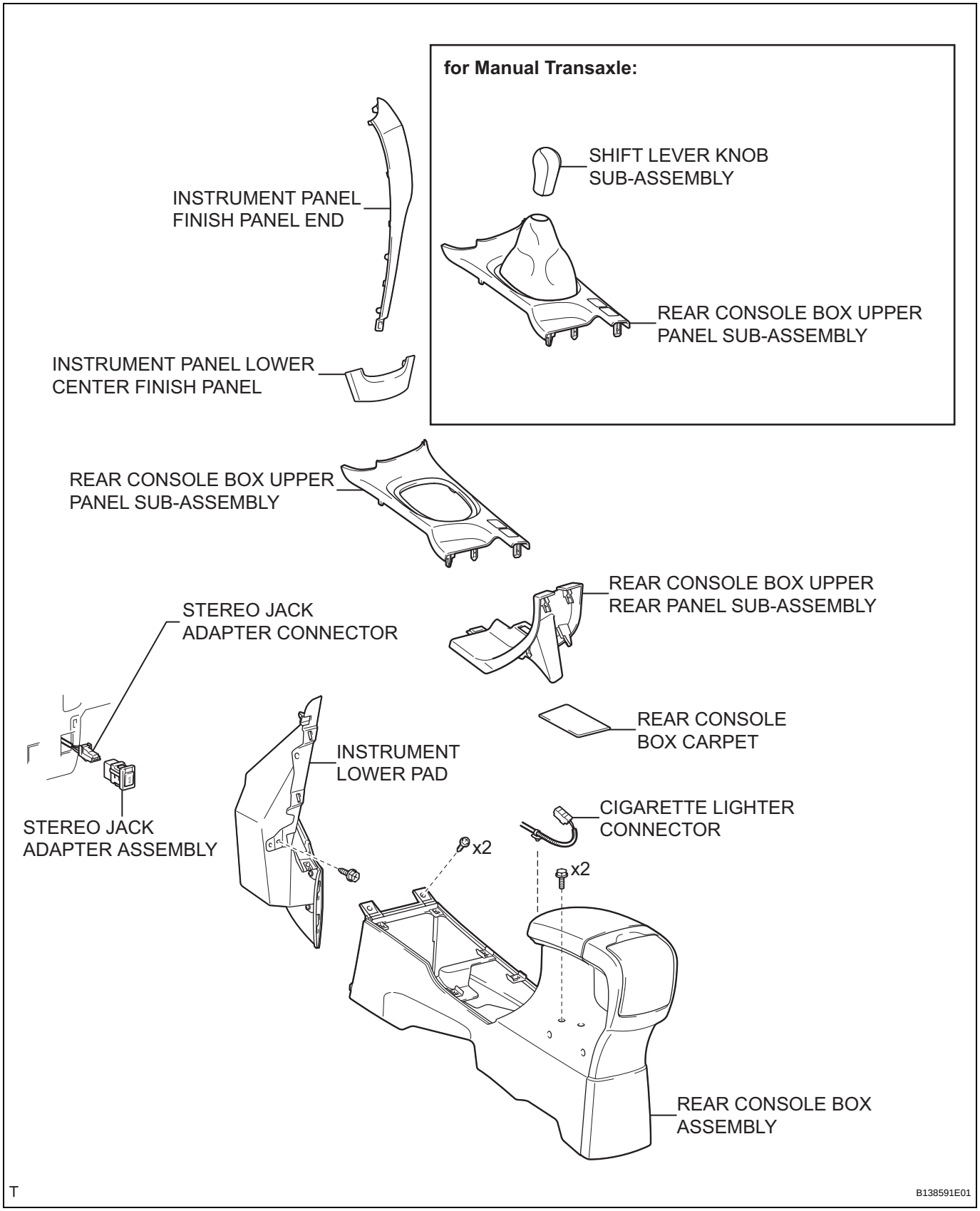

AV

REMOVAL

1. **DISCONNECT CABLE FROM NEGATIVE BATTERY TERMINAL**
2. **REMOVE INSTRUMENT PANEL LOWER CENTER FINISH PANEL (See page ME-138)**
3. **REMOVE SHIFT LEVER KNOB SUB-ASSEMBLY (for Manual Transaxle) (See page IP-84)**
4. **REMOVE REAR CONSOLE BOX UPPER PANEL SUB-ASSEMBLY (See page IP-84)**
5. **REMOVE REAR CONSOLE BOX UPPER REAR PANEL SUB-ASSEMBLY (See page IP-84)**
6. **REMOVE REAR CONSOLE BOX CARPET (See page IP-85)**
7. **REMOVE REAR CONSOLE BOX ASSEMBLY (See page IP-85)**
8. **REMOVE INSTRUMENT PANEL FINISH PANEL END (See page ME-138)**
9. **REMOVE INSTRUMENT LOWER PAD (See page IP-45)**
10. **REMOVE STEREO JACK ADAPTER ASSEMBLY**
    (a) Disengage the 2 claws and remove the stereo jack adapter.
    (b) Disconnect the stereo jack adapter connector.

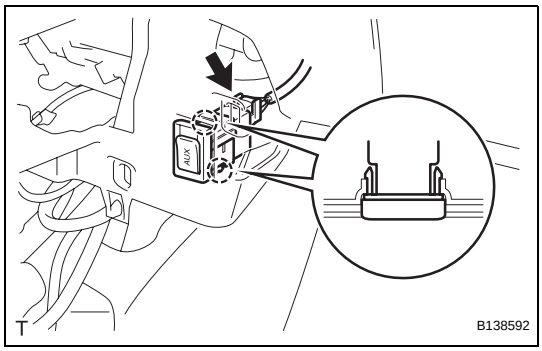

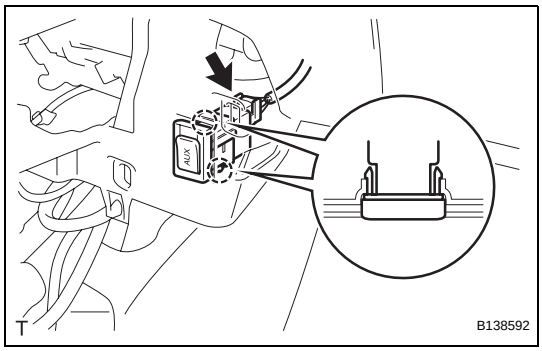

INSTALLATION

1. **INSTALL STEREO JACK ADAPTER ASSEMBLY**
    (a) Connect the stereo jack adapter connector.
    (b) Engage the 2 claws and install the stereo jack adapter.
2. **INSTALL INSTRUMENT LOWER PAD (See page IP-54)**
3. **INSTALL INSTRUMENT PANEL FINISH PANEL END (See page ME-141)**
4. **INSTALL REAR CONSOLE BOX ASSEMBLY (See page IP-88)**
5. **INSTALL REAR CONSOLE BOX CARPET (See page IP-88)**
6. **INSTALL REAR CONSOLE BOX UPPER REAR PANEL SUB-ASSEMBLY (See page IP-89)**
7. **INSTALL REAR CONSOLE BOX UPPER PANEL SUB-ASSEMBLY (See page IP-89)**

8. **INSTALL SHIFT LEVER KNOB SUB-ASSEMBLY (See page IP-89)**
9. **INSTALL INSTRUMENT PANEL LOWER CENTER FINISH PANEL (See page ME-142)**
10. **CONNECT CABLE TO NEGATIVE BATTERY TERMINAL**
    Torque: 5.4 N*m (55 kgf*cm, 48 in.*lbf)

WINDOW GLASS ANTENNA WIRE (for Sedan)

REPAIR

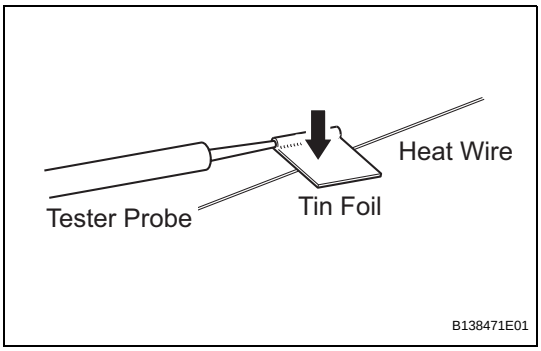

1. INSPECT WINDOW GLASS ANTENNA WIRE

NOTICE:

When cleaning the glass, use a soft, dry cloth, and wipe the glass in the direction of the wire. Do not to damage the wires. Do not use detergents or glass cleaners which contain any abrasive ingredients. When measuring the voltage, wind a piece of tin foil around the top of the negative probe and press the foil against wire by your finger, as shown in the illustration.

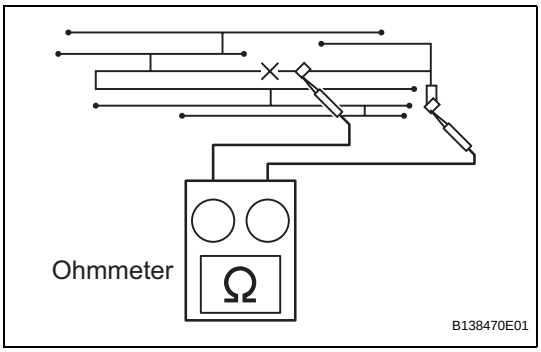

(a) Inspect the continuity, at the center of each antenna wire, as shown in the illustration.

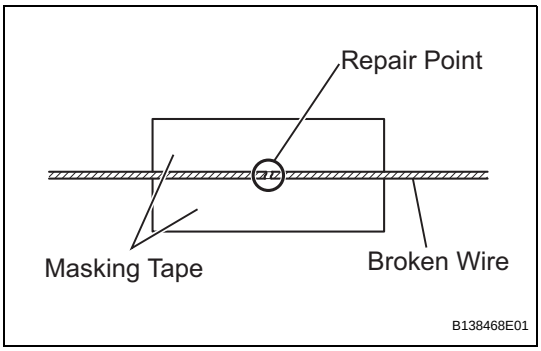

2. REPAIR WINDOW GLASS ANTENNA WIRE

(a) Clean the broken wire tips with grease, wax or silicone remover.

(b) Place the masking tape along both sides of the wire to be repaired.

(c) Thoroughly mix the repair agent (Dupont paste No. 4817).

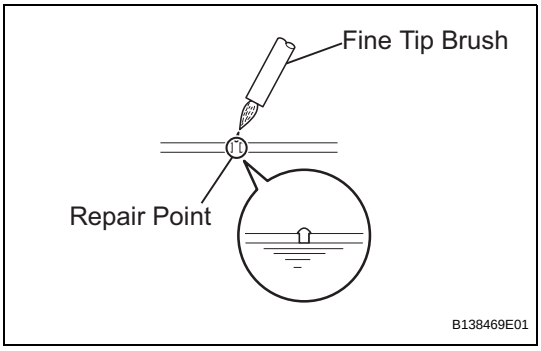

(d) Using a fine tip brush, apply a small amount of the agent to the wire.

(e) After a few minutes, remove the masking tape.

(f) Do not repair the defogger wire after for at least 24 hours after the removal of the masking tape.

FRONT NO. 1 SPEAKER (for Sedan)

COMPONENTS

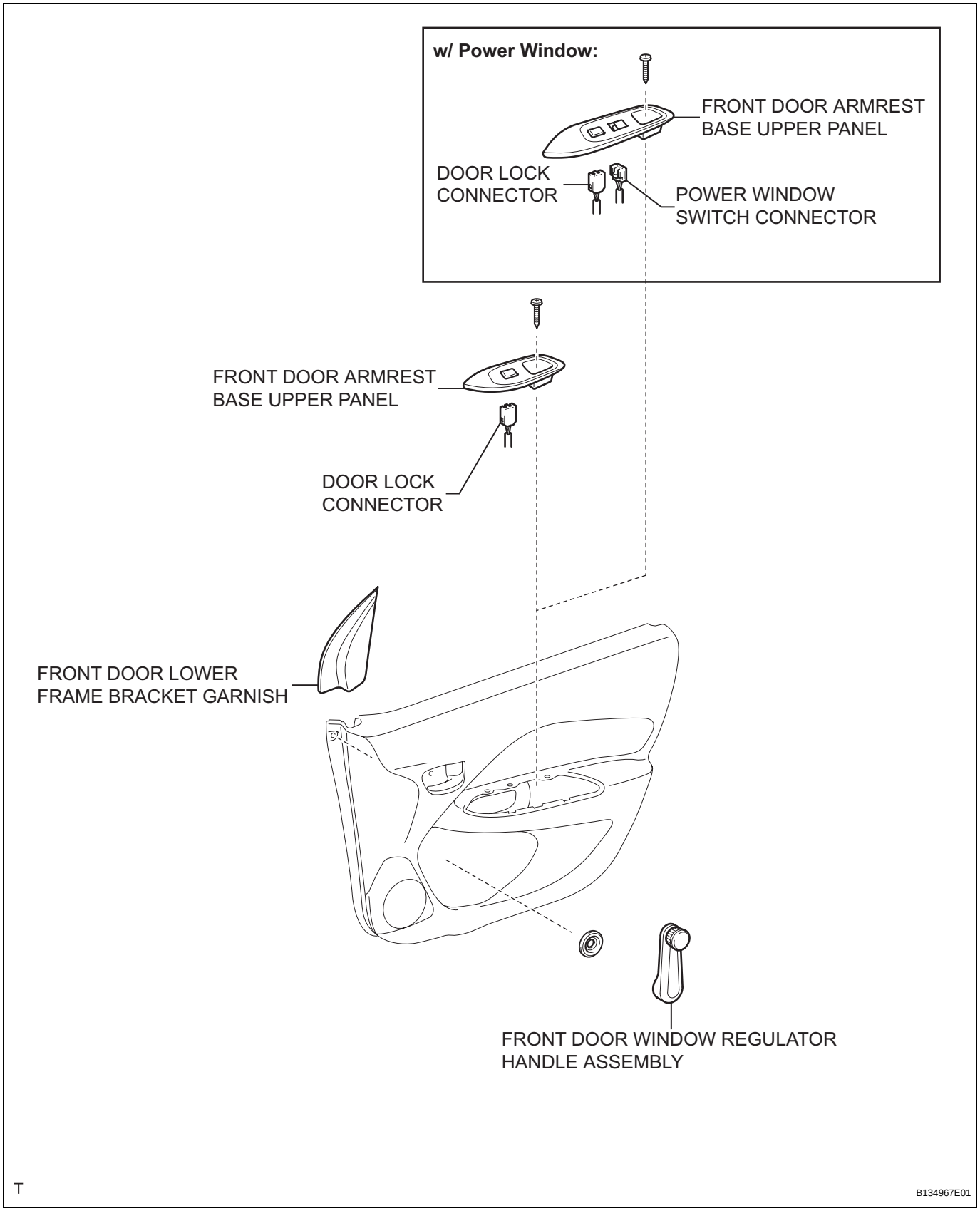

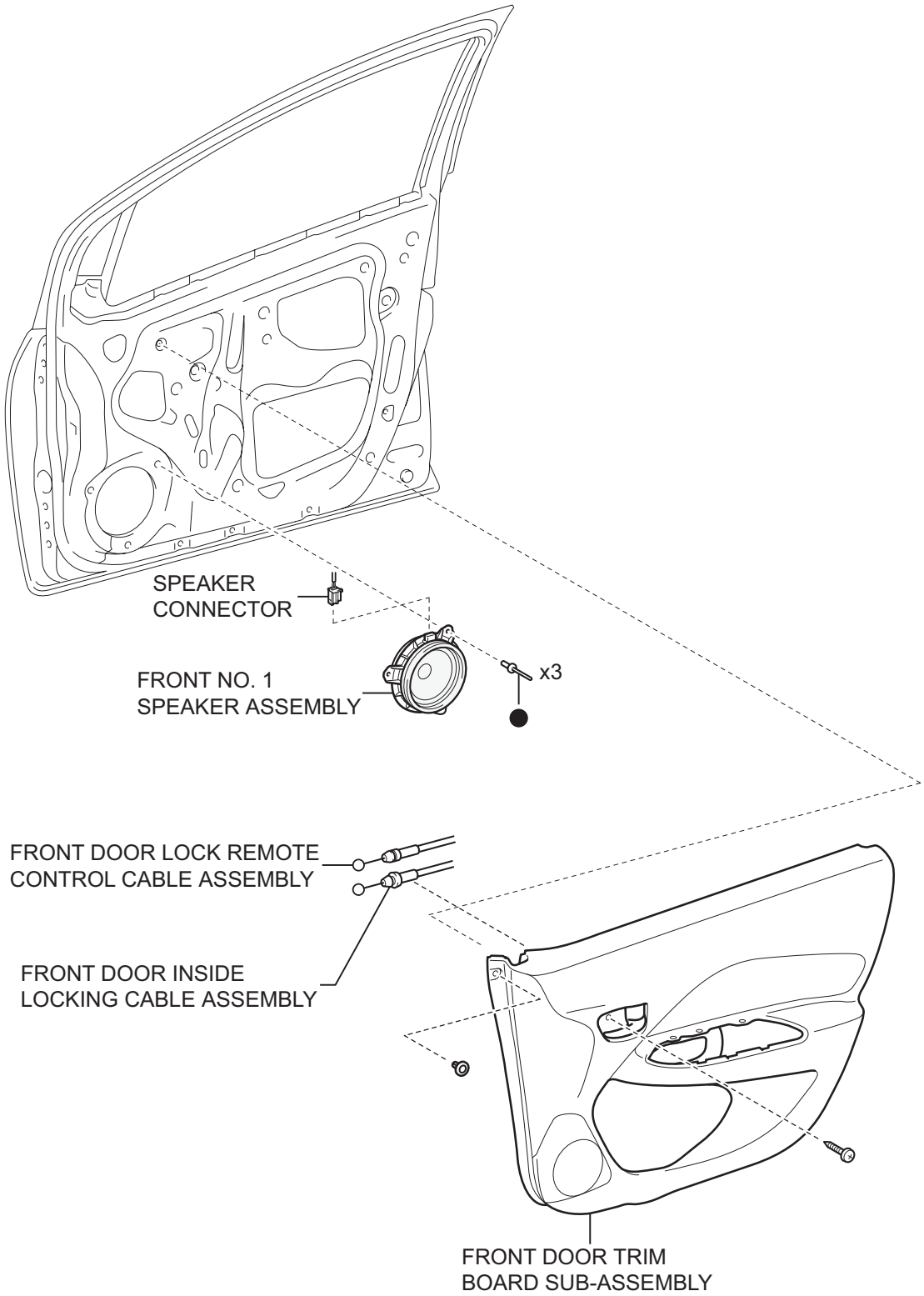

● Non-reusable part

T

B134968E01

ON-VEHICLE INSPECTION

1. INSPECT FRONT NO. 1 SPEAKER ASSEMBLY

HINT:

Remove interior parts so that the front No. 1 speaker can be seen.

(a) Check the installation.

OK:

The speaker is securely installed.

If the result is not as specified, reinstall the front No. 1 speaker.

(b) Visually check the speaker.

OK:

The cone paper of the speaker is not torn.

If the result is not as specified, replace the front No. 1 speaker.

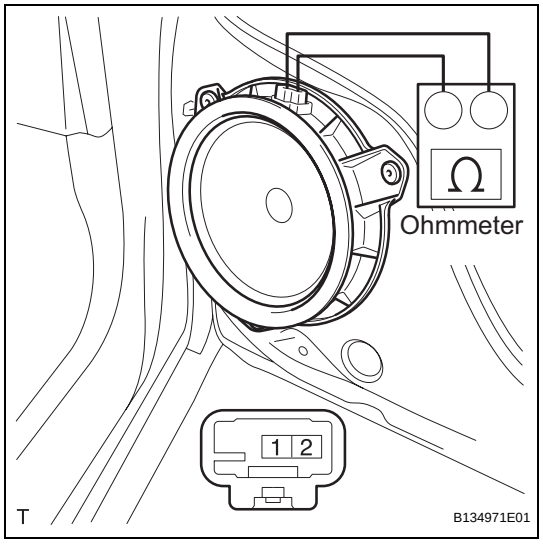

(c) Check the resistance.

(1) Disconnect the speaker connector.

(2) Using an ohmmeter, measure the resistance between the terminals.

Standard resistance

Tester Connection	Specified Condition
1 - 2	Approximately 4 Ω

If the result is not as specified, replace the front No. 1 speaker.

AV

REMOVAL

HINT:
The procedure described below is for the RH side. Use the same procedure for both the RH and LH sides, unless otherwise specified.

1. **DISCONNECT CABLE FROM NEGATIVE BATTERY TERMINAL**
2. **REMOVE FRONT DOOR WINDOW REGULATOR HANDLE ASSEMBLY (w/o Power Window) (See page ED-9)**
3. **REMOVE FRONT DOOR LOWER FRAME BRACKET GARNISH (See page ED-9)**
4. **REMOVE FRONT DOOR ARMREST BASE UPPER PANEL (See page ED-9)**
5. **REMOVE FRONT DOOR TRIM BOARD SUB-ASSEMBLY (See page ED-11)**
6. **REMOVE FRONT NO. 1 SPEAKER ASSEMBLY**
   (a) Disconnect the speaker connector.

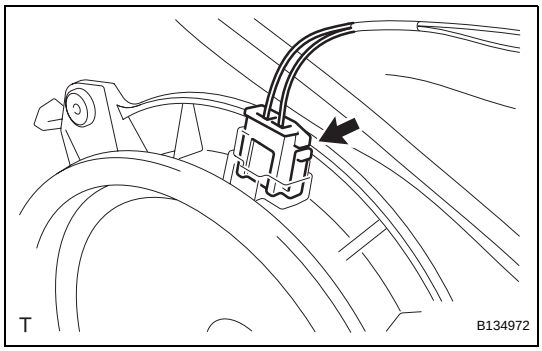

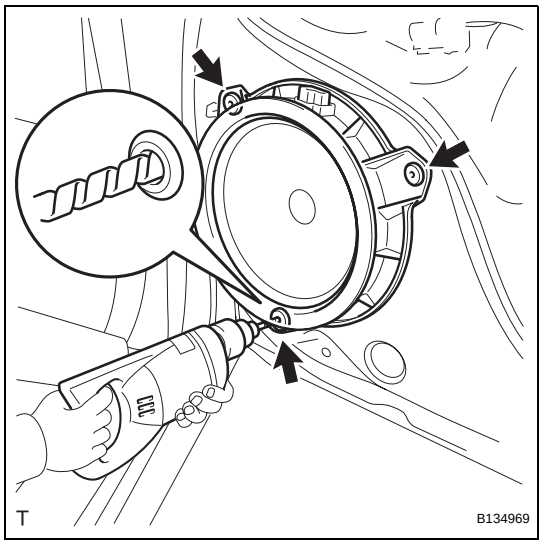

   (b) Drill out the 3 rivet heads using a drill with a bit diameter of less than 4 mm (0.16 in.), and remove the front No.1 speaker.
   (c) Operate the drill around the rivet head circumference and cut out the flange.
   CAUTION:
   Be careful. The cut rivet is very hot.
   NOTICE:
   Do not drill the rivet at an angle as this will cause damage to the drill and drill hole. Line up the drill and rivet, and carefully drill the rivet head straight out.
   (d) After drilling out the flange, continue drilling to push out the shards on the drill.
   (e) Using a vacuum cleaner, remove the rivet fragments and shavings from the inside of the door.

AV

INSTALLATION

HINT:
The procedure described below is for the RH side. Use the same procedure for both the RH and LH sides, unless otherwise specified.

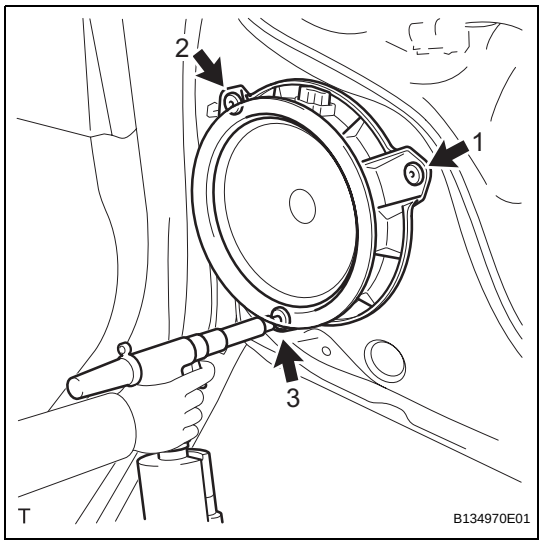

1. INSTALL FRONT NO. 1 SPEAKER ASSEMBLY

(a) Using an air riveter or hand riveter, install the front No. 1 speaker with 3 new strike rivets.
HINT:
Install the new strike rivets in the order shown in the illustration.

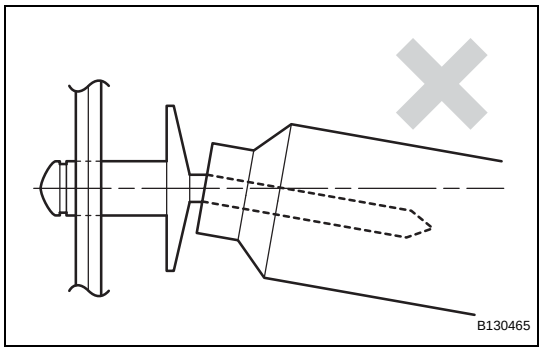

NOTICE:

- **Do not pry the rivet with the riveter, as this will cause damage to the riveter and mandrel.**

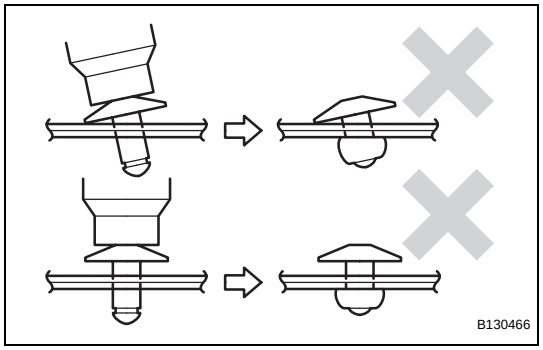

- **Confirm that the rivets are seated properly against the speaker.**
- **Do not tilt the riveter when installing the rivet onto the speaker.**
- **Do not leave any space between the rivet head and speaker.**

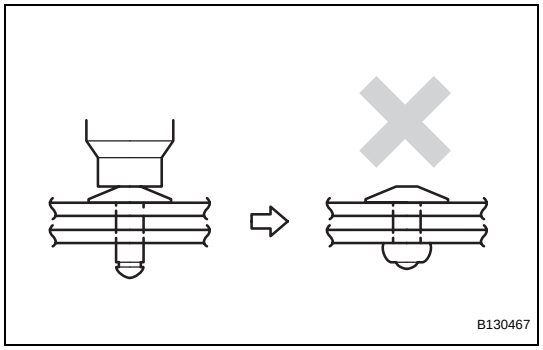

- **Do not leave any space between the speaker and door. Firmly hold the 2 items together while installing the rivet.**

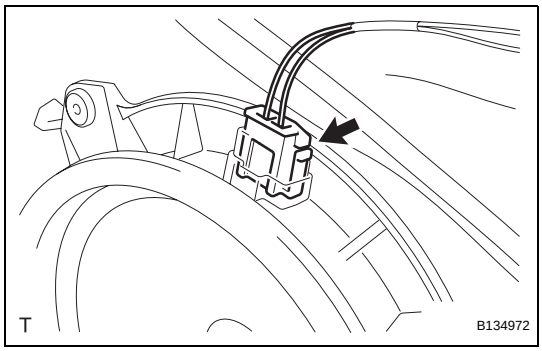

(b) Connect the speaker connector.

2. **INSTALL FRONT DOOR TRIM BOARD SUB-ASSEMBLY (See page ED-26)**

3. **INSTALL FRONT DOOR ARMREST BASE UPPER PANEL (See page ED-28)**

4. **INSTALL FRONT DOOR LOWER FRAME BRACKET GARNISH (See page ED-28)**

5. **INSTALL FRONT DOOR WINDOW REGULATOR HANDLE ASSEMBLY (w/o Power Window) (See page ED-29)**

6. **CONNECT CABLE TO NEGATIVE BATTERY TERMINAL**
Torque: 5.4 N*m (55 kgf*cm, 48 in.*lbf)

FRONT NO. 1 SPEAKER (for Hatchback)

COMPONENTS

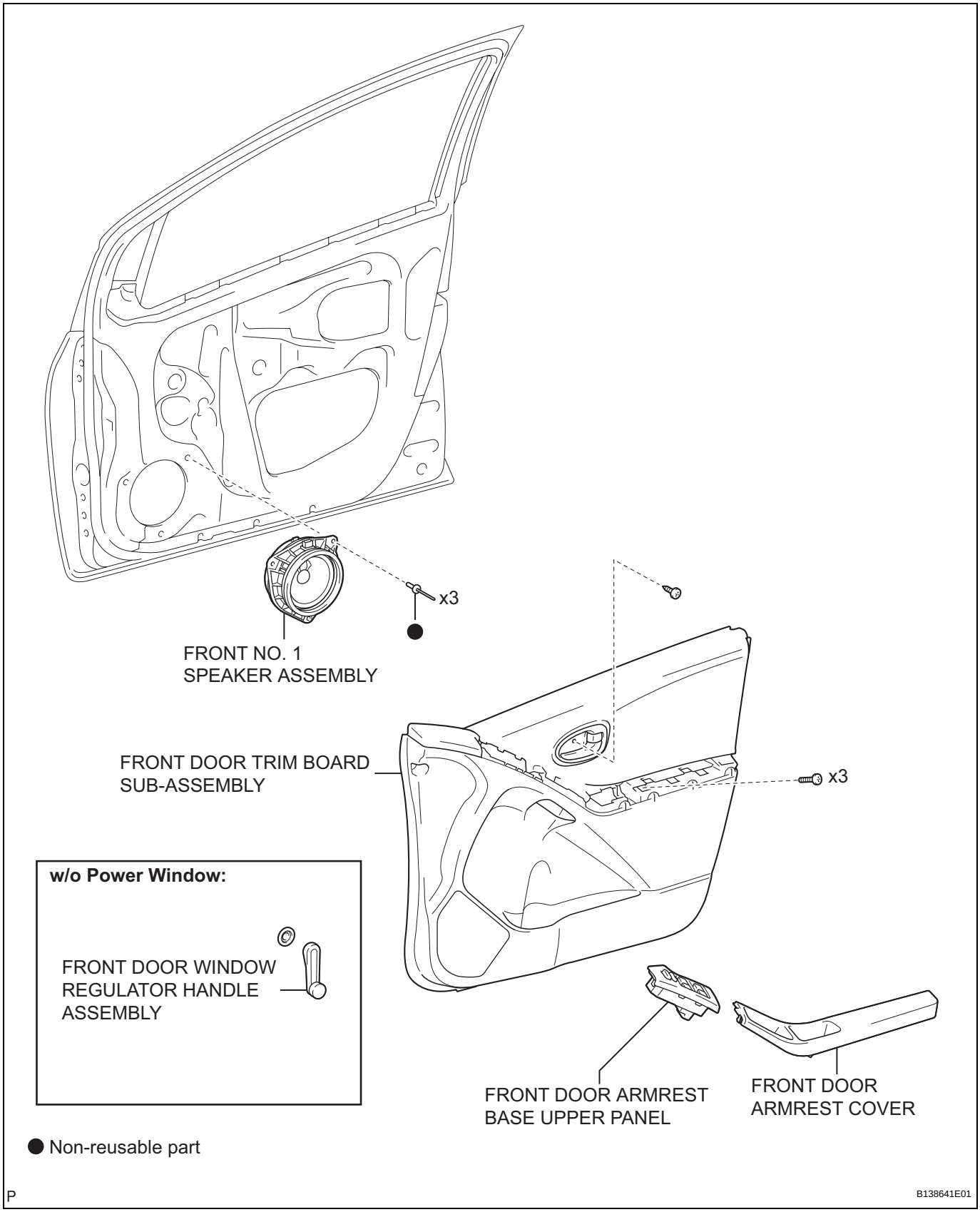

ON-VEHICLE INSPECTION

1. INSPECT FRONT NO. 1 SPEAKER

HINT:

Remove interior parts so that the front No. 1 speaker can be seen.

(a) Check the speaker installation.

OK:

The speaker is securely installed.

If the result is not as specified, reinstall the front No. 1 speaker.

(b) Visually check the speaker.

OK:

The cone paper of the speaker is not torn.

If the result is not as specified, replace the front No. 1 speaker.

(c) Check the speaker resistance.

(1) Disconnect the speaker connector.

(2) Using an ohmmeter, measure the resistance between the terminals.

Standard resistance

Tester Connection	Specified Condition
1 - 2	Approximately 4 Ω

If the result is not as specified, replace the front No. 1 speaker.

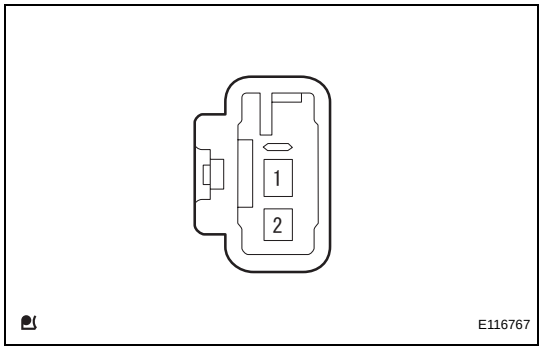

AV

REMOVAL

HINT:
The procedure described below is for the LH sides. Use the same procedure for both the RH and LH side, unless otherwise specified.

1. DISCONNECT CABLE FROM NEGATIVE BATTERY TERMINAL

2. REMOVE FRONT DOOR WINDOW REGULATOR HANDLE ASSEMBLY (w/o Power Window) (See page ED-57)

3. REMOVE FRONT DOOR ARMREST COVER (See page ED-33)

4. REMOVE FRONT DOOR ARMREST BASE UPPER PANEL

(a) w/ Power Window:
(1) Remove the front door armrest base upper panel (See page ED-33).

(b) w/o Power Window:
(1) Remove the front door armrest base upper panel (See page ED-57).

5. REMOVE FRONT DOOR TRIM BOARD SUB-ASSEMBLY

(a) w/ Power Window:
(1) Remove the front door trim board sub-assembly (See page ED-34).

(b) w/o Power Window:
(1) Remove the front door trim board sub-assembly (See page ED-58).

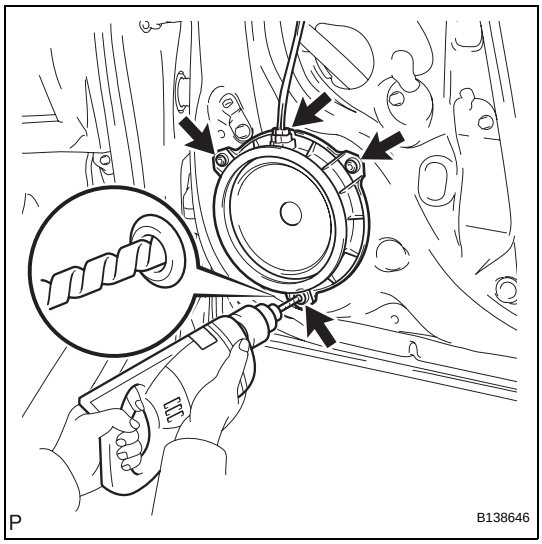

6. REMOVE FRONT NO. 1 SPEAKER ASSEMBLY

(a) Disconnect the speaker connector.

(b) Drill out the 3 rivet heads using a drill with a bit diameter of less than 4 mm (0.16 in.), and remove the front No.1 speaker assembly from the front door panel.

(c) Operate the drill around the rivet head circumference and cut out the flange.
CAUTION:
Be careful. The cut rivet is very hot.
NOTICE:
Do not drill the rivet at an angle as this will cause damage to the drill and drill hole. Line up the drill and rivet, and carefully drill the rivet head straight out.

(d) After drilling out the flange, continue drilling to push out the shards on the drill.

(e) Using a vacuum cleaner, remove the rivet fragments and shavings from the inside of the door.

AV

INSTALLATION

HINT:
The procedure described below is for the LH side. Use the same procedure for both the RH and LH sides, unless otherwise specified.

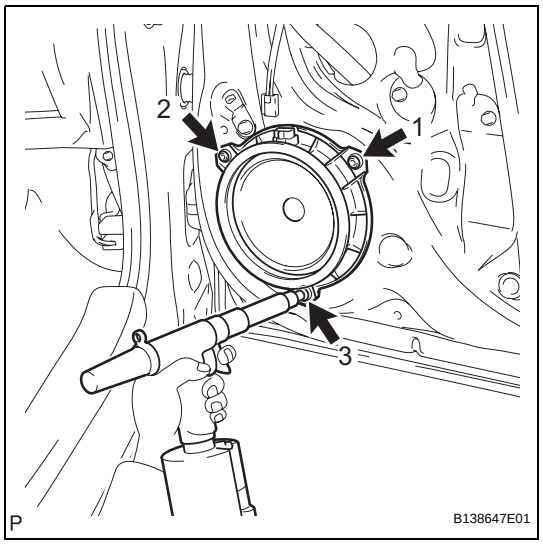

1. INSTALL FRONT NO. 1 SPEAKER ASSEMBLY

(a) Using an air riveter or hand riveter, install the front No.1 speaker assembly onto the front door panel with 3 new strike rivets.
HINT:
Install the new strike rivets in the order shown in the illustration.

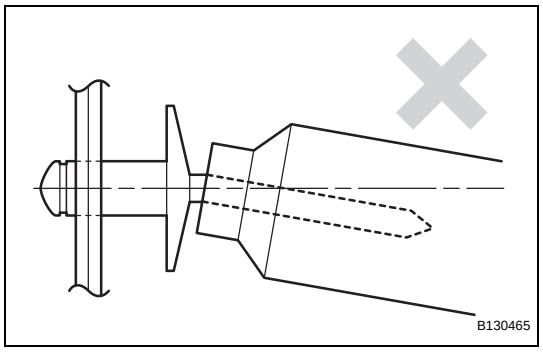

NOTICE:

- **Do not pry the rivet with the riveter, as this will cause damage to the riveter and mandrel.**

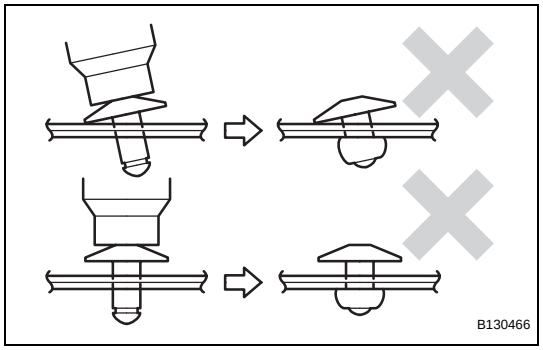

- **Confirm that the rivets are seated properly against the speaker.**
- **Do not tilt the riveter when installing the rivet onto the speaker.**
- **Do not leave any space between the rivet head and speaker.**

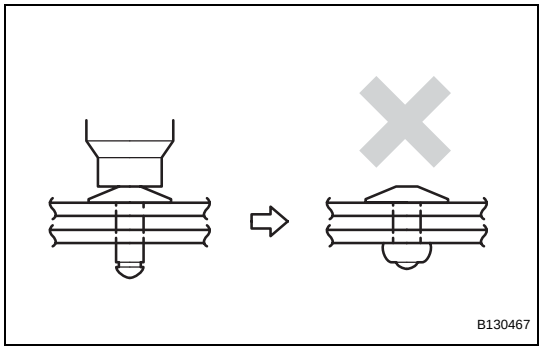

- **Do not leave any space between the speaker and door. Firmly hold the 2 items together while installing the rivet.**

AV

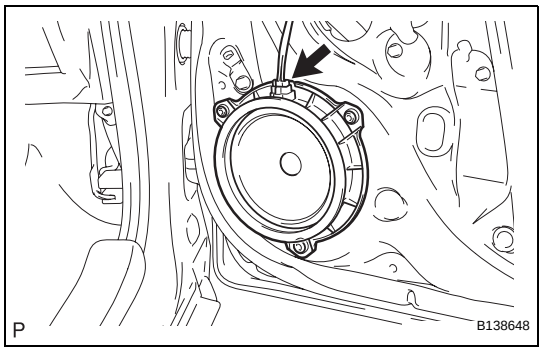

(b) Connect the speaker connector.

2. INSTALL FRONT DOOR TRIM BOARD SUB-ASSEMBLY

(a) w/ Power Window:
(1) Install the front door trim board sub-assembly (See page ED-51).

(b) w/o Power Window:
(1) Install the front door trim board sub-assembly (See page ED-74).

3. INSTALL FRONT DOOR ARMREST BASE UPPER PANEL

(a) w/ Power Window:
(1) Install the front door armrest base upper panel (See page ED-53).

(b) w/o Power Window:
(1) Install the front door armrest base upper panel (See page ED-74).

4. INSTALL FRONT DOOR ARMREST COVER (See page ED-53)

5. INSTALL FRONT DOOR WINDOW REGULATOR HANDLE ASSEMBLY (w/o Power Window) (See page ED-75)

6. CONNECT CABLE TO NEGATIVE BATTERY TERMINAL
Torque: 5.4 N*m (55 kgf*cm, 48 in.*lbf)

REAR SPEAKER (for Sedan)

COMPONENTS

for 60/40 Split Seat Type:

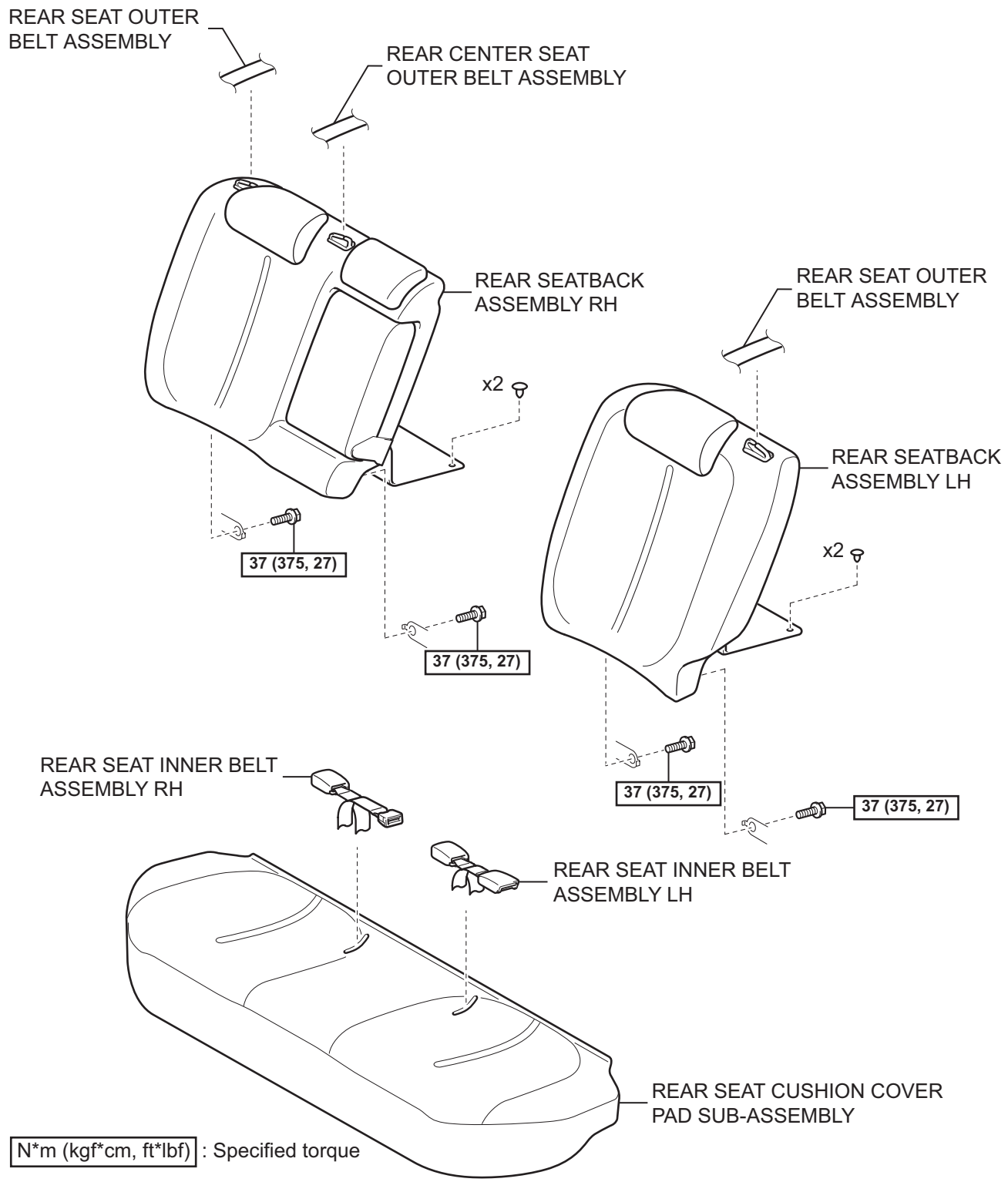

AV

for Fixed Seat Type:

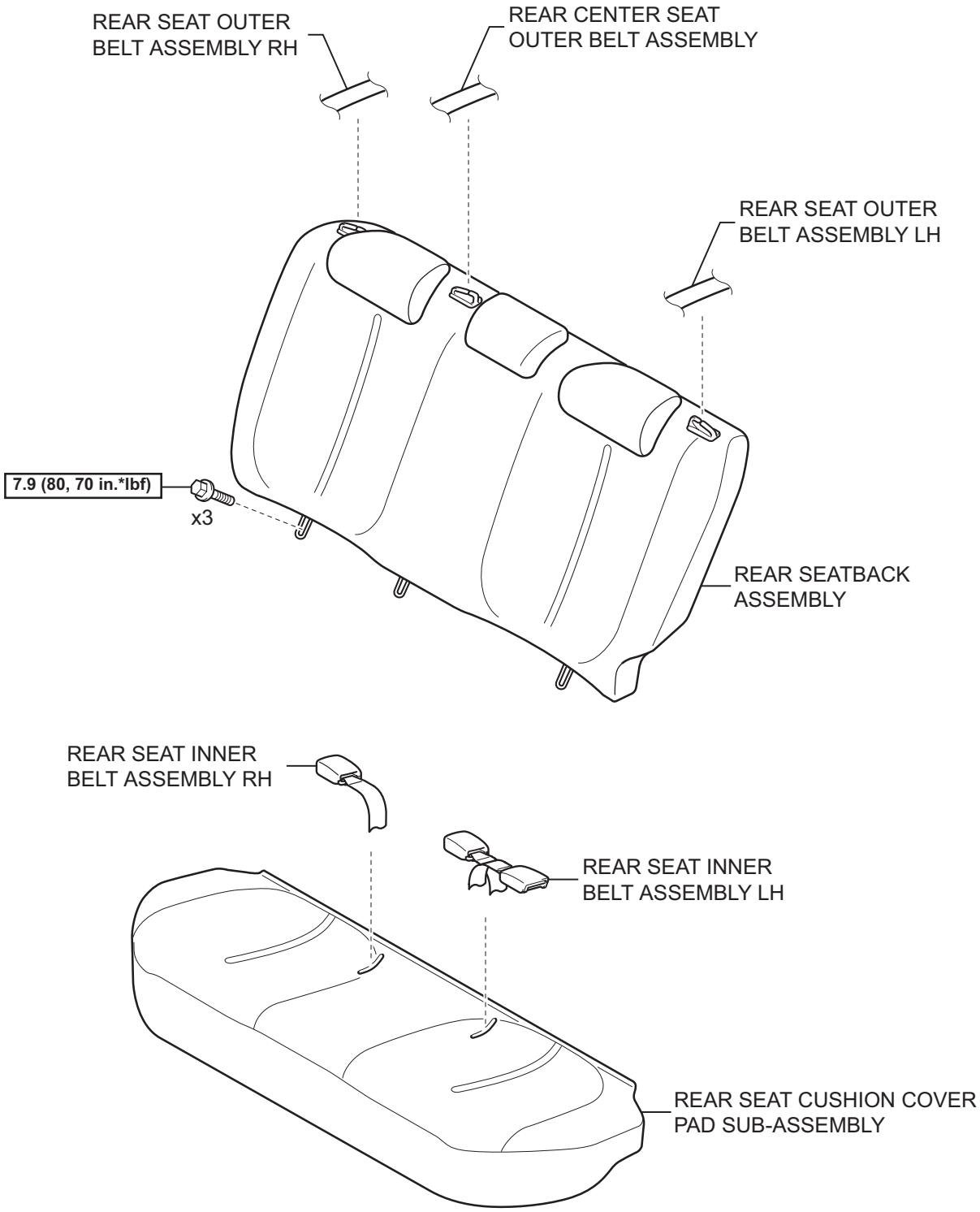

N*m (kgf*cm, ft*lbf) : Specified torque

T

B138441E06

for 60/40 Split Seat Type:

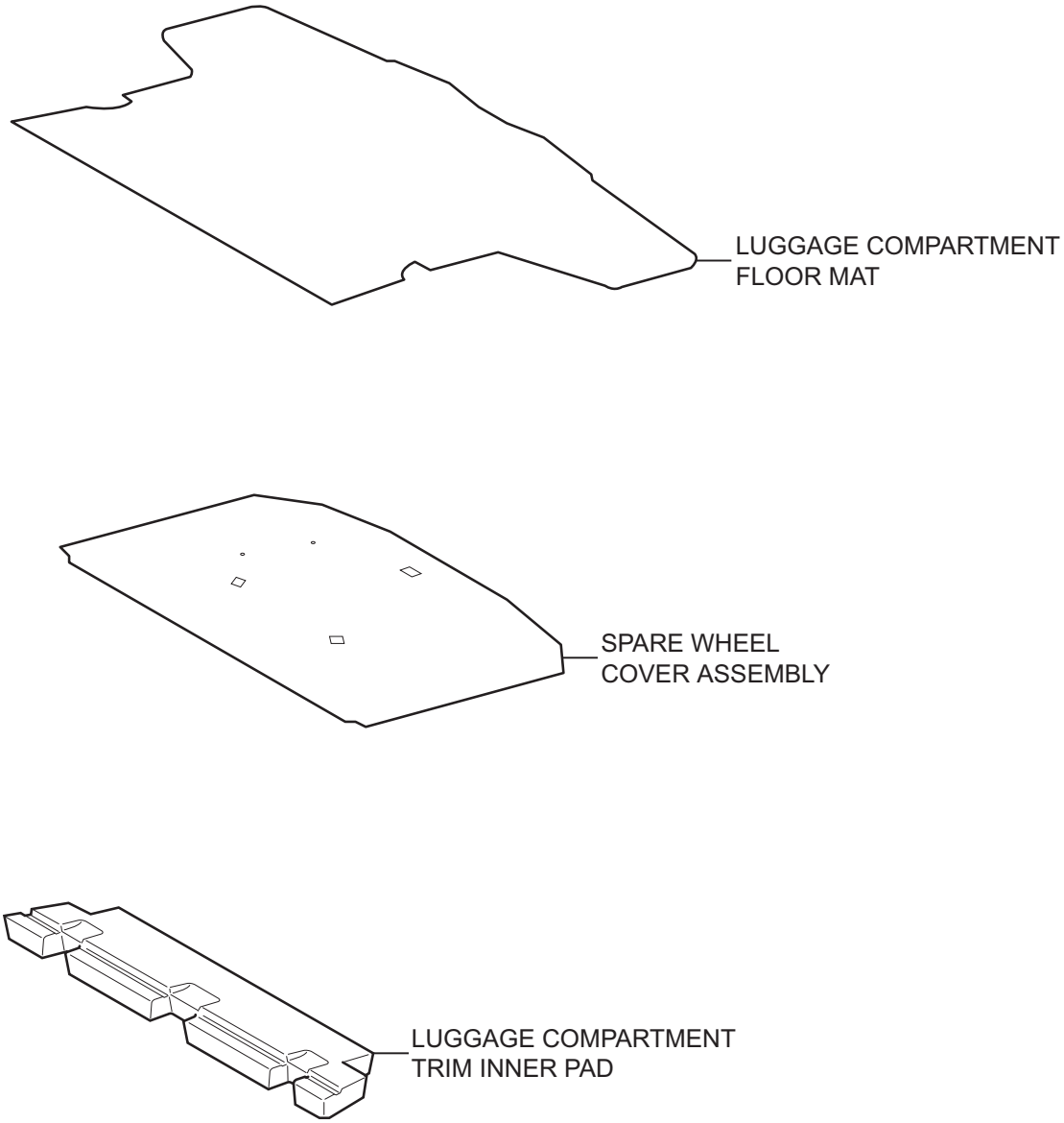

for Grand Tire:

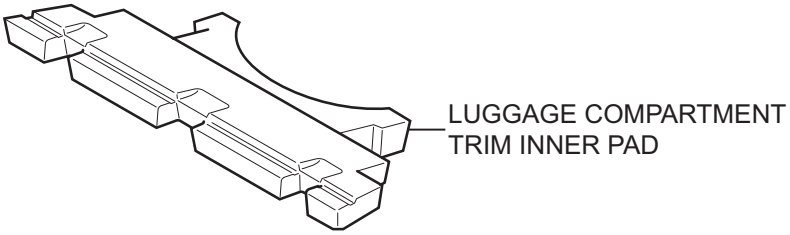

T

B138565E01

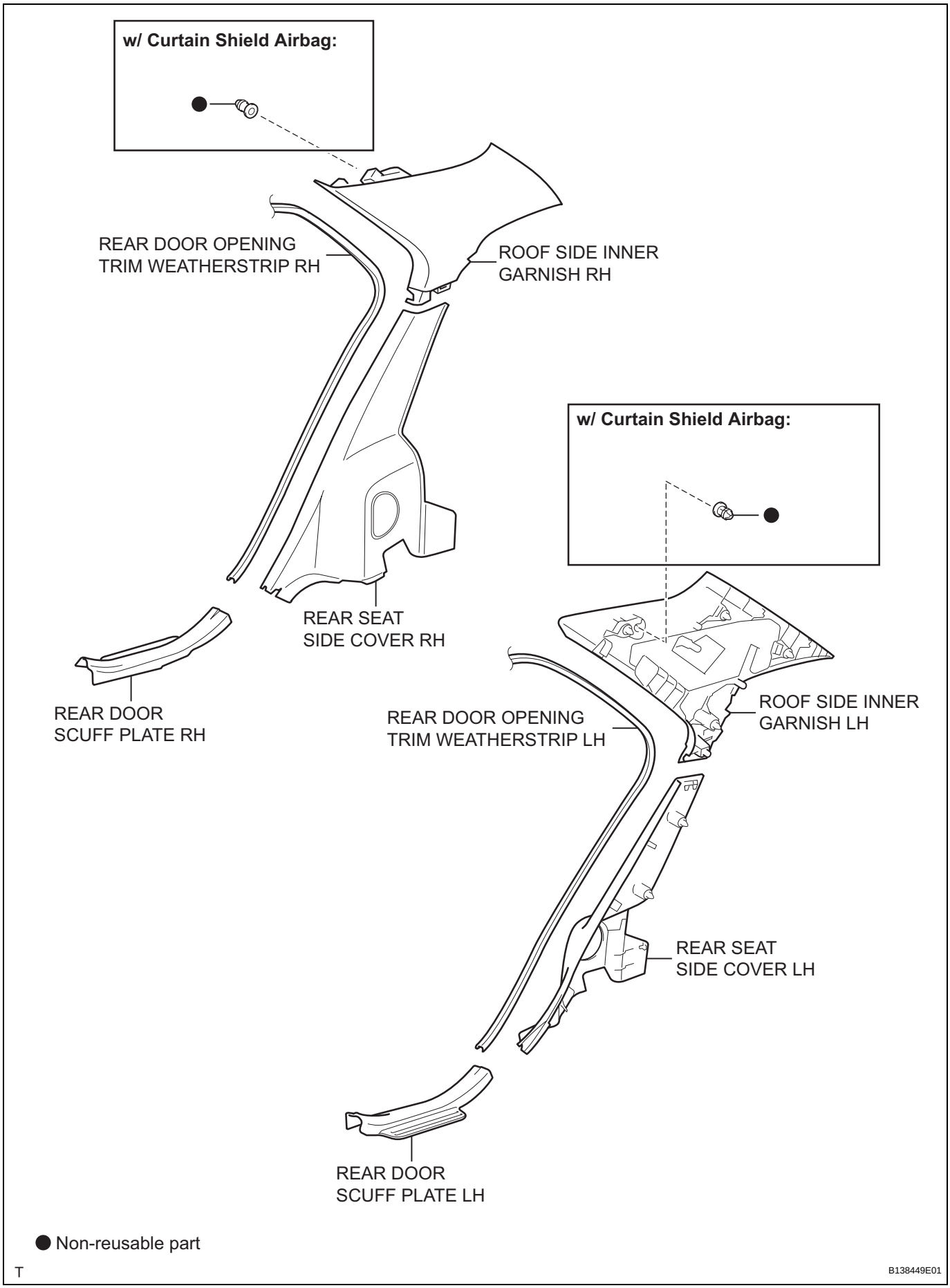
w/ Curtain Shield Airbag:
REAR DOOR OPENING TRIM WEATHERSTRIP RH
ROOF SIDE INNER GARNISH RH
REAR SEAT SIDE COVER RH
REAR DOOR SCUFF PLATE RH
w/ Curtain Shield Airbag:
ROOF SIDE INNER GARNISH LH
REAR DOOR OPENING TRIM WEATHERSTRIP LH
REAR SEAT SIDE COVER LH
REAR DOOR SCUFF PLATE LH
● Non-reusable part
T
B138449E01

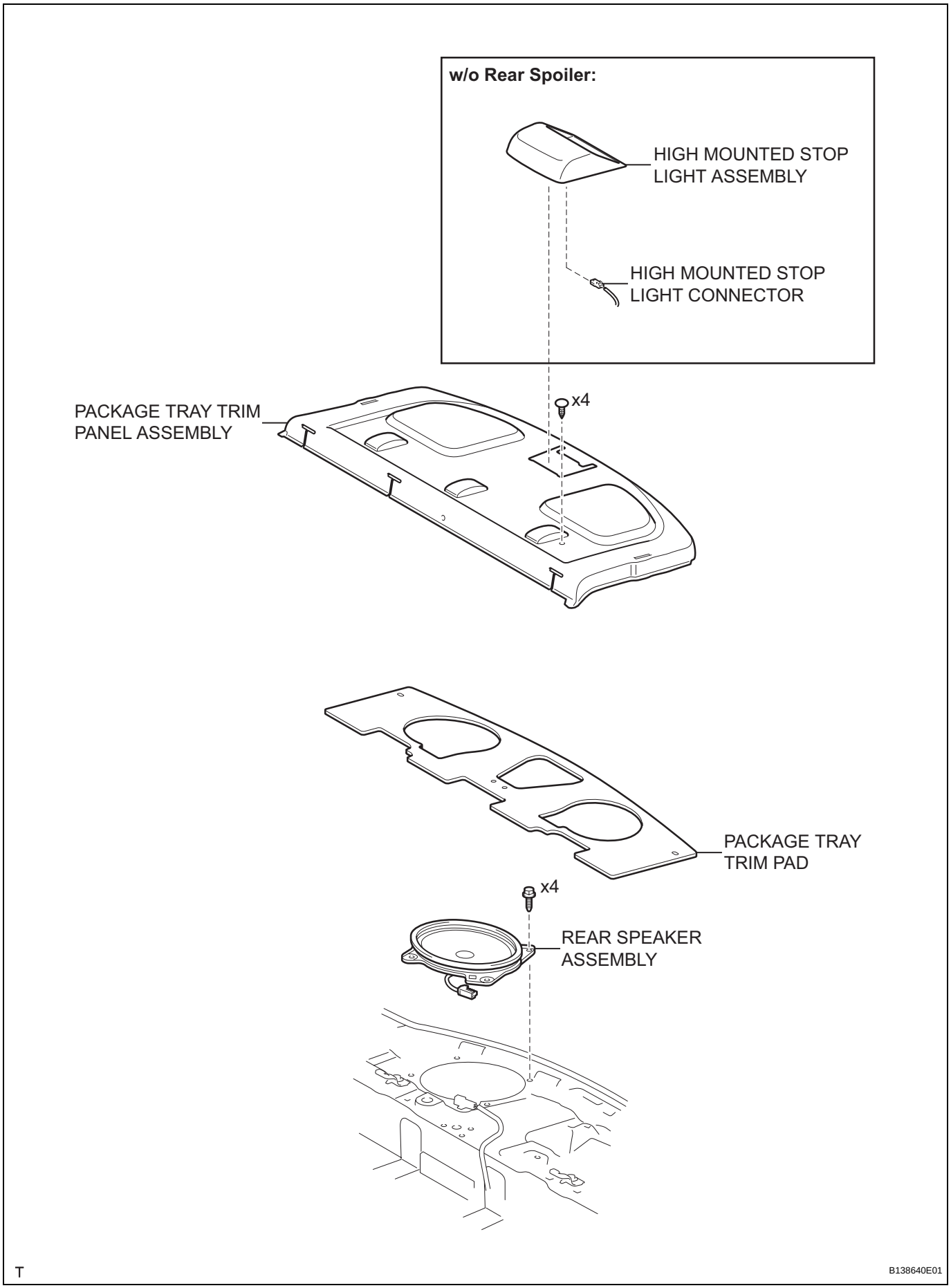
w/o Rear Spoiler:
HIGH MOUNTED STOP LIGHT ASSEMBLY
HIGH MOUNTED STOP LIGHT CONNECTOR
PACKAGE TRAY TRIM PANEL ASSEMBLY
x4
PACKAGE TRAY TRIM PAD
x4
REAR SPEAKER ASSEMBLY
T
B138640E01

ON-VEHICLE INSPECTION

1. REAR SPEAKER ASSEMBLY

HINT:
Remove interior parts so that the rear speaker can be seen.

(a) Check the installation.
OK:
The speaker is securely installed.
If the result is not as specified, reinstall the rear speaker.

(b) Visually check the speaker.
OK:
The cone paper of the speaker is not torn.
If the result is not as specified, replace the rear speaker.

(c) Check the resistance.
(1) Disconnect the speaker connector.
(2) Using an ohmmeter, measure the resistance between the terminals.
Standard resistance

Tester Connection	Specified Condition
1 - 2	Approximately 4 Ω

If the result is not as specified, replace the rear speaker.

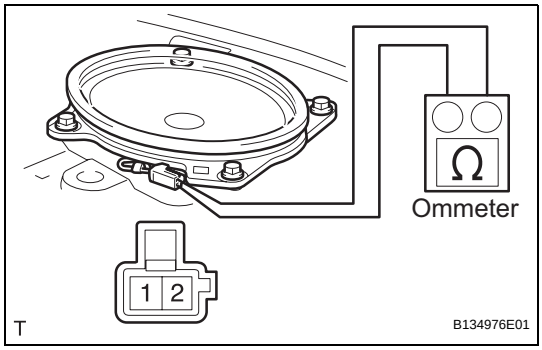

REMOVAL

HINT:
The procedure described below is for the RH side. Use the same procedure for both the RH and LH sides, unless otherwise specified.

1. **DISCONNECT CABLE FROM NEGATIVE BATTERY TERMINAL**
2. **REMOVE REAR SEAT CUSHION COVER PAD SUB-ASSEMBLY**
   (a) for 60/40 Split Seat Type:
      (1) Remove the rear seat cushion cover pad sub-assembly (See page SE-46).
   (b) for Fixed Seat Type:
      (1) Remove the rear seat cushion cover pad sub-assembly (See page SE-106).
3. **REMOVE REAR SEATBACK ASSEMBLY RH (for 60/40 Split Seat Type) (See page SE-57)**
4. **REMOVE REAR SEATBACK ASSEMBLY LH (for 60/40 Split Seat Type) (See page SE-46)**
5. **REMOVE REAR SEATBACK ASSEMBLY (for Fixed Seat Type) (See page SE-106)**
6. **REMOVE LUGGAGE COMPARTMENT FLOOR MAT (for 60/40 Split Seat Type) (See page ED-133)**
7. **REMOVE SPARE WHEEL COVER ASSEMBLY (for 60/40 Split Seat Type) (See page ED-133)**
8. **REMOVE LUGGAGE COMPARTMENT TRIM INNER PAD (for 60/40 Split Seat Type) (See page ED-134)**
9. **REMOVE REAR DOOR SCUFF PLATE RH (See page IR-15)**
10. **REMOVE REAR DOOR SCUFF PLATE LH (See page IR-15)**
11. **REMOVE REAR DOOR OPENING TRIM WEATHERSTRIP RH**
    (a) Remove the rear door opening trim weatherstrip to the extent that the rear seat side cover and the roof side inner garnish.

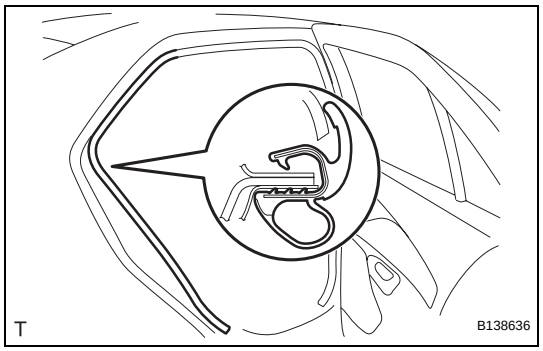

12. **REMOVE REAR DOOR OPENING TRIM WEATHERSTRIP LH**
    HINT:
    Use the same procedure as for the RH side.
13. **REMOVE REAR SEAT SIDE COVER RH (See page IR-16)**
14. **REMOVE REAR SEAT SIDE COVER LH (See page IR-16)**
15. **REMOVE ROOF SIDE INNER GARNISH RH (See page IR-16)**

16. REMOVE ROOF SIDE INNER GARNISH LH (See page IR-16)

17. REMOVE HIGH MOUNTED STOP LIGHT ASSEMBLY (w/o Rear Spoiler) (See page LI-141)

18. REMOVE PACKAGE TRAY TRIM PANEL ASSEMBLY

(a) Using a clip remover, remove the 4 clips.

(b) Disengage the 5 claws and remove the package tray trim panel.

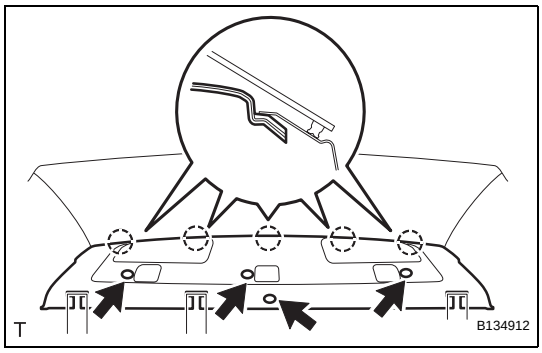

19. REMOVE PACKAGE TRAY TRIM PAD

(a) Remove the pack age tray trim pad.

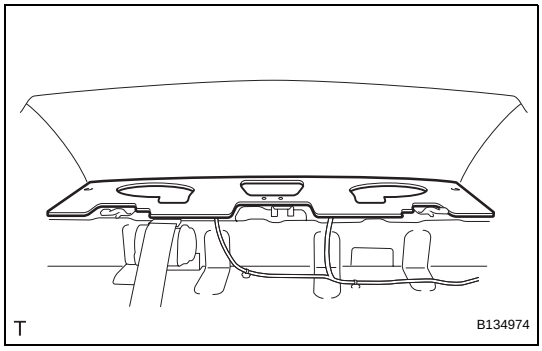

20. REMOVE REAR SPEAKER ASSEMBLY

(a) Disconnect the speaker connector.

(b) Remove the 4 bolts and the rear speaker.

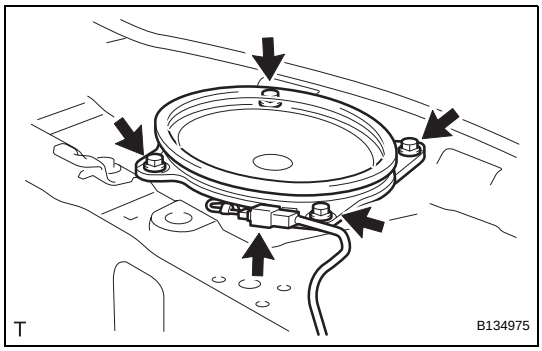

INSTALLATION

HINT:
The procedure described below is for the RH side. Use the same procedure for both the RH and LH sides, unless otherwise specified.

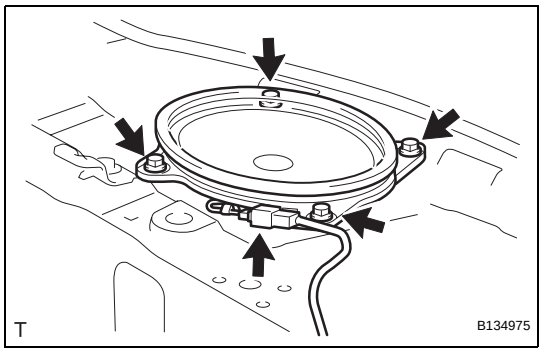

1. INSTALL REAR SPEAKER ASSEMBLY
(a) Install the rear speaker with the 4 bolts.
(b) Connect the speaker connector.

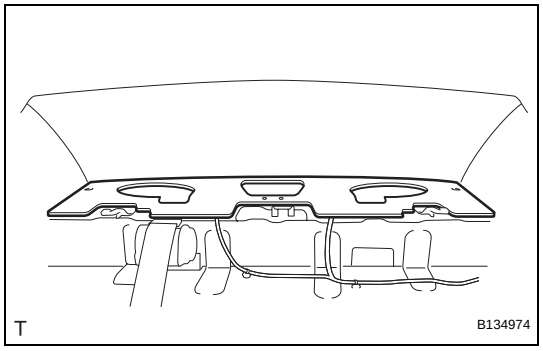

2. INSTALL PACKAGE TRAY TRIM PAD
(a) Install the package tray trim pad.

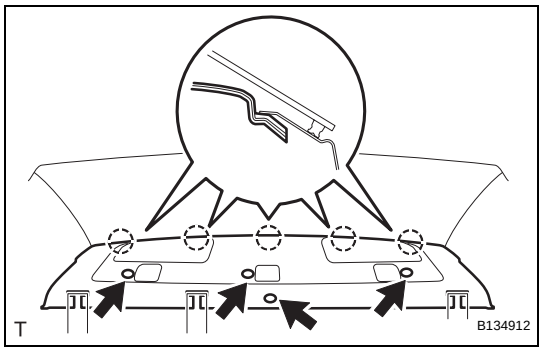

3. INSTALL PACKAGE TRAY TRIM PANEL ASSEMBLY
(a) Engage the 5 claws and install the package tray trim.
(b) Install the 4 clips.

4. INSTALL HIGH MOUNTED STOP LIGHT ASSEMBLY (w/o Rear Spoiler) (See page LI-142)

5. INSTALL ROOF SIDE INNER GARNISH RH (See page IR-32)

6. INSTALL ROOF SIDE INNER GARNISH LH (See page IR-33)

7. INSTALL REAR SEAT SIDE COVER RH (See page IR-33)

8. INSTALL REAR SEAT SIDE COVER LH (See page IR-33)

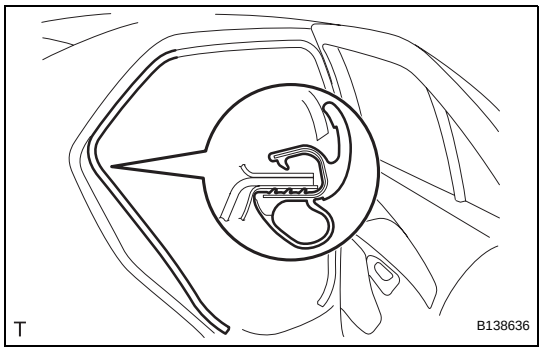

9. INSTALL REAR DOOR OPENING TRIM WEATHERSTRIP RH
(a) Install the rear door opening trim weatherstrip.

10. INSTALL REAR DOOR OPENING TRIM WEATHERSTRIP LH
HINT:
Use the same procedure as for the RH side.

11. INSTALL REAR DOOR SCUFF PLATE RH (See page IR-34)

12. INSTALL REAR DOOR SCUFF PLATE LH (See page IR-34)

13. INSTALL LUGGAGE COMPARTMENT TRIM INNER PAD (for 60/40 Split Seat Type) (See page ED-136)

14. INSTALL SPARE WHEEL COVER ASSEMBLY (for 60/40 Split Seat Type) (See page ED-137)

15. INSTALL LUGGAGE COMPARTMENT FLOOR MAT (for 60/40 Split Seat Type) (See page ED-137)

16. INSTALL REAR SEATBACK ASSEMBLY RH (for 60/40 Split Seat Type) (See page SE-65)

17. INSTALL REAR SEATBACK ASSEMBLY LH (for 60/40 Split Seat Type) (See page SE-52)

18. INSTALL REAR SEATBACK ASSEMBLY (for Fixed Seat Type) (See page SE-108)

19. INSTALL REAR SEAT CUSHION COVER PAD SUB-ASSEMBLY
(a) for 60/40 Split Seat Type:
(1) Install the rear seat cushion cover pad sub-assembly (See page SE-53).
(b) for Fixed Seat Type:
(1) Install the rear seat cushion cover pad sub-assembly (See page SE-109).

20. CONNECT CABLE TO NEGATIVE BATTERY TERMINAL
Torque: 5.4 N*m (55 kgf*cm, 48 in.*lbf)

REAR SPEAKER (for Hatchback 5 Door)

COMPONENTS

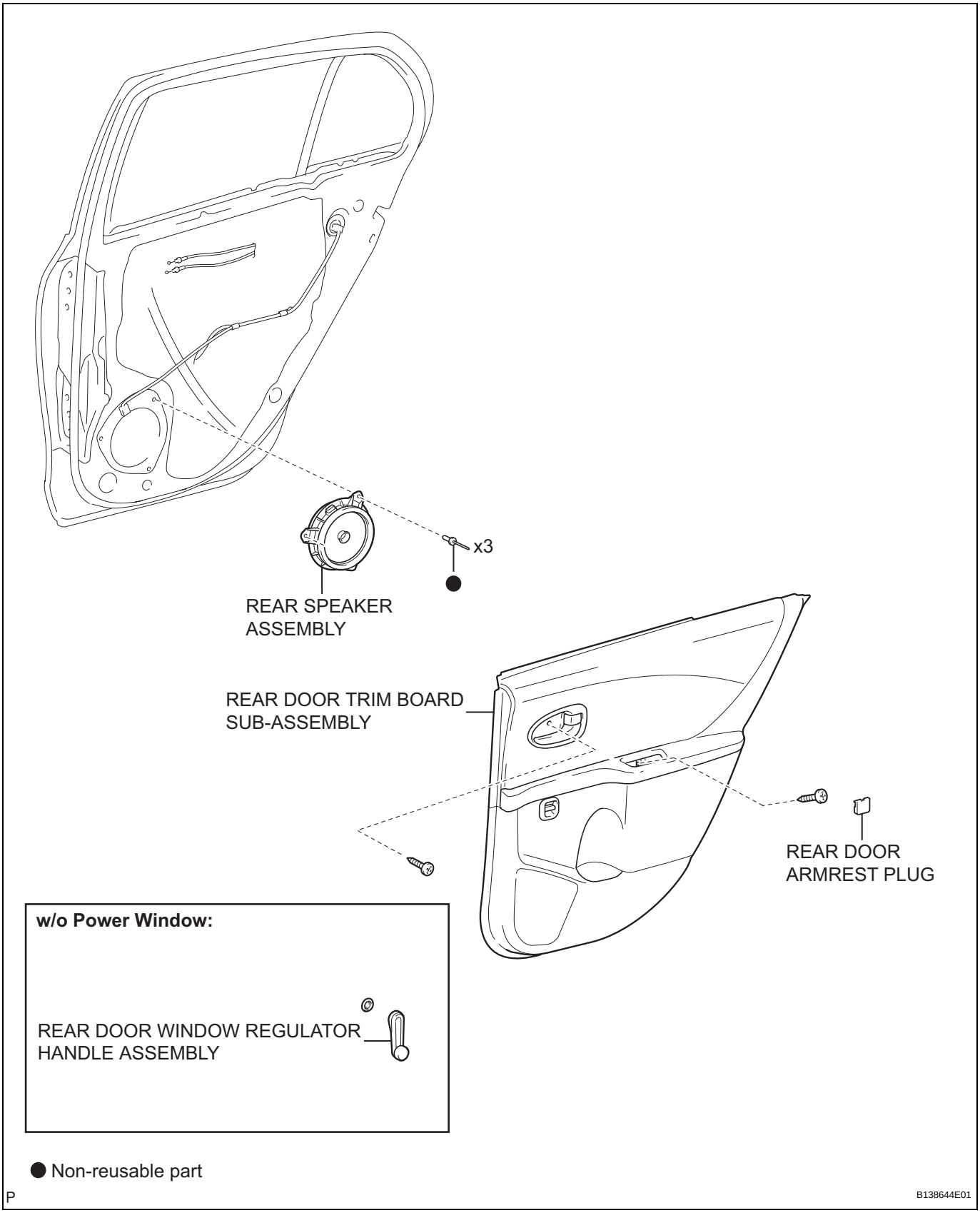

ON-VEHICLE INSPECTION

1. INSPECT REAR SPEAKER ASSEMBLY

HINT:
Remove interior parts so that the rear speaker can be seen.

(a) Check the speaker installation.
OK:
The speaker is securely installed.
If the result is not as specified, reinstall the rear speaker.

(b) Visually check the speaker.
OK:
The cone paper of the speaker is not torn.
If the result is not as specified, replace the rear speaker.

(c) Check the speaker resistance.
(1) Disconnect the speaker connector.
(2) Using an ohmmeter, measure the resistance between the terminals.
Standard resistance

Tester Connection	Specified Condition
1 - 2	Approximately 4 Ω

If the result is not as specified, replace the rear speaker.

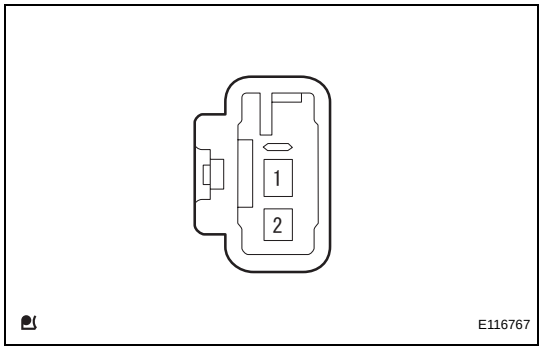

AV

REMOVAL

HINT:
The procedure described below is for the LH side. Use the same procedure for both the RH and LH sides, unless otherwise specified.

1. DISCONNECT CABLE FROM NEGATIVE BATTERY TERMINAL

2. REMOVE REAR DOOR WINDOW REGULATOR HANDLE ASSEMBLY (w/o Power Window) (See page ED-115)

3. REMOVE REAR DOOR TRIM BOARD SUB-ASSEMBLY

(a) w/ Power Window:
(1) Remove the rear door trim board sub-assembly (See page ED-98).

(b) w/o Power Window:
(1) Remove the rear door trim board sub-assembly (See page ED-115).

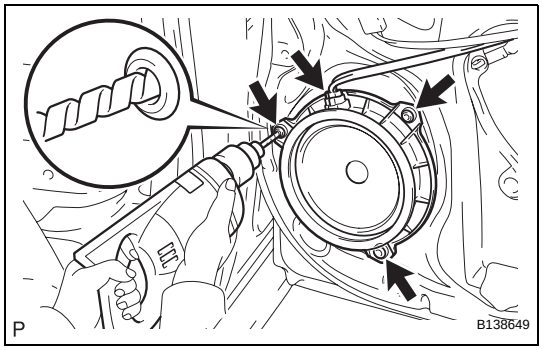

4. REMOVE REAR SPEAKER ASSEMBLY

(a) Disconnect the speaker connector.
(b) Drill out the 3 rivet heads using a drill with a bit diameter of less than 4 mm (0.16 in.), and remove the rear speaker assembly from the rear door panel.
(c) Operate the drill around the rivet head circumference and cut out the flange.
CAUTION:
Be careful. The cut rivet is very hot.
NOTICE:
Do not drill the rivet at an angle as this will cause damage to the drill and drill hole. Line up the drill and rivet, and carefully drill the rivet head straight out.
(d) After drilling out the flange, continue drilling to push out the shards on the drill.
(e) Using a vacuum cleaner, remove the rivet fragments and shavings from the inside of the door.

INSTALLATION

HINT:
The procedure described below is for the LH side. Use the same procedure for both the RH and LH sides, unless otherwise specified.

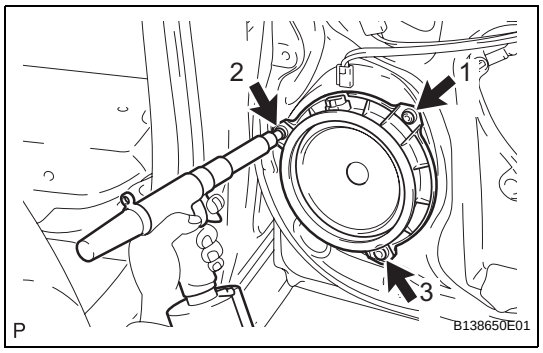

1. INSTALL REAR SPEAKER ASSEMBLY

(a) Using an air riveter or hand riveter, install the rear speaker assembly onto the front door panel with 3 new strike rivets.
HINT:
Install the new strike rivets in the order shown in the illustration.

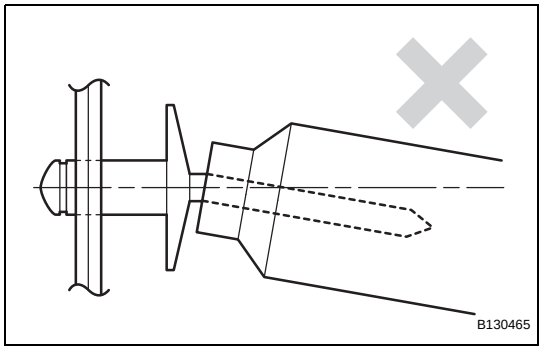

NOTICE:

- **Do not pry the rivet with the riveter, as this will cause damage to the riveter and mandrel.**

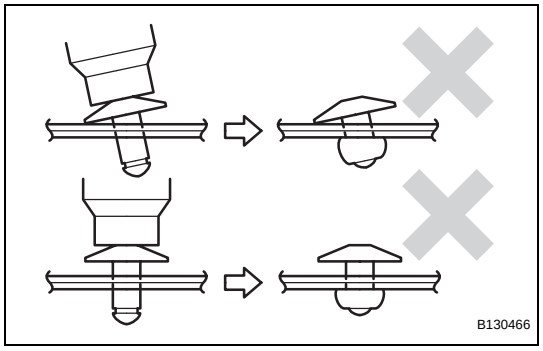

- **Confirm that the rivets are seated properly against the speaker.**
- **Do not tilt the riveter when installing the rivet onto the speaker.**
- **Do not leave any space between the rivet head and speaker.**

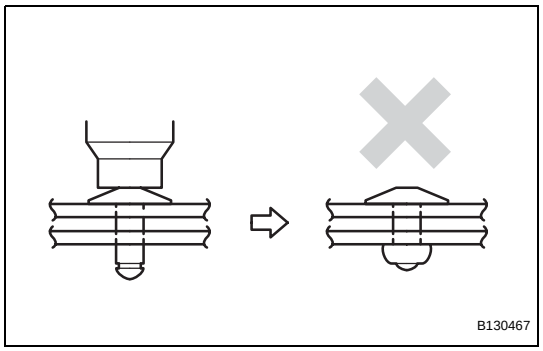

- **Do not leave any space between the speaker and door. Firmly hold the 2 items together while installing the rivet.**

AV

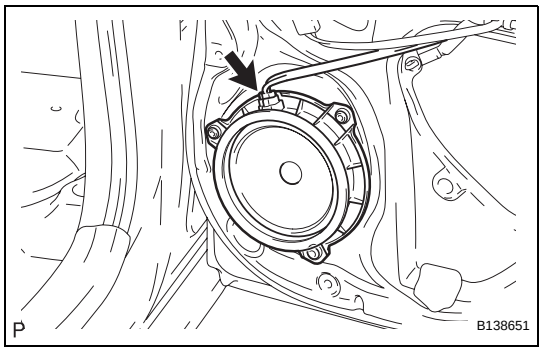

(b) Connect the speaker connector.

2. INSTALL REAR DOOR TRIM BOARD SUB-ASSEMBLY

(a) w/ Power Window:

(1) Install the rear door trim board sub-assembly (See page ED-111).

(b) w/o Power Window:

(1) Install the rear door trim board sub-assembly (See page ED-127).

3. INSTALL REAR DOOR WINDOW REGULATOR HANDLE ASSEMBLY (w/o Power Window) (See page ED-128)

4. CONNECT CABLE TO NEGATIVE BATTERY TERMINAL

Torque: 5.4 N*m (55 kgf*cm, 48 in.*lbf)

REAR SPEAKER (for Hatchback 3 Door)

COMPONENTS

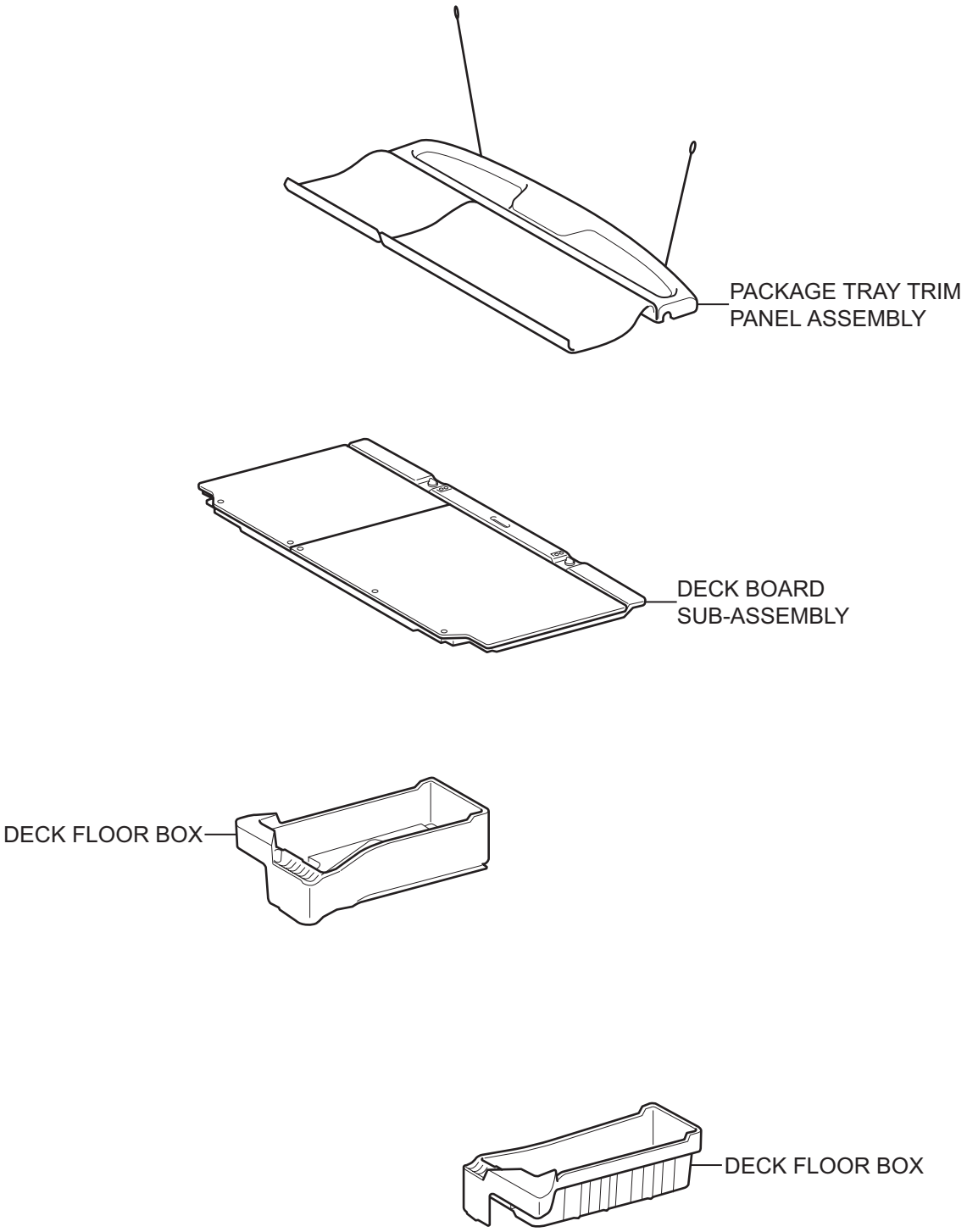

T

B127707E02

for 60/40 Split Seat Type:

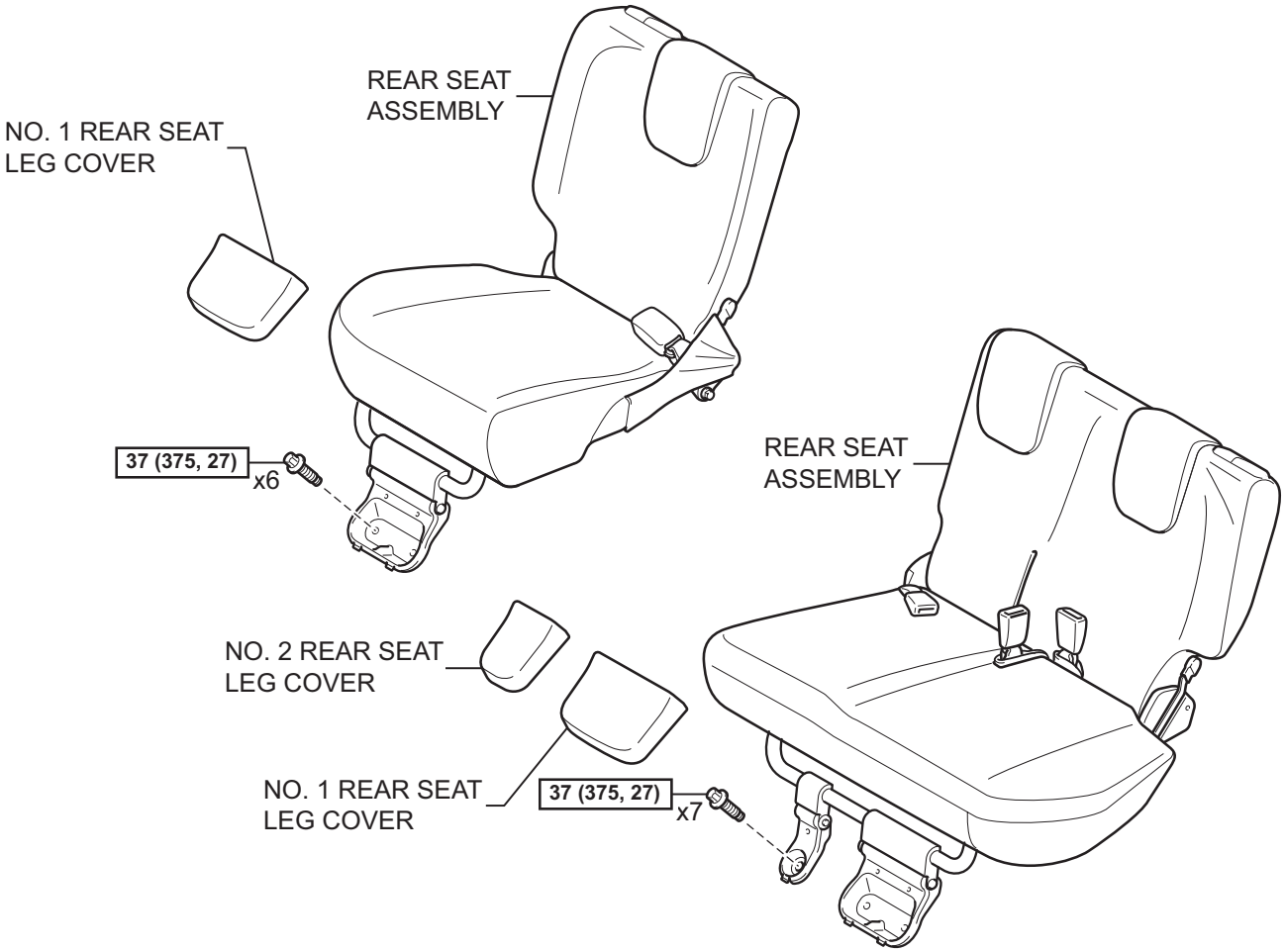

for Hold Down Seat Type:

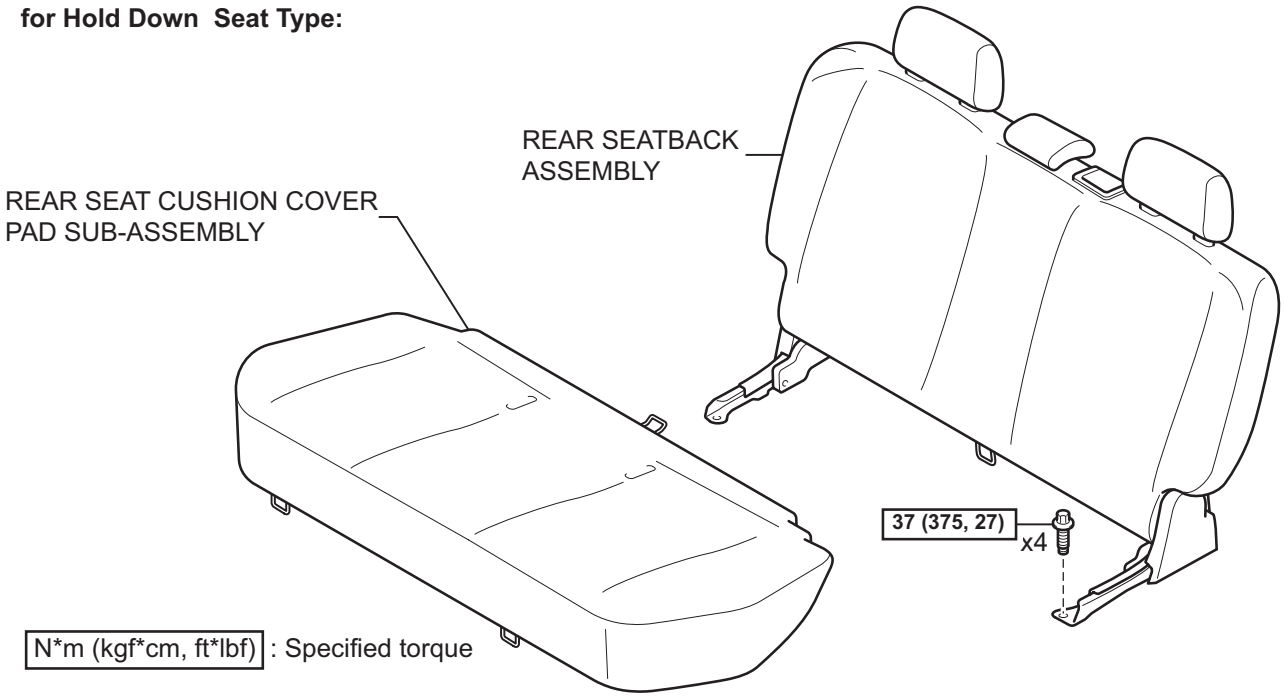

N*m (kgf*cm, ft*lbf) : Specified torque

T

B121713E05

AV

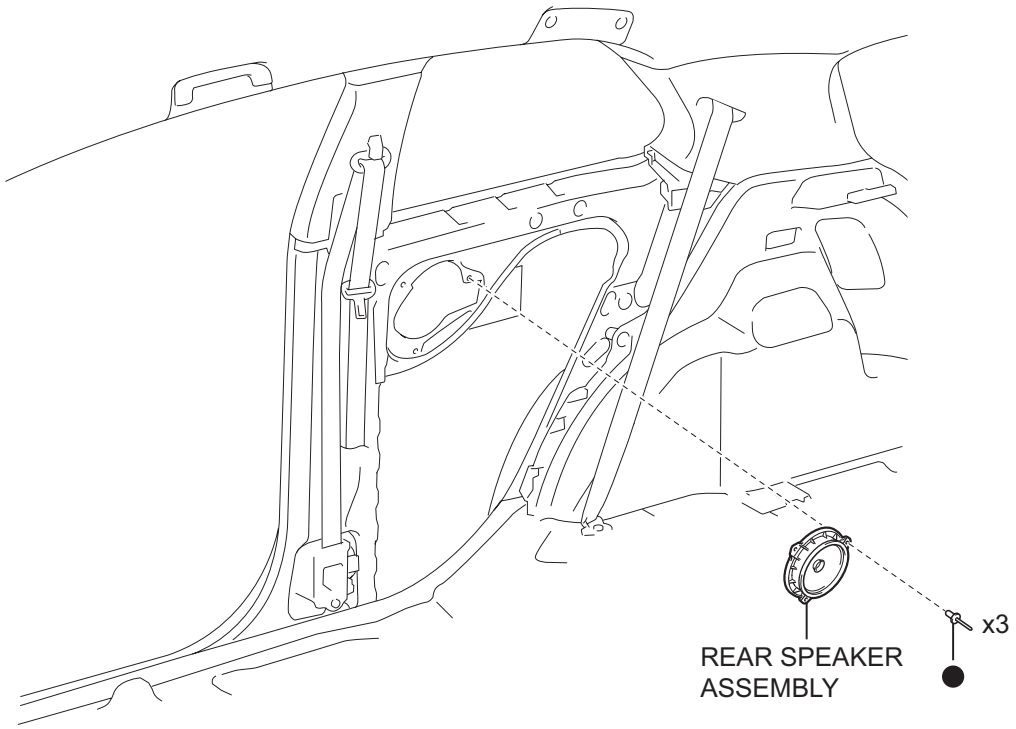

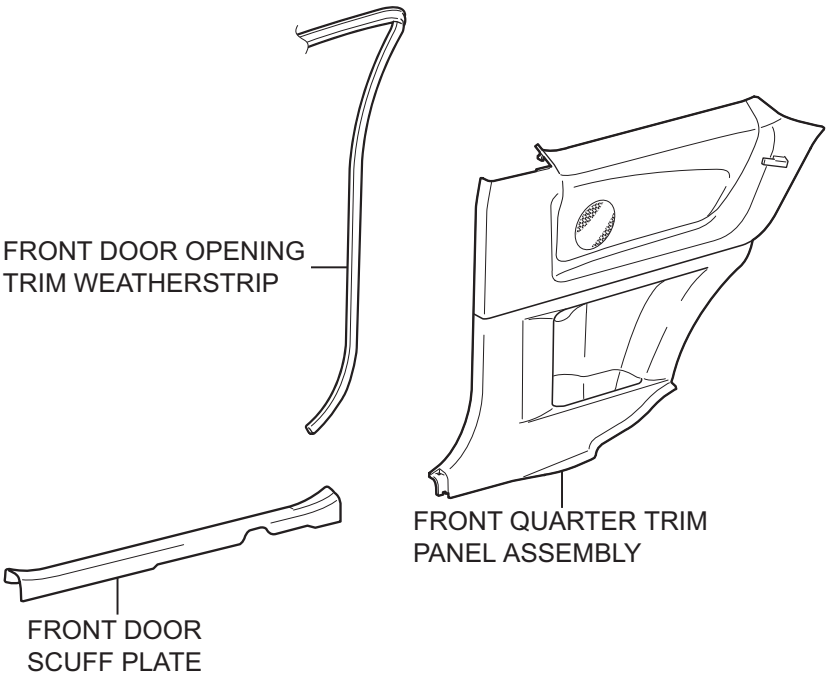

● Non-reusable part

P

B138645E01

ON-VEHICLE INSPECTION

1. INSPECT REAR SPEAKER ASSEMBLY

HINT:
Remove interior parts so that the rear speaker can be seen.

(a) Check the speaker installation.
OK:
The speaker is securely installed.
If the result is not as specified, reinstall the rear speaker.

(b) Visually check the speaker.
OK:
The cone paper of the speaker is not torn.
If the result is not as specified, replace the rear speaker.

(c) Check the speaker resistance.
(1) Disconnect the rear speaker connector.
(2) Using an ohmmeter, measure the resistance between the terminals.
Standard resistance

Tester Connection	Specified Condition
1 - 2	Approximately 4 Ω

If the result is not as specified, replace the rear speaker.

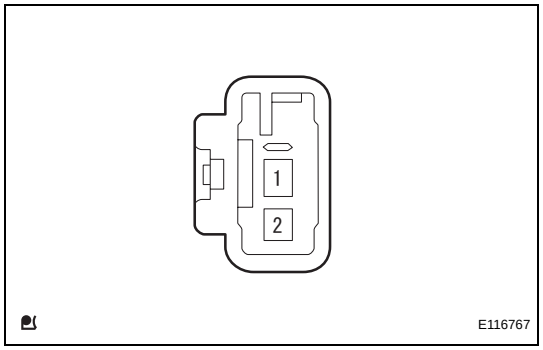

AV

REMOVAL

NOTICE:
Always use "Torx" socket wrench E10 when removing the rear seat.
HINT:
The procedure described below is for the LH side. Use the same procedure for both the RH and LH sides, unless otherwise specified.

1. **DISCONNECT CABLE FROM NEGATIVE BATTERY TERMINAL**
2. **REMOVE PACKAGE TRAY TRIM PANEL ASSEMBLY (See page IR-48)**
3. **REMOVE DECK BOARD SUB-ASSEMBLY (See page IR-48)**
4. **REMOVE DECK FLOOR BOX**
   (a) for RH Side:
      (1) Remove the deck floor box (See page IR-48).
   (b) for LH Side:
      (1) Remove the deck floor box.
      HINT:
      Use the same procedure as for the RH side.
5. **REMOVE NO. 1 REAR SEAT LEG COVER (for 60/40 Split Seat Type)**
   (a) for RH Side:
      (1) Remove the No. 1 rear seat leg cover (See pageSE-89).
   (b) for LH Side:
      (1) Remove the No. 1 rear seat leg cover (See pageSE-70).
6. **REMOVE NO. 2 REAR SEAT LEG COVER (for 60/40 Split Seat Type LH Side) (See page SE-70)**
7. **REMOVE REAR SEAT ASSEMBLY (for 60/40 Split Seat Type)**
   (a) for RH Side:
      (1) Remove the rear seat assembly (See pageSE-89)
   (b) for LH Side:
      (1) Remove the rear seat assembly (See pageSE-71)
8. **REMOVE REAR SEAT CUSHION COVER PAD SUB-ASSEMBLY (for Hold Down Seat Type) (See page SE-114)**
9. **REMOVE REAR SEATBACK ASSEMBLY (for Hold Down Seat Type) (See page SE-115)**
10. **REMOVE FRONT DOOR SCUFF PLATE (See page IR-97)**
11. **SEPARATE FRONT DOOR OPENING TRIM WEATHERSTRIP (See page SB-76)**

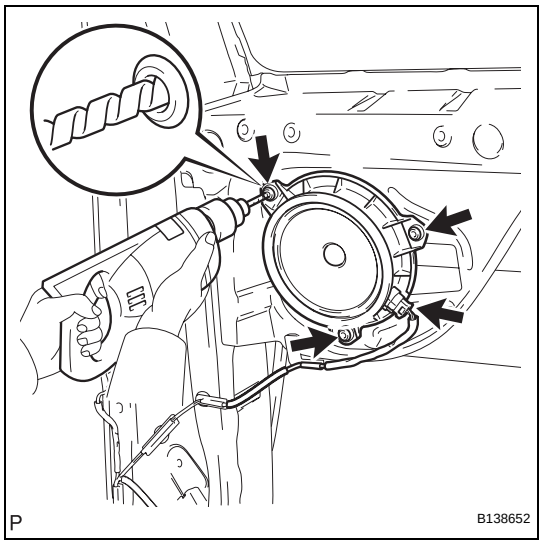

12. REMOVE FRONT QUARTER TRIM PANEL ASSEMBLY (See page IR-97)

13. REMOVE REAR SPEAKER ASSEMBLY

(a) Disconnect the speaker connector.

(b) Drill out the 3 rivet heads using a drill with a bit diameter of less than 4 mm (0.16 in.), and remove the rear speaker assembly from the quarter panel.

(c) Operate the drill around the rivet head circumference and cut out the flange.

CAUTION:

Be careful. The cut rivet is very hot.

NOTICE:

Do not drill the rivet at an angle as this will cause damage to the drill and drill hole. Line up the drill and rivet, and carefully drill the rivet head straight out.

(d) After drilling out the flange, continue drilling to push out the shards on the drill.

(e) Using a vacuum cleaner, remove the rivet fragments and shavings from the inside of the quarter panel.

INSTALLATION

NOTICE:
Always use "Torx" socket wrench E10 when installing the rear seat.
HINT:
The procedure described below is for the LH side. Use the same procedure for both the RH and LH sides, unless otherwise specified.

1. INSTALL REAR SPEAKER ASSEMBLY

(a) Engage the 2 claws of the speaker with the body and provisionally install the speaker.

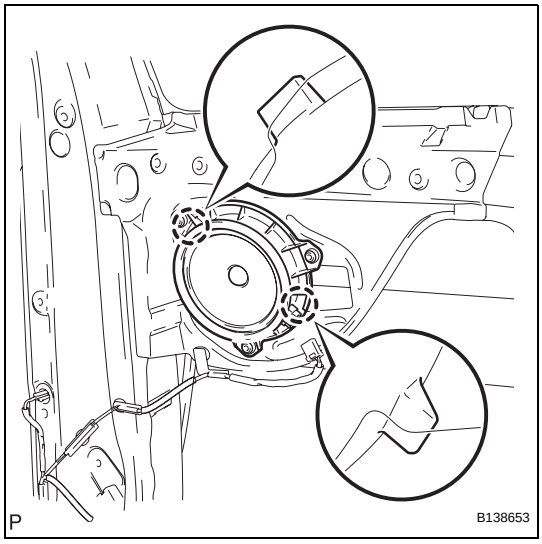

(b) Using an air riveter or hand riveter, install the rear speaker assembly onto the quarter panel with 3 new strike rivets.
HINT:
Install the new strike rivets in order as shown in the illustration.

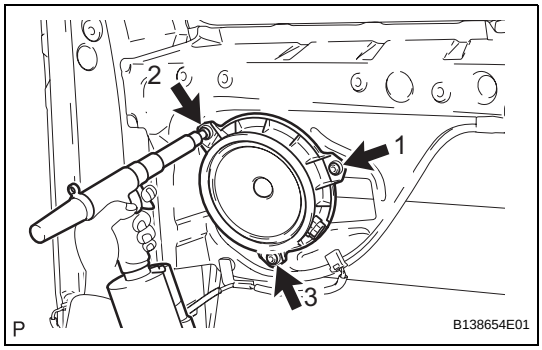

NOTICE:
- **Do not pry the rivet with the riveter, as this will cause damage to the riveter and mandrel.**

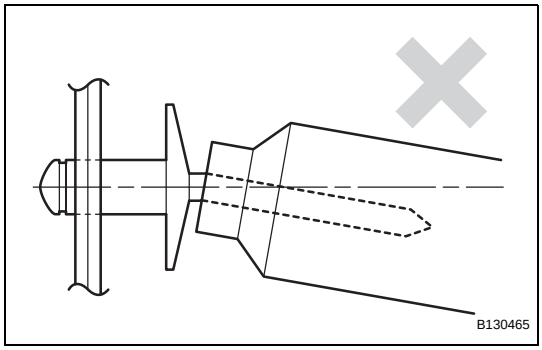

AV

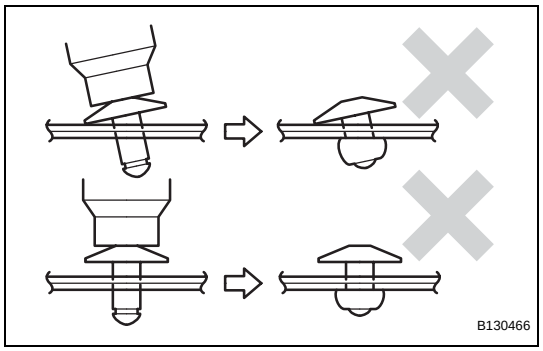

- **Confirm that the rivets are seated properly against the speaker.**
- **Do not tilt the riveter when installing the rivet onto the speaker.**
- **Do not leave any space between the rivet head and speaker.**

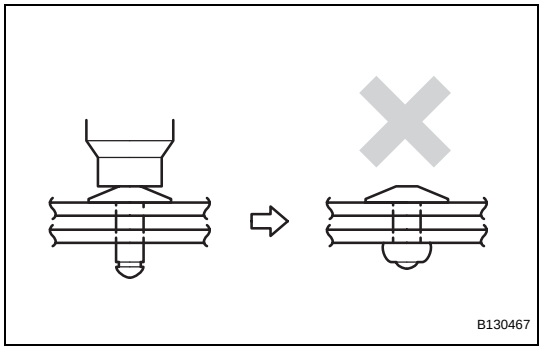

- **Do not leave any space between the speaker and door. Firmly hold the 2 items together while installing the rivet.**

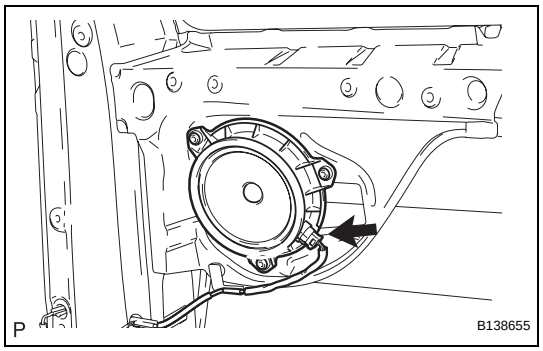

(c) Connect the speaker connector.

2. **INSTALL FRONT QUARTER TRIM PANEL ASSEMBLY (See page IR-118)**

3. **INSTALL FRONT DOOR OPENING TRIM WEATHERSTRIP (See page SB-80)**

4. **INSTALL FRONT DOOR SCUFF PLATE (See page IR-119)**

5. **INSTALL REAR SEAT ASSEMBLY (for 60/40 Split Seat Type)**
   (a) for RH Side:
      (1) Install the rear seat assembly (See pageSE-102).
   (b) for LH Side:
      (1) Install the rear seat assembly (See pageSE-84).

6. **INSTALL NO. 2 REAR SEAT LEG COVER (for 60/40 Split Seat Type) (See page SE-85)**

7. **INSTALL NO. 1 REAR SEAT LEG COVER (for 60/40 Split Seat Type)**
   (a) for RH Side:
      (1) Install the No. 1 rear seat leg cover (See pageSE-103).
   (b) for LH Side:
      (1) Install the No. 1 rear seat leg cover (See pageSE-85).

8. **INSTALL REAR SEATBACK ASSEMBLY (for Hold Down Seat Type) (See page SE-122)**

9. INSTALL REAR SEAT CUSHION COVER PAD SUB-ASSEMBLY (for Hold Down Seat Type) (See page SE-123)

10. INSTALL DECK FLOOR BOX

(a) for RH Side:

(1) Install the deck floor box (See page IR-83).

(b) for LH Side:

(1) Install the deck floor box.

HINT:

Use the same procedure as for the RH side.

11. INSTALL DECK BOARD SUB-ASSEMBLY (See page IR-83)

12. INSTALL PACKAGE TRAY TRIM PANEL ASSEMBLY (See page IR-83)

13. CONNECT CABLE TO NEGATIVE BATTERY TERMINAL

Torque: 5.4 N*m (55 kgf*cm, 48 in.*lbf)