Repair Manual

Golf 2015 ➤
Golf Variant 2015 ➤

Communication

Edition 02.2015

Protected by copyright. Copyright by Volkswagen AG. Volkswagen AG does not guarantee or accept any liability with respect to the correctness of information in this document. Copying for private or commercial purposes, in part or in whole, is not permitted unless authorised by Volkswagen AG.

List of Workshop Manual Repair Groups

Repair Group

00 - General, Technical Data

91 - Communication

Protected by copyright. Copying for private or commercial purposes, in part or in whole, is not permitted unless authorised by Volkswagen AG. Volkswagen AG does not guarantee or accept any liability with respect to the correctness of information in this document. Copyright by Volkswagen AG.

Technical information should always be available to the foremen and mechanics, because their careful and constant adherence to the instructions is essential to ensure vehicle road-worthiness and safety. In addition, the normal basic safety precautions for working on motor vehicles must, as a matter of course, be observed.

All rights reserved.
No reproduction without prior agreement from publisher.

Copyright © 2015 Volkswagen AG, Wolfsburg

D4B80416635

Contents

00 - General, Technical Data 1

1 Repair Information 1
1.1 General Repair Information 1
1.2 CAN Bus Wires Repair Information 1
1.3 Transmitted Output, Antenna Installation Locations 1

91 - Communication 3

1 Infotainment System 4
1.1 General Information- Infotainment System 4
1.2 Component Location Overview - Infotainment System 9
1.3 Infotainment System Display, Removing and Installing 12
1.4 Information Electronics Control Module 1 J794 , Removing and Installing 13

2 Sound System 14
2.1 Overview - Sound System 14
2.2 Component Location Overview - Sound System 16
2.3 Control Module/Digital Sound System Amplifier, Removing and Installing 20
2.4 Left/Right Rear Treble Speaker R14 / R16 , Removing and Installing 22
2.5 Left/Right Front Treble Speaker R20 / R22 , Removing and Installing 23
2.6 Left/Right Rear Bass Speaker R15 / R17 , Removing and Installing 24
2.7 Left/Right Front Bass Speaker R21 / R23 , Removing and Installing 25
2.8 Subwoofer R211 , Removing and Installing 26

3 Antenna Systems 28
3.1 Component Location Overview - Antenna Systems 28
3.2 AM Frequency Filter R177 , Removing and Installing 31
3.3 FM Frequency Filter in the Negative Wire R178 / FM Frequency Filter in the Positive Wire R179 , Removing and Installing 32
3.4 Antenna Module, Removing and Installing 32
3.5 Roof Antenna, Removing and Installing 35
3.6 Vehicle GPS Antennas, Removing and Installing 36

4 Radio 38
4.1 Overview - Radio 38
4.2 Radio, Removing and Installing 38

5 Telephone System 39
5.1 Cell Phone Preparation 39
5.2 Component Location Overview - Telephone System 40
5.3 Mobile Communication 2-Way Signal Amplifier J984 , Removing and Installing 42
5.4 Telephone Microphone R38 , Removing and Installing 43
5.5 Storage Compartment with Cell Phone Interface R265 , Removing and Installing 44

6 Navigation System 45
6.1 Overview - Navigation System 45
6.2 Component Location Overview - Navigation System 45
6.3 Navigation System Control Module, Removing and Installing 47
6.4 Anti-Theft Protection and GPS Control Module, Removing and Installing 48
6.5 GPS Relay J1028 , Removing and Installing 48

7 Rearview Camera System 49
7.1 System Overview - Rearview Camera 49
7.2 Component Location Overview - Rearview Camera System 49
7.3 Overview - Rearview Camera System 52
7.4 Rearview Camera R189 , Removing and Installing 52

8 Multifunction Steering Wheel 55
8.1 Overview - Multifunction Steering Wheel 55
8.2 Overview - Multifunction Steering Wheel 55

Protected by copyright. Copying for private or commercial purposes, in part or in whole, is not permitted unless authorised by Volkswagen AG. Volkswagen AG does not guarantee or accept any liability with respect to the correctness of information in this document. Copyright by Volkswagen AG.

8.3 Right/Left Multifunction Buttons On Steering Wheel E441 / E440 , Removing and Installing . . . 56
8.4 Tiptronic Downshift Button on Steering Wheel E439 / Tiptronic Upshift Button on Steering Wheel E438 , Removing and Installing . . . 58
9 Connection for External Multimedia Devices . . . 60
9.1 Overview - Connection for External Multimedia Devices . . . 60
9.2 External Audio Source Connection R199 , Removing and Installing . . . 61
9.3 USB Distributor R293 , Removing and Installing . . . 62
9.4 USB Charging Socket 1 U37 , Removing and Installing . . . 62
10 Mobile Online Services . . . 64
10.1 Overview - Mobile Online Services . . . 64
10.2 Component Location Overview - Mobile Online Services . . . 65
10.3 Control Module for Emergency Call Module and Communication Unit J949 , Removing and Installing . . . 66
11 Special Tools . . . 67
12 Revision History . . . 69

Protected by copyright. Copying for private or commercial purposes, in part or in whole, is not permitted unless authorised by Volkswagen AG. Volkswagen AG does not guarantee or accept any liability with respect to the correctness of information in this document. Copyright by Volkswagen AG.

00 – General, Technical Data

1 Repair Information

(Edition 02.2015)

⇒ "1.1 General Repair Information", page 1

⇒ "1.2 CAN Bus Wires Repair Information", page 1

⇒ "1.3 Transmitted Output, Antenna Installation Locations", page 1

1.1 General Repair Information

Electric wiring harnesses and connectors, repairing. Refer to ⇒ Electrical Information; Rep. Gr. 97 ; Connectors; Wiring Harnesses and Connectors, Repairing .

Connector housings, releasing and disassembling. Refer to ⇒ Electrical Equipment; Rep. Gr. 97 ; Connectors; Wiring Harnesses and Connectors, Repairing .

Antenna wires, repairing. Refer to ⇒ Electrical Equipment; Rep. Gr. 97 ; Antenna Wires, Repairing .

Fiber-optic cable, repairing. Refer to ⇒ Electrical Equipment; Rep. Gr. 97 ; Fiber-Optic Cable .

Vehicle Diagnostic Testers . Refer to ⇒ Electrical Equipment; Rep. Gr. 97 ; Vehicle Diagnostic Testers .

1.2 CAN Bus Wires Repair Information

CAN Bus lines, repairing. Refer to ⇒ Electrical Equipment; Rep. Gr. 97 ; Connectors; Wiring Harnesses and Connectors, Repairing .

1.3 Transmitted Output, Antenna Installation Locations

Note

It is legally forbidden to install antennas on bumpers. This protects pedestrians.

Designation	Pmax/Watt	Prescribed Antenna Installation Locations
Shortwave < 54 MHz	100 (PEAK) [1].	All locations on the roof
4 m band	20 (eff.) [2].	All locations (on vehicle exterior)
2 m band	20 (eff.)	Front fender Roof center front Roof center Roof center rear
2 m band	50 (eff.)	Center of roof Rear center of roof
70 cm band	50 (eff.)	Front center of roof Center of roof Rear center of roof
23 cm band	20 (eff.)	All locations (on vehicle exterior)

Protected by copyright. Copying for private or commercial purposes, in part or in whole, is not permitted unless authorised by Volkswagen AG. Volkswagen AG does not guarantee or accept any liability with respect to the correctness of information in this document. Copyright by Volkswagen AG.

Designation	Pmax/Watt	Prescribed Antenna Installation Locations
TETRA TETRAPOL	25 (eff.)	All locations (on vehicle exterior)
D-net GSM 900	20 (PEAK)	All locations (on vehicle exterior)
E-net GSM 1800 GSM 1900 UMTS	10 (PEAK)	All locations (on vehicle exterior)

1) PEAK = max. carrier power (Peak Envelope Power)

2) eff. = effective transmission output

Deviations from these guidelines (location of antenna, frequency, output) are only permitted in special isolated cases after a single-case test carried out by the EMV center of VW AG in Wolfsburg.

Note

EMV = electromagnetic compatibility

Protected by copyright. Copying for private or commercial purposes, in part or in whole, is not permitted unless authorised by Volkswagen AG. Volkswagen AG does not guarantee or accept any liability with respect to the correctness of information in this document. Copyright by Volkswagen AG.

91 – Communication

Protected by copyright. Copying for private or commercial purposes, in part or in whole, is not permitted unless authorised by Volkswagen AG. Volkswagen AG does not guarantee or accept any liability with respect to the correctness of information in this document. Copyright by Volkswagen AG.

1 Infotainment System

⇒ “1.1 General Information- Infotainment System”, page 4

⇒ “1.2 Component Location Overview - Infotainment System”, page 9

⇒ “1.3 Infotainment System Display, Removing and Installing”, page 12

⇒ “1.4 Information Electronics Control Module 1 J794 , Removing and Installing”, page 13

1.1 General Information- Infotainment System

⇒ “1.1.1 General Information - Infotainment System, Composition Media (I8D) and Discover Media (7UF)”, page 4

⇒ “1.1.2 General Information - Infotainment System, Discover Pro (7UG)”, page 7

1.1.1 General Information - Infotainment System, Composition Media (I8D) and Discover Media (7UF)

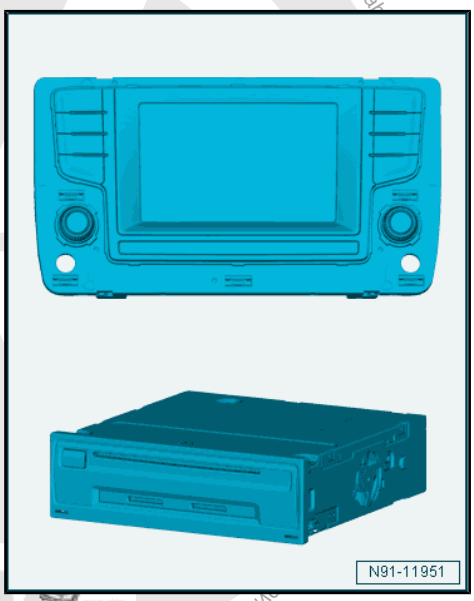

Information Electronics Control Module 1 - J794- / Front Information Display Control Head - J685-

Infotainment System Composition Media (I8D) Characteristics

- 5.8 inch multicolor display with touch screen (towing recognition)
- 4 x 20 W output
- RDS FM/AM radio
- Integrated SDARS turner for North America and Canada
- Integrated diversity function
- SD card reader with one SD card slot
- CD player
- Connection for external multimedia devices
- AUX IN connection in storage compartment
- USB connection in storage compartment
- iPod connection in storage compartment
- AAC
- MP3-Play back function
- WMA
- Multifunction steering wheel support
- Vehicle menu support
- OBD including speaker diagnosis
- Bluetooth® hands-free calling
- Speed compensated volume (SCV)
- Speed dependent dynamic range compression (GADK)
- CVBS connection of rearview camera
- Voice control

Protected by copyright. Copying for private or commercial purposes, in part or in whole, is not permitted unless authorised by Volkswagen AG. Volkswagen AG does not guarantee or accept any liability with respect to the correctness of information in this document. Copyright by Volkswagen AG.

Infotainment System Discover Media (7UF) Characteristics

Additional characteristics for infotainment system composition media

- Navigation system with GPS satellite receiver
- SD card reader with two SD card slots
- A SD card slot for navigation data

Infotainment System Overview

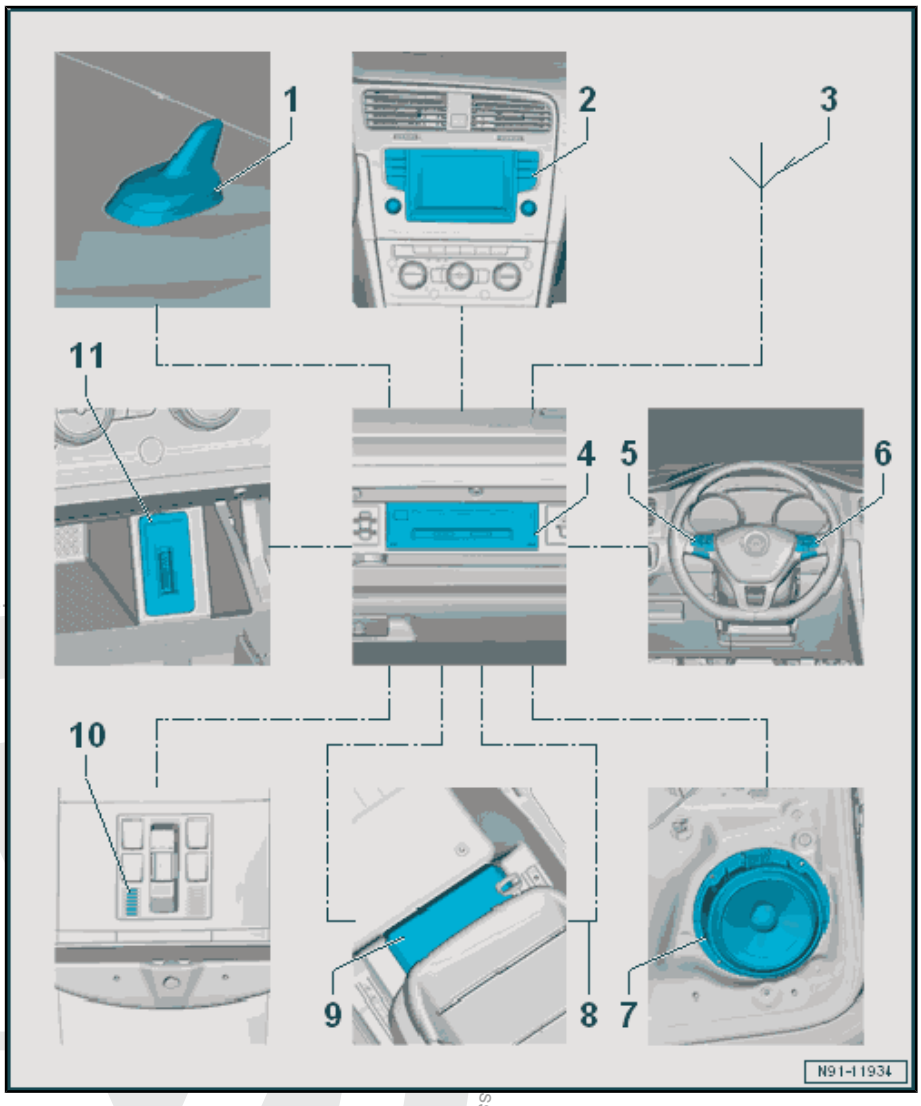

1 - Roof Antenna - RX5-

- ❑ For more information. Refer to ⇒ “3.1 Component Location Overview - Antenna Systems”, page 28

2 - Front Information Display Control Head - J685-

- ❑ For more information. Refer to ⇒ “1.2 Component Location Overview - Infotainment System”, page 9

3 - Rear Window Antennas

- ❑ For more information. Refer to ⇒ “3.1 Component Location Overview - Antenna Systems”, page 28

4 - Information Electronics Control Module 1 - J794-

- ❑ For more information. Refer to ⇒ “1.2 Component Location Overview - Infotainment System”, page 9

5 - Left Multifunction Buttons On Steering Wheel - E440-

- ❑ For more information. Refer to ⇒ “8.2 Overview - Multifunction Steering Wheel”, page 55

6 - Right Multifunction Buttons On Steering Wheel - E441-

- ❑ For more information. Refer to ⇒ “8.2 Overview - Multifunction Steering Wheel”, page 55

7 - Sound System

- ❑ For more information. Refer to ⇒ “2.2 Component Location Overview - Sound System”, page 16

8 - MOST Bus

9 - Digital Sound System Control Module - J525-

- ❑ For more information. Refer to ⇒ “2.2 Component Location Overview - Sound System”, page 16

10 - Telephone Microphone - R38-

- ❑ For more information. Refer to ⇒ “5.2 Component Location Overview - Telephone System”, page 40

Protected by copyright. Copying for private or commercial purposes, in part or in whole, is not permitted unless authorised by Volkswagen AG. Copyright by Volkswagen AG.

11 - Connection for External Multimedia Devices

❑ For more information. Refer to
⇒ “9.1 Overview - Connection for External Multimedia Devices”, page 60

Familiarity with the function and operation of the infotainment system is needed if there are customer concerns. Additional information may be found in the Owner's Manual.

The connection to other vehicle systems takes place via the Infotainment CAN Bus and the Data Bus On Board Diagnostic Interface - J533- .

Fault finding is performed via `Guided Fault Finding` on the Vehicle Diagnostic Tester .

Notes on MOST Bus

The optical Data Bus “MOST Bus” is used in addition to the CAN Bus.

A fiber-optic cable is used as a “connecting cable”. Fiber optic cables are routed inside corrugated tubes for protection.

Replace complete fiber optic cable if possible.

The front surface of the connectors must not be dirty.

If disconnecting the connectors: Attach Fiber-Optic Repair Set - Connector Protective Caps - VAS6223/9- .

When installing fiber optic cables, make sure not to go below the minimum bending radius of 25 mm. Do not crush or kink fiber optic cables.

Fiber-optic cable, repairing. Refer to
⇒ “1.1 General Repair Information”, page 1 .

Protected by copyright. Copying for private or commercial purposes, in part or in whole, is not permitted unless authorised by Volkswagen AG. Volkswagen AG does not guarantee or accept any liability with respect to the correctness of information in this document. Copyright by Volkswagen AG.

1.1.2 General Information - Infotainment System, Discover Pro (7UG)

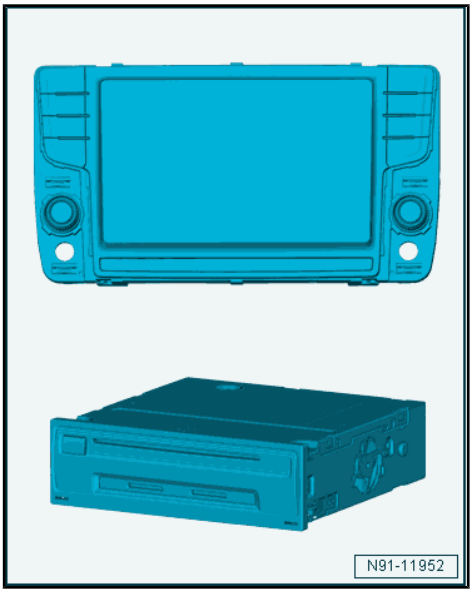

Information Electronics Control Module 1 - J794- / Front Information Display Control Head - J685-

Infotainment System Discover Pro (7UG) Characteristics

- 8 inch multicolor display with touch screen (towing recognition)
- 4 x 20 W + 2 x 35 W output
- RDS FM/AM radio
- Integrated SDARS tuner
- Integrated diversity function
- 3D navigation system with GPS satellite receiver
- SD card reader with two SD card slots
- CD/DVD player
- Connection for external multimedia devices
- AUX IN connection in storage compartment
- USB connection in storage compartment
- iPod connection in storage compartment
- AAC
- AV output
- MP3-Play back function
- WMA
- JPEG viewer
- WLAN internal
- UMTS
- Multifunction steering wheel support
- Vehicle menu support
- OBD including speaker diagnosis
- Bluetooth® hands-free calling
- Voice control
- Speed compensated volume (SCV)
- Speed dependent dynamic range compression (GADK)
- CVBS connection of rearview camera

Available as option (Car Net)

- Google navigation
- Google street view
- POI online
- Google search

Infotainment System Overview

Protected by copyright. Copying for private or commercial purposes, in part or in whole, is not permitted unless authorised by Volkswagen AG. Volkswagen AG does not guarantee or accept any liability with respect to the correctness of information in this document. Copyright by Volkswagen AG.

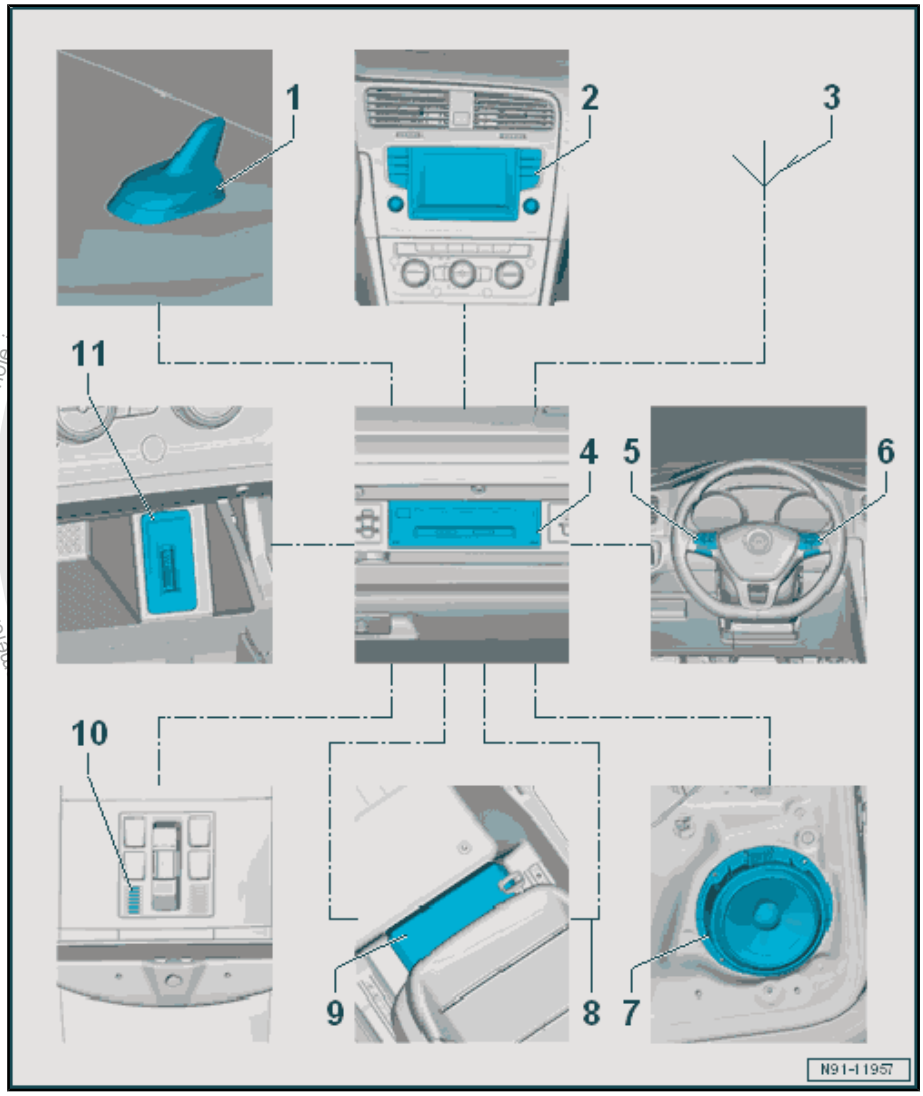

1 - Roof Antenna - RX5-

- For more information. Refer to ⇒ “3.1 Component Location Overview - Antenna Systems”, page 28

2 - Front Information Display Control Head - J685-

- For more information. Refer to ⇒ “1.2 Component Location Overview - Infotainment System”, page 9

3 - Rear Window Antennas

- For more information. Refer to ⇒ “3.1 Component Location Overview - Antenna Systems”, page 28

4 - Information Electronics Control Module 1 - J794-

- For more information. Refer to ⇒ “1.2 Component Location Overview - Infotainment System”, page 9

5 - Left Multifunction Buttons On Steering Wheel - E440-

- For more information. Refer to ⇒ “8.2 Overview - Multifunction Steering Wheel”, page 55

6 - Right Multifunction Buttons On Steering Wheel - E441-

- For more information. Refer to ⇒ “8.2 Overview - Multifunction Steering Wheel”, page 55

7 - Sound System

- For more information. Refer to ⇒ “2.2 Component Location Overview - Sound System”, page 16

8 - MOST Bus

9 - Digital Sound System Control Module - J525-

- For more information. Refer to ⇒ “2.2 Component Location Overview - Sound System”, page 16

10 - Telephone Microphone - R38-

- For more information. Refer to ⇒ “5.2 Component Location Overview - Telephone System”, page 40

11 - Connection for External Multimedia Devices

- For more information. Refer to ⇒ “9.1 Overview - Connection for External Multimedia Devices”, page 60

Familiarity with the function and operation of the Infotainment system is needed if there are customer concerns. Additional information may be found in the Owner's Manual.

The connection to other vehicle systems takes place via the Infotainment CAN Bus and the Data Bus On Board Diagnostic Interface - J533- .

Fault finding is performed via `Guided Fault Finding` on the Vehicle Diagnostic Tester .

Notes on MOST Bus

The optical Data Bus “MOST Bus” is used in addition to the CAN Bus.

A fiber-optic cable is used as a “connecting cable”. Fiber optic cables are routed inside corrugated tubes for protection.

Replace complete fiber optic cable if possible.

The front surface of the connectors must not be dirty.

If disconnecting the connectors: Attach Fiber-Optic Repair Set - Connector Protective Caps - VAS6223/9- .

When installing fiber optic cables, make sure not to go below the minimum bending radius of 25 mm. Do not crush or kink fiber optic cables.

Fiber-optic cable, repairing. Refer to
⇒ “1.1 General Repair Information”, page 1 .

1.2 Component Location Overview - Infotainment System

⇒ “1.2.1 Component Location Overview - Infotainment System, Sedan”, page 9

⇒ “1.2.2 Component Location Overview - Infotainment System, Wagon”, page 11

1.2.1 Component Location Overview - Infotainment System, Sedan

Protected by copyright. Copying for private or commercial purposes, in part or in whole, is not permitted unless authorised by Volkswagen AG. Volkswagen AG does not guarantee or accept any liability with respect to the correctness of information in this document. Copyright by Volkswagen AG.

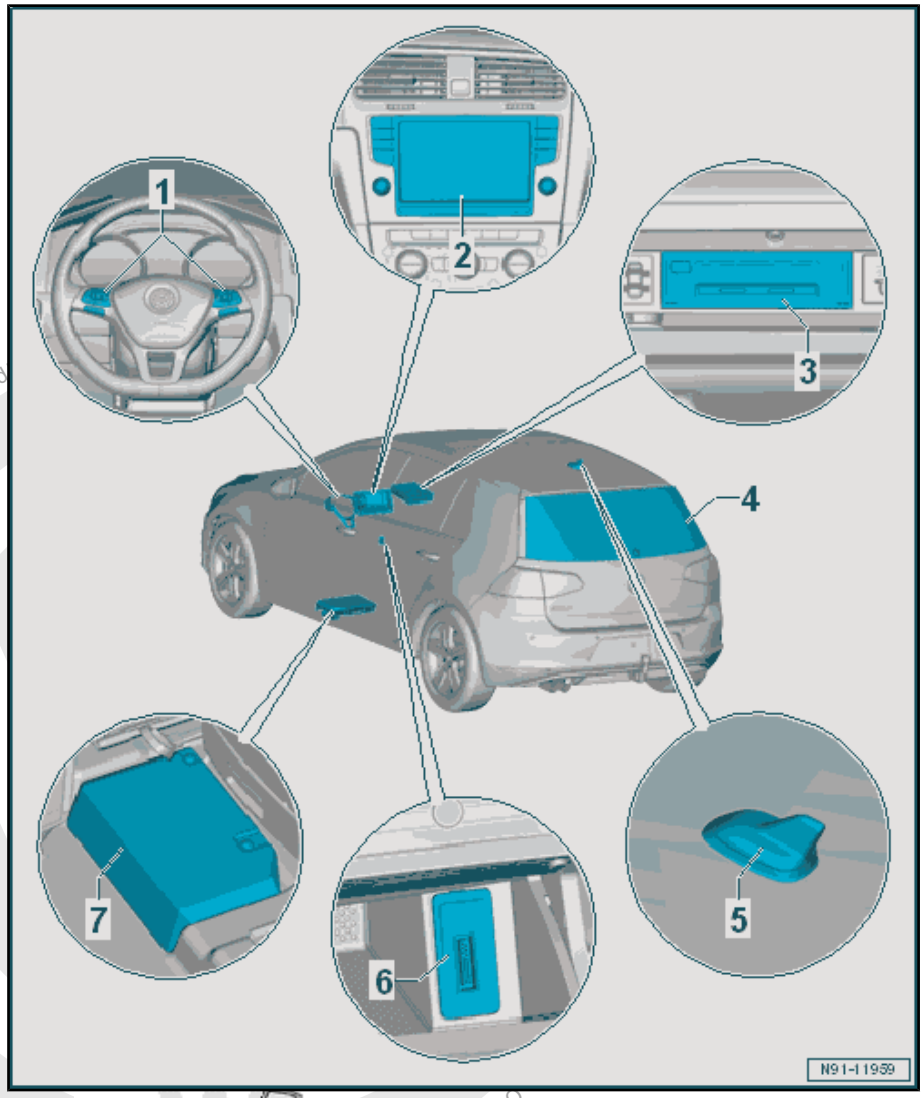

1 - Multifunction Buttons in Steering Wheel

- ❑ Left Multifunction Buttons On Steering Wheel - E440-
- ❑ Right Multifunction Buttons On Steering Wheel - E441-
- ❑ Removing and installing. Refer to ⇒ “8.3 Right/Left Multifunction Buttons On Steering Wheel E441 / E440 , Removing and Installing”, page 56 .

2 - Front Information Display Control Head - J685-

- ❑ Inside the center of the instrument panel
- ❑ Removing and installing. Refer to ⇒ “1.3 Infotainment System Display, Removing and Installing”, page 12 .

3 - Information Electronics Control Module 1 - J794-

- ❑ In the glove compartment
- ❑ Connector assignment. Refer to ⇒ Wiring diagrams, Troubleshooting & Component locations.
- ❑ Removing and installing. Refer to ⇒ “1.4 Information Electronics Control Module 1 J794 , Removing and Installing”, page 13 .

4 - Rear Window Antennas

5 - Roof Antenna - RX5-

- ❑ Removing and installing. Refer to ⇒ “3.5.1 Roof Antenna, Removing and Installing, Sedan”, page 35 .

6 - Connection for External Multimedia Devices

- ❑ In the front center console storage compartment
- ❑ Removing and installing. Refer to ⇒ “9.2 External Audio Source Connection R199 , Removing and Installing”, page 61 .

7 - Digital Sound System Control Module - J525-

- ❑ Under the left front seat
- ❑ Connector assignment. Refer to ⇒ Wiring diagrams, Troubleshooting & Component locations.
- ❑ Removing and installing. Refer to ⇒ “2.3 Control Module/Digital Sound System Amplifier, Removing and Installing”, page 20 .

Protected by copyright. Copying for private or commercial purposes, in part or in whole, is not permitted unless authorised. Copyright by Volkswagen AG.

1.2.2 Component Location Overview - Infotainment System, Wagon

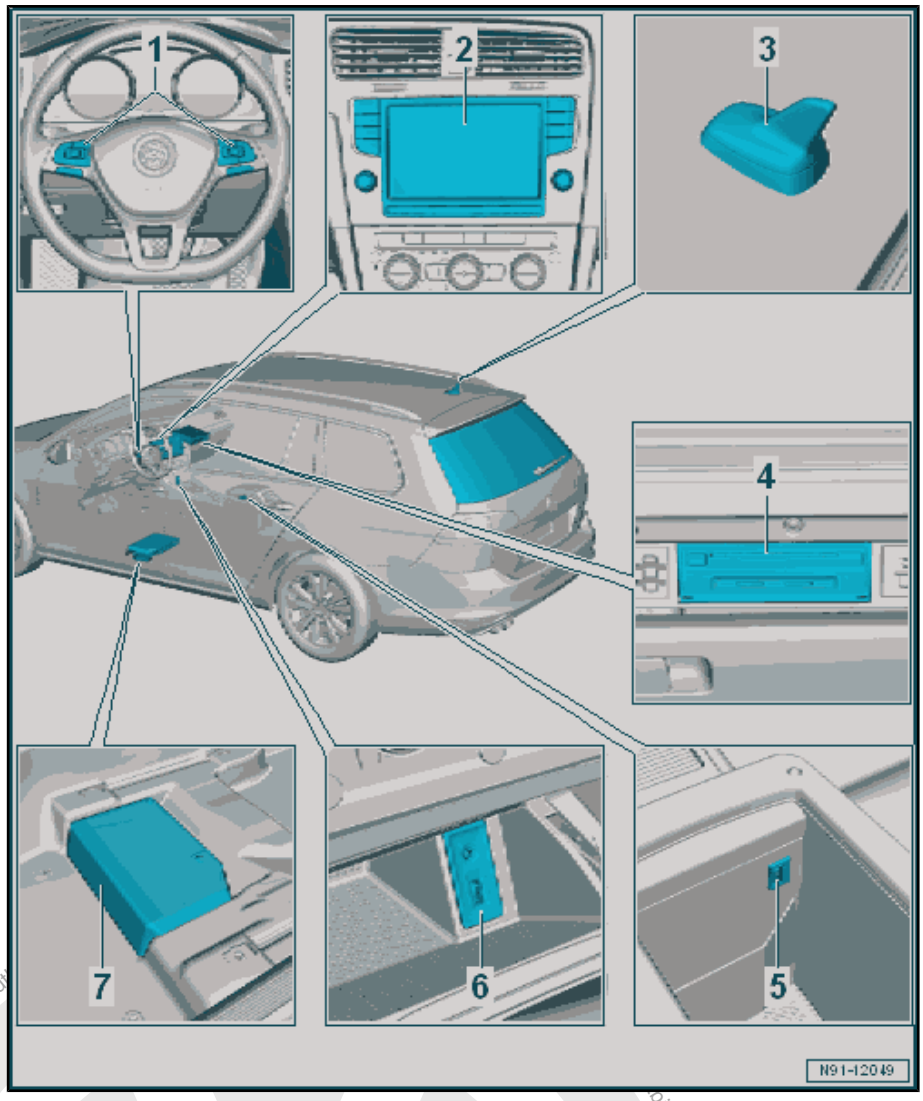

1 - Multifunction Buttons in Steering Wheel

- ❑ Left Multifunction Buttons On Steering Wheel - E440-
- ❑ Right Multifunction Buttons On Steering Wheel - E441-
- ❑ Removing and installing. Refer to ⇒ “8.3 Right/Left Multifunction Buttons On Steering Wheel E441 / E440 , Removing and Installing”, page 56 .

2 - Front Information Display Control Head - J685-

- ❑ Inside the center of the instrument panel
- ❑ Removing and installing. Refer to ⇒ “1.3 Infotainment System Display, Removing and Installing”, page 12 .

3 - Roof Antenna - RX5-

- ❑ Removing and installing. Refer to ⇒ “3.5.1 Roof Antenna, Removing and Installing, Sedan”, page 35 .

4 - Information Electronics Control Module 1 - J794-

- ❑ In the glove compartment
- ❑ Connector assignment. Refer to ⇒ Wiring diagrams, Troubleshooting & Component locations.
- ❑ Removing and installing. Refer to ⇒ “1.4 Information Electronics Control Module 1 J794 , Removing and Installing”, page 13 .

5 - USB Charging Socket 1 - U37-

- ❑ In the front armrest storage compartment
- ❑ Removing and installing. Refer to ⇒ “9.4 USB Charging Socket 1 U37 , Removing and Installing”, page 62 .

6 - Connection for External Multimedia Devices

- ❑ In the front center console storage compartment
- ❑ Removing and installing. Refer to ⇒ “9.2.2 External Audio Source Connection R199 , Removing and Installing”, page 61 .

7 - Digital Sound System Control Module - J525-

- ❑ Under the left front seat
- ❑ Connector assignment. Refer to ⇒ Wiring diagrams, Troubleshooting & Component locations.
- ❑ Removing and installing. Refer to ⇒ “2.3 Control Module/Digital Sound System Amplifier, Removing and Installing”, page 20 .

Protected by copyright. Copyright by Volkswagen AG.

1.3 Infotainment System Display, Removing and Installing

Special tools and workshop equipment required

- Trim Removal Wedge - 3409-
- Radio Removal Tool - T10057-

Removing

– Turn off the ignition and all electrical equipment.

– Remove the ignition key, if equipped.

> **Caution**
>
> *Risk of damaging the component surfaces.*
>
> - *When positioning a prying tool, put commercially available adhesive tape over the component in the visible area.*

– Remove the instrument panel center trim (together with the center vent). Refer to ⇒ Body Interior; Rep. Gr. 70 ; Instrument Panel; Instrument Panel Vent, Removing and Installing .

– Insert the Radio Removal Tool - T10057- into the release slots -1- on the Front Information Display Control Head - J685- .

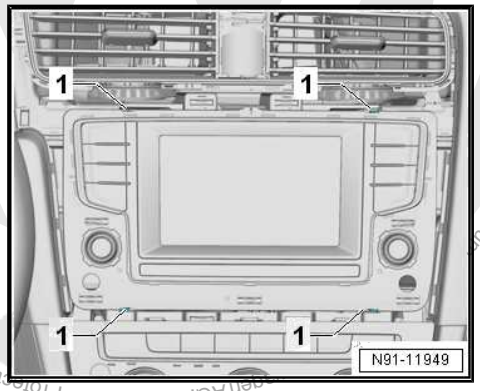

– Release the upper locking mechanisms -1- by pushing in direction of travel.

– Release the lower locking mechanisms -1- by pushing in direction of travel.

– Remove the Front Information Display Control Head - J685- -2-.

– Release and disconnect the connectors.

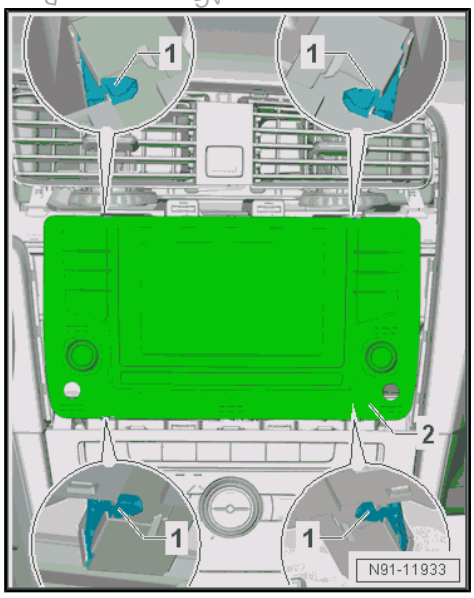

Installing

Install in reverse order of removal. Note the following:

> **Caution**
>
> *Risk of damaging the components.*
>
> - *When inserting the Front Information Display Control Head - J685- , do not push on the display and the control equipment.*

– Install the Front Information Display Control Head - J685- until it engages.

Protected by copyright. Copying for private or commercial purposes, in part or in whole, is not permitted unless authorised by Volkswagen AG. Volkswagen AG does not guarantee or accept any liability with respect to the correctness of information in this document.

1.4 Information Electronics Control Module 1 - J794- , Removing and Installing

Special tools and workshop equipment required

- Radio Removal Tool - T10057-
- Fiber-Optic Repair Set - Connector Protective Caps - VAS6223/9-

If the control module is replaced, select the `Replacement` function for the appropriate control module in `Guided Fault Finding` using the Vehicle Diagnostic Tester .

Removing

– Open the glove compartment.

– Remove any data storage device still in the Information Electronics Control Module 1 - J794- .

– Turn off the ignition and all electrical equipment.

– Remove the ignition key, if equipped.

– Insert the two clips from the Radio Removal Tool - T10057- into the slits in the Information Electronics Control Module 1 - J794- -1- until they lock into place.

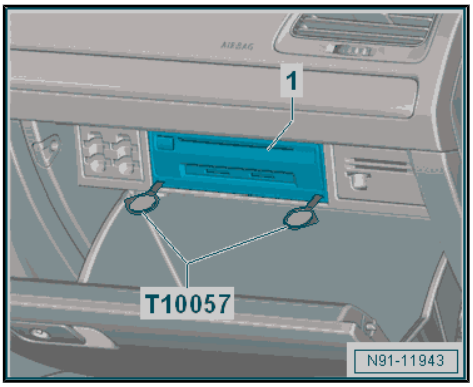

The points on grip eyes must face outward.

– Remove the Information Electronics Control Module 1 - J794- -1- from the glove compartment at the Radio Removal Tool - T10057- grip eyes.

– Release and disconnect the connectors from the Information Electronics Control Module 1 - J794- -1-.

Equipment Levels with MOST Bus

– Insert the Fiber-Optic Repair Set - Connector Protective Caps - VAS6223/9- -1- onto the MOST Bus connector -2-.

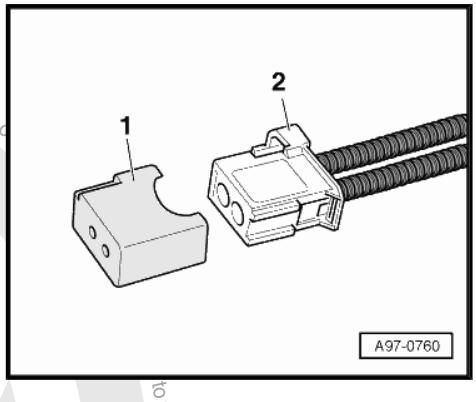

All Equipment Levels

– Press the locking tabs on the Information Electronics Control Module 1 - J794- and remove the Radio Removal Tool - T10057- .

Installing

Install in reverse order of removal. Note the following:

– Insert the Information Electronics Control Module 1 - J794- until it engages in the glove compartment.

Protected by copyright. Copying for private or commercial purposes, in part or in whole, is not permitted unless authorised by Volkswagen AG. Volkswagen AG does not guarantee or accept any liability with respect to the correctness of information in this document. Copyright by Volkswagen AG.

2 Sound System

⇒ “2.1 Overview - Sound System”, page 14

⇒ “2.2 Component Location Overview - Sound System”, page 16

⇒ “2.3 Control Module/Digital Sound System Amplifier, Removing and Installing”, page 20

⇒ “2.4 Left/Right Rear Treble Speaker R14 / R16 , Removing and Installing”, page 22

⇒ “2.5 Left/Right Front Treble Speaker R20 / R22 , Removing and Installing”, page 23

⇒ “2.6 Left/Right Rear Bass Speaker R15 / R17 , Removing and Installing”, page 24

⇒ “2.7 Left/Right Front Bass Speaker R21 / R23 , Removing and Installing”, page 25

⇒ “2.8 Subwoofer R211 , Removing and Installing”, page 26

2.1 Overview - Sound System

⇒ “2.1.1 Overview - Sound System, 8 Speakers, 8RM”, page 14

⇒ “2.1.2 Overview - Sound System, Branded Sound, 8RU”, page 15

2.1.1 Overview - Sound System, 8 Speakers, 8RM

Protected by copyright. Copying for private or commercial purposes, in part or in whole, is not permitted unless authorised by Volkswagen AG. Volkswagen AG does not guarantee or accept any liability with respect to the correctness of information in this document. Copyright by Volkswagen AG.

1 - Radio - R- / Information Electronics Control Module 1 - J794-

2 - LF Wires

3 - Right Front Bass Speaker - R23- in the Right Front Door

4 - Right Front Treble Speaker - R22- in A-Pillar Right Upper Trim Panel

5 - Right Rear Treble Speaker - R16- in the Right Side Trim Panel (2-Door)/Right Rear Door Trim Panel (4-Door)

6 - Right Rear Bass Speaker - R17- in the Right Sidewall (2-Door)/Rear Door (4-Door)

7 - Left Rear Bass Speaker - R15- in the Left Sidewall (2-Door)/Rear Door (4-Door)

8 - Left Rear Treble Speaker - R14- in the Left Side Trim Panel (2-Door)/Left Rear Door Trim Panel (4-Door)

9 - Left Front Treble Speaker - R20- in the A-Pillar Left Upper Trim Panel

10 - Left Front Bass Speaker - R21- in the Left Front Door

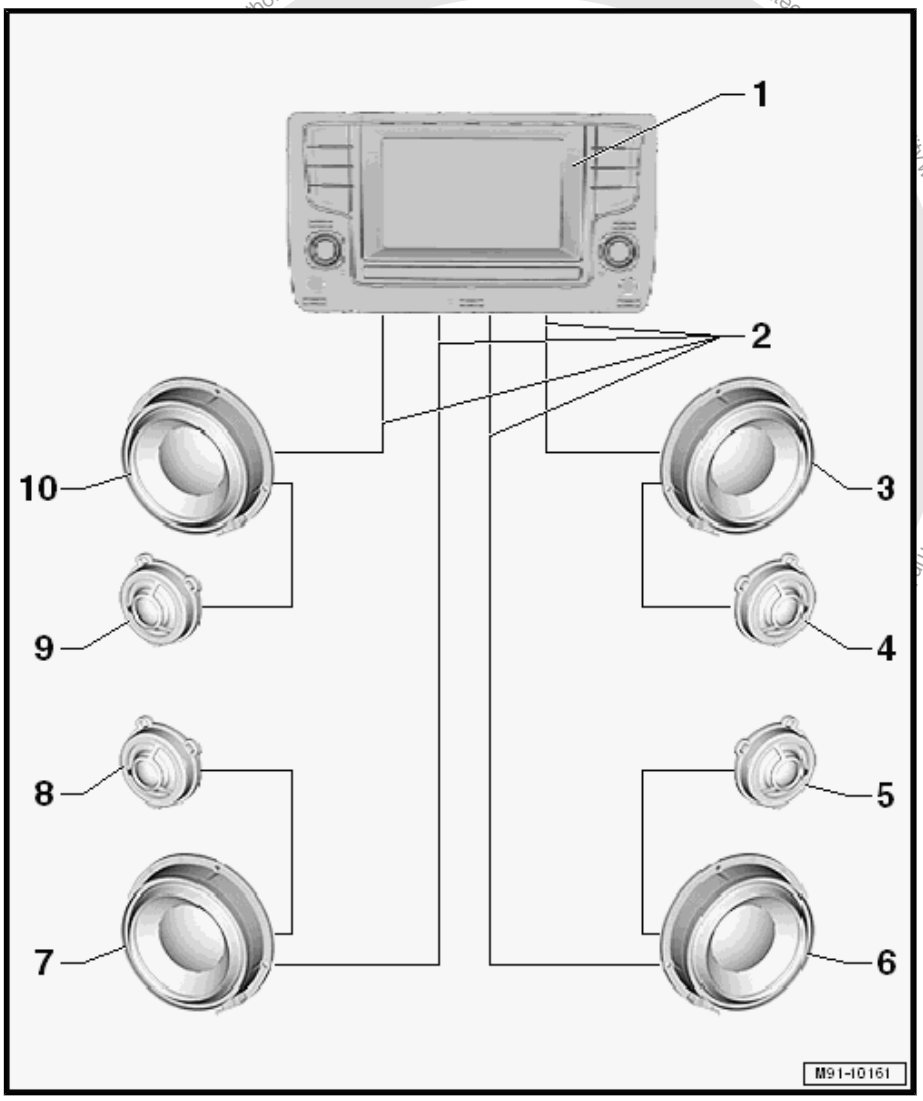

2.1.2 Overview - Sound System, Branded Sound, 8RU

High quality speaker systems are installed with a branded sound system. The branded sound system can be identified by a name badge on the front treble speaker trim. A Subwoofer - R211- is installed in the spare tire well in the luggage compartment. A Digital Sound System Control Module - J525- is installed under the left front seat.

1 - Radio - R- / Information Electronics Control Module 1 - J794-

2 - MOST Bus

3 - Right Front Bass Speaker - R23- in the Right Front Door

4 - Right Front Treble Speaker - R22- in A-Pillar Right Upper Trim Panel

5 - Right Rear Treble Speaker - R16- in the Right Side Trim Panel (2-Door)/Right Rear Door Trim Panel (4-Door)

6 - Right Rear Bass Speaker - R17- in the Right Sidewall (2-Door)/Rear Door (4-Door)

7 - Digital Sound System Control Module - J525- under the Left Front Seat

8 - Subwoofer - R211- in the Spare Tire Well

9 - Left Rear Bass Speaker - R15- in the Left Sidewall (2-Door)/Rear Door (4-Door)

10 - Left Rear Treble Speaker - R14- in the Left Side Trim Panel (2-Door)/Left Rear Door Trim Panel (4-Door)

11 - Left Front Treble Speaker - R20- in the A-Pillar Left Upper Trim Panel

12 - Left Front Bass Speaker - R21- in the Left Front Door

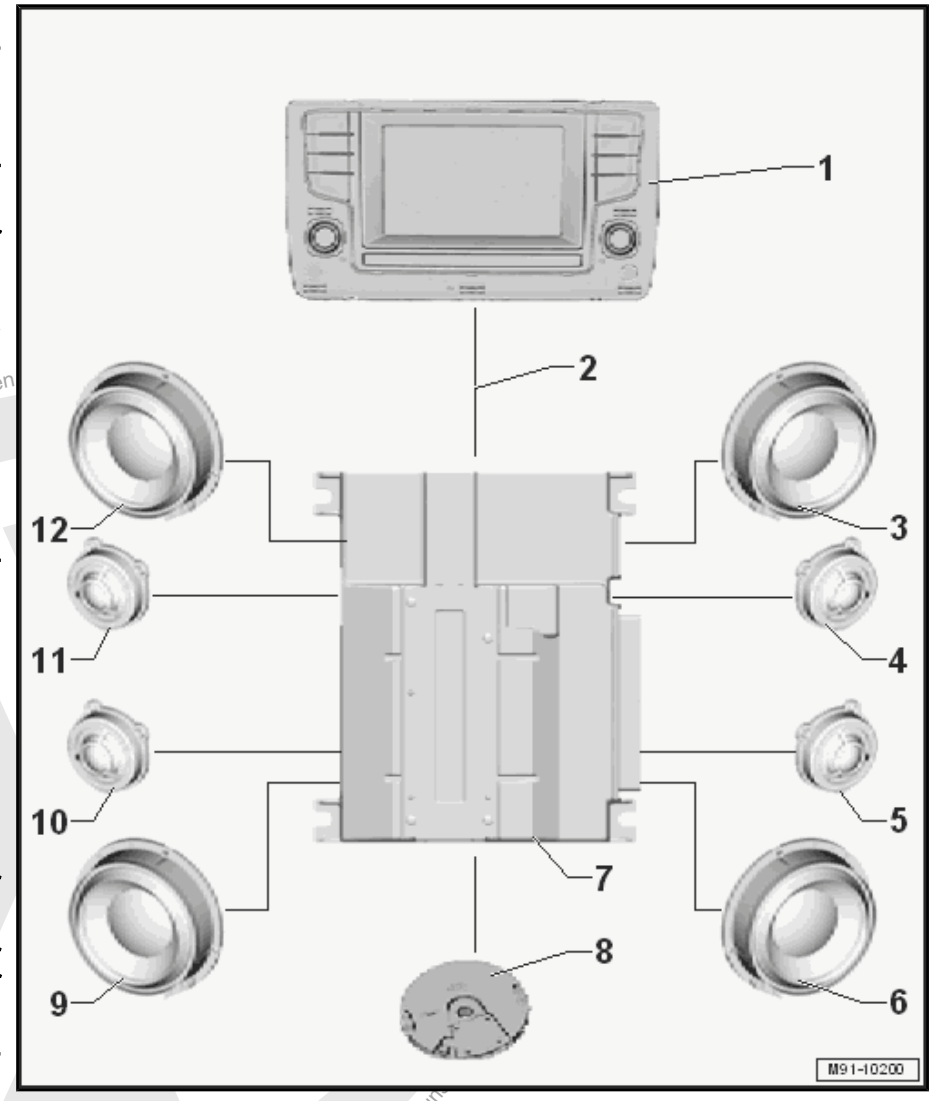

2.2 Component Location Overview - Sound System

⇒ “2.2.1 Component Location Overview - Sound System, 8 Speakers, 8RM”, page 16

⇒ “2.2.2 Component Location Overview - Sound System, Branded Sound, 8RU, Sedan”, page 18

⇒ “2.2.3 Component Location Overview - Sound System, Branded Sound, 8RU, Wagon”, page 19

2.2.1 Component Location Overview - Sound System, 8 Speakers, 8RM

Note

The component location is shown for the sedan. The component location for the wagon is identical.

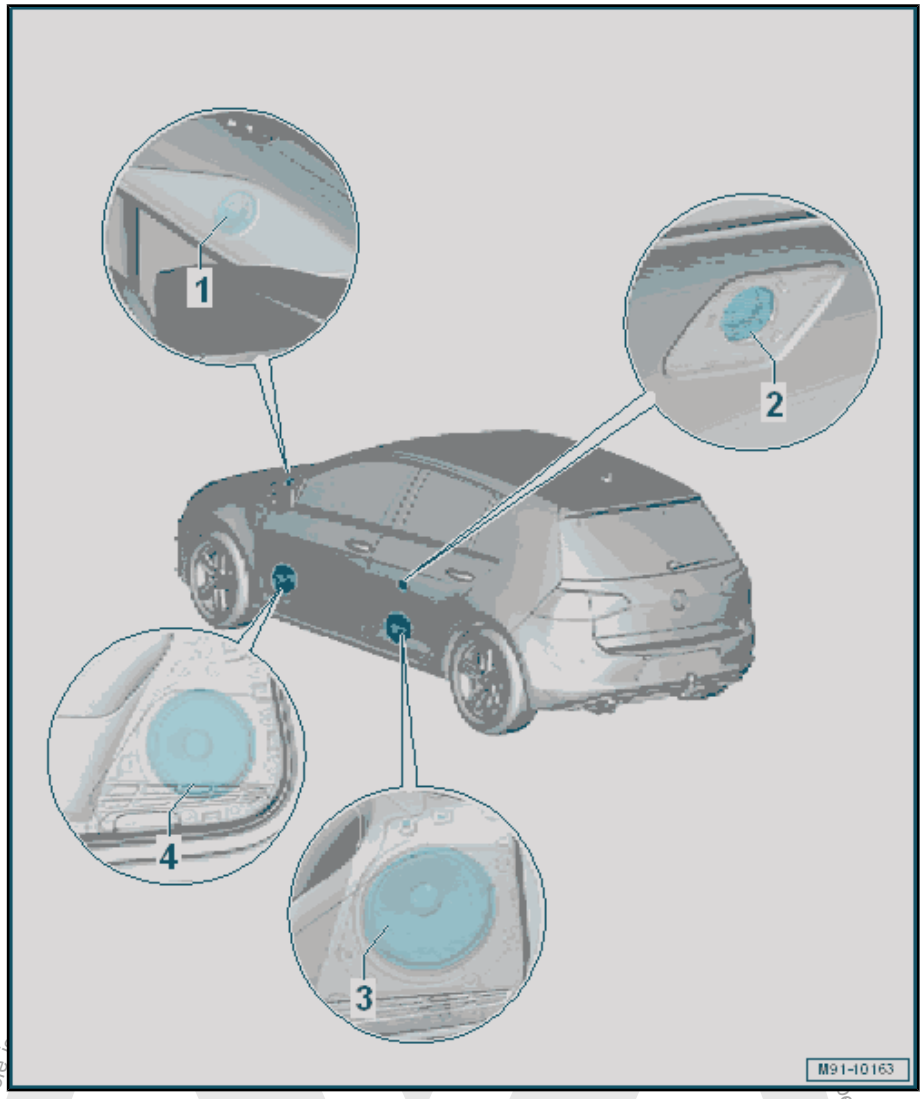

1 - Front Treble Speaker

- ❑ Left Front Treble Speaker - R20-
- ❑ Right Front Treble Speaker - R22-
- ❑ In the A-pillar upper trim panel
- ❑ Removing and installing. Refer to ⇒ “2.5 Left/Right Front Treble Speaker R20 / R22 , Removing and Installing”, page 23 .

2 - Rear Treble Speaker

- ❑ Left Rear Treble Speaker - R14-
- ❑ Right Rear Treble Speaker - R16-
- ❑ 2-door: in the side trim panels
- ❑ 4-door: in the door trim panels
- ❑ Removing and installing. Refer to ⇒ “2.4 Left/Right Rear Treble Speaker R14 / R16 , Removing and Installing”, page 22 .

3 - Rear Bass Speaker

- ❑ Left Rear Bass Speaker - R15-
- ❑ Right Rear Bass Speaker - R17-
- ❑ 2-door: in the sidewalls
- ❑ 4-door: in the rear doors
- ❑ Removing and installing. Refer to ⇒ “2.6 Left/Right Rear Bass Speaker R15 / R17 , Removing and Installing”, page 24 .

4 - Front Bass Speaker

- ❑ Left Front Bass Speaker - R21-
- ❑ Right Front Bass Speaker - R23-
- ❑ In the front doors
- ❑ Removing and installing. Refer to ⇒ “2.7 Left/Right Front Bass Speaker R21 / R23 , Removing and Installing”, page 25 .

Protected by copyright. Copying for private or commercial purposes, in part or in whole, is not permitted unless authorized by Volkswagen AG. Volkswagen AG does not guarantee or accept any liability with respect to the correctness of information in this document. Copyright by Volkswagen AG.

2.2.2 Component Location Overview - Sound System, Branded Sound, 8RU, Sedan

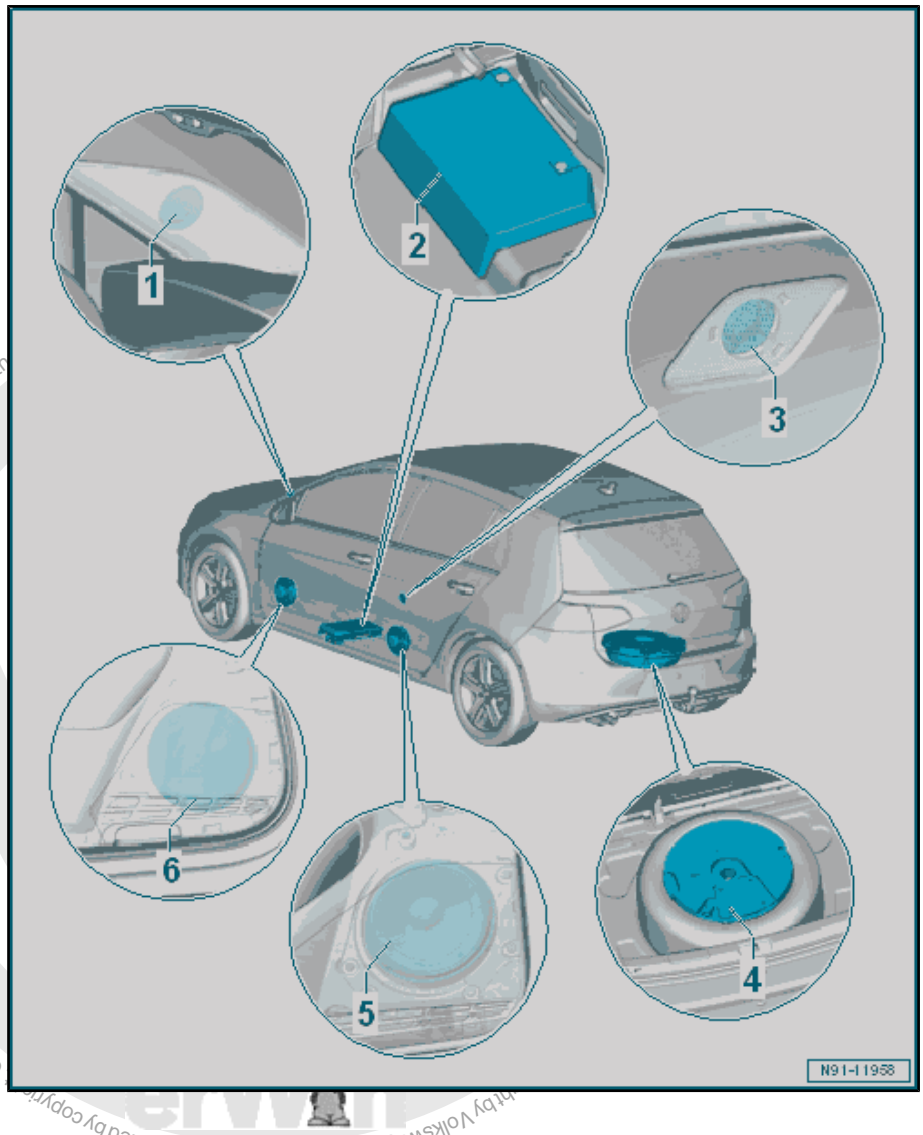

1 - Front Treble Speaker

- ❑ Left Front Treble Speaker - R20-
- ❑ Right Front Treble Speaker - R22-
- ❑ In the A-pillar upper trim panel
- ❑ Removing and installing. Refer to ⇒ “2.5 Left/Right Front Treble Speaker R20 / R22 , Removing and Installing”, page 23 .

2 - Digital Sound System Control Module - J525-

- ❑ Under the left front seat
- ❑ Connector assignment. Refer to ⇒ Wiring diagrams, Troubleshooting & Component locations.
- ❑ Removing and installing. Refer to ⇒ “2.3 Control Module/ Digital Sound System Amplifier, Removing and Installing”, page 20 .

3 - Rear Treble Speaker

- ❑ Left Rear Treble Speaker - R14-
- ❑ Right Rear Treble Speaker - R16-
- ❑ 2-door: in the side trim panels
- ❑ 4-door: in the door trim panels
- ❑ Removing and installing. Refer to ⇒ “2.4 Left/Right Rear Treble Speaker R14 / R16 , Removing and Installing”, page 22 .

4 - Subwoofer - R211-

- ❑ In the spare wheel well
- ❑ Removing and installing. Refer to ⇒ “2.8 Subwoofer R211 , Removing and Installing”, page 26 .

5 - Rear Bass Speaker

- ❑ Left Rear Bass Speaker - R15-
- ❑ Right Rear Bass Speaker - R17-
- ❑ 2-door: in the sidewalls
- ❑ 4-door: in the rear doors
- ❑ Removing and installing. Refer to ⇒ “2.6 Left/Right Rear Bass Speaker R15 / R17 , Removing and Installing”, page 24 .

6 - Front Bass Speaker

- ❑ Left Front Bass Speaker - R21-
- ❑ Right Front Bass Speaker - R23-
- ❑ In the front doors

Copyright by Volkswagen AG. Protected by copyright. Copying for private or commercial purposes, in part or in whole, is not permitted unless authorised by Volkswagen AG.

- ❑ Removing and installing. Refer to
  ⇒ “2.7 Left/Right Front Bass Speaker R21 / R23 , Removing and Installing”, page 25 .

2.2.3 Component Location Overview - Sound System, Branded Sound, 8RU, Wagon

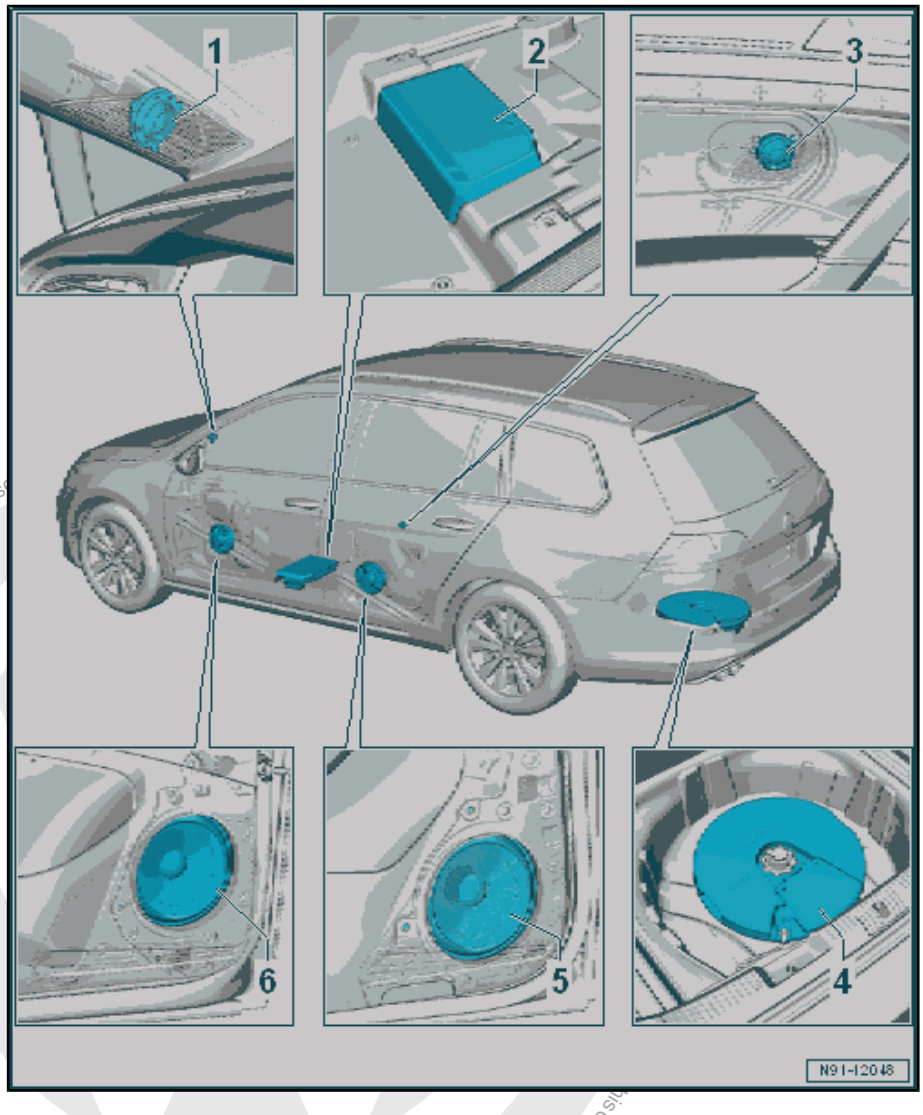

1 - Front Treble Speaker

- ❑ Left Front Treble Speaker - R20-
- ❑ Right Front Treble Speaker - R22-
- ❑ In the A-pillar upper trim panel
- ❑ Removing and installing. Refer to
  ⇒ “2.5 Left/Right Front Treble Speaker R20 / R22 , Removing and Installing”, page 23 .

2 - Digital Sound System Control Module - J525-

- ❑ Under the left front seat
- ❑ Connector assignment. Refer to ⇒ Wiring diagrams, Troubleshooting & Component locations.
- ❑ Removing and installing. Refer to
  ⇒ “2.3 Control Module/ Digital Sound System Amplifier, Removing and Installing”, page 20 .

3 - Rear Treble Speaker

- ❑ Left Rear Treble Speaker - R14-
- ❑ Right Rear Treble Speaker - R16-
- ❑ In the door trim panels
- ❑ Removing and installing. Refer to
  ⇒ “2.4 Left/Right Rear Treble Speaker R14 / R16 , Removing and Installing”, page 22 .

4 - Subwoofer - R211-

- ❑ In the spare wheel well
- ❑ Removing and installing. Refer to ⇒ “2.8 Subwoofer R211 , Removing and Installing”, page 26 .

5 - Rear Bass Speaker

- ❑ Left Rear Bass Speaker - R15-
- ❑ Right Rear Bass Speaker - R17-
- ❑ In the rear doors
- ❑ Removing and installing. Refer to
  ⇒ “2.6 Left/Right Rear Bass Speaker R15 / R17 , Removing and Installing”, page 24 .

6 - Front Bass Speaker

- ❑ Left Front Bass Speaker - R21-
- ❑ Right Front Bass Speaker - R23-

Protected by copyright. Copyright by Volkswagen AG.

Protected by copyright. Copyright or private or commercial purposes, not for in whole, is not permitted unless authorised by Volkswagen AG. Volkswagen AG does not guarantee or accept any liability with respect to the correctness of information in this document. Copyright by Volkswagen AG.

- In the front doors
- Removing and installing. Refer to
  ⇒ "2.7 Left/Right Front Bass Speaker R21 / R23 , Removing and Installing", page 25 .

2.3 Control Module/Digital Sound System Amplifier, Removing and Installing

⇒ "2.3.1 Digital Sound System Control Module J525 , Removing and Installing", page 20

⇒ "2.3.2 Digital Sound System Control Module J525 Bracket, Removing and Installing", page 21

2.3.1 Digital Sound System Control Module - J525- , Removing and Installing

Special tools and workshop equipment required

- Torque Wrench 1783 - 2-10Nm - VAG1783-
- Fiber-Optic Repair Set - Connector Protective Caps - VAS6223/9-

If the control module is replaced, select the `Replacement` function for the appropriate control module in `Guided Fault Finding` using the Vehicle Diagnostic Tester .

Removing

– Raise the left front seat into its highest position and then move it all the way back.

– Turn off the ignition and all electrical equipment.

– Remove the ignition key, if equipped.

– Remove the expanding rivets -2-, slide the cover -1- evenly in the direction of travel and remove it.

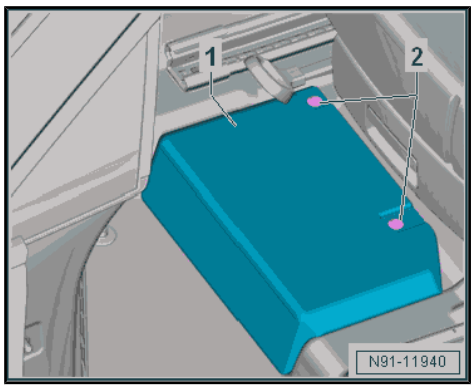

– Release and disconnect the connector -3- from the Digital Sound System Control Module - J525- -1-.

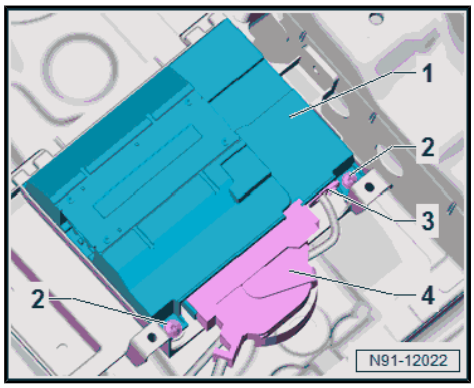

– Insert the Fiber-Optic Repair Set - Connector Protective Caps - VAS6223/9- -1- onto the MOST Bus connector -2-.

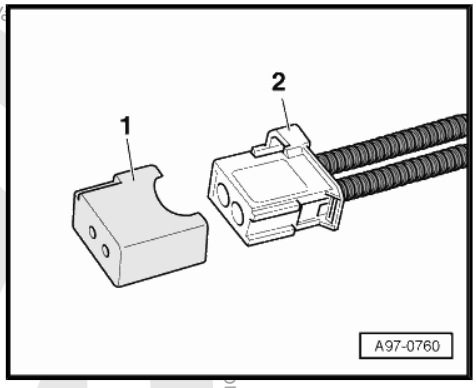

– Release and disconnect the connector -4- from the Digital Sound System Control Module - J525- -1-.
– Remove the screws -2-.
– Pivot the Digital Sound System Control Module - J525- -1- out of the bracket.

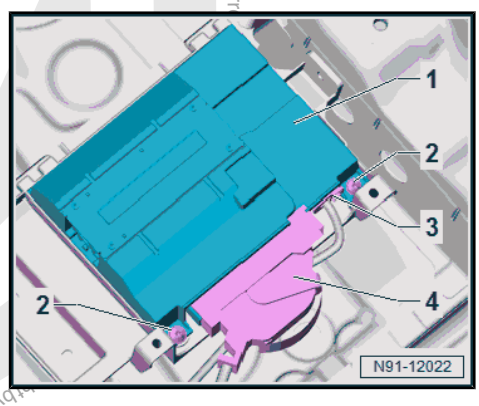

Remove the bracket. Refer to
⇒ “2.3.2 Digital Sound System Control Module J525 Bracket, Removing and Installing”, page 21 .

Installing

Install in reverse order of removal. Note the following:

When installing, make sure that the Digital Sound System Control Module - J525- is properly inserted into the notch on the bracket.

Make sure the cover is mounted correctly on the front edge of the bracket when installing it.

Tightening Specifications

Component	Tightening Specification
Screws -2- to bracket	3 Nm

Connectors to Digital Sound System Control Module - J525-

1 - 38-Pin Connector - T38-

2 - MOST Bus

Refer to ⇒ Wiring diagrams, Troubleshooting & Component locations

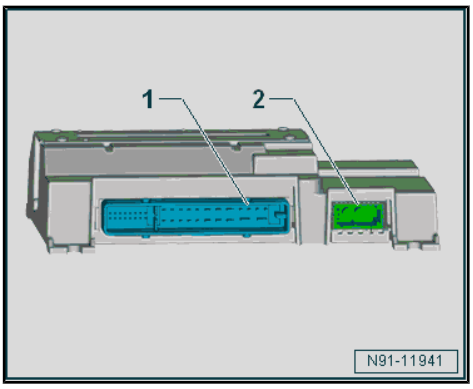

2.3.2 Digital Sound System Control Module - J525- Bracket, Removing and Installing

Special tools and workshop equipment required

♦ Torque Wrench 1783 - 2-10Nm - VAG1783-

Removing

– Remove the Digital Sound System Control Module - J525- . Refer to

⇒ “2.3.1 Digital Sound System Control Module J525 , Removing and Installing”, page 20 .

– Fold back the carpet and floor insulation at the center tunnel and floor panel.

– Remove the bolt -1- on the center tunnel and the nuts -2- on the bracket.

– Remove the bracket for the Digital Sound System Control Module - J525- -3-.

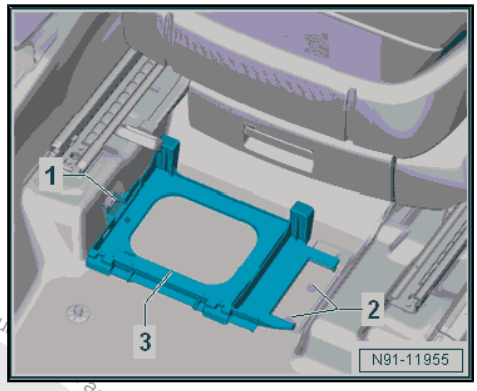

Installing

Install in reverse order of removal.

Tightening Specifications

Component	Tightening Specification
Bolt -1-	6 Nm
Nuts -2-	6 Nm

2.4 Left/Right Rear Treble Speaker -R14- / -R16- , Removing and Installing

⇒ “2.4.1 Left/Right Rear Treble Speaker R14 / R16 , 2-Door Vehicles, Removing and Installing”, page 22

⇒ “2.4.2 Left/Right Rear Treble Speaker R14 / R16 , 4-Door Vehicles, Removing and Installing”, page 23

2.4.1 Left/Right Rear Treble Speaker -R14- / -R16- , 2-Door Vehicles, Removing and Installing

The Left Rear Treble Speaker - R14- / Right Rear Treble Speaker - R16- are located in the rear side trim panels.

The removal and installation is described for the left side. Removing and installing on the right side is identical.

If the treble speaker must be replaced, then the speaker mesh must also be replaced.

Removing

– Turn off the ignition and all electrical equipment.

– Remove the ignition key, if equipped.

– Remove the side trim panel. Refer to ⇒ Body Interior; Rep. Gr. 70 ; Passenger Compartment Trim; Side Trim Panel, Removing and Installing .

– Disengage the connector and disconnect.

– Detach the treble speaker with the speaker mesh from the side trim panel using workshop tools.

Installing

Install in reverse order of removal. Note the following:

– Insert the treble speaker with the speaker mesh into the door trim panel.

Protected by copyright. Copying for private or commercial purposes, in part or in whole, is not permitted unless authorised by Volkswagen AG. Volkswagen AG does not guarantee or accept any liability with respect to the correctness of information in this document. Copyright by Volkswagen AG.

– Heat the pins using workshop tools so that the speaker mesh rests securely and flush in the side trim panel.

2.4.2 Left/Right Rear Treble Speaker -R14- / -R16- , 4-Door Vehicles, Removing and Installing

The Left Rear Treble Speaker - R14- / Right Rear Treble Speaker - R16- are located in the rear door trim panels.

The removal and installation is described for the left side. Removing and installing on the right side is identical.

If the treble speaker must be replaced, then the speaker mesh must also be replaced.

Removing

– Turn off the ignition and all electrical equipment.

– Remove the ignition key, if equipped.

– Remove the rear door trim panel. Refer to ⇒ Body Interior; Rep. Gr. 70 ; Rear Door Trim Panels; Rear Door Trim Panel, Removing and Installing .

– Disengage the connector and disconnect.

– Detach the treble speaker with the speaker mesh from the door trim panel using workshop tools.

Installing

Install in reverse order of removal. Note the following:

– Insert the treble speaker with the speaker mesh into the door trim panel.

– Heat the pins using workshop tools so that the speaker mesh rests securely and flush in the side trim panel.

2.5 Left/Right Front Treble Speaker -R20- / -R22- , Removing and Installing

The Left Front Treble Speaker - R20- / Right Front Treble Speaker - R22- are located in the A-pillar trim panels.

The removal and installation is described for the left side. Removing and installing on the right side is identical.

If the treble speaker must be replaced, then the A-pillar trim panel must also be replaced.

Removing

– Turn off the ignition and all electrical equipment.

– Remove the ignition key, if equipped.

– Remove the A-pillar trim panel. Refer to ⇒ Body Interior; Rep. Gr. 70 ; Passenger Compartment Trim; A-Pillar Trim Panel, Removing and Installing .

Installing

Install in reverse order of removal.

Protected by copyright. Copying for private or commercial purposes, in part or in whole, is not permitted unless authorised by Volkswagen AG. Volkswagen AG does not guarantee or accept any liability with respect to the correctness of information in this document. Copyright by Volkswagen AG.

2.6 Left/Right Rear Bass Speaker -R15- / -R17- , Removing and Installing

⇒ “2.6.1 Left/Right Rear Bass Speaker R15 / R17 , 2-Door Vehicles, Removing and Installing”, page 24

⇒ “2.6.2 Left/Right Rear Bass Speaker R15 / R17 , 4-Door Vehicles, Removing and Installing”, page 25

2.6.1 Left/Right Rear Bass Speaker -R15- / -R17- , 2-Door Vehicles, Removing and Installing

The Left Rear Bass Speaker - R15- / Right Rear Bass Speaker - R17- are located in the sidewall.

The removal and installation is described for the left side. Removing and installing on the right side is identical.

Removing

– Turn off the ignition and all electrical equipment.

– Remove the ignition key, if equipped.

– Remove the side trim panel. Refer to ⇒ Body Interior; Rep. Gr. 70 ; Passenger Compartment Trim; Sill Panel Strip, Removing and Installing .

– Release and disconnect the connector -1- from the bass speaker in direction of -arrow-.

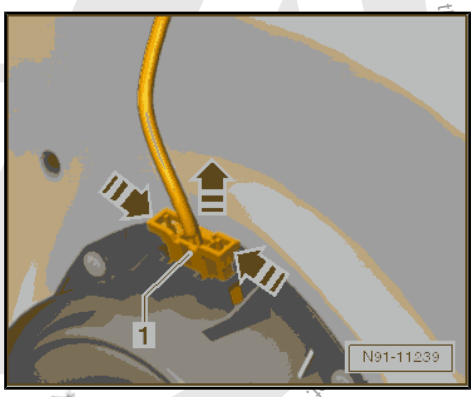

– Drill out the rivets -1- using a suitable drill.

– Remove the bass speaker.

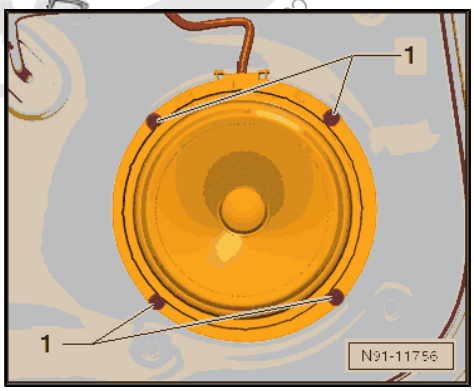

> **Caution**
>
> *Always remove any shavings from the sidewall resulting from the drilling, otherwise they may cause corrosion damage later.*
>
> *If the paint on the door frame gets damaged during drilling, touch-up immediately.*

Installing

Install in reverse order of removal. Note the following:

– Secure the speaker using special blind rivets when installing (Note the part number. Refer to the Parts Catalog).

Protected by copyright. Copying for private or commercial purposes, in part or in whole, is not permitted unless authorised by Volkswagen AG. Volkswagen AG does not guarantee or accept any liability with respect to the

2.6.2 Left/Right Rear Bass Speaker -R15- / -R17- , 4-Door Vehicles, Removing and Installing

The Left Rear Bass Speaker - R15- / Right Rear Bass Speaker - R17- are located at the bottom of the rear doors.

The removal and installation is described for the left side. Removing and installing on the right side is identical.

Removing

– Turn off the ignition and all electrical equipment.

– Remove the ignition key, if equipped.

– Remove the rear door trim panel. Refer to ⇒ Body Interior; Rep. Gr. 70 ; Rear Door Trim Panels; Rear Door Trim Panel, Removing and Installing .

– Release and disconnect the connector -1- from the bass speaker in the direction of the -arrow-.

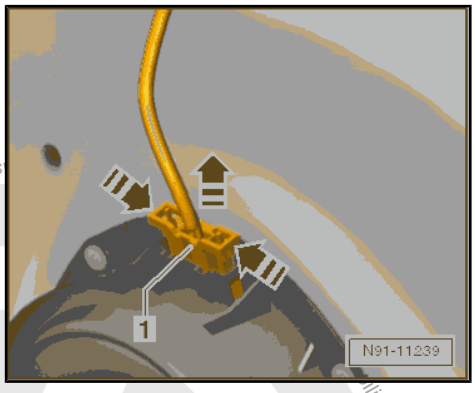

– Drill out the rivets -1- using a suitable drill.

– Remove the bass speaker.

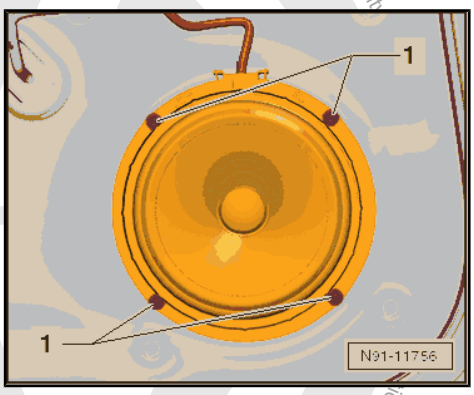

> **Caution**
>
> *Always remove any shavings resulting from the drilling, otherwise they may cause corrosion damage later.*
>
> *If the paint on the door frame gets damaged during drilling, touch-up immediately.*

Installing

Install in reverse order of removal. Note the following:

– Secure the speaker using special blind rivets when installing (Note the part number. Refer to the Parts Catalog).

2.7 Left/Right Front Bass Speaker -R21- / -R23- , Removing and Installing

The Left Front Bass Speaker - R21- / Right Front Bass Speaker - R23- are located at the bottom of the front doors.

The removal and installation is described for the left side. Removing and installing on the right side is identical.

Removing

– Turn off the ignition and all electrical equipment.

– Remove the ignition key, if equipped.

Protected by copyright. Copying for private or commercial purposes, in part or in whole, is not permitted unless authorised by Volkswagen AG. Volks
ion in this document. Copyright by Volkswagen AG.

– Remove the front door trim panel. Refer to ⇒ Body Interior; Rep. Gr. 70 ; Front Door Trim Panels; Front Door Trim Panel, Removing and Installing .

– Release and disconnect the connector -1- from the bass speaker in direction of -arrow-.

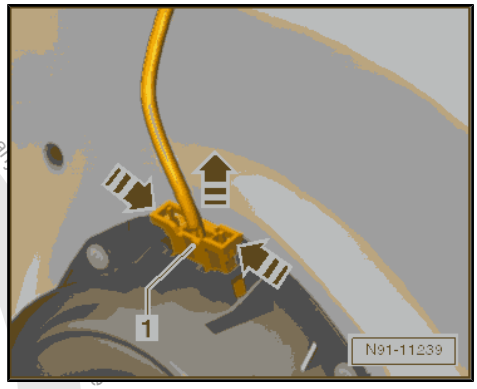

– Drill out the rivets -1- using a suitable drill.

– Remove the bass speaker.

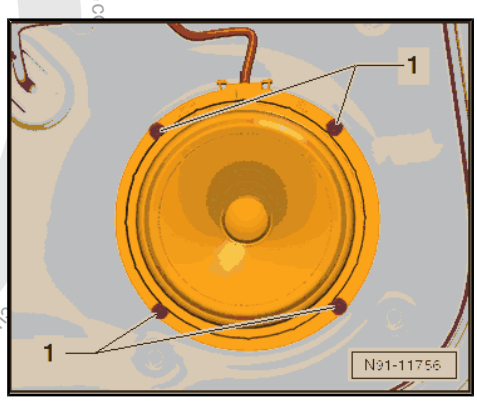

> **Caution**
>
> ***Always remove any shavings resulting from the drilling, otherwise they may cause corrosion damage later.***
>
> ***If the paint on the door frame gets damaged during drilling, touch-up immediately.***

Installing

Install in reverse order of removal. Note the following:

– Secure the speaker using special blind rivets when installing (Note the part number. Refer to the Parts Catalog).

2.8 Subwoofer - R211- , Removing and Installing

⇒ “2.8.1 Subwoofer R211 , Removing and Installing, Sedan”, page 26

⇒ “2.8.2 Subwoofer R211 , Removing and Installing, Wagon”, page 27

2.8.1 Subwoofer - R211- , Removing and Installing, Sedan

The Subwoofer - R211- is located in the spare wheel well.

Removing

– Turn off the ignition and all electrical equipment.

– Remove the ignition key, if equipped.

– Remove the luggage compartment floor.

– Release and disconnect the connector -2- from the Subwoofer - R211- -1-.
– Remove the bolt -3- on the Subwoofer - R211- -1-.
– Remove the Subwoofer - R211- -1- upward.

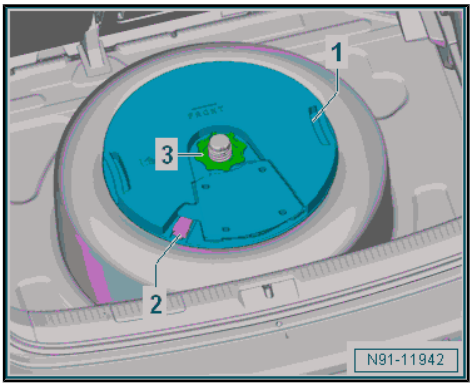

Installing

Install in reverse order of removal.

Tightening Specifications

Component	Tightening Specification
Bolt -3- to the Subwoofer - R211-	9 Nm

2.8.2 Subwoofer - R211- , Removing and Installing, Wagon

The Subwoofer - R211- is located in the spare wheel well.

Removing

– Turn off the ignition and all electrical equipment.
– Remove the ignition key, if equipped.
– Fold up the luggage compartment floor.
– Release and disconnect the connector -3- from the Subwoofer - R211- -1-.
– Remove the bolt -2- on the Subwoofer - R211- -1-.
– Remove the Subwoofer - R211- -1- upward.

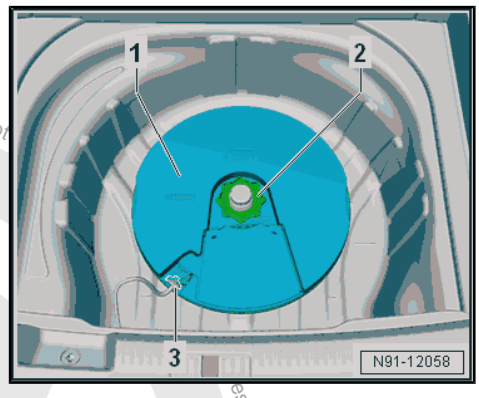

Installing

Install in reverse order of removal.

Tightening Specifications

Component	Tightening Specification
Bolt -2- to Subwoofer - R211-	9 Nm

Protected by copyright. Copyright for private or commercial purposes, in part or in whole, is not permitted unless authorised by Volkswagen AG. Volkswagen AG does not guarantee or accept any liability with respect to the correctness of information in this document. Copyright by Volkswagen AG.

3 Antenna Systems

⇒ "3.1 Component Location Overview - Antenna Systems", page 28

⇒ "3.2 AM Frequency Filter R177 , Removing and Installing", page 31

⇒ "3.3 FM Frequency Filter in the Negative Wire R178 / FM Frequency Filter in the Positive Wire R179 , Removing and Installing", page 32

⇒ "3.4 Antenna Module, Removing and Installing", page 32

⇒ "3.5 Roof Antenna, Removing and Installing", page 35

3.1 Component Location Overview - Antenna Systems

⇒ "3.1.1 Component Location Overview - Antenna Systems, Sedan", page 28

⇒ "3.1.2 Component Location Overview - Antenna Systems, Wagon", page 30

3.1.1 Component Location Overview - Antenna Systems, Sedan

or private or commercial purposes in part or in whole is not permitted unless authorised by Volkswagen AG. Volkswagen AG does not guarantee or accept any

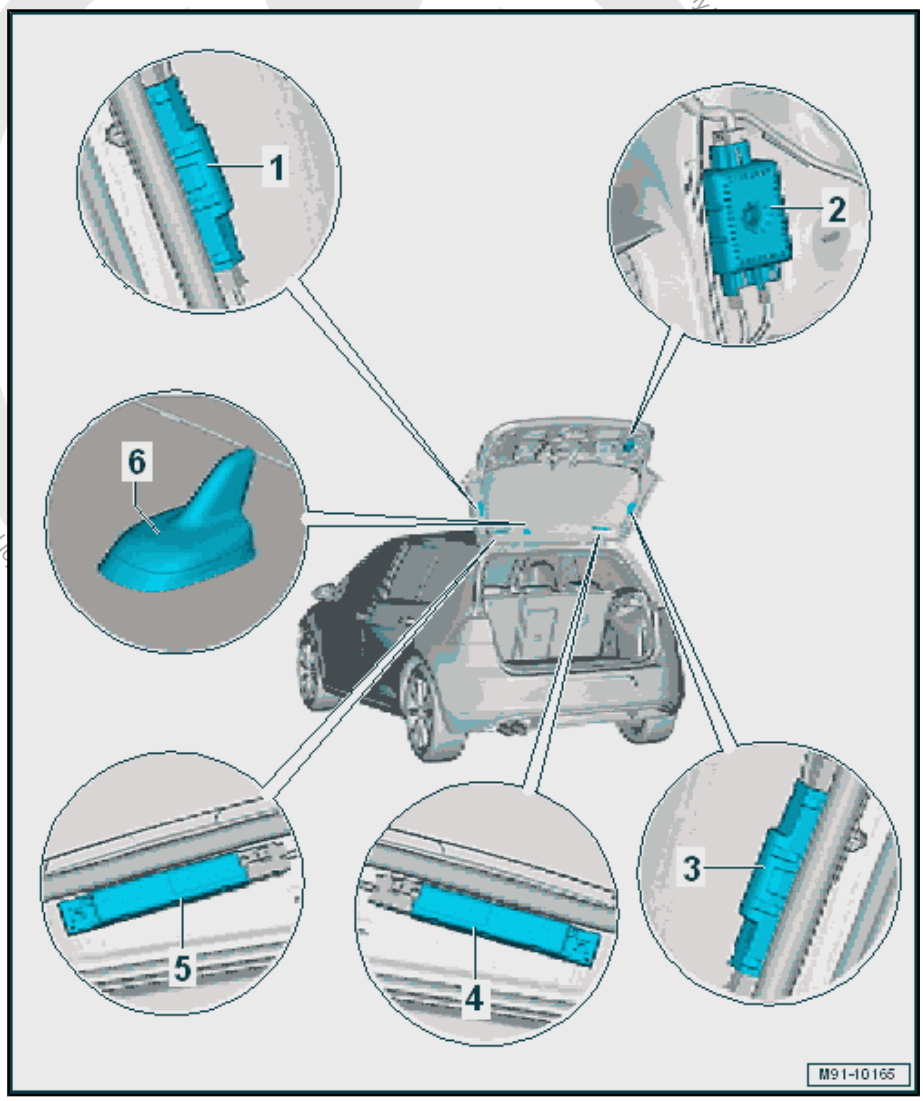

1 - FM Frequency Filter in Positive Wire - R179-

- On the left window frame of the rear lid
- FM plus trap circuit
- Its function is to prevent antenna signals from shorting to ground
- Removing and installing. Refer to ⇒ "3.3 FM Frequency Filter in the Negative Wire R178 / FM Frequency Filter in the Positive Wire R179 , Removing and Installing", page 32 .

2 - AM Frequency Filter - R177-

- On the lower right of the rear lid
- Its function is to prevent antenna signals from shorting to ground
- Removing and installing. Refer to ⇒ "3.2 AM Frequency Filter R177 , Removing and Installing", page 31 .

3 - FM Frequency Filter in Negative Wire - R178-

- On the right window frame of the rear lid
- FM minus trap circuit

- ❑ Its function is to prevent antenna signals from shorting to ground
- ❑ Removing and installing. Refer to ⇒ “3.3 FM Frequency Filter in the Negative Wire R178 / FM Frequency Filter in the Positive Wire R179 , Removing and Installing”, page 32 .

4 - Right Antenna Module - R109-

- ❑ On the upper right of the rear lid
- ❑ Connected to Radio Antenna - R248-
- ❑ AM/FM impedance converter
- ❑ Removing and installing. Refer to ⇒ “3.4.2 Right Antenna Module R109 , Removing and Installing”, page 33 .

5 - Left Antenna Module - R108-

- ❑ On the upper left of rear lid
- ❑ Connected to Radio Antenna 2 - R93-
- ❑ Impedance converter FM2
- ❑ Removing and installing. Refer to ⇒ “3.4.1 Left Antenna Module R108 , Removing and Installing”, page 32 .

6 - Roof Antenna - RX5-

- ❑ Depending on the vehicle equipment level:

- ♦ GPS Antenna - R50-
- ♦ Satellite Antenna - R170-
- ♦ GSM Antenna - R205-

- ❑ Removing and installing. Refer to ⇒ “3.5 Roof Antenna, Removing and Installing”, page 35 .

Protected by copyright. Copying for private or commercial purposes, in part or in whole, is not permitted unless authorised by Volkswagen AG. Volkswagen AG does not guarantee or accept any liability with respect to the correctness of information in this document. Copyright by Volkswagen AG.

3.1.2 Component Location Overview - Antenna Systems, Wagon

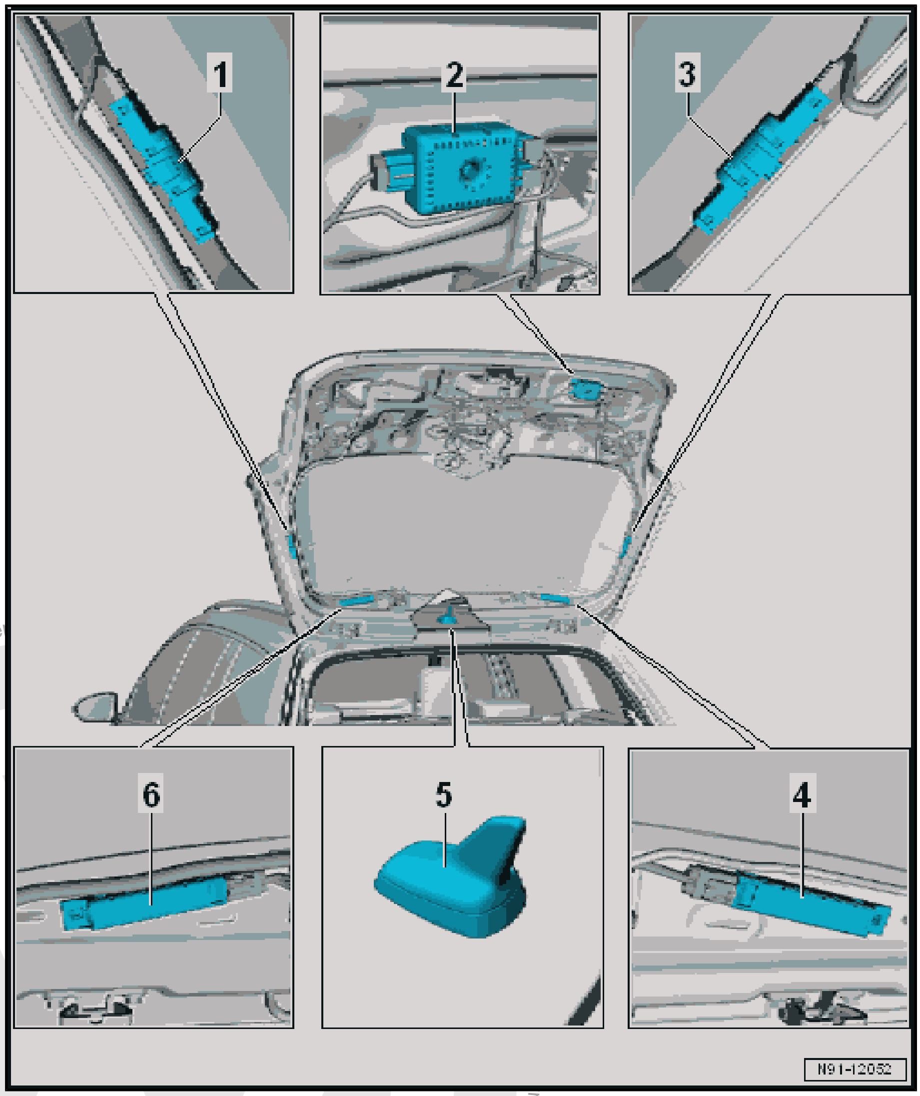

1 - FM Frequency Filter in Positive Wire - R179-

- ❑ On the left window frame of the rear lid
- ❑ FM plus trap circuit
- ❑ Its function is to prevent antenna signals from shorting to ground
- ❑ Removing and installing. Refer to ⇒ “3.3 FM Frequency Filter in the Negative Wire R178 / FM Frequency Filter in the Positive Wire R179 , Removing and Installing”, page 32 .

2 - AM Frequency Filter - R177-

- ❑ On the lower right of the rear lid
- ❑ Its function is to prevent antenna signals from shorting to ground
- ❑ Removing and installing. Refer to ⇒ “3.2 AM Frequency Filter R177 , Removing and Installing”, page 31 .

3 - FM Frequency Filter in Negative Wire - R178-

- ❑ On the right window frame of the rear lid
- ❑ FM minus trap circuit
- ❑ Its function is to prevent antenna signals from shorting to ground
- ❑ Removing and installing. Refer to ⇒ “3.3 FM Frequency Filter in the Negative Wire R178 / FM Frequency Filter in the Positive Wire R179 , Removing and Installing”, page 32 .

4 - Right Antenna Module - R109-

- ❑ On the upper right of the rear lid
- ❑ Related to the Radio Antenna - R248-
- ❑ AM/FM impedance converter
- ❑ Removing and installing. Refer to ⇒ “3.4.2 Right Antenna Module R109 , Removing and Installing”, page 33 .

5 - Roof Antenna - RX5-

- ❑ Depending on the vehicle equipment level:

- ♦ GPS Antenna - R50-
- ♦ Satellite Antenna - R170-
- ♦ GSM Antenna - R205-

- ❑ Removing and installing. Refer to ⇒ “3.4.1 Left Antenna Module R108 , Removing and Installing”, page 32 .

Protected by copyright. Copying for private or commercial purposes, in part or in whole, is not permitted unless authorised by Volkswagen AG. Volkswagen AG does not guarantee or accept any liability with respect to the correctness of information in this document. Copyright by Volkswagen AG.

6 - Left Antenna Module - R108-

- ❑ On the upper left of rear lid
- ❑ Related to the Radio Antenna 2 - R93-
- ❑ Impedance converter FM2
- ❑ Removing and installing. Refer to
  ⇒ “3.4.1 Left Antenna Module R108 , Removing and Installing”, page 32 .

3.2 AM Frequency Filter - R177- , Removing and Installing

Special tools and workshop equipment required

- ♦ Torque Wrench 1783 - 2-10Nm - VAG1783-

Removing

– Turn off the ignition and all electrical equipment.

– Then remove the ignition key, if equipped.

– Remove the lower rear lid trim panel. Refer to ⇒ Body Interior; Rep. Gr. 70 ; Luggage Compartment Trim Panels; Lower Rear Lid Trim Panel, Removing and Installing .

– Release and disconnect the connectors -1 and 3- from the AM Frequency Filter - R177- -2-.

– Remove the bolt -4-.

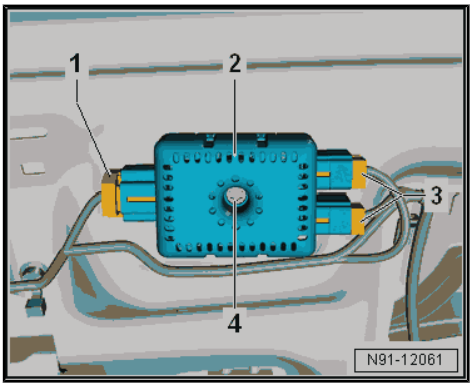

– Remove the AM Frequency Filter - R177- -1- from the rear lid in direction of -arrow A-, while paying attention to the mounting hooks.

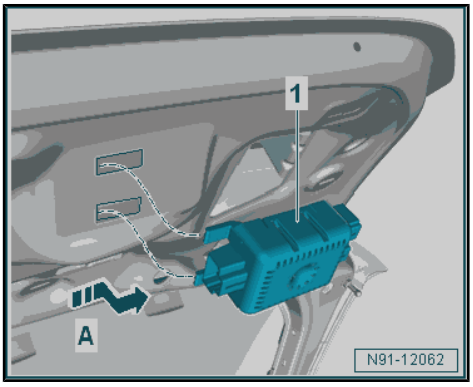

Installing

Install in reverse order of removal. Note the following:

Tightening Specifications

Component	Tightening Specification
Bolt to AM Frequency Filter - R177-	6 Nm

Protected by copyright. Copyright by Volkswagen AG. Volkswagen AG does not guarantee or accept any liability with respect to the correctness of information in this document. Copyright by Volkswagen AG. Copying for private or commercial purposes, in part or in whole, is not permitted unless authorised by Volkswagen AG.

3.3 FM Frequency Filter in the Negative Wire - R178- / FM Frequency Filter in the Positive Wire - R179- , Removing and Installing

The removal and installation of the FM Frequency Filter in Negative Wire - R178- on the right side is described. The removal and installation of the FM Frequency Filter in Positive Wire - R179- on the left side is identical.

Removing

– Turn off the ignition and all electrical equipment.

– Remove the ignition key, if equipped.

– Remove the upper rear lid trim panel. Refer to ⇒ Body Interior; Rep. Gr. 70 ; Luggage Compartment Trim Panels; Upper Rear Lid Trim Panel, Removing and Installing .

– Disconnect the connector -arrows- from the FM Frequency Filter in Negative Wire - R178- .

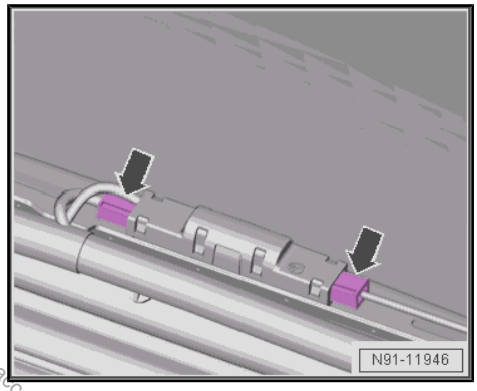

– Carefully pry out the FM Frequency Filter in Negative Wire - R178- near the -arrow- using a suitable tool.

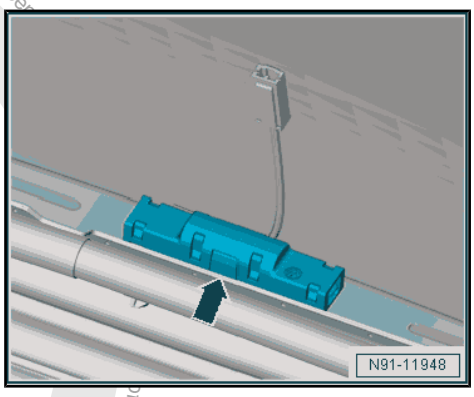

Installing

Install in reverse order of removal. Note the following:

– Push the FM Frequency Filter in Negative Wire - R178- into the installation opening until it engages.

3.4 Antenna Module, Removing and Installing

⇒ “3.4.1 Left Antenna Module R108 , Removing and Installing”, page 32

⇒ “3.4.2 Right Antenna Module R109 , Removing and Installing”, page 33

3.4.1 Left Antenna Module - R108- , Removing and Installing

Special tools and workshop equipment required

♦ Torque Wrench 1783 - 2-10Nm - VAG1783-

Removing

– Turn off the ignition and all electrical equipment.

Protected by copyright. Copying for private or commercial purposes, in part or whole is not permitted unless authorised by Volkswagen AG. Volkswagen AG does not guarantee or accept any guarantee of information in this document. Copyright by Volkswagen AG.

– Remove the ignition key, if equipped.

The Left Antenna Module - R108- is located on the upper left side of the rear lid.

– Remove the upper rear lid trim panel. Refer to ⇒ Body Interior; Rep. Gr. 70 ; Luggage Compartment Trim Panels; Upper Rear Lid Trim Panel, Removing and Installing .

– Release and disconnect the connectors -arrows- from the Left Antenna Module - R108- .

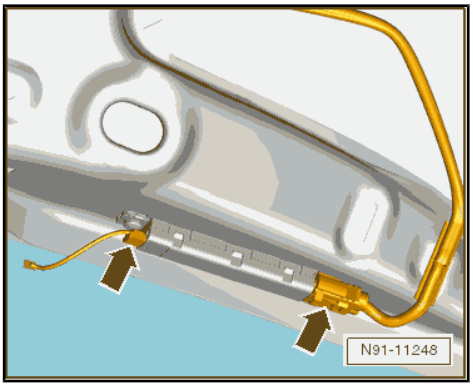

– Loosen the screw -arrow-.

– Remove the screw with the metal clip and Left Antenna Module - R108- .

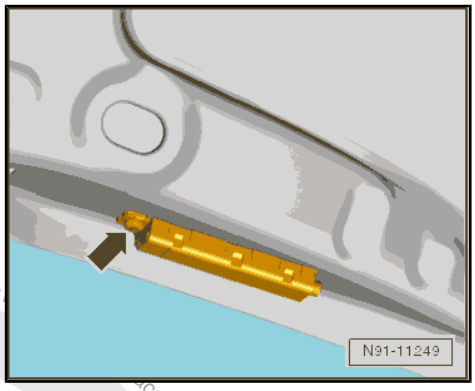

– Slide the Left Antenna Module - R108- in the direction of the -arrow-.

– Remove the Left Antenna Module - R108- .

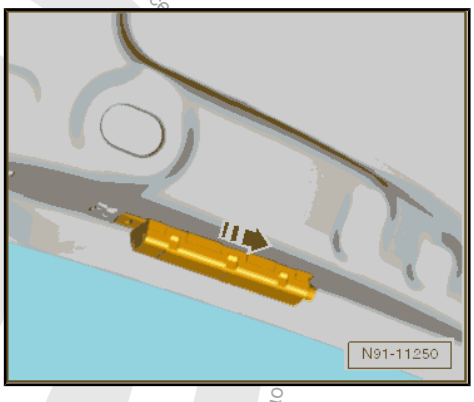

Installing

Install in reverse order of removal.

Tightening Specifications

Component	Tightening Specification
Screw to Left Antenna Module - R108-	2 Nm

3.4.2 Right Antenna Module - R109- , Removing and Installing

Special tools and workshop equipment required

♦ Torque Wrench 1783 - 2-10Nm - VAG1783-

Protected by copyright. Copyright by Volkswagen AG. Copyright for private and commercial purposes, in part or in whole, is not permitted unless authorised by Volkswagen AG. Volkswagen AG does not guarantee or accept any liability with respect to the correctness of information in this document.

Removing

The Right Antenna Module - R109- is located on the upper right side of the rear lid.

– Turn off the ignition and all electrical equipment.

– Remove the ignition key, if equipped.

– Remove the rear lid upper trim panel. Refer to ⇒ Body Interior; Rep. Gr. 70 ; Luggage Compartment Trim Panels; Upper Rear Lid Trim Panel, Removing and Installing .

– Release and disconnect the connectors -arrows- from the Right Antenna Module - R109- .

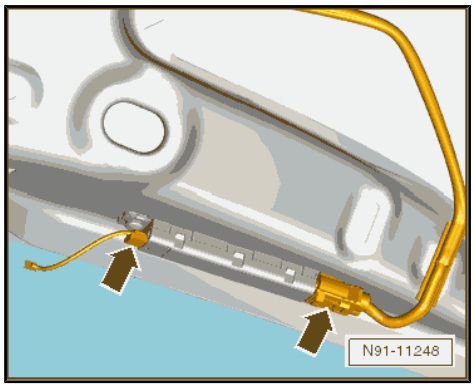

– Loosen the screw -arrow-.

– Remove the screw with the metal clip and Right Antenna Module - R109- .

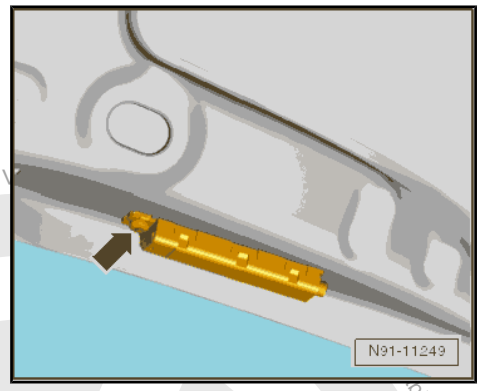

– Slide the Right Antenna Module - R109- in the direction of the -arrow-.

– Remove the Right Antenna Module - R109- .

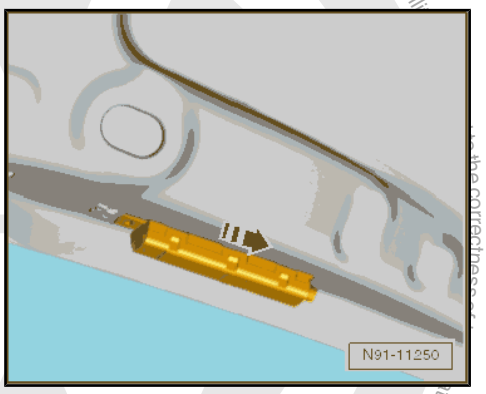

Installing

Install in reverse order of removal.

Tightening Specifications

Component	Tightening Specification
Screw to Right Antenna Module - R109-	2 Nm

Protected by copyright. Copying for private or commercial purposes, in part or in whole, is not permitted unless authorised by Volkswagen AG. Copyright by Volkswagen AG.

3.5 Roof Antenna, Removing and Installing

⇒ "3.5.1 Roof Antenna, Removing and Installing, Sedan", page 35

⇒ "3.5.2 Roof Antenna, Removing and Installing, Wagon", page 35

3.5.1 Roof Antenna, Removing and Installing, Sedan

Special tools and workshop equipment required

- Torque Wrench 1783 - 2-10Nm - VAG1783-

The back of the headliner must be lowered in order to remove the Roof Antenna - RX5- .

The antenna wires are connected directly to the base of the Roof Antenna - RX5- .

Removing

- Turn off the ignition and all electrical equipment.
- Remove the ignition key, if equipped.
- Loosen the B-pillar upper trim panel. Refer to ⇒ Body Interior; Rep. Gr. 70 ; Passenger Compartment Trim Panel; B-Pillar Trim Panel, Removing and Installing .
- Remove the roof end strip. Refer to ⇒ Body Interior; Rep. Gr. 70 ; Roof Trim Panels; Roof End Strip, Removing and Installing .
- Remove the C-pillar trim panel. Refer to ⇒ Body Interior; Rep. Gr. 70 ; Passenger Compartment Trim Panel; C-Pillar Trim Panel, Removing and Installing .
- Lower the back of the headliner.
- Release and disconnect the connectors -1- from the antenna wires.
- Remove the bolt -3- with the clip.
- Remove the Roof Antenna - RX5- -2-.

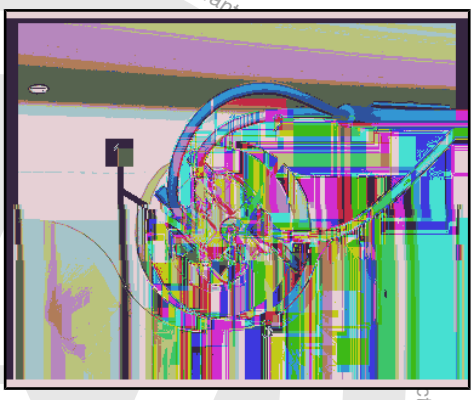

Installing

Install in reverse order of removal. Note the following:

- Position the Roof Antenna - RX5- and press it down until it latches.

Tightening Specifications

Component	Tightening Specification
Bolt -3- to Roof Antenna - RX5-	6 Nm

3.5.2 Roof Antenna, Removing and Installing, Wagon

Special tools and workshop equipment required

- Torque Wrench 1783 - 2-10Nm - VAG1783-

The back of the headliner must be lowered in order to remove the Roof Antenna - RX5- .

Protected by copyright. Copying for private or commercial purposes, in part or in whole, is not permitted unless authorised by Volkswagen AG. Volkswagen AG does not guarantee the accuracy or completeness of information in this document. Copyright by Volkswagen AG.

The antenna wires are connected directly to the base of the Roof Antenna - RX5- .

Removing

- Turn off the ignition and all electrical equipment.
- Then remove the ignition key, if equipped.
- Remove the C-pillar trim panel. Refer to ⇒ Body Interior; Rep. Gr. 70 ; Passenger Compartment Trim Panel; C-Pillar Trim Panel, Removing and Installing .
- Remove the roof end strip. Refer to ⇒ Body Interior; Rep. Gr. 70 ; Roof Trim Panels; Roof End Strip, Removing and Installing .
- Remove the D-pillar trim panel. Refer to ⇒ Body Interior; Rep. Gr. 70 ; Passenger Compartment Trim Panel; D-Pillar Trim Panel, Removing and Installing .
- If installed, remove the screen separator mounting eye bolts, but do not remove the mounting eyes. Refer to ⇒ Body Interior; Rep. Gr. 68 ; Equipment; Screen Separator Bracket, Removing and Installing .
- Lower the back of the headliner.
- Release and disconnect the connectors -1- from the antenna wires.
- Remove the bolt -3- with the clip.
- Remove the Roof Antenna - RX5- -2- from the outside.

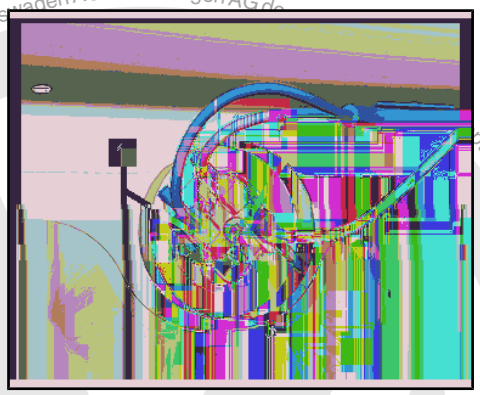

Installing

Install in reverse order of removal. Note the following:

- Position the Roof Antenna - RX5- and press it down until it latches.

Tightening Specifications

Component	Tightening Specification
Bolt -3- to Roof Antenna - RX5-	6 Nm

3.6 Vehicle GPS Antennas, Removing and Installing

⇒ “3.6.1 Vehicle GPS Antenna 1 R259 Removing and Installing, GPS”, page 36

⇒ “3.6.2 Vehicle GPS Antenna 2 R260 , Removing and Installing, GSM”, page 37

3.6.1 Vehicle GPS Antenna 1 - R259- Removing and Installing, GPS

The Vehicle GPS Antenna 1 - R259- is located behind the left rear bumper cover.

Removing

- Turn off the ignition and all electrical equipment.
- Remove the ignition key, if equipped.
- Remove the rear bumper cover. Refer to ⇒ Body Exterior; Rep. Gr. 63 ; Rear Bumper; Bumper Cover, Removing and Installing .

Protected by copyright. Copying for private or commercial purposes, in part or in whole is not permitted unless authorised by Volkswagen AG. Volkswagen AG does not give any liability with respect to the correctness of information in this document. Copyright by Volkswagen AG.

– Release and disconnect the connector from the Vehicle GPS Antenna 1 - R259- .

The Vehicle GPS Antenna 1 - R259- -1- is secured on a connector bracket -2-.

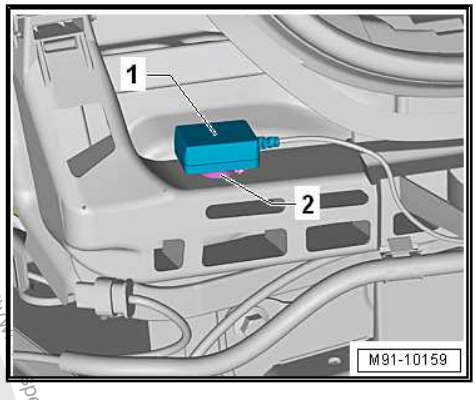

– Remove the Vehicle GPS Antenna 1 - R259- -1- with the connector bracket -2- using a suitable tool.

Installing

Install in reverse order of removal.

3.6.2 Vehicle GPS Antenna 2 - R260- , Removing and Installing, GSM

The Vehicle GPS Antenna 2 - R260- is located behind the left rear bumper cover.

Removing

– Turn off the ignition and all electrical equipment.

– Remove the ignition key, if equipped.

– Remove the rear bumper cover. Refer to ⇒ Body Exterior; Rep. Gr. 63 ; Rear Bumper; Bumper Cover, Removing and Installing .

– Release and disconnect the connector -2- from the Vehicle GPS Antenna 2 - R260- -1-.

– Remove the nut -3- on the Vehicle GPS Antenna 2 - R260- -1- and then remove the Vehicle GPS Antenna 2 - R260- .

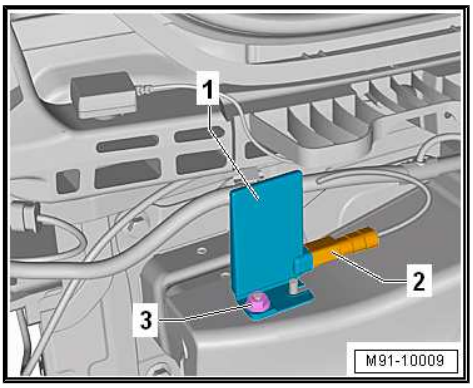

Installing

Install in reverse order of removal.

Tightening Specifications

Component	Tightening Specification
Nut -3- to Vehicle GPS Antenna 2 - R260-	6 Nm

Protected by copyright. Copyright by Volkswagen AG. Volkswagen AG does not guarantee or accept any liability with respect to the correctness of information in this document. Copying for private or commercial purposes, in part or in whole, is not permitted unless authorised by Volkswagen AG.

4 Radio

⇒ “4.1 Overview - Radio”, page 38

⇒ “4.2 Radio, Removing and Installing”, page 38

4.1 Overview - Radio

⇒ “4.1.1 Overview - Radio, Composition Media, I8D”, page 38

⇒ “4.1.2 Overview - Radio, Discover Pro, I8G”, page 38

4.1.1 Overview - Radio, Composition Media, I8D

The radio function is integrated in the Information Electronics Control Module 1 - J794- .

Fault finding is performed via `Guided Fault Finding` using the Vehicle Diagnostic Tester .

For additional information. Refer to
⇒ “1.1.1 General Information - Infotainment System, Composition Media (I8D) and Discover Media (7UF)”, page 4 .

4.1.2 Overview - Radio, Discover Pro, I8G

The radio function is integrated in the Information Electronics Control Module 1 - J794- .

Fault finding is performed via `Guided Fault Finding` using the Vehicle Diagnostic Tester .

For additional information. Refer to
⇒ “1.1.2 General Information - Infotainment System, Discover Pro (7UG)”, page 7 .

4.2 Radio, Removing and Installing

⇒ “4.2.1 Radio R Composition Media and Discover Pro, Removing and Installing”, page 38

4.2.1 Radio - R- Composition Media and Discover Pro, Removing and Installing

The radio is a component of the Information Electronics Control Module 1 - J794- and is located in the glove compartment.

– Remove the Information Electronics Control Module 1 - J794- . Refer to
⇒ “1.4 Information Electronics Control Module 1 J794 , Removing and Installing”, page 13 .

Protected by copyright. Copying for private or commercial purposes, in part or in whole, is not permitted unless authorised by Volkswagen AG. Volkswagen AG does not guarantee or accept any liability with respect to the correctness of information in this document. Copyright by Volkswagen AG.

5 Telephone System

⇒ “5.1 Cell Phone Preparation”, page 39

⇒ “5.2 Component Location Overview - Telephone System”, page 40

⇒ “5.3 Mobile Communication 2-Way Signal Amplifier J984 , Removing and Installing”, page 42

⇒ “5.4 Telephone Microphone R38 , Removing and Installing”, page 43

⇒ “5.5 Storage Compartment with Cell Phone Interface R265 , Removing and Installing”, page 44

5.1 Cell Phone Preparation

⇒ “5.1.1 Cell Phone Preparation, Bluetooth Hand-Free Calling, 9ZX”, page 39

5.1.1 Cell Phone Preparation, Bluetooth Hand-Free Calling, 9ZX

The Bluetooth® hands-free calling function is integrated in the Information Electronics Control Module 1 - J794- .

Bluetooth® is connected via the Cellular Telephone - R54- .

The Bluetooth Antenna - R152- is integrated in the Information Electronics Control Module 1 - J794- .

The hands-free calling consists of the following components:

- Front Information Display Control Head - J685-
- Information Electronics Control Module 1 - J794- with Bluetooth Antenna - R152-
- Storage Compartment with Cell Phone Interface - R265-
- Telephone Microphone - R38-

The Information Electronics Control Module 1 - J794- is part of the hands-free setup.

Fault finding is performed via `Guided Fault Finding` using the Vehicle Diagnostic Tester .

Antenna wires, repairing. Refer to ⇒ Electrical Equipment; Rep. Gr. 97 ; Antenna Wires, Repairing .

Notes on Bluetooth® Technology

A standardized radio connection is used to transfer data between the Information Electronics Control Module 1 - J794- and Cellular Telephone - R54- - Bluetooth® Technology.

An additional transmitter/receiver unit is installed in the Information Electronics Control Module 1 - J794- . A Bluetooth Antenna - R152- connects the Information Electronics Control Module 1 - J794- and the Cellular Telephone - R54- so that the Cellular Telephone - R54- can be operated without a wire connection.

The range is approximately 10 meters.

Protected by copyright. Copying for private or commercial purposes, in part or in whole, is not permitted unless authorised by Volkswagen AG. Volkswagen AG does not guarantee or accept any liability with respect to the correctness of information in this document. Copyright by Volkswagen AG.

5.2 Component Location Overview - Telephone System

⇒ “5.2.1 Component Location Overview - Telephone System, Sedan”, page 40

⇒ “5.2.2 Component Location Overview - Telephone System, Wagon”, page 41

mitted unless authorized by Volkswagen AG. Volkswagen AG does not guarantee or accept any liab

5.2.1 Component Location Overview - Telephone System, Sedan

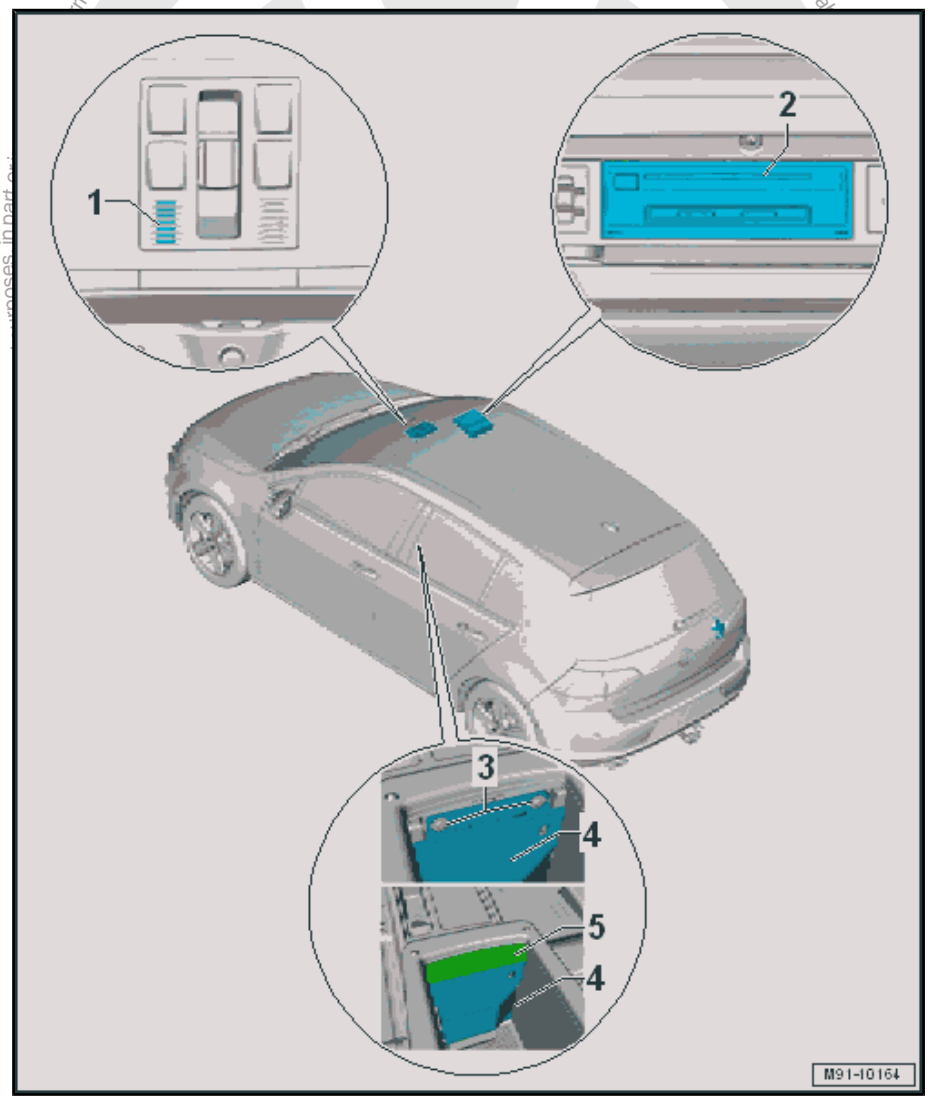

1 - Telephone Microphone - R38-

- ❑ In the Front Interior Lamp - W1-
- ❑ Removing and installing. Refer to ⇒ “5.4 Telephone Microphone R38 , Removing and Installing”, page 43 .

2 - Information Electronics Control Module 1 - J794-

- ❑ In the glove compartment
- ❑ Connector assignment. Refer to ⇒ Wiring diagrams, Troubleshooting & Component locations.
- ❑ Removing and installing. Refer to ⇒ “1.4 Information Electronics Control Module 1 J794 , Removing and Installing”, page 13 .

3 - Bolt

- ❑ 2 Nm
- ❑ Quantity: 2

4 - Storage Compartment with Cell Phone Interface - R265-

- ❑ Removing and installing. Refer to ⇒ “5.5 Storage Compartment with Cell Phone Interface R265 , Removing and Installing”, page 44 .

5 - Cover

No illustration:

- ♦ Mobile Communication 2-Way Signal Amplifier - J984- . Refer to ⇒ “5.3.1 Mobile Communication 2-Way Signal Amplifier J984 , Removing and Installing, Sedan”, page 42 .

5.2.2 Component Location Overview - Telephone System, Wagon

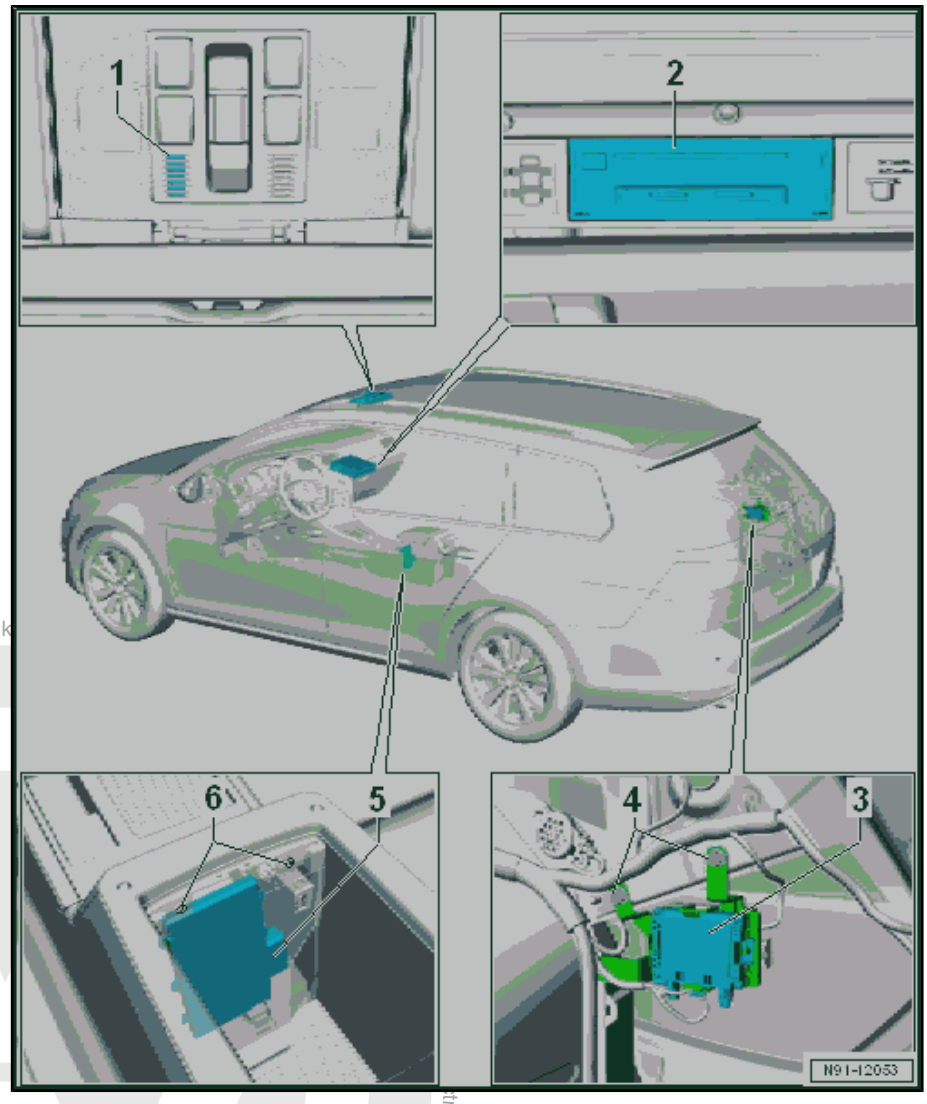

1 - Telephone Microphone - R38-

- ❑ In the Front Interior Lamp - W1-
- ❑ Removing and installing. Refer to ⇒ "5.4 Telephone Microphone R38 , Removing and Installing", page 43 .

2 - Information Electronics Control Module 1 - J794-

- ❑ In the glove compartment
- ❑ Connector assignment. Refer to ⇒ Wiring diagrams, Troubleshooting & Component locations.
- ❑ Removing and installing. Refer to ⇒ "1.4 Information Electronics Control Module 1 J794 , Removing and Installing", page 13 .

3 - Mobile Communication 2-Way Signal Amplifier - J984-

- ❑ Behind the luggage compartment trim panel on the right side
- ❑ Removing and installing. Refer to ⇒ "5.3.2 Mobile Communication 2-Way Signal Amplifier J984 , Removing and Installing, Wagon", page 42 .

4 - Bolt

- ❑ 2 Nm
- ❑ Quantity: 2

5 - Storage Compartment with Cell Phone Interface - R265-

- ❑ Removing and installing. Refer to ⇒ "5.5 Storage Compartment with Cell Phone Interface R265 , Removing and Installing", page 44 .

6 - Bolt

- ❑ 2 Nm
- ❑ Quantity: 2

Protected by copyright. Copyright by Volkswagen AG.
Copyright by Volkswagen AG. Protected by copyright. Copying for private or commercial purposes, in part or in whole, is not permitted unless authorised by Volkswagen AG. Volkswagen AG does not guarantee or accept any liability with respect to the correctness of information in this document.

5.3 Mobile Communication 2-Way Signal Amplifier - J984- , Removing and Installing

⇒ “5.3.1 Mobile Communication 2-Way Signal Amplifier J984 , Removing and Installing, Sedan”, page 42

⇒ “5.3.2 Mobile Communication 2-Way Signal Amplifier J984 , Removing and Installing, Wagon”, page 42

5.3.1 Mobile Communication 2-Way Signal Amplifier - J984- , Removing and Installing, Sedan

Removing

– Turn off the ignition and all electrical equipment.

– Remove the ignition key, if equipped.

– Remove the right luggage compartment side trim panel far enough, until the Mobile Communication 2-Way Signal Amplifier - J984- is accessible. Refer to ⇒ Body Interior; Rep. Gr. 70 ; Luggage Compartment Trim Panels; Luggage Compartment Side Trim Panel, Removing and Installing .

– Push the tabs in direction of -arrow A-.

– Remove the Mobile Communication 2-Way Signal Amplifier - J984- -1- from the bracket.

– Release and disconnect the connectors -2, 3 and 4- from the Mobile Communication 2-Way Signal Amplifier - J984- -1-.

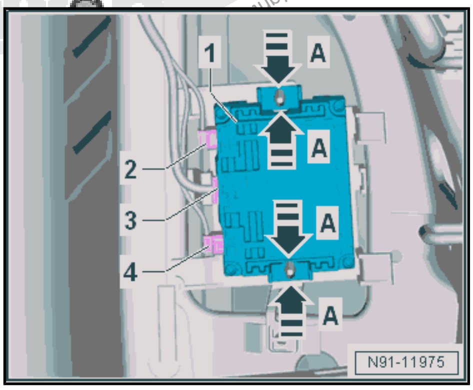

Installing

Install in reverse order of removal.

5.3.2 Mobile Communication 2-Way Signal Amplifier - J984- , Removing and Installing, Wagon

Removing

– Turn off the ignition and all electrical equipment.

– Then remove the ignition key, if equipped.

– Remove the right luggage compartment side trim panel far enough, until the Mobile Communication 2-Way Signal Amplifier - J984- is accessible. Refer to ⇒ Body Interior; Rep. Gr. 70 ; Luggage Compartment Trim Panels; Luggage Compartment Side Trim Panel, Removing and Installing .

Protected by copyright. Copying for private or commercial purposes, in part or in whole, is not permitted unless authorised by Volkswagen AG. Volkswagen AG does not guarantee or accept any liability with respect to the correctness of information in this document. Copyright by Volkswagen AG.

– If necessary, cut the cable tie on the bracket -3-.
– Push the catches -2 and 5- in the direction of the -arrows A and B-.
– Remove the Mobile Communication 2-Way Signal Amplifier - J984- -1- from the bracket.
– Release and disconnect the connectors -4- from the Mobile Communication 2-Way Signal Amplifier - J984- -1-.

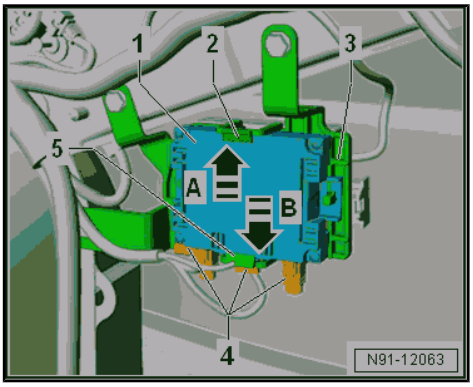

– Remove the bolts -2-.
– Remove the bracket for the Mobile Communication 2-Way Signal Amplifier - J984- -1- from the sidewall.
– If installed, release and disconnect the connectors from the Parking Heater Radio Receiver - R64- -3-.
– If installed, remove the Parking Heater Radio Receiver - R64- from the bracket for the Mobile Communication 2-Way Signal Amplifier - J984- .

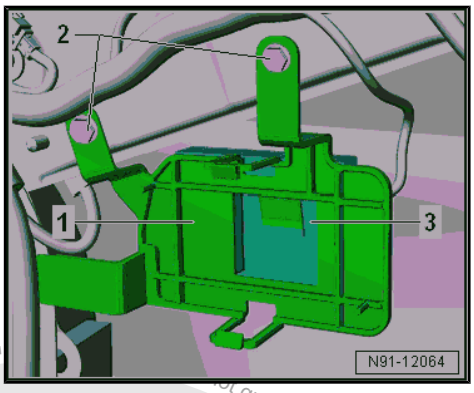

Installing

Install in reverse order of removal. Note the following:

Tightening Specifications

◆ Refer to
⇒ “5.2.2 Component Location Overview - Telephone System, Wagon”, page 41

5.4 Telephone Microphone - R38- , Removing and Installing

Removing

– Turn off the ignition and all electrical equipment.
– Remove the ignition key, if equipped.
– Remove the Front Interior Lamp - W1- . Refer to ⇒ Electrical Equipment; Rep. Gr. 96 ; Controls; Front Interior Lamp/Reading Lamp, Removing and Installing .
– Release the hooks -arrows-.
– Remove the Telephone Microphone - R38- -1- from the Front Interior Lamp - W1- .

Installing

Install in reverse order of removal.

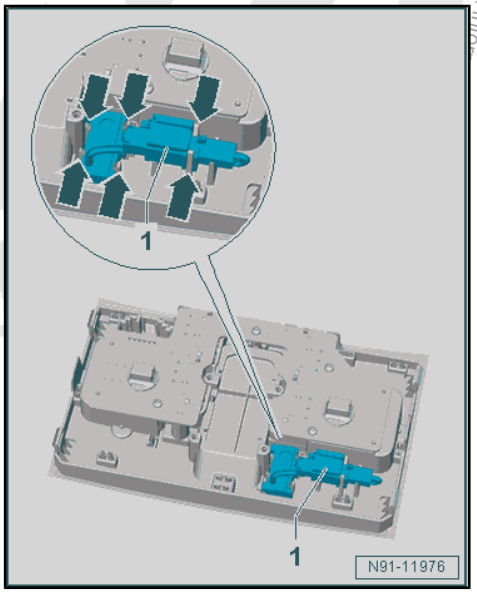

Protected by copyright. Copying for private or commercial purposes, in part or in whole, is not permitted unless authorised by Volkswagen AG. We do not guarantee or accept any liability with respect to the correctness of info

5.5 Storage Compartment with Cell Phone Interface - R265- , Removing and Installing

Special tools and workshop equipment required

- Trim Removal Wedge - 3409-
- Torque Wrench 1783 - 2-10Nm - VAG1783-

Removing

– Turn off the ignition and all electrical equipment.

– Remove the ignition key, if equipped.

> **Caution**
>
> *Risk of damaging the component surfaces.*
>
> - *When positioning a prying tool, put commercially available adhesive tape over the component in the visible area.*

– Fold the center console armrest up.

– Pry off the cover -3- using the Trim Removal Wedge - 3409- .

– Remove the bolts -1-.

– Remove the mounting plate -2- from the storage compartment in direction of -arrow A-.

– Release and disconnect the connectors.

– Remove the coupler antenna on the back of the mounting plate downward.

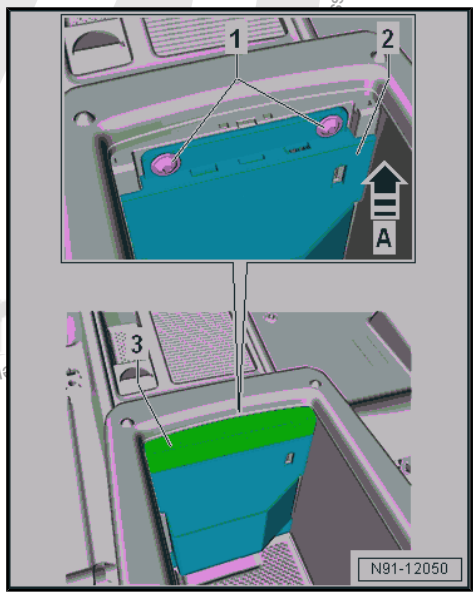

Installing

Install in reverse order of removal.

Tightening Specifications

- Refer to ⇒ “5.2 Component Location Overview - Telephone System”, page 40

Protected by copyright. Copying for private or commercial purposes, in part or in whole, is not permitted unless authorised by Volkswagen AG. Volkswagen AG does not guarantee or accept any liability with respect to the correctness

6 Navigation System

⇒ “6.1 Overview - Navigation System”, page 45

⇒ “6.2 Component Location Overview - Navigation System”, page 45

⇒ “6.3 Navigation System Control Module, Removing and Installing”, page 47

⇒ “6.5 GPS Relay J1028 , Removing and Installing”, page 48

6.1 Overview - Navigation System

The navigation system is available on vehicles with Discover Media (7UF) and Discover Pro (7UG).

The navigation function is integrated in the Information Electronics Control Module 1 - J794- .

For Discover Media, the navigation data is stored on a SD card, and for Discover Pro it is stored on an internal hard drive.

Fault finding is performed via `Guided Fault Finding` using the Vehicle Diagnostic Tester .

6.2 Component Location Overview - Navigation System

⇒ “6.2.1 Component Location Overview - Navigation System, Sedan”, page 45

⇒ “6.2.2 Component Location Overview - Navigation System, Wagon”, page 47

6.2.1 Component Location Overview - Navigation System, Sedan

© Copyright by Volkswagen AG. Volkswagen AG does not guarantee or accept any liability with respect to the correctness of information in this document. Copyright by Volkswagen AG. Protected by copyright. Copying for private or commercial purposes, in part or in whole, is not permitted unless authorised by Volkswagen AG.

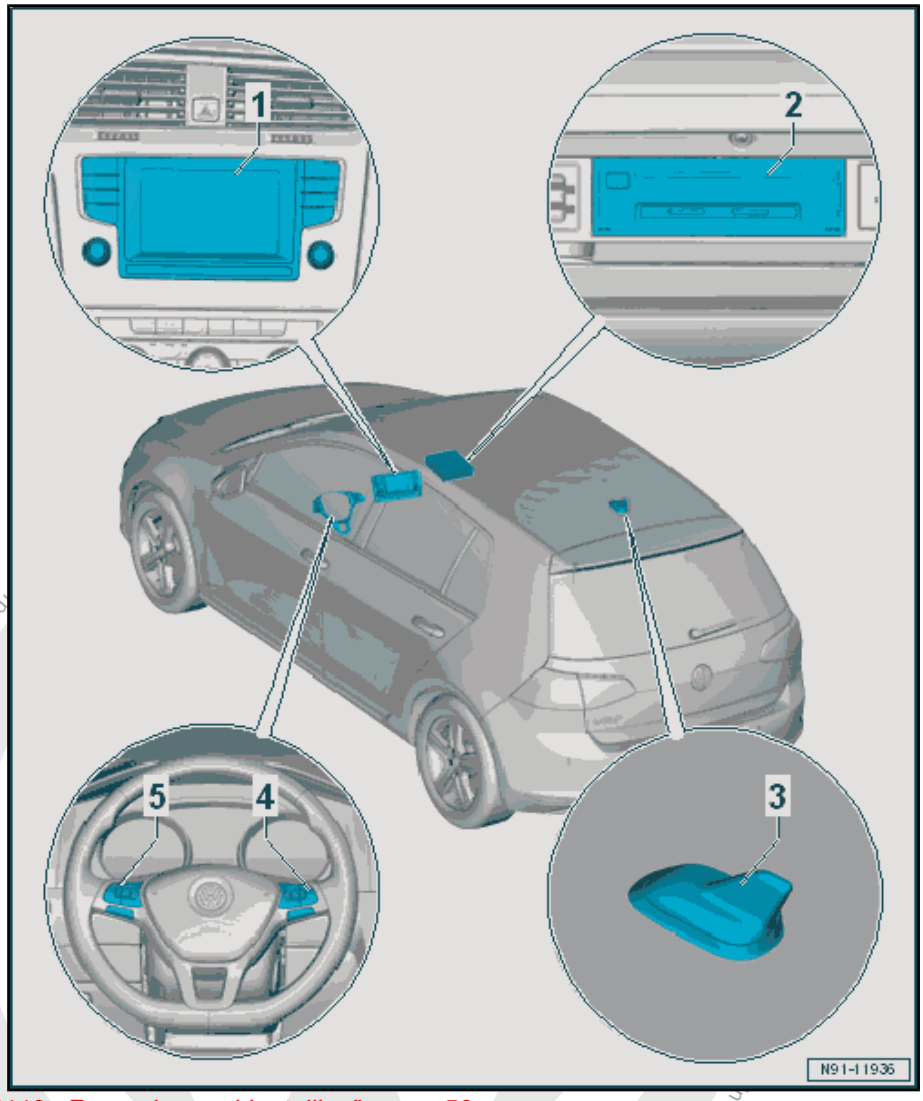

1 - Front Information Display Control Head - J685-

- ❑ Inside the center of the instrument panel
- ❑ Removing and installing. Refer to ⇒ “1.3 Infotainment System Display, Removing and Installing”, page 12 .

2 - Information Electronics Control Module 1 - J794-

- ❑ In the glove compartment
- ❑ Connector assignment. Refer to ⇒ Wiring diagrams, Troubleshooting & Component locations.
- ❑ Removing and installing. Refer to ⇒ “1.4 Information Electronics Control Module 1 J794 , Removing and Installing”, page 13 .

3 - Roof Antenna - RX5-

- ❑ Removing and installing. Refer to ⇒ “3.5 Roof Antenna, Removing and Installing”, page 35 .

4 - Right Multifunction Buttons On Steering Wheel - E441-

- ❑ Removing and installing. Refer to ⇒ “8.3 Right/Left Multifunction Buttons On Steering Wheel E441 / E440 , Removing and Installing”, page 56 .

5 - Left Multifunction Buttons On Steering Wheel - E440-

- ❑ Removing and installing. Refer to ⇒ “8.3 Right/Left Multifunction Buttons On Steering Wheel E441 / E440 , Removing and Installing”, page 56 .

Protected by copyright. Copyright by Volkswagen AG.

Private or commercial purposes in part or in whole is not permitted unless authorised by Volkswagen AG. Volkswagen AG does not guarantee or accept any liability

6.2.2 Component Location Overview - Navigation System, Wagon

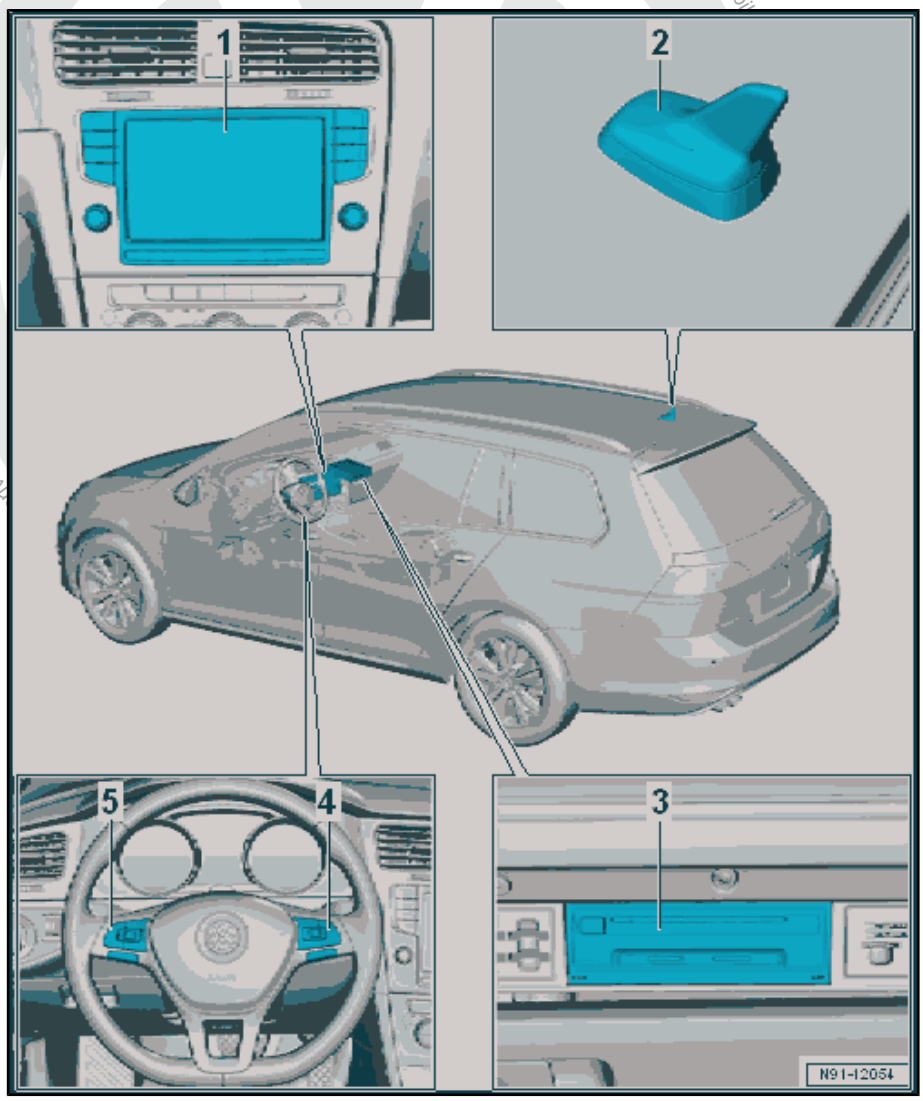

1 - Front Information Display Control Head - J685-

- ❑ Inside the center of the instrument panel
- ❑ Removing and installing. Refer to ⇒ "1.3 Infotainment System Display, Removing and Installing", page 12 .

2 - Roof Antenna - RX5-

- ❑ Removing and installing. Refer to ⇒ "3.5 Roof Antenna, Removing and Installing", page 35 .

3 - Information Electronics Control Module 1 - J794-

- ❑ In the glove compartment
- ❑ Connector assignment. Refer to ⇒ Wiring diagrams, Troubleshooting & Component locations.
- ❑ Removing and installing. Refer to ⇒ "1.4 Information Electronics Control Module 1 J794 , Removing and Installing", page 13 .

4 - Right Multifunction Buttons On Steering Wheel - E441-

- ❑ Removing and installing. Refer to ⇒ "8.3 Right/Left Multifunction Buttons On Steering Wheel E441 / E440 , Removing and Installing", page 56 .

5 - Left Multifunction Buttons On Steering Wheel - E440-

- ❑ Removing and installing. Refer to ⇒ "8.3 Right/Left Multifunction Buttons On Steering Wheel E441 / E440 , Removing and Installing", page 56 .

6.3 Navigation System Control Module, Removing and Installing

The navigation function from the navigation system control module is integrated in the Information Electronics Control Module 1 - J794- .

– Remove the Information Electronics Control Module 1 - J794- . Refer to ⇒ "1.4 Information Electronics Control Module 1 J794 , Removing and Installing", page 13 .

6.4 Anti-Theft Protection and GPS Control Module, Removing and Installing

The Anti-Theft Protection and GPS Control Module - J961- is located behind the left luggage compartment side trim panel.

Removing

– Turn off the ignition and all electrical equipment.

– Remove the ignition key, if equipped.

– Remove the luggage compartment left trim panel. Refer to ⇒ Body Interior; Rep. Gr. 70 ; Luggage Compartment Side Trim Panels; Luggage Compartment Side Trim Panel, Removing and Installing .

– Remove the expanding rivet -2- and remove the Anti-Theft Protection and GPS Control Module - J961- -1- from the bracket. Pay attention to the notch -arrow-.

– Release and disconnect the connectors -3 and 4- from the Anti-Theft Protection and GPS Control Module - J961- -1-.

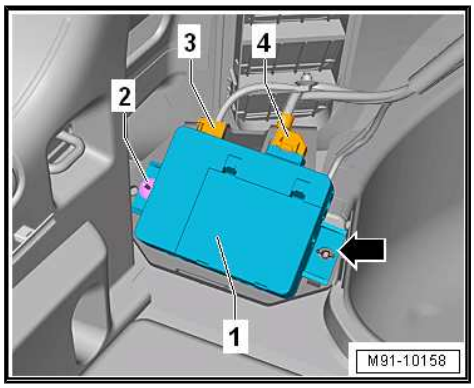

Installing

Install in reverse order of removal.

6.5 GPS Relay - J1028- , Removing and Installing

The GPS Relay - J1028- is located behind the Instrument Cluster - KX2- on the left side.

Removing

– Turn off the ignition and all electrical equipment.

– Remove the ignition key, if equipped.

– Remove the Instrument Cluster - KX2- . Refer to ⇒ Electrical Equipment; Rep. Gr. 90 ; Instrument Cluster; Instrument Cluster - KX2- ; Removing and Installing .

– Remove the bolt -3- on the bracket -2- and remove the GPS Relay - J1028- -1-.

– Release and disconnect the connector from the GPS Relay - J1028- -1-.

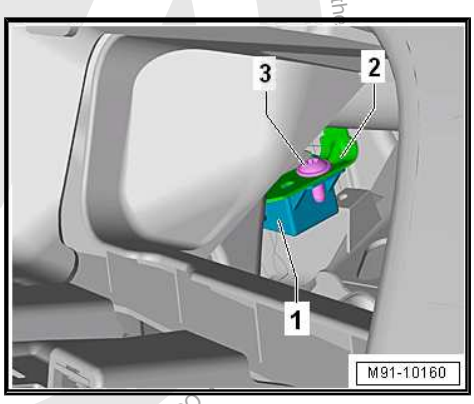

Installing

Install in reverse order of removal.

Protected by copyright. Copying for private or commercial purposes, in part or whole, is not permitted unless authorised by Volkswagen AG. Volkswagen AG does not guarantee or accept any liability with respect to the
Copyright by Volkswagen AG.

7 Rearview Camera System

⇒ “7.1 System Overview - Rearview Camera”, page 49

⇒ “7.2 Component Location Overview - Rearview Camera System”, page 49

⇒ “7.3 Overview - Rearview Camera System”, page 52

⇒ “7.4 Rearview Camera R189 , Removing and Installing”, page 52

7.1 System Overview - Rearview Camera

The rear view camera system assists the driver during back-up driving by providing the driver with an image of the traffic situation behind the vehicle via the Front Information Display Control Head - J685- .

The rear view camera system is switched on when engaging the reverse gear.

The rear view camera system consists of the following components:

- the pivoting emblem with the Rearview Camera - R189- and pivoting motor
- Information Electronics Control Module 1 - J794-
- Front Information Display Control Head - J685-

Fault finding is performed via `Guided Fault Finding` using the Vehicle Diagnostic Tester .

7.2 Component Location Overview - Rearview Camera System

⇒ “7.2.1 Component Location Overview - Rearview Camera System, Sedan”, page 49

⇒ “7.2.2 Component Location Overview - Rearview Camera System, Wagon”, page 51

7.2.1 Component Location Overview - Rearview Camera System, Sedan

Copyright by Volkswagen AG. Volkswagen AG does not guarantee or accept any liability with respect to the correctness of information in this document. Copyright by Volkswagen AG. Protected by copyright. Copying for private or commercial purposes, in part or in whole, is not permitted unless authorised by Volkswagen AG.

1 - Front Information Display Control Head - J685-

- ❑ In the front center console
- ❑ Removing and installing. Refer to ⇒ “1.3 Infotainment System Display, Removing and Installing”, page 12 .

2 - Information Electronics Control Module 1 - J794-

- ❑ In the glove compartment
- ❑ Connector assignment. Refer to ⇒ Wiring diagrams, Troubleshooting & Component locations.
- ❑ Removing and installing. Refer to ⇒ “1.4 Information Electronics Control Module 1 J794 , Removing and Installing”, page 13 .

3 - Rearview Camera - R189-

- ❑ Pivoting emblem with Rearview Camera - R189- and pivoting motor in the rear lid
- ❑ Removing and installing. Refer to ⇒ “7.4 Rearview Camera R189 , Removing and Installing”, page 52 .

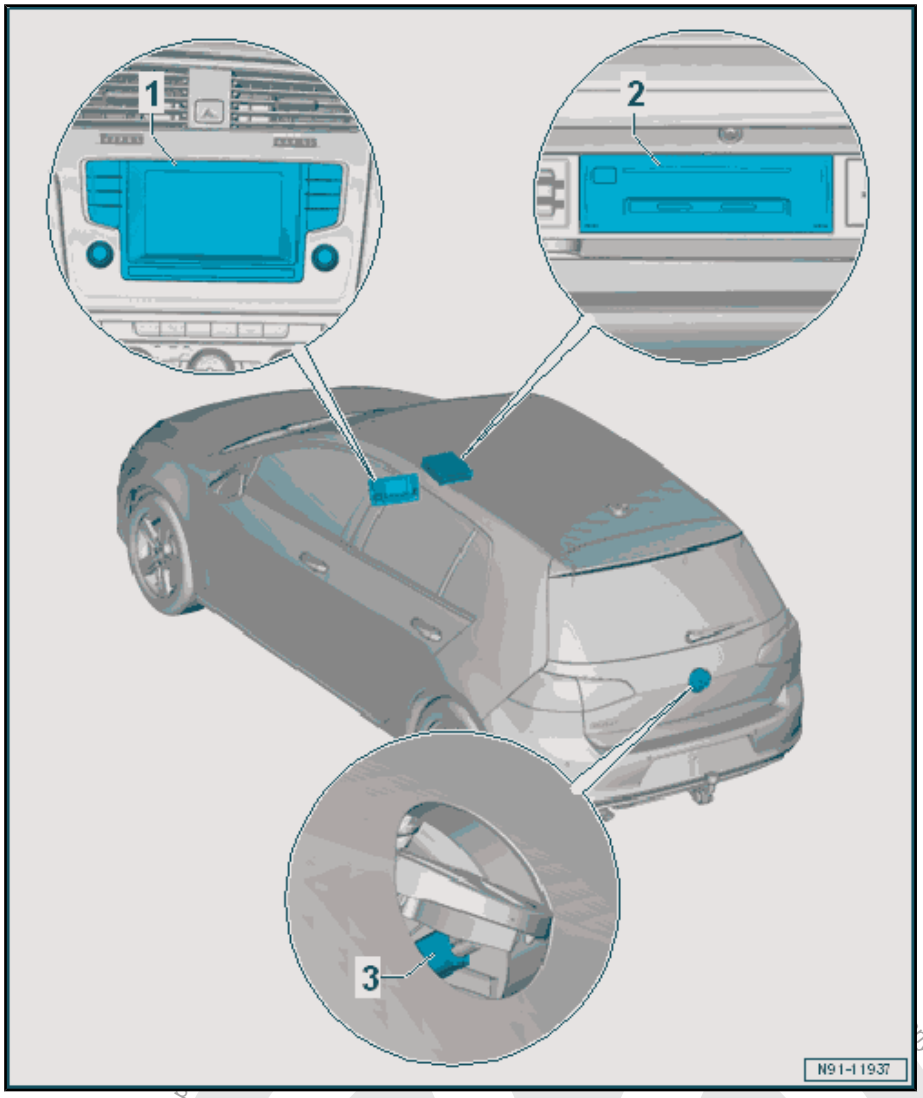

Protected by copyright. Copying for private or commercial purposes, in part or in whole, is not p... ...y liability with respect to the correctness of information in this document. Copyright by Volkswagen AG.

7.2.2 Component Location Overview - Rearview Camera System, Wagon

1 - Front Information Display Control Head - J685-

- ❑ In the front center console
- ❑ Removing and installing. Refer to ⇒ "1.3 Infotainment System Display, Removing and Installing", page 12 .

2 - Information Electronics Control Module 1 - J794-

- ❑ In the glove compartment
- ❑ Connector assignment. Refer to ⇒ Wiring diagrams, Troubleshooting & Component locations.
- ❑ Removing and installing. Refer to ⇒ "1.4 Information Electronics Control Module 1 J794 , Removing and Installing", page 13 .

3 - Rearview Camera - R189-

- ❑ Pivoting emblem with Rearview Camera - R189- and pivoting motor in the rear lid
- ❑ Removing and installing. Refer to ⇒ "7.4 Rearview Camera R189 , Removing and Installing", page 52 .

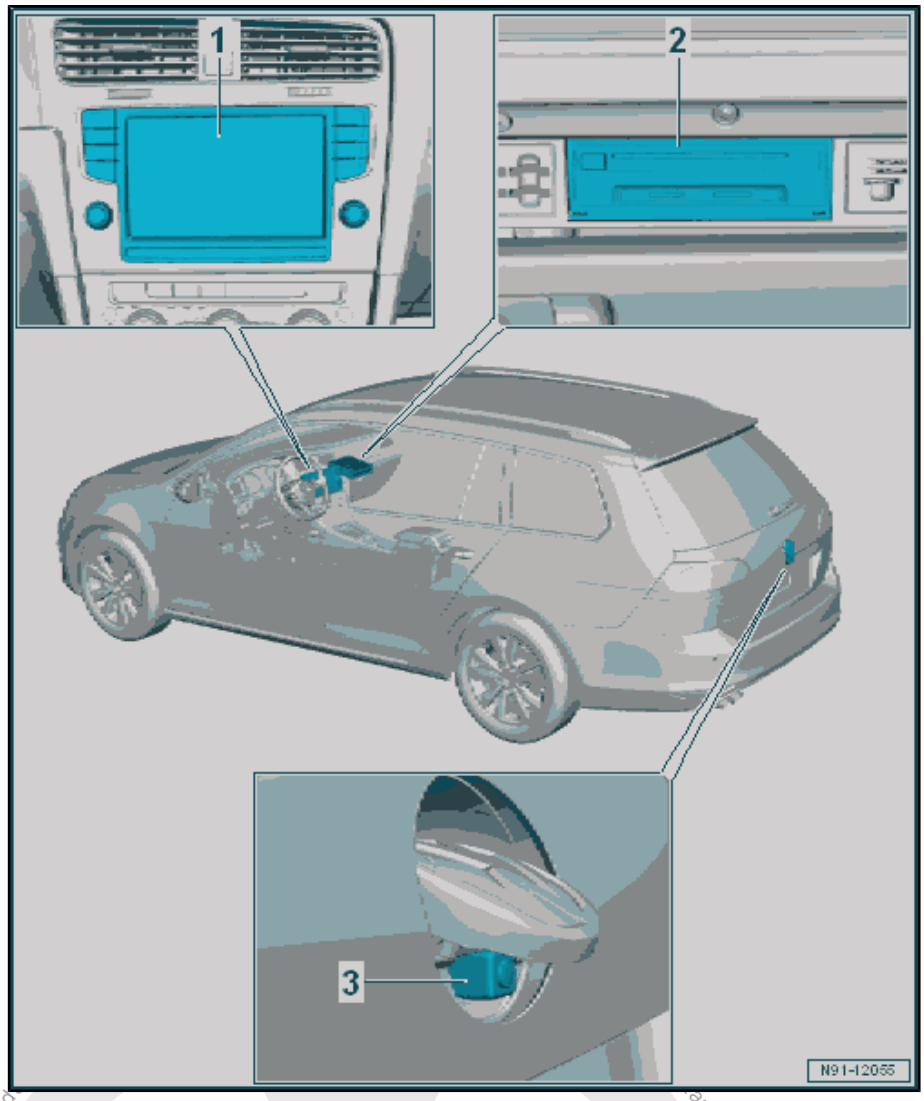

Protected by copyright. Copying for private or commercial purposes, in part or in whole, is not permitted. Copyright by Volkswagen AG. any liability with respect to the correctness of information in this document.

7.3 Overview - Rearview Camera System

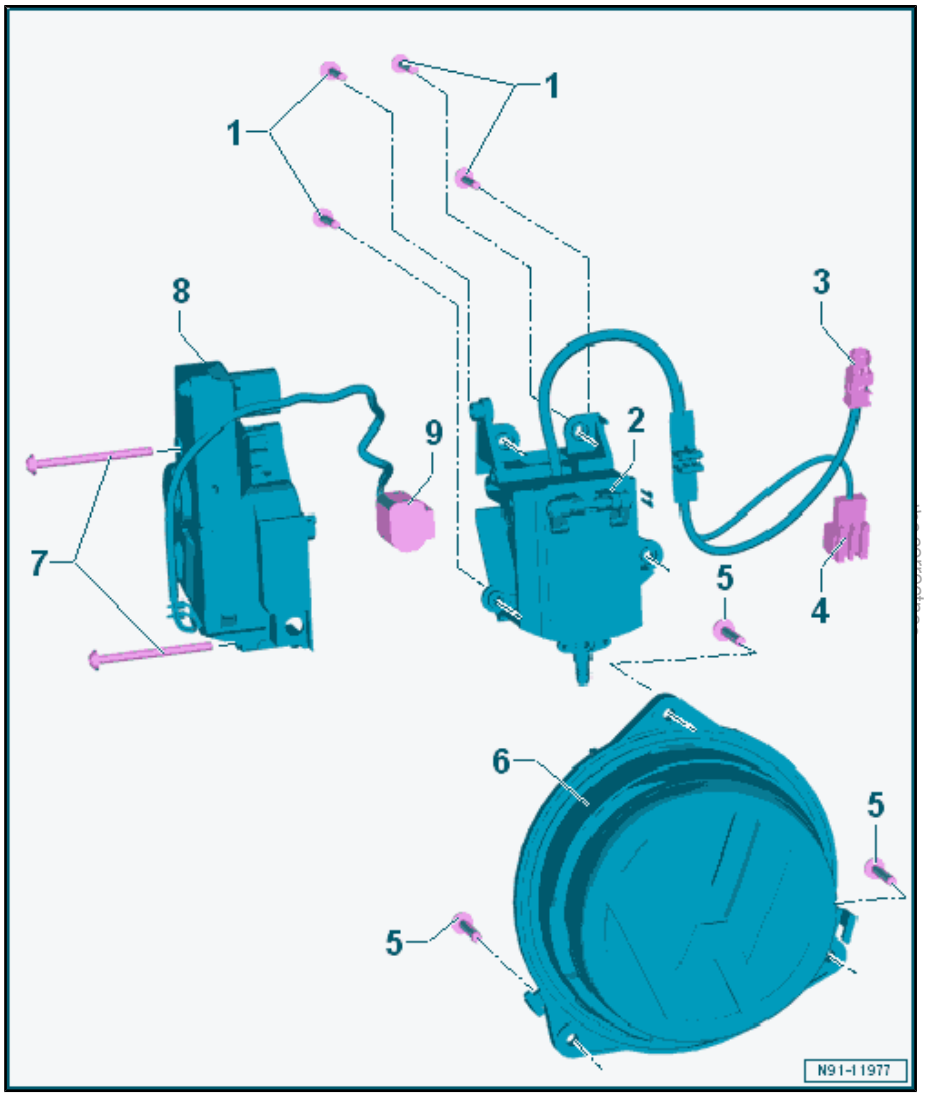

1 - Screw

- ❑ 3 Nm
- ❑ Quantity: 4

2 - Rearview Camera Housing

- ❑ Removing and installing. Refer to ⇒ page 53

3 - Connector

4 - Connector

5 - Screw

- ❑ Quantity: 3
- ❑ Tightening specification. Refer to ⇒ Body Exterior; Rep. Gr. 55 ; Rear Lid; Overview - Rear Lid .

6 - Pivoting Emblem with Rearview Camera - R189-

- ❑ Removing and installing. Refer to ⇒ Body Exterior; Rep. Gr. 55 ; Rear Lid; Mechanism, Removing and Installing .

7 - Screw

- ❑ 2 Nm
- ❑ Quantity: 2

8 - Pivoting Motor

- ❑ Removing and installing. Refer to ⇒ page 53

9 - Connector

7.4 Rearview Camera - R189- , Removing and Installing

Special tools and workshop equipment required

- ♦ Torque Wrench 1783 - 2-10Nm - VAG1783-

The rear view camera and pivoting motor are installed in individual housings in the rear lid pivoting emblem. To remove the camera housing, both components and the pivoting emblem must be removed from the rear lid first. Then the camera housing, the pivoting motor and pivoting emblem can be removed and the camera housing can be separated from the pivoting motor. The camera is not designed to be removed from the camera housing.

- ♦ Removing and installing the pivoting emblem with the rearview camera and pivoting motor from the rear lid. Refer to ⇒ Body Exterior; Rep. Gr. 55 ; Rear Lid; Mechanism, Removing and Installing .
- ♦ Rearview camera housing with pivoting motor, removing from pivoting emblem and installing. Refer to ⇒ page 53 .

- Rearview camera housing, disconnecting from the pivoting motor. Refer to ⇒ page 53 .

Rearview Camera Housing with Pivoting Motor, Removing from Pivoting Emblem and Installing

Removing

– Remove the pivoting emblem with the rearview camera and pivoting motor from the rear lid. Refer to ⇒ Body Exterior; Rep. Gr. 55 ; Rear Lid; Mechanism, Removing and Installing .

– Release and disconnect the connector -5-.

– Remove bolts -arrows-.

– Remove the rearview camera housing -2- together with the pivoting motor -3- from the pivoting emblem -4-.

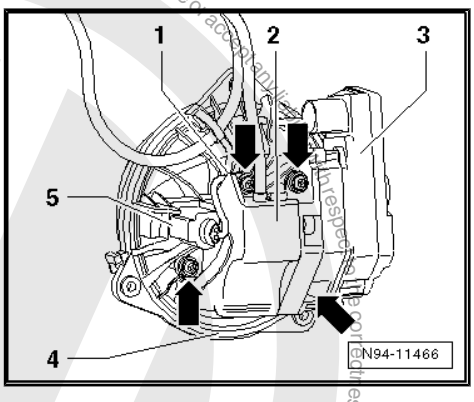

Installing

Install in reverse order of removal. Note the following:

> **Caution**
>
> - *Risk of leaks*
> - *Water could enter the luggage compartment if the seals are twisted or are not positioned correctly.*
> - *Make sure the installed seal is in good condition and installed correctly.*

– Check the seal between the camera and pivoting emblem and make sure it is not loose or turned.

– Insert the pivoting motor wire into the wiring guide -1- for the rearview camera housing -2-.

– Insert the rearview camera housing -2- together with the pivoting motor -3- into the pivoting emblem -4-.

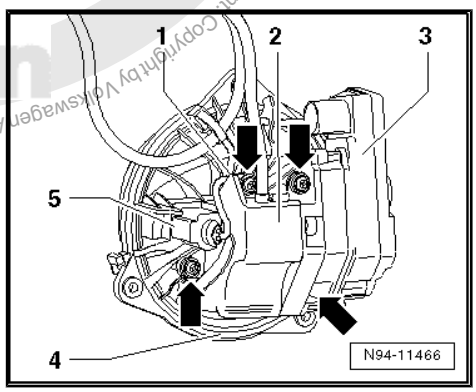

> **Caution**
>
> - *The pivoting mechanism may be difficult to move.*
> - *The bolt in the pivoting motor that is difficult to access -lower right arrow- may fall out when inserting it in the rear view camera housing.*
> - *The pivoting emblem must be held so that the pivoting motor -3- is at the bottom when positioning the bolts.*

– Install the bolts -arrows-.

– Install the pivoting emblem with the rearview camera and pivoting motor in the rear lid. Refer to ⇒ Body Exterior; Rep. Gr. 55 ; Rear Lid; Mechanism, Removing and Installing .

Tightening Specifications

- Refer to
⇒ “7.3 Overview - Rearview Camera System”, page 52

Rearview Camera Housing, Disconnecting from Pivoting Motor

Special tools and workshop equipment required

- Torque Wrench 1783 - 2-10Nm - VAG1783-

Protected by copyright. Copying for private or commercial purposes, in part or in whole, is not permitted unless authorised by Volkswagen AG. Volkswagen AG does not guarantee or accept any liability with respect to the correctness of information in this document. Copyright by Volkswagen AG.

Removing

– Rearview camera housing with pivoting motor, removing from pivoting emblem. Refer to ⇒ page 53 .

– Remove the bolts -2-.

– Carefully separate the rearview camera housing from the pivoting motor.

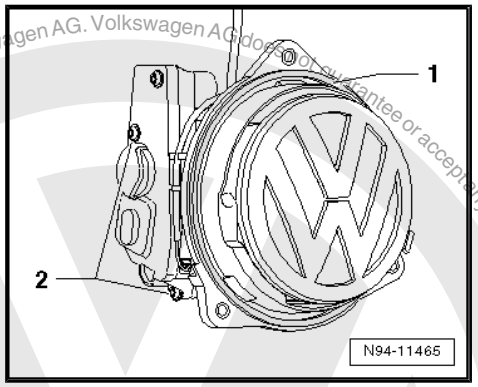

Installing

Install in reverse order of removal. Note the following:

– Check if the release lever and the sliding surface on the pivoting motor are sufficiently lubricated with grease.

– Connect the rearview camera housing and the pivoting motor.

– Install the bolts.

– Install the rear view camera housing with the pivoting motor in the pivoting emblem. Refer to ⇒ page 53 .

Tightening Specifications

♦ Refer to
⇒ “7.3 Overview - Rearview Camera System”, page 52

Protected by copyright. Copying for private or commercial purposes, in part or in whole, is not permitted unless authorised by Volkswagen AG. Volkswagen AG does not guarantee or accept any liability with respect to the correctness of information in this document. Copyright by Volkswagen AG.

8 Multifunction Steering Wheel

⇒ “8.1 Overview - Multifunction Steering Wheel”, page 55

⇒ “8.2 Overview - Multifunction Steering Wheel”, page 55

⇒ “8.3 Right/Left Multifunction Buttons On Steering Wheel E441 / E440 , Removing and Installing”, page 56

⇒ “8.4 Tiptronic Downshift Button on Steering Wheel E439 / Tiptronic Upshift Button on Steering Wheel E438 , Removing and Installing”, page 58

8.1 Overview - Multifunction Steering Wheel

Buttons are integrated in the steering wheel for easier operation of the Infotainment system, telephone, navigation, cruise control system and vehicle menus. On vehicles with Tiptronic, rocker switches are also installed on the left and right.

The Multifunction Steering Wheel Control Module - J453- (Left Multifunction Buttons on Steering Wheel - E440-) reads out the button information and transfers it over the LIN Bus to the Steering Column Electronics Control Module - J527- . From the Steering Column Electronics Control Module - J527- , the information is transferred to the individual components via the CAN Bus (comfort) and the Data Bus On Board Diagnostic Interface - J533- .

Fault finding is performed via `Guided Fault Finding` using the Vehicle Diagnostic Tester .

8.2 Overview - Multifunction Steering Wheel

Protected by copyright. Copying for private or commercial purposes, in part or in whole, is not permitted unless authorised by Volkswagen AG. Volkswagen AG does not guarantee or accept any liability with respect to the correctness of information in this document. Copyright by Volkswagen AG.

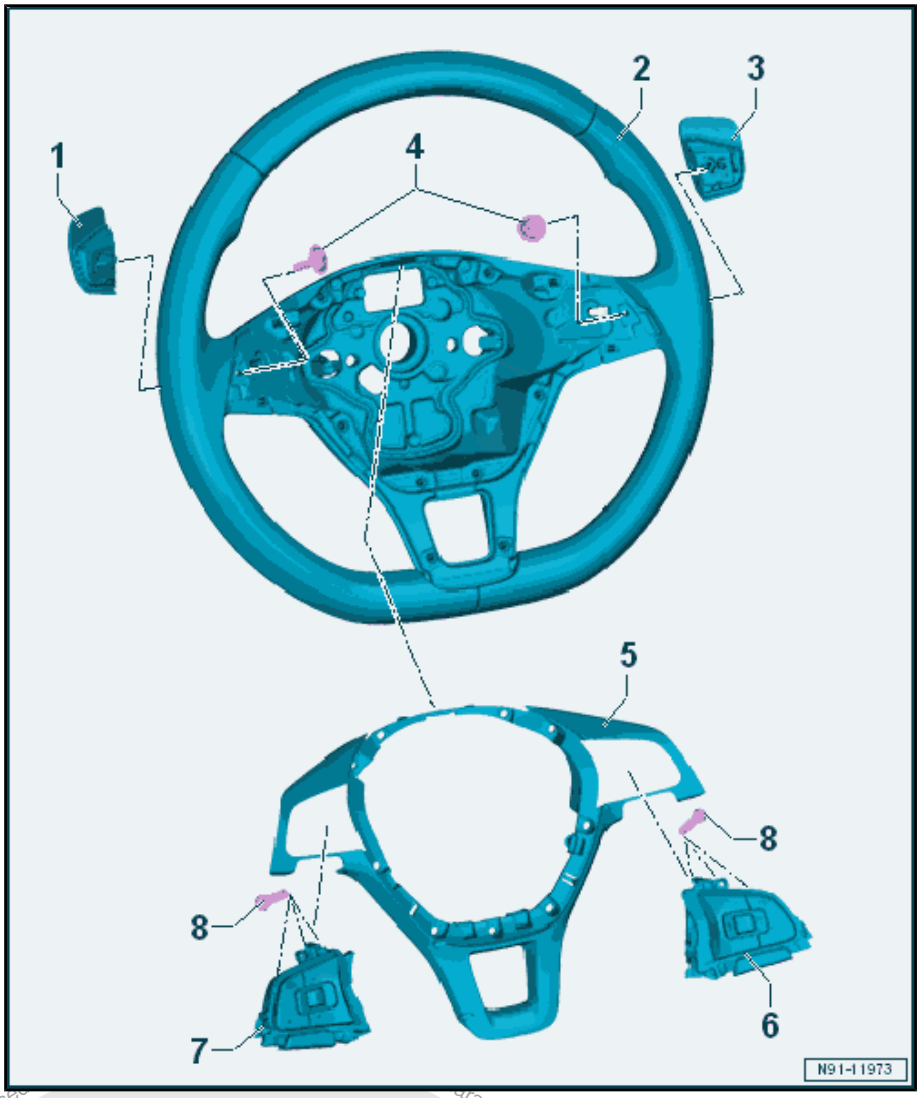

1 - Tiptronic Downshift Button on Steering Wheel - E439-

- ❑ Removing and installing. Refer to ⇒ "8.4 Tiptronic Downshift Button on Steering Wheel E439 / Tiptronic Upshift Button on Steering Wheel E438 , Removing and Installing", page 58 .

2 - 3-Spoke Steering Wheel

3 - Tiptronic Upshift Button on Steering Wheel - E438-

- ❑ Removing and installing. Refer to ⇒ "8.4 Tiptronic Downshift Button on Steering Wheel E439 / Tiptronic Upshift Button on Steering Wheel E438 , Removing and Installing", page 58 .

4 - Screw

- ❑ 1 Nm
- ❑ Quantity: 2

5 - Trim Molding

6 - Right Multifunction Buttons On Steering Wheel - E441-

- ❑ Removing and installing. Refer to ⇒ "8.3 Right/Left Multifunction Buttons On Steering Wheel E441 / E440 , Removing and Installing", page 56 .

7 - Left Multifunction Buttons On Steering Wheel - E440-

- ❑ Removing and installing. Refer to ⇒ "8.3 Right/Left Multifunction Buttons On Steering Wheel E441 / E440 , Removing and Installing", page 56 .

8 - Screw

- ❑ 1 Nm
- ❑ Quantity: 6

8.3 Right/Left Multifunction Buttons On Steering Wheel -E441- / -E440- , Removing and Installing

Special tools and workshop equipment required

- ♦ Trim Removal Wedge - 3409- quantity: 2
- ♦ Lever - Fuel Line - T10468-
- ♦ Door Trim Pliers - 3392-
- ♦ Torque Screwdriver - VAS6494-

Protected by copyright. Copyright by Volkswagen AG.

Removing

Note

The multifunction buttons are attached with the trim molding. The trim molding and the multifunction buttons are attached to the steering wheel. The trim can be easily removed with the help of a second Trim Removal Wedge - 3409- .

– Turn off the ignition and all electrical equipment.

– Remove the ignition key, if equipped.

– Remove the driver side airbag. Refer to ⇒ Body Interior; Rep. Gr. 69 ; Driver Side Airbag; Overview - Driver Side Airbag .

The trim molding is locked in place in the areas near the -arrows- in the multifunction steering wheel.

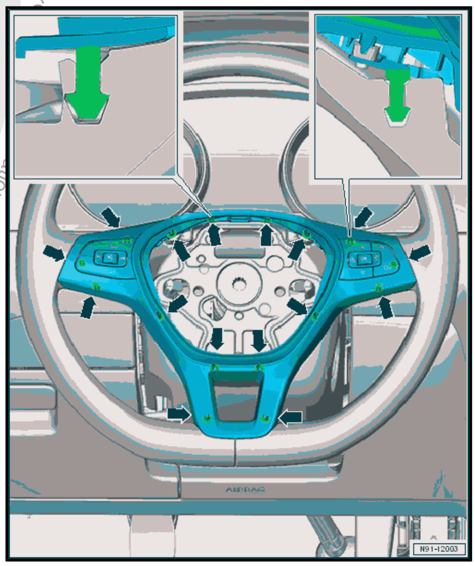

– Loosen the trim molding -1- near the -arrows A and B- from the steering wheel using the Trim Removal Wedge - 3409- .

– Loosen the trim molding -1- near the Left Multifunction Buttons on Steering Wheel - E440- -2- and Right Multifunction Buttons on Steering Wheel - E441- -3- using the Lever - Fuel Line - T10468- .

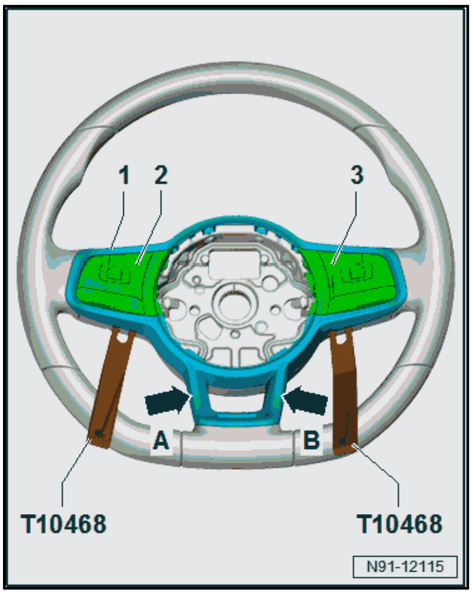

Protected by copyright. Copying for private or commercial purposes, in part or in whole, is not permitted unless authorised by Volkswagen AG. Volkswagen AG does not guarantee or accept any liability with respect to the correctness of information in this document. Copyright by Volkswagen AG.

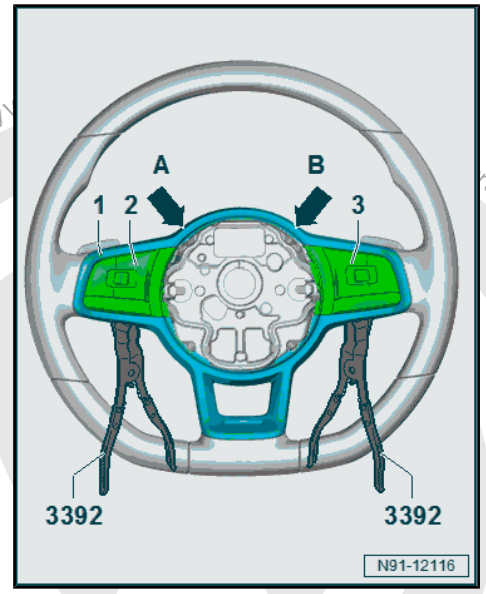

– Remove the trim molding -1- near the Left Multifunction Buttons on Steering Wheel - E440- -2- and Right Multifunction Buttons on Steering Wheel - E441- -3- using the Door Trim Pliers - 3392- .

– Remove the trim molding -1- near the -arrows A and B- from the steering wheel.

– Release and disconnect the connectors.

– Remove the trim molding -1- with the Left Multifunction Buttons on Steering Wheel - E440- -2- and Right Multifunction Buttons on Steering Wheel - E441- -3-.

– Remove the bolts for the Left Multifunction Buttons on Steering Wheel - E440- -2- and Right Multifunction Buttons on Steering Wheel - E441- -3- on the back of the trim molding -1-.

– Remove the Left Multifunction Buttons on Steering Wheel - E440- -2- and Right Multifunction Buttons on Steering Wheel - E441- -3- from the trim molding -1-.

Installing

Install in reverse order of removal. Note the following:

Note

For a better installation, clip in the trim starting from the bottom.

Tightening Specifications

♦ Refer to
⇒ “8.2 Overview - Multifunction Steering Wheel”, page 55

8.4 Tiptronic Downshift Button on Steering Wheel - E439- / Tiptronic Upshift Button on Steering Wheel - E438- , Removing and Installing

Special tools and workshop equipment required

♦ Torque Wrench 1783 - 2-10Nm - VAG1783-

Removing

The removal and installation is described for the left side. Removing and installing on the right side is identical.

– Turn off the ignition and all electrical equipment.

– Remove the ignition key, if equipped.

– Remove the Right Multifunction Buttons on Steering Wheel - E441- / Left Multifunction Buttons on Steering Wheel - E440- . Refer to
⇒ “8.3 Right/Left Multifunction Buttons On Steering Wheel E441 / E440 , Removing and Installing”, page 56 .

Protected by copyright. Copying for private or commercial purposes, in part or in whole, is not permitted unless authorised by Volkswagen AG. Copyright by Volkswagen AG. We accept any liability with respect to the correctness of information in this document.

– Remove the bolt -1- on the steering wheel.

– Remove the Tiptronic switch -2- with the connecting cable toward the rear.

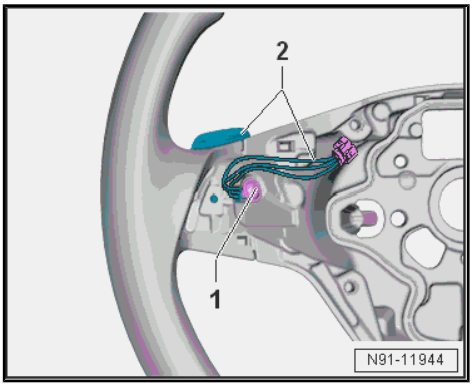

Installing

Install in reverse order of removal.

Tightening Specifications

♦ Refer to
⇒ “8.2 Overview - Multifunction Steering Wheel”, page 55

Protected by copyright. Copying for private or commercial purposes, in part or in whole, is not permitted unless authorised by Volkswagen AG. Volkswagen AG does not guarantee or accept any liability with respect to the correctness of information in this document. Copyright by Volkswagen AG.

Protected by copyright. Copying for private or commercial purposes, in part or in whole, is not permitted unless authorised by Volkswagen AG. Volkswagen AG does not guarantee or accept any liability with respect to the correctness of information in this document. Copyright by Volkswagen AG.

9 Connection for External Multimedia Devices

⇒ “9.1 Overview - Connection for External Multimedia Devices”, page 60

⇒ “9.2 External Audio Source Connection R199 , Removing and Installing”, page 61

⇒ “9.3 USB Distributor R293 , Removing and Installing”, page 62

⇒ “9.4 USB Charging Socket 1 U37 , Removing and Installing”, page 62

9.1 Overview - Connection for External Multimedia Devices

There are several versions of the connection for external multimedia devices:

- AUX IN - USB, UI4
- MEDIA-IN, UF8
- USB charging, UI2

Designations are:

- External Audio Source Connection - R199- , UI4
- External Multimedia Device Interface - R215- , UF8
- USB Charging Socket 1 - U37- , UI2

The connection for external multimedia devices is connected to the Information Electronics Control Module 1 - J794-

Component Location of Connection for External Multimedia Devices

The connection for external multimedia devices -1- is located in the front center console storage compartment -2-.

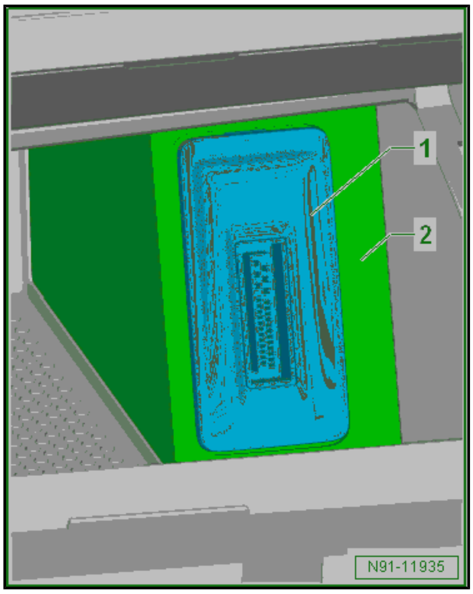

Different external audio sources can be connected to the connection for external multimedia devices:

- iPod
- MP3 player
- USB Stick

The USB Charging Socket 1 - U37- is located in the center console storage compartment. It is a component of the Storage Compartment with Cell Phone Interface - R265- and serves as a charging connection for the Cellular Telephone - R54- .

Suitable adapter cables are needed. Refer to the Owner's Manual.

Fault finding is performed via `Guided Fault Finding` using the Vehicle Diagnostic Tester .

9.2 External Audio Source Connection - R199- , Removing and Installing

⇒ "9.2.1 External Multimedia Device Interface R215 , Removing and Installing", page 61

⇒ "9.2.2 External Audio Source Connection R199 , Removing and Installing", page 61

9.2.1 External Multimedia Device Interface - R215- , Removing and Installing

The External Multimedia Device Interface - R215- is located in the front center console storage compartment.

Removing

– Turn off the ignition and all electrical equipment.

– Remove the ignition key, if equipped.

– Remove the front center console storage compartment. Refer to ⇒ Body Interior; Rep. Gr. 68 ; Center Console; Front Center Console Storage Compartment, Removing and Installing .

– Press the retaining tabs in direction of -arrow A- on the External Multimedia Device Interface - R215- -1-.

– Remove the External Multimedia Device Interface - R215- -2- from the storage compartment -1-.

Installing

Install in reverse order of removal.

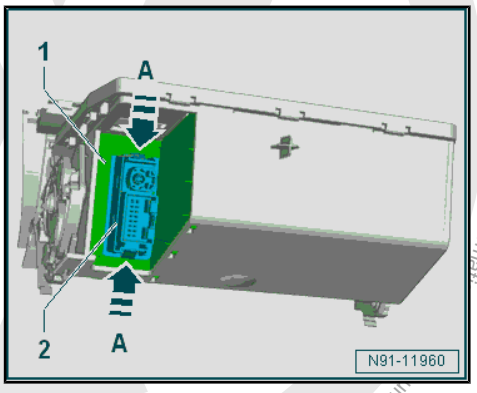

9.2.2 External Audio Source Connection - R199- , Removing and Installing

The External Audio Source Connection - R199- is located in the front center console storage compartment.

Removing

– Turn off the ignition and all electrical equipment.

– Remove the ignition key, if equipped.

– Remove the front center console storage compartment. Refer to ⇒ Body Interior; Rep. Gr. 68 ; Center Console; Front Center Console Storage Compartment, Removing and Installing .

– Press the retaining tabs in direction of -arrow A- on the External Audio Source Connection - R199- -1-.

– Remove the External Audio Source Connection - R199- -2- from the storage compartment -1-.

Installing

Install in reverse order of removal.

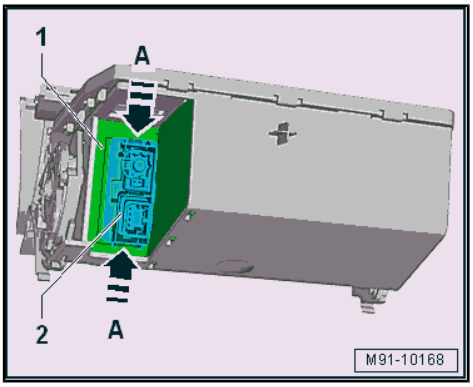

Protected by copyright. Copyright by Volkswagen AG. Volkswagen AG does not guarantee or accept any liability with respect to the correctness of information. Copyright by Volkswagen AG. Not permitted unless authorised by Volkswagen AG. Volkswagen AG does not guarantee or accept any liability with respect to the correctness of information. Copyright by Volkswagen AG.

9.3 USB Distributor - R293- , Removing and Installing

The USB Distributor - R293- is located under the right center console next to the shifter. The USB Distributor - R293- provides a connection for several USB devices, such as USB Charging Socket 1 - U37- and External Audio Source Connection - R199- , to a USB connection in the Information Electronics Control Module 1 - J794- .

Removing

– Turn off the ignition and all electrical equipment.

– Remove the ignition key, if equipped.

– Remove the center console insert. Refer to ⇒ Body Interior; Rep. Gr. 68 ; Center Console; Center Console Insert, Removing and Installing .

– Press the catch on the bracket for the USB Distributor - R293- -4- in direction of -arrow A-.

– Lift the USB Distributor - R293- -1- and remove it toward the rear.

– Release and disconnect the connectors -2 and 3-.

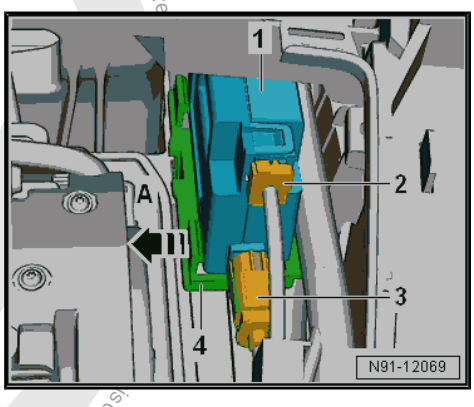

Installing

Install in reverse order of removal.

9.4 USB Charging Socket 1 - U37- , Removing and Installing

Special tools and workshop equipment required

- Trim Removal Wedge - 3409-
- Torque Wrench 1783 - 2-10Nm - VAG1783-

The USB Charging Socket 1 - U37- is located in the center console storage compartment. It is a component of the Storage Compartment with Cell Phone Interface - R265- and serves as a charging connection for the Cellular Telephone - R54- .

Removing

– Turn off the ignition and all electrical equipment.

– Remove the ignition key, if equipped.

> **Caution**
>
> *Risk of damaging the component surfaces.*
>
> - *When positioning a prying tool, put commercially available adhesive tape over the component in the visible area.*

– Fold the center console armrest up.

Protected by copyright. Copying for private or commercial purposes, in part or in whole, is not permitted unless authorised by Volkswagen AG. Volkswagen AG does not guarantee or accept any liability with respect to this document. Copyright by Volkswagen AG.

– Pry off the cover -3- using the Trim Removal Wedge - 3409- .
– Remove the bolts -1-.
– Remove the mounting plate -2- from the storage compartment in direction of -arrow A-
– Release and disconnect the connectors.

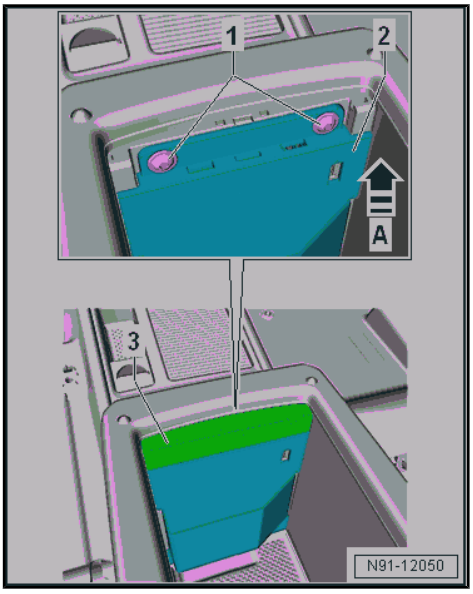

– Push the catches -2- in direction of -arrow B- off of the USB Charging Socket 1 - U37- .
– Remove the USB Charging Socket 1 - U37- -1- in direction of -arrow A-.

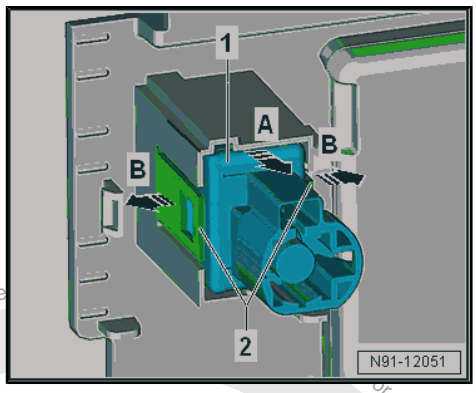

Installing

Install in reverse order of removal.

Tightening Specifications

♦ Refer to
⇒ “5.2 Component Location Overview - Telephone System”, page 40

Protected by copyright. Copying for private or commercial purposes, in part or in whole, is not permitted unless authorised by Volkswagen AG. Copyright by Volkswagen AG. or accept any liability with respect to the correctness of information in this document.

Protected by copyright. Copying for private or commercial purposes, in part or in whole, is not permitted unless authorised by Volkswagen AG. Volkswagen AG does not guarantee or accept any liability with respect to the correctness of information in this document. Copyright by Volkswagen AG.

10 Mobile Online Services

⇒ “10.1 Overview - Mobile Online Services”, page 64

⇒ “10.2 Component Location Overview - Mobile Online Services”, page 65

⇒ “10.3 Control Module for Emergency Call Module and Communication Unit J949 , Removing and Installing”, page 66

10.1 Overview - Mobile Online Services

The mobile online services are based on the Online Connectivity Unit (OCU) and the Control Module for Emergency Call Module and Communication Unit - J949- , EL2.

The Control Module for Emergency Call Module and Communication Unit - J949- is safeguarded against a crash by being installed behind the Instrument Cluster - KX2- . The Control Module for Emergency Call Module and Communication Unit - J949- contains a telephone module, emergency call module and a compass module. For determining location, the Control Module for Emergency Call Module and Communication Unit - J949- contains a GPS receiver. A separate SIM card is installed for the emergency call function and roadside assistance. Additional online services are available with a respective contract.

1 - Sound System

2 - Radio/Navigation System

3 - Multifunction Steering Wheel

4 - CAN Bus

5 - Telephone Microphone - R38-

6 - Wire from Front Interior Lamp - W1-

7 - GSM Antenna 2 - R267-

- ❑ Only with Bluetooth hands-free calling, 9ZX

8 - Wire from GSM Antenna 2 - R267-

9 - GPS Antenna - R50- / GSM Antenna - R205- wire

- ❑ Only with radio without navigation, I8D and without telephone, 9W0

10 - Roof Antenna - RX5-

- ❑ GPS Antenna - R50- / GSM Antenna - R205-

11 - Control Module for Emergency Call Module and Communication Unit - J949-

12 - GPS Antenna - R50- wire

- ❑ Only with navigation 7UF, 7UG

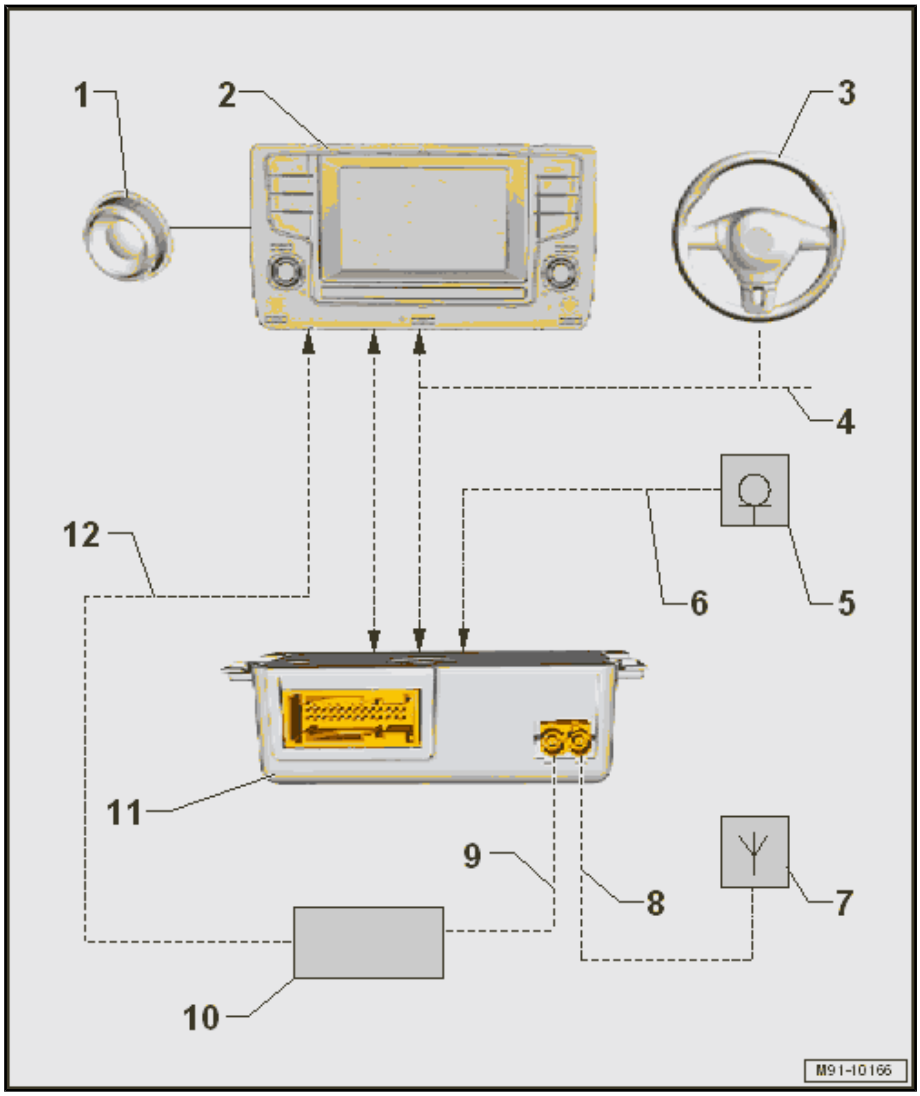

Protected by copyright. Copying for private or commercial purposes, in part or in whole, is not permitted unless authorised by Volkswagen AG. Volkswagen AG does not guarantee or accept any liability with respect to the correctness of information.

Troubleshooting

The mobile online services system is capable of self-diagnosis (OBD).

Fault finding is performed via `Guided Fault Finding` on the Vehicle Diagnostic Tester .

When there are concerns about the function, it necessary to be familiar with the Mobile Online Services functions.

For additional information. Refer to the Owner's Manual and ⇒ Wiring diagrams, Troubleshooting & Component locations.

10.2 Component Location Overview - Mobile Online Services

Note

The component location is shown for the sedan. The component location for the wagon is identical.

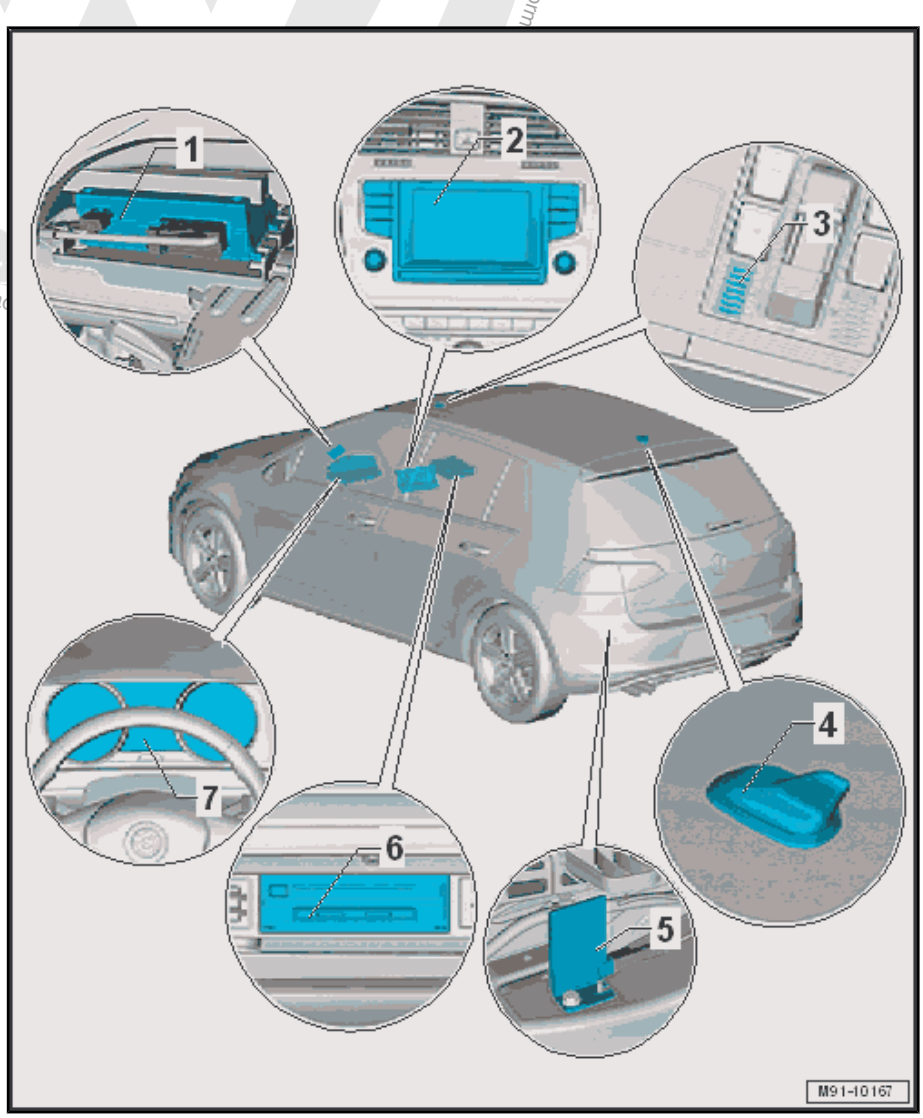

1 - Control Module for Emergency Call Module and Communication Unit - J949-

- ❑ Behind the Instrument Cluster - KX2-
- ❑ Removing and installing. Refer to ⇒ "10.3 Control Module for Emergency Call Module and Communication Unit J949 , Removing and Installing", page 66 .
- ❑ Connector assignment. Refer to ⇒ Wiring diagrams, Troubleshooting & Component locations.

2 - Front Information Display Control Head - J685-

- ❑ In the front center console
- ❑ Removing and installing. Refer to ⇒ "1.3 Infotainment System Display, Removing and Installing", page 12 .

3 - Telephone Microphone - R38-

- ❑ in the Front Interior Lamp - W1-
- ❑ Removing and installing. Refer to ⇒ "5.4 Telephone Microphone R38 , Removing and Installing", page 43 .

4 - Roof Antenna - RX5-

- ❑ Removing and installing. Refer to ⇒ "3.5 Roof Antenna, Removing and Installing", page 35 .

5 - GSM Antenna 2 - R267-

- ❑ Behind the rear bumper trim panel on the left side

- ❑ Remove and install like the Vehicle GPS Antenna 2 - R260- . Refer to
  ⇒ “3.6.2 Vehicle GPS Antenna 2 R260 , Removing and Installing, GSM”, page 37 .

6 - Information Electronics Control Module 1 - J794-

- ❑ Installed in the glove compartment
- ❑ Connector assignment. Refer to ⇒ Wiring diagrams, Troubleshooting & Component locations.
- ❑ Removing and installing. Refer to
  ⇒ “1.4 Information Electronics Control Module 1 J794 , Removing and Installing”, page 13 .

7 - Instrument Cluster - KX2-

- ❑ Removing and installing. Refer to ⇒ Electrical Equipment; Rep. Gr. 90 ; Instrument Cluster; Instrument Cluster - KX2- ; Removing and Installing .

10.3 Control Module for Emergency Call Module and Communication Unit - J949- , Removing and Installing

If the control module is replaced, select the `Replacement` function for the appropriate control module in `Guided Fault Finding` using the Vehicle Diagnostic Tester .

Removing

– Turn off the ignition and all electrical equipment.

– Remove the ignition key, if equipped.

– Remove the Instrument Cluster - KX2- . Refer to ⇒ Electrical Equipment; Rep. Gr. 90 ; Instrument Cluster; Instrument Cluster - KX2- ; Removing and Installing .

– Disconnect the connectors -1- and -2-.

– Press the catches upward opposite of the -A arrows- and slide the Control Module for Emergency Call Module and Communication Unit - J949- -3- out toward the rear -arrow B-.

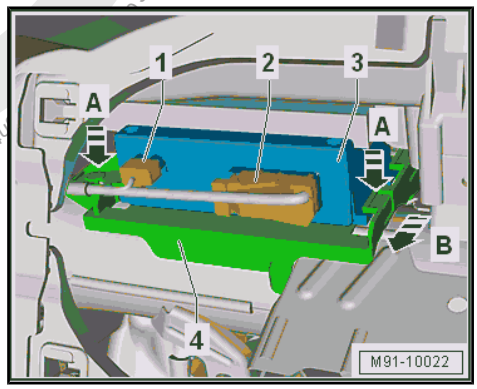

Installing

Install in reverse order of removal.

Protected by copyright. Copying for private or commercial purposes, in part or in whole, is not permitted unless authorised by Volkswagen AG. Volkswagen AG does not guarantee or accept any liability with respect to the correctness of information in this

11 Special Tools

Special tools and workshop equipment required

- Radio Removal Tool - T10057-

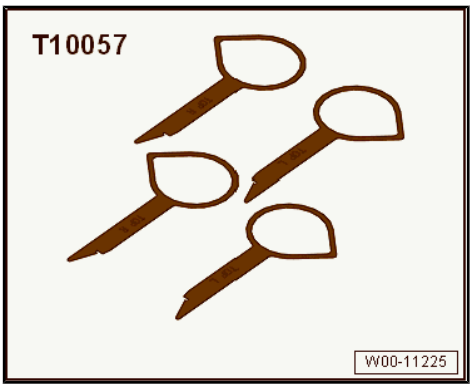

- Lever - Fuel Line - T10468-

- Torque Wrench 1783 - 2-10Nm - VAG1783-

- Fiber-Optic Repair Set - Connector Protective Caps - VAS6223/9-

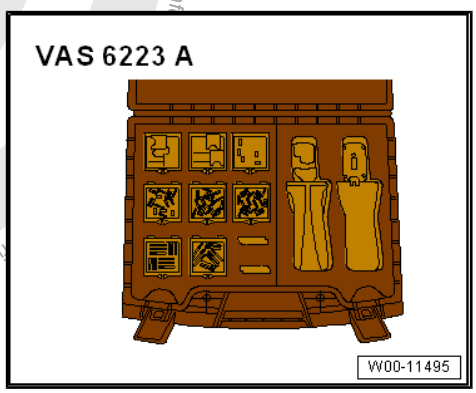

Protected by copyright. Copying for private or commercial purposes, in part or in whole, is not permitted unless authorised by Volkswagen AG. Volkswagen AG does not guarantee or accept any liability with respect to the correctness of information in this document. Copyright by Volkswagen AG.

- Torque Screwdriver - VAS6494-

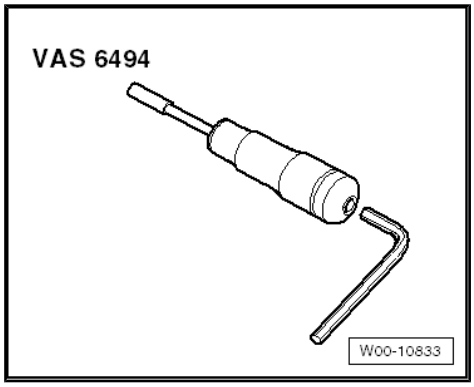

- Door Trim Pliers - 3392-

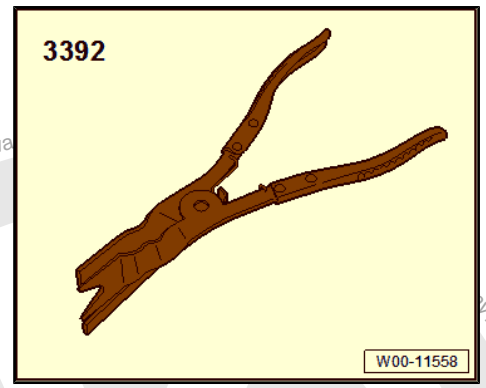

- Trim Removal Wedge - 3409-

Protected by copyright. Copying for private or commercial purposes, in part or in whole, is not permitted unless authorised by Volkswa
Copyright by Volkswagen AG.
y liability with respect to the correctness of information in this document.

12 Revision History

DRUCK NUMBER: K0059241621

Factory Edition	Edit Edition	Job Type	Feedback	Notes	Quality Checked By
02.2015	09/03/2015	Local Feedback	1121352, 1121353, 1121354, 1121356	Removed all references to R259, R260, and Anti-Theft Protection/GPS Control Module. Not applicable to North America	Tom Perry
02.2015	08/24/2015	Editing Review			Tom Perry
02.2015	3/17/2015	Factory Update			Jim H
	8/4/2014	Feedback	1027233		Jim H
	04/24/2014	Factory New	N/A		Tom Perry

Protected by copyright. Copying for private or commercial purposes, in part or in whole, is not permitted unless authorised by Volkswagen AG. Volkswagen AG does not guarantee or accept any liability with respect to the correctness of information in this document. Copyright by Volkswagen AG.

Cautions & Warnings

Please read these WARNINGS and CAUTIONS before proceeding with maintenance and repair work. You must answer that you have read and you understand these WARNINGS and CAUTIONS before you will be allowed to view this information.

- If you lack the skills, tools and equipment, or a suitable workshop for any procedure described in this manual, we suggest you leave such repairs to an authorized Volkswagen retailer or other qualified shop. We especially urge you to consult an authorized Volkswagen retailer before beginning repairs on any vehicle that may still be covered wholly or in part by any of the extensive warranties issued by Volkswagen.

- Disconnect the battery negative terminal (ground strap) whenever you work on the fuel system or the electrical system. Do not smoke or work near heaters or other fire hazards. Keep an approved fire extinguisher handy.

- Volkswagen is constantly improving its vehicles and sometimes these changes, both in parts and specifications, are made applicable to earlier models. Therefore, part numbers listed in this manual are for reference only. Always check with your authorized Volkswagen retailer parts department for the latest information.

- Any time the battery has been disconnected on an automatic transmission vehicle, it will be necessary to reestablish Transmission Control Module (TCM) basic settings using the VAG 1551 Scan Tool (ST).

- Never work under a lifted vehicle unless it is solidly supported on stands designed for the purpose. Do not support a vehicle on cinder blocks, hollow tiles or other props that may crumble under continuous load. Never work under a vehicle that is supported solely by a jack. Never work under the vehicle while the engine is running.

- For vehicles equipped with an anti-theft radio, be sure of the correct radio activation code before disconnecting the battery or removing the radio. If the wrong code is entered when the power is restored, the radio may lock up and become inoperable, even if the correct code is used in a later attempt.

- If you are going to work under a vehicle on the ground, make sure that the ground is level. Block the wheels to keep the vehicle from rolling. Disconnect the battery negative terminal (ground strap) to prevent others from starting the vehicle while you are under it.

- Do not attempt to work on your vehicle if you do not feel well. You increase the danger of injury to yourself and others if you are tired, upset or have taken medicine or any other substances that may impair you or keep you from being fully alert.

- Never run the engine unless the work area is well ventilated. Carbon monoxide (CO) kills.

- Always observe good workshop practices. Wear goggles when you operate machine tools or work with acid. Wear goggles, gloves and other protective clothing whenever the job requires working with harmful substances.

- Tie long hair behind your head. Do not wear a necktie, a scarf, loose clothing, or a necklace when you work near machine tools or running engines. If your hair, clothing, or jewelry were to get caught in the machinery, severe injury could result.

- Do not re-use any fasteners that are worn or deformed in normal use. Some fasteners are designed to be used only once and are unreliable and may fail if used a second time. This includes, but is not limited to, nuts, bolts, washers, circlips and cotter pins. Always follow the recommendations in this manual - replace these fasteners with new parts where indicated, and any other time it is deemed necessary by inspection.

next

© 2002 Volkswagen of America, Inc.
All rights reserved. Information contained in this document is based on the latest information available at the time of printing and is subject to the copyright and other intellectual property rights of Volkswagen of America, Inc., its affiliated companies and its licensors. All rights are reserved to make changes at any time without notice. No part of this document may be reproduced, stored in a retrieval system, or transmitted in any form or by any means, electronic, mechanical, photocopying, recording, or otherwise, nor may these materials be modified or reposted to other sites, without the prior expressed written permission of the publisher.
Version 1.0

Cautions & Warnings

- Illuminate the work area adequately but safely. Use a portable safety light for working inside or under the vehicle. Make sure the bulb is enclosed by a wire cage. The hot filament of an accidentally broken bulb can ignite spilled fuel or oil.

- Friction materials such as brake pads and clutch discs may contain asbestos fibers. Do not create dust by grinding, sanding, or by cleaning with compressed air. Avoid breathing asbestos fibers and asbestos dust. Breathing asbestos can cause serious diseases such as asbestosis or cancer, and may result in death.

- Finger rings should be removed so that they cannot cause electrical shorts, get caught in running machinery, or be crushed by heavy parts.

- Before starting a job, make certain that you have all the necessary tools and parts on hand. Read all the instructions thoroughly; do not attempt shortcuts. Use tools that are appropriate to the work and use only replacement parts meeting Volkswagen specifications. Makeshift tools, parts and procedures will not make good repairs.

- Catch draining fuel, oil or brake fluid in suitable containers. Do not use empty food or beverage containers that might mislead someone into drinking from them. Store flammable fluids away from fire hazards. Wipe up spills at once, but do not store the oily rags, which can ignite and burn spontaneously.

- Use pneumatic and electric tools only to loosen threaded parts and fasteners. Never use these tools to tighten fasteners, especially on light alloy parts. Always use a torque wrench to tighten fasteners to the tightening torque listed.

- Keep sparks, lighted matches, and open flame away from the top of the battery. If escaping hydrogen gas is ignited, it will ignite gas trapped in the cells and cause the battery to explode.

- Be mindful of the environment and ecology. Before you drain the crankcase, find out the proper way to dispose of the oil. Do not pour oil onto the ground, down a drain, or into a stream, pond, or lake. Consult local ordinances that govern the disposal of wastes.

- The air-conditioning (A/C) system is filled with a chemical refrigerant that is hazardous. The A/C system should be serviced only by trained automotive service technicians using approved refrigerant recovery/recycling equipment, trained in related safety precautions, and familiar with regulations governing the discharging and disposal of automotive chemical refrigerants.

- Before doing any electrical welding on vehicles equipped with anti-lock brakes (ABS), disconnect the battery negative terminal (ground strap) and the ABS control module connector.

- Do not expose any part of the A/C system to high temperatures such as open flame. Excessive heat will increase system pressure and may cause the system to burst.

- When boost-charging the battery, first remove the fuses for the Engine Control Module (ECM), the Transmission Control Module (TCM), the ABS control module, and the trip computer. In cases where one or more of these components is not separately fused, disconnect the control module connector(s).

- Some of the vehicles covered by this manual are equipped with a supplemental restraint system (SRS), that automatically deploys an airbag in the event of a frontal impact. The airbag is operated by an explosive device. Handled improperly or without adequate safeguards, it can be accidentally activated and cause serious personal injury. To guard against personal injury or airbag system failure, only trained Volkswagen Service technicians should test, disassemble or service the airbag system.

back next

© 2002 Volkswagen of America, Inc.
All rights reserved. Information contained in this document is based on the latest information available at the time of printing and is subject to the copyright and other intellectual property rights of Volkswagen of America, Inc., its affiliated companies and its licensors. All rights are reserved to make changes at any time without notice. No part of this document may be reproduced, stored in a retrieval system, or transmitted in any form or by any means, electronic, mechanical, photocopying, recording, or otherwise, nor may these materials be modified or reposted to other sites, without the prior expressed written permission of the publisher.
Version 1.0

Cautions & Warnings

- Do not quick-charge the battery (for boost starting) for longer than one minute, and do not exceed 16.5 volts at the battery with the boosting cables attached. Wait at least one minute before boosting the battery a second time.

- Never use a test light to conduct electrical tests of the airbag system. The system must only be tested by trained Volkswagen Service technicians using the VAG 1551 Scan Tool (ST) or an approved equivalent. The airbag unit must never be electrically tested while it is not installed in the vehicle.

- Some aerosol tire inflators are highly flammable. Be extremely cautious when repairing a tire that may have been inflated using an aerosol tire inflator. Keep sparks, open flame or other sources of ignition away from the tire repair area. Inflate and deflate the tire at least four times before breaking the bead from the rim. Completely remove the tire from the rim before attempting any repair.

- When driving or riding in an airbag-equipped vehicle, never hold test equipment in your hands or lap while the vehicle is in motion. Objects between you and the airbag can increase the risk of injury in an accident.

I have read and I understand these Cautions and Warnings.

back OK

Protected by copyright. Copying for private or commercial purposes, in part or in whole, is not permitted unless authorised by Volkswagen AG. Volkswagen AG does not guarantee or accept any liability with respect to the correctness of information in this document. Copyright by Volkswagen AG.

© 2002 Volkswagen of America, Inc.
All rights reserved. Information contained in this document is based on the latest information available at the time of printing and is subject to the copyright and other intellectual property rights of Volkswagen of America, Inc., its affiliated companies and its licensors. All rights are reserved to make changes at any time without notice. No part of this document may be reproduced, stored in a retrieval system, or transmitted in any form or by any means, electronic, mechanical, photocopying, recording, or otherwise, nor may these materials be modified or reposted to other sites, without the prior expressed written permission of the publisher.
Version 1.0