2009 Mazda RX-8 Service Highlights

FOREWORD

This manual contains on-vehicle service and/or diagnosis procedures for the Mazda RX-8.

For proper repair and maintenance, a thorough familiarization with this manual is important, and it should always be kept in a handy place for quick and easy reference.

All the contents of this manual, including drawings and specifications, are the latest available at the time of printing.
As modifications affecting repair or maintenance occur, relevant information supplementary to this volume will be made available at Mazda dealers. This manual should be kept up-to-date.

Mazda Motor Corporation reserves the right to alter the specifications and contents of this manual without obligation or advance notice.

All rights reserved. No part of this book may be reproduced or used in any form or by any means, electronic or mechanical—including photocopying and recording and the use of any kind of information storage and retrieval system—without permission in writing.

Mazda Motor Corporation
HIROSHIMA, JAPAN

APPLICATION:
This manual is applicable to vehicles beginning with the Vehicle Identification Numbers (VIN), and related materials shown on the following page.

CONTENTS

Title	Section
GENERAL INFORMATION	00
ENGINE	01
SUSPENSION	02
DRIVELINE/AXLE	03
BRAKES	04
TRANSMISSION/TRANSAXLE	05
STEERING	06
HEATER, VENTILATION & AIR CONDITIONING (HVAC)	07
RESTRAINTS	08
BODY & ACCESSORIES	09

There are explanation given only for the sections marked with shadow (▬).

© 2008 Mazda Motor Corporation
PRINTED IN U.S.A., MARCH 2008
Form No. 3452–1U–08C
Part No. 9999–95–102F–09

VEHICLE IDENTIFICATION NUMBERS (VIN)

JM1 FE172⁎9# 400001—
JM1 FE174⁎9# 400001—
JM1 FE17M⁎9# 400001—
JM1 FE17P⁎9# 400001—

RELATED MATERIALS

Material Name	MNAO Part No.	Mazda Material No.
2004 Mazda RX-8 Service Highlights	9999-95-102F-04	3378-1U-03C
2005 Mazda3, Mazda MX-5 Miata, Mazda MX-5, MAZDASPEED MX-5, Mazda MPV, Mazda RX-8 Service Highlights	9999-95-MODL-05	3400-1U-04H
2006 Mazda RX-8 Service Highlights	9999-95-102F-06	3409-1U-05J
2007 Mazda3, MAZDASPEED3, Mazda5, Mazda MX-5, Mazda6, MAZDASPEED6, Mazda RX-8 Service Highlights	9999-95-MODL-07	3422-1U-06G
2008 Mazda3, MAZDASPEED3, Mazda5, Mazda MX-5, Mazda6, Mazda CX-7, Mazda RX-8, Mazda CX-9 Service Highlights	9999-95-010F-08	3431-1U-07I
1995, 1996, 1997, 1998, 1999, 2000 OBD-II Service Highlights	9999-95-OBD2-00	3344-1U-99K
2009 Mazda RX-8 Workshop Manual	9999-95-064B-09	1927-1U-08C
Engine Worlshop Manual 13B-MSP	9999-95-E13B-MSP	1773-1U-03C
Manual Transmission Workshop Manual P66M-D	9999-95-423H-06	1848-1U-05F
Automatic Transmission Workshop Manual SJ6A-EL	9999-95-SJ6A-EL	1876-1U-06J
2004 Mazda RX-8 Bodyshop Manual	9999-95-120F-04	3379-1U-03D
2009 Mazda RX-8 Wiring Diagram	9999-95-040G-09	5762-1U-08C

GENERAL INFORMATION

00
SECTION

GENERAL INFORMATION 00-00

00-00 GENERAL INFORMATION

AIM OF DEVELOPMENT 00-00–1
Outline **00-00–1**
VEHICLE IDENTIFICATION NUMBER (VIN) CODE. 00-00–5
VEHICLE IDENTIFICATION NUMBER (VIN) 00-00–5

AIM OF DEVELOPMENT

id000000100100

Outline
External view

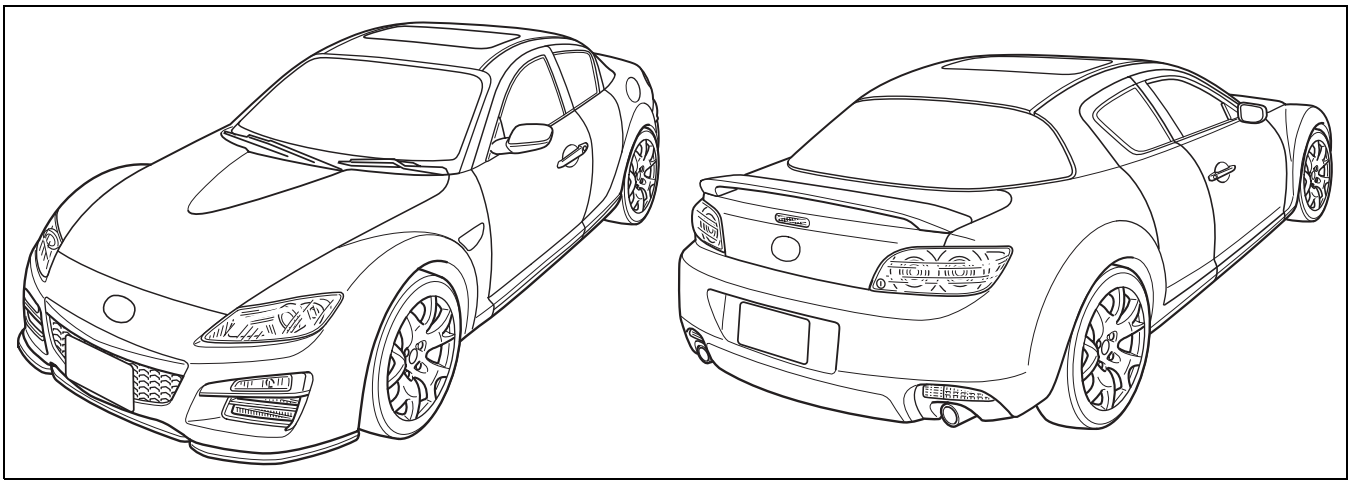

ar8uun00000171

Suspension

- Trapezoidal front suspension tower bar adopted to improve the rigidity and handling stability. (MT)
- 19-inch wheel and tire adopted for hard suspension.

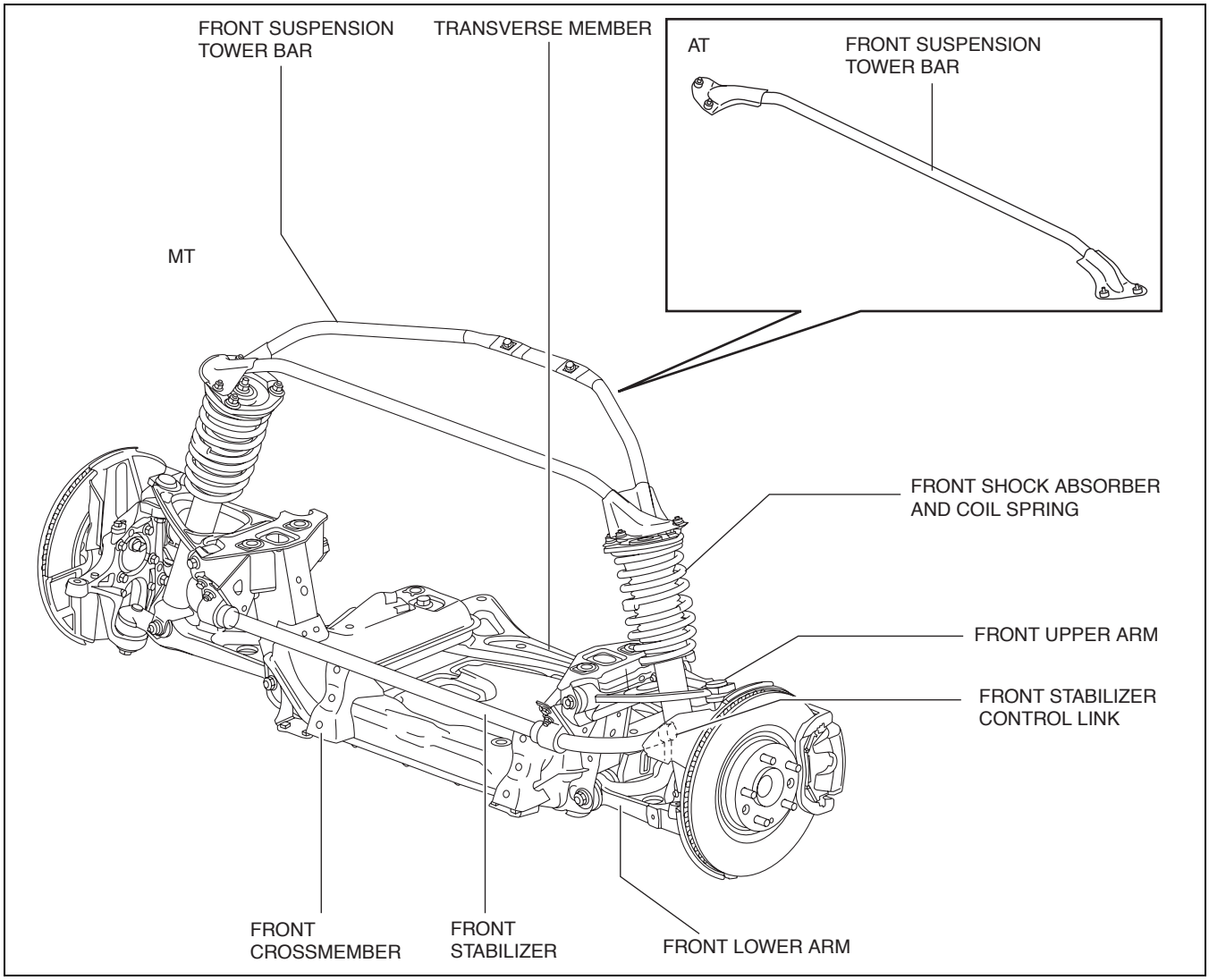

ar8uun00000297

Transmission

- Manual transmission
  - — Six-speed P66M-D manual transmission has been adopted.
  - — A linked, triple-cone synchronizer mechanism has been adopted for 1st, 2nd, 3rd and 4th gears.
  - — A guide plate type reverse lockout mechanism has been adopted.

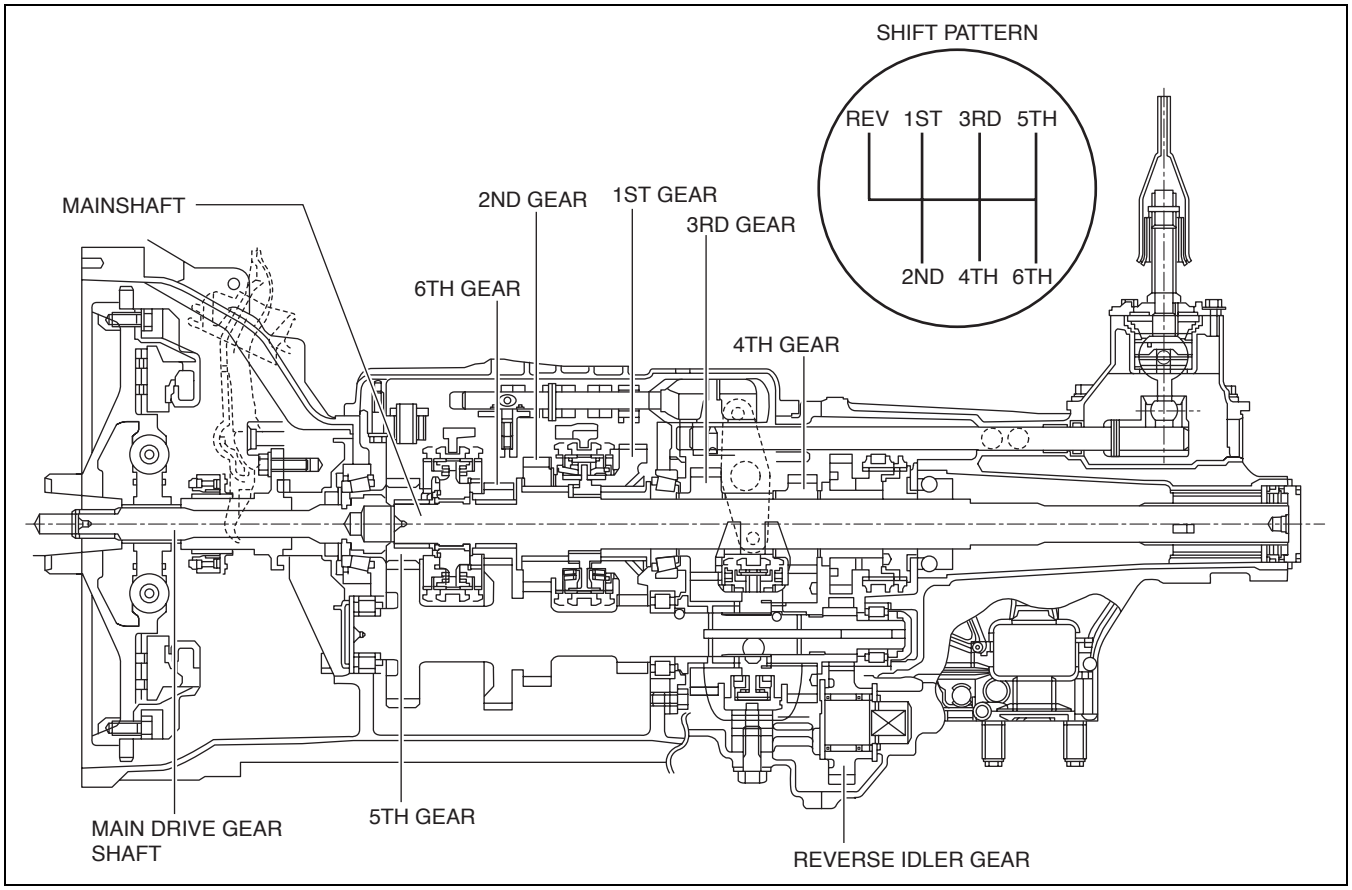

ar8uun00000298

- Automatic transmission
  - — SJ6A-EL type 6-speed AT has been adopted.
  - — The Sport AT has been adopted.
  - — Newly developed direct active matic control has been adopted.

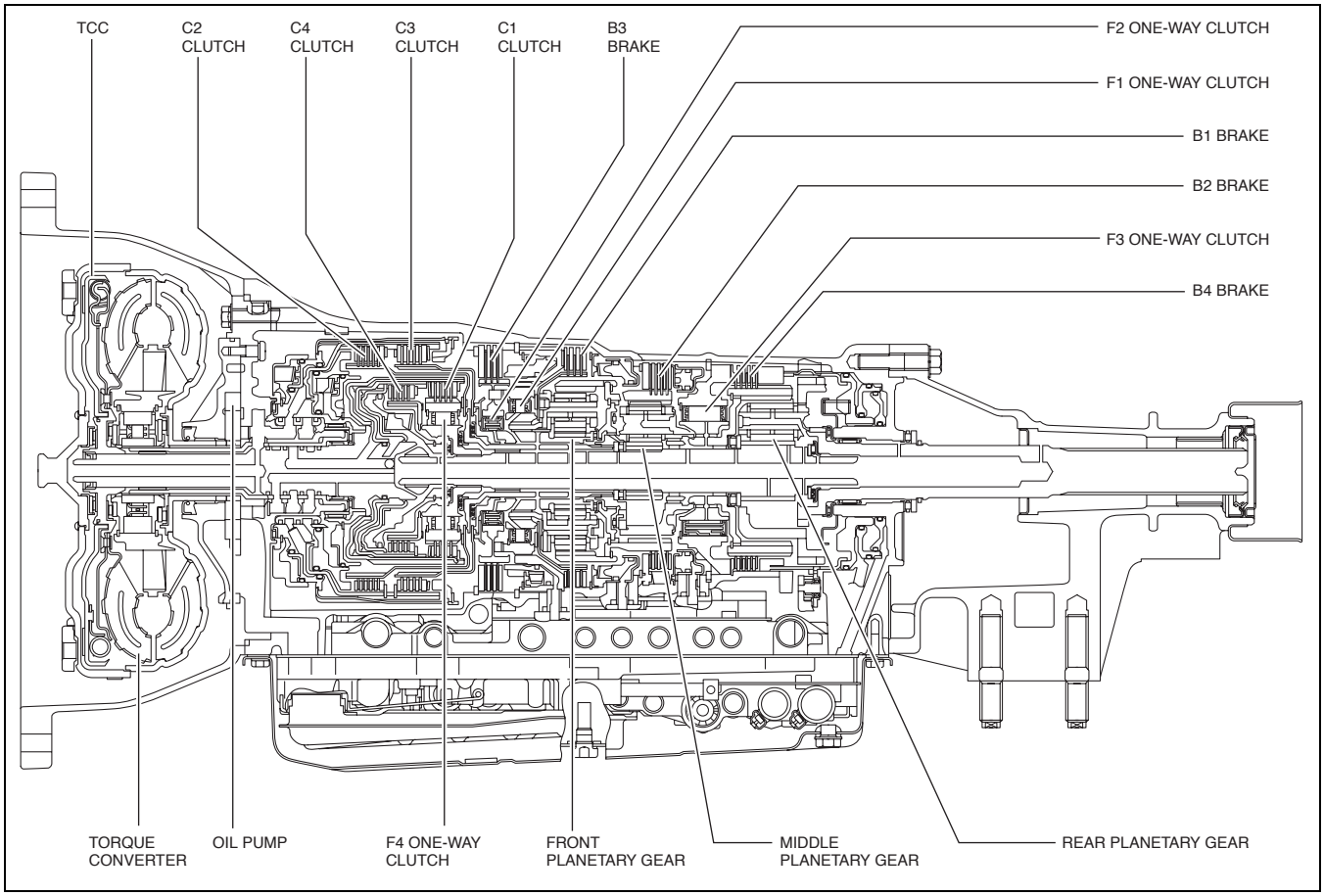

ar8uun00000224

VEHICLE IDENTIFICATION NUMBER (VIN) CODE

id000000100200

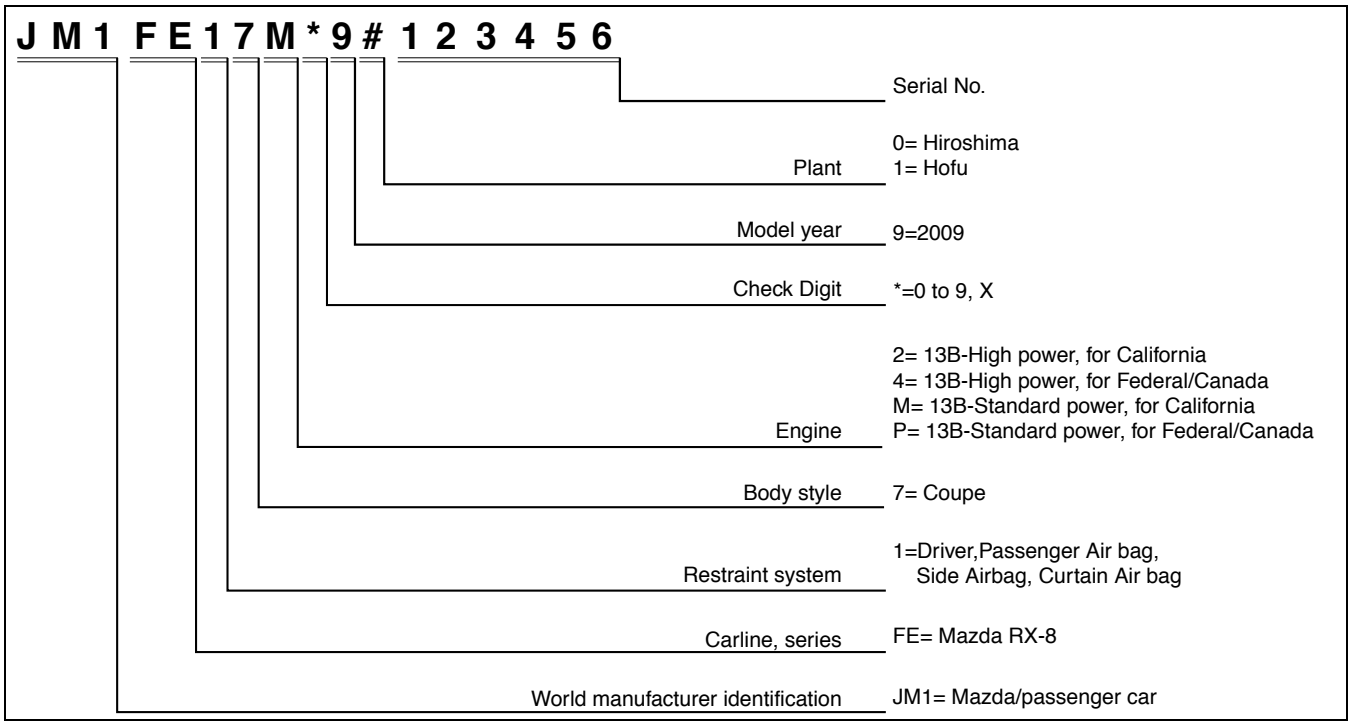

ar8uuw00002204

VEHICLE IDENTIFICATION NUMBER (VIN)

id000000100300

JM1 FE172*9# 400001—
JM1 FE174*9# 400001—
JM1 FE17M*9# 400001—
JM1 FE17P*9# 400001—

ENGINE

01
SECTION

OUTLINE[13B-MSP] 01-00
ON-BOARD DIAGNOSTIC [13B-MSP] 01-02
MECHANICAL[13B-MSP] 01-10
LUBRICATION[13B-MSP] 01-11
COOLING SYSTEM [13B-MSP] 01-12
INTAKE-AIR SYSTEM [13B-MSP] 01-13
FUEL SYSTEM[13B-MSP] 01-14
EMISSION SYSTEM [13B-MSP] 01-16
CHARGING SYSTEM [13B-MSP] 01-17
CRUISE CONTROL SYSTEM[13B-MSP] 01-20
CONTROL SYSTEM [13B-MSP] 01-40

01-00 OUTLINE [13B-MSP]

ENGINE ABBREVIATIONS [13B-MSP] **01-00–1**
ENGINE FEATURES [13B-MSP] **01-00–2**
On-board Diagnostic **01-00–2**
Mechanical **01-00–2**
Lubrication **01-00–2**
Cooling System **01-00–2**
Charging System **01-00–2**
Cruise Control System **01-00–2**
Control System. **01-00–2**
ENGINE SPECIFICATIONS [13B-MSP] **01-00–3**

ENGINE ABBREVIATIONS [13B-MSP]

id010050100100

ABDC	After Bottom Dead Center
APV	Auxiliary Port Valve
AT	Automatic Transmission
ATDC	After Top Dead Center
BBDC	Before Bottom Dead Center
BTDC	Before Top Dead Center
CAN	Controller Area Network
CCM	Comprehensive Component Monitor
DC	Drive Cycle
EX	Exhaust
FP	Front Primary
FS	Front Secondary
F/P	Fuel Pump
HI	High
IC	Integrated Circuit
IG	Ignition
IN	Intake
KAM	Keep Alive Memory
KOEO	Key On Engine Off
KOER	Key On Engine Running
LF	Left Front
LH	Left Hand
LO	Low
LR	Left Rear
L/F	Leading Front

L/R	Leading Rear
MT	Manual Transmission
OCV	Oil Control Valve
RH	Right Hand
RP	Rear Primary
RR	Right Rear
RS	Rear Secondary
SSV	Secondary Shutter Valve
SW	Switch
T/F	Trailing Front
T/R	Trailing Rear
VDI	Variable Dynamic Effect Intake
VFAD	Variable Fresh Air Duct

ENGINE FEATURES [13B-MSP]

id010050100200

On-board Diagnostic

To meet OBD-II regulations	• Diagnostic test modes changed
Improved serviceability	• DTCs changed • KOEO/KOER self-test function changed • PID/DATA monitor function changed • Simulation test function changed

Mechanical

Reduced engine noise and vibration	• Stationary gear changed (standard power)
Improved engine torque	• Auxiliary port adopted (standard power)

Lubrication

Improved lubricity	• An electric type metering oil pump system adopted • Center oil nozzles adopted which discharge oil to the center area of the rotor housings • Oil pump changed • Oil pan upper block adopted
Improved serviceability	• Oil filter position changed

Cooling System

Improved cooling performance	• Radiator changed • Water pump changed • Cooling fan component changed

Charging System

Improved generator output	• Generator changed

Cruise Control System

Improved driveability	• Cruise control switch changed

Control System

Improved engine torque and output	• S-DAIS control changed • APV position sensor No.1, No.2 adopted
Improved engine reliability	• KS No.1, No.2 adopted • Electrical fan control changed • Fuel injection control changed
Improved lubricity	• Metering oil pump control changed — Metering oil pump driver adopted • Oil pressure control adopted — Oil pressure sensor adopted

ENGINE SPECIFICATIONS [13B-MSP]

id010050113300

Item					Specification			
					2009MY		2008MY	
					13B-MSP (Standard power)	13B-MSP (High power)	13B-MSP (Standard power)	13B-MSP (High power)
MECHANICAL								
Engine type					Rotary		←	
Rotor arrangement and number					In-line 2-rotor, longitudinal		←	
Combustion chamber type					Bathtub		←	
Displacement				(ml {cc, cu in})	654 {654, 40.0}×2		←	
Compression ratio					10.0		←	
Compression pressure				(kPa {kgf/cm^2, psi} [rpm])	830 {8.5, 120}[250]		←	
Port timing	IN	Open	Primary port	ATDC	3°		←	
			Secondary port		12°		←	
			Auxiliary port		38°		–	38°
		Close	Primary port	ABDC	65°		60°	65°
			Secondary port		36°		45°	36°
			Auxiliary port		80°		–	80°
	EX	Open		BBDC	50°		40°	50°
		Close		BTDC	3°		←	
LUBRICATION SYSTEM								
Type					Force-fed type		←	
Oil pressure (reference value) [oil temperature: 100°C {212°F}]				(kPa {kgf/cm^2, psi} [rpm])	500 {5.10, 72.5} [3,000]		350 {3.57, 50.8} [3,000]	
Oil pump	Type				Trochoid gear type		←	
	Relief valve opening pressure (reference value)			(kPa {kgf/cm^2, psi})	1,080 {11.01, 156.6}		441—490 {4.5—5.0, 64.0—71.0}	
Oil filter	Type				Full-flow, paper element		←	
	Bypass pressure			(kPa {kgf/cm^2, psi})	140—180 {1.43—1.83, 20.3—26.1}		78—118 {0.8—1.2, 11.4—17.1}	
Oil capacity (approx. quantity)		Oil replacement		(L {US qt, Imp qt})	4.2 {4.4, 3.7}		3.3 {3.5, 2.9}	
		Oil and oil filter replacement		(L {US qt, Imp qt})	4.4 {4.6, 3.9}		3.5 {3.7, 3.1}	
		Engine overhaul		(L {US qt, Imp qt})	5.6 {5.9, 4.9}		4.7 {5.0, 4.1}	
		Total (dry engine)		(L {US qt, Imp qt})	6.3 {6.7, 5.5}	7.0 {7.4, 6.2}	5.7 {6.0, 5.0}	6.4 {6.8, 5.6}
COOLING SYSTEM								
Type					Water-cooled, forced circulation		←	
Coolant capacity (approx. quantity)				(L {US qt, Imp qt})	AT: 9.8 {10, 8.6} MT: 10.0 {10.6, 8.80}		9.8 {10, 8.6}	
Water pump	Type				Centrifugal, V-ribbed belt-driven		←	
Thermostat	Type				Wax		←	
	Opening temperature			(°C {F°})	80—84 {176—183}		←	
	Full-open temperature			(°C {F°})	95 {203}		←	
	Full-open lift			(mm {in})	8.5 {0.33} or more		←	
Radiator	Type				Corrugated fin		←	
Cooling system cap	Cap valve opening pressure			(kPa {kgf/cm^2, psi})	73.6—103 {0.75—1.05, 10.7—14.9}		←	
Cooling fan	Type				Electric		←	
	Number of blades				Cooling fan No.1: 5 Cooling fan No.2: 7		←	
	Outer diameter			(mm {in})	300 {11.8}		←	

Item			Specification			
			2009MY		2008MY	
			13B-MSP (Standard power)	13B-MSP (High power)	13B-MSP (Standard power)	13B-MSP (High power)
FUEL SYSTEM						
Injector	Type		Multiple hole design		←	
	Type of fuel delivery		Top-feed		←	
	Type of drive		Electronic		←	
Pressure regulator control pressure		(kPa {kgf/cm^2, psi})	Approx. 390 {3.98, 56.6}		←	
Fuel pump type			Electric		←	
Fuel tank capacity (approx. quantity)		(L {US gal, Imp gal})	64.0 {16.9, 14.1}		60 {15.9, 13.2}	
Fuel type			Unleaded premium (unleaded high-octane) gasoline		←	
EMISSION SYSTEM						
AIR system			Air pump, air control valve		←	
Catalyst type			Three-way catalyst (monolithic)		←	
EVAP control system			Canister design		←	
PCV system			Closed design		←	
CHARGING SYSTEM						
Battery	Voltage	(V)	12		←	
	Type and capacity (5 hour rate)	(A·h)	80D26L (55)		75D23L (52)	
Generator	Output	(V–A)	12—110		12—100	
	Regulated voltage		Controlled by PCM		←	
	Self diagnosis function					
IGNITION SYSTEM						
Ignition system	Type		Distributorless Ignition (DLI)		←	
	Spark advance		Electronic		←	
	Firing order		When idling: T/F-L/F-T/R-L/R Except for idling: L/F-T/F-L/R-T/R (Independent ignition control)		←	
Spark plug	Type	Leading side	N3H5 18 110A (RE7C-L)*1, N3Y8 18 110A (RE7C-L)*1, N3Y9 18 110A (RE6C-L)*2		←	
		Trailing side	N3H1 18 110D (RE9B-T)*1, N3Y1 18 110A (RE9B-T)*1		←	
STARTING SYSTEM						
Starter	Type		Coaxial reduction		←	
	Output	(kW)	2.0		←	
CONTROL SYSTEM						
Neutral switch (MT)			ON/OFF		←	
CPP switch (MT)			ON/OFF		←	
SSV switch			ON/OFF		←	
APV position sensor			Magneto resistance element		–	Hall element
ECT sensor			Thermistor		←	

Item	Specification			
	2009MY		2008MY	
	13B-MSP (Standard power)	13B-MSP (High power)	13B-MSP (Standard power)	13B-MSP (High power)
IAT sensor	Thermistor		←	
TP sensor	Hall element		←	
APP sensor	Hall element		←	
MAF sensor (Inside MAF)	Hot-wire		←	
A/F sensor	Zirconia element (all range air/fuel ratio sensor)		←	
HO2S	Zirconia element (Stoichiometric air/fuel ratio sensor)		←	
BARO sensor (built into PCM)	Piezoelectric element		←	
KS	Piezoelectric element		←	
Eccentric shaft position sensor	Magnetic pickup		←	
Oil pressure sensor	Piezoelectric element		–	
PCM temperature sensor (built into PCM)	Thermistor		–	
Metering oil pump switch	–		ON/OFF	
Brake switch	ON/OFF		←	
Throttle valve actuator	DC motor		←	
APV motor	DC motor		–	DC motor
Fuel injector (primary 1)	Multiple hole type (12 holes)		←	
Fuel injector (secondary)	Multiple hole type (4 holes)		←	
Fuel injector (primary 2)	–		–	Multiple hole type (4 holes)
Stepping motor (in metering oil pump)	–		Stepping motor	

*1 : Standard equipment
*2 : Hot type plug: Available only for customers who often drive their car at very low speed which causes the plugs to foul easily.

Engine oil specification

Item	U.S.A. and CANADA	Except U.S.A. and CANADA
Engine oil grade	(ILSAC)	API SL, SM or ILSAC
Engine oil viscosity	5W-20	

01-02 ON-BOARD DIAGNOSTIC [13B-MSP]

ON-BOARD DIAGNOSTIC OUTLINE [13B-MSP] 01-02–1
Features 01-02–1
ON-BOARD DIAGNOSTIC WIRING DIAGRAM [13B-MSP] 01-02–2
ON-BOARD DIAGNOSTIC SYSTEM TEST MODE [13B-MSP] 01-02–4
Sending Diagnostic Data 01-02–4
Sending Freeze Frame Data 01-02–5
Sending Emission-related Malfunction Code 01-02–6
Sending Intermittent Monitoring System Test Results 01-02–10
DTC DETECTION LOGIC AND CONDITIONS [13B-MSP] 01-02–10
KOEO/KOER SELF-TEST [13B-MSP] 01-02–15
PID/DATA MONITOR AND RECORD [13B-MSP] 01-02–18
SIMULATION TEST [13B-MSP] 01-02–20

ON-BOARD DIAGNOSTIC OUTLINE [13B-MSP]

id0102g1100100

Features

To meet OBD-II regulations	• Diagnostic test modes changed
Improved serviceability	• DTCs changed • KOEO/KOER self-test function changed • PID/DATA monitor function changed • Simulation test function changed

ON-BOARD DIAGNOSTIC WIRING DIAGRAM [13B-MSP]

id0102g1122200

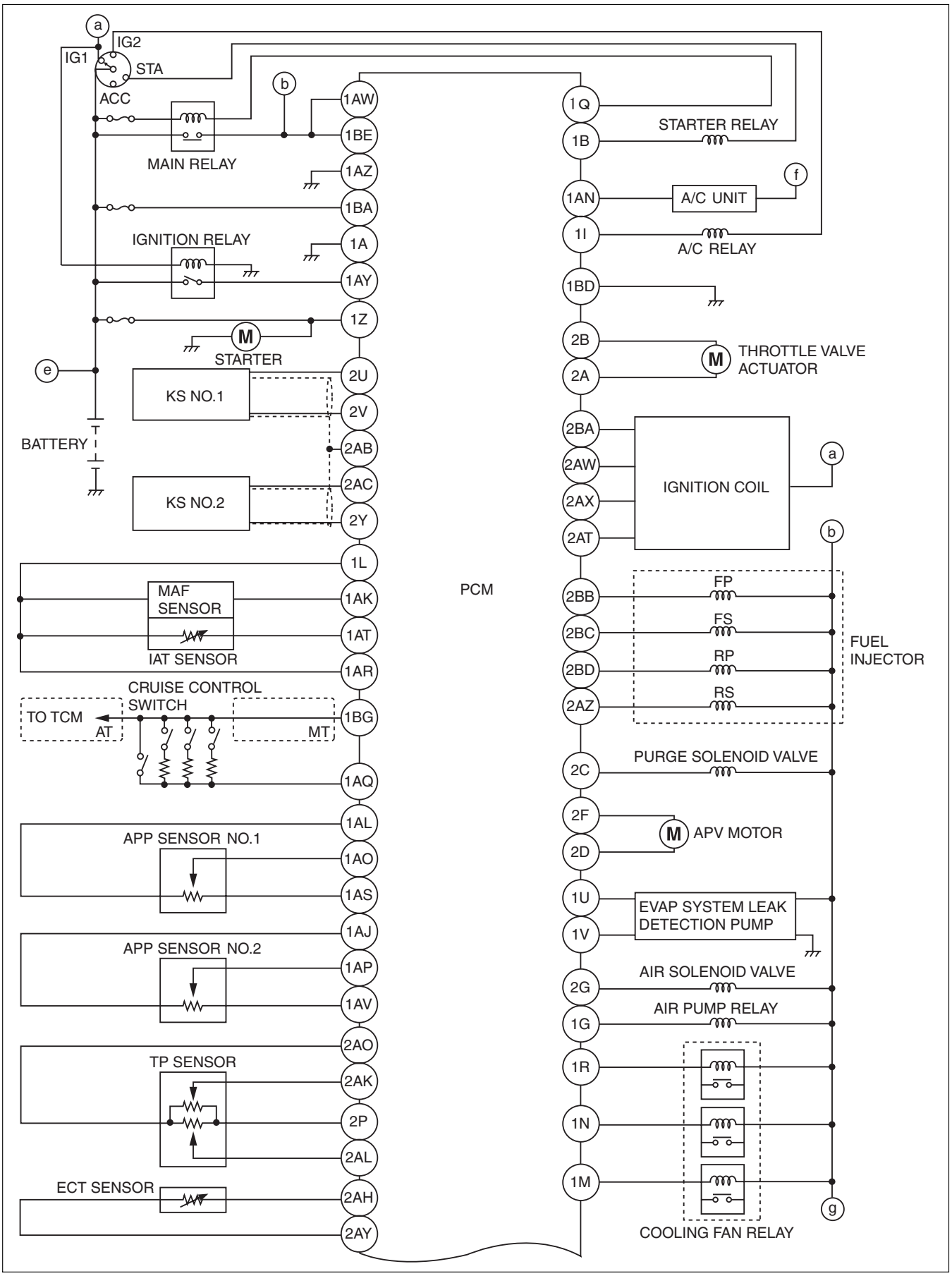

ar8uuw00002491

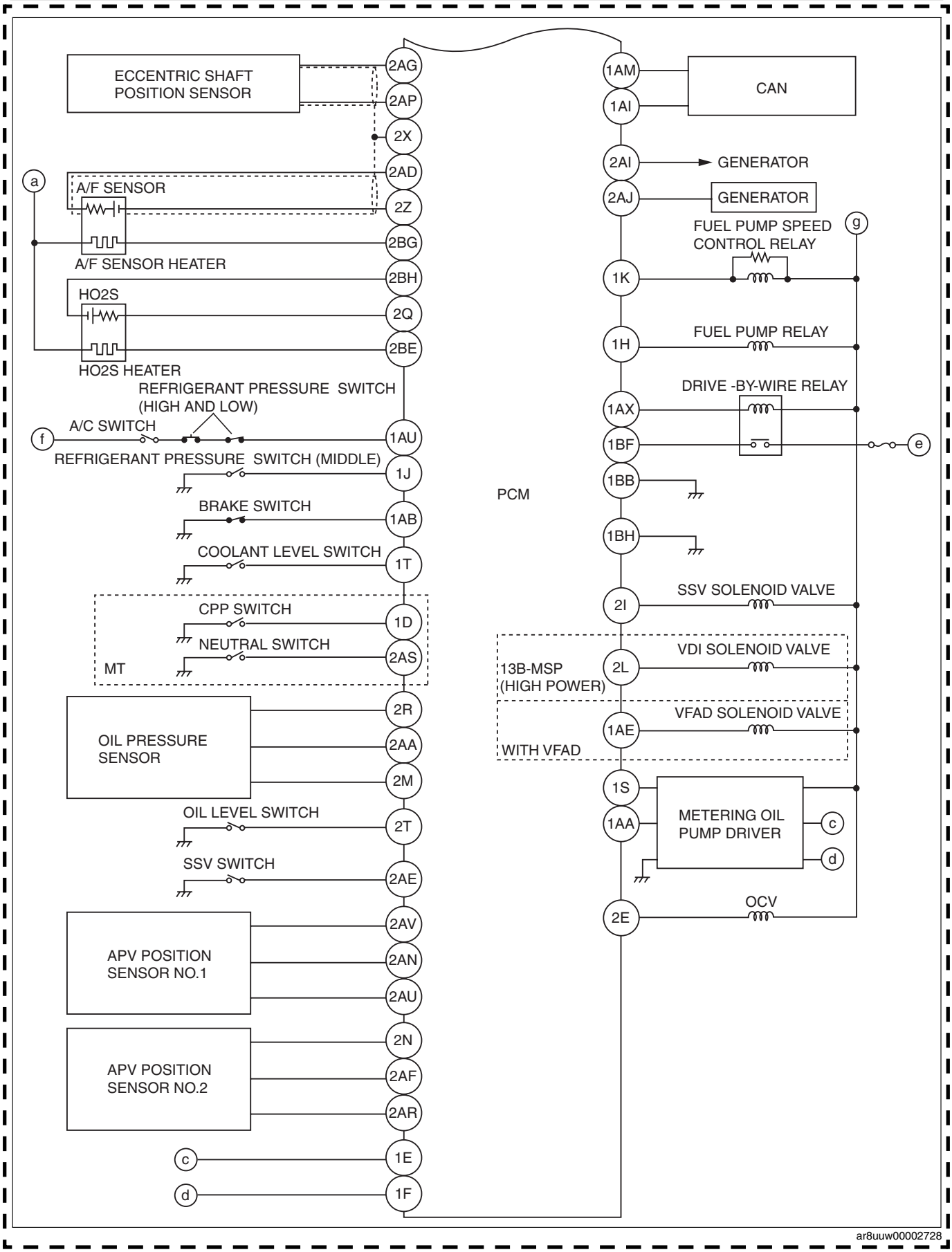
ECCENTRIC SHAFT POSITION SENSOR
2AG
2AP
2X
2AD
2Z
2BG
2BH
2Q
2BE
A/F SENSOR
A/F SENSOR HEATER
HO2S
HO2S HEATER
a
REFRIGERANT PRESSURE SWITCH (HIGH AND LOW)
A/C SWITCH
f
1AU
REFRIGERANT PRESSURE SWITCH (MIDDLE)
1J
BRAKE SWITCH
1AB
COOLANT LEVEL SWITCH
1T
CPP SWITCH
1D
NEUTRAL SWITCH
2AS
MT
OIL PRESSURE SENSOR
2R
2AA
2M
OIL LEVEL SWITCH
2T
SSV SWITCH
2AE
APV POSITION SENSOR NO.1
2AV
2AN
2AU
APV POSITION SENSOR NO.2
2N
2AF
2AR
c
1E
d
1F
PCM
1AM
1AI
CAN
2AI
GENERATOR
2AJ
GENERATOR
FUEL PUMP SPEED CONTROL RELAY
g
1K
FUEL PUMP RELAY
1H
DRIVE -BY-WIRE RELAY
1AX
1BF
e
1BB
1BH
SSV SOLENOID VALVE
2I
VDI SOLENOID VALVE
13B-MSP (HIGH POWER)
2L
VFAD SOLENOID VALVE
1AE
WITH VFAD
1S
1AA
METERING OIL PUMP DRIVER
c
d
OCV
2E
ar8uuw00002728

ON-BOARD DIAGNOSTIC SYSTEM TEST MODE [13B-MSP]

id0102g1100200

Sending Diagnostic Data

PID data monitor

- The PID data monitor items are shown below.

PID data monitor table

N/A: Not applicable

Full names		Unit	
2009MY	2008MY		
Monitor status since DTCs cleared	←	–	
Fuel system loop status	←	Refer to list below.	
LOAD	←	%	
ECT	←	°C	°F
Short term fuel trim	←	%	
Long term fuel trim	←	%	
Engine speed	←	rpm	
Vehicle speed	←	km/h	mph
Spark advance	←	°	
IAT	←	°C	°F
MAF	←	g/s	
Absolute TP	←	%	
AIR control status	←	–	
A/F sensor, HO2S location	←	–	
HO2S output	←	V	
		%	
OBD requirement according to vehicle design	←	–	
Time since engine start	←	s	
Distance travelled while MIL is activated	←	km	mile
Purge solenoid valve control signal	←	%	
Fuel tank level	←	%	
Number of warm-ups since DTCs cleared	←	–	
Distance travelled since DTCs cleared	←	km	mile
BARO	←	kPa	
A/F sensor output current	←	mA	
Estimated catalyst converter temperature	←	°C	°F
Monitor status this driving cycle	←	–	
PCM power supply voltage	←	V	
Absolute load value	←	%	
Command equivalence ratio	←	–	
Relative TP	←	%	
Ambient air temperature	←	°C	°F
TP from TP sensor No.2	←	%	
APP from APP sensor No.1	←	%	
APP from APP sensor No.2	←	%	
Throttle actuator control signal	←	%	

Meaning of fuel system loop status

- The following information is displayed on the tester.
  - — Feedback operating: A/F sensor, HO2S being used for feedback is normal.
  - — Feedback stops: ECT is lower than the determined feedback zone.
  - — Feedback stops: Open loop due to driving condition.
  - — Feedback stops: Open loop due to detected system fault.

On-board system readiness test

- The items supported by the on-board system readiness test are shown below.

  Continuous monitoring system
  - A/F sensor heater, HO2S heater
  - Fuel system
  - Misfire
  - CCM

  Intermittent monitoring system
  - A/F sensor, HO2S
  - AIR system
  - Catalyst
  - EVAP system
  - Thermostat

Sending Freeze Frame Data

- The Freeze Frame Data monitor items are shown below.

Freeze Frame Data monitor table

N/A: Not applicable

Full names		Unit	
2009MY	2008MY		
DTC that caused required Freeze Frame Data storage	←	–	
Fuel system loop status	←	Refer to list below.	
LOAD	←	%	
ECT	←	°C	°F
Short term fuel trim	←	%	
Long term fuel trim	←	%	
Engine speed	←	rpm	
Vehicle speed	←	km/h	mph
Spark advance	←	°	
IAT	←	°C	°F
MAF	←	g/s	
Absolute TP	←	%	
AIR control status	←	–	
HO2S output	←	V	
		%	
Time since engine start	←	s	
Purge solenoid valve control signal	←	%	
Fuel tank level	←	%	
Number of warm-ups since DTCs cleared	←	–	
Distance travelled since DTCs cleared	←	km	mile
BARO	←	kPa	
Estimated catalyst converter temperature	←	°C	°F
PCM power supply voltage	←	V	
Command equivalence ratio	←	–	
Absolute load value	←	%	
Relative TP	←	%	
Ambient air temperature	←	°C	°F
TP from TP sensor No.2	←	%	
APP from APP sensor No.1	←	%	
APP from APP sensor No.2	←	%	
Throttle actuator control signal	←	%	

Meaning of fuel system loop status

- The following information is displayed on the tester.
  - Feedback operating: A/F sensor, HO2S being used for feedback is normal.
  - Feedback stops: ECT is lower than the determined feedback zone.
  - Feedback stops: Open loop due to driving condition.
  - Feedback stops: Open loop due to detected system fault.

Sending Emission-related Malfunction Code

- The DTCs are shown below.

DTC table

N/A: Not applicable

DTC No.		Condition	MIL	Generator warning light	DC	Monitor item*1	Self test type*2	Memory function
2009MY	2008MY							
B1342	N/A	PCM malfunction	—	—	—	—	C, O	—
P0030	←	A/F sensor heater control circuit problem	ON	—	2	A/F sensor heater, HO2S heater	C	×
P0031	←	A/F sensor heater control circuit low input	ON	—	2	A/F sensor heater, HO2S heater	C, O, R	×
P0032	←	A/F sensor heater control circuit high input	ON	—	2	A/F sensor heater, HO2S heater	C, R	×
P0037	←	HO2S heater control circuit low input	ON	—	2	A/F sensor heater, HO2S heater	C, O, R	×
P0038	←	HO2S heater control circuit high input	ON	—	2	A/F sensor heater, HO2S heater	C, R	×
P0076*5	←	VDI solenoid valve control circuit low input	OFF	—	2	Other	C, O, R	×
P0077*5	←	VDI solenoid valve control circuit high input	OFF	—	2	Other	C	×
P0101	←	MAF sensor circuit range/ performance problem	ON	—	2	CCM	C	×
P0102	←	MAF sensor circuit low input	ON	—	1	CCM	C, R	×
P0103	←	MAF sensor circuit high input	ON	—	1	CCM	C, O, R	×
P0107	←	BARO sensor circuit low input	ON	—	1	CCM	C, O, R	×
P0108	←	BARO sensor circuit high input	ON	—	1	CCM	C, O, R	×
P0111	←	IAT sensor circuit range/performance problem	ON	—	2	CCM	C	×
P0112	←	IAT sensor circuit low input	ON	ON	1	CCM	C, O, R	×
P0113	←	IAT sensor circuit high input	ON	ON	1	CCM	C, O, R	×
P0116	←	ECT sensor circuit range/ performance problem	ON	—	2	Engine cooling system	C	×
P0117	←	ECT sensor circuit low input	ON	—	1	CCM	C, O, R	×
P0118	←	ECT sensor circuit high input	ON	—	1	CCM	C, O, R	×
P0122	←	TP sensor No.1 circuit low input	ON	—	1	CCM	C, O, R	×
P0123	←	TP sensor No.1 circuit high input	ON	—	1	CCM	C, O, R	×
P0125	←	Insufficient coolant temperature for closed loop fuel control	ON	—	2	Engine cooling system	C	×
P0126	←	Insufficient coolant temperature for stable operation	ON	—	2	Thermostat	C	×
P0130	←	A/F sensor circuit problem	ON	—	2	A/F sensor, HO2S	C, R	×
P0131	←	A/F sensor circuit low input	ON	—	2	A/F sensor, HO2S	C, R	×
P0132	←	A/F sensor circuit high input	ON	—	2	A/F sensor, HO2S	C, R	×
P0133	←	A/F sensor circuit slow response	ON	—	2	A/F sensor, HO2S	C	×
P0134	←	A/F sensor no activity detected	ON	—	2	A/F sensor, HO2S	C, R	×
P0137	←	HO2S circuit low input	ON	—	2	A/F sensor, HO2S	C	×
P0138	←	HO2S circuit high input	ON	—	2	A/F sensor, HO2S	C, O, R	×

DTC No.		Condition	MIL	Generator warning light	DC	Monitor item*1	Self test type*2	Memory function
2009MY	2008MY							
P0139	←	HO2S circuit slow response	ON	—	2	A/F sensor, HO2S	C	×
P0171	←	System too lean	ON	—	2	Fuel system	C, R	×
P0172	←	System too rich	ON	—	2	Fuel system	C, R	×
P0222	←	TP sensor No.2 circuit low input	ON	—	1	CCM	C, O, R	×
P0223	←	TP sensor No.2 circuit high input	ON	—	1	CCM	C, O, R	×
P0300	←	Random misfire detected	Flash/ ON	—	1 or 2	Misfire	C	×
P0301	←	Front rotor misfire detected	Flash/ ON	—	1 or 2	Misfire	C	×
P0302	←	Rear rotor misfire detected	Flash/ ON	—	1 or 2	Misfire	C	×
P0327	←	KS No.1 circuit low input	ON	—	1	CCM	C, O, R	×
P0328	←	KS No.1 circuit high input	ON	—	1	CCM	C, O, R	×
P0332	N/A	KS No.2 circuit low input	ON	—	1	CCM	C, O, R	×
P0333	N/A	KS No.2 circuit high input	ON	—	1	CCM	C, O, R	×
P0335	←	Eccentric shaft position sensor circuit problem	ON	—	1	CCM	C	×
P0336	←	Eccentric shaft position sensor circuit range/performance problem	ON	—	1	CCM	C, R	×
P0410	←	Secondary air injection system problem	ON	—	2	AIR system	C, R	×
P0411	←	Secondary air injection system incorrect upstream flow	ON	—	2	AIR system	C	×
P0420	←	Catalyst system efficiency below threshold	ON	—	2	Catalyst	C	×
P0441	←	EVAP system incorrect purge flow	ON	—	2	EVAP system	C, R	×
P0442	←	EVAP system leak detected (small leak)	ON	—	2	EVAP system	C, R	×
P0443	←	Purge solenoid valve circuit problem	ON	—	2	CCM	C, O, R	×
P0446	←	EVAP system vent control circuit problem	ON	—	2	EVAP system	C, R	×
P0455	←	EVAP system leak detected (large leak)	ON	—	2	EVAP system	C	×
P0456*3	←	EVAP system leak detected (very small leak)	ON	—	2	EVAP system	C	×
P0461	←	Fuel gauge sender unit (main) circuit range/performance problem	ON	—	2	CCM	C	×
P0462	←	Fuel gauge sender unit (main) circuit low input	ON	—	2	CCM	C, R	×
P0463	←	Fuel gauge sender unit (main) circuit high input	ON	—	2	CCM	C, R	×
P0480	←	Cooling fan relay No.1 control circuit problem	OFF	—	2	Other	C, O, R	×
P0481	←	Cooling fan relay No.2 and No.3 control circuit problem	OFF	—	2	Other	C, O, R	×
P0482	N/A	Cooling fan relay No.4 and No.5 control circuit problem	OFF	—	2	Other	C, O, R	×
P0500	←	VSS circuit problem	ON	—	2	CCM	C	×
P0505	←	Idle air control system problem	OFF	—	—	—	R	—
P0506	←	Idle air control system RPM lower than expected	ON	—	2	CCM	C	×
P0507	←	Idle air control system RPM higher than expected	ON	—	2	CCM	C	×
P050A	←	Cold start idle air control system performance	ON	—	2	CSERS	C	×
P0522	N/A	Oil pressure sensor low input	OFF	—	1	Other	C, O, R	×

DTC No.		Condition	MIL	Generator warning light	DC	Monitor item*1	Self test type*2	Memory function
2009MY	2008MY							
P0523	N/A	Oil pressure sensor high input	OFF	—	1	Other	C, O, R	×
P0562	←	System voltage low (KAM)	ON	—	1	CCM	C, O, R	×
P0564	←	Cruise control switch input circuit problem	OFF	—	1	Other	C, O, R	×
P0571	←	Brake switch input circuit problem	OFF	—	1	Other	C, O, R	×
P0601	←	PCM memory check sum error	ON	—	1	CCM	C, O, R	×
P0602	←	PCM programming error	ON	—	1	CCM	C, O, R	×
P0604	←	PCM random access memory error	ON	—	1	CCM	C, O, R	×
P0606	N/A	PCM processor error	ON	—	1	CCM	C, O, R	×
P0610	←	PCM vehicle configuration error	ON	—	1	CCM	C, O, R	×
P0638	←	Throttle actuator control circuit range/ performance problem	ON	—	1	CCM	C	×
P0661	←	SSV solenoid valve control circuit low	ON	—	2	CCM	C, O, R	×
P0662	←	SSV solenoid valve control circuit high	ON	—	2	CCM	C	×
P0703	←	Brake switch input circuit problem	ON	—	2	CCM	C	×
P0704*4	←	CPP switch input circuit problem	ON	—	2	CCM	C	×
P0850*4	←	Neutral switch input circuit problem	ON	—	2	CCM	C	×
P1260	←	Immobilizer system problem	OFF	—	1	Other	C, O	—
P1680	N/A	OCV circuit low input	OFF*6	—	1	Other	C, O, R	×
P1681	N/A	OCV circuit high input	OFF*6	—	1	Other	C, O, R	×
P1682	N/A	Metering oil pump No.1 circuit low input	OFF*6	—	1	Other	C, R	×
P1683	N/A	Metering oil pump No.1 circuit high input	OFF*6	—	1	Other	C, R	×
P1684	N/A	Metering oil pump oil pressure sensor –oil pressure is low	OFF*6	—	1	Other	C	×
P1685	N/A	Metering oil pump oil pressure sensor –oil pressure is high	OFF*6	—	1	Other	C	×
P1686	←	Metering oil pump No.2 circuit low input	OFF*6	—	1	Other	C, R	×
P1687	←	Metering oil pump No.2 circuit high input	OFF*6	—	1	Other	C, R	×
N/A	P1688	Metering oil pump control circuit initial check problem	ON	—	1	Other	C, R	×
P2004	←	APV stuck open (No.1)	ON	—	2	CCM	C, O, R	×
P2005	N/A	APV stuck open (No.2)	ON	—	2	CCM	C, O, R	×
N/A	P2006	APV motor control circuit IC problem	ON	—	2	CCM	C	×
P2009	←	APV motor control circuit low input	ON	—	2	CCM	C, O, R	×
P2010	←	APV motor control circuit high input	ON	—	2	CCM	C, O, R	×
N/A	P2016	APV position sensor circuit problem low input	ON	—	2	CCM	C, O, R	×
N/A	P2017	APV position sensor circuit problem	ON	—	2	CCM	C, O, R	×
P2067	←	Fuel gauge sender unit (sub) circuit low input	ON	—	2	CCM	C, R	×
P2068	←	Fuel gauge sender unit (sub) circuit high input	ON	—	2	CCM	C, R	×
P2070	←	SSV stuck open	ON	—	2	CCM	C, O, R	×
P2096	←	Target A/F feedback system too lean	ON	—	2	Fuel system	C	×
P2097	←	Target A/F feedback system too rich	ON	—	2	Fuel system	C	×
P2101	N/A	Throttle actuator circuit range/ performance	ON	—	1	CCM	C	×
N/A	P2102	Throttle actuator power supply line circuit low input	ON	—	1	CCM	C, O, R	×

DTC No.		Condition	MIL	Generator warning light	DC	Monitor item*1	Self test type*2	Memory function
2009MY	2008MY							
N/A	P2103	Throttle actuator power supply line circuit high input	ON	—	1	CCM	C, O, R	×
N/A	P2106	Throttle actuator control system–forced limited power	ON	—	1	CCM	C	×
P2107	←	Throttle actuator control module processor error	ON	—	1	CCM	C, O, R	×
P2108	←	Throttle actuator control module performance error	ON	—	1	CCM	C, O, R	×
P2109	←	TP sensor minimum stop range/performance problem	ON	—	1	CCM	C, O, R	×
P2112	←	Throttle actuator control system range/performance problem	ON	—	1	CCM	C, O, R	×
P2119	←	Throttle actuator control throttle body range/performance problem	ON	—	2	CCM	C, O, R	×
P2122	←	APP sensor No.1 circuit low input	ON	—	1	CCM	C, O, R	×
P2123	←	APP sensor No.1 circuit high input	ON	—	1	CCM	C, O, R	×
P2127	←	APP sensor No.2 circuit low input	ON	—	1	CCM	C, O, R	×
P2128	←	APP sensor No.2 circuit high input	ON	—	1	CCM	C, O, R	×
P2135	←	TP sensor No.1/No.2 voltage correlation problem	ON	—	1	CCM	C, O, R	×
N/A	P2136	TP sensor No.1/No.3 voltage correlation problem	ON	—	1	CCM	C, O, R	×
P2138	←	APP sensor No.1/No.2 voltage correlation problem	ON	—	1	CCM	C, O, R	×
P2195	←	A/F sensor signal stuck lean	ON	—	2	A/F sensor, HO2S	C	×
P2196	←	A/F sensor signal stuck rich	ON	—	2	A/F sensor, HO2S	C	×
P2257	←	AIR pump relay control circuit low	ON	—	2	AIR system	C, O, R	×
P2258	←	AIR pump relay control circuit high	ON	—	2	AIR system	C, R	×
P2259	←	AIR solenoid valve control circuit low	ON	—	2	AIR system	C, O, R	×
P2260	←	AIR solenoid valve control circuit high	ON	—	2	AIR system	C, R	×
P2270	←	HO2S signal stuck lean	ON	—	2	A/F sensor, HO2S	C	×
P2271	←	HO2S signal stuck rich	ON	—	2	A/F sensor, HO2S	C	×
P2401	←	EVAP system leak detection pump control circuit low	ON	—	2	EVAP system	C, R	×
P2402	←	EVAP system leak detection pump control circuit high	ON	—	2	EVAP system	C, R	×
P2404	←	EVAP system leak detection pump sense circuit range/performance problem	ON	—	2	EVAP system	C, R	×
P2405	←	EVAP system leak detection pump sense circuit low	ON	—	2	EVAP system	C, R	×
P2407	←	EVAP system leak detection pump sense circuit intermittent/erratic problem	ON	—	2	EVAP system	C, R	×
P2502	←	Charging system voltage problem	OFF	ON	1	Other	C, R	×
P2503	←	Charging system voltage low	OFF	ON	1	Other	C, R	×
P2504	←	Charging system voltage high	OFF	ON	1	Other	C, R	×

*1 : Indicates the applicable item in the On-Board System Readiness Test as defined by CARB.
*2 : C: CMDTC self test, O: KOEO self test, R: KOER self test
*3 : California emission regulation applicable model
*4 : MT
*5 : 13B-MSP (high power)
*6 : Oil level warning light flashes

Sending Intermittent Monitoring System Test Results

- The items supported by the sending intermittent monitoring system are shown below.

OBD monitor ID		Test ID	Description	Related system	Scaling ID	Unit
2009MY	2008MY					
01	←	80	Response lean to rich	A/F sensor	20	Ratio
01	←	81	Response rich to lean		20	Ratio
01	←	82	Response lean to rich delayed		10	Time
01	←	83	Response rich to lean delayed		10	Time
02	←	03	Low sensor voltage for switch time calculation	HO2S	0A	Voltage
02	←	04	High sensor voltage for switch time calculation		0A	Voltage
02	←	05	Rich to lean sensor switching time		10	Time
02	N/A	80	Response timeout		10	Time
21	←	80	Rear to front switching ratio	Catalyst	20	Ratio
3A	←	80	Large leak check	EVAP system	0D	Current
3B	←	80	Small leak check		0D	Current
3C*1	←	80	Very small leak check		05	Raw value
3D	←	80	Purge flow monitor		0D	Current
71	←	80	Secondary air functional check	AIR system	10	Time
71	←	81	Secondary air flow rate check		86	Raw value
A2	←	0B	Exponentially weighted moving average misfire counts for last 10 driving cycles (front rotor)	Misfire	24	Counts
A2	←	0C	Misfire counts for last/current driving cycles (front rotor)		24	Counts
A3	←	0B	Exponentially weighted moving average misfire counts for last 10 driving cycles (rear rotor)		24	Counts
A3	←	0C	Misfire counts for last/current driving cycles (rear rotor)		24	Counts

*1 : California emission regulation applicable model

DTC DETECTION LOGIC AND CONDITIONS [13B-MSP]

id0102g1100300

- The detection condition of the following DTC has been changed from 2008MY.

B1342 PCM malfunction

- Malfunction in the PCM internal circuit.

P0030 A/F sensor heater control circuit problem

- The PCM monitors the A/F sensor impedance when under the A/F sensor heater control for **190 s**. If the impedance is more than **44 ohms** while PCM turns A/F sensor heater on, the PCM determines that there is a A/F sensor heater control circuit problem.

P0031 A/F sensor heater control circuit low input

- The input voltage to the A/F sensor heater drive terminal in the PCM is at the set value or less for **1 s or more** even though the A/F sensor heater is duty-controlled at **under 90 %** by the PCM.

P0032 A/F sensor heater control circuit high input

- The input voltage to the A/F sensor heater drive terminal in the PCM is at the set value or more for **1 s or more** even though the A/F sensor heater is duty-controlled at **10 % or more** by the PCM.

P0037 HO2S heater control circuit low input

- The input voltage to the HO2S heater drive terminal in the PCM is at the set value or less for **0.5 s or more** even though the HO2S heater is duty-controlled at **under 90 %** by the PCM.

P0038 HO2S heater control circuit high input

- The input voltage to the HO2S heater drive terminal in the PCM is at the set value or more for **0.5 s or more** even though the HO2S heater is duty-controlled at **10% or more** by the PCM.

P0103 MAF sensor circuit high input

- The PCM monitors the input voltage from the MAF sensor when the engine is running. If the input voltage is **more than 5.0 V**, the PCM determines that the MAF sensor circuit input voltage is high.

P0107 BARO sensor circuit low input

- The PCM monitors the input voltage from the BARO sensor when the engine is running. If the input voltage is **less than 2.09 V**, the PCM determines that the BARO sensor circuit input voltage is low.

P0108 BARO sensor circuit high input
- The PCM monitors the input voltage from the BARO sensor when the engine is running. If the input voltage is **more than 4.02 V**, the PCM determines that the BARO sensor circuit input voltage is high.

P0130 A/F sensor circuit problem
- The PCM monitors the A/F sensor impedance when under the A/F sensor heater control. If the impedance is **more than 500 ohms**, the PCM determines that there is a A/F sensor circuit problem.

P0131 A/F sensor circuit low input
- Detect any of the following condition:
  — The input voltage to the A/F sensor positive terminal is **1.128 V or less**.
  — The input voltage to the A/F sensor negative terminal is **0.044 V or less**.
  — The electric potential difference between the A/F sensor positive and negative terminals is **0 V or less**.

P0132 A/F sensor circuit high input
- Detect any of the following condition:
  — The input voltage to the A/F sensor positive terminal is **3.589 V or more**.
  — The input voltage to the A/F sensor negative terminal is **3.541 V or more**.

P0133 A/F sensor circuit slow response
- The A/F sensor output signal reacts at a slower timing than expected from the fuel feedback amount.
  MONITORING CONDITIONS
  — A/F sensor heater monitor: completed
  — Fuel system loop status: closed loop fuel control
  — Engine speed: **1,500–4,000 rpm**
  — LOAD: **21.7–64.7 %**

P0134 A/F sensor no activity detected
- The PCM monitors the A/F sensor element impedance when the following conditions are met. If the A/F sensor element impedance is **50 ohms or more**, the PCM determines that A/F sensor is not activated.
  MONITORING CONDITIONS
  — A/F sensor heater, HO2S heater, A/F sensor, HO2S, and TWC Repair Verification Drive Mode
  — Following conditions are met:
    - Time from engine start is **above 40 s** (ECT when engine start is **20 °C {68 °F}**).

P0137 HO2S circuit low input
- The PCM monitors input voltage from HO2S. If the input voltage from the HO2S is **below 0.1 V** for **35.2 s** the PCM determines that circuit input is low.
  MONITORING CONDITIONS
  — A/F sensor heater, HO2S heater, A/F sensor, HO2S, and TWC Repair Verification Drive Mode
  — Following conditions are met:
    - Engine speed is **above 1,500 rpm**.
    - Engine coolant temperature is **above 70 °C {158 °F}**.
    - Fuel injector control in HO2S closed loop control.
- The PCM monitors the input voltage from the HO2S when the following conditions are met. Under the following monitoring conditions, if the input voltage from the HO2S does not even **exceed 0.1 V** though the short term fuel trim is controlled, the PCM determines that sensor circuit input is low.
  MONITORING CONDITIONS
  — A/F sensor heater, HO2S heater, A/F sensor, HO2S, and TWC Repair Verification Drive Mode
  — Following conditions are met for **above 20.8 s**:
    - Engine speed is **above 1,500 rpm**.
    - Engine coolant temperature is **above 70 °C {158 °F}**.

P0138 HO2S circuit high input
- The PCM monitors the input voltage from the HO2S when the engine is running. If the input voltage is **more than 1.2 V**, the PCM determines that the HO2S circuit voltage is high.

P0139 HO2S circuit slow response
- The PCM monitors the HO2S inversion cycle period and rich-to-lean response time while under the open loop fuel control (fuel cut off control). If the average response time is more than the specification, the PCM determines that the HO2S circuit response is slow.

P0327 KS No.1 circuit low input
- The PCM monitors the input voltage from the KS No.1 when the engine is running. If the input voltage is **less than 1.2 V**, the PCM determines that the KS No.1 circuit input voltage is low.

P0328 KS No.1 circuit high input
- The PCM monitors the input voltage from the KS No.1 when the engine is running. If the input voltage is **more than 4.0 V**, the PCM determines that the KS No.1 circuit input voltage is high.

P0332 KS No.2 circuit low input
- The PCM monitors the input voltage from the KS No.2 when the engine is running. If the input voltage is **less than 1.2 V**, the PCM determines that the KS No.2 circuit input voltage is low.

P0333 KS No.2 circuit high input

- The PCM monitors the input voltage from the KS No.2 when the engine is running. If the input voltage is **more than 4.0 V**, the PCM determines that the KS No.2 circuit input voltage is high.

P0420 Catalyst system efficiency below threshold

- The PCM monitors the input voltage from the HO2S and the A/F sensor output current when the following conditions are met. If the input voltage change is extremely large compared to the output current change, the PCM determines that the catalyst system has deteriorated.
  MONITORING CONDITIONS
  — ECT: **more than 70 °C {158 °F}**
  — Catalyst converter temperature: **more than 400 °C {752 °F}**
  — Engine speed: **less than 5,000 rpm**
  — LOAD: **20–50 %** (maximum calculated load value varies depending on engine speed)
  — Time with purge control system does not operate: **more than 20 s**

P0441 EVAP system incorrect purge flow

- The PCM monitors the purge line vacuum, when the following conditions are met. If the vacuum between the charcoal canister and the intake manifold does not reach the specification, the PCM determines that the EVAP system purge flow is incorrect.
  MONITORING CONDITIONS
  — Vehicle speed: **70.1–130 km/h {43.5–80.8 mph}**
  — Engine speed: **1,200–4,000 rpm**
  — Throttle valve opening angle: **10.2–27.7 %** (changes by engine speed)

P0442 EVAP system leak detected (small leak)

- The PCM monitors the pump load current (EVAP line pressure) when the specified period has passed after the EVAP system is sealed when the following conditions are met. If the pump load current does not reach the reference current value within the specified period, the PCM determines that the EVAP system has small leak.
  MONITORING CONDITIONS
  — BARO: **more than 72 kPa {542 mmHg, 21.33 inHg}**
  — IAT: **5–40 °C {41–104 °F}**
  — Fuel tank level: **15–85 %**
  — Battery voltage: **11.0–20.0 V**
  — Ignition switch: OFF

P0443 Purge solenoid valve circuit problem

- Detect any of the following condition:
  — The control voltage of the purge solenoid valve is less than specification even though the purge solenoid valve is off.
  — The current in the output driver IC over-current detection circuit **above 3.5 A** even though the purge solenoid valve is ON.

P0455 EVAP system leak detected (large leak)

- The PCM monitors the pump load current (EVAP line pressure) when the specified period has passed after EVAP system is sealed when the following conditions are met. If the pump load current does not reach the reference current value within the specified period, the PCM determines that the EVAP system has a large leak.
  MONITORING CONDITIONS
  — BARO: **more than 72 kPa {542 mmHg, 21.33 inHg}**
  — IAT: **5–40 °C {41–104 °F}**
  — Fuel tank level: **15–85 %**
  — Battery voltage: **11.0–20.0 V**
  — Ignition switch: OFF

P0456 EVAP system leak detected (very small leak)

- The PCM monitors the pump load current (EVAP line pressure) when a specified period has passed after EVAP system is sealed after the ignition switch is turned off. If the pump load current does not reach the reference load value or the rate of the load increase is lower than specified within a specified period, the PCM determines that the EVAP system has a very small leak.
  MONITORING CONDITIONS
  — BARO: **more than 72 kPa {542 mmHg, 21.33 inHg}**
  — IAT: **5–40 °C {41–104 °F}**
  — Fuel tank level: **15–85 %**
  — Battery voltage: **11.0–20.0 V**
  — Ignition switch: OFF

P0480 Cooling fan relay No.1 control circuit problem

- The PCM monitors the cooling fan relay No.1 control voltage when the PCM turns the cooling fan relay No.1 off. If the control voltage is low, the PCM determines that the cooling fan No.1 control circuit voltage is low.
- The PCM monitors the cooling fan relay No.1 control voltage when the PCM turns the cooling fan relay No.1 on. If the control voltage is high, the PCM determines that the cooling fan No.1 control circuit voltage is high.

P0481 Cooling fan relay No.2 and No.3 control circuit problem
- The PCM monitors the cooling fan relay No.2/No.3 control voltage when the PCM turns the cooling fan relay No.2/No.3 off. If the control voltage is low, the PCM determines that the cooling fan No.2/No.3 control circuit voltage is low.
- The PCM monitors the cooling fan relay No.2/No.3 control voltage when the PCM turns the cooling fan relay No.2/No.3 on. If the control voltage is high, the PCM determines that the cooling fan No.2/No.3 control circuit voltage is high.

P0482 Cooling fan relay No.4 and No.5 control circuit problem
- The PCM monitors the cooling fan relay No.4/No.5 control voltage when the PCM turns the cooling fan relay No.4/No.5 off. If the control voltage is low, the PCM determines that the cooling fan No.4/No.5 control circuit voltage is low.
- The PCM monitors the cooling fan relay No.4/No.5 control voltage when the PCM turns the cooling fan relay No.4/No.5 on. If the control voltage is high, the PCM determines that the cooling fan No.4/No.5 control circuit voltage is high.

P0522 Oil pressure sensor low input
- The voltage of oil pressure sensor input terminal is **less than 0.2 V** for **0.5 s or more**.

P0523 Oil pressure sensor high input
- The voltage of oil pressure sensor input terminal is **more than 4.8 V** for **0.5 s or more**.

P0606 PCM processor error
- PCM internal CPU malfunction.

P0662 SSV solenoid valve control circuit high
- The current in the output driver IC over-current detection circuit **above 1.5 A** even though the SSV solenoid valve is ON.

P1260 Immobilizer system problem
- The keyless control module detects an immobilizer system malfunction (vehicle with advanced keyless and start system).
- The instrument cluster detects an immobilizer system malfunction (vehicle with keyless entry system).

P1680 OCV circuit low input
- The PCM monitors input voltage from the OCV. If the voltage of the OCV input terminal is less than the specification for **1 s** when the battery voltage is **more than 10 V**, the PCM determines the OCV circuit voltage is low.

P1681 OCV circuit high input
- The PCM monitors input voltage from the OCV. If the OCV current is **more than 3.5 A** for **2 s** when the battery voltage is **more than 10 V**, the PCM determines the OCV circuit has a malfunction.

P1682 Metering oil pump No.1 circuit low input
- The PCM monitors the input voltage from the metering oil pump No.1 when the battery voltage is **more than 8 V** and the metering oil pump No.1 control signal turned from ON to OFF. If the input voltage is less than the specification, the PCM determines that the metering oil pump No.1 circuit has a malfunction.

P1683 Metering oil pump No.1 circuit high input
- The PCM monitors the input voltage from the metering oil pump No.1 when the battery voltage is **more than 8 V** and the metering oil pump No.1 control signal turned from ON to OFF. If the input voltage is more than the specification, the PCM determines that the metering oil pump No.1 circuit has a malfunction.

P1684 Metering oil pump oil pressure sensor–oil pressure is low
- It is that the oil pressure at the metering oil pump system is **less than 40 kPa {0.41 kgf/cm^2, 5.8 psi}** continues for **10 s**, after specified period passes after the engine starts.

P1685 Metering oil pump oil pressure sensor–oil pressure is high
- It is that the oil pressure at the metering oil pump system is **more than 180 kPa {1.84 kgf/cm^2, 26.1 psi}** continues for **10 s**, after specified period passes after the engine starts.

P1686 Metering oil pump No.2 circuit low input
- The PCM monitors the input voltage from the metering oil pump No.2 when the battery voltage is **more than 8 V** and the metering oil pump No.2 control signal turned from ON to OFF. If the input voltage is less than the specification, the PCM determines that the metering oil pump No.2 circuit has a malfunction.

P1687 Metering oil pump No.2 circuit high input
- The PCM monitors the input voltage from the metering oil pump No.2 when the battery voltage is **more than 8 V** and the metering oil pump No.2 control signal turned from OFF to ON. If the input voltage is more than the specification, the PCM determines that the metering oil pump No.2 circuit has a malfunction.

P2004 APV stuck open (No.1)
- The PCM monitors the input voltage from the APV position sensor No.1 when the APV is closed. If the input voltage is **more than 1.0 V**, the PCM determines that the APV is stuck open.

P2005 APV stuck open (No.2)
- The PCM monitors the input voltage from the APV position sensor No.2 when the APV is closed. If the input voltage is **more than 1.0 V**, the PCM determines that the APV is stuck open.

P2009 APV motor control circuit low input
- Detect any of the following condition:
  — The PCM terminal 2D voltage is not **within 3.6 to 4.39 V** when the APV motor is operating (open).
  — The PCM terminal 2F voltage is not **within 3.6 to 4.39 V** when the APV motor is operating (closed).
  — The PCM terminal 2D, 2F voltage is **4.39 V or more** respectively when the APV motor is not operating.

P2010 APV motor control circuit high input
- The PCM monitors the APV motor control current when the engine is running. If the driver IC current is **more than 10 A** for **5 s**, the PCM determines that there is an APV motor control circuit malfunction.

P2101 Throttle actuator circuit range/performance
- Detect any of the following condition:
  — The voltage is not supplied to throttle body even though the drive-by-wire power supply is ON.
  — The voltage is supplied to throttle body even though the drive-by-wire power supply is off.

P2122 APP sensor No.1 circuit low input
- The PCM monitors the input voltage from the APP sensor No.1 when the engine is running. If the input voltage is **less than 0.3 V**, the PCM determines that the APP sensor No.1 circuit input voltage is low.

P2127 APP sensor No.2 circuit low input
- The PCM monitors the input voltage from the APP sensor No.2 when the engine is running. If the input voltage is **less than 0.3 V**, the PCM determines that the APP sensor No.2 circuit input voltage is low.

P2138 APP sensor No.1/No.2 voltage correlation problem
- The PCM compares the input voltage from APP sensor No.1 with the input voltage from APP sensor No.2 when the engine is running. If the difference is more than the specification, the PCM determines that there is a APP sensor No.1/No.2 voltage correlation problem.

P2195 A/F sensor signal stuck lean
- The PCM monitors the A/F sensor output current when the following conditions are met. If the average output current is **more than 1.15 A** for **25 s**, the PCM determines that the A/F sensor signal remains lean.
  MONITORING CONDITIONS
  — ECT: **more than 70 °C {158 °F}**
  — Engine speed: **1,000–3,200 rpm**
  — MAF amount: **6–80 g/s {0.80–10.58 lb/min}**
  — Target A/F feedback system status: feedback control
  — Input voltage from the HO2S: **more than 0.7 V**

P2196 A/F sensor signal stuck rich
- The PCM monitors the A/F sensor output current when the following conditions are met. If the average output current is **less than 0.85 A** for **25 s**, the PCM determines that the A/F sensor signal remains rich.
  MONITORING CONDITIONS
  — ECT: **more than 70 °C {158 °F}**
  — Engine speed: **1,000–3,200 rpm**
  — MAF amount: **6–80 g/s {0.80–10.58 lb/min}**
  — Target A/F feedback system status: feedback control
  — Input voltage from the HO2S: **less than 0.2 V**

P2257 AIR pump relay control circuit low
- The PCM monitors the AIR pump relay control voltage when the AIR pump is not operating. If the control voltage is less than the specification, the PCM determines that the AIR pump relay control circuit voltage is low.

P2258 AIR pump relay control circuit high
- Detect the **1.5 A or more** in the output driver IC over-current detection circuit even though the AIR pump is not operating.

P2259 AIR solenoid valve control circuit low
- The PCM monitors the AIR solenoid valve control voltage when the AIR pump is not operating. If the control voltage is **less than 3.5 V**, the PCM determines that the AIR solenoid valve control circuit voltage is low.

P2260 AIR solenoid valve control circuit high
- Detect the **3 A or more** in the output driver IC over-current detection circuit even though the AIR pump is operating.

P2270 HO2S signal stuck lean
- The PCM monitors the input voltage from the HO2S when the following conditions are met. If the input voltage is **less than 0.4 V** for **40 s**, the PCM determines that the HO2S signal remains lean.
  MONITORING CONDITIONS
  — ECT: **more than 70 °C {158 °F}**
  — Engine speed: **more than 1,500 rpm**
  — MAF amount: **more than 10 g/s {1.32 lb/min}**
  — Short term fuel trim: **–20–20 %**
  — Long term fuel trim: **–50–50 %**
  — Target A/F feedback system status: feedback control

P2271 HO2S signal stuck rich

- The PCM monitors the input voltage from the HO2S when the following conditions are met. If the input voltage is **more than 0.85 V** for **40 s**, the PCM determines that the HO2S signal remains rich.
  MONITORING CONDITIONS
  — ECT: **more than 70 °C {158 °F}**
  — Engine speed: **more than 1,500 rpm**
  — MAF amount: **more than 10 g/s {1.32 lb/min}**
  — Short term fuel trim: **–20–20 %**
  — Long term fuel trim: **–50–50 %**
  — Target A/F feedback system status: feedback control

KOEO/KOER SELF-TEST [13B-MSP]

id0102g1100400

KOEO/KOER self-test table

N/A: Not applicable

DTC No.		Condition	Test condition	
2009MY	2008MY		KOEO	KOER
B1342	N/A	PCM malfunction	×	—
P0030	←	A/F sensor heater control circuit problem	—	—
P0031	←	A/F sensor heater control circuit low input	×	×
P0032	←	A/F sensor heater control circuit high input	—	×
P0037	←	HO2S heater control circuit low input	×	×
P0038	←	HO2S heater control circuit high input	—	×
P0076*3	←	VDI solenoid valve control circuit low input	×	×
P0077*3	←	VDI solenoid valve control circuit high input	—	—
P0101	←	MAF sensor circuit range/performance problem	—	—
P0102	←	MAF sensor circuit low input	—	×
P0103	←	MAF sensor circuit high input	×	×
P0107	←	BARO sensor circuit low input	×	×
P0108	←	BARO sensor circuit high input	×	×
P0111	←	IAT sensor circuit range/performance problem	—	—
P0112	←	IAT sensor circuit low input	×	×
P0113	←	IAT sensor circuit high input	×	×
P0116	←	ECT sensor circuit range/performance problem	—	—
P0117	←	ECT sensor circuit low input	×	×
P0118	←	ECT sensor circuit high input	×	×
P0122	←	TP sensor No.1 circuit low input	×	×
P0123	←	TP sensor No.1 circuit high input	×	×
P0125	←	Insufficient coolant temperature for closed loop fuel control	—	—
P0126	←	Insufficient coolant temperature for stable operation	—	—
P0130	←	A/F sensor circuit problem	—	×
P0131	←	A/F sensor circuit low input	—	×
P0132	←	A/F sensor circuit high input	—	×
P0133	←	A/F sensor circuit slow response	—	—
P0134	←	A/F sensor no activity detected	—	×
P0137	←	HO2S circuit low input	—	—
P0138	←	HO2S circuit high input	×	×
P0139	←	HO2S circuit slow response	—	—
P0171	←	System too lean	—	×
P0172	←	System too rich	—	×
P0222	←	TP sensor No.2 circuit low input	×	×
P0223	←	TP sensor No.2 circuit high input	×	×
P0300	←	Random misfire detected	—	—
P0301	←	Front rotor misfire detected	—	—
P0302	←	Rear rotor misfire detected	—	—
P0327	←	KS No.1 circuit low input	×	×
P0328	←	KS No.1 circuit high input	×	×

DTC No.		Condition	Test condition	
2009MY	2008MY		KOEO	KOER
P0332	N/A	KS No.2 circuit low input	×	×
P0333	N/A	KS No.2 circuit high input	×	×
P0335	←	Eccentric shaft position sensor circuit problem	—	—
P0336	←	Eccentric shaft position sensor circuit range/performance problem	—	×
P0410	←	Secondary air injection system problem	—	×
P0411	←	Secondary air injection system incorrect upstream flow	—	—
P0420	←	Catalyst system efficiency below threshold	—	—
P0441	←	EVAP system incorrect purge flow	—	×
P0442	←	EVAP system leak detected (small leak)	—	×
P0443	←	Purge solenoid valve circuit problem	×	×
P0446	←	EVAP system vent control circuit problem	—	×
P0455	←	EVAP system leak detected (large leak)	—	—
P0456*1	←	EVAP system leak detected (very small leak)	—	—
P0461	←	Fuel gauge sender unit (main) circuit range/performance problem	—	—
P0462	←	Fuel gauge sender unit (main) circuit low input	—	×
P0463	←	Fuel gauge sender unit (main) circuit high input	—	×
P0480	←	Cooling fan relay No.1 control circuit problem	×	×
P0481	←	Cooling fan relay No.2 and No.3 control circuit problem	×	×
P0482	N/A	Cooling fan relay No.4 and No.5 control circuit problem	×	×
P0500	←	VSS circuit problem	—	—
P0505	←	Idle air control system problem	—	×
P0506	←	Idle air control system RPM lower than expected	—	—
P0507	←	Idle air control system RPM higher than expected	—	—
P050A	←	Cold start idle air control system performance	—	—
P0522	N/A	Oil pressure sensor low input	×	×
P0523	N/A	Oil pressure sensor high input	×	×
P0562	←	System voltage low (KAM)	×	×
P0564	←	Cruise control switch input circuit problem	×	×
P0571	←	Brake switch input circuit problem	×	×
P0601	←	PCM memory check sum error	×	×
P0602	←	PCM programming error	×	×
P0604	←	PCM random access memory error	×	×
P0606	N/A	PCM processor error	×	×
P0610	←	PCM vehicle configuration error	×	×
P0638	←	Throttle actuator control circuit range/performance problem	—	—
P0661	←	SSV solenoid valve control circuit low	×	×
P0662	←	SSV solenoid valve control circuit high	—	—
P0703	←	Brake switch input circuit problem	—	—
P0704*2	←	CPP switch input circuit problem	—	—
P0850*2	←	Neutral switch input circuit problem	—	—
P1260	←	Immobilizer system problem	×	—
P1680	N/A	OCV circuit low input	×	×
P1681	N/A	OCV circuit high input	×	×
P1682	N/A	Metering oil pump No.1 circuit low input	—	×
P1683	N/A	Metering oil pump No.1 circuit high input	—	×
P1684	N/A	Metering oil pump oil pressure sensor –oil pressure is low	—	—
P1685	N/A	Metering oil pump oil pressure sensor –oil pressure is high	—	—
P1686	←	Metering oil pump No.2 circuit low input	—	×
P1687	←	Metering oil pump No.2 circuit high input	—	×
N/A	P1688	Metering oil pump control circuit initial check problem	—	×
P2004	←	APV stuck open (No.1)	×	×
P2005	N/A	APV stuck open (No.2)	×	×

DTC No.		Condition	Test condition	
2009MY	2008MY		KOEO	KOER
N/A	P2006	APV motor control circuit IC problem	—	—
P2009	←	APV motor control circuit low input	×	×
P2010	←	APV motor control circuit high input	×	×
N/A	P2016	APV position sensor circuit low input	×	×
N/A	P2017	APV position sensor circuit problem	×	×
P2067	←	Fuel gauge sender unit (sub) circuit low input	—	×
P2068	←	Fuel gauge sender unit (sub) circuit high input	—	×
P2070	←	SSV stuck open	×	×
P2096	←	Target A/F feedback system too lean	—	—
P2097	←	Target A/F feedback system too rich	—	—
P2101	N/A	Throttle actuator circuit range/performance	—	—
N/A	P2102	Throttle actuator power supply line circuit low input	×	×
N/A	P2103	Throttle actuator power supply line circuit high input	×	×
N/A	P2106	Throttle actuator control system–forced limited power	—	—
P2107	←	Throttle actuator control module processor error	×	×
P2108	←	Throttle actuator control module performance error	×	×
P2109	←	TP sensor minimum stop range/performance problem	×	×
P2112	←	Throttle actuator control system range/performance problem	×	×
P2119	←	Throttle actuator control throttle body range/performance problem	×	×
P2122	←	APP sensor No.1 circuit low input	×	×
P2123	←	APP sensor No.1 circuit high input	×	×
P2127	←	APP sensor No.2 circuit low input	×	×
P2128	←	APP sensor No.2 circuit high input	×	×
P2135	←	TP sensor No.1/No.2 voltage correlation problem	×	×
N/A	P2136	TP sensor No.1/No.3 voltage correlation problem	×	×
P2138	←	APP sensor No.1/No.2 voltage correlation problem	×	×
P2195	←	A/F sensor signal stuck lean	—	—
P2196	←	A/F sensor signal stuck rich	—	—
P2257	←	AIR pump relay control circuit low	×	×
P2258	←	AIR pump relay control circuit high	—	×
P2259	←	AIR solenoid valve control circuit low	×	×
P2260	←	AIR solenoid valve control circuit high	—	×
P2270	←	HO2S signal stuck lean	—	—
P2271	←	HO2S signal stuck rich	—	—
P2401	←	EVAP system leak detection pump control circuit low	—	×
P2402	←	EVAP system leak detection pump control circuit high	—	×
P2404	←	EVAP system leak detection pump sense circuit range/performance problem	—	×
P2405	←	EVAP system leak detection pump sense circuit low	—	×
P2407	←	EVAP system leak detection pump sense circuit intermittent/erratic problem	—	×
P2502	←	Charging system voltage problem	—	×
P2503	←	Charging system voltage low	—	×
P2504	←	Charging system voltage high	—	×

*1 : California emission regulation applicable model
*2 : MT
*3 : 13B-MSP (high power)

PID/DATA MONITOR AND RECORD [13B-MSP]

id0102g1100500

- The PID/DATA monitor items are shown below.

PID/DATA monitor item table

N/A: Not applicable

Item		Definition	Unit/Condition	PCM terminal
2009MY	2008MY			
ACCS	←	A/C relay control signal in PCM	On/Off	1I
AC_REQ	N/A	A/C request signal	On/Off	1AU
N/A	ACSW	Input signal from A/C switch	On/Off	4W
AIP RLY	←	AIR pump relay control signal in PCM	On/Off	1G
ALTF	←	Generator field coil control signal in PCM	%	2AI
ALTT V	←	Input voltage from generator	V	2AJ
APP	←	APP	%	1AO, 1AP
APP1	←	APP from APP sensor No.1	%	1AO
		Input voltage from APP sensor No.1	V	
APP2	←	APP from APP sensor No.2	%	1AP
		Input voltage from APP sensor No.2	V	
APV	←	APV motor control signal in PCM	Open/Closed	2D, 2F
APV_2	N/A	APV motor 2 control signal in PCM	Open/Closed	
APV_POS	←	Input voltage from APV position sensor No.1	V	2AN
APV_POS_2	N/A	Input voltage from APV position sensor No.2	V	2AF
ARPMDES	←	Target engine speed	RPM	–
N/A	B+	Input voltage from battery	V	5I
BARO	←	BARO	kPa / Bar / psi	–
		Input voltage from BARO sensor	V	
BOO	←	Input signal from brake switch No.2	On/Off	–
CATT11_DSD	←	Estimated catalyst converter temperature	°C / °F	–
CHRGLP	←	Generator warning light control signal in PCM	On/Off	–
COLP	←	Input signal from refrigerant pressure switch (medium-pressure)	On/Off	1J
CPP*2	←	Input signal from CPP switch	On/Off	1D
CPP/PNP*2	←	Input signal from neutral switch	Drive/Neutral	2AS
DEI*3	←	VDI solenoid valve control signal in PCM	On/Off	2L
DTCCNT	←	DTC count (includes those needing no action)	–	–
ECT	←	ECT	°C / °F	2AH
		Input voltage from ECT sensor	V	
EQ_RAT11	←	Lambda	–	–
EQ_RAT11_DSD	N/A	Desired equivalence ratio (lambda)	–	–
ETC_ACT	←	Throttle valve opening angle	°	2A, 2B
ETC_DSD	←	Target throttle valve position	%	–
		Target throttle valve opening angle	°	
EVAPCP	←	Purge solenoid valve control signal in PCM	%	2C
FAN1	←	Cooling fan relay No.1/No.2 control signal in PCM	On/Off	1M
FAN2	←	Cooling fan relay No.3/No.4 control signal in PCM	On/Off	1N
FAN3	N/A	Cooling fan relay No.4/No.5 control signal in PCM	On/Off	1R
N/A	FDPDTC	Pending code that caused Freeze Frame Data storage	–	–
FLI	←	Fuel tank level	%	–
FP	←	Fuel pump relay control signal in PCM	On/Off	1H
FPRR	←	Fuel pump speed control relay control signal in PCM	On/Off	1K

Item		Definition	Unit/Condition		PCM terminal
2009MY	2008MY				
FUELPW	←	Fuel injection duration in PCM	ms		2AZ, 2BB, 2BC, 2BD
FUELSYS	←	Fuel system loop status	OL/CL/OL–Drive/ OL–Fault/CL–Fault		–
GENVDSD	←	Target generator voltage	V		–
HTR11	←	A/F sensor heater control signal in PCM	On/Off		2BG
HTR12	←	HO2S heater control signal in PCM	On/Off		2BE
IAC	←	Throttle actuator control signal in PCM	%		2A,2B
IASV*4	←	VFAD solenoid valve control signal in PCM	On/Off		1AE
IAT	←	IAT	°C	°F	1AT
		Input voltage from IAT sensor	V		
INGEAR	←	In gear	On/Off		–
IVS	←	Idle validation	Idle/Off Idle		–
KNOCKR	←	Spark retard value to prevent knocking	°		2U, 2V, 2Y, 2AC
LDP_EVAPCP	N/A	Evap control system incorrect purge flow detection valve	A		1U, 1V
LDP_IDL	N/A	Evap system detection pump idle current	A		1U, 1V
LDP_MON	N/A	Evap system detection pump monitoring current	A		1U, 1V
LDP_REF	N/A	Evap system detection pump reference current	A		1U, 1V
LDP_SLDV	N/A	Evap control system small leak detection valve	A		1U, 1V
LDP_VSLDV*1	N/A	Evap control system very small leak detection valve	mA/s		1U, 1V
LOAD	←	LOAD	%		–
LONGFT1	←	Long term fuel trim	%		–
MAF	←	MAF	g/sec		1AK
		Input voltage from MAF sensor	V		
MIL	←	MIL control signal in PCM	On/Off		–
MIL_DIS	←	Distance travelled while MIL is activated	km	mile	–
MOP_DRV_C	N/A	Electromagnetic metering oil pump center driving signal	On/Off		1E
MOP_DRV_S	N/A	Electromagnetic metering oil pump side driving signal	On/Off		1F
MOP_FL_C	N/A	Electromagnetic metering oil pump center request flow volume	cc/h		1S
MOP_FL_S	N/A	Electromagnetic metering oil pump side request flow volume	cc/h		1AA
MOP_P_ACT	N/A	Electromagnetic metering oil pump system pressure actual	Pa		2R
MOP_P_DSD	N/A	Electromagnetic metering oil pump system pressure desired	Pa		–
N/A	MOP_POS	Metering oil pump control status	–		2V, 2W, 2Y, 2AB
N/A	MOP_SW	Input signal from metering oil pump switch	On/Off		2N
OCV_ACT	N/A	OCV current actual	A		2E
OCV_CLEAN	N/A	OCV cleaning mode	On/Off		–
OCV_DSD	N/A	OCV current desired	A		–
O2S11	←	A/F sensor output current	A		2AD
O2S12	←	Input voltage from HO2S	V		2Q
PACNTV	←	AIR solenoid valve control signal in PCM	On/Off		2G
PCM_T	←	Input voltage from PCM temperature sensor	V		–
N/A	PREDELI	Delivery mode	On/Off		–
RO2FT1	←	Target A/F feedback system status	–		–
RPM	←	Engine speed	RPM		2AG
SC_SET	←	Cruise indicator light control signal in PCM	On/Off		–
SCCS	←	Input voltage from cruise control switch	V		1AQ

Item		Definition	Unit/Condition		PCM terminal
2009MY	2008MY				
N/A	SELTESTDTC	DTC count by KOEO/KOER self-test	–		–
SHRTFT1	←	Short term fuel trim	%		–
SHRTFT12	←	Target A/F fuel trim	%		–
SPARK-L	←	Spark advance (L/F) in PCM	°		–
SPARK-T	←	Spark advance (T/F) in PCM	°		–
SSV	←	SSV solenoid valve control signal in PCM	On/Off		2I
Test	←	Test mode	On/Off		–
TH_M	N/A	Thermostat monitor engine coolant temperature	°C	°F	–
TH_M_MIN	N/A	Thermostat monitor engine coolant temperature min limit	°C	°F	–
TH_M_MAX	N/A	Thermostat monitor engine coolant temperature max limit	°C	°F	–
TIRESIZE	←	Tire revolution per mile	–		–
TP	←	Input voltage from TP sensor	V		–
TP REL	←	Relative TP	%		2AK, 2AL
TP1	←	TP from TP sensor No.1	%		2AK
		Input voltage from TP sensor No.1	V		
TP2	←	TP from TP sensor No.2	%		2AL
		Input voltage from TP sensor No.2	V		
TPCT	←	Minimum input voltage from TP sensor at throttle closing	V		–
VPWR	N/A	Module supply voltage	V		1BA
VSS	←	Vehicle speed	KPH	MPH	–

*1 : California emission regulation applicable model
*2 : MT
*3 : 13B-MSP (high power)
*4 : With VFAD

SIMULATION TEST [13B-MSP]

id0102g1100600

- The simulation items are shown below.

Caution
- **To prevent engine damage, use MOP_FL_C and MOP_FL_S only during idling (after engine warm-up) up to 30 s.**

Simulation item table

N/A: Not applicable

Item		Applicable component	Unit/ Condition	Test condition		PCM terminal
2009MY	2008MY			KOEO	KOER	
ACCS	←	A/C relay	On/Off	×	×	1I
AIP RLY	←	AIR pump relay	On/Off	×	×	1G
ALTF	←	Generator (field coil)	On/Off	–	×	2AI
APV	←	APV motor	Open/ Closed	×	×	2D, 2F
ARPMDES	←	Target engine speed	RPM	×	×	–
DEI*1	←	VDI solenoid valve	On/Off	×	×	2L
ETC_DSD	←	Target throttle valve opening angle	°	×	×	–
EVAPCP	←	Purge solenoid valve	%	×	×	2C
FAN1	←	Cooling fan relay No.1	On/Off	×	×	1M
FAN2	←	Cooling fan relay No.2/No.3	On/Off	×	×	1N
FAN3	N/A	Cooling fan relay No.4/No.5	On/Off	×	×	1R
FP	←	Fuel pump relay	On/Off	×	×	1H
FPRR	←	Fuel pump speed control relay	On/Off	×	×	1K
FUELPW1	←	Fuel injector (FP, RP)	%	–	×	2BB, 2BD

Item		Applicable component	Unit/ Condition	Test condition		PCM terminal
2009MY	2008MY			KOEO	KOER	
GENVDSD	←	Target generator voltage	V	–	×	–
HTR12	←	HO2S heater	On/Off	×	×	2BE
IASV*2	←	VFAD solenoid valve	On/Off	×	×	1AE
MOP_FL_C	N/A	Electromagnetic metering oil pump center request flow volume	cc/h	×	×	1S
MOP_FL_S	N/A	Electromagnetic metering oil pump side request flow volume	cc/h	×	×	1AA
N/A	MOP_POS	Metering oil pump	–	×	×	2V, 2W, 2Y, 2AB
OCV_CLOSE	N/A	OCV close mode	On	×	×	2E
PACNTV	←	AIR solenoid valve	On/Off	×	×	2G
N/A	PREDELI	Delivery mode	On/Off	×	×	–
SSV	←	SSV solenoid valve	On/Off	×	×	2I
test	←	Test mode	On/Off	×	×	–

*1 : 13B-MSP (high power)
*2 : With VFAD

01-10 MECHANICAL [13B-MSP]

MECHANICAL OUTLINE [13B-MSP] 01-10–1
ENGINE STRUCTURAL VIEW [13B-MSP] 01-10–1
ENGINE FRONT COVER CONSTRUCTION [13B-MSP] 01-10–2

MECHANICAL OUTLINE [13B-MSP]

id011070100100

- The standard power stationary gear has been changed to a high power specification.
- An auxiliary port has been added to the standard power version. The construction is the same as that of the high power vehicle.
- The construction of the front cover has been changed and the oil control valve (OCV) and oil filter are now assembled to it.

ENGINE STRUCTURAL VIEW [13B-MSP]

id011070119200

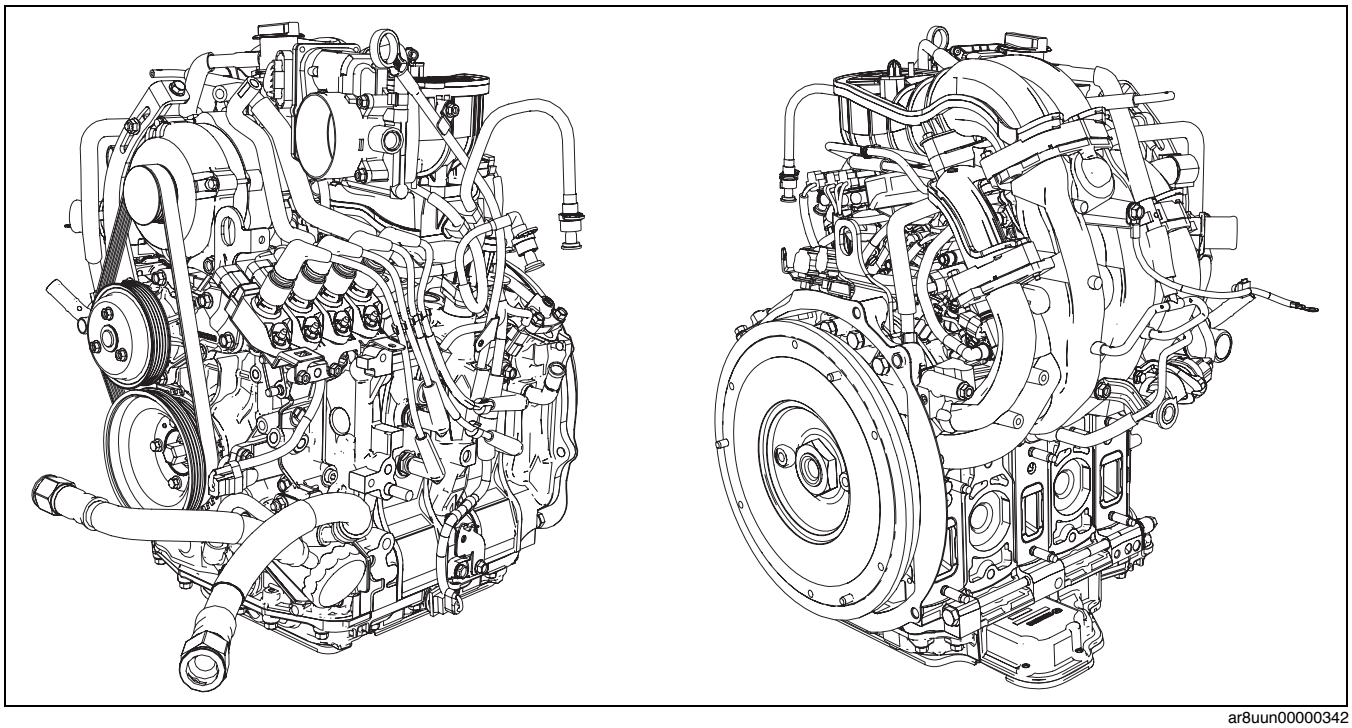

ar8uun00000342

ENGINE FRONT COVER CONSTRUCTION [13B-MSP]

id011070119100

- An aluminum engine front cover has been adopted for weight reduction.
- There are installation holes for the oil control valve (OCV), OCV oil filter, and oil filter on the engine front cover.
- The oil filter is assembled to the engine front cover for improved serviceability.

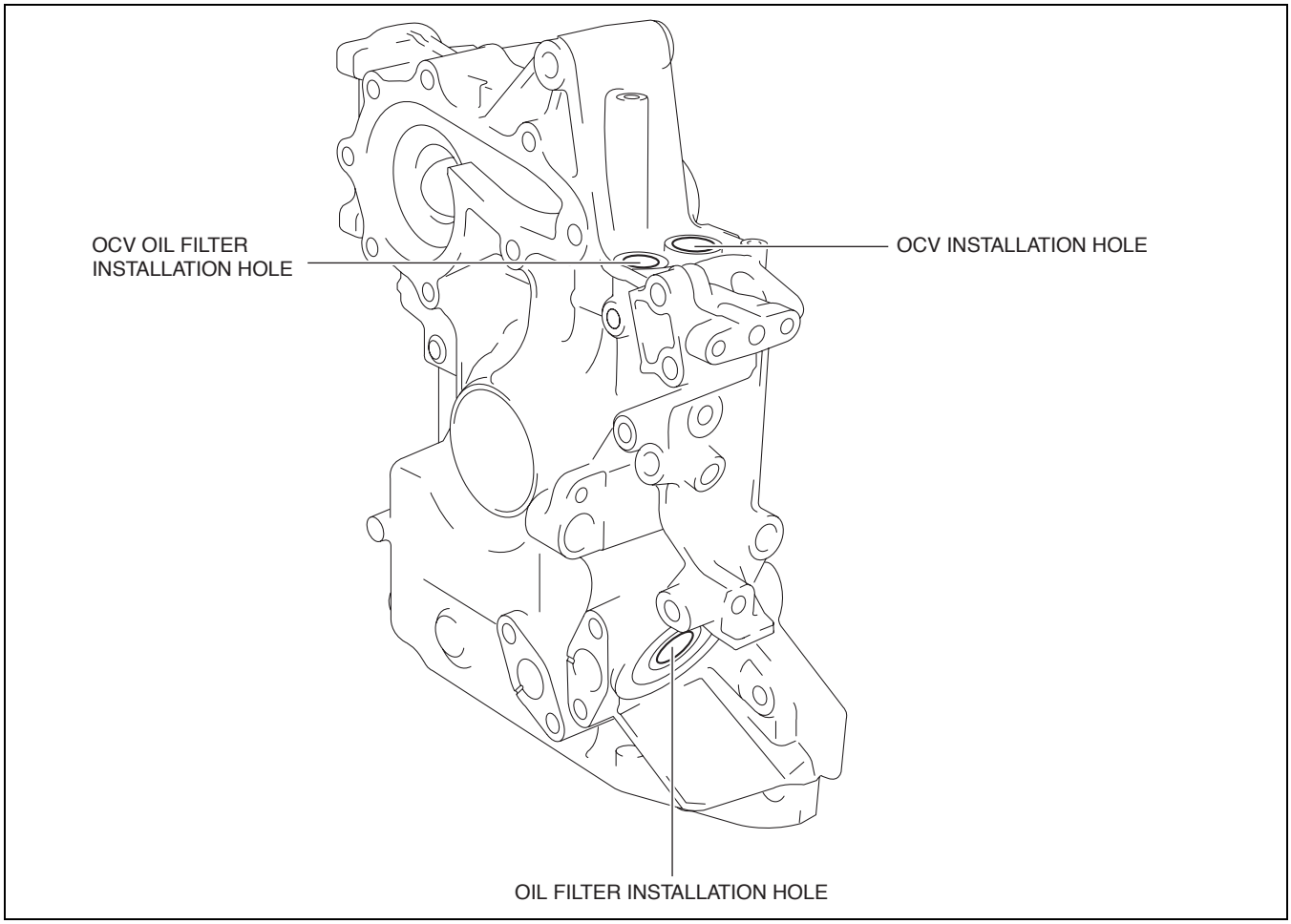

ar8uun00000173

01-11 LUBRICATION [13B-MSP]

LUBRICATION SYSTEM OUTLINE [13B-MSP] 01-11–1
Features 01-11–1
LUBRICATION SYSTEM STRUCTURAL VIEW [13B-MSP] 01-11–2
LUBRICATION SYSTEM FLOW DIAGRAM [13B-MSP] 01-11–3
OIL FILTER CONSTRUCTION [13B-MSP] 01-11–3
OIL PAN CONSTRUCTION [13B-MSP] 01-11–4
OIL PUMP CONSTRUCTION [13B-MSP] 01-11–4
METERING OIL PUMP CONSTRUCTION/OPERATION [13B-MSP] 01-11–5
Construction 01-11–5
Operation 01-11–8
OIL CONTROL VALVE (OCV) CONSTRUCTION/OPERATION [13B-MSP] 01-11–9
Construction 01-11–9
Operation 01-11–10

LUBRICATION SYSTEM OUTLINE [13B-MSP]

id0111e4100100

Features

Improved lubricity	• An electric type metering oil pump system adopted • Center oil nozzles adopted which discharge oil to the center area of the rotor housings • Oil pump changed • Oil pan upper block adopted
Improved serviceability	• Oil filter position changed

LUBRICATION SYSTEM STRUCTURAL VIEW [13B-MSP]

id0111e4100200

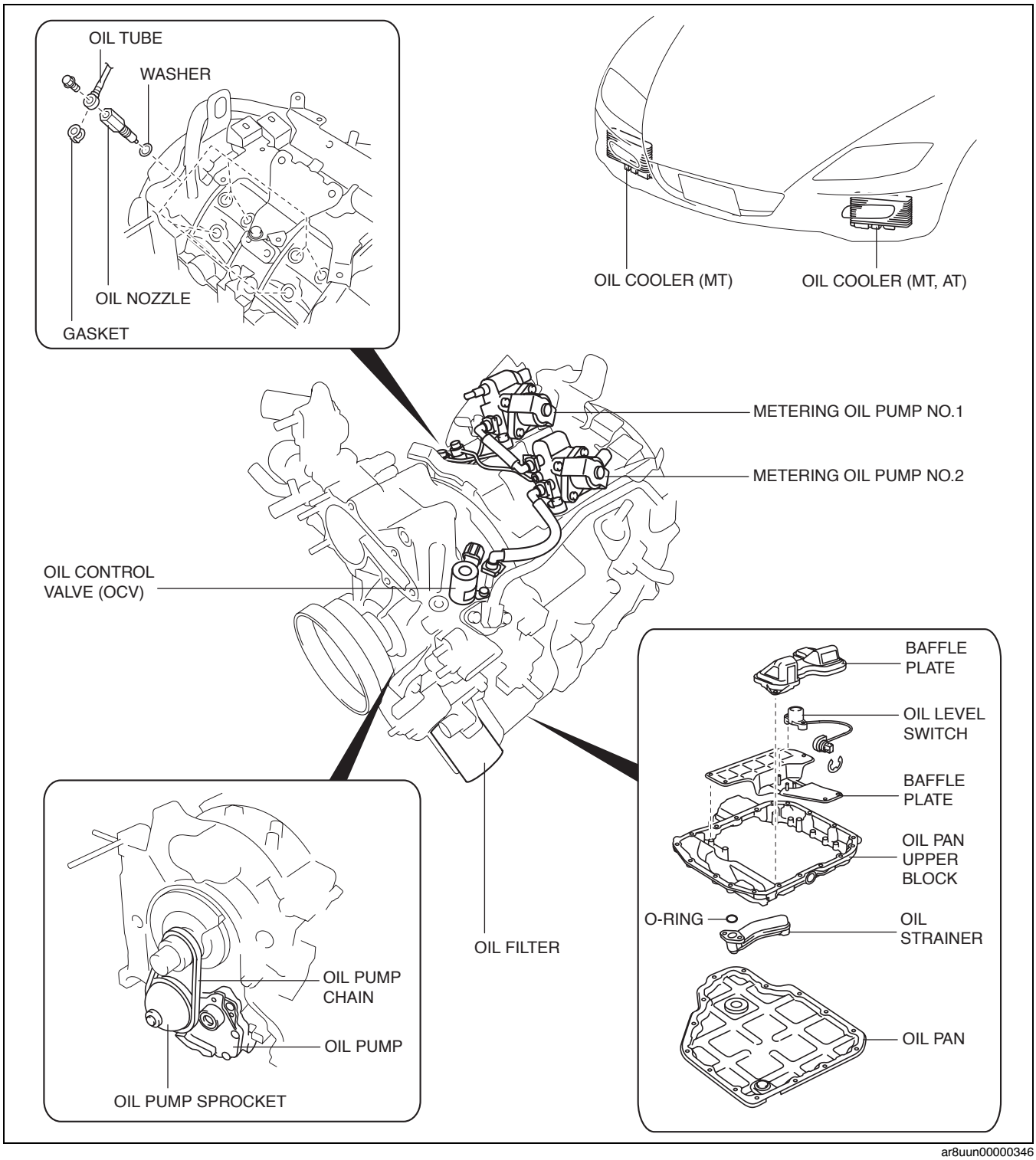

ar8uun00000346

LUBRICATION SYSTEM FLOW DIAGRAM [13B-MSP]

id0111e4100300

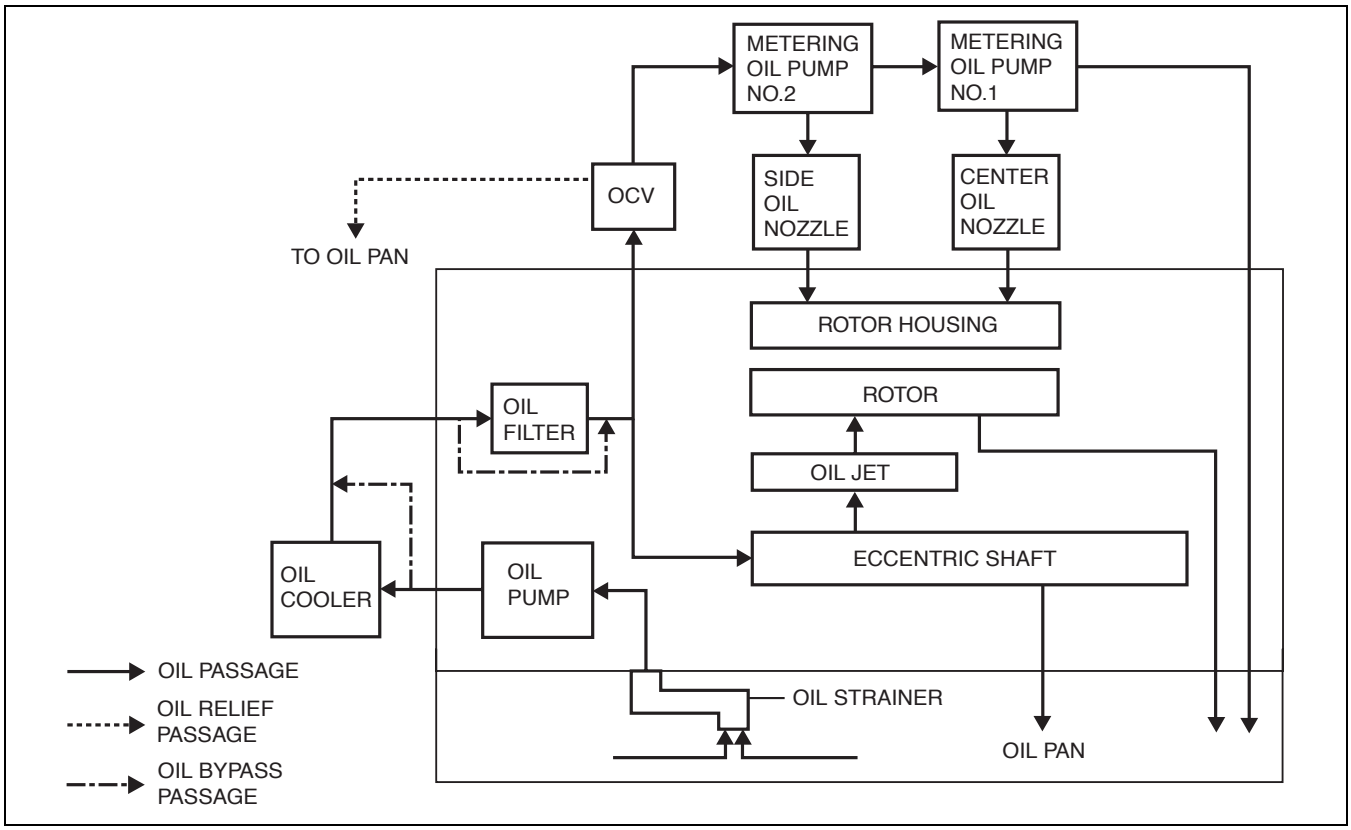

ar8uun00000347

OIL FILTER CONSTRUCTION [13B-MSP]

id0111e4100800

- The oil filter is positioned at the lower area of the front cover left surface (Lower left side of the vehicle).
- The oil filter is a full-flow paper element type with an outer diameter of 68 mm {2.68 in} and height of 85 mm {3.35 in}.

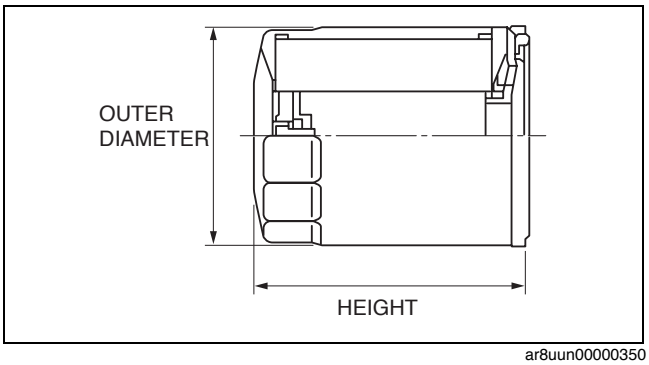

ar8uun00000350

OIL PAN CONSTRUCTION [13B-MSP]

id0111e4100400

- The oil pan consists of a thinner, steel type oil pan and an aluminum oil pan upper block. With the shape of the oil pan upper block projecting towards the vehicle right side, oil capacity has been increased, stabilizing the oil pressure during cornering even at lower oil levels.
- The oil baffle plates have been adopted inside the oil pan upper block to stabilize engine oil slosh or aeration when the vehicle rolls and to prevent air suction in the oil strainer.
- An oil level switch, equipped inside the oil pan upper block, operates a warning if the oil level is lowered to a certain level. (The warning buzzer sounds and the warning light in the instrument cluster flashes. Afterwards, the warning buzzer stops and the warning light switches from flashing to continuous illumination.)
- A silicon sealant with excellent sealing qualities has been adopted.

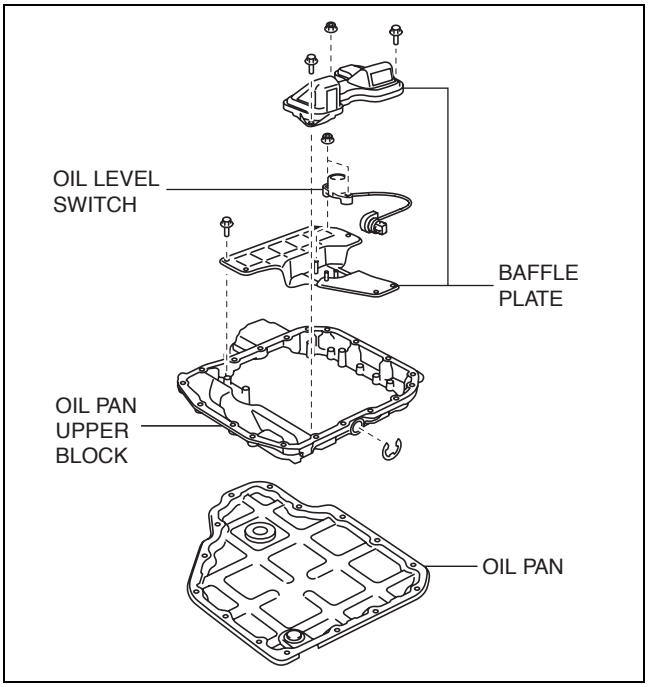

ar8uun00000348

OIL PUMP CONSTRUCTION [13B-MSP]

id0111e4100600

- The oil pump is installed inside the front cover. The eccentric shaft drives the inner rotors through the oil pump chain and oil pump sprocket.
- A trochoid type oil pump has been adopted.
- The oil pump consists of oil pump body, shaft, front outer rotor, front inner rotor, middle plate, rear inner rotor, rear outer rotor, and oil pump cover.
- A two-rotor type oil pump has been adopted to realize both discharging performance and downsizing. This also contributes to reducing the discharging pulsation which is unique to trochoid pumps.
- An aluminum alloy oil pump body and cover have been adopted to reduce weight.
- The relief valve, which returns engine oil to the intake side when the oil pressure is the specified value or more, is integrated with the oil pump cover.

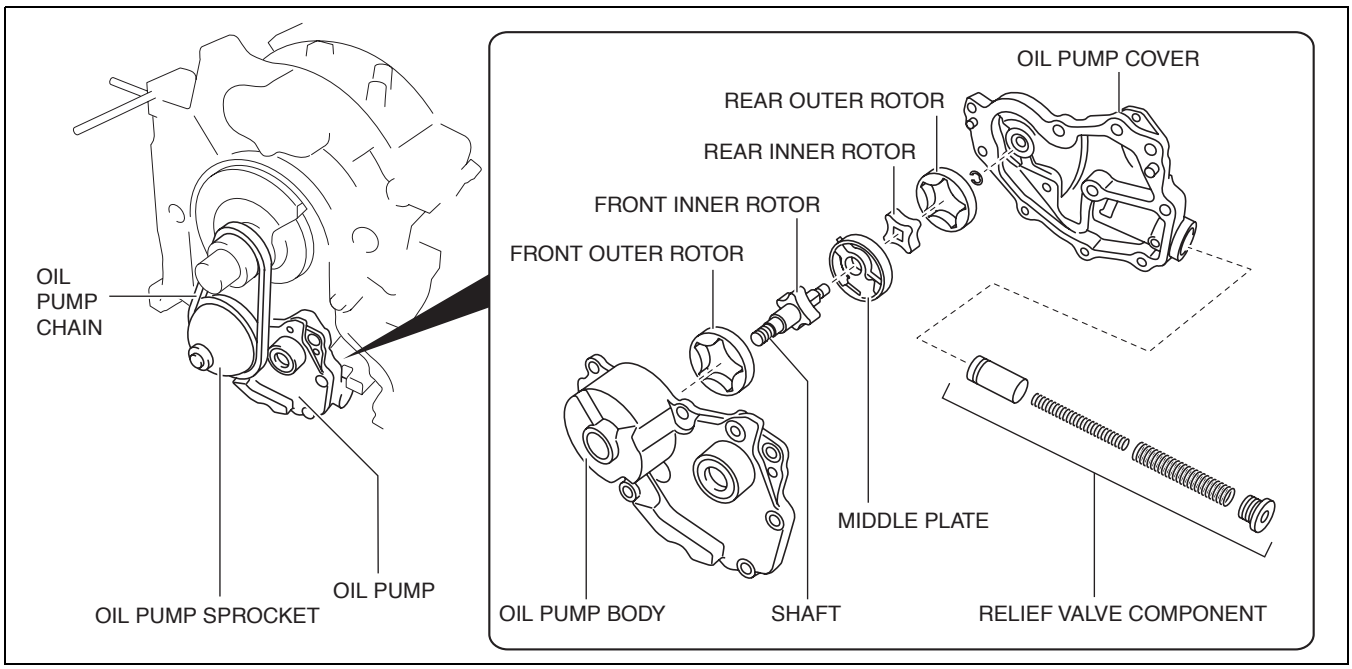

ar8uun00000349

Oil pump specification

Item	Engine speed [rpm]	Specification (kPa {kgf/cm^2, psi})
Oil discharge pressure (reference value) [Oil temperature: 100°C {212°F}]	1,500	280 {2.86, 40.6}
	3,000	500 {5.10, 72.5}
Relief valve opening pressure (reference value)		1,080 {11.01, 156.6}

METERING OIL PUMP CONSTRUCTION/OPERATION [13B-MSP]

id0111e4661100

Construction

- An electric metering oil pump system has been adopted to optimally control the oil injection amount for effective oil supply and lower oil consumption.
- The electric metering oil pump consists of the metering oil pumps No.1 and No.2, center oil nozzles, side oil nozzles, oil control valve (OCV), oil pressure sensor, metering oil pump driver, PCM, oil hoses, and oil tubes.

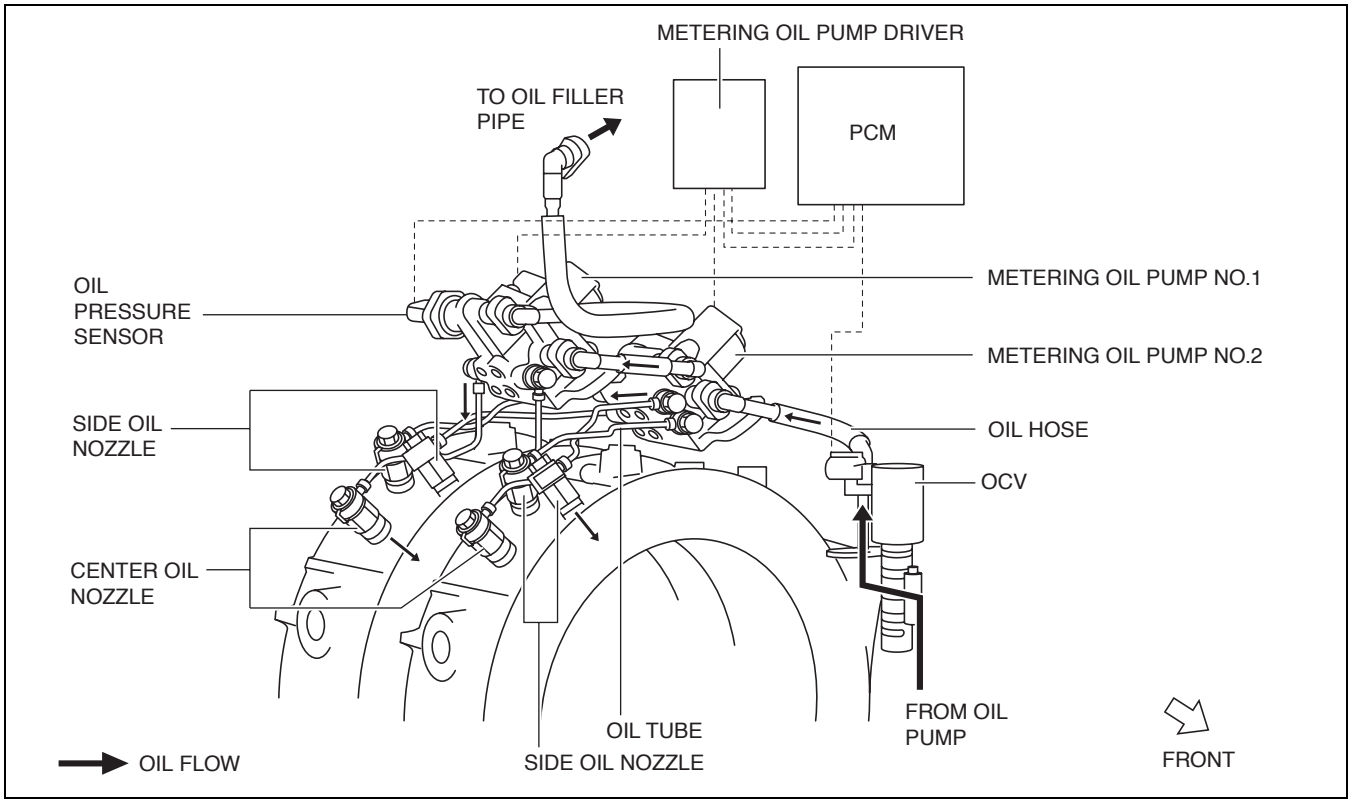

ar8uun00000351

Component parts and function

Part name	Function
Metering oil pump No.1	Supplies oil to the center oil nozzles
Metering oil pump No.2	Supplies oil to the side oil nozzles
Center oil nozzle	Discharges oil to the center area of the rotor housing
Side oil nozzle	Discharges oil to the side surface of the side housing
OCV	Based on the signals from the PCM, adjusts the amount of oil supplied to the metering oil pump so that the oil pressure in the metering oil pump is kept constant. (See 01-11-9 OIL CONTROL VALVE (OCV) CONSTRUCTION/OPERATION [13B-MSP].)
Oil pressure sensor	Detects oil pressure in the metering oil pump and inputs to the PCM (See 01-40-29 OIL PRESSURE SENSOR CONSTRUCTION/OPERATION [13B-MSP].)
Metering oil pump driver	Supplies battery voltage to the metering oil pump based on the signals from the PCM (See 01-40-29 METERING OIL PUMP DRIVER CONSTRUCTION/OPERATION [13B-MSP].)
PCM	Controls the metering oil pump driver and OCV to realize the optimum oil discharge amount according to engine operation conditions (See 01-40-20 METERING OIL PUMP CONTROL OUTLINE [13B-MSP].) (See 01-40-21 OIL PRESSURE CONTROL OUTLINE [13B-MSP].)

Metering oil pump

- The metering oil pump consists of the main and sub plungers, coil spring, check valve, and orifice.
- The metering oil pump No.1 supplies oil to the center oil nozzles, and the metering oil pump No.2 to the side oil nozzles.

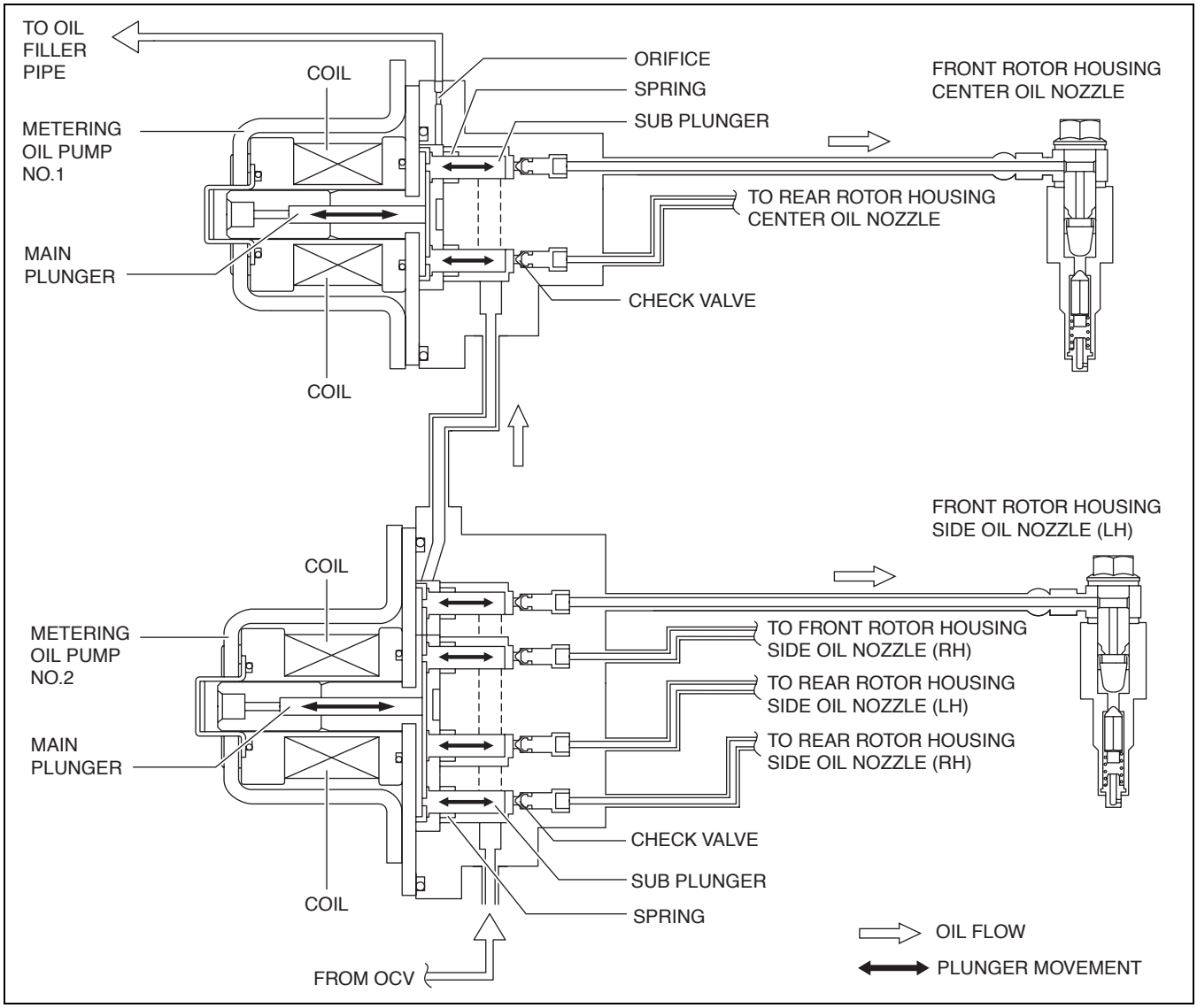

ar8uun00000352

Oil nozzle

- A total of three oil nozzles, one center oil nozzle and two side oil nozzles, are equipped per one rotor. The center oil nozzle discharges oil to the center area of the rotor housing, and the side oil nozzles to the side surface of the side housing. As a result, oil can be supplied to the entire rotor, enhancing the engine reliability.
- The oil nozzle consists of a check valve which opens and closes the oil passage inside the nozzle, spring, and built-in filter.

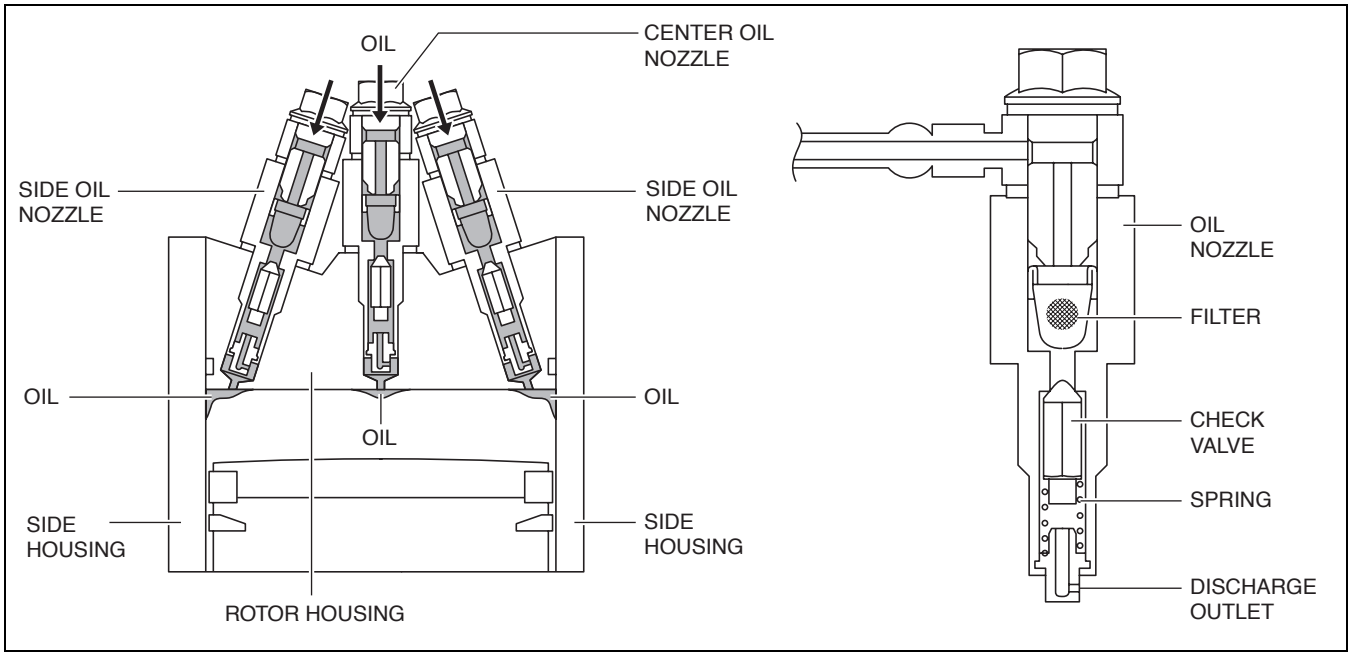

ar8uun00000353

Operation

- The PCM sends drive signals to the metering oil pump driver according to the engine operation conditions. The metering oil pump driver receives the drive signals from the PCM, and switches the inner ground to supply battery voltage to the metering oil pumps No.1 and No.2.
- When the battery voltage is supplied by the metering oil pump driver, the main and sub plungers in the metering oil pump move. The plungers return to the original position by spring force when the battery voltage is not supplied.
- When the battery voltage is not supplied, oil is suctioned to the space which is made by the plunger pulled by spring force. At this point (suction stage), oil is not supplied to the oil nozzle because the check valve is closed. When the battery voltage is supplied, the plunger moves (pops out) and pushes out the suctioned oil to the oil nozzle side. Because the oil is pushed into the oil tube, the oil pressure in the oil tube increases, then the check valve in the oil nozzle is open and the oil is discharged to the housing. (discharge stage)
  In this way, the plunger moves within a certain distance and oil is suctioned and discharged repeatedly.

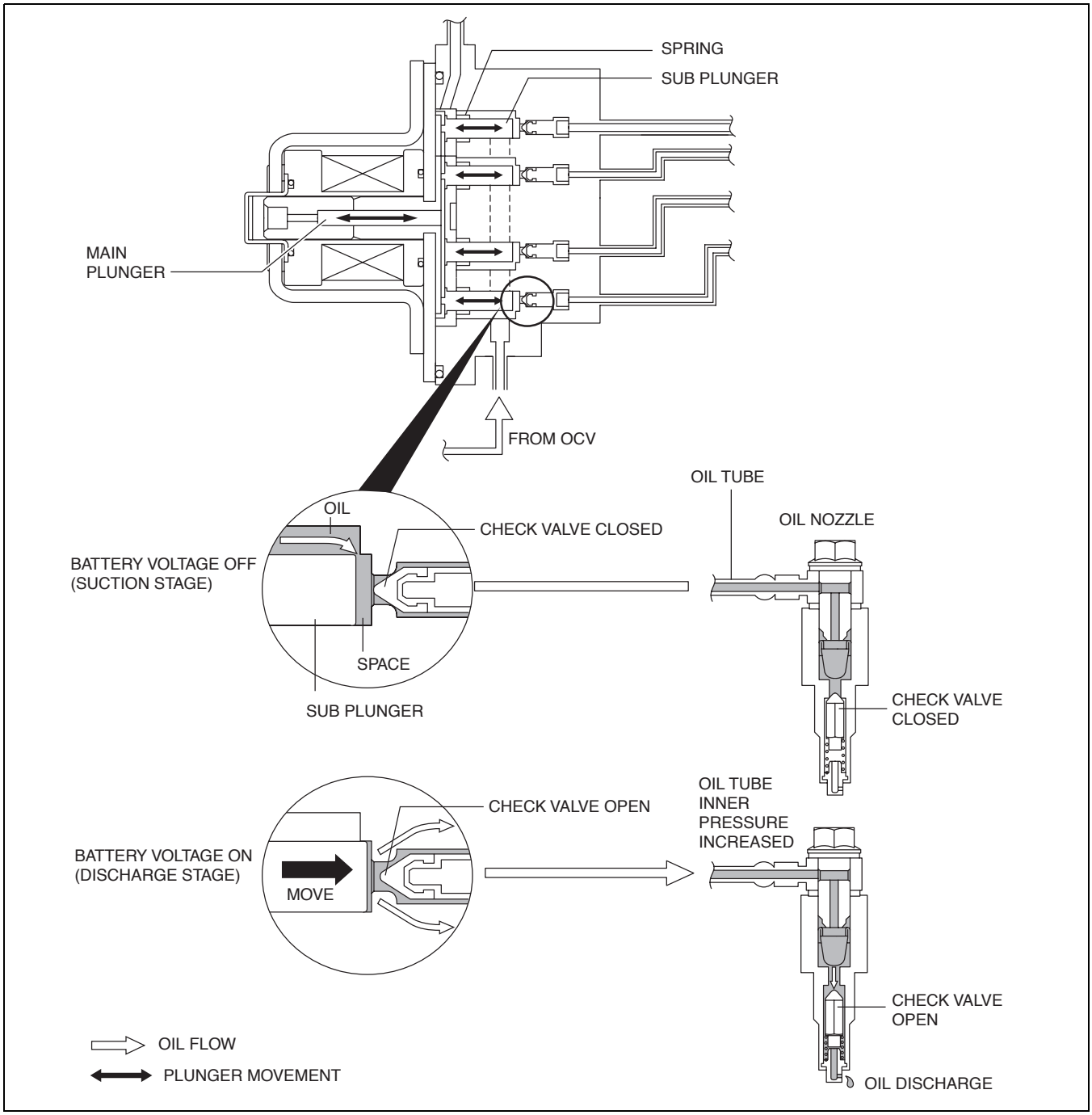

ar8uun00000354

- For ON/OFF control of the battery voltage, refer to CONTROL SYSTEM, METERING OIL PUMP CONTROL. (See 01-40-20 METERING OIL PUMP CONTROL OUTLINE [13B-MSP].)

OIL CONTROL VALVE (OCV) CONSTRUCTION/OPERATION [13B-MSP]

id0111e4019200

Construction

- The OCV is installed to the front cover (below the ignition coil bracket).

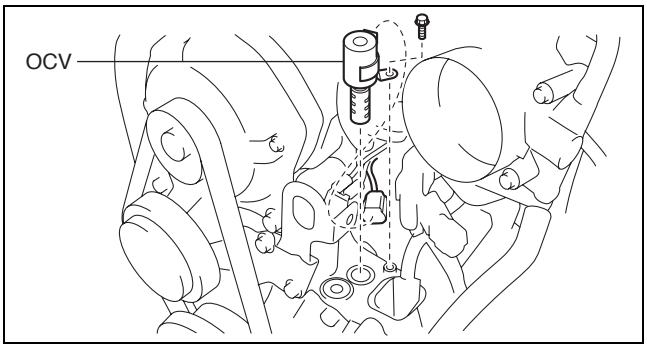

ar8uun00000343

- The OCV consists of a spool valve that switches the passages for engine oil, a coil that moves the spool valve, a plunger, and a return spring.

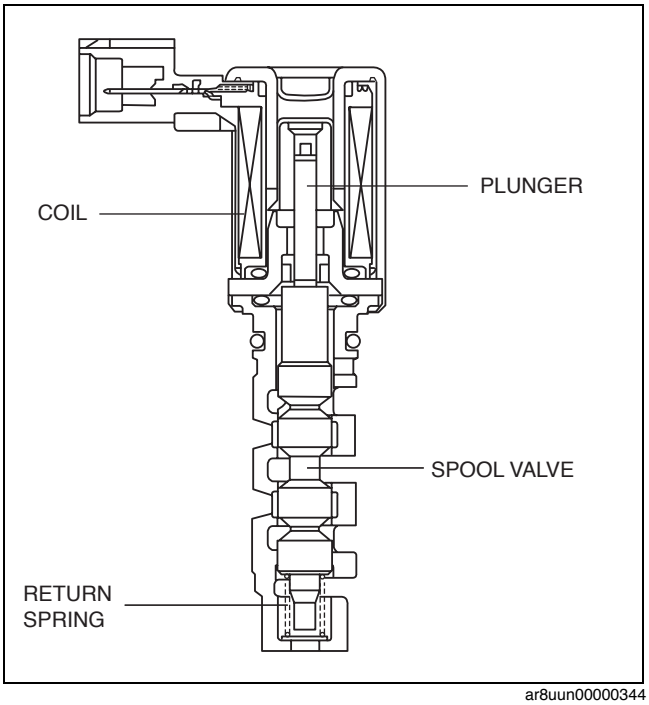

ar8uun00000344

Operation

- Based on the signals from the PCM, the spool valve inside the OCV moves up and down. With the up/down movement of the spool valve, the amount of oil supplied to the metering oil pump is controlled, and the oil pressure inside the metering oil pump is kept constant.

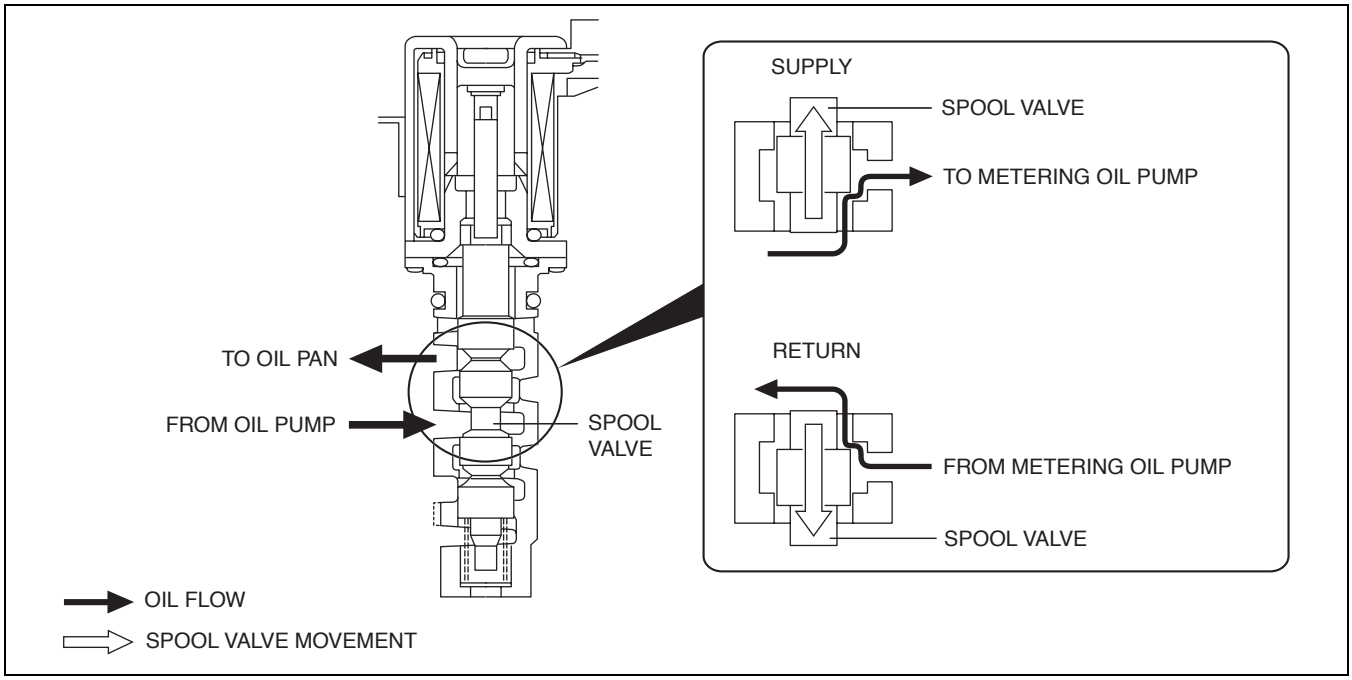

ar8uun00000345

- For OCV control, refer to CONTROL SYSTEM, OIL PRESSURE CONTROL. (See 01-40-21 OIL PRESSURE CONTROL OUTLINE [13B-MSP].)

01-12 COOLING SYSTEM [13B-MSP]

COOLING SYSTEM OUTLINE [13B-MSP] 01-12–1
Features 01-12–1
RADIATOR CONSTRUCTION [13B-MSP] 01-12–1
WATER PUMP CONSTRUCTION/OPERATION [13B-MSP] 01-12–2
Construction 01-12–2
Operation 01-12–2
COOLING FAN COMPONENT CONSTRUCTION/OPERATION [13B-MSP] 01-12–2
Construction 01-12–2
Operation 01-12–3

COOLING SYSTEM OUTLINE [13B-MSP]

id0112f2100100

Features

Improved cooling performance	• Radiator changed • Water pump changed • Cooling fan component changed

RADIATOR CONSTRUCTION [13B-MSP]

id0112f2142000

- A corrugated fin type radiator has been adopted.
- The radiator tanks are made of plastic and the core is made of aluminum for weight reduction.
- The down-flow direction of water inside the radiator causes air to bleed from the cooling system easier.
- The radiator has an ATF oil cooler in the lower radiator tank. (AT models)
- Four rubber-insulated mounting brackets are utilized to decrease vibration.
- To improve both the cooling ability and the sporty design, the radiator is designed to tilt forward to reduce the height and to take in the air from the inlet installed under the bumper.

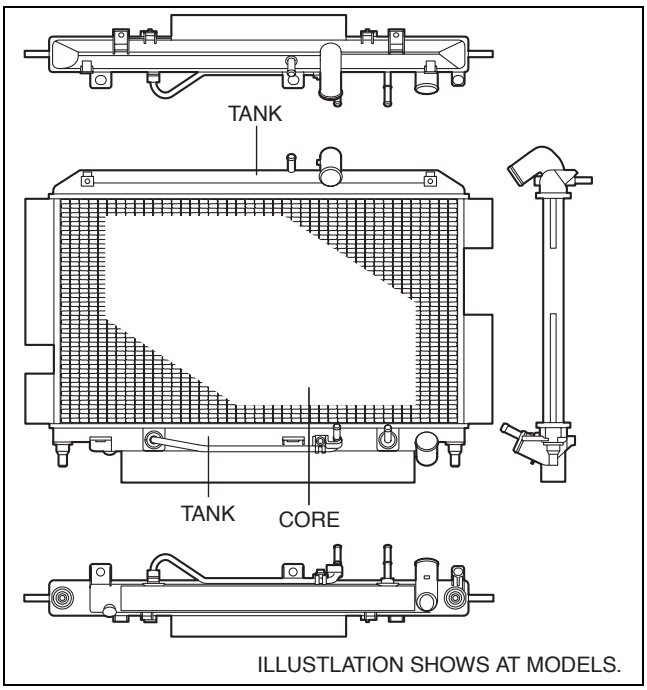

ar8uun00000357

WATER PUMP CONSTRUCTION/OPERATION [13B-MSP]

id0112f2100400

Construction

- The water pump consists of a steel water pump pulley, a water pump body made of aluminum alloy, and a O-ring.
- The water pump with the impeller built into the front cover has been adopted for size reduction. A plastic impeller has been adopted for reduced water pump drag.

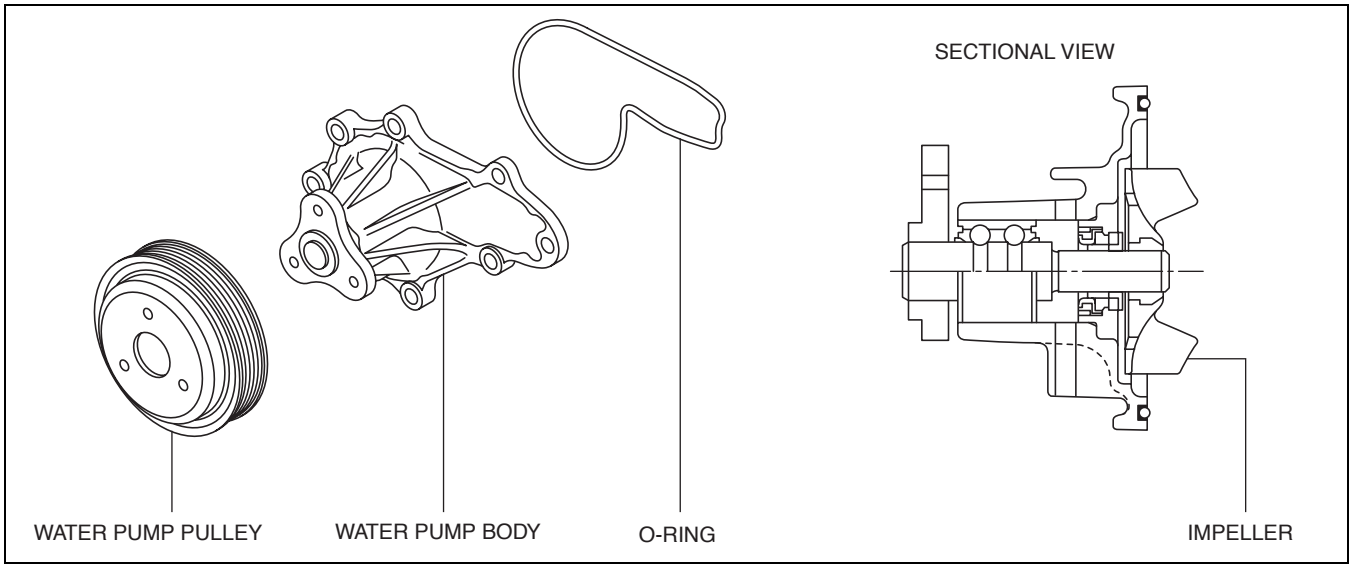

ar8uun00000355

Operation

- The water pump is driven by the drive belt.

COOLING FAN COMPONENT CONSTRUCTION/OPERATION [13B-MSP]

id0112f2141900

Construction

- The cooling fan component consists of the radiator cowling, cooling fans, and cooling fan motors.
- Electric cooling fans No.1 and No.2, which operate according to the fan control signal from the PCM, have been adopted. Due to this, engine noise has been reduced and rapid engine warming-up is possible.
- The radiator cowling and cooling fans are made of plastic for weight reduction.

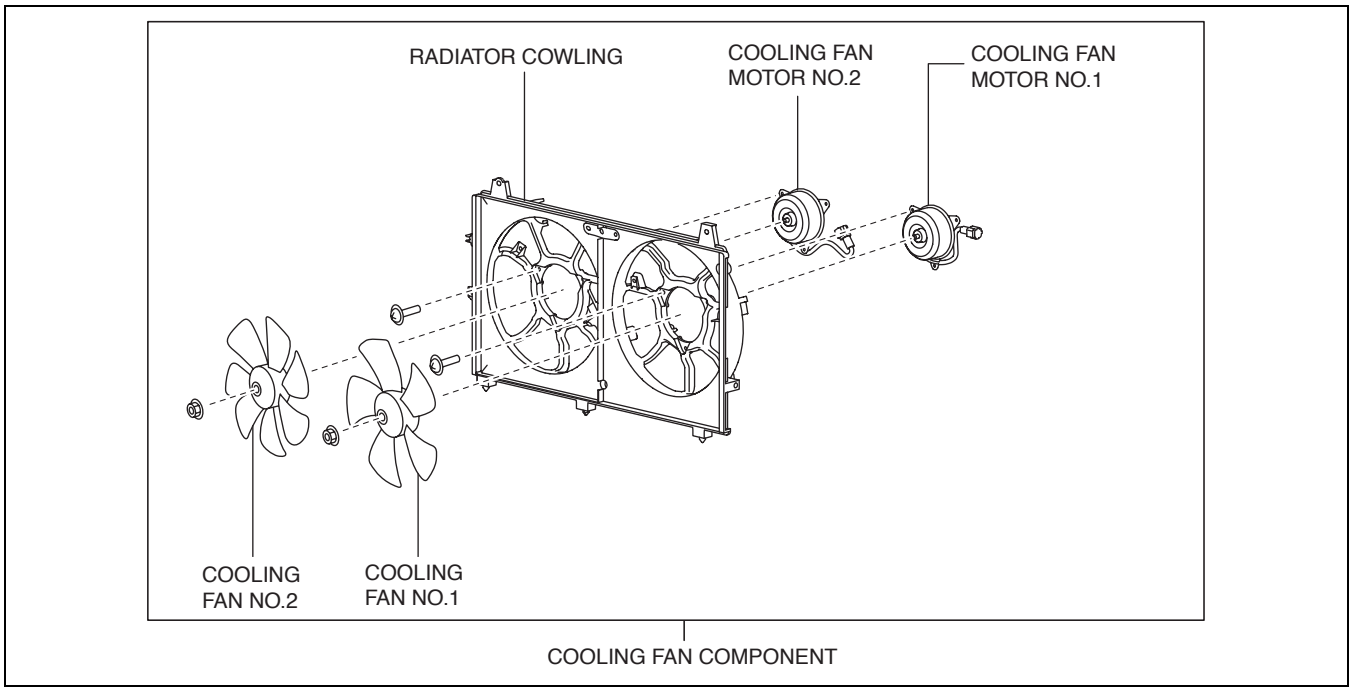

ar8uun00000356

Cooling fan, cooling fan motor specification

Item			Specification	
			No.1	No.2
Cooling fan	Number of blades		5	7
	Outer diameter	(mm {in})	300 {11.8}	
Cooling fan motor output		(W)	120	

Operation

- Cooling fans No.1 and No.2 operate according to the engine coolant temperature and whether the A/C is on or off. Three-stage control has been adopted to the cooling fan with high, middle, and low speed rotation allowing noise reduction and power savings. (See 01-40-23 ELECTRICAL FAN CONTROL OUTLINE [13B-MSP].)

01-13 INTAKE-AIR SYSTEM [13B-MSP]

INTAKE-AIR SYSTEM STRUCTURAL VIEW [13B-MSP] 01-13–2
INTAKE-AIR SYSTEM DIAGRAM [13B-MSP] 01-13–3
INTAKE-AIR SYSTEM VACUUM HOSE ROUTING DIAGRAM [13B-MSP] 01-13–4
FRESH-AIR DUCT FUNCTION [13B-MSP] 01-13–5
FRESH-AIR DUCT CONSTRUCTION [13B-MSP] 01-13–5
INTAKE MANIFOLD CONSTRUCTION [13B-MSP] 01-13–5
SEQUENTIAL DYNAMIC AIR INTAKE SYSTEM (S-DAIS) STRUCTURE [13B-MSP] 01-13–6
SEQUENTIAL DYNAMIC AIR INTAKE SYSTEM (S-DAIS) OPERATION [13B-MSP] 01-13–7
Operation Outline 01-13–7
Operation 01-13–7
SECONDARY SHUTTER VALVE (SSV) SOLENOID VALVE CONSTRUCTION/OPERATION [13B-MSP] 01-13–9
VARIABLE FRESH AIR DUCT (VFAD) SOLENOID VALVE FUNCTION [13B-MSP] 01-13–10
VARIABLE FRESH AIR DUCT (VFAD) SOLENOID VALVE CONSTRUCTION/OPERATION [13B-MSP] 01-13–10
VARIABLE FRESH AIR DUCT (VFAD) ACTUATOR FUNCTION [13B-MSP] 01-13–10
VARIABLE FRESH AIR DUCT (VFAD) ACTUATOR CONSTRUCTION/OPERATION [13B-MSP] 01-13–10
AUXILIARY PORT VALVE (APV) MOTOR FUNCTION [13B-MSP] 01-13–10
AUXILIARY PORT VALVE (APV) MOTOR CONSTRUCTION/OPERATION [13B-MSP] 01-13–10

INTAKE-AIR SYSTEM STRUCTURAL VIEW [13B-MSP]

id0113z3100200

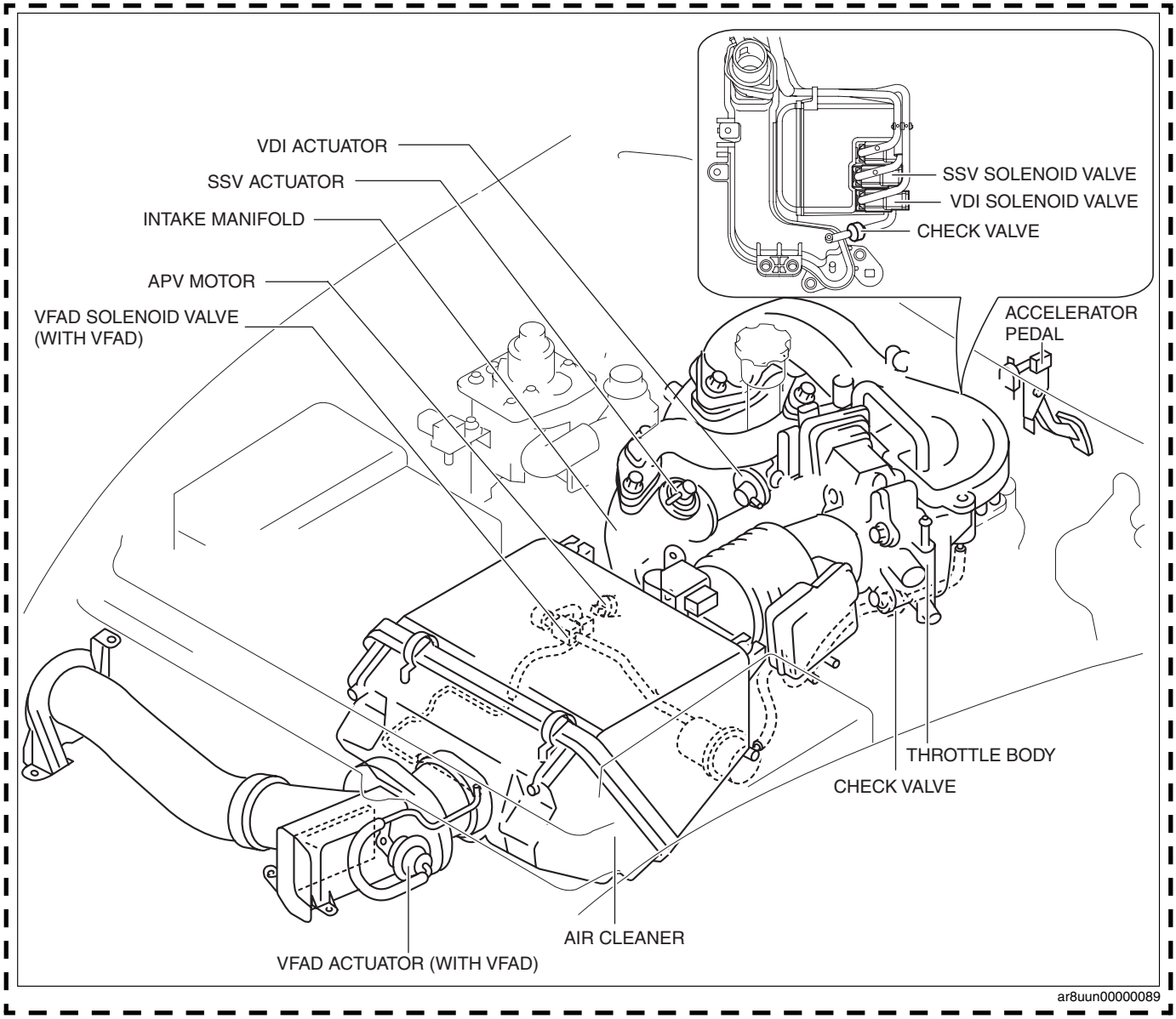

ar8uun00000089

INTAKE-AIR SYSTEM DIAGRAM [13B-MSP]

id0113z3102200

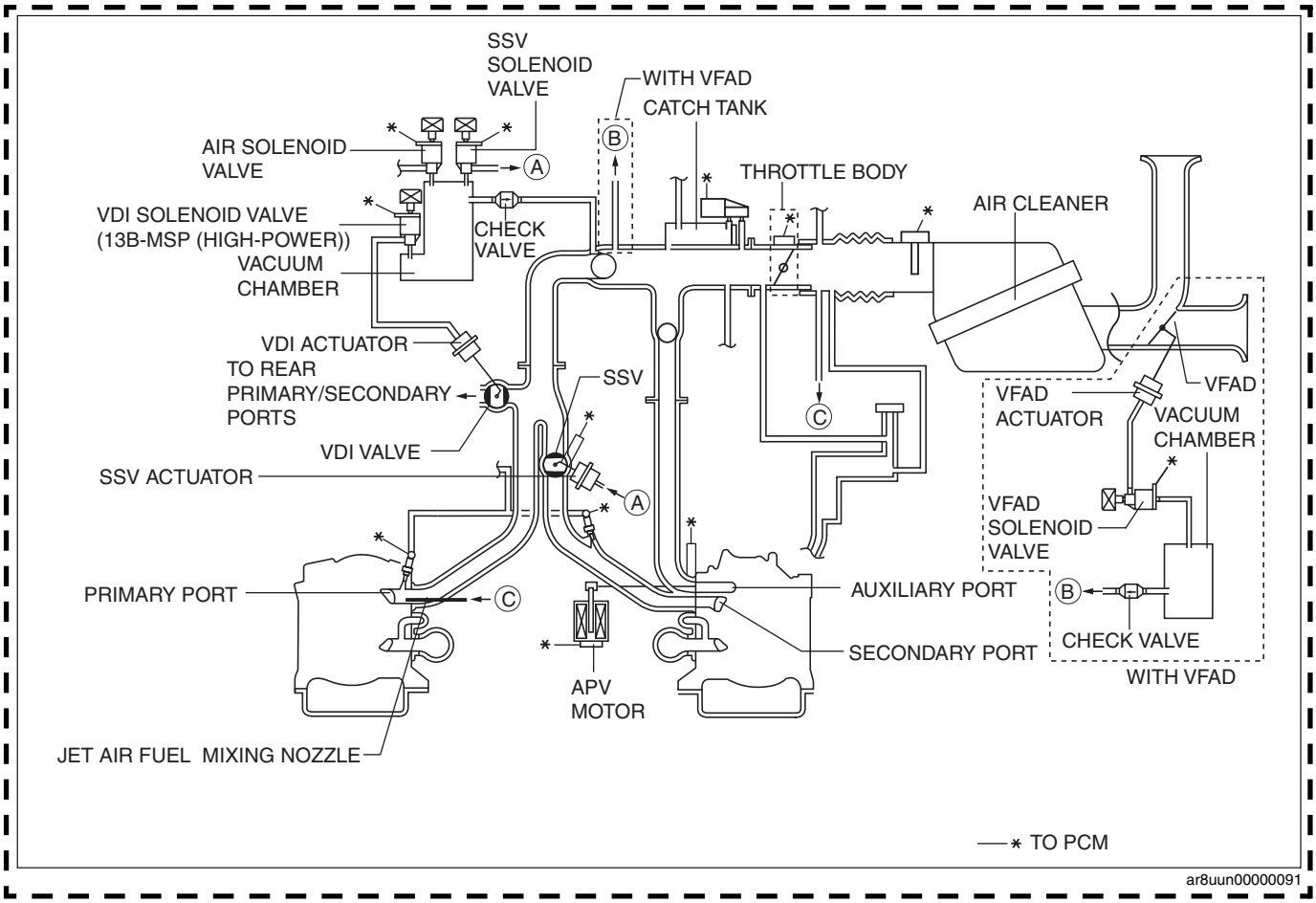

ar8uun00000091

INTAKE-AIR SYSTEM VACUUM HOSE ROUTING DIAGRAM [13B-MSP]

id0113z3100400

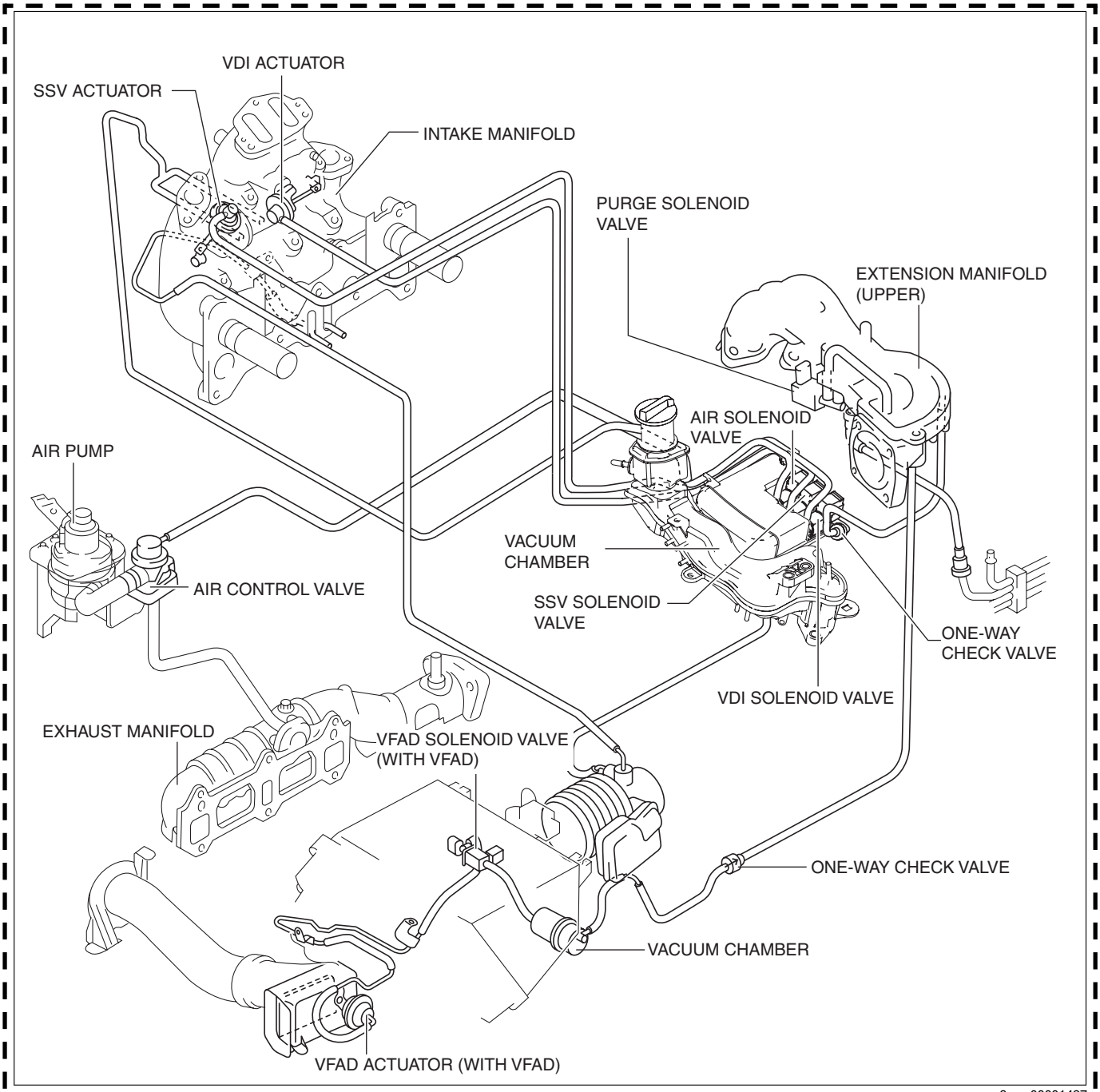

ar8uuw00001427

FRESH-AIR DUCT FUNCTION [13B-MSP]

id0113z3141600

- Channels air to the air cleaner.
- The VFAD valve has been adopted, improving torque and output at the medium-high speed range. (with VFAD)

FRESH-AIR DUCT CONSTRUCTION [13B-MSP]

id0113z3662100

- Composed of the fresh-air duct, VFAD actuator (with VFAD), and VFAD valve (with VFAD).

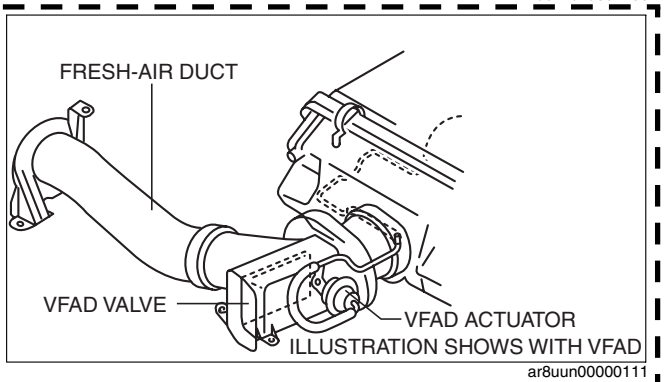

ar8uun00000111

INTAKE MANIFOLD CONSTRUCTION [13B-MSP]

id0113z3100800

Construction

- Composed of the SSV, VDI valve, APV, APV motor, jet air fuel mixing nozzles, and body.

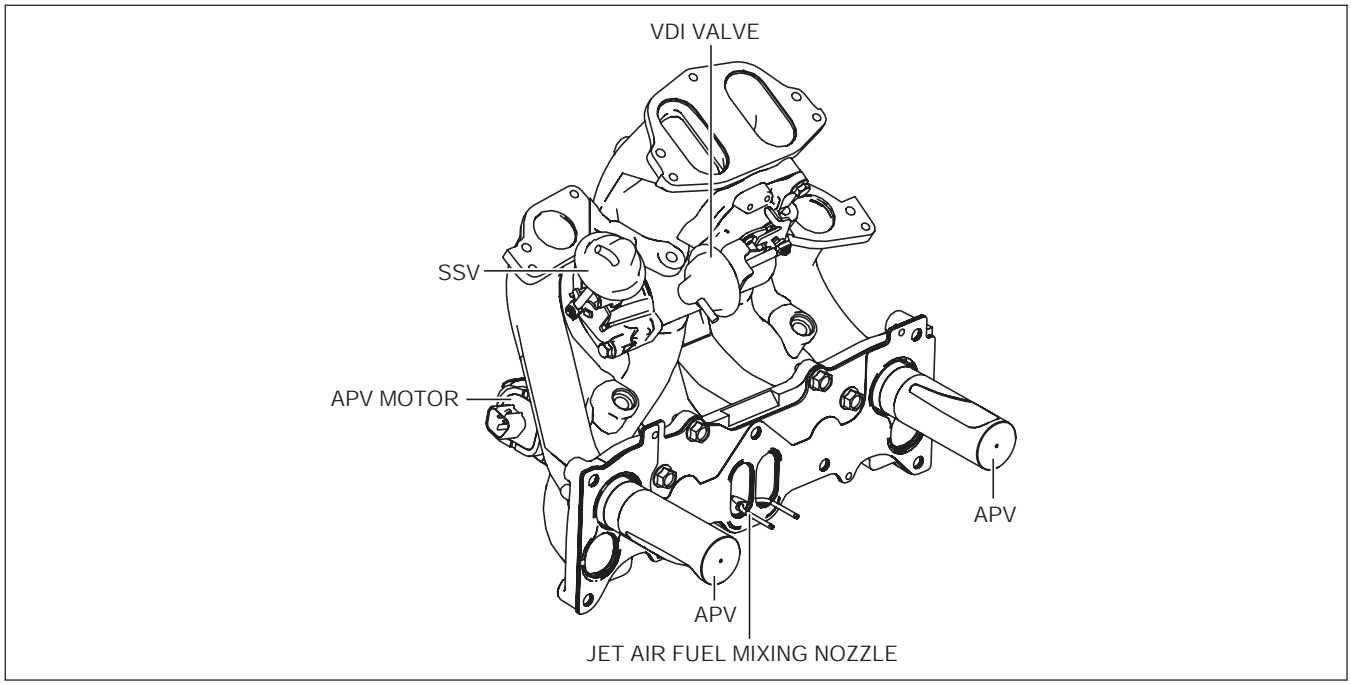

ar8uun00000090

SEQUENTIAL DYNAMIC AIR INTAKE SYSTEM (S-DAIS) STRUCTURE [13B-MSP]

id0113z3661500

- The S-DAIS is composed of the SSV, VDI valve, and VFAD valve (with VFAD) which are opened and closed by intake manifold vacuum or BARO, and the APV which is opened and closed by motor drive.

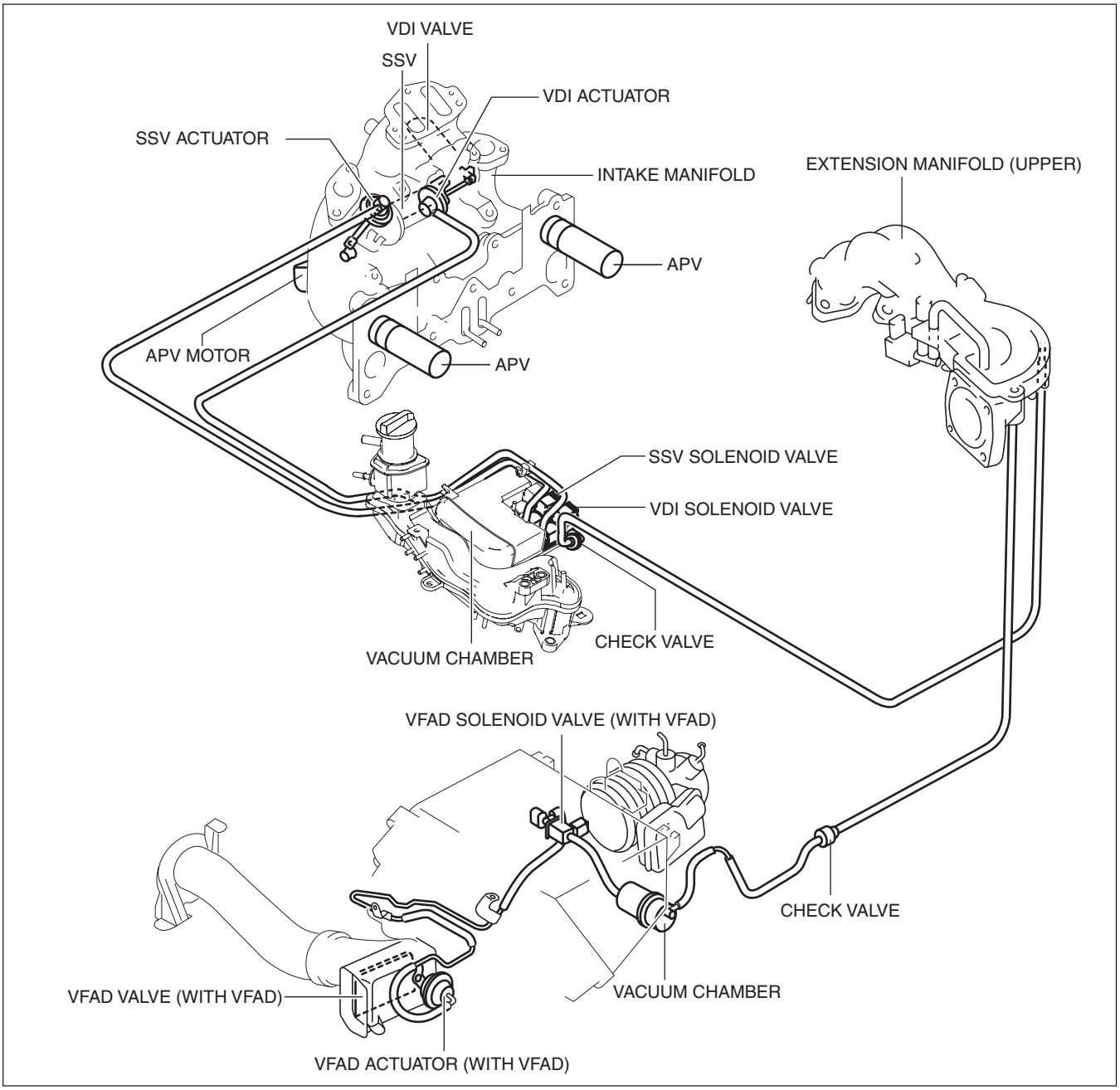

ar8uun00000092

SEQUENTIAL DYNAMIC AIR INTAKE SYSTEM (S-DAIS) OPERATION [13B-MSP]

id0113z3661600

Operation Outline

- To increase intake air amount and combustion efficiency, the S-DAIS controls the size of the intake ports and the air length in the intake pipes by opening or closing the SSV, VDI valve, APV, and VFAD valve (with VFAD) according to engine speed and load condition.

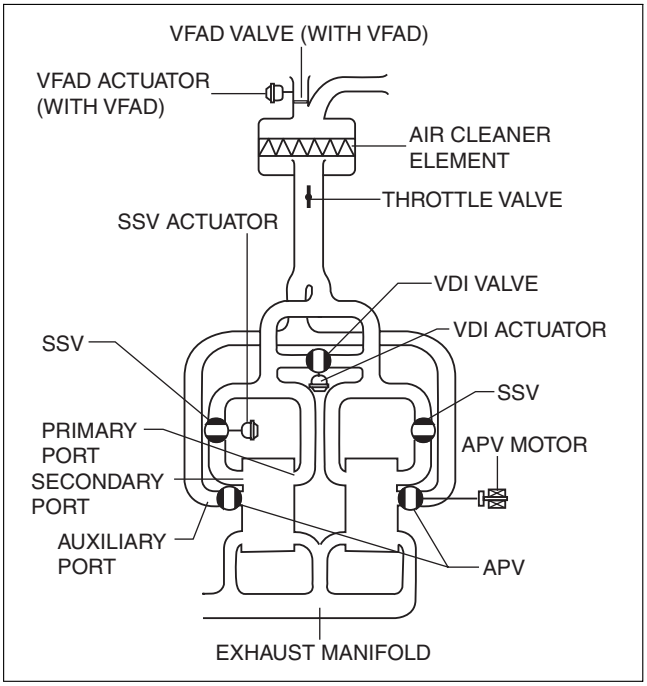

ar8uun00000105

Operation

Low-speed range

- At the low-speed range, the secondary and auxiliary ports close, and a high velocity intake air amount is fed from only the primary port. Due to this, better combustion efficiency is obtained by the improved fuel atomization, producing high torque output.

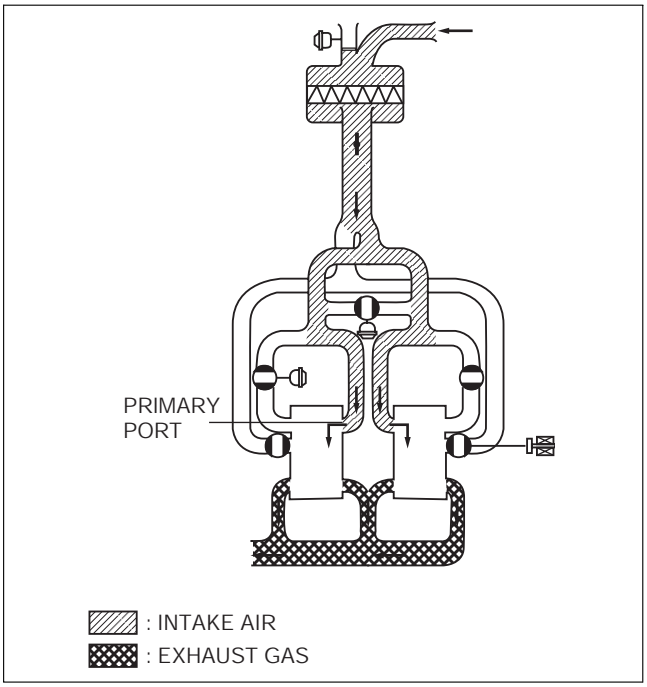

ar8uun00000106

Medium-speed range

- When the engine speed reaches the medium range, the SSV opens and intake air from the secondary port begins. Due to this, the intake air amount increases, improving torque at the engine medium-speed range.

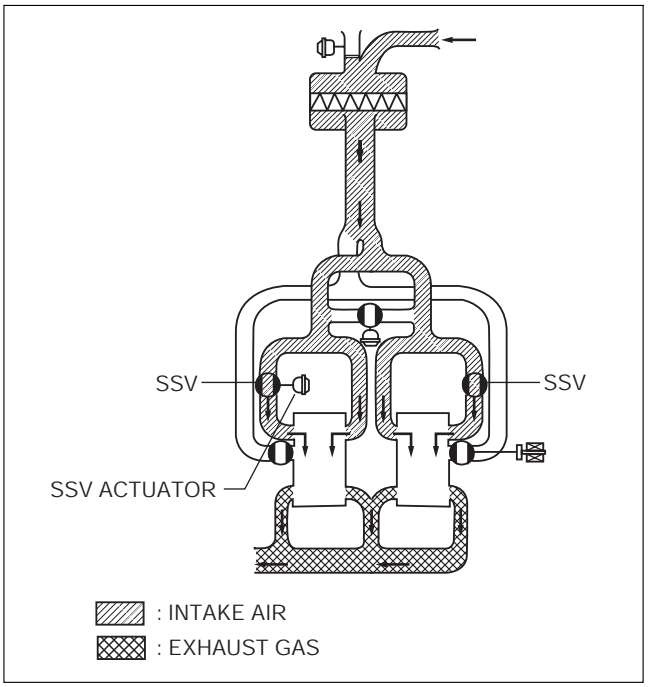

ar8uun00000107

Medium-to-high-speed range

- When the engine speed reaches the medium-tohigh range, the VFAD (with VFAD) and APV open.
- When the VFAD valve (with VFAD) opens, intake air resistance is reduced by the shortening of air length in the fresh-air duct pipe.
- When the APV opens, air from all intake ports is fed, improving torque at the medium-to-high-speed range.

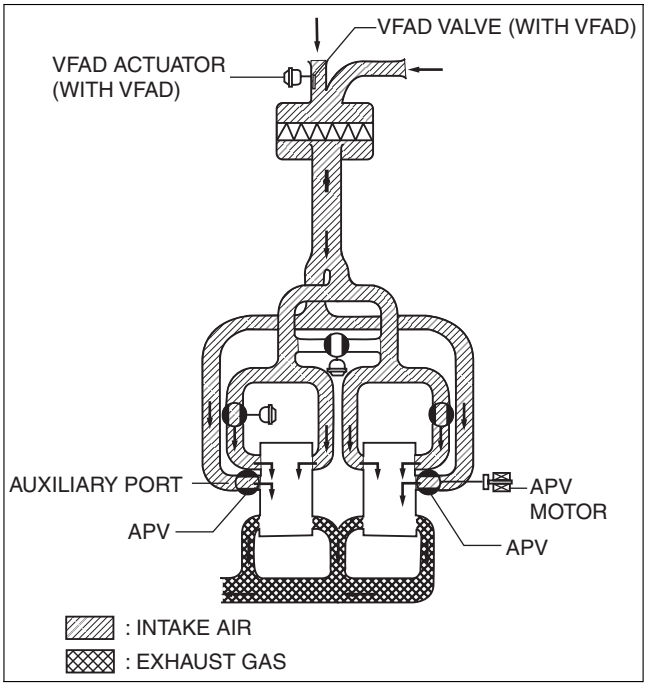

ar8uun00000108

High-speed range

- When the engine speed reaches the high range, the VDI valve opens, and the actual length of the intake air in the pipe is shortened to efficiently provide dynamic air charging effect.

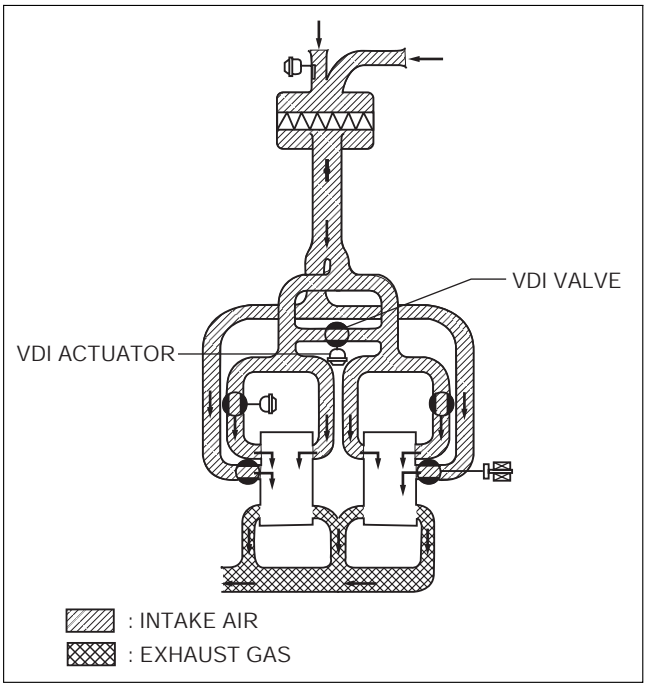

ar8uun00000109

- When the intake ports are shut abruptly, the intake air does not stop due to the inertia effect and it becomes compressed and highly pressurized. This pressurized air becomes a reflected high-pressure wave that pressurizes the intake air in the rotor chambers. This is dynamic air charging pressurization. The intake air amount is increased by the dynamic air charging effect, improving torque at the high-speed range.

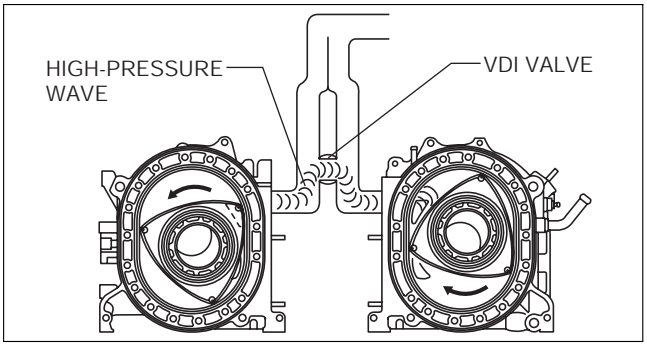

ar8uun00000110

SECONDARY SHUTTER VALVE (SSV) SOLENOID VALVE CONSTRUCTION/OPERATION [13B-MSP]

1d0113z3662400

- Composed of a solenoid coil, spring, plunger, and filter.

  Energized
  - When the solenoid coil is energized, the plunger is pulled back. Pulling the plunger back opens the passage between ports A and B. Due to this, intake manifold vacuum is applied to the actuator.

  De-energized
  - Passage of port A is closed by the reaction force of the spring, and the passage between ports B and C is opened. Due to this, BARO is applied to the actuator.

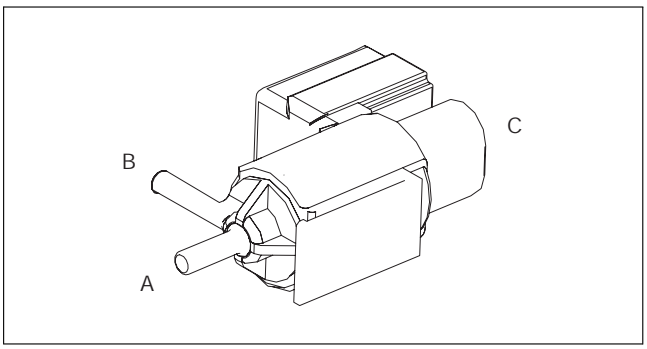

ar8uun00000093

VARIABLE FRESH AIR DUCT (VFAD) SOLENOID VALVE FUNCTION [13B-MSP]

id0113z3662500

With VFAD

- Switches pressure (intake manifold vacuum or BARO) applied to the VFAD actuator according to a signal from the PCM.

VARIABLE FRESH AIR DUCT (VFAD) SOLENOID VALVE CONSTRUCTION/OPERATION [13B-MSP]

id0113z3662600

With VFAD

- Composed of a solenoid coil, spring, plunger, and filter.
  Energized
  - When the solenoid coil is energized, the plunger is pulled back. Pulling the plunger back opens the passage between ports A and B. Due to this, BARO is applied to the actuator.

  De-energized
  - Passage of port A is closed by the reaction force of the spring, and the passage between ports B and C is opened. Due to this, intake manifold vacuum is applied to the actuator.

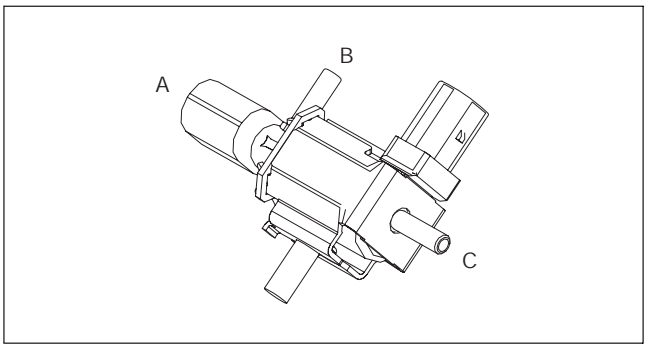

ar8uun00000094

VARIABLE FRESH AIR DUCT (VFAD) ACTUATOR FUNCTION [13B-MSP]

id0113z3663300

With VFAD

- Opens and closes the VFAD valve.

VARIABLE FRESH AIR DUCT (VFAD) ACTUATOR CONSTRUCTION/OPERATION [13B-MSP]

id0113z3663400

With VFAD

- A diaphragm design has been adopted.
- Normally, the rod is pushed by the force of the spring, opening the VFAD valve. When intake manifold vacuum is applied to the diaphragm chamber, the rod is pulled, closing the VFAD valve.

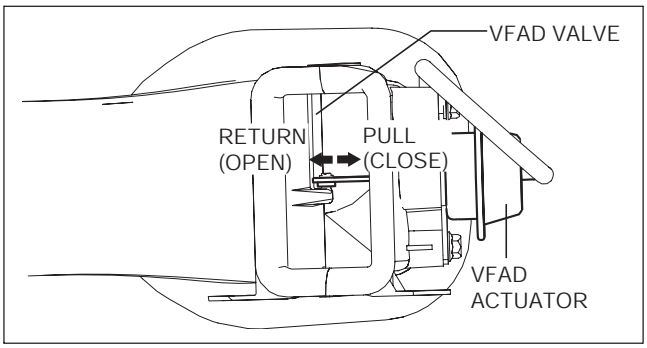

ar8uun00000096

AUXILIARY PORT VALVE (APV) MOTOR FUNCTION [13B-MSP]

id0113z3663100

- Drives the APV motor to open or close the APV according to a signal from the PCM.

AUXILIARY PORT VALVE (APV) MOTOR CONSTRUCTION/OPERATION [13B-MSP]

id0113z3663200

- The position sensor is built into the APV motor.
- The motor is driven according to an operation signal from the PCM.
- The motor driving force is transmitted to the drive gear, counter gear, shaft, and arm, thereby opening or closing the APV.

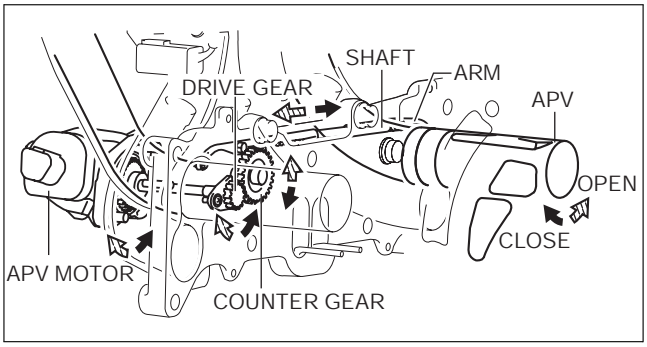

ar8uun00000095

01-14 FUEL SYSTEM [13B-MSP]

FUEL SYSTEM OUTLINE [13B-MSP] 01-14–1
FUEL SYSTEM STRUCTURAL VIEW [13B-MSP] 01-14–1
Engine Compartment Side. 01-14–1
Fuel Tank Side 01-14–2
FUEL SYSTEM DIAGRAM [13B-MSP] 01-14–2
FUEL TANK CONSTRUCTION [13B-MSP] 01-14–3
FUEL INJECTOR CONSTRUCTION/OPERATION [13B-MSP] 01-14–3

FUEL SYSTEM OUTLINE [13B-MSP]

id0114z2100100

Specification

Item	Specification
Fuel tank capacity (L {US gal, Imp gal})	64.0 {16.9, 14.1}

FUEL SYSTEM STRUCTURAL VIEW [13B-MSP]

id0114z2100200

Engine Compartment Side

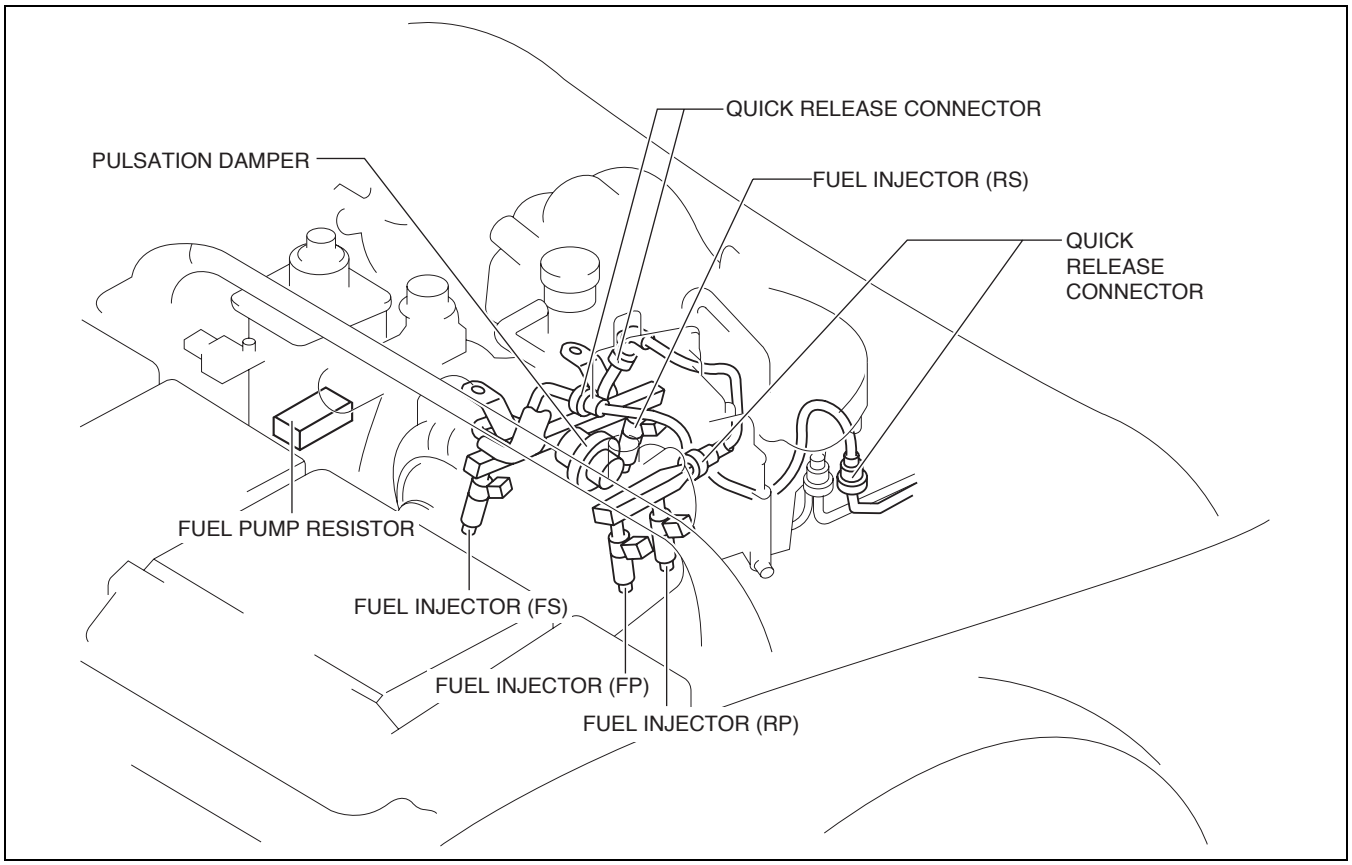

ar8uun00000097

Fuel Tank Side

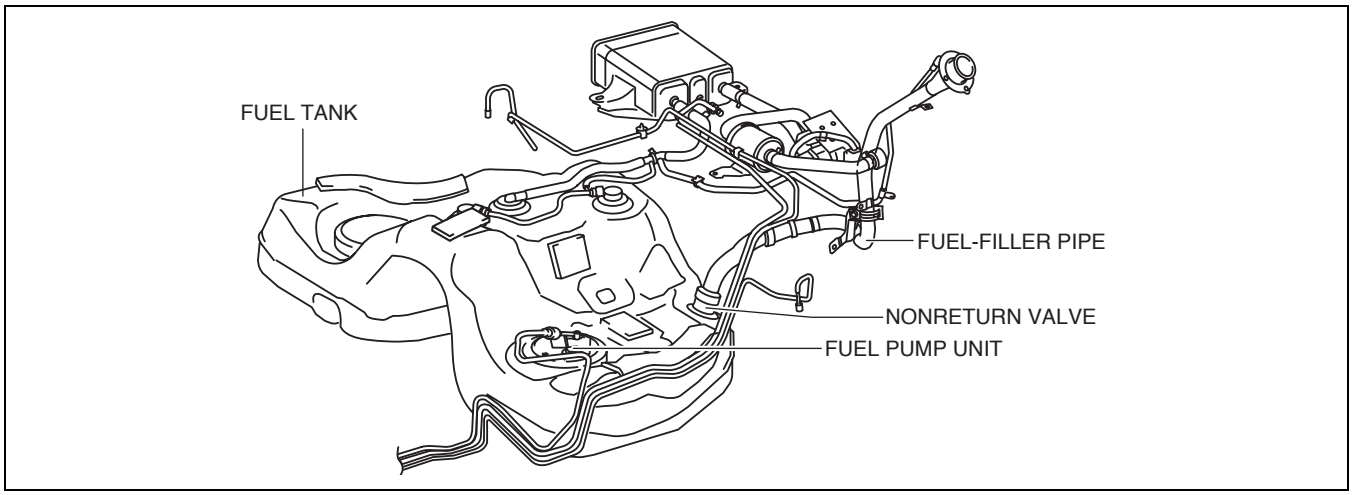

ar8uun00000098

FUEL SYSTEM DIAGRAM [13B-MSP]

id0114z2573500

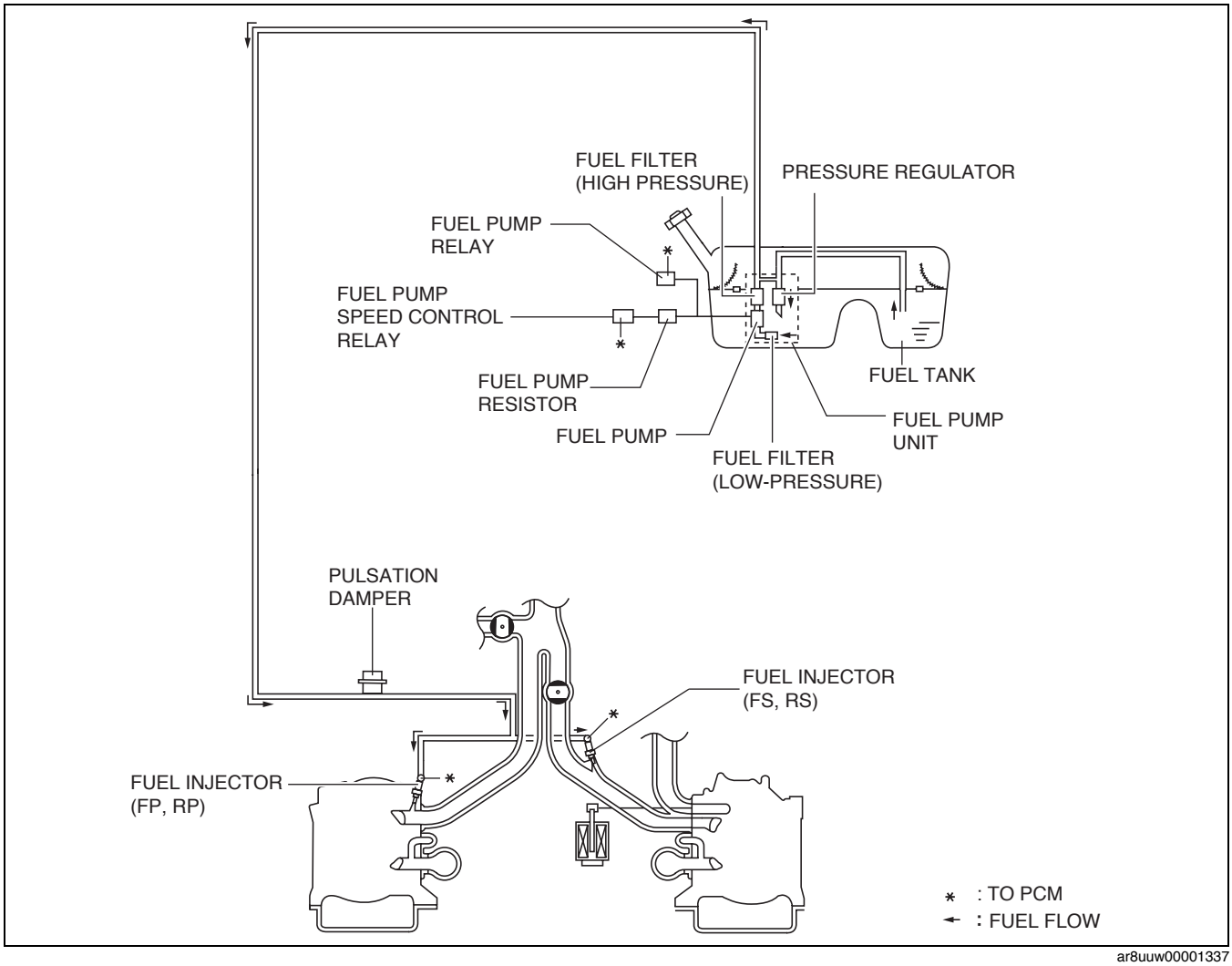

ar8uuw00001337

FUEL TANK CONSTRUCTION [13B-MSP]

id0114z2101900

- Fuel tank capacity is 64.0 L {16.9 US gal, 14.1 Imp gal}.
- Includes two rollover valves, and the fuel shut-off valve that is press-fitted in the evaporative hose above the fuel tank.

FUEL INJECTOR CONSTRUCTION/OPERATION [13B-MSP]

id0114z2101300

Fuel Injector (FP, RP)

- Installed on the intermediate housing at an angle of approx. 45°, and injects fuel near the intake port opening.
- Mainly consists of a coil, spring and needle valve.
- Fuel injector with 12 injection holes and injection angle of approx. 30° adopted to enhance fuel injection vaporization.
- When a PCM signal is sent, exciting current passes through the coil, pulling in the needle valve and injecting fuel.
- The amount of injection is determined by the open time of the needle valve, i.e. the energization time of the coil.

Fuel Injector (FS, RS)

- Installed on the intake manifold.
- Mainly consists of a coil, spring, and needle valve.
- Injects fuel into the intake manifold at an angle of approx. 19°, so that the fuel is drawn into the housing together with intake air.
- When a PCM signal is sent, exciting current passes through the coil, pulling in the needle valve and injecting fuel.
- The amount of injection is determined by the open time of the needle valve, i.e. the energization time of the coil.

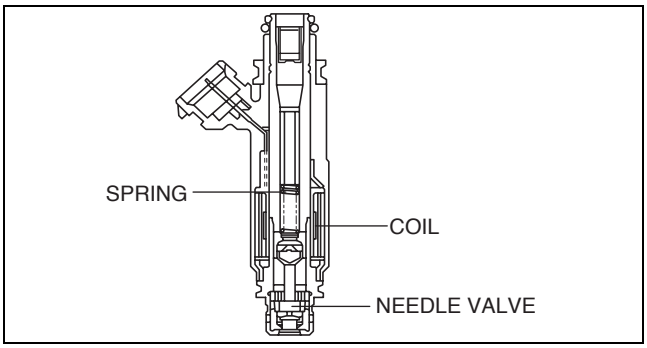

ar8uun00000099

01-16 EMISSION SYSTEM [13B-MSP]

EMISSION SYSTEM
STRUCTURAL VIEW [13B-MSP] 01-16–1
Engine Compartment Side. **01-16–1**
Exhaust System **01-16–1**
Fuel Tank Side **01-16–2**
POSITIVE CRANKCASE VENTILATION (PCV) SYSTEM STRUCTURE [13B-MSP] 01-16–2
EVAPORATIVE EMISSION (EVAP) CONTROL SYSTEM STRUCTURE [13B-MSP] 01-16–3

EMISSION SYSTEM STRUCTURAL VIEW [13B-MSP]

id0116z2100200

Engine Compartment Side

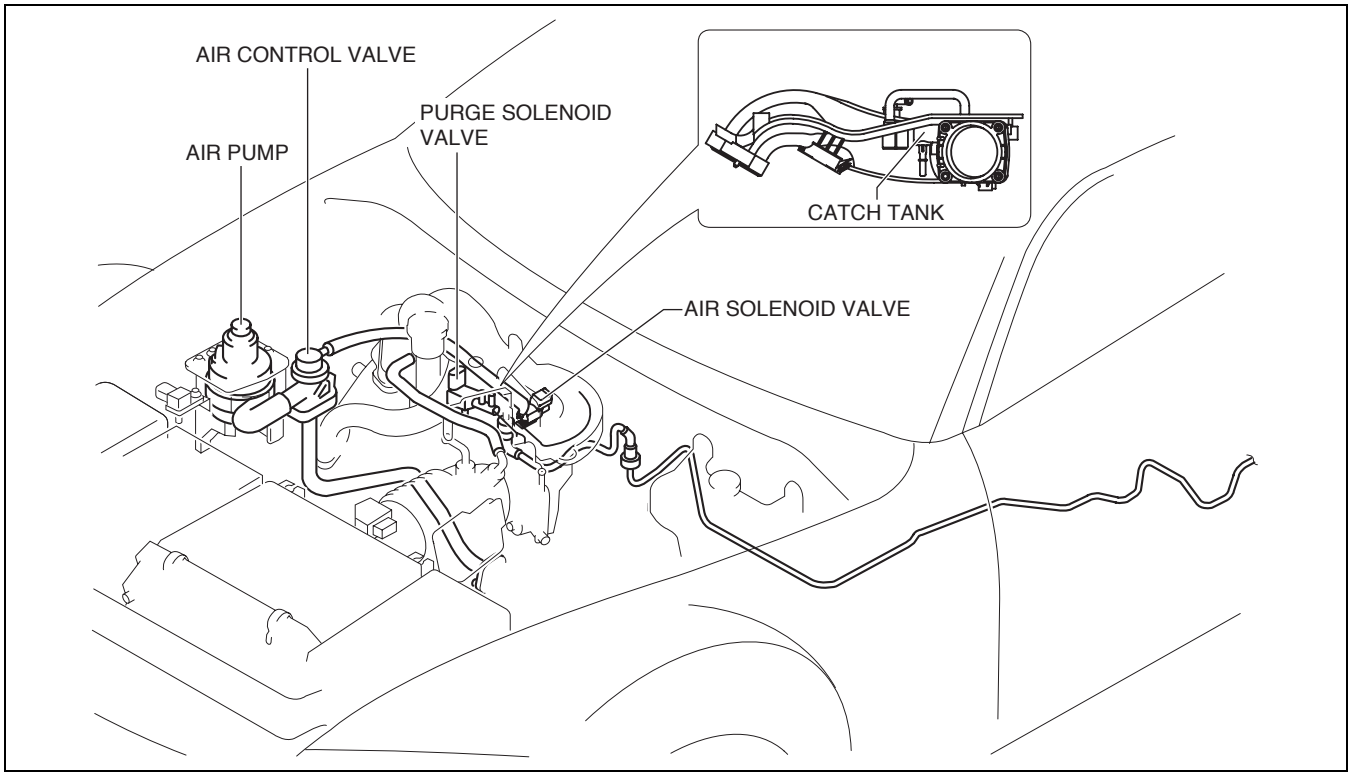

ar8uun00000100

Exhaust System

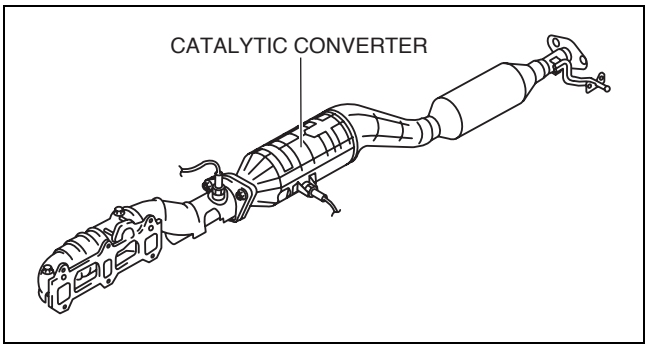

ar8uun00000101

Fuel Tank Side

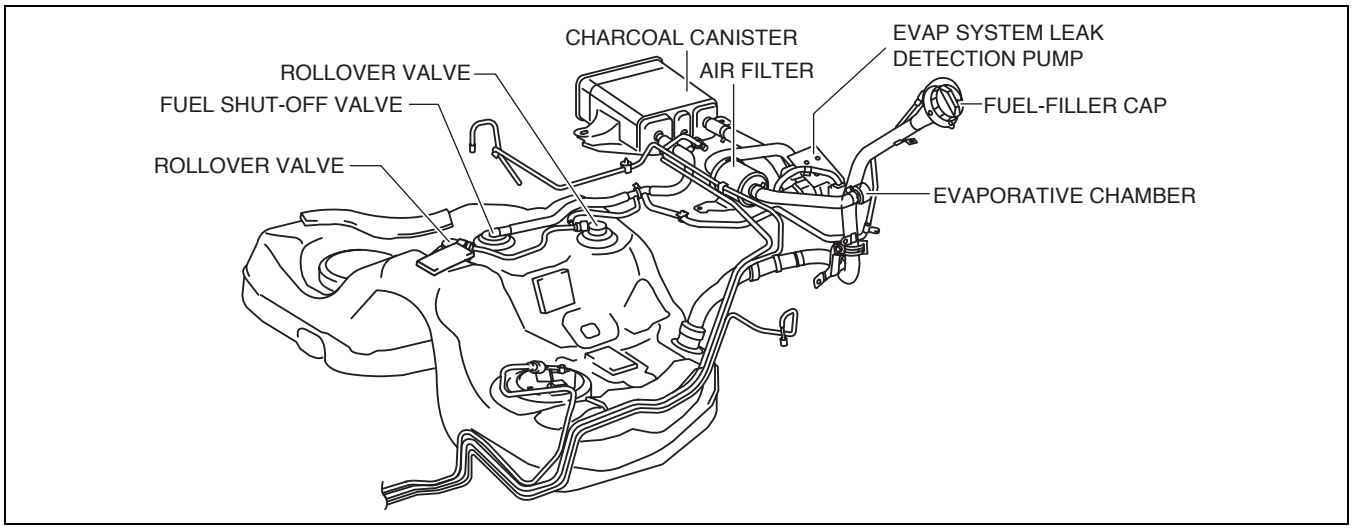

ar8uun00000102

POSITIVE CRANKCASE VENTILATION (PCV) SYSTEM STRUCTURE [13B-MSP]

id0116z2159000

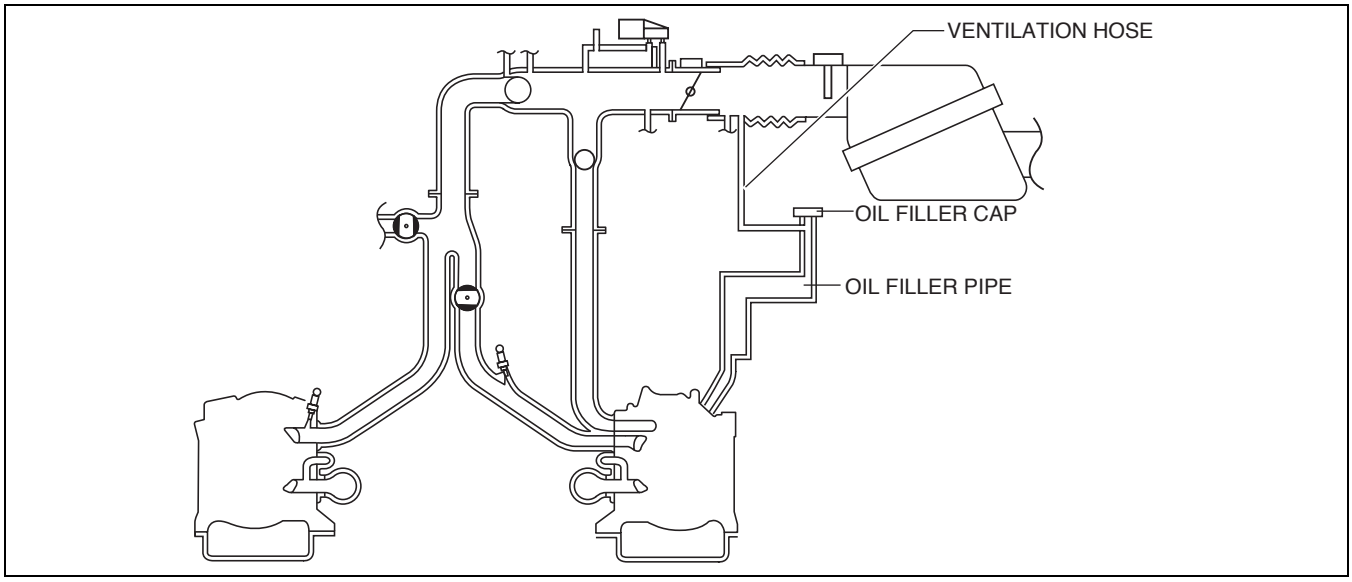

ar8uun00000104

EVAPORATIVE EMISSION (EVAP) CONTROL SYSTEM STRUCTURE [13B-MSP]

id0116z2100900

- Consists of a purge solenoid valve, charcoal canister, catch tank, evaporative chamber, rollover valves, fuel shut-off valve, EVAP system leak detection pump, air filter, and fuel-filler cap.

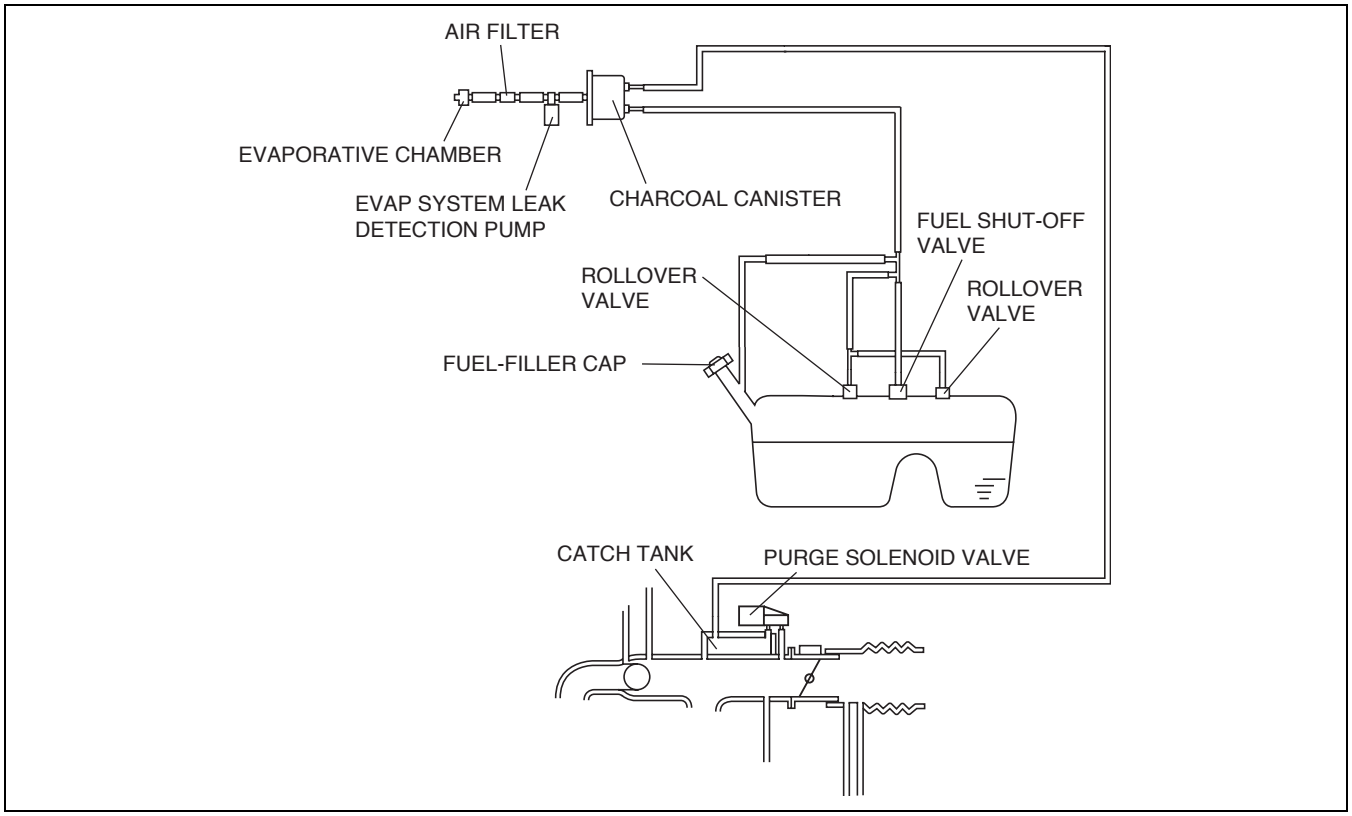

ar8uun00000103

01-17 CHARGING SYSTEM [13B-MSP]

CHARGING SYSTEM OUTLINE [13B-MSP] 01-17–1
Features 01-17–1
GENERATOR CONSTRUCTION [13B-MSP] 01-17–1

CHARGING SYSTEM OUTLINE [13B-MSP]

id0117f2102100

Features

Improved generator output	• Generator changed

GENERATOR CONSTRUCTION [13B-MSP]

id0117f2102300

- With the elimination of the voltage regulator, generator control is carried out by the PCM. Excitation current in the field coil is increased or decreased by the duty signal from the PCM sent to the power transistor built into the generator.

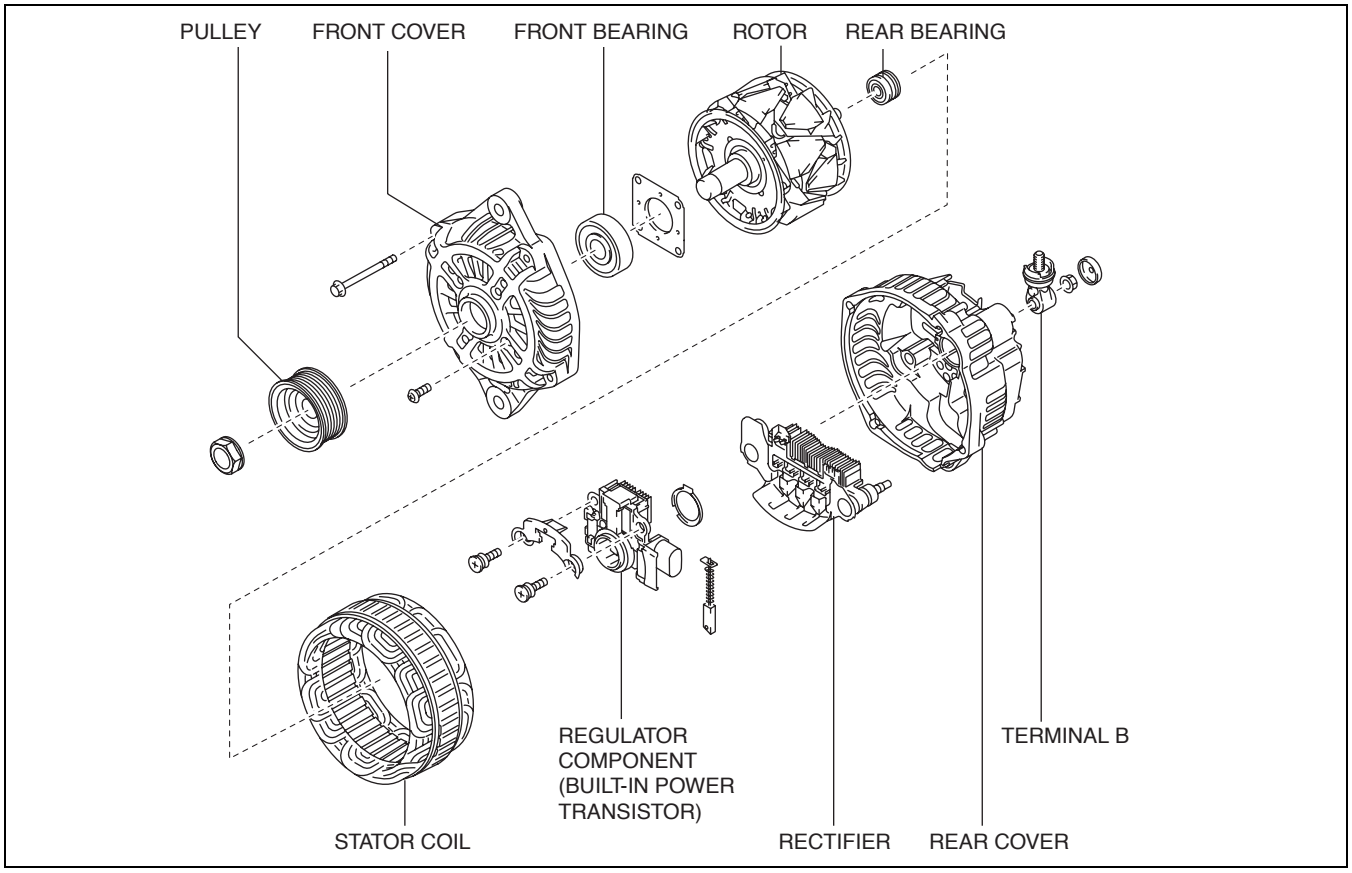

ar8uun00000358

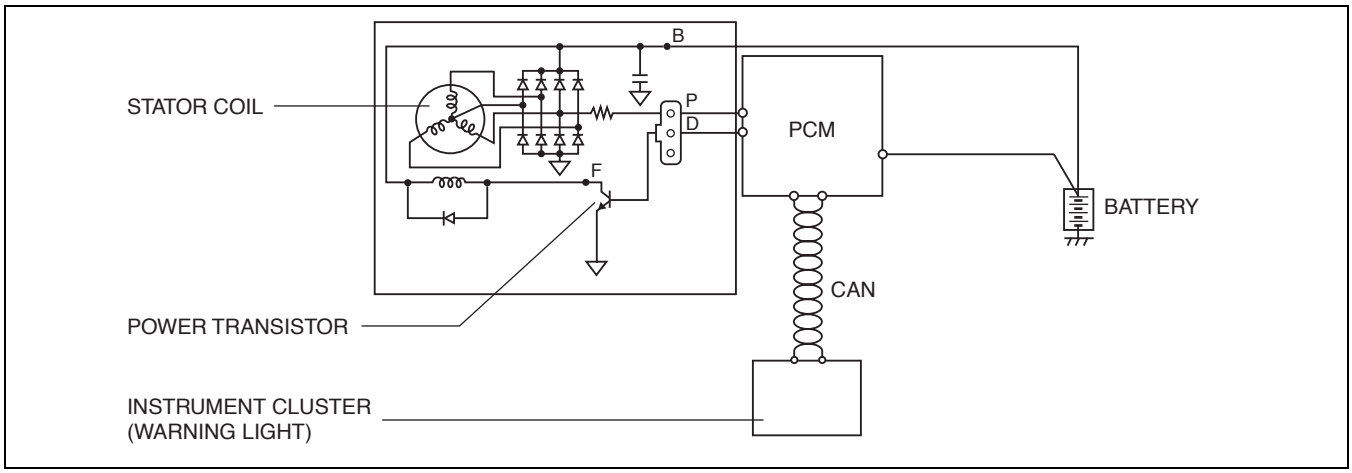

ar8uun00000359

- If there is malfunction in the charging system, the generator warning light in the instrument cluster illuminates. (See 01-02-4 ON-BOARD DIAGNOSTIC SYSTEM TEST MODE [13B-MSP].)

01-20 CRUISE CONTROL SYSTEM [13B-MSP]

CRUISE CONTROL SYSTEM OUTLINE [13B-MSP] 01-20–1
Features 01-20–1
Outline 01-20–1
Component and function 01-20–1
CRUISE CONTROL SYSTEM STRUCTURAL VIEW [13B-MSP] 01-20–2
CRUISE CONTROL SYSTEM BLOCK DIAGRAM [13B-MSP] 01-20–3

CRUISE CONTROL SYSTEM OUTLINE [13B-MSP]

id0120f2145200

Features

Improved driveability	• Cruise control switch changed

Outline

- The cruise control system enables driving at a constant speed by setting vehicle speed with the cruise control switch instead of operating the AP.
- The PCM controls the throttle valve actuator to maintain the vehicle at a constant speed.
- For the control of the cruise control system, refer to the drive-by wire control.

Component and function

Component		Function		Installation location
• ABS HU/CM (CAN communication: Vehicle speed signal) • DSC HU/CM (CAN communication: Vehicle speed signal)		The vehicle speed signal is sent to the PCM from either the ABS HU/CM or the DSC HU/CM.		Engine compartment
Cruise control switch	ON/OFF	ON/OFF	This is the main switch of the cruise control system. Turning the ON/OFF switch to on switches the cruise control system to standby status.	Steering wheel
	SET (-)	SET (-)	When the vehicle speed exceeds 27 km/h {16.7 mph} during normal driving (cruise control system is in standby status) and the SET (-) switch is released after it is pressed, the PCM stores the vehicle speed at the time of the switch is released and the cruise control begins.	
	RES (+)	RES (+)	If the RES (+) switch is pressed while the cruise control is in standby status (PCM has stored a set vehicle speed) and the vehicle speed exceeds 27 km/h {16.7 mph} during normal driving, the cruise control system activates to control the vehicle speed to the set vehicle speed.	
	CANCEL	CANCEL	Pressing the CANCEL switch during cruise control switches the cruise control system to standby status (Set vehicle speed is saved).	
Brake switch		Depressing the brake pedal during cruise control switches the cruise control system to standby status (Set vehicle speed is saved).		Brake pedal
CPP switch (MT)		Depressing the clutch pedal during cruise control switches the cruise control system to standby status (Set vehicle speed is saved).		Clutch pedal
Neutral switch (MT)		Shifting to neutral during cruise control switches the cruise control system to standby status (Set vehicle speed is saved).		Manual transmission
TCM (AT) (CAN communication: Neutral signal)		Changing the selector lever from the D range to the N position during cruise control switches the cruise control system to standby status (Set vehicle speed is saved).		Automatic transmission
PCM		• The cruise control system activates or stops based on the cruise control switch ON/OFF signal. • The throttle actuator is operated so that the vehicle speed is the pre-set vehicle speed during cruise control system.		Engine compartment
Throttle valve actuator		The duty signal sent from the PCM adjusts the throttle valve opening angle.		Throttle body
Cruise main indicator light		This illuminates while the cruise control system is in standby or control status.		Instrument cluster
Cruise set indicator light		This illuminates while the cruise control system is in control status.		

CRUISE CONTROL SYSTEM STRUCTURAL VIEW [13B-MSP]

id0120f2145300

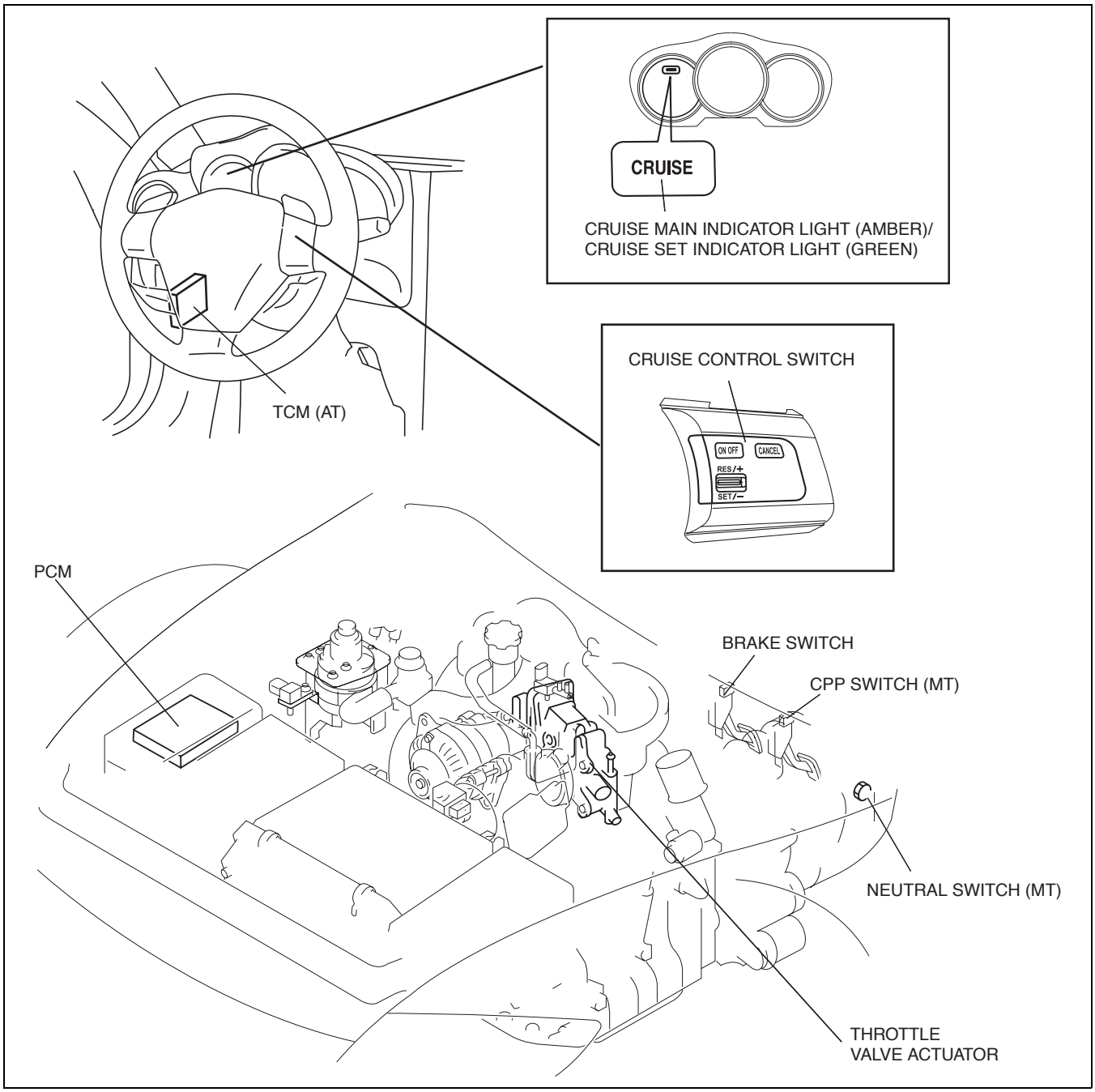

ar8uun00000227

CRUISE CONTROL SYSTEM BLOCK DIAGRAM [13B-MSP]

id0120f2665700

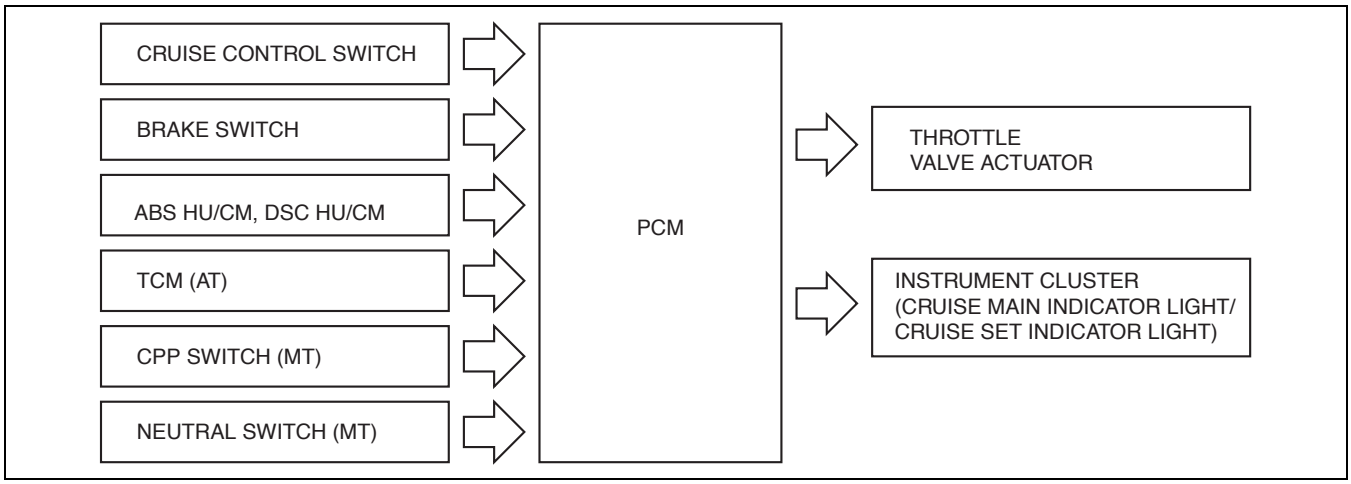

ar8uun00000228

01-40 CONTROL SYSTEM [13B-MSP]

ENGINE CONTROL SYSTEM OUTLINE [13B-MSP] 01-40–2
Features 01-40–2
Specification 01-40–2
ENGINE CONTROL SYSTEM STRUCTURAL VIEW [13B-MSP] 01-40–3
ENGINE CONTROL SYSTEM DIAGRAM [13B-MSP] 01-40–4
ENGINE CONTROL SYSTEM WIRING DIAGRAM [13B-MSP] 01-40–5
ENGINE CONTROL SYSTEM BLOCK DIAGRAM [13B-MSP] 01-40–7
ENGINE CONTROL SYSTEM RELATION CHART [13B-MSP] 01-40–8
DRIVE-BY-WIRE RELAY CONTROL OPERATION [13B-MSP] 01-40–9
Idle Speed Control 01-40–9
Accelerator Control 01-40–10
Traction Control 01-40–10
Cruise Control 01-40–11
Vehicle Speed Limiter (AT) 01-40–12
SEQUENTIAL DYNAMIC AIR INTAKE SYSTEM (S-DAIS) CONTROL OUTLINE [13B-MSP] 01-40–12
SEQUENTIAL DYNAMIC AIR INTAKE SYSTEM (S-DAIS) CONTROL BLOCK DIAGRAM [13B-MSP] 01-40–12
SEQUENTIAL DYNAMIC AIR INTAKE SYSTEM (S-DAIS) CONTROL OPERATION [13B-MSP] . . 01-40–13
Operation Outline 01-40–13
Operation list 01-40–13
Operation 01-40–13
FUEL INJECTION CONTROL OUTLINE [13B-MSP] 01-40–13
FUEL INJECTION CONTROL BLOCK DIAGRAM [13B-MSP] 01-40–14
FUEL INJECTION CONTROL OPERATION [13B-MSP] 01-40–14
Fuel Injection Timing 01-40–14
Air/fuel Ratio Control 01-40–16
Fuel Injection Distribution Control 01-40–17
Synchronized Injection Control 01-40–17
Non-synchronized Injection Control . . . 01-40–19
Fuel Cut Control 01-40–19
METERING OIL PUMP CONTROL OUTLINE [13B-MSP] 01-40–20
METERING OIL PUMP CONTROL BLOCK DIAGRAM [13B-MSP] 01-40–20
METERING OIL PUMP CONTROL OPERATION [13B-MSP] 01-40–20
Outline 01-40–20
Operation timing 01-40–21
Ignition switch off function 01-40–21
OIL PRESSURE CONTROL OUTLINE [13B-MSP] 01-40–21
OIL PRESSURE CONTROL BLOCK DIAGRAM [13B-MSP] 01-40–21
OIL PRESSURE CONTROL OPERATION [13B-MSP] 01-40–21
Operation 01-40–21
AIR FUEL RATIO (A/F) SENSOR, HEATED OXYGEN SENSOR (HO2S) HEATER CONTROL OUTLINE [13B-MSP] 01-40–22
AIR FUEL RATIO (A/F) SENSOR, HEATED OXYGEN SENSOR (HO2S) HEATER CONTROL BLOCK DIAGRAM [13B-MSP] 01-40–22
AIR FUEL RATIO (A/F) SENSOR, HEATED OXYGEN SENSOR (HO2S) HEATER CONTROL OPERATION [13B-MSP] 01-40–23
Operation Conditions 01-40–23
ELECTRICAL FAN CONTROL OUTLINE [13B-MSP] 01-40–23
ELECTRICAL FAN CONTROL BLOCK DIAGRAM [13B-MSP] 01-40–23
ELECTRICAL FAN CONTROL OPERATION [13B-MSP] 01-40–23
PCM FUNCTION [13B-MSP] 01-40–25
Function List 01-40–25
PCM CONSTRUCTION/OPERATION [13B-MSP] 01-40–25
AIR FUEL RATIO (A/F) SENSOR FUNCTION [13B-MSP] 01-40–25
AIR FUEL RATIO (A/F) SENSOR CONSTRUCTION/OPERATION [13B-MSP] 01-40–26
HEATED OXYGEN SENSOR (HO2S) FUNCTION [13B-MSP] 01-40–26
HEATED OXYGEN SENSOR (HO2S) CONSTRUCTION/OPERATION [13B-MSP] 01-40–26
PCM TEMPERATURE SENSOR FUNCTION [13B-MSP] 01-40–27
PCM TEMPERATURE SENSOR CONSTRUCTION/OPERATION [13B-MSP] 01-40–27
KNOCK SENSOR (KS) CONSTRUCTION/OPERATION [13B-MSP] 01-40–27
BAROMETRIC PRESSURE (BARO) SENSOR CONSTRUCTION/OPERATION [13B-MSP] 01-40–28
AUXILIARY PORT VALVE (APV) POSITION SENSOR FUNCTION [13B-MSP] 01-40–28
AUXILIARY PORT VALVE (APV) POSITION SENSOR CONSTRUCTION/OPERATION [13B-MSP] 01-40–28
OIL PRESSURE SENSOR FUNCTION [13B-MSP] 01-40–29
OIL PRESSURE SENSOR CONSTRUCTION/OPERATION [13B-MSP] 01-40–29
METERING OIL PUMP DRIVER FUNCTION [13B-MSP] 01-40–29
METERING OIL PUMP DRIVER CONSTRUCTION/OPERATION [13B-MSP] 01-40–29

ENGINE CONTROL SYSTEM OUTLINE [13B-MSP]

id0140g1100100

Features

Improved engine torque and output	• S-DAIS control changed • APV position sensor No.1, No.2 adopted
Improved engine reliability	• KS No.1, No.2 adopted • Electrical fan control changed • Fuel injection control changed
Improved lubricity	• Metering oil pump control changed — Metering oil pump driver adopted • Oil pressure control adopted — Oil pressure sensor adopted

Specification

Item	Specification
Neutral switch (MT)	ON/OFF
CPP switch (MT)	ON/OFF
SSV switch	ON/OFF
Cruise control switch	ON/OFF
APV position sensor No.1, No.2	Magneto resistance element
ECT sensor	Thermistor
IAT sensor	Thermistor
TP sensor	Hall element
APP sensor	Hall element
MAF sensor	Hot-wire
A/F sensor	Zirconia element (Wide-range air/fuel ratio sensor)
HO2S	Zirconia element (Stoichiometric air/fuel ratio sensor)
KS No.1, No.2	Piezoelectric element
Eccentric shaft position sensor	Magnetic pickup
Oil pressure sensor	Piezoelectric element
BARO sensor (built into PCM)	Piezoelectric element
PCM temperature sensor (built into PCM)	Thermistor

ENGINE CONTROL SYSTEM STRUCTURAL VIEW [13B-MSP]

id0140g1100200

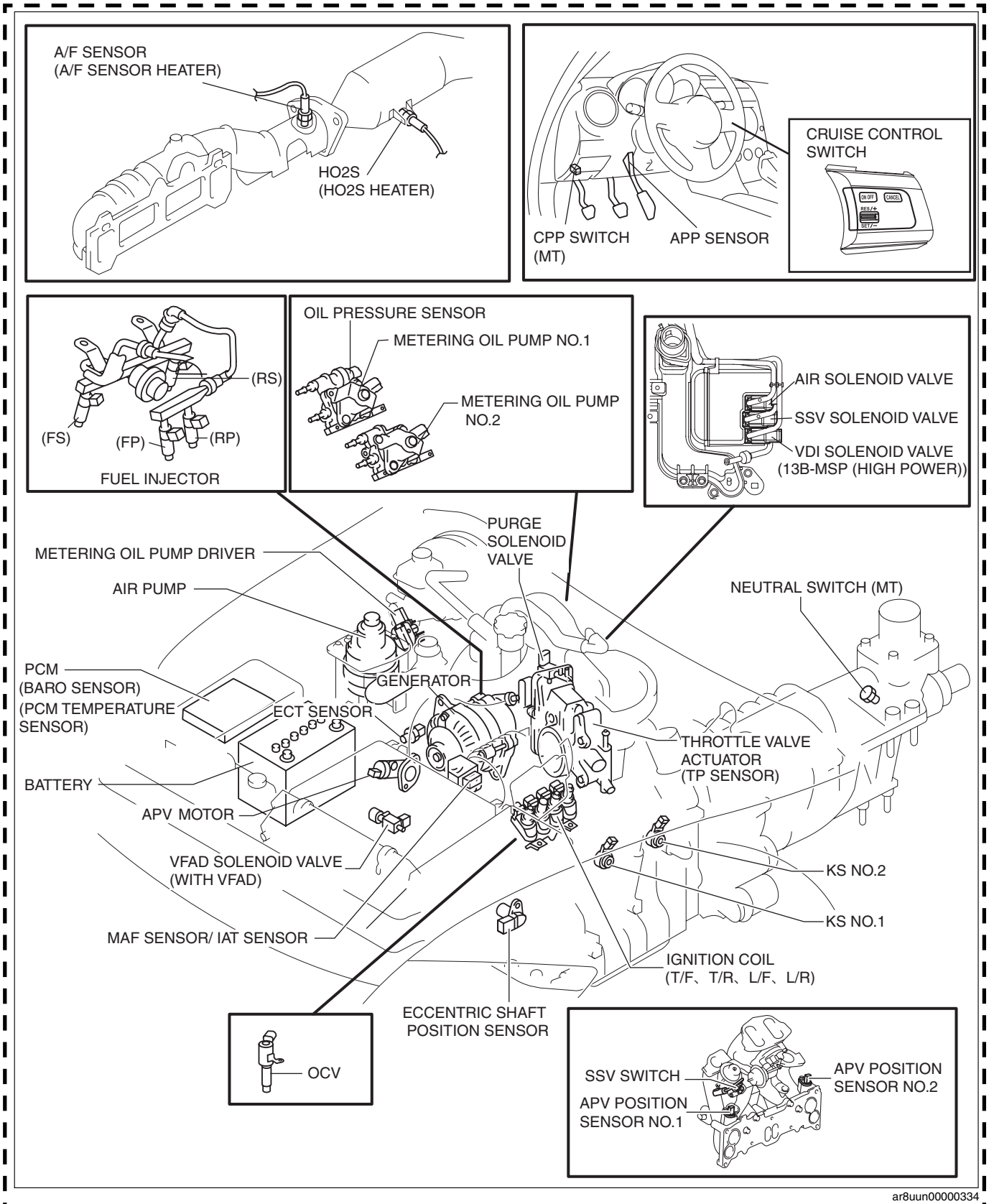

ar8uun00000334

ENGINE CONTROL SYSTEM DIAGRAM [13B-MSP]

id0140g1100300

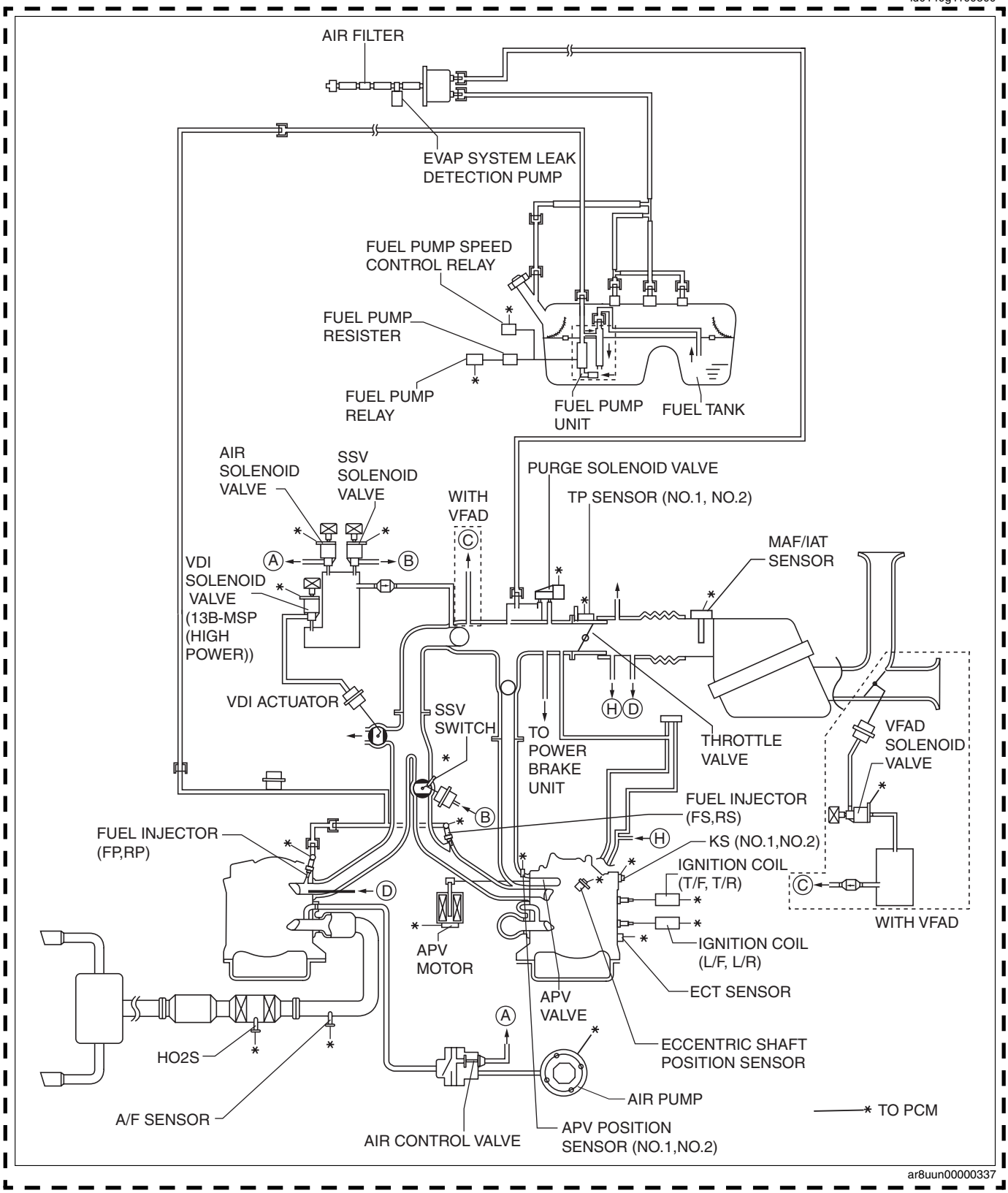

ar8uun00000337

ENGINE CONTROL SYSTEM WIRING DIAGRAM [13B-MSP]

id0140g1100400

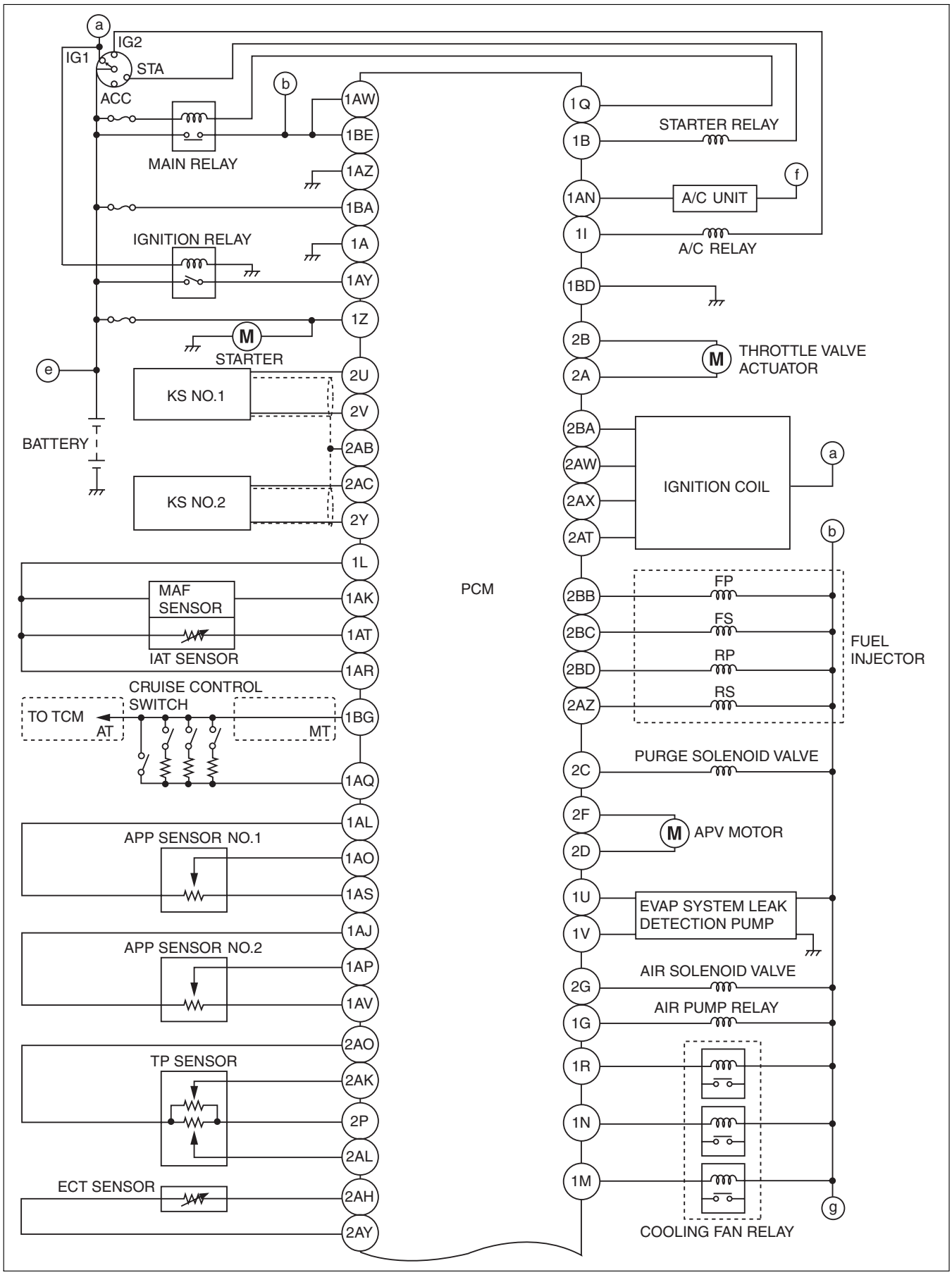

ar8uuw00002491

CONTROL SYSTEM [13B-MSP]

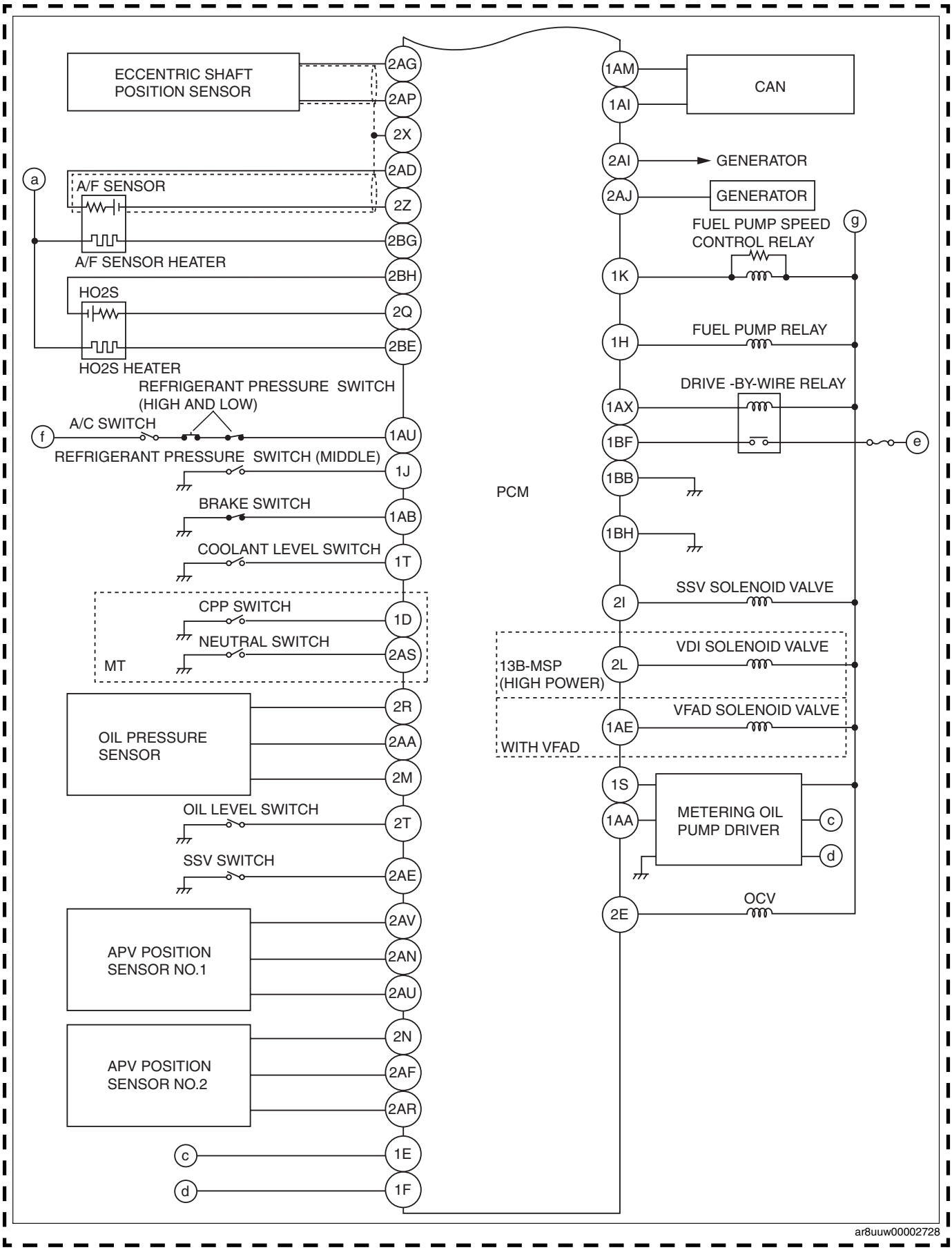

ENGINE CONTROL SYSTEM BLOCK DIAGRAM [13B-MSP]

id0140g1100500

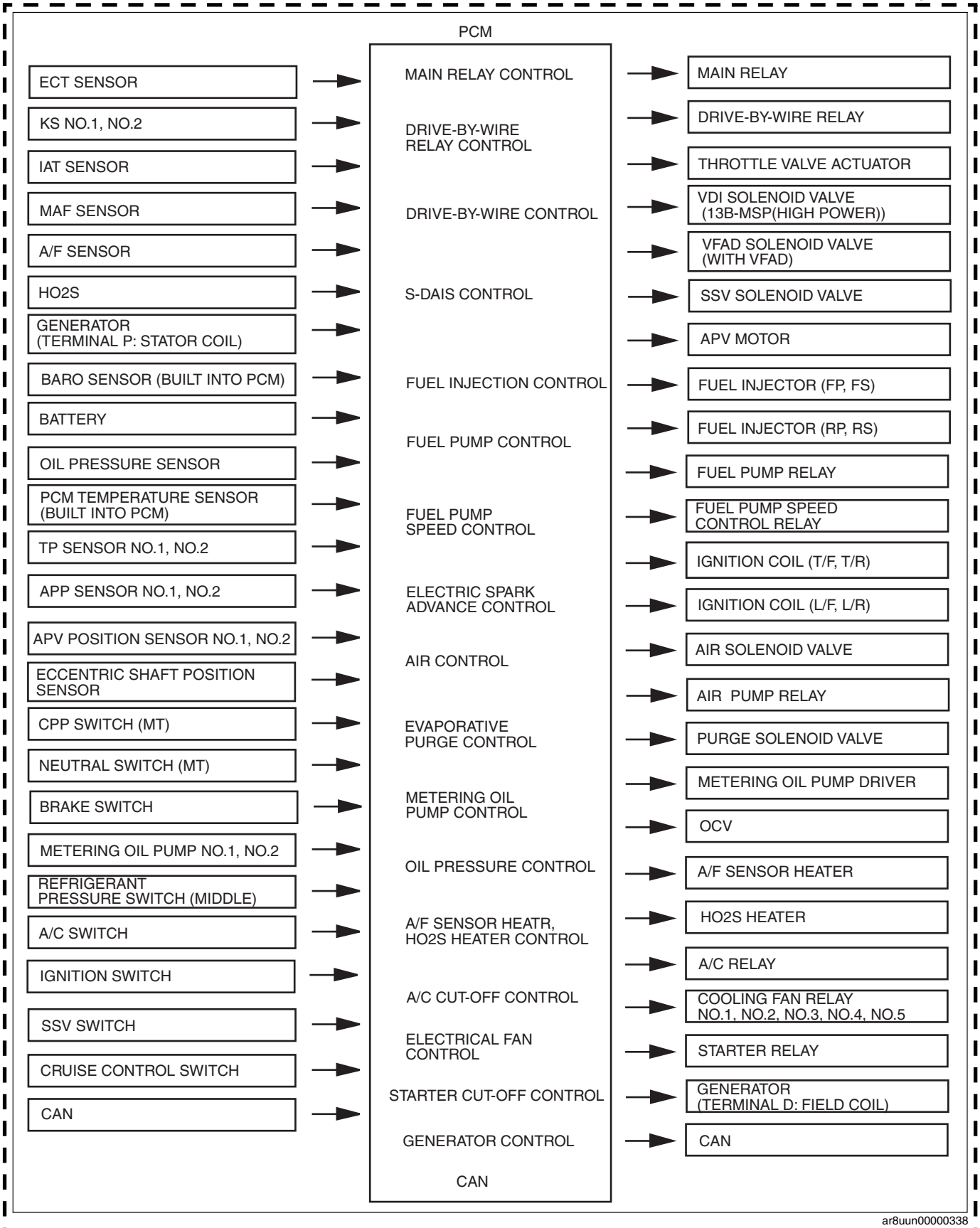

ar8uun00000338

ENGINE CONTROL SYSTEM RELATION CHART [13B-MSP]

id0140g1100600

- Each control system and their related input and output parts are as follows.

Item	MAIN RELAY CONTROL	DRIVE-BY-WIRE RELAY CONTROL	DRIVE-BY-WIRE CONTROL	S-DAIS CONTROL	FUEL INJECTION CONTROL	FUEL PUMP CONTROL	FUEL PUMP SPEED CONTROL	ELECTRIC SPARK ADVANCE CONTROL	AIR CONTROL	EVAPORATIVE PURGE CONTROL	METERING OIL PUMP CONTROL	OIL PRESURE CONTROL	A/F SENSOR HEATER, HO2S HEATER CONTROL	A/C CUT-OFF CONTROL	ELECTRICAL FAN CONTROL	STARTER CUT-OFF CONTROL	GENERATOR CONTROL	CAN
Input																		
ECT sensor	×		×	×	×			×	×	×	×	×	×	×	×		×	
KS No.1, No.2								×										
IAT sensor	×		×		×		×	×	×	×	×						×	
MAF sensor			×	×	×			×		×								
A/F sensor					×				×	×			×					
HO2S					×					×			×					
Generator (Terminal P: stator coil)			×					×									×	
BARO sensor (built into PCM)			×	×	×		×		×	×	×							
Battery			×		×		×	×			×	×	×				×	
Oil pressure sensor	×										×	×						
PCM temperature sensor (built into PCM)														×			×	
TP sensor No.1, No.2	×		×		×			×						×				
APP sensor No.1, No.2			×		×													
APV position sensor No.1, No.2				×														
Eccentric shaft position sensor			×	×	×	×	×	×	×	×	×	×	×	×			×	
CPP switch (MT)			×		×			×						×				
Neutral switch (MT)			×		×			×						×			×	
Brake switch			×		×			×									×	
Refrigerant pressure switch (middle)			×											×	×			
A/C switch			×		×			×						×	×			
Ignition switch	×	×	×	×	×	×	×				×						×	
SSV switch				×														
Cruise control switch			×					×										
CAN			×		×			×	×	×				×		×	×	×
Output																		
Main relay	×																	
Drive-by-wire relay		×																
Throttle valve actuator			×															
VDI solenoid valve (13B-MSP(high power))				×														
VFAD solenoid valve (with VFAD)				×														
SSV solenoid valve				×														

Item	MAIN RELAY CONTROL	DRIVE-BY-WIRE RELAY CONTROL	DRIVE-BY-WIRE CONTROL	S-DAIS CONTROL	FUEL INJECTION CONTROL	FUEL PUMP CONTROL	FUEL PUMP SPEED CONTROL	ELECTRIC SPARK ADVANCE CONTROL	AIR CONTROL	EVAPORATIVE PURGE CONTROL	METERING OIL PUMP CONTROL	OIL PRESURE CONTROL	A/F SENSOR HEATER, HO2S HEATER CONTROL	A/C CUT-OFF CONTROL	ELECTRICAL FAN CONTROL	STARTER CUT-OFF CONTROL	GENERATOR CONTROL	CAN
APV motor				×														
Fuel injector (FP, FS)					×													
Fuel injector (RP, RS)					×													
Fuel pump relay						×												
Fuel pump speed control relay							×											
Ignition coil (T/F, T/R)								×										
Ignition coil (L/F,L/R)								×										
Air solenoid valve									×									
Air pump relay									×									
Purge solenoid valve										×								
Metering oil pump driver											×							
Metering oil pump No.1, No.2											×							
OCV												×						
A/F sensor heater													×					
HO2S heater													×					
A/C relay														×				
Cooling fan relay No.1, No.2, No.3, No.4, No.5															×			
Starter relay																×		
Generator (terminal D: field coil)																	×	
CAN																		×

DRIVE-BY-WIRE RELAY CONTROL OPERATION [13B-MSP]

id0140g1170800

Idle Speed Control

- Controls the throttle valve opening angle so that it is close to the target idle speed calculated by the PCM.
- The PCM calculates the target throttle opening angle by adding each type of correction to the basic duty value which is the basis of the throttle valve opening angle, and then sends a duty signal to the throttle valve actuator. The basic duty value is determined by the target engine speed.
- Each type of correction is as follows.

Correction

Correction	Purpose	Condition	Amount of Correction
Water temperature correction	Corrects changes in engine friction resistance based on changes in engine temperature.	Determines correction amount based on ECT.	Correction amount decreases as ECT increases.
Correction at engine start	Prevents idle speed dropping off after engine start.	Directly after cranking and engine-start.	Correction amount increases as ECT decreases.
Feedback correction	Performs feedback control so that idle speed is close to the target idle speed.	• Executes feedback conditions when all of the following conditions are met: — Vehicle stopped — AP fully closed	• Correction amount decreases when the idle speed is higher than the target idle speed. • Correction amount increases when the idle speed is lower than the target idle speed.
Learning correction	Corrects air flow amount changes from changes in the engine due to aged deterioration such as engine friction resistance and air leakage from the throttle valve.	Determined by the amount of feedback correction when external load correction and purge control stop.	Learning correction executed when upper or lower limit of feedback correction exceeds the fixed value.
Purge correction	Increase in air from purge control is subtracted from the target throttle opening angle. Increases throttle valve opening angle to prevent rotation fluctuation from changes in air/fuel ratio when purge concentration is high.	Determined by the purge flow amount and purge concentration when purge control is executed.	• Correction amount decreases as purge flow amount increases. • Correction amount increases as purge flow concentration increases.
Load correction when vehicle accelerates from idle (MT)	Prevents engine speed drop after vehicle accelerates from idle.	At acceleration from idle	The amount of correction increases as the idle speed depression amount increases.
External load correction	• Prevents engine speed drop when the A/C and electrical load are operating. • Prevents engine speed revving when the A/C and electrical load are off.	• When any of the following signals are input: — A/C switch — Refrigerant pressure switch (middle) — Generator current value	Correction amount increases as external load increases.
Fast idle up correction	Rapidly activates the catalytic converter after cold-engine start.	Synchronizes fast idle correction for electric spark control.	Correction amount increases as the ignition timing retard for the fast idling correction of the ignition timing control advances.
Barometric pressure correction	Compensates air density variation caused by barometric pressure change.	Correction amount is determined according to barometric pressure.	Correction amount increases as barometric pressure decreases.
Intake air temperature correction	Compensates air density variation caused by intake air temperature change.	Correction amount is determined according to barometric pressure.	Correction amount increases as intake air temperature increases.

Accelerator Control

- Controls the throttle valve opening angle through control of the throttle valve actuator, according to the amount of AP depression.
- The PCM controls the throttle valve actuator so that the actual throttle valve opening angle is close to the target throttle valve opening angle.
- The final throttle valve opening angle is determined by the sum of the target throttle opening angle during idling and the target throttle valve opening angle during regular driving.
- The target throttle valve opening angle during regular driving is determined based on the transmission gear position, the amount of AP depression and the engine speed.
- The PCM sets the throttle valve to the fully-closed position when the ignition switch is on or off and executes the idle position learning function to learn the throttle valve position. Due to this, changes in the throttle valve opening angle due to age deterioration are corrected.
- When the ignition switch is off, a main relay on request is output and the fully-closed learning function is executed.

Traction Control

- The PCM calculates the target throttle valve opening angle by the torque up/down request signal from the DSC HU/CM and TCM and the engine speed.

Cruise Control

- Calculates the throttle valve opening angle based on the deviation of the actual vehicle speed from the set vehicle speed which was set with the cruise control switch and sends a duty signal to the throttle valve actuator.
- The PCM controls the actual vehicle speed so that it is close to the set vehicle speed.

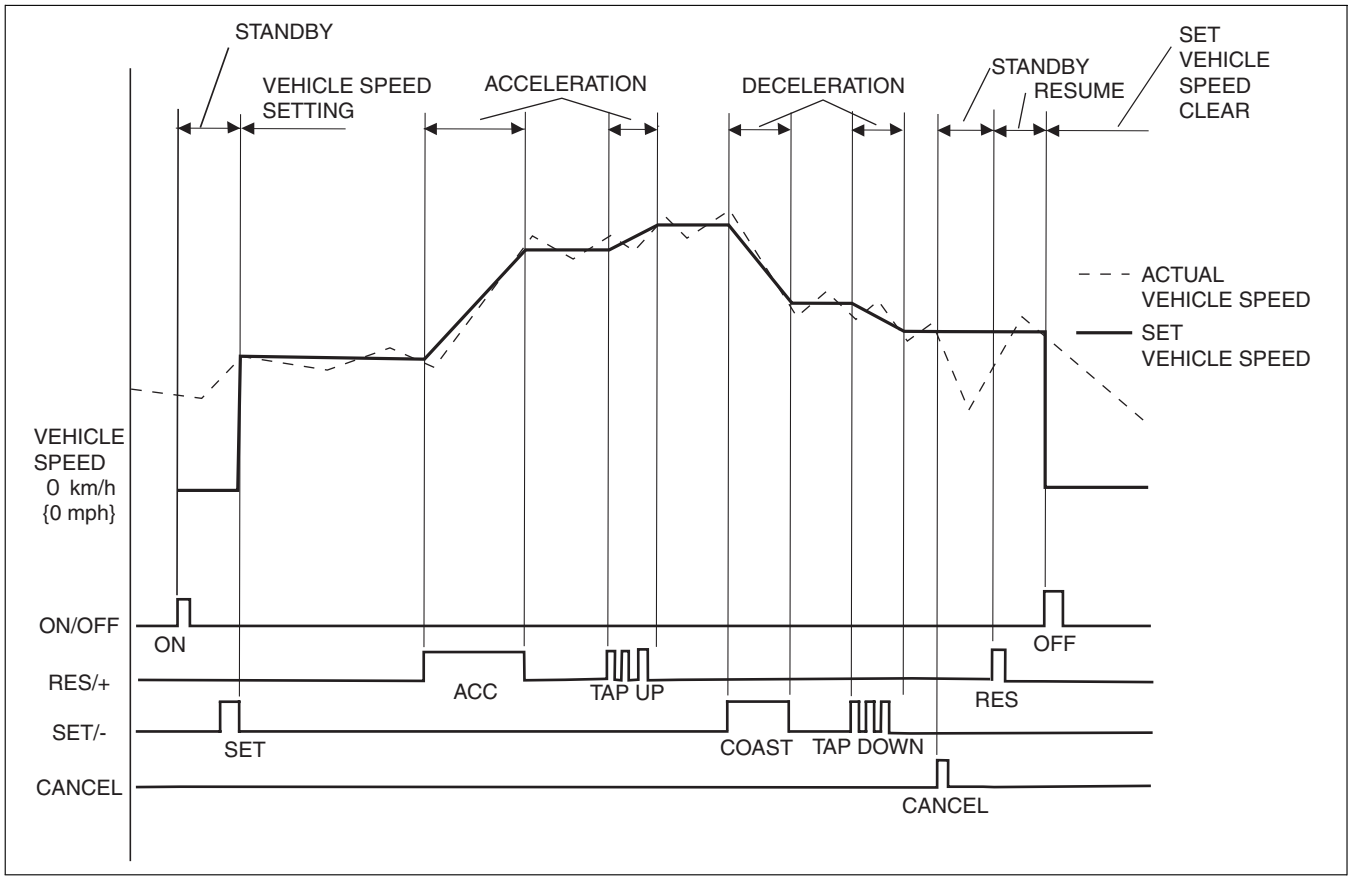

ar8uun00000229

- The cruise control includes the cruise control operation condition and the cruise control stop condition.

Cruise control operation condition

- When all of the following conditions are met, execution of the cruise control system is enabled (cruise control standby status).
  - — Cruise control main switch: ON
  - — Vehicle speed: Exceeds 27 km/h {17 mph}

Cruise control stop condition

- When any of the following conditions are met even while in cruise control, the PCM stops the cruise control and clears the set vehicle speed.
  - — Ignition switch: OFF
  - — Cruise control main switch: OFF
  - — Cruise control related DTCs (P0564, P0571) detected
- When any of the following conditions are met even while in cruise control, the PCM stops the cruise control while storing the set vehicle speed.
  - — Cancel switch: ON
  - — Neutral switch (MT) or CPP switch (MT): ON
  - — Inhibitor switch (AT) P/N position switch: ON
  - — Vehicle speed: Less than 22.5 km/h {14.0 mph}
  - — Brake switch: ON
  - — The actual vehicle speed is 15 km/h {9.3 mph} or more lower than the set vehicle speed during cruise control (ascending).
  - — Condition where actual vehicle speed is 15 km/h {9.3 mph} or more lower than the set vehicle speed continues for 60 s or more even when the RES (+) switch is on.

Cruise control function

- The cruise control includes accelerating, coasting, resume, tap-down, tap-up and downshift functions (AT).

Function List

Function	Contents
Accelerating	• When any of the following conditions are met while driving in cruise control and when the RES (+) switch is continuously pressed, the PCM gradually increases the set vehicle speed. — Except during resume operation — The RES (+) switch is on one time or more during resume operation.
Coasting	• When the SET (-) switch is continuously pressed, the PCM gradually decreases the set vehicle speed.
Resume	• When the RES (+) switch signal is input to the PCM during regular driving (cruise control is stopped) and the previously set vehicle speed is stored in the PCM, the PCM sets the set vehicle speed to the previously set vehicle speed and begins control.
Tap down	• When all of the following conditions are met while driving in cruise control, the PCM decreases the set vehicle speed by 1.6 km/h {0.99 mph} and controls the throttle valve actuator. — During cruise control — RES (+) switch off — The RES (+) switch switches from off to on — When actual vehicle speed is lower (set vehicle speed –2 km/h {-1.2 mph})
Tap-up	• When all of the following conditions are met, the PCM increases the set vehicle speed by 1.6 km/h {0.99 mph} and controls the throttle valve actuator so that the vehicle speed is close to the set vehicle speed. — During cruise control — The RES (+) switch switches from off to on
Downshift (AT)	• When the following conditions are met, a downshift signal is sent to the TCM via CAN. — RES (+) switch on — Target vehicle acceleration is not reached

Vehicle Speed Limiter (AT)

- When the actual vehicle speed exceeds 200 km/h {124 mph}, the vehicle speed limiter controls the throttle valve actuator so that vehicle speed is maintained at 200 km/h {124 mph} or less. It also reduces shock when the vehicle speed reaches 200 km/h {124 mph} and prevents rapid temperature increase of the catalytic converter during high speed.

SEQUENTIAL DYNAMIC AIR INTAKE SYSTEM (S-DAIS) CONTROL OUTLINE [13B-MSP]

id0140g1304000

- Operates the SSV solenoid valve, the APV motor, the VDI solenoid valve (13B-MSP (high power)), and the VFAD solenoid valve (with VFAD) according to the engine speed range. As a result, torque and output at all engine speed ranges have been improved.

SEQUENTIAL DYNAMIC AIR INTAKE SYSTEM (S-DAIS) CONTROL BLOCK DIAGRAM [13B-MSP]

id0140g1304100

- The PCM determines the engine conditions based on each input signal and sends signals to the SSV solenoid valve, the APV motor, the VDI solenoid valve (13B-MSP (high power)), and the VFAD solenoid valve (with VFAD).

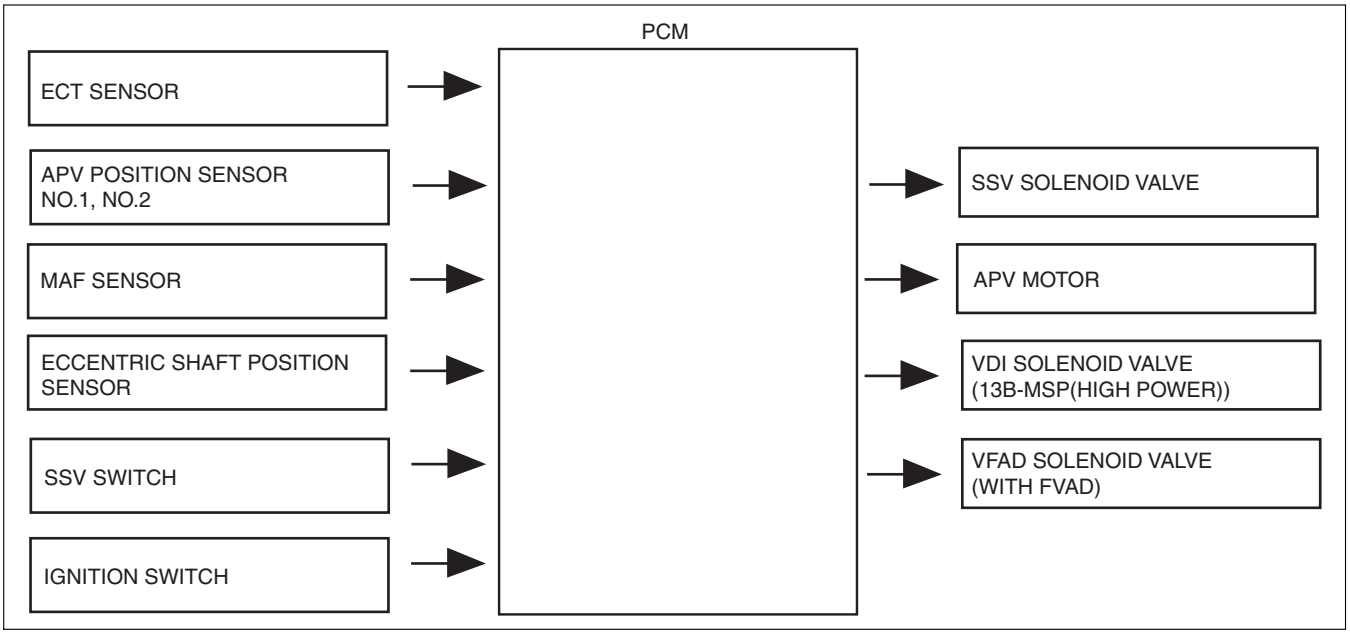

ar8uun00000339

SEQUENTIAL DYNAMIC AIR INTAKE SYSTEM (S-DAIS) CONTROL OPERATION [13B-MSP]

id0140g1304200

Operation Outline

- Operates the SSV solenoid valve, the APV motor, the VFAD solenoid valve (with VFAD), and the VDI solenoid valve according to the engine speed range.

Operation list

Engine speed range and operation conditions for each valve

On: Energization, Off: Non-energization, Open: Valve opens, Closed: Valve closes

Item		Engine speed range			
		Low speed	Medium speed	Medium-high speed	High speed
SSV	Solenoid valve	OFF	ON (Secondary injector is operating)		
	Valve	Closed	Open		
VFAD	Solenoid valve	OFF		ON (Approx. 5,250 rpm or more)	
	Valve	Closed		Open	
APV	Motor	OFF			ON (Approx. 6,250 rpm or more)
	Valve	Closed			Open
VDI	Solenoid valve	OFF			ON
	Valve	Closed			Open

Operation

SSV solenoid valve

- Turns on at the same time as the injection timing of the secondary injector. Due to this, the intake manifold vacuum is fed to the SSV actuator allowing intake air from secondary port which is opened by the SSV valve.

VFAD solenoid valve (with VFAD)

- At an engine speed of less than 5,250 rpm, the VFAD solenoid valve turns off and feeds intake manifold vacuum to the actuator (valve closes).
- At an engine speed of 5,250 rpm or more, the VFAD solenoid valve turns on and feeds BARO to the actuator (valve opens).

APV motor

- When the following conditions are met, a duty signal is sent to the APV motor, the APV gradually opens. If an APV-open condition is not met, a minus duty signal is sent to the APV motor, reversing the motor and closing the APV.

  APV-open condition

  — Engine speed: 6,250 rpm or more
  — ECT: Approx. 70 °C {158 °F} or more

VDI solenoid valve (13B-MSP (high power))

- At an engine speed of 7,650 rpm or more, the VDI solenoid valve turns off and feeds intake manifold vacuum to the actuator (valve opens).

FUEL INJECTION CONTROL OUTLINE [13B-MSP]

id0140g1101700

- The fuel injection control includes the following:
  — synchronized injection control, which performs fuel injection at the rotor intake stroke according to designated timing.
  — non-synchronized injection control, which performs fuel injection only when fuel injection conditions are met regardless of rotor intake stroke.
  — Fuel cut control, which temporarily stops fuel injection.
- There are primary, secondary fuel injectors, and the injection timing and injection amount varies according to the engine speed range. Due to this, the optimum amount of fuel injection is controlled at all ranges.

FUEL INJECTION CONTROL BLOCK DIAGRAM [13B-MSP]

id0140g1101800

- The PCM determines the engine operation conditions based on input signals and operates the injectors to inject fuel with the optimum fuel injection timing and fuel injection time (fuel injection amount).

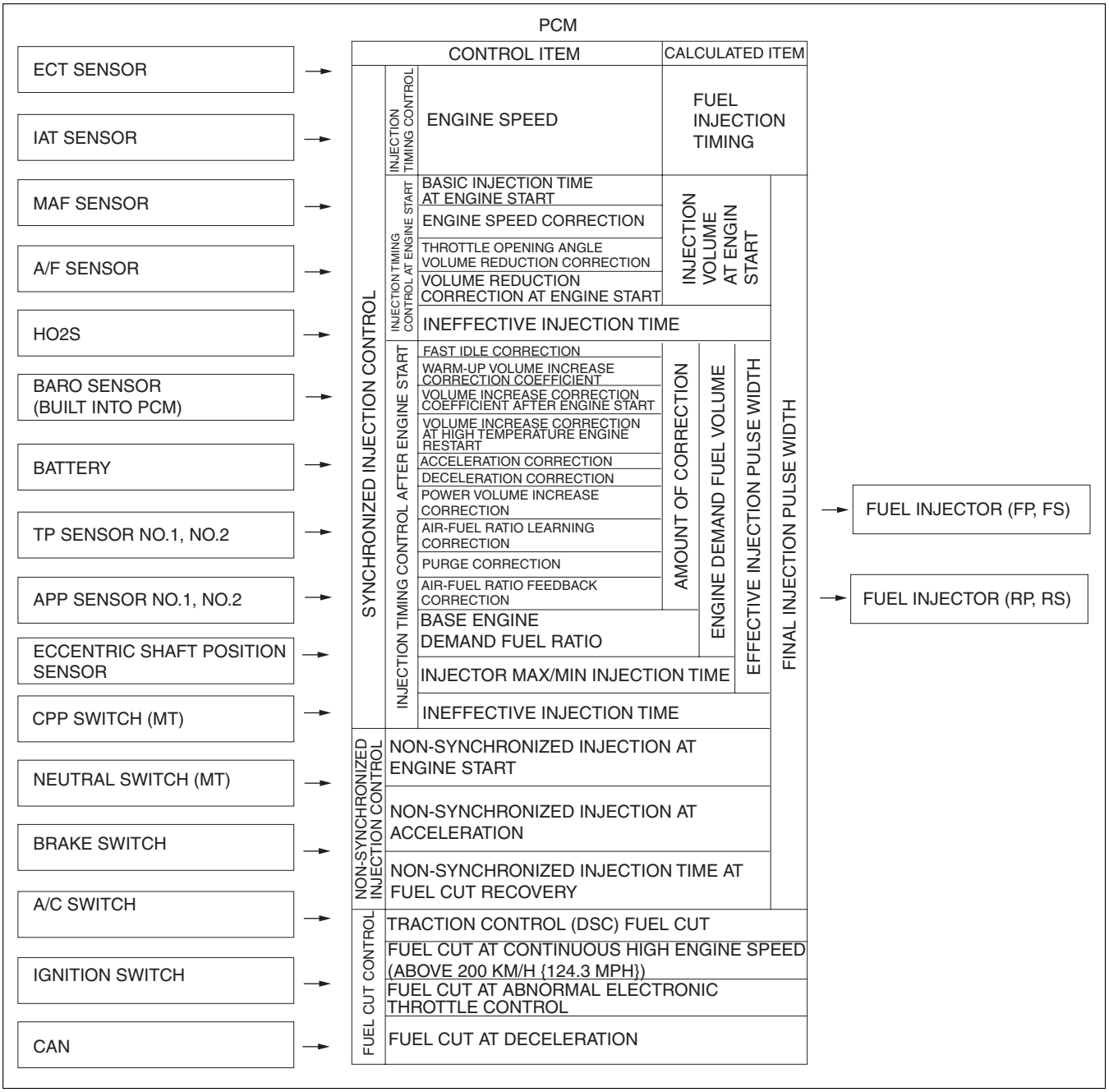

ar8uun00000340

FUEL INJECTION CONTROL OPERATION [13B-MSP]

id0140g1101900

Fuel Injection Timing

- The PCM calculates the optimum fuel injection timing according to the engine operation conditions and operates the injectors.
- The fuel injection timing is controlled at engine start and after engine start.
- At engine start (engine speed is within 500 rpm), fuel injection timing control at engine start is performed and after determining that the engine has started (engine speed is 500 rpm or more), injection timing control after engine start is performed.

  Fuel injection timing at engine start

  — The injection timing at engine start operates for a period until engine start has been determined and injects at BTDC 455°CA (crank angle position).

Fuel injection timing after engine start

— The injection start position of the fuel injection timing after engine start is determined by the injection end position and the final injection pulse width (injection time).
— The injection start position is calculated by: (Injection start position = BTDC 275°CA + Injection end position + Final injection pulse width).
— The injection end position is determined by the engine speed. (The higher the engine speed the lower the fuel injection timing.)

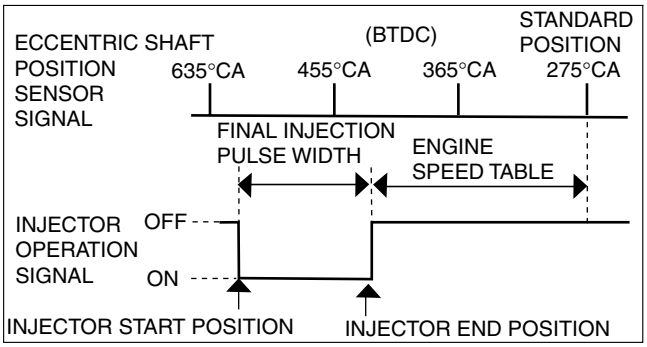

ar8uun00000193

Engine speed table

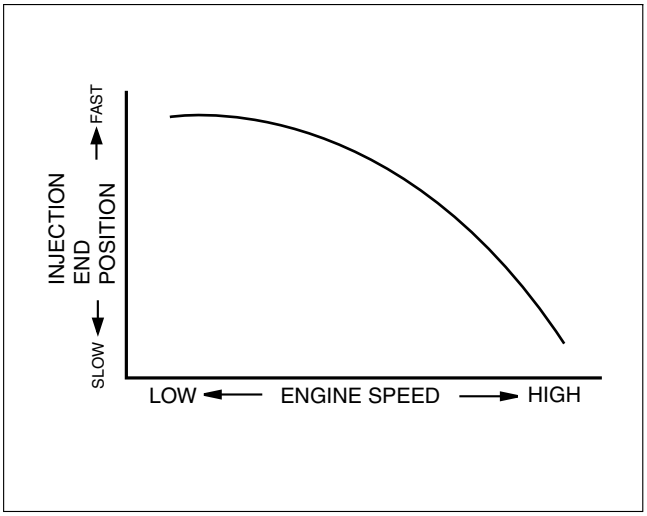

ar8uun00000194

Air/fuel Ratio Control

- Controls the fuel injection amount so that the actual air/fuel ratio is close to the target air/fuel ratio, to boost purification of the catalytic converter.
- air/fuel ratio feedback and target air/fuel ratio feedback are adopted for precise control of the air/fuel ratio.
- The air/fuel ratio feedback compares the air/fuel ratio in the exhaust manifold detected by the A/F sensor and the target air/fuel, and feeds back the air/fuel ratio difference to the final fuel pulse width (fuel injection amount).
- The target air/fuel ratio feedback compares the air/fuel ratio in the catalytic converter detected by the HO2S with the target air/fuel ratio and feeds back the air/fuel ratio difference to the stoichiometric air/fuel ratio (λ = 1). Due to this, the optimum target air/fuel ratio is determined.
- Repeats feedback to the target air/fuel ratio and final fuel pulse width (fuel injection amount), and by constantly calculating the optimum target air/fuel ratio and final fuel pulse width, purification of the catalytic converter at a high level has been achieved.

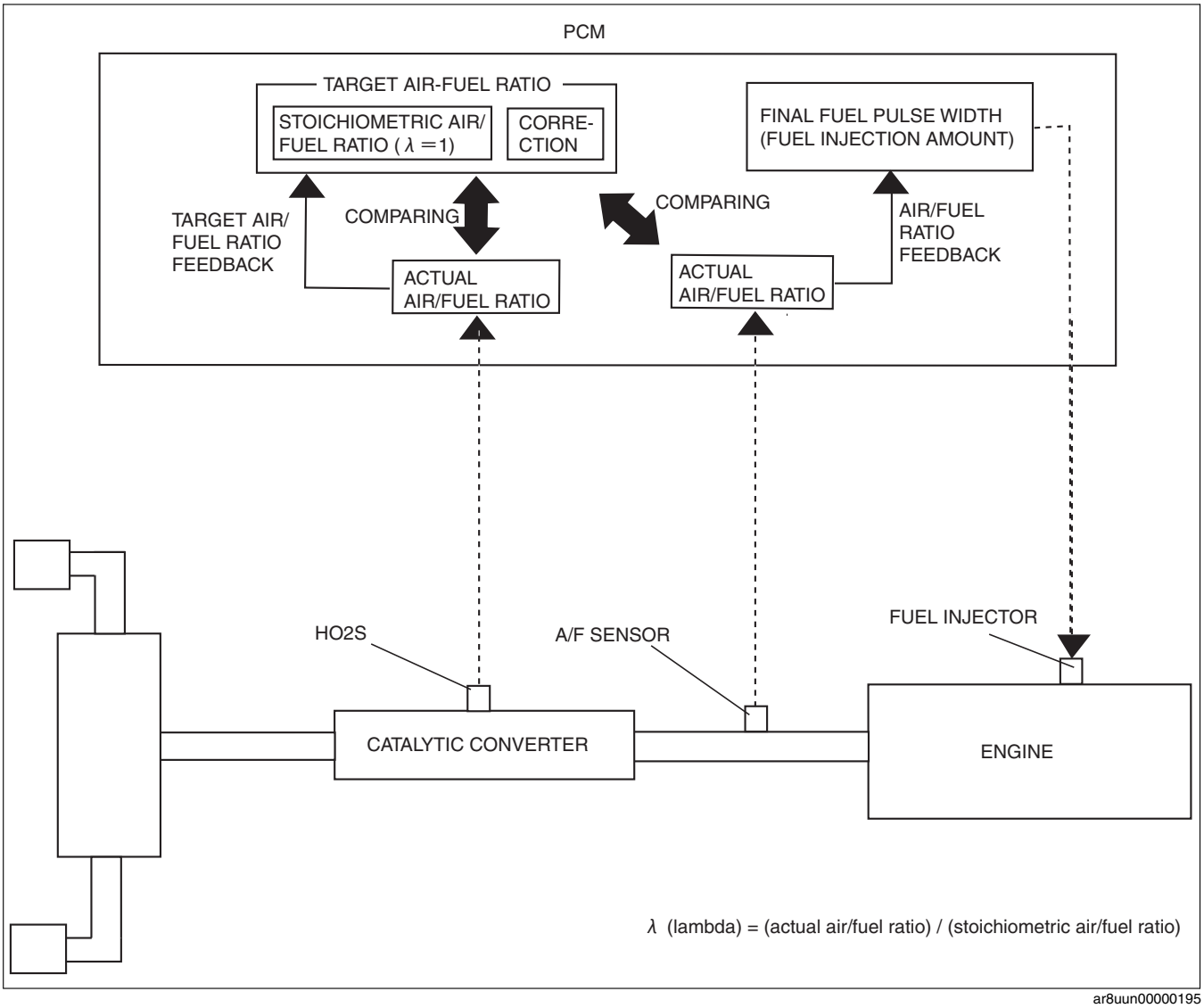

ar8uun00000195

Fuel Injection Distribution Control

- There are primary, secondary injectors, and they independently control fuel injection amount and timing according to the amount of fuel demand from the engine.
- The amount of fuel demand from the engine is determined by each correction of the charging efficiency and injection time after engine start.
- When the amount of fuel demand from the engine is low, only the primary injectors inject fuel. When the amount of fuel demand from the engine increases, fuel injection in the order of secondary injector begin injection.

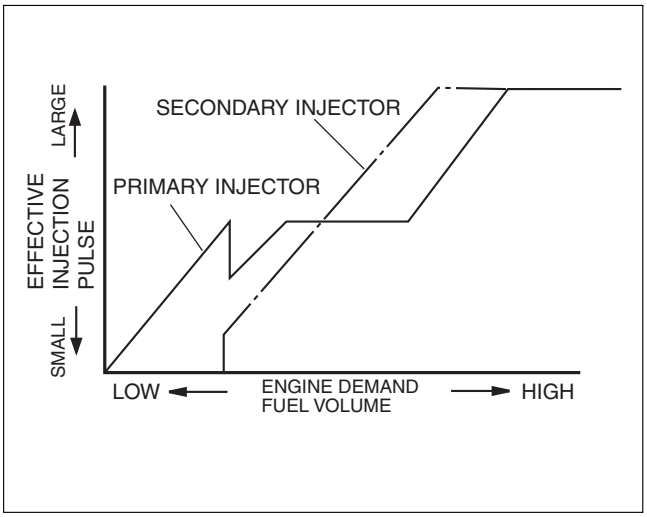

ar8uun00000196

Synchronized Injection Control

- The synchronized injection control performs fuel injection according to each timing that has been determined by the intake stroke of the rotors.
- The synchronized injection control includes fuel injection control at engine start and fuel injection control after engine start. Synchronized injection control performs fuel injection based on injection time (final injection pulse width) and fuel injection timing demanded by each rotor.

Injection time at start

- Calculated by adding the engine speed correction to the basic injection time at engine start, the throttle valve opening angle correction, and the volume decrease correction at engine start, and then the final injection pulse width is calculated by adding the ineffective injection time to the injection time at engine start.
- Basic injection time at engine start is determined based on ECT and shortens as the ECT increases.
- Ineffective injection time is determined according to battery voltage and lengthens as battery voltage becomes lower.

Correction	Condition	Amount of Correction
Engine speed correction	Determines correction amount based on engine speed.	• Correction amount lengthens as the engine speed increases.
Throttle valve opening angle correction	Determines correction amount based on throttle valve opening angle.	• Correction amount shortens as the throttle valve opening angle increases.
Volume decrease correction at engine start	Determines correction amount based on ECT and engine speed at engine start.	• After starter is on for approx. 1 s and any one of the following conditions are met, injection time gradually decreases: — ECT at fixed value or more — Engine speed at target engine speed or more — Approx. 30 s of cranking time elapsed

Injection time after engine start

- The injection time after engine start is calculated from the charging efficiency, ineffective injection time and each type of correction.

  Charging efficiency

  — The charging efficiency is the ratio of intake air amount that is actually taken in relation to the maximum air charging amount (mass) of the operation chamber. This value becomes larger in proportion to the increase in engine load.

  Ineffective injection time

  — Ineffective injection time at engine start is determined according to the battery voltage and lengthens as the battery voltage becomes lower.

Each type of correction

— Includes the following corrections:

Fast idle correction

- Determines the correction amount when the secondary air injection system operates to rapidly heat the catalytic converter. The correction amount is determined by estimating the air amount that is sent from the secondary air injection pump based on the BARO, battery positive voltage, IAT, charging efficiency and the engine speed, and by calculating the target air/fuel ratio.

Warm-up volume increase correction coefficient

- At cold-engine start, warm-up is accelerated by advanced vaporization and atomization. The warm-up volume increase correction coefficient is determined by the ECT, water temperature at engine start, charging efficiency, and the engine speed.

Volume increase correction coefficient after start coefficient

- The volume increase correction coefficient after engine start coefficient is determined by the ECT and IAT at engine start, the time elapsed, and fuel-cut conditions after engine start.

High temperature volume increase correction at engine restart

- At high temperature engine restart, increased fuel volume correction is performed to prevent fluctuations in idle speed based on the occurrence of vapor in the fuel pipe. The correction amount is determined by the IAT and the ECT.

Acceleration correction

- Improves engine response during acceleration. The correction amount is determined by the rate of charging efficiency increase, throttle valve opening angle, engine speed, volume increase after engine start, time after engine start, and the ECT.

Deceleration correction

- Stops afterburn within the ranges fuel cut does not operate during deceleration. The correction amount is determined by the rate of charging efficiency decrease, throttle valve opening angle, engine speed, volume increase after engine start, time after engine start, and the ECT.

Power increase correction

- Volume increase correction is performed to improve output during high load and to inhibit overheating of the catalytic converter. The correction amount is determined by the throttle opening angle, charging efficiency, engine speed, volume increase after engine start, ECT, gear position (MT: determined by engine speed and vehicle speed, AT: determined by signal from the TCM), and BARO.

Fuel learning correction

- Learns the difference between the target air/fuel ratio and the actual air/fuel ratio (A/F sensor).

Purge correction

- Performs volume decrease correction of the fuel amount for the portion of evaporative fuel inflowing from the charcoal canister. The correction amount is determined by calculating the fuel amount inflowing from the charcoal canister caused by the amount of change in air/fuel ratio feedback during activation of the evaporative purge control.

Fuel feedback correction

- Detects the air/fuel ratio in the exhaust manifold at the A/F sensor and feeds back to the final injection pulse width (final fuel injection amount).
- Fuel feedback begins when all of the following conditions are met:
  ECT is 32°C {90°F} or more.
  After the engine has started and 3—100 s have elapsed (time period after engine-start lengthens as ECT becomes lower).
  -Power volume increase correction
  -During fuel cut recovery, non synchronized injection control stops.
  -Traction correction retard stops.
  -Fast idle correction stops.
  -During activation of A/F sensor.

Non-synchronized Injection Control

- The non-synchronized injection control allows fuel injection when fuel injection conditions are met, regardless of the position of the eccentric shaft.
- The non-synchronized injection control includes non-synchronized injection control at engine start, acceleration, idle, and fuel cut recovery.

Control name	Purpose	Injection condition
Non-synchronized injection control at engine start	Improves engine startability.	• Performs non-synchronized fuel injection at engine start until determining the engine has been started (engine speed 500 rpm or more). • Injection pulse width at engine start is calculated by adding the injection amount at engine start calculated from the following signals to the ineffective injection time: — ECT — Throttle valve opening angle
Non-synchronized injection control at acceleration	Prevents acceleration hesitation and lean air/fuel ratio due to delay of fuel injection during sudden acceleration.	• Performs non-synchronized fuel injection when the amount of throttle valve change is at the fixed value or more for both rotors simultaneously. • Injection pulse width is calculated from the following signals: — Charging efficiency — Throttle valve opening angle — Engine speed — ECT
Non-synchronized injection control at fuel cut recovery	Prevents engine hesitation and lean air/fuel ratio due to the delay of fuel injection during fuel cut recovery.	• Performs non-synchronized fuel injection during fuel cut recovery. • Injection time is determined by ECT.

Fuel Cut Control

- The fuel cut control stops fuel injection when the fuel cut conditions are met.
- The fuel cut control includes traction fuel cut control, continuous fuel cut control during high engine speed, fuel cut control during drive-by-wire abnormality, fuel cut control during deceleration, dechoke control, and excessive speed fuel cut control.

Note

- AT vehicles: If the engine speed reaches the excessive speed fuel cut condition with the shift lever in the M range, fuel cut and supply occur repeatedly to warn the driver that the engine speed is too high. Moreover, if the engine speed is not lowered, the engine speed is lowered by a forced shift up of the gear to protect the engine.
- MT vehicles: If the engine speed reaches the excessive speed fuel cut condition, the fuel is cut to protect the engine. Moreover, if the engine speed is not lowered, fuel cut and supply occur repeatedly to warn the driver that the engine speed is too high.

Control name	Purpose	Fuel cut condition
Traction fuel cut control	Lowers engine torque based on the torque down request from DSC HU/CM and TCM (AT).	Performs fuel cut based on torque down request from DSC HU/CM and TCM (AT).
Continuous speed fuel cut control during high engine speed	Prevents overheating of the catalytic converter.	Performs fuel cut during continuous high engine speed while vehicle is stopped.
Fuel cut control during drive-by-wire abnormality	When there is a malfunction in the drive-by-wire, fuel cut is activated and excess increase in engine speed is prevented.	Fuel cut is performed in case of a drive-by-wire control malfunction which may lead to a sudden increase in engine speed.
Fuel cut control during deceleration	Prevents overheating of the catalytic converter due to misfire for improved fuel economy. Performs fuel cut on one rotor for reduced deceleration shock.	Performs fuel cut on one rotor when the throttle valve is open during deceleration. Performs fuel cut on both front and rear rotors when throttle valve is fully closed.
Dechoke control	Scavenges operation chambers to improve engine startability if the spark plugs are smoldered.	Dechoke control is performed when the throttle valve opening angle is 50 degrees or more at engine start.

Control name	Purpose	Fuel cut condition
Excessive speed fuel cut control	Prevents overheating of the engine.	• When ECT is less than 40 °C {104 °F}: the engine speed is 5,000 rpm or more. **Standard power** • When ECT is 40 °C {104 °F} or more: the engine speed is 6,500 rpm or more. • When engine speed is 7,500 rpm or more. **High power** • When ECT is 40 °C {104 °F} or more: the engine speed is 7,000 rpm or more. • When engine speed is 9,000 rpm or more.

METERING OIL PUMP CONTROL OUTLINE [13B-MSP]

id0140g1304500

- The PCM operates metering oil pumps No.1 and No.2 by operating the metering oil pump driver according to the engine operation conditions.
- The metering oil pump driver receives drive signals from the PCM to switch the internal ground and supply battery voltage to metering oil pumps No.1 and No.2.
- The PCM determines the engine operation conditions based on the signals from the input parts and controls the metering oil pump driver at the optimal timing to operate the metering oil pump. For the construction/operation of metering oil pumps No.1 and No.2, refer to “LUBRICATION SYSTEM, METERING OIL PUMP, CONSTRUCTION/OPERATION. (See 01-11-5 METERING OIL PUMPCONSTRUCTION/OPERATION [13B-MSP].)

METERING OIL PUMP CONTROL BLOCK DIAGRAM [13B-MSP]

id0140g1304400

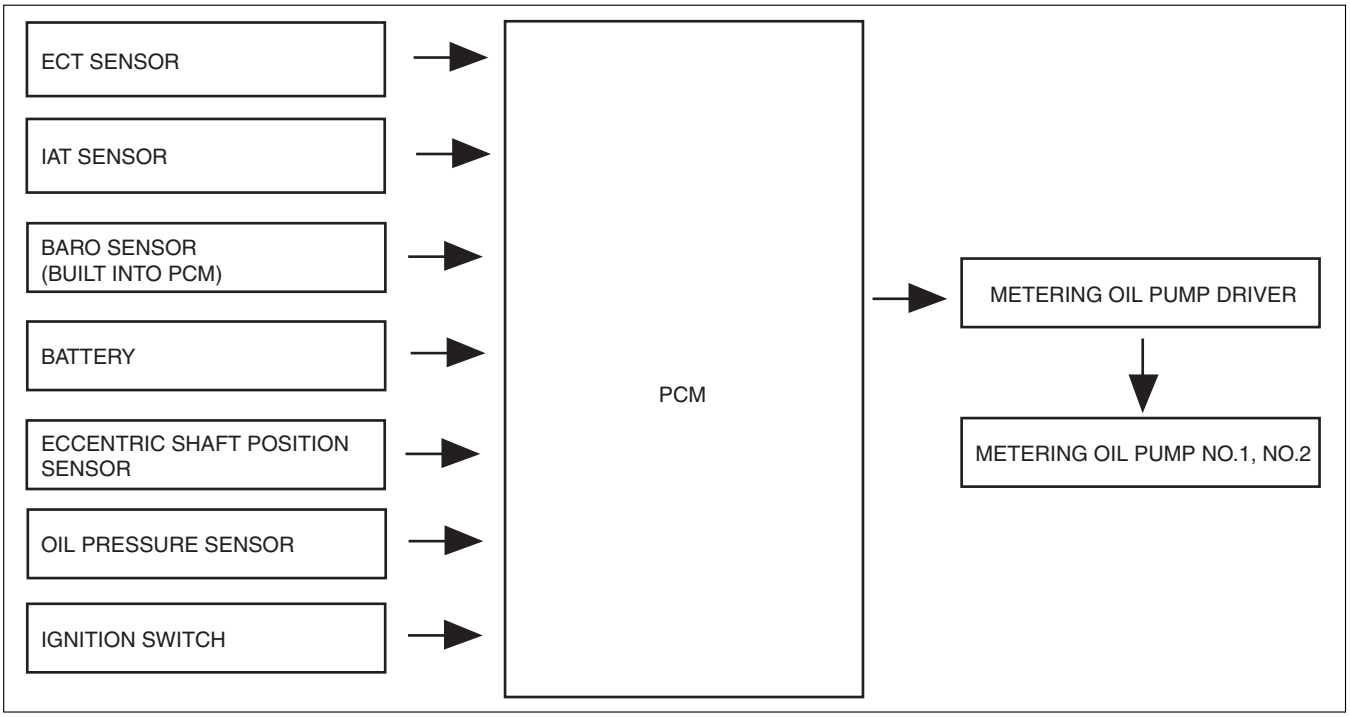

ar8uun00000364

METERING OIL PUMP CONTROL OPERATION [13B-MSP]

id0140g1304300

Outline

- The PCM moves the plunger in metering oil pumps No.1 and No.2 to discharge the engine oil by controlling the metering oil pump driver. Two types of metering oil pumps are utilized separately and the discharge amount is adjusted based on the stroke intervals of the plunger to realize precise control of the flow amount according to engine demand.

Operation timing

- The PCM calculates the oil level required by the engine according to the engine operation conditions. When the calculated value reaches the discharge amount, a drive signal is sent to the metering oil pump driver and the metering oil pump operates (ON/OFF) to discharge oil.

  Demand-oil amount

  — The demand-oil amount is determined for metering oil pumps No.1 and No.2 respectively.

  — The base flow amount, based on engine speed and engine load, is compared with the minimum flow amount, based on the engine coolant temperature and intake air temperature, and the larger of the two values is selected as the demand-oil amount.

  Discharge amount

  — The discharge amount is the oil amount injected from the center oil nozzle and side oil nozzles when metering oil pump No.1 or No.2 operates once.

  — The discharge amount is corrected according to battery positive voltage, the metering oil pump internal pressure, and engine coolant temperature.

Ignition switch off function

- Engine startability at cold temperatures is improved by discharging engine oil while the ignition is switched off.
- If the engine is started with the coolant temperature lower than 20 °C {68 °F} and the ignition is switched off with the coolant temperature lower than 60 °C {140 °F}, the PCM calculates the necessary oil amount based on the coolant temperature. The PCM controls the metering oil pump driver until the engine rotation is completely stopped.

OIL PRESSURE CONTROL OUTLINE [13B-MSP]

id0140g1304600

- The amount of oil supplied to the metering oil pump is adjusted based on the engine operation conditions to keep the oil pressure inside the metering oil pump constant.
- Based on the input signals from the oil pressure sensor, the PCM drives the OCV and switches the oil passages of the metering oil pump so that the oil pressure inside the metering oil pump is kept constant.

OIL PRESSURE CONTROL BLOCK DIAGRAM [13B-MSP]

id0140g1304700

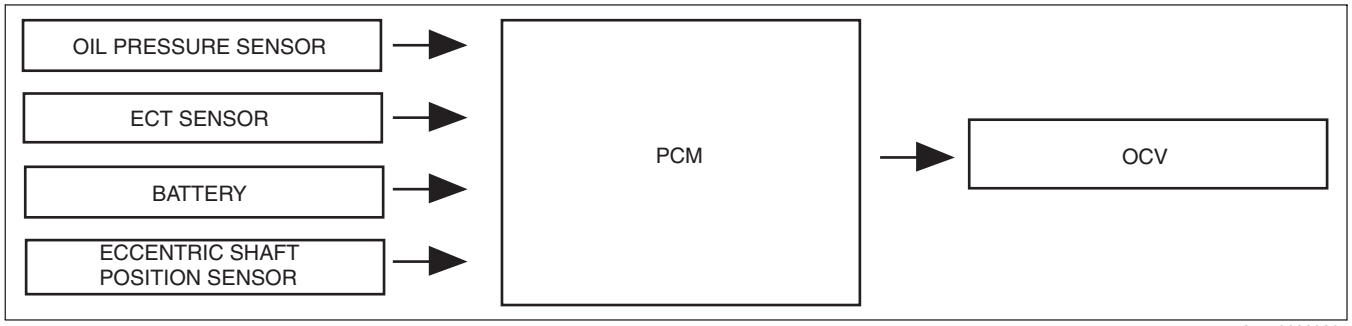

ar8uun00000365

OIL PRESSURE CONTROL OPERATION [13B-MSP]

id0140g1304800

Operation

- The PCM divides the oil control valve drive range into four modes according to the engine operation conditions and controls the target current for each control zone.

Engine start mode

- This mode opens the passage between the OCV and metering oil pump to feed oil into the metering oil pump at an early stage. After oil-feed into the metering oil pump is detected based on the input signals from the oil pressure sensor, the mode changes to the feedback mode.

Feedback mode

- The PCM controls the OCV target current so that the actual oil pressure in the metering oil pump is close to the target value determined according to the engine operation conditions.

Cleaning mode

- If any of the following conditions are met, this mode is executed to remove foreign material in the OCV oil passages:
  - — Engine start mode is completed.
  - — The oil pressure input from the oil pressure sensor remains at a certain value or more after a specified time has elapsed since the engine was started.
    Operation
    - The OCV alternately controls the target current between low and high levels at certain intervals. After repeating this operation several times, foreign material that has penetrated the OCV is removed and the cleaning mode is completed.
  - — The oil pressure input from the oil pressure sensor remains at a certain value or less after a specified time has elapsed since the engine was started.
    Operation
    - Because there may be an oil leakage concern from the pipes, the passage between the OCV and metering oil pump is closed so that oil-feed into the metering oil pump stops.

Periodic cleaning mode

- This mode performs at specified time intervals to remove foreign material in the OCV oil passages. (except during high engine speed, high engine load)

Operation

- The OCV controls the target current on the lower side for a specified period of time. After executing this operation one time, foreign material penetrating the OCV is removed and the periodic cleaning mode is completed.

AIR FUEL RATIO (A/F) SENSOR, HEATED OXYGEN SENSOR (HO2S) HEATER CONTROL OUTLINE [13B-MSP]

id0140g1782000

- Stabilized oxygen concentrations, even when the exhaust gas temperature is low, are detected by controlling of the A/F sensor and HO2S, enabling feedback control of the fuel injection control even during cold-engine starting, improving emission performance when cold.
- When the exhaust gas temperature is high, the A/F sensor and HO2S is protected from sharp rises in its temperature by stopping energization to the A/F sensor heater and HO2S heater.
- Emission performance improvement and protection of the A/F sensor and HO2S have both been achieved by the duty control of the A/F sensor and HO2S according to the engine operation conditions (exhaust gas temperature).

AIR FUEL RATIO (A/F) SENSOR, HEATED OXYGEN SENSOR (HO2S) HEATER CONTROL BLOCK DIAGRAM [13B-MSP]

id0140g1782100

- The PCM determines the engine conditions based on input signals and sends an operation signal to the A/F sensor or HO2S.

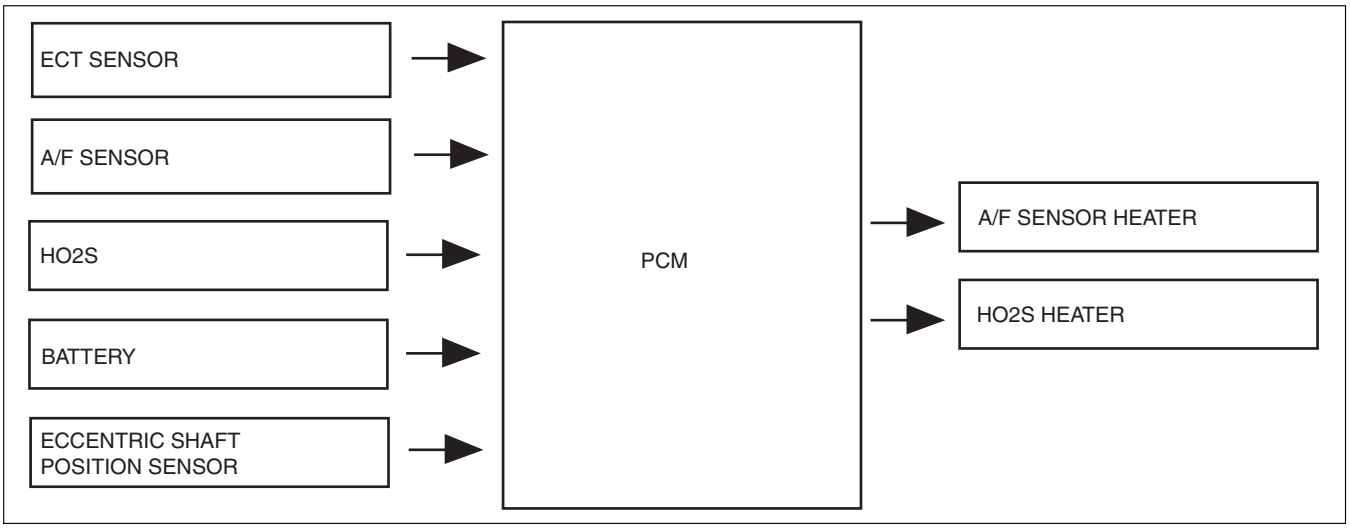

ar8uun00000215

AIR FUEL RATIO (A/F) SENSOR, HEATED OXYGEN SENSOR (HO2S) HEATER CONTROL OPERATION [13B-MSP]

id0140g1782200

Operation Conditions

- The PCM operates the A/F sensor or HO2S heater when the following conditions are met.

A/F sensor heater

• After engine start • After the engine has started and a fixed period of time has elapsed (the elapsed time period after the engine starts is determined by ECT). • ECT is 5°C {41°F} or more. • Battery positive voltage is 9 V or more and less than 16 V. • MAF sensor is normal (no DTC is stored in PCM).	• The PCM outputs a duty signal. • The element temperature is measured by the impedance of the A/F sensor and a duty ratio is determined.

HO2S heater

• Starter is off • After engine start • After the engine has started and a fixed period of time has elapsed (the time period after the engine starts lengthens if the ECT falls below 0°C {32°F}. • ECT is 10°C {50°F} or more. • Battery positive voltage is 9 V or more and less than 16 V. • Charging efficiency is the fixed value or less, or during fuel cut.	• The PCM outputs a duty signal. However the duty signal is either 100% or 0%.

ELECTRICAL FAN CONTROL OUTLINE [13B-MSP]

id0140g1103800

- Cooling fan relays No.1, No.2/ No.3, No.4/ No.5 turn on and off to control operation timing and rotation speed of the cooling fan motor according to the engine conditions. Due to this, the radiator and condenser are cooled efficiently, preventing overheating and overcooling.
- The electrical fan control includes the regular-driving cooling function and the after-cooling function.
- The regular-driving cooling function operates according to the engine conditions during the engine operation.
- The after-cooling function operates when the vehicle has stopped at high engine temperature (ignition switch off).
- After the ignition switch is turned off, a main relay on request is sent to operate the after-cooling function.

ELECTRICAL FAN CONTROL BLOCK DIAGRAM [13B-MSP]

id0140g1103900

- The PCM determines the engine conditions based on input signals and sends an on/off signal to cooling fan relay No.1 or No.2/No.3 or No.4/No.5.

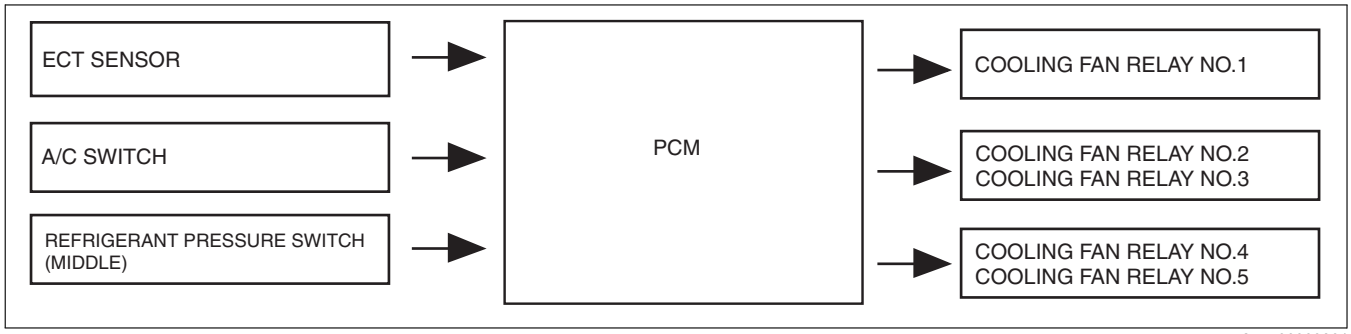

ar8uun00000201

ELECTRICAL FAN CONTROL OPERATION [13B-MSP]

id0140g1104000

- When the operation conditions are met for each function, the PCM sends an operation signal to cooling fan relay No.1 or No.2/No.3 or No.4/No.5 to operate the cooling fan motors.
- The rotation speed of the cooling fan motor is switched between three levels according to a combination of the cooling fan relays.
- The cooling fan rotates at low speed when only cooling fan relay No.1 is on, at middle speed when cooling fans, in addition to No.1, No.2 and No.3 are on, and at high speed when cooling fans No.4 and No.5 turn on.

Operation condition

Function	Cooling fan motor		Cooling fan relay			Operation condition
	No.1	No.2	No.1	No.2/No.3	No.4/No.5	
Regular driving cooling	Stop	Stop	OFF	OFF	OFF	• ECT less than 97 °C {207 °F} and A/C switch OFF
	Low speed rotation	Low speed rotation	ON	OFF	OFF	• ECT less than 97 °C {207 °F} and A/C switch ON (Refrigerant pressure switch OFF) • ECT is 97—101 °C {207—213 °F} and Refrigerant pressure switch OFF
	Middle speed rotation	Middle speed rotation	ON	ON	OFF	• ECT is 101—108 °C {214—226 °F} • ECT less than 101 °C {214 °F} and Refrigerant pressure switch ON • ECT or above 108 °C {226 °F} and A/C switch ON (Refrigerant pressure switch OFF)
	High speed rotation	High speed rotation	ON	ON	ON	• ECT or above 108 °C {226 °F} and A/C switch OFF • ECT or above 108 °C {226 °F} and Refrigerant pressure switch ON
After cooling	Middle speed rotation	Middle speed rotation	ON	ON	OFF	• When all the following conditions are met: — Ignition switch: OFF — Drive-by-wire relay: OFF — Metering oil pump: Other than during ignition switch off mode — Engine compartment temperature high or ECT 110 °C {230 °F} or more.
Forced drive	High speed rotation	High speed rotation	ON	ON	ON	• During test mode (during test mode with M-MDS) when the AP is depressed.
Fail safe	High speed rotation	High speed rotation	ON	ON	ON	• When a failure occurs in the ECT sensor.

Wiring diagram

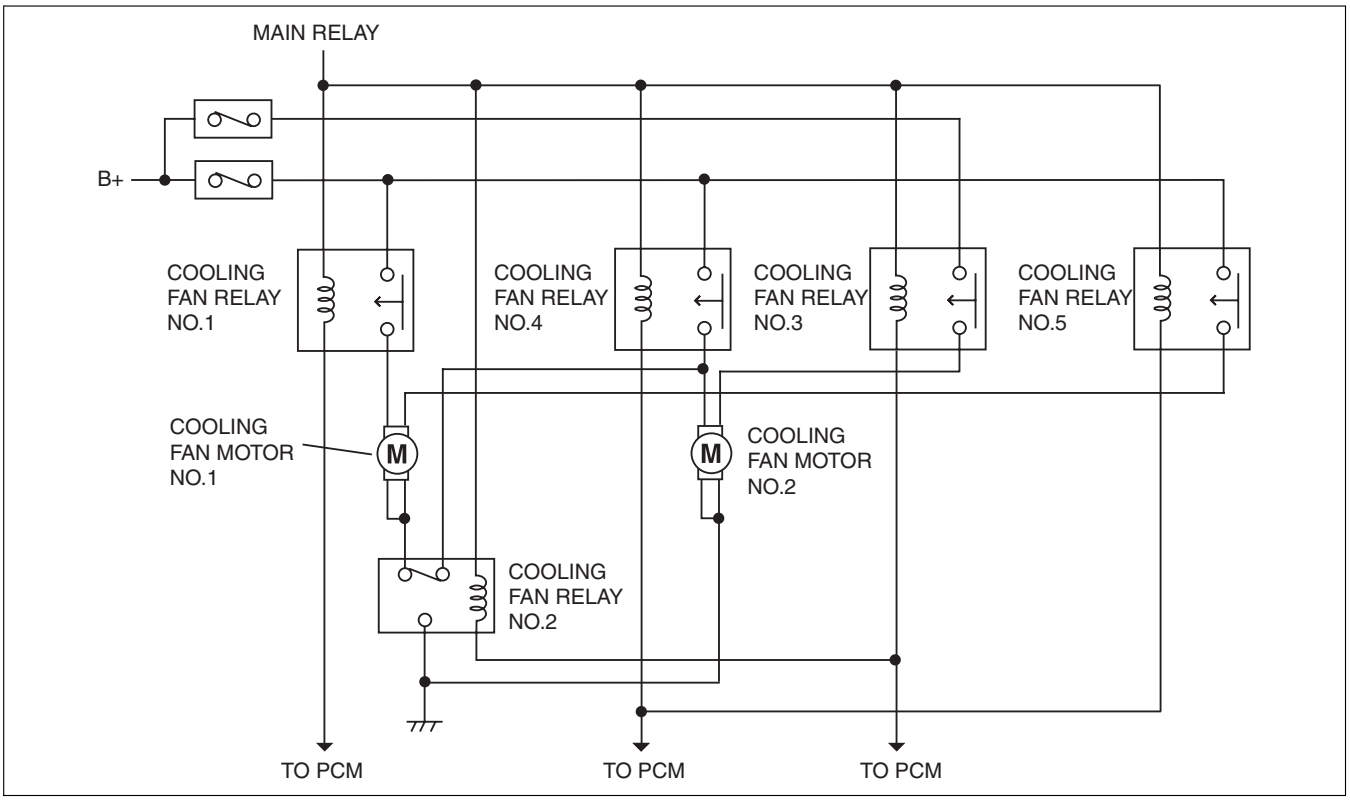

ar8uun00000341

PCM FUNCTION [13B-MSP]

id0140g1105300

Function List

- The control descriptions are as shown below.

Function	Description
Main relay control	Turns on the main relay according to requests from the controls, even when the ignition switch is off.
Drive-by-wire control	Controls the drive-by-wire actuator to obtain the optimum throttle valve opening angle according to the engine operation conditions.
Drive-by-wire relay control	Controls the drive-by-wire relay according to the ignition switch signal.
Sequential dynamic air intake system (S-DAIS) control	Controls the VFAD solenoid valve (with VFAD), SSV solenoid valve, VDI solenoid valve (13B-MSP(high power)), and APV motor according to the engine speed condition.
Fuel injection control	Calculates the optimum fuel injection amount according to the engine conditions, and controls injection time and injection timing of the injector.
Fuel pump control	Controls the fuel pump relay according to the eccentric shaft position sensor signal.
Fuel pump speed control	Controls fuel pump speed control relay according to the fuel amount required by the engine.
Ignition timing control	Controls timing of the energization applied to the ignition coils according to the engine conditions.
Secondary air injection control	Controls the secondary air injection solenoid valve and secondary air injection pump relay at startup with the cold engine.
Evaporative purge control	Controls the purge solenoid valve according to the driving condition.
Metering oil pump control	The metering oil pump driver receives drive signals from the PCM to switch the internal ground and supply battery voltage to metering oil pumps No.1 and No.2.
Oil pressure control	The amount of oil supplied to the metering oil pump is adjusted based on the engine operation conditions to keep the oil pressure inside the metering oil pump constant.
A/F sensor heater/ HO2S heater control	Controls the A/F sensor heater and HO2S heater when cold.
A/C cut-off control	Controls the A/C relay according to the driving condition.
Electrical fan control	Controls the cooling fan relays No.1 and No.2/No.3 and No.4/No.5 according to the engine conditions.
Starter cut-off control	Theft deterrence has been improved by controlling energization to the starter relay according to an engine stop request signal from the immobilizer system.
Generator control	Controls the energization applied to the generator field coil according to the engine operation and electrical load conditions.
CAN	The PCM sends and receives signals to and from the CAN system related modules via CAN.

PCM CONSTRUCTION/OPERATION [13B-MSP]

id0140g1105400

- Located in front area of the engine compartment.
- 120-pin connector is used for the PCM.

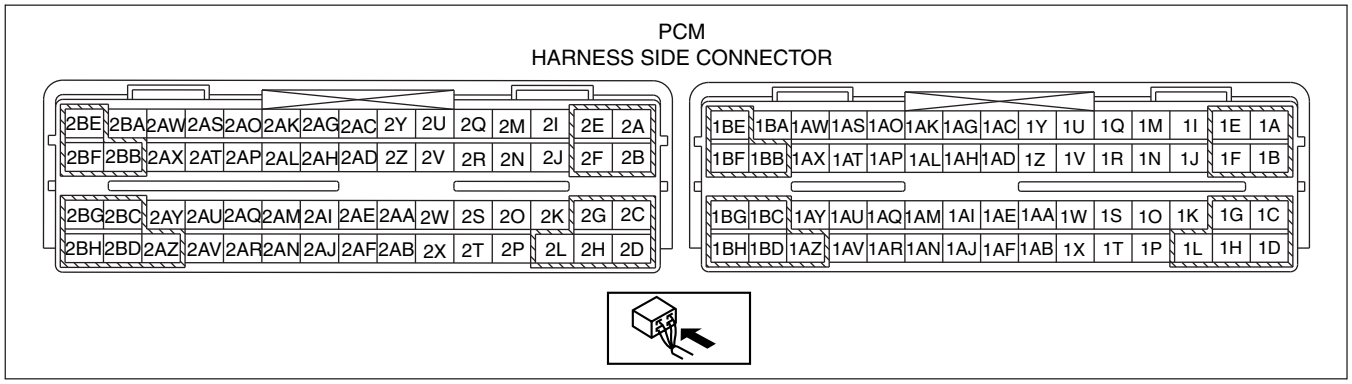

am6zzw00000123

AIR FUEL RATIO (A/F) SENSOR FUNCTION [13B-MSP]

id0140g1256000

- The wide-range air/fuel ratio sensor, which can linearly detect the oxygen concentration (air/fuel ratio of the air-fuel mixture) in the exhaust gas in all ranges, from lean to rich, is used on the A/F sensor.
- A heater has been adopted on the A/F sensor, allowing stable detection of the oxygen concentration even when the exhaust gas temperature is low.

AIR FUEL RATIO (A/F) SENSOR CONSTRUCTION/OPERATION [13B-MSP]

id0140g1256100

- Installed on the exhaust manifold.
- The wide-range air/fuel ratio sensor is a pump cell type sensor, using both the oxygen concentration cell action and oxygen pump cell action, and can detect the oxygen concentration (air/fuel ratio of the air-fuel mixture) in the exhaust gas in all ranges, from lean to rich.
- A heater is built into the sensor to facilitate the activation of the A/F sensor at engine startup (when the exhaust gas temperature is low).

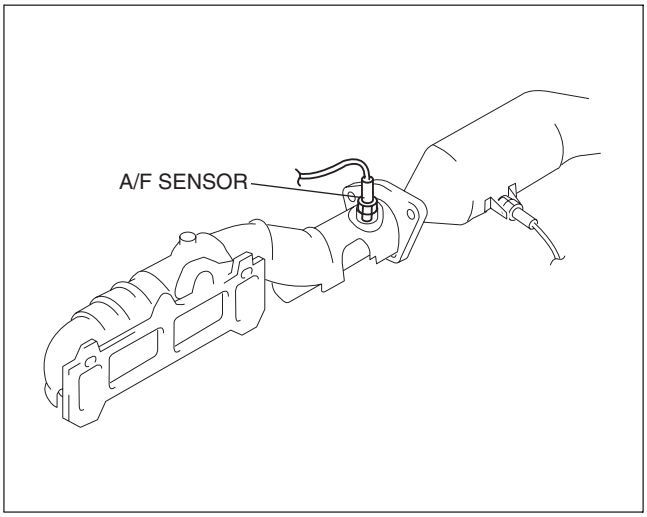

ar8uun00000251

Operation

- The wide-range air/fuel ratio sensor converts the oxygen concentration in the exhaust gas into a current value, and sends the value to the PCM.
- The PCM calculates the λ (lambda) value of the air-fuel mixture based on the received current value.
- (λ (lambda)) = (actual air/fuel ratio)/ (stoichiometric air/fuel ratio)

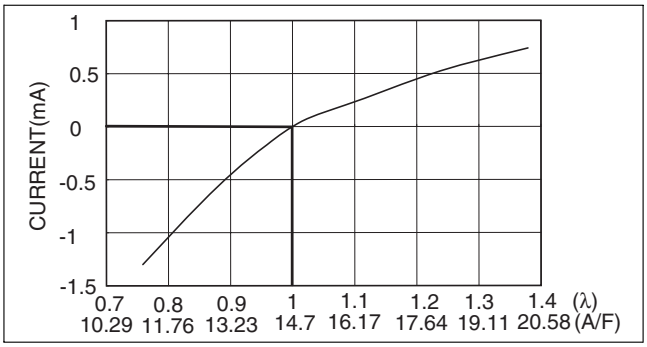

ar8uun00000214

HEATED OXYGEN SENSOR (HO2S) FUNCTION [13B-MSP]

id0140g1173700

- Detects the oxygen concentration in the exhaust gas.
- A heater has been adopted, allowing stable detection of the oxygen concentration even when the exhaust gas temperature is low.

HEATED OXYGEN SENSOR (HO2S) CONSTRUCTION/OPERATION [13B-MSP]

id0140g1173800

- Installed on the catalytic converter.
- A heater is built into the sensor to facilitate the activation of the HO2S at engine startup (when the exhaust gas temperature is low).
- A zirconium element is used on the sensor. When there is a difference between the oxygen concentration inside and outside the element, electromotive force is generated by the movement of oxygen ions (inside of the zirconium element: atmosphere, outside: exhaust gas). The electromotive force changes significantly at the boundary of the stoichiometric air/fuel ratio (A/F=14.7). The PCM receives the voltage generated from the HO2S directly, and increases or decreases the fuel injection amount by the fuel injection control so that it is close to the stoichiometric air/fuel ratio.

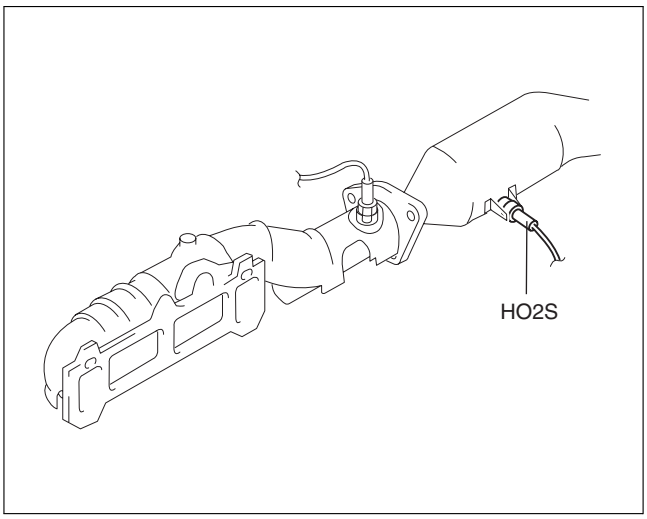

ar8uun00000252

- When the temperature of the zirconium element is low, electromotive force is not generated. Therefore the HO2S is heated by a built-in heater, facilitating the oxygen sensor activation. Due to this, the sensor is efficiently activated even immediately after cold-engine startup, and a stable sensor output can be obtained.

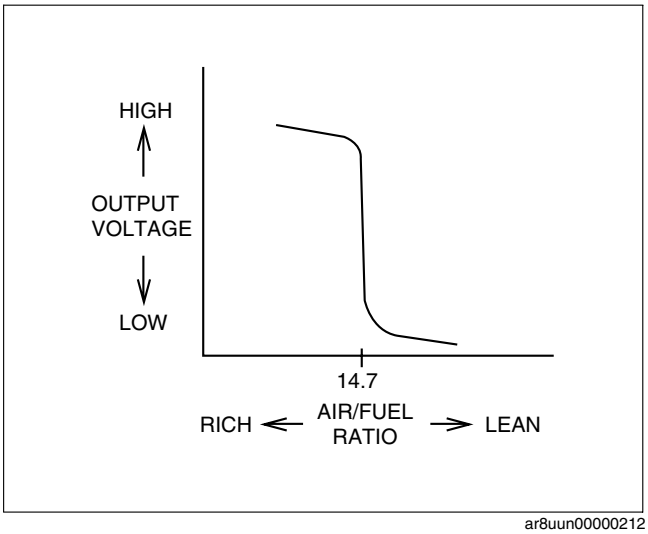

ar8uun00000212

PCM TEMPERATURE SENSOR FUNCTION [13B-MSP]

id0140g1182000

- Detects the temperature of the PCM.

PCM TEMPERATURE SENSOR CONSTRUCTION/OPERATION [13B-MSP]

id0140g1181900

- The PCM temperature sensor is integrated with PCM.
- A thermistor-type sensor (negative pressure thermistor) has been adopted.
- Voltage is output based on the resistance value which changes according to the temperature of the PCM.

PCM temperature sensor characteristic

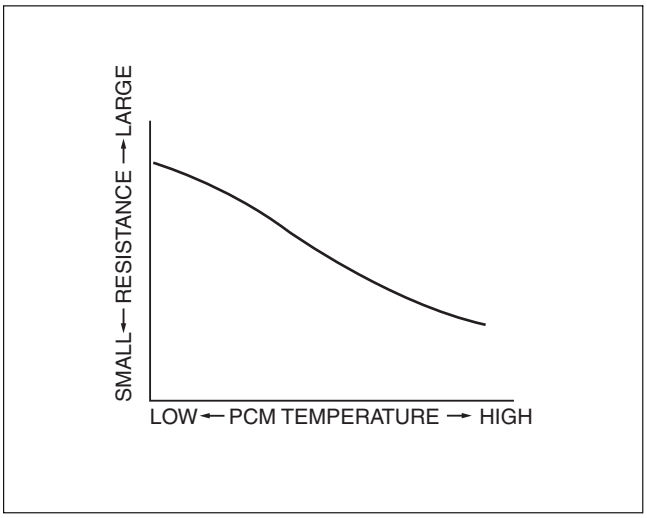

ar8uun00000253

KNOCK SENSOR (KS) CONSTRUCTION/OPERATION [13B-MSP]

id0140g1174200

- KS No.1 is installed on the front rotor housing.
- KS No.2 is installed on the rear rotor housing.
- Converts knocking vibration into a voltage value using the piezoelectric effect of the semi-conductor, and sends the value to the PCM.
- The piezoelectric effect is a phenomenon in which a difference in electric potential is produced on the surface of a piezoelectric element by the application of tensile load or pressure from a certain direction. Tensile load and pressure applied to the KS originates from cylinder block vibration caused by abnormal combustion in the engine. The difference in electric potential, which results from the strain by the vibration, is sent to the PCM as a knocking signal.

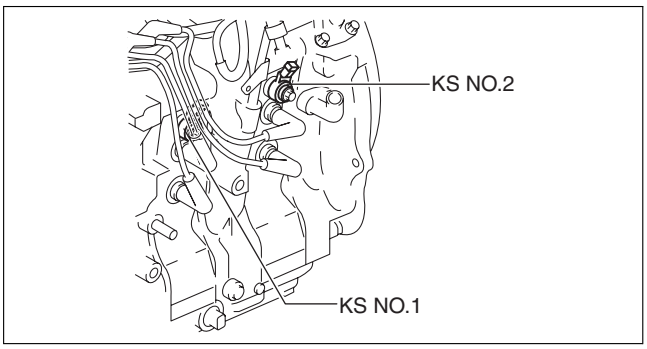

ar8uun00000254

BAROMETRIC PRESSURE (BARO) SENSOR CONSTRUCTION/OPERATION [13B-MSP]

id0140g1172900

- The BARO sensor is integrated with PCM.
- The piezoelectric element is enclosed in the sensor and the electric potential difference changes as the BARO drops. The output voltage decreases as the BARO decreases.

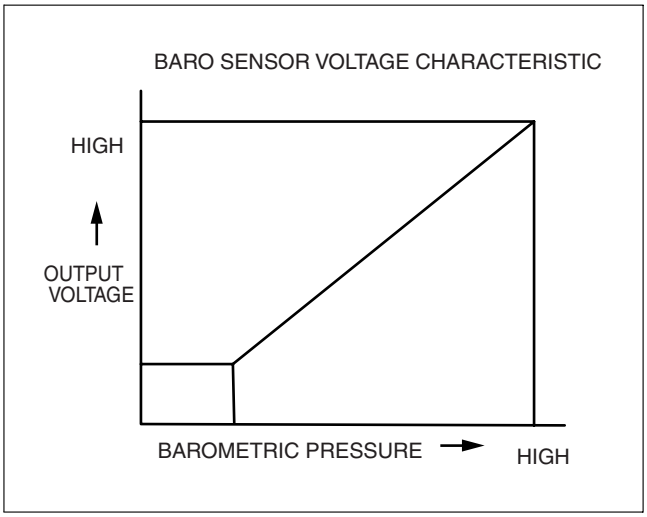

ar8uun00000234

AUXILIARY PORT VALVE (APV) POSITION SENSOR FUNCTION [13B-MSP]

id0140g1304900

- The APV position sensor detects the APV fully-closed position to monitor the APV motor operation condition.

AUXILIARY PORT VALVE (APV) POSITION SENSOR CONSTRUCTION/OPERATION [13B-MSP]

id0140g1305000

- Install the intake manifold.
- The magneto resistance element, used for the sensor, detects the APV fully-closed position and sends a voltage signal to the PCM.
- When the APV closes, the APV position sensor outputs a voltage of 1.0 V or more.

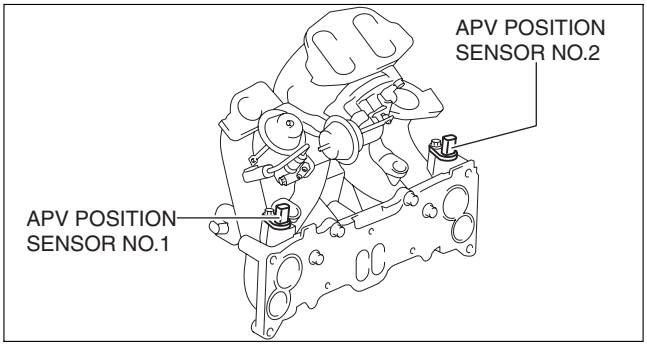

ar8uun00000295

APV position sensor voltage characteristics

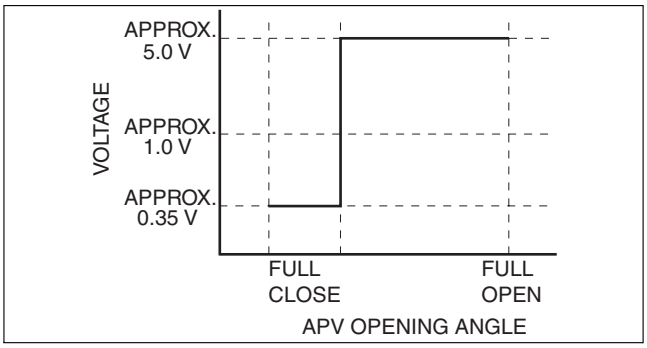

ar8uun00000333

OIL PRESSURE SENSOR FUNCTION [13B-MSP]

id0140g1790000

- Monitors the oil pressure in the metering oil pump.

OIL PRESSURE SENSOR CONSTRUCTION/OPERATION [13B-MSP]

id0140g1790100

- Installed the metering oil pump No.1.
- When pressure is applied to the piezoelectric element in the sensor, an electric potential difference occurs.
- Output voltage increases ad the oil pressure increases.

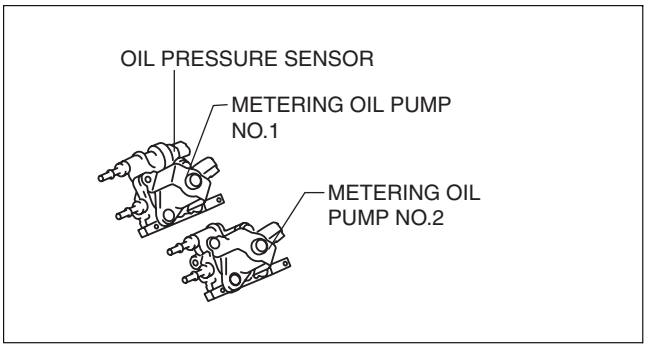

ar8uun00000255

Oil pressure sensor characteristic

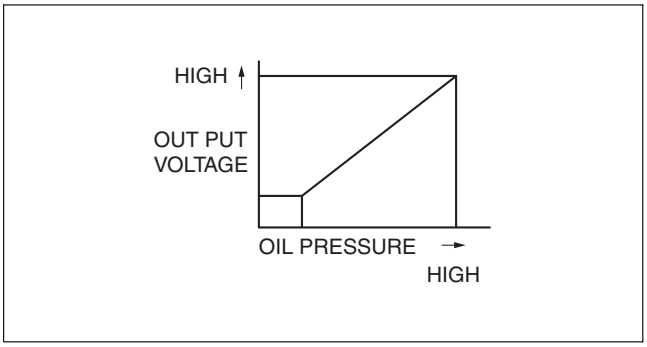

ar8uun00000256

METERING OIL PUMP DRIVER FUNCTION [13B-MSP]

id0140g1790200

- The metering oil pump driver operates metering oil pumps No.1 and No.2 to discharge engine oil based on the signals from the PCM.

METERING OIL PUMP DRIVER CONSTRUCTION/OPERATION [13B-MSP]

id0140g1790300

- Install the air pump bracket.
- The metering oil pump driver receives the signals from the PCM and switches the internal ground to supply battery voltage to metering oil pumps No.1 and No.2.

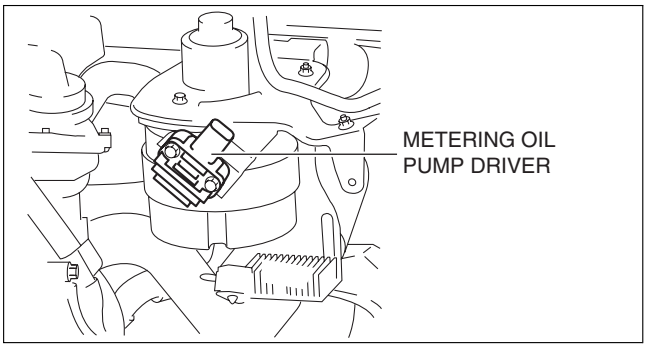

ar8uun00000296

SUSPENSION

02
SECTION

OUTLINE 02-00
ON-BOARD DIAGNOSTIC 02-02
WHEEL AND TIRES. 02-12
FRONT SUSPENSION. 02-13

02-00 OUTLINE

SUSPENSION ABBREVIATIONS 02-00–1
SUSPENSION FEATURES. 02-00–1
SUSPENSION SPECIFICATIONS 02-00–2
Suspension 02-00–2
Wheel and Tire. 02-00–2

SUSPENSION ABBREVIATIONS

id020000100100

AT	Automatic Transmission
CAN	Controller Area Network
CM	Control Module
MT	Manual Transmission
RF signal(s)	Radio Frequency signal(s)
OFF	Switch Off
ON	Switch On
PID	Parameter Identification
TPMS	Tire Pressure Monitoring System

SUSPENSION FEATURES

id020000100200

Improved rigidity and handling stability	• Trapezoidal front suspension tower bar adopted (MT)
Improved marketability	• 19 inch wheel and tire adopted for sport suspension
Improved reliability	• Tire pressure monitoring system (TPMS) specification changed

SUSPENSION SPECIFICATIONS

id020000100300

Suspension

Item					Specification			
					2009MY RX-8		2008MY RX-8	
					Standard suspension	Sport suspension	Standard suspension	Sport suspension
Front suspension	Type				Double-wishbone		←	
	Spring type				Coil spring		←	
	Shock absorber type				Monotube type: High-pressure gas charged, cylindrical, double-acting		←	
	Stabilizer	Type			Torsion bar		←	
		Diameter		(mm {in})	26.5 {1.04}		25.4 {1.00}	26.5 {1.04}
	Wheel alignment (Unloaded*1)	Total toe-in	Tire [Tolerance ±4 {0.15}]	(mm {in})	2 {0.08}		←	
				Degree	0°11′±22′		←	
		Maximum steering angle [Tolerance ±3°]		Inner	38°36′		38°41′	38°36′
				Outer	33°18′		33°15′	33°07′
		Caster angle*2 (Reference) [Tolerance ±1°]			6°20′	6°22′	6°34′	6°43′
		Camber angle*2 (Reference) [Tolerance ±1°]			-0°03′	-0°15′	0°04′	-0°06′
		Steering axis inclination (Reference)			10°59′	11°12′	10°52′	11°02′
Rear suspension	Type				Multi-link		←	
	Spring type				Coil spring		←	
	Shock absorber type				Monotube type: High-pressure gas charged, cylindrical, double-acting		←	
	Stabilizer	Type			Torsion bar		←	
		Diameter		(mm {in})	15.9 {0.62}	16 {0.63}	15.9 {0.62}	
	Wheel alignment (Unloaded*1)	Total toe-in	Tire [Tolerance ±4 {0.15}]	(mm {in})	3.6 {0.14}		3 {0.12}	
				Degree	0°19′±20′		0°16′±20′	
		Camber angle*2 [Tolerance ±1°]			-0°45′	-0°48′	-0°56′	-1°07′
		Thrust angle [Tolerance ±48′]			0°		←	

*1 : Unloaded: Fuel tank is full. Engine coolant and engine oil are at specified level. Spare tire, jack and tools are in designated position.
*2 : Difference between left and right not exceed 1°30′.

Wheel and Tire

Item			Specification	
Tire	Size		225/45R18 91W	225/40R19 89W
Wheel	Size		18 x 8J	19 x 8J
	Material		Aluminum alloy	
	Offset	(mm {in})	50 {2.0}	47 {1.9}
	Pitch circle diameter	(mm {in})	114.3 {4.50}	

02-02 ON-BOARD DIAGNOSTIC

ON-BOARD DIAGNOSTIC SYSTEM OUTLINE (TIRE PRESSURE MONITORING SYSTEM) 02-02–1
Block Diagram 02-02–2
ON-BOARD DIAGNOSTIC SYSTEM FUNCTION (TIRE PRESSURE MONITORING SYSTEM) 02-02–3
Malfunction Detection Function 02-02–3
Malfunction Indication Function 02-02–3
Memory Function 02-02–3
DTC Table 02-02–3
ON-BOARD DIAGNOSTIC SYSTEM PID/DATA MONITOR FUNCTION (TIRE PRESSURE MONITORING SYSTEM) 02-02–4
ON-BOARD DIAGNOSTIC SYSTEM ACTIVE COMMAND MODES FUNCTION (TIRE PRESSURE MONITORING SYSTEM) 02-02–5
ON-BOARD DIAGNOSTIC SYSTEM FREEZE FRAME DATA MONITOR FUNCTION (TIRE PRESSURE MONITORING SYSTEM) 02-02–5
ON-BOARD DIAGNOSTIC SYSTEM EXTERNAL TESTER COMMUNICATION FUNCTION (TIRE PRESSURE MONITORING SYSTEM) 02-02–6
External Tester Communication Function 02-02–6
Serial Communication 02-02–6
DLC-2 CONSTRUCTION 02-02–7

ON-BOARD DIAGNOSTIC SYSTEM OUTLINE (TIRE PRESSURE MONITORING SYSTEM)

id020200100100

- The on-board diagnostic system consists of a malfunction detection system that detects abnormalities in input/output signals when the ignition switch is at the ON position, a data monitor function that reads out specified input/output signals, and an active command modes function that execuse the wheel unit ID registration.
- The Data Link Connector 2 (DLC-2), which groups together all the connectors used for malfunction diagnosis into a single location, has been adopted, thereby improving serviceability. Diagnosis is performed by connecting the Mazda Modular Diagnostic System (M-MDS) to the DLC-2.
- In addition to DTC read-out, the Mazda Modular Diagnostic System (M-MDS) is used to clear DTCs using the display screen of the diagnostic tester, and to access the data monitor, providing enhanced malfunction diagnosis and improved serviceability.

Block Diagram
With advanced keyless system

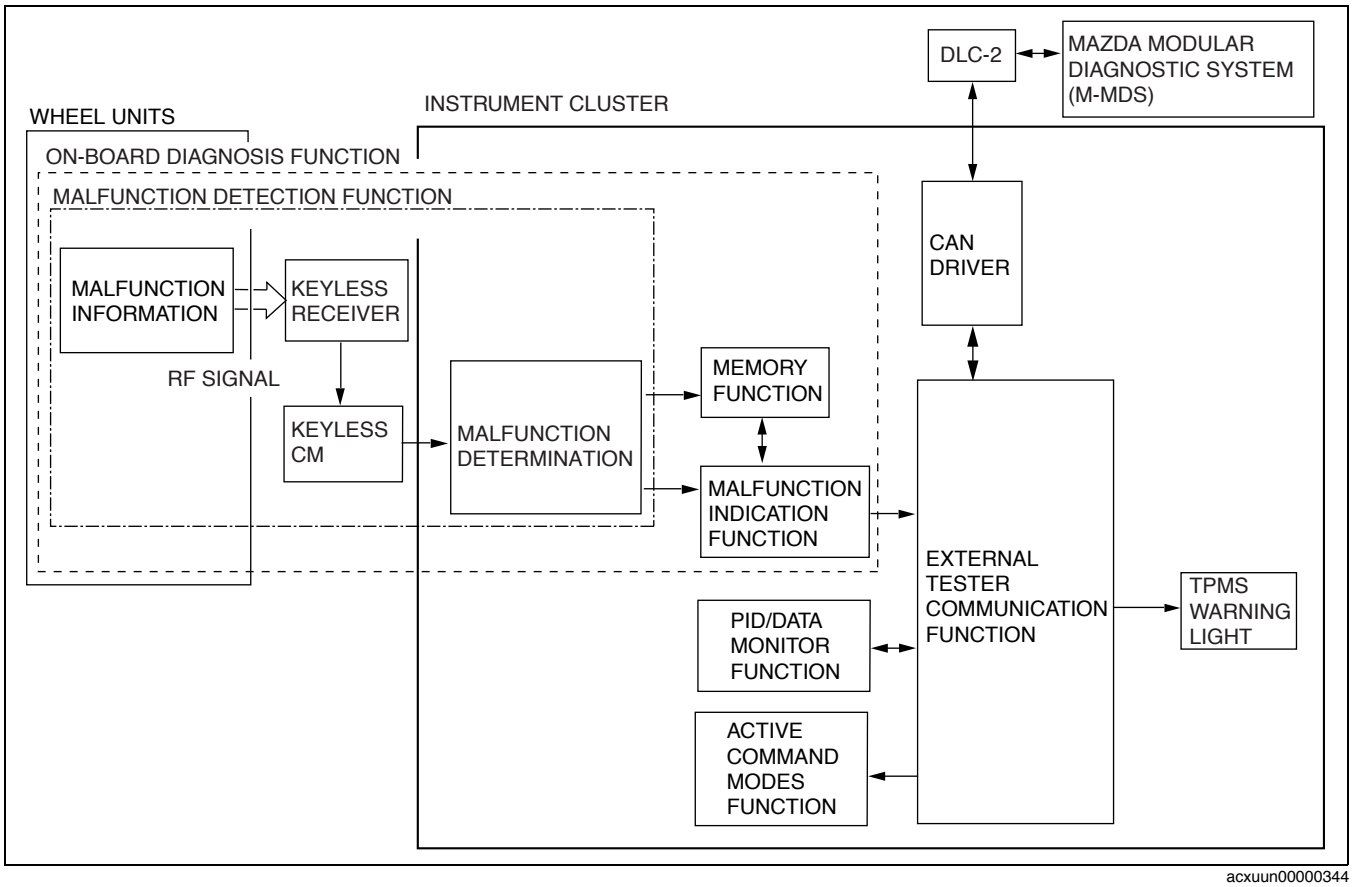

acxuun00000344

With keyless entry system

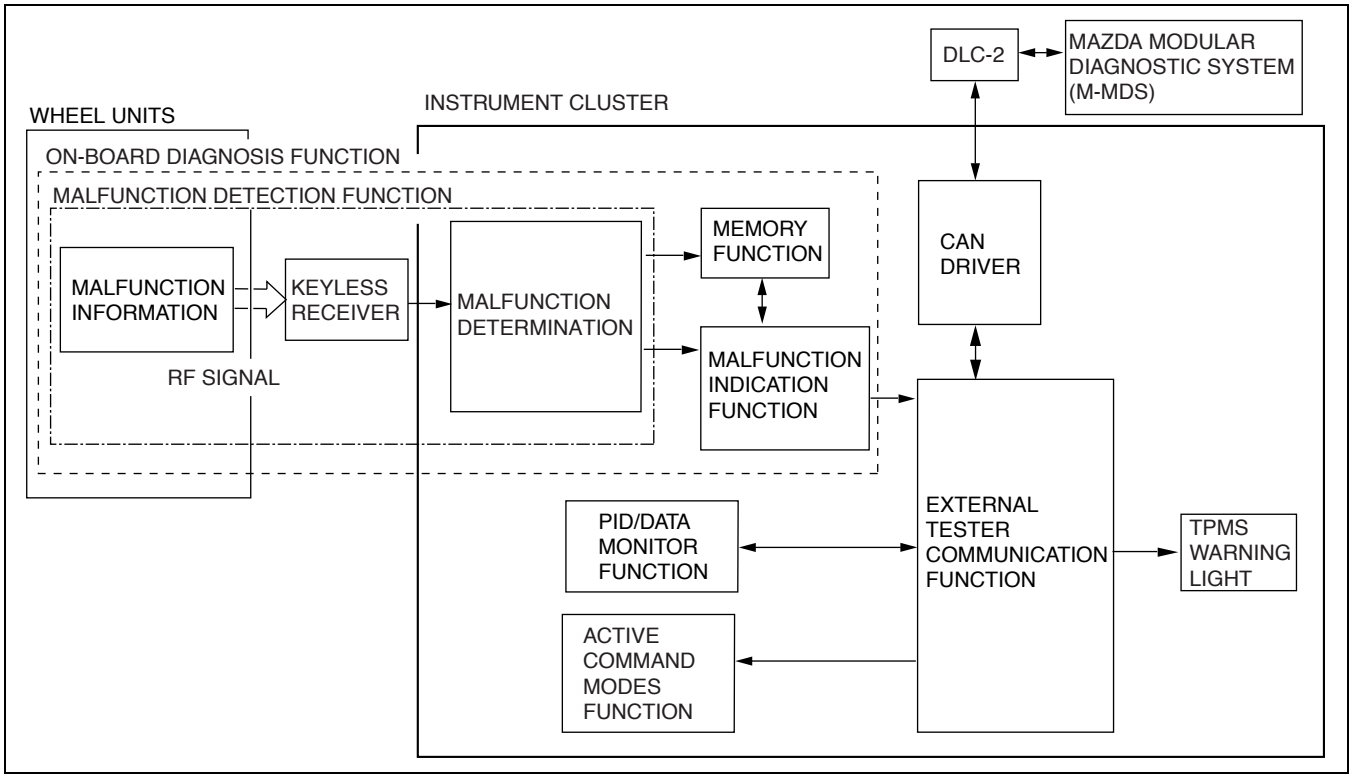

acxuun00000689

ON-BOARD DIAGNOSTIC SYSTEM FUNCTION (TIRE PRESSURE MONITORING SYSTEM)

id020200100200

Malfunction Detection Function

- The malfunction detection function detects malfunctions in the input/output signal system based on abnormal signals from the wheel units when the ignition switch is in the ON position or driving the vehicle.
- The TPMS warning light illuminates for **approx. 3.0 s** when the ignition switch is turned to the ON position to inspect for open circuits in the light.

Malfunction Indication Function

- When the malfunction detection function detects a malfunction, the TPMS warning light illuminates to advise the driver. Using the external tester communication function, DTCs can be output to the DLC-2 via the CAN communication line. At the same time, malfunction detection results are sent to the memory functions.

Memory Function

- The memory function stores DTCs for malfunctions in input/output signal systems. With this function, once a DTC is stored it is not cleared after the ignition switch has been turned off (LOCK position), even if the malfunctioning signal system has returned to normal.
- Since instrument cluster has a built-in non-volatile memory, DTCs are not cleared even if the battery is removed. Therefore, it is necessary to clear the memory after performing repairs. Refer to the Workshop Manual for the DTC clearing procedure.

DTC Table

Malfunction location	DTC	TPMS warning light illumination condition	TPMS warning light illumination pattern
Instrument cluster	B1342	Illuminated	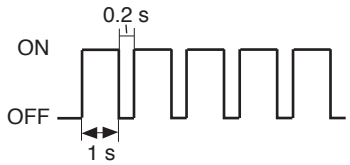
Non-volatile memory failure	B2143	Illuminated	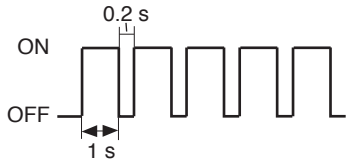
System configuration malfunction	B2477	Illuminated	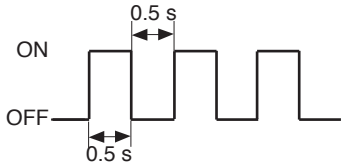
Wheel unit 1 internal fault	B2868	Illuminated	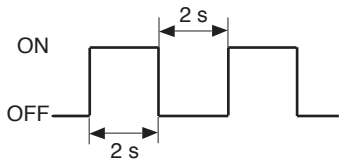
Wheel unit 2 internal fault	B2869	Illuminated	
Wheel unit 3 internal fault	B2870	Illuminated	
Wheel unit 4 internal fault	B2871	Illuminated	
CAN system communication error (HS-CAN)	U0073	Illuminated	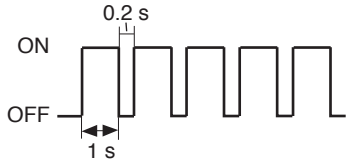
Communication error to PCM	U0100		
Lost communication with keyless receiver	U0127		
Abnormal massage from PCM	U2023		

Malfunction location	DTC	TPMS warning light illumination condition	TPMS warning light illumination pattern
Wheel unit 1 communication malfunction	U2616	Illuminated	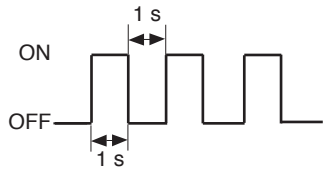
Wheel unit 2 communication malfunction	U2617	Illuminated	
Wheel unit 3 communication malfunction	U2618	Illuminated	
Wheel unit 4 communication malfunction	U2619	Illuminated	

ON-BOARD DIAGNOSTIC SYSTEM PID/DATA MONITOR FUNCTION (TIRE PRESSURE MONITORING SYSTEM)

id020200100300

- This function allows access to certain data values, input signal, calculated values, and system status information.

PID/DATA monitor table

PID name	Description (Input/output part)	Operation/unit (Mazda Modular Diagnostic System (M-MDS))
AI_WU1_ID	Candidate wheel unit during registering wheel unit ID (wheel unit 1)	–
AI_WU2_ID	Candidate wheel unit during registering wheel unit ID (wheel unit 2)	–
AI_WU3_ID	Candidate wheel unit during registering wheel unit ID (wheel unit 3)	–
AI_WU4_ID	Candidate wheel unit during registering wheel unit ID (wheel unit 4)	–
AI_WU1_P	Tire pressure during registering wheel unit ID (wheel unit 1)	Pa, psi
AI_WU2_P	Tire pressure during registering wheel unit ID (wheel unit 2)	Pa, psi
AI_WU3_P	Tire pressure during registering wheel unit ID (wheel unit 3)	Pa, psi
AI_WU4_P	Tire pressure during registering wheel unit ID (wheel unit 4)	Pa, psi
CCNT_TPMS	Number of continuous DTCs	–
FFD1_WU1_P	Freeze frame PID data1_tire pressure (wheel unit 1)	Pa, psi
FFD1_WU2_P	Freeze frame PID data1_tire pressure (wheel unit 2)	Pa, psi
FFD1_WU3_P	Freeze frame PID data1_tire pressure (wheel unit 3)	Pa, psi
FFD1_WU4_P	Freeze frame PID data2_tire pressure (wheel unit 4)	Pa, psi
FFD2_WU1_P	Freeze frame PID data2_tire pressure (wheel unit 1)	Pa, psi
FFD2_WU2_P	Freeze frame PID data2_tire pressure (wheel unit 2)	Pa, psi
FFD2_WU3_P	Freeze frame PID data2_tire pressure (wheel unit 3)	Pa, psi
FFD2_WU4_P	Freeze frame PID data2_tire pressure (wheel unit 4)	Pa, psi
FFD1_WU1_T	Freeze frame PID data1_tire temperature (wheel unit 1)	°C, °F
FFD1_WU2_T	Freeze frame PID data1_tire temperature (wheel unit 2)	°C, °F
FFD1_WU3_T	Freeze frame PID data1_tire temperature (wheel unit 3)	°C, °F
FFD1_WU4_T	Freeze frame PID data2_tire temperature (wheel unit 4)	°C, °F
FFD2_WU1_T	Freeze frame PID data2_tire temperature (wheel unit 1)	°C, °F
FFD2_WU2_T	Freeze frame PID data2_tire temperature (wheel unit 2)	°C, °F
FFD2_WU3_T	Freeze frame PID data2_tire temperature (wheel unit 3)	°C, °F
FFD2_WU4_T	Freeze frame PID data2_tire temperature (wheel unit 4)	°C, °F
FFD1_MLG	Freeze frame PID data1 mileage	m, mi (ft)
FFD2_MLG	Freeze frame PID data2 mileage	m, mi (ft)
FFD1_SPD	Freeze flame PID data1_speed	KPH, MPH
FFD2_SPD	Freeze flame PID data2_speed	KPH, MPH
ID_LAST	Last received tire transmitter ID code value	–
ID_WU1*	Registered wheel unit ID (Wheel unit 1)	–

PID name	Description (Input/output part)	Operation/unit (Mazda Modular Diagnostic System (M-MDS))
ID_WU2*	Registered wheel unit ID (Wheel unit 2)	–
ID_WU3*	Registered wheel unit ID (Wheel unit 3)	–
ID_WU4*	Registered wheel unit ID (Wheel unit 4)	–
SPODMETER	Vehicle speed	KPH, MPH
VBATT	Battery positive voltage	V
WU1_P*	Tire pressure (wheel unit 1)	Pa, psi
WU2_P*	Tire pressure (wheel unit 2)	Pa, psi
WU3_P*	Tire pressure (wheel unit 3)	Pa, psi
WU4_P*	Tire pressure (wheel unit 4)	Pa, psi
WU1_T*	Tire temperature (wheel unit 1)	°C, °F
WU2_T*	Tire temperature (wheel unit 2)	°C, °F
WU3_T*	Tire temperature (wheel unit 3)	°C, °F
WU4_T*	Tire temperature (wheel unit 4)	°C, °F

* : Data transmission from the wheel unit occurs when the vehicle speed is **25 km/h {15.5 mph} or more**. Due to this, the current air pressure and temperature data can only be displayed after the vehicle is driven at **25 km/h {15.5 mph} or more**. Also, the ID_LAST, and tire pressure and internal tire air temperature data are erased when the instrument cluster connector and the battery terminal are disconnected. If the instrument cluster is replaced or the battery terminals are disconnected, drive the vehicle at **25 km/h {15.5 mph} or more** and display the tire pressure PID after the data transmission.

ON-BOARD DIAGNOSTIC SYSTEM ACTIVE COMMAND MODES FUNCTION (TIRE PRESSURE MONITORING SYSTEM)

id020200100400

- The active command modes function is used for executing the wheel unit ID registration

Command name	Description	Operation	Operation condition
IDR_MODE	Wheel unit ID registration	Off/On	Ignition switch at ON

ON-BOARD DIAGNOSTIC SYSTEM FREEZE FRAME DATA MONITOR FUNCTION (TIRE PRESSURE MONITORING SYSTEM)

id020200100500

- The Freeze Frame Data monitor items are shown below.

Freeze frame data monitor table

PID name	Description	Operation/unit (Mazda Modular Diagnostic System (M-MDS))
FFD1_WU1_P	Freeze frame PID data1_tire pressure (wheel unit 1)	Pa, psi
FFD1_WU2_P	Freeze frame PID data1_tire pressure (wheel unit 2)	Pa, psi
FFD1_WU3_P	Freeze frame PID data1_tire pressure (wheel unit 3)	Pa, psi
FFD1_WU4_P	Freeze frame PID data1_tire pressure (wheel unit 4)	Pa, psi
FFD2_WU1_P	Freeze frame PID data2_tire pressure (wheel unit 1)	Pa, psi
FFD2_WU2_P	Freeze frame PID data2_tire pressure (wheel unit 2)	Pa, psi
FFD2_WU3_P	Freeze frame PID data2_tire pressure (wheel unit 3)	Pa, psi
FFD2_WU4_P	Freeze frame PID data2_tire pressure (wheel unit 4)	Pa, psi
FFD1_WU1_T	Freeze frame PID data1_tire temperature (wheel unit 1)	°C, °F
FFD1_WU2_T	Freeze frame PID data1_tire temperature (wheel unit 2)	°C, °F
FFD1_WU3_T	Freeze frame PID data1_tire temperature (wheel unit 3)	°C, °F
FFD1_WU4_T	Freeze frame PID data2_tire temperature (wheel unit 4)	°C, °F
FFD2_WU1_T	Freeze frame PID data2_tire temperature (wheel unit 1)	°C, °F
FFD2_WU2_T	Freeze frame PID data2_tire temperature (wheel unit 2)	°C, °F
FFD2_WU3_T	Freeze frame PID data2_tire temperature (wheel unit 3)	°C, °F
FFD2_WU4_T	Freeze frame PID data2_tire temperature (wheel unit 4)	°C, °F
FFD1_MLG	Freeze frame PID data1 mileage	m, mi (ft)
FFD2_MLG	Freeze frame PID data2 mileage	m, mi (ft)
FFD1_SPD	Freeze flame PID data1_speed	KPH, MPH
FFD2_SPD	Freeze flame PID data2_speed	KPH, MPH

ON-BOARD DIAGNOSTIC SYSTEM EXTERNAL TESTER COMMUNICATION FUNCTION (TIRE PRESSURE MONITORING SYSTEM)

id020200100600

External Tester Communication Function

- The external tester communication function communicates diagnostic information (reading DTCs and reading input/output signal) by sending and receiving signals between the instrument cluster and an external tester.

Connection and communication information

	External tester	
	Mazda Modular Diagnostic System (M-MDS)	
	Connection	Communication method
On-board diagnostic (malfunction detection) function	Input/output: CAN communication line	Serial communication
PID/Data monitor function	Input/output: CAN communication line	Serial communication
Active command modes function	Input/output: CAN communication line	Serial communication

Serial Communication

- Serial communication (synchronous communication) is a method of communication in which many pieces of information are sent and received instantaneously through a single wire.
- By connecting the Mazda Modular Diagnostic System (M-MDS) to DLC-2, diagnostic information can be sent and received between the Mazda Modular Diagnostic System (M-MDS) and the instrument cluster via the CAN communication line.
- The instrument cluster receives signals for the malfunction detection function and data monitor function from the Mazda Modular Diagnostic System (M-MDS), and sends information about DTCs and input/output part operating conditions to the Mazda Modular Diagnostic System (M-MDS).

Diagnostic function	Signal received	Signal sent
Malfunction detection function	DTC verification signal	DTC
PID/Data monitor function	Request signal to read selected monitor item	Monitor information for requested monitor item
Active command modes function	Operation command signal for selected active command modes item	Wheel unit ID registration

DLC-2 CONSTRUCTION

id020200100700

- A DLC-2 connector conforming to ISO (International Organization for Standardization) standards has been added.
- Shape and terminal arrangement as stipulated by the ISO 15031-3 (SAE J1962) international standard has been adopted for this connector. The connector has a 16-pin construction that includes the CAN_H (HS), CAN_L (HS), CAN_H (MS), CAN_L (MS), GND1, GND2 and B+ terminals.

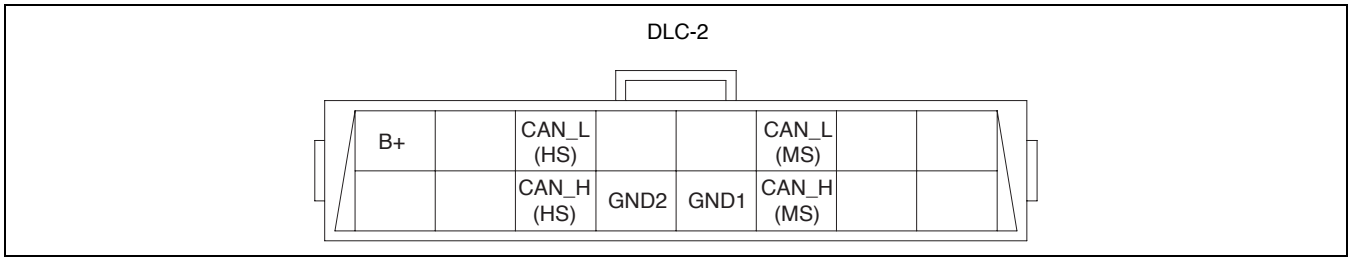

acxuun00000291

Terminal	Function
CAN_L (HS)	Serial communication Lo terminal (HS)
CAN_H (HS)	Serial communication Hi terminal (HS)
CAN_L (MS)	Serial communication Lo terminal (MS)
CAN_H (MS)	Serial communication Hi terminal (MS)
GND1	Body ground terminal
GND2	Serial communication ground terminal
B+	Battery power supply terminal

02-12 WHEEL AND TIRES

WHEELS AND TIRES OUTLINE. 02-12–1
WHEELS AND TIRES STRUCTURAL VIEW 02-12–1
TIRE PRESSURE MONITORING SYSTEM (TPMS) OUTLINE 02-12–2
TIRE PRESSURE MONITORING SYSTEM (TPMS) STRUCTURAL VIEW 02-12–2
TIRE PRESSURE MONITORING SYSTEM (TPMS) WIRING DIAGRAM 02-12–3
With Advanced Keyless System. **02-12–3**
With Keyless Entry System **02-12–3**
TIRE PRESSURE MONITORING SYSTEM (TPMS) CONSTRUCTION/OPERATION 02-12–4
Construction **02-12–4**
Operation **02-12–4**
Component Parts/Function **02-12–5**
TIRE PRESSURE MONITORING SYSTEM (TPMS) OPERATION 02-12–5
Identification Code Recognition Function **02-12–5**
Tire Pressure Determination And Warning Function **02-12–5**
TIRE PRESSURE MONITORING SYSTEM (TPMS) WARNING LIGHT CONSTRUCTION 02-12–6
CONTROLLER AREA NETWORK (CAN) OUTLINE 02-12–6
Received Information from PCM **02-12–6**

WHEELS AND TIRES OUTLINE

id021200100100

- An 18-inch aluminum alloy wheel is equipped for the standard suspension, and a 19-inch aluminum alloy wheel is equipped for the sport suspension.
- An adhesive-type balance weight is fastened on the outer side of the wheel from behind and is not visible from the styled side.
- In consideration of the environment, a balance weight made of steel has been adopted to reduce amount of lead used in the vehicle.

WHEELS AND TIRES STRUCTURAL VIEW

id021200100200

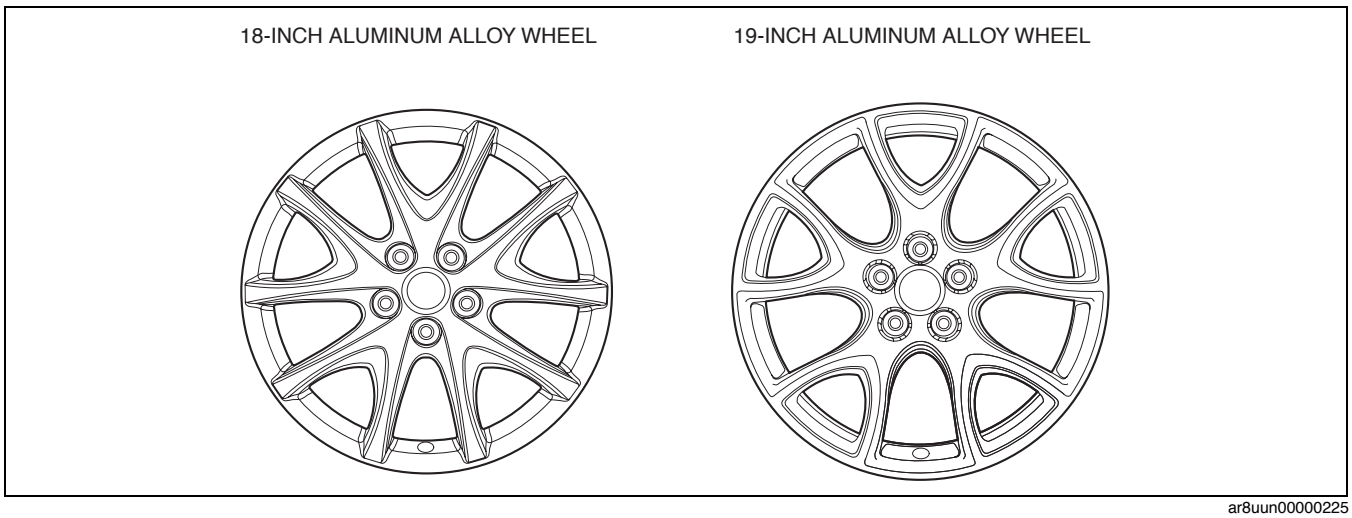

ar8uun00000225

TIRE PRESSURE MONITORING SYSTEM (TPMS) OUTLINE

id021200100400

- The tire pressure monitoring system (TPMS) has been adopted to assist the driver in understanding the tire status. It alerts the driver with the TPMS warning light and buzzer if there is an excessive drop in air pressure or a flat tire is detected.

Caution

- **Each wheel unit has its own preset identification code. If a system component is replaced, the system becomes inoperative since the instrument cluster cannot recognize the identification codes. Therefore, be sure to configure the identification codes of wheel units when any of the following items have been performed. For the identification code configuration procedure, refer to the Workshop Manual.**
  - **Disc wheel replacement**
  - **Wheel unit replacement**
  - **Instrument cluster replacement**

Note

- Perform tire pressure adjustment before driving. (When tires are cold.)
- Tire pressure changes due to changes in ambient temperature and internal tire temperature.
  - In an area or a season with varying of temperatures, tire pressure will change due to ambient temperature change. If the tire pressure is lower than the lower-limit pressure due to low ambient temperature, the TPMS warning light may illuminate. Adjust the pressure when the TPMS warning light illuminates.
  - Tire pressure rises after driving because the internal temperature of the tire is high, If tire pressure is adjusted to the standard value when the internal temperature of the tire is high, the tire pressure lowers when the internal temperature decreases to the same level as the ambient temperature. If the tire pressure is lower than the lower-limit temperature, the TPMS warning light may illuminate.
- As a general reference, air pressure changes **approx.10 kPa {0.1 kgf/cm^2, 1.5 psi}** when the temperature changes **10 °C {50 °F}**.

TIRE PRESSURE MONITORING SYSTEM (TPMS) STRUCTURAL VIEW

id021200100500

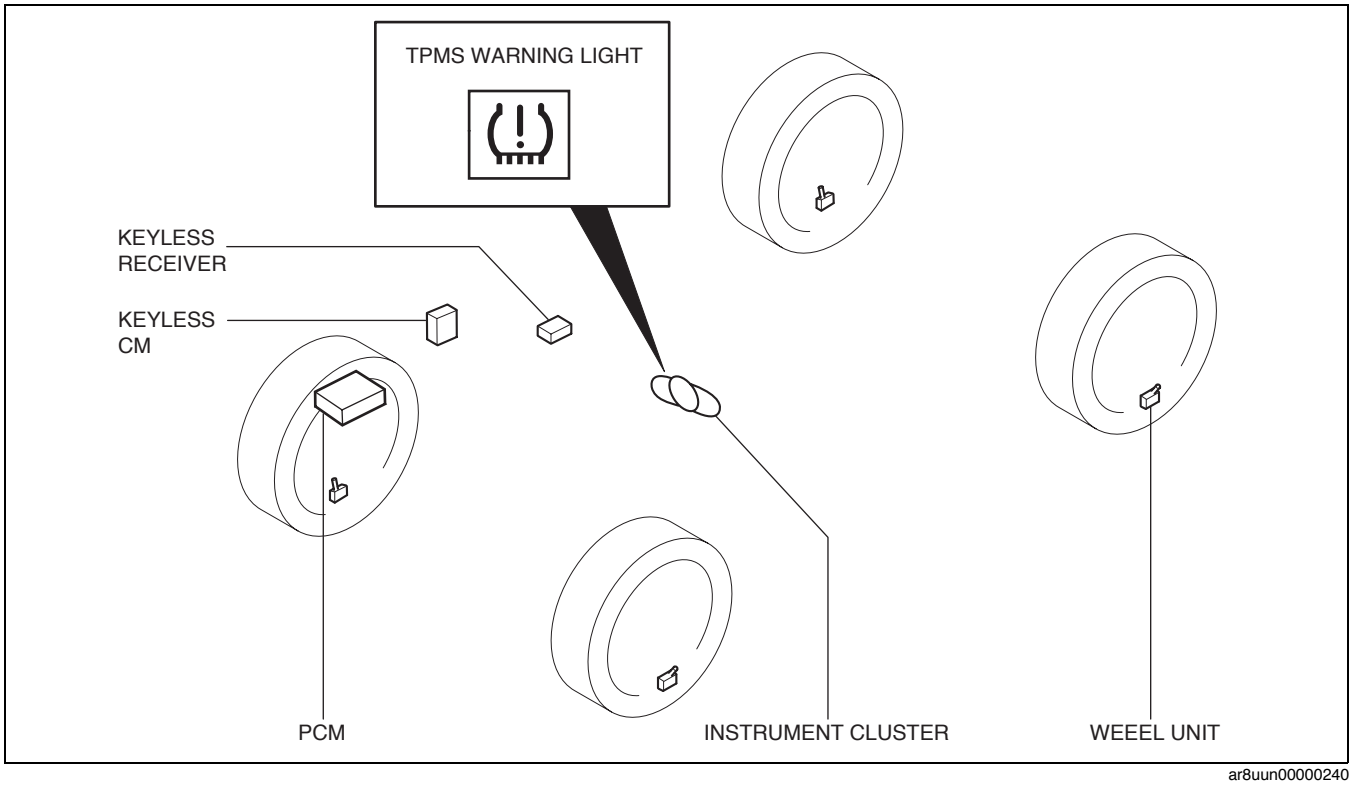

ar8uun00000240

TIRE PRESSURE MONITORING SYSTEM (TPMS) WIRING DIAGRAM

id021200100600

With Advanced Keyless System

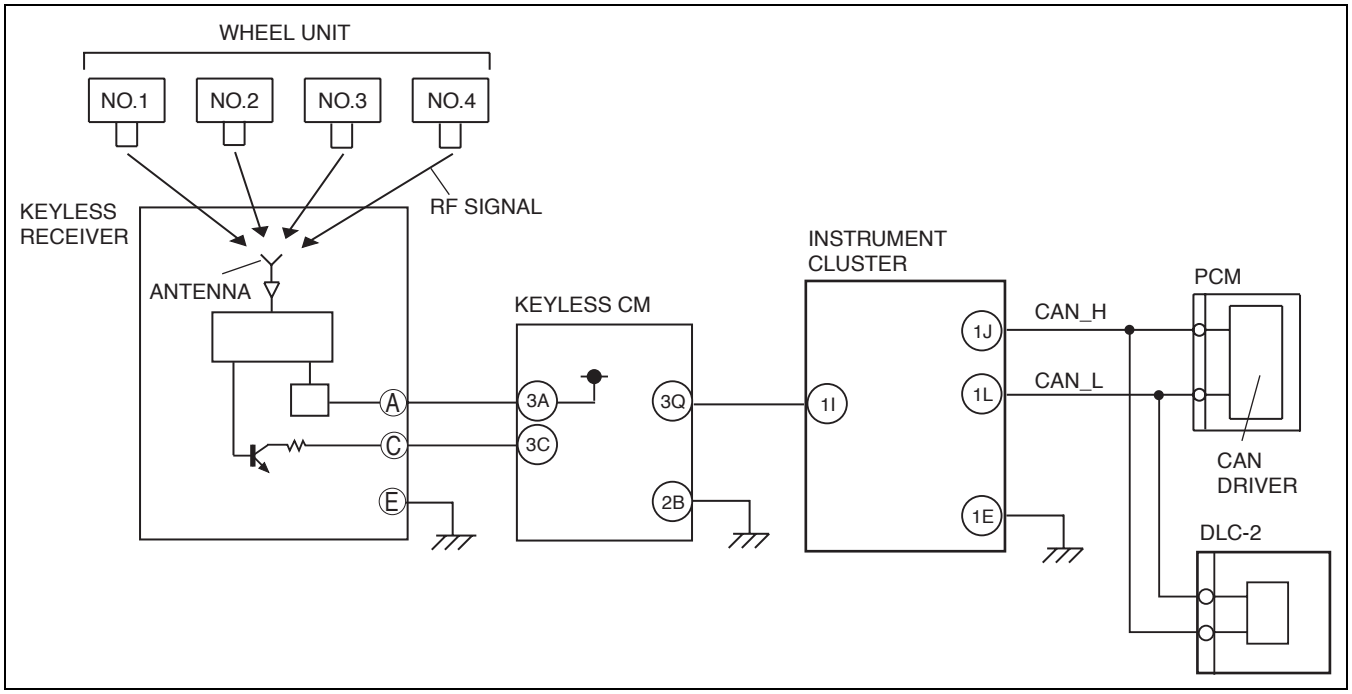

ar8uuw00001562

With Keyless Entry System

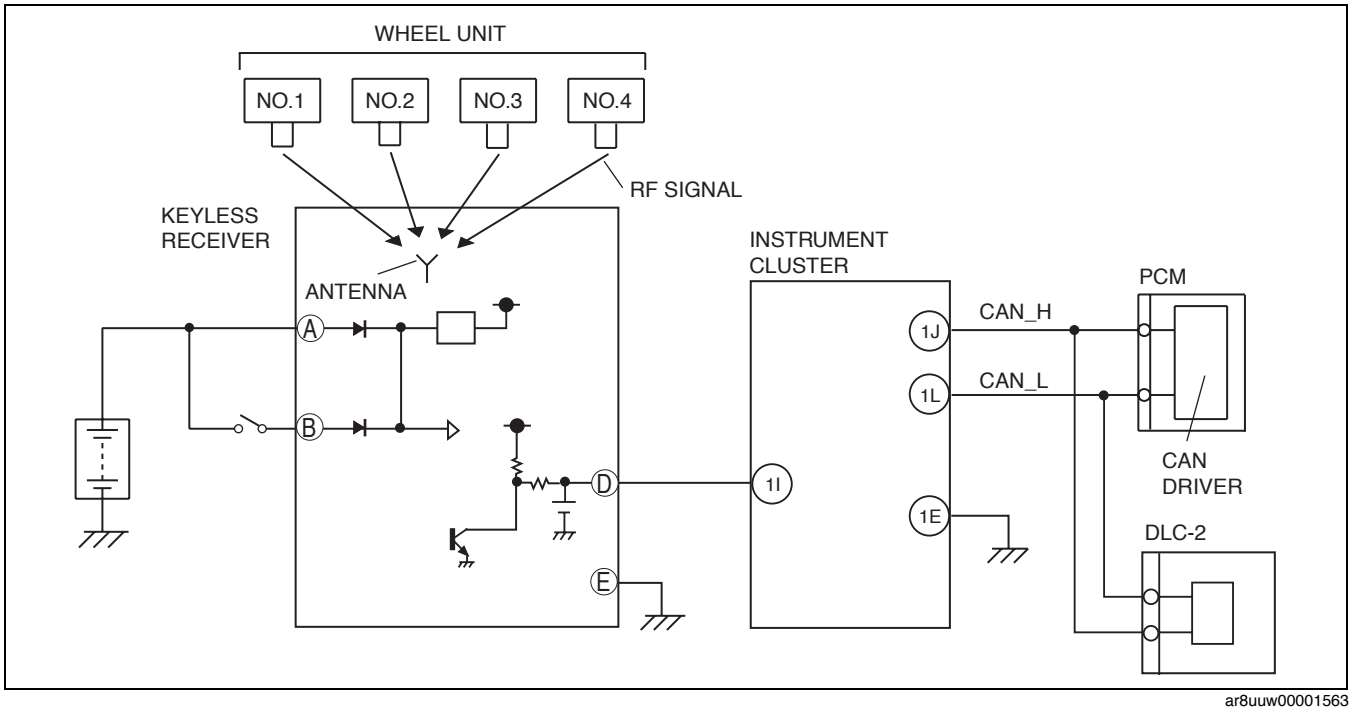

ar8uuw00001563

TIRE PRESSURE MONITORING SYSTEM (TPMS) CONSTRUCTION/OPERATION

id021200100700

Construction

- The TPMS consists of wheel units that detect air pressure, temperature and acceleration of each tire, and a TPMS control module that receives data (RF signals) sent from the wheel units to monitor the air pressure of each tire.

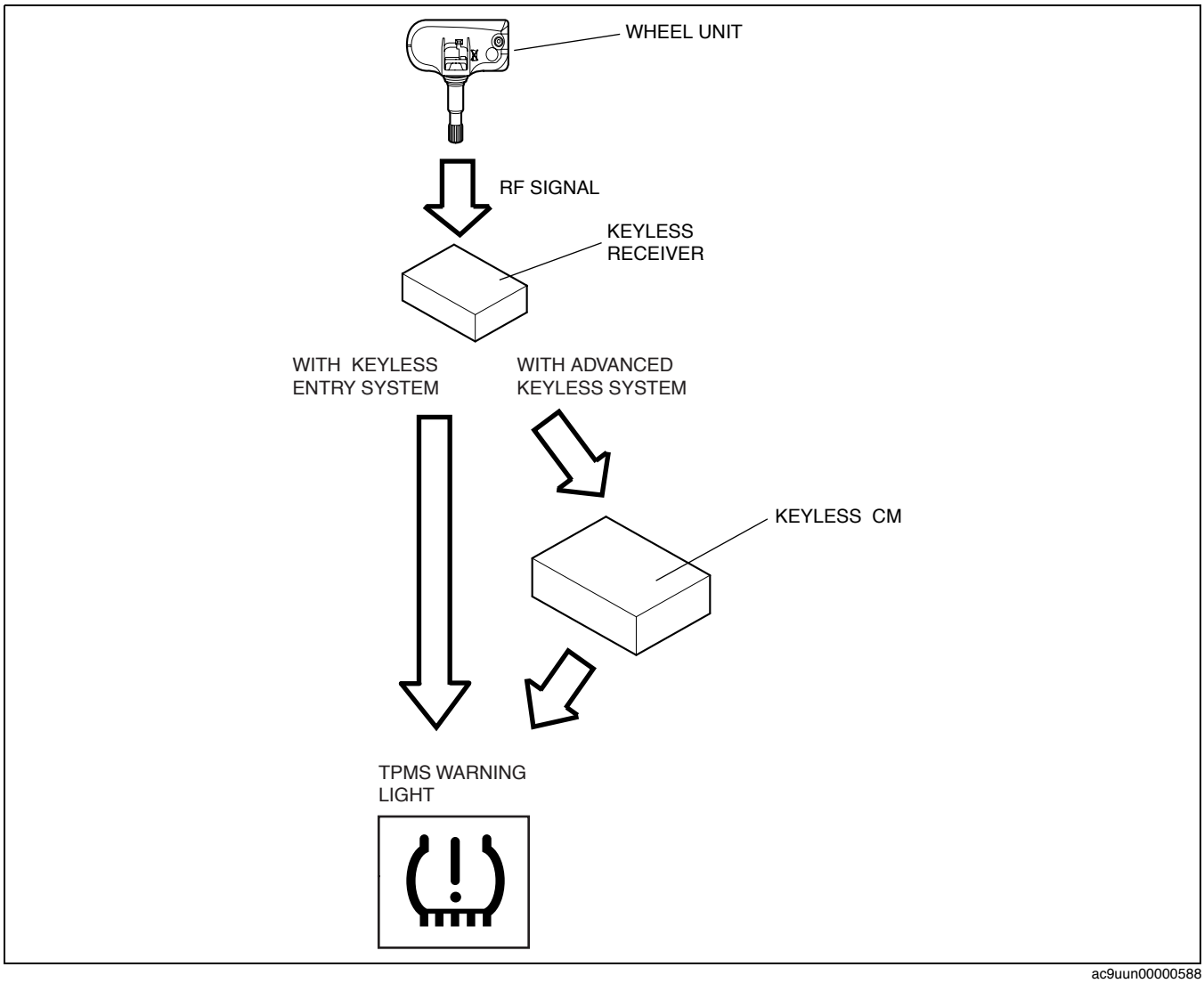

ac9uun00000588

Operation

- The wheel unit installed to each wheel sends data on air pressure, temperature and acceleration of each tire by means of RF signals. The keyless receiver receives these signals with a built-in antenna.
- With advanced keyless system: Signals received by the keyless receiver are transmitted to the instrument cluster via the keyless CM.
- With keyless entry system: Signals received by the keyless receiver are transmitted to the instrument cluster.
- The instrument cluster monitors the air pressure of each tire based on the tire data sent from each wheel unit. If the instrument cluster detects an excessive drop in air pressure or flat tire, the instrument cluster illuminates the TPMS warning light.

Component Parts/Function

Part name		Function
Wheel unit		• Monitors air pressure, temperature, and acceleration of each tire, and sends RF signals. • Sends data if any abnormality is detected in the wheel unit.
Keyless receiver		• With advanced keyless system: Send the RF signals received from the wheel unit to the keyless CM. • With keyless entry system: Send the RF signals received from the wheel unit to the instrument cluster.
Keyless CM (with advanced keyless system)		• Receives data from the keyless receiver. • Sends data to the instrument cluster.
PCM	Vehicle speed signal	• Inputs vehicle speed signals to the instrument cluster via CAN communication.
Instrument cluster		• Receives data from keyless CM (with advanced keyless system) or keyless receiver (with keyless entry system) and monitor the air pressure of each wheel. If it determines from those signals that tire pressure is abnormal, it controls the TPMS warning light to alert the driver.
	TPMS warning light	• If the instrument cluster detects abnormal air pressure or any abnormality in the system, the light is illuminated to alert the driver.

TIRE PRESSURE MONITORING SYSTEM (TPMS) OPERATION

id021200101000

- The instrument cluster monitors the tire pressure of each tire and the wheel units for abnormalities using the received data. If any abnormality is found, it controls TPMS warning light to alert and notify the driver.
- The instrument cluster controls the following functions based on the received data:

Function list

Identification code recognition function	• Recognizes whether received signals are from own wheel units.
Tire pressure determination/warning function	• Compares received tire pressure data with preset values. If the pressure is determined to be too low, the instrument cluster alerts the driver via the TPMS warning light.

Identification Code Recognition Function

- Since the identification codes of wheel units mounted on the vehicle have been configured in the instrument cluster, the instrument cluster can verify the identification codes sent from the wheel units against the configured identification codes.
- When the received identification code agrees with the configured identification code, data such as tire pressure is updated according to the received signal. When the identification code does not agree, that signal data is ignored.

Tire Pressure Determination And Warning Function

- The instrument cluster determines the tire pressure status of each wheel by comparing tire pressure data received from the wheel units with the preset values in the instrument cluster.
- If a malfunction is detected in the received signals, the instrument cluster flashes the TPMS warning light to notify the driver of a tire malfunction.
- The informing/warning of an abnormal tire pressure determination takes precedence over the informing/warning of a missing signal or malfunction determination.

Low-pressure determination

- When tire pressure data is lower than the detection value configured in the instrument cluster, the instrument cluster determines that the tire for that wheel unit has low tire pressure.
  - — If low tire pressure is determined when the ignition is on, the TPMS warning light is illuminated.
  - — If low tire pressure is determined when the ignition is off, the instrument cluster performs an open-circuit check[*1] on the TPMS warning light after the ignition is turned on, and then illuminates the TPMS warning light.

- The low-pressure determination is retained until tire pressure data from the applicable wheel unit returns to the preset value.
  - — If tire pressure data that is higher than the specified value is received when the ignition is on, the instrument cluster turns out the TPMS warning light.
  - — If tire pressure data that is higher than the specified value is received when the ignition is off, the module performs an open-circuit check[*1] on the TPMS warning light after the ignition is turned on and turns out the TPMS warning light.

    [*1]: The instrument cluster turns on the TPMS warning light for **3 s** after the ignition is turned on for an open-circuit check of the TPMS warning light.

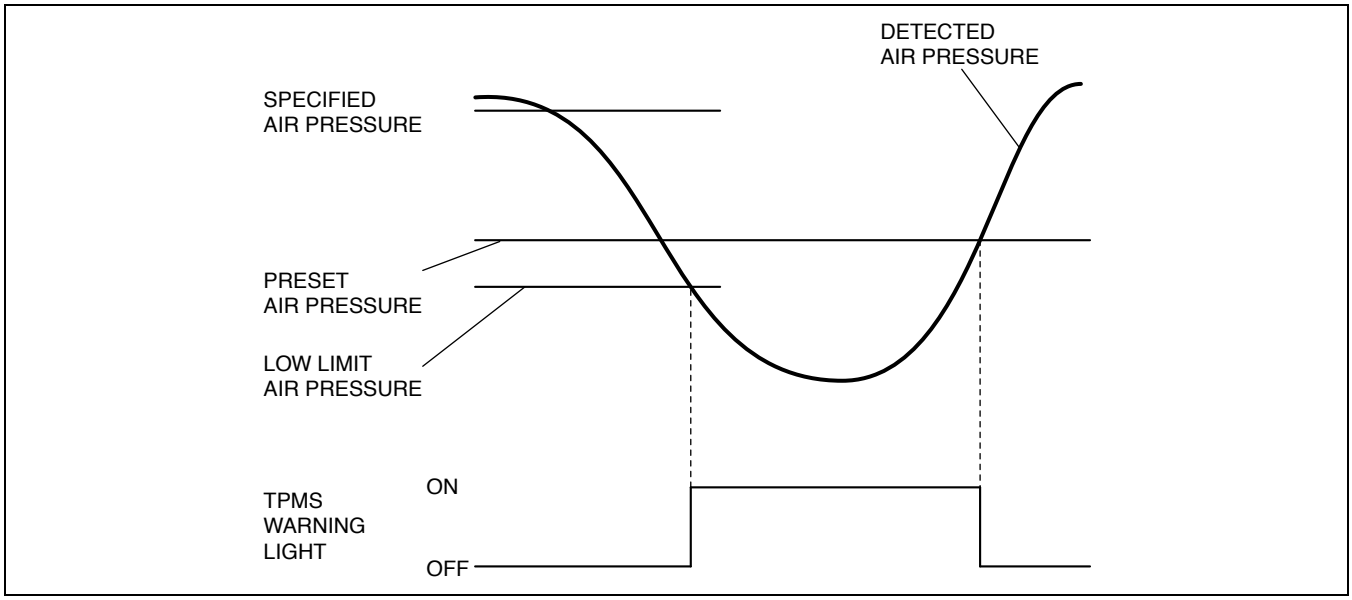

acxuun00000352

TIRE PRESSURE MONITORING SYSTEM (TPMS) WARNING LIGHT CONSTRUCTION

id021200101100

- The TPMS warning light is built into the instrument cluster.
- In the event of any abnormality in tire pressure or in the system, signals illuminate the warning light to alert the driver.

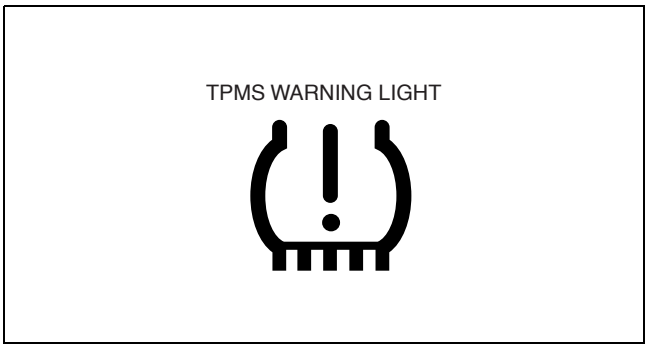

acxuun00000691

CONTROLLER AREA NETWORK (CAN) OUTLINE

id021200101300

- The instrument cluster receives information using the CAN system. See Section 09 for detailed information regarding the CAN system. (See 09-40-1 CONTROL SYSTEM OUTLINE.) (See 09-40-3 CONTROLLER AREA NETWORK (CAN) SYSTEM WIRING DIAGRAM.) (See 09-40-7 CONTROLLER AREA NETWORK (CAN) SYSTEM SIGNAL-CHART.)

Received Information from PCM

- Vehicle speed

02-13 FRONT SUSPENSION

FRONT SUSPENSION OUTLINE 02-13–1
FRONT SUSPENSION STRUCTURAL VIEW 02-13–1

FRONT SUSPENSION OUTLINE

id021300100100

- Trapezoidal front suspension tower bar adopted to improve the rigidity and handling stability. (MT)

FRONT SUSPENSION STRUCTURAL VIEW

id021300100200

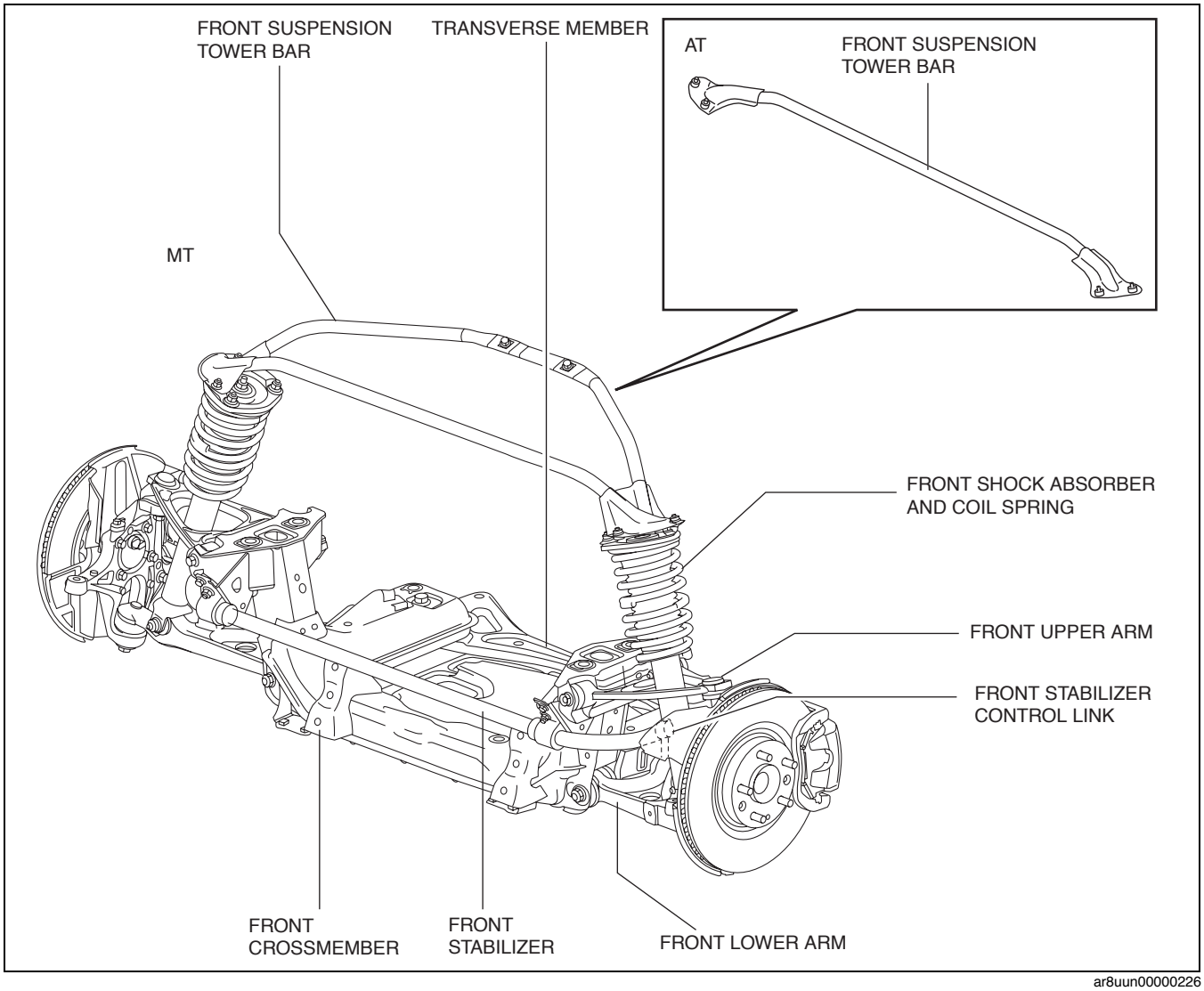

ar8uun00000226

DRIVELINE/AXLE

03
SECTION

OUTLINE 03-00

FRONT AXLE 03-11

03-00 OUTLINE

DRIVELINE/AXLE ABBREVIATIONS . . . 03-00–1
DRIVELINE/AXLE FEATURES 03-00–1
DRIVELINE/AXLE SPECIFICATIONS. . . 03-00–1

DRIVELINE/AXLE ABBREVIATIONS

id030000150300

AT	Automatic Transmission
MT	Manual Transmission

DRIVELINE/AXLE FEATURES

id030000100100

Improved driveability	• Final gear ratio optimized • Drive shaft specification optimized

DRIVELINE/AXLE SPECIFICATIONS

id030000100200

Item		Specification			
		2009MY RX-8		2008MY RX-8	
		MT	AT	MT	AT
Front axle					
Bearing type		Angular ball bearing		←	
Rear axle					
Bearing type		Angular ball bearing		←	
Rear drive shaft					
Joint type	Wheel side	Bell joint		←	
	Differential side	Tripod joint		←	
Shaft diameter (mm {in})		34.0 {1.34} (Maximum diameter) 28.6 {1.13} (Minimum diameter)	25.8 {1.02} (Maximum diameter) 24.0 {0.95} (Minimum diameter)	Left side: 31.0 {1.22} (Maximum diameter) 27.0 {1.06} (Minimum diameter) Right side: 34.0 {1.34} (Maximum diameter) 27.0 {1.06} (Minimum diameter)	Left side: 25.0 {0.98} Right side 25.8 {1.02}
Rear differential					
Reduction gear type		Hypoid gear		←	
Differential gear type		Straight bevel gear		←	
Ring gear size (inch)		8		←	
Reduction ratio		4.777	4.300	4.444	

Item			Specification			
			2009MY RX-8		2008MY RX-8	
			MT	AT	MT	AT
Number of gear teeth		Drive pinion	9	10	9	
		Ring gear	43		40	
Differential oil	Type	Grade	API service GL-5		←	
		Viscosity	SAE 90 SAE 80W-90 SAE 75W-90 (Not available from MAZDA)		←	
	Capacity (approx. quantity) (L {US qt, Imp qt})		1.3 {1.4, 1.1}		←	
Propeller shaft						
Length (mm {in})		L	1,078 {42.44}		←	
Diameter (mm {in})		D1	76 {3.0}	82.6 {3.25}	←	
		D2	71.5 {2.81}	—	←	
		D3	76 {3.0}	—	←	

MT

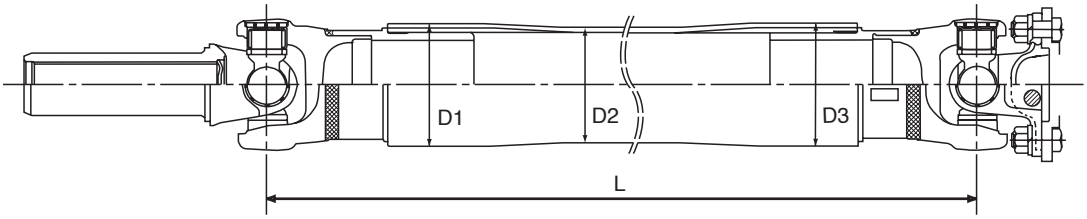

AT

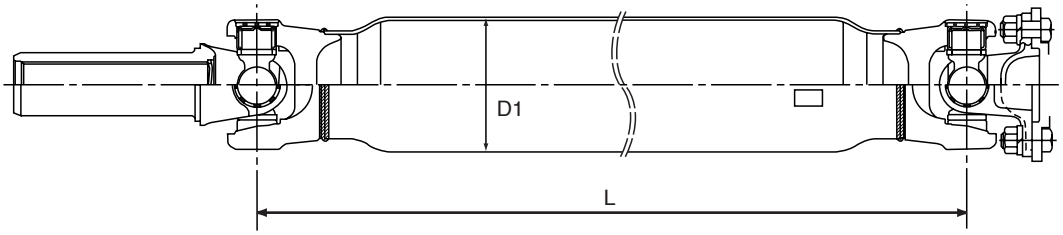

03-11 FRONT AXLE

FRONT AXLE OUTLINE 03-11–1
FRONT AXLE CROSS-SECTIONAL VIEW 03-11–1

FRONT AXLE OUTLINE

id031100100100

- For vehicles with ABS, the wheel hub component is integrated with the ABS wheel-speed sensor same as the previous models, for improved reliability.
- For the vehicle with DSC, the wheel hub component is not integrated with the ABS wheel-speed sensor.

FRONT AXLE CROSS-SECTIONAL VIEW

id031100100200

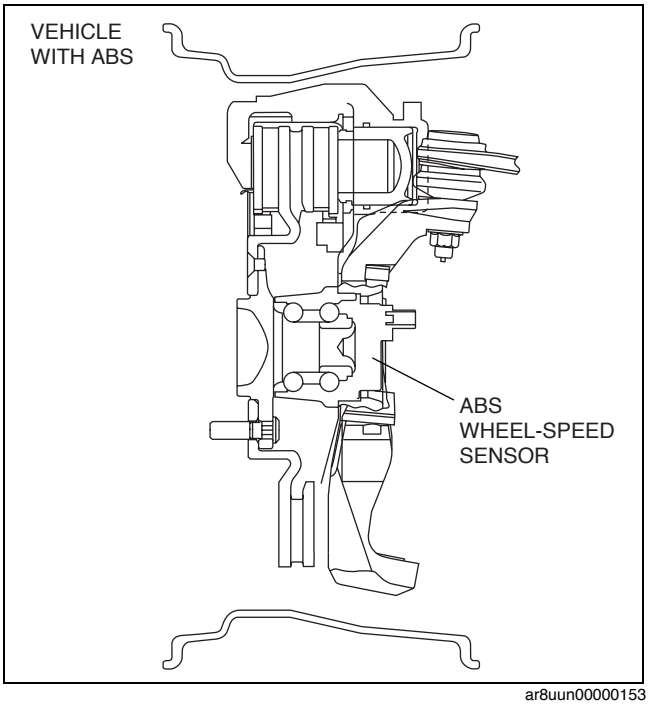

ar8uun00000153

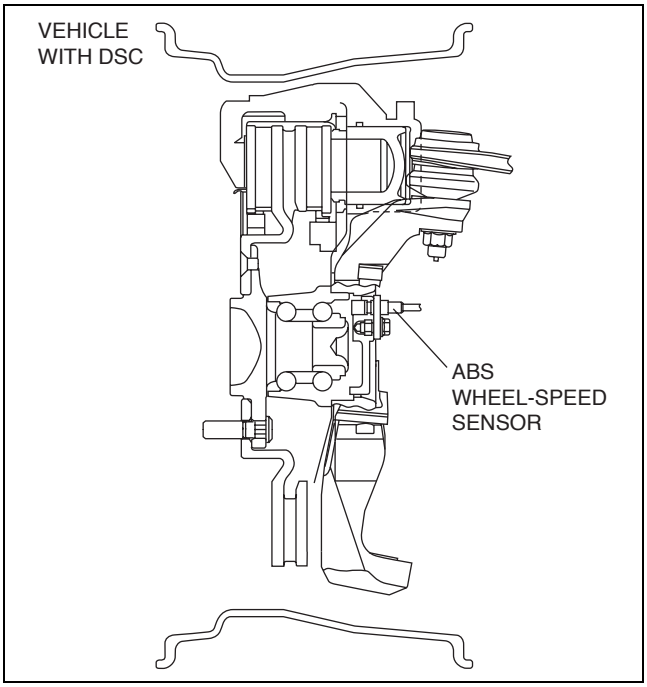

ar8uun00000367

BRAKES

04
SECTION

OUTLINE 04-00
ON-BOARD DIAGNOSTIC [DYNAMIC STABILITY CONTROL (DSC)]. 04-02
ANTILOCK BRAKE SYSTEM. 04-13
DYNAMIC STABILITY CONTROL 04-15

04-00 OUTLINE

BRAKE ABBREVIATIONS 04-00–1
BRAKE FEATURES 04-00–1
BRAKE SPECIFICATIONS 04-00–2

BRAKE ABBREVIATIONS

id040000100100

ABS	Antilock Brake System
AT	Automatic Transmission
CAN	Controller Area Network
CM	Control Module
DSC	Dynamic Stability Control
EBD	Electronic Brakeforce Distribution
HU	Hydraulic Unit
IG	Ignition
LED	Light Emitting Diode
LF	Left Front
LR	Left Rear
PID	Parameter Identification
RF	Right Front
RR	Right Rear
SW	Switch
TCS	Traction Control System

BRAKE FEATURES

id040000100200

Improved braking force	• 17-inch front brakes has been adopted on all vehicles
Improved reliability	• The Dynamic stability control (DSC) hydraulic unit (HU) /control module (CM) has been changed • Magnetic encoder type front ABS sensor rotor adopted (Vehicles with DSC) • Semi-conductor element type ABS wheel-speed sensor adopted (Vehicles with DSC) • DSC HU/CM with built-in brake fluid pressure sensor (Vehicles with DSC) • Specialized CAN communication adopted for communications between the combined sensor and the DSC HU/CM (Vehicles with DSC)
Size and weight reduction	• Integrated construction of the front wheel hub component and front ABS sensor rotor adopted (Vehicles with DSC)

BRAKE SPECIFICATIONS

id040000100300

Item		Specification	
		2009MY RX-8	2008MY RX-8
Brake pedal	Type	Suspended design	←
	Pedal lever ratio	2.8	←
	Max. stroke (mm {in})	140 {5.51}	←
Master cylinder	Type	Tandem (plunger type)	←
	Cylinder bore (mm {in})	22.22 {0.875}	←
Front brake (disc)	Type	Ventilated disc	←
	Cylinder bore (mm {in})	54.0 {2.13}	←
	Pad dimensions (area x thickness) (mm^2 x mm {in^2 x in})	4,840 x 11 {7.744 x 0.43}	←
	Disc plate dimensions (outer diameter x thickness) (mm {in})	323 x 24 {12.7 x 0.94}	Standard suspension: 303 x 24 {11.9 x 0.94} Sport suspension: 323 x 24 {12.7 x 0.94}
Rear brake (disc)	Type	Ventilated disc	←
	Cylinder bore (mm {in})	42.85 {1.687}	←
	Pad dimensions (area x thickness) (mm^2 x mm {in^2 x in})	3,330 x 9 {5.328 x 0.4}	←
	Disc plate dimensions (outer diameter x thickness) (mm {in})	302 x 18 {1.9 x 0.71}	←
Power brake unit	Type	Vacuum multiplier Single diaphragm	←
	Outer diameter (mm {in})	274 {10.8}	←
Rear wheel braking force control device	Type	EBD (Electronic brakeforce distribution)	←
Parking brake	Type	Mechanical two-rear-wheel control	←
	Operation system	Center lever type	←
Brake fluid	Type	SAE J1703, FMVSS 116 DOT3	←

04-02 ON-BOARD DIAGNOSTIC [DYNAMIC STABILITY CONTROL (DSC)]

ON-BOARD DIAGNOSTIC SYSTEM OUTLINE [DYNAMIC STABILITY CONTROL (DSC)] **04-02–1**
ON-BOARD DIAGNOSTIC SYSTEM FUNCTION [DYNAMIC STABILITY CONTROL (DSC)] **04-02–2**
Malfunction detection function **04-02–2**
Memory function **04-02–2**
Fail-safe Function. **04-02–3**
ON-BOARD DIAGNOSTIC SYSTEM PID/DATA MONITOR FUNCTION [DYNAMIC STABILITY CONTROL (DSC)] **04-02–8**
PID/DATA Monitor Table. **04-02–8**
ON-BOARD DIAGNOSTIC SYSTEM ACTIVE COMMAND MODES FUNCTION [DYNAMIC STABILITY CONTROL (DSC)] **04-02–9**
Active Command Modes Table (Vehicles with DSC) **04-02–9**
ON-BOARD DIAGNOSTIC SYSTEM EXTERNAL TESTER COMMUNICATION FUNCTION [DYNAMIC STABILITY CONTROL (DSC)] **04-02–9**
Serial communication **04-02–10**
DLC-2 CONSTRUCTION [DYNAMIC STABILITY CONTROL (DSC)] **04-02–10**

ON-BOARD DIAGNOSTIC SYSTEM OUTLINE [DYNAMIC STABILITY CONTROL (DSC)]

id0402b2175000

- The on-board diagnostic system consists of a malfunction detection system that detects malfunctions in input/output signals when the ignition is switched to ON, a PID/data monitor function that reads out specified input/output signals, and a active command modes function that allows for override operation of output parts (such as solenoid valves).
- The data link connector 2 (DLC-2), which groups together all the connectors used for malfunction diagnosis and detecting/repair into a single location, has been adopted, thereby improving serviceability.Diagnosis is performed by connecting the Mazda modular diagnostic system (M-MDS) to the DLC-2.
- In addition to DTC read-out, the Mazda modular diagnostic system (M-MDS) is used to clear DTCs using the display screen of the diagnostic tester, and to access the PID/data monitor and active command modes functions, providing enhanced malfunction diagnosis and improved serviceability.

Block diagram

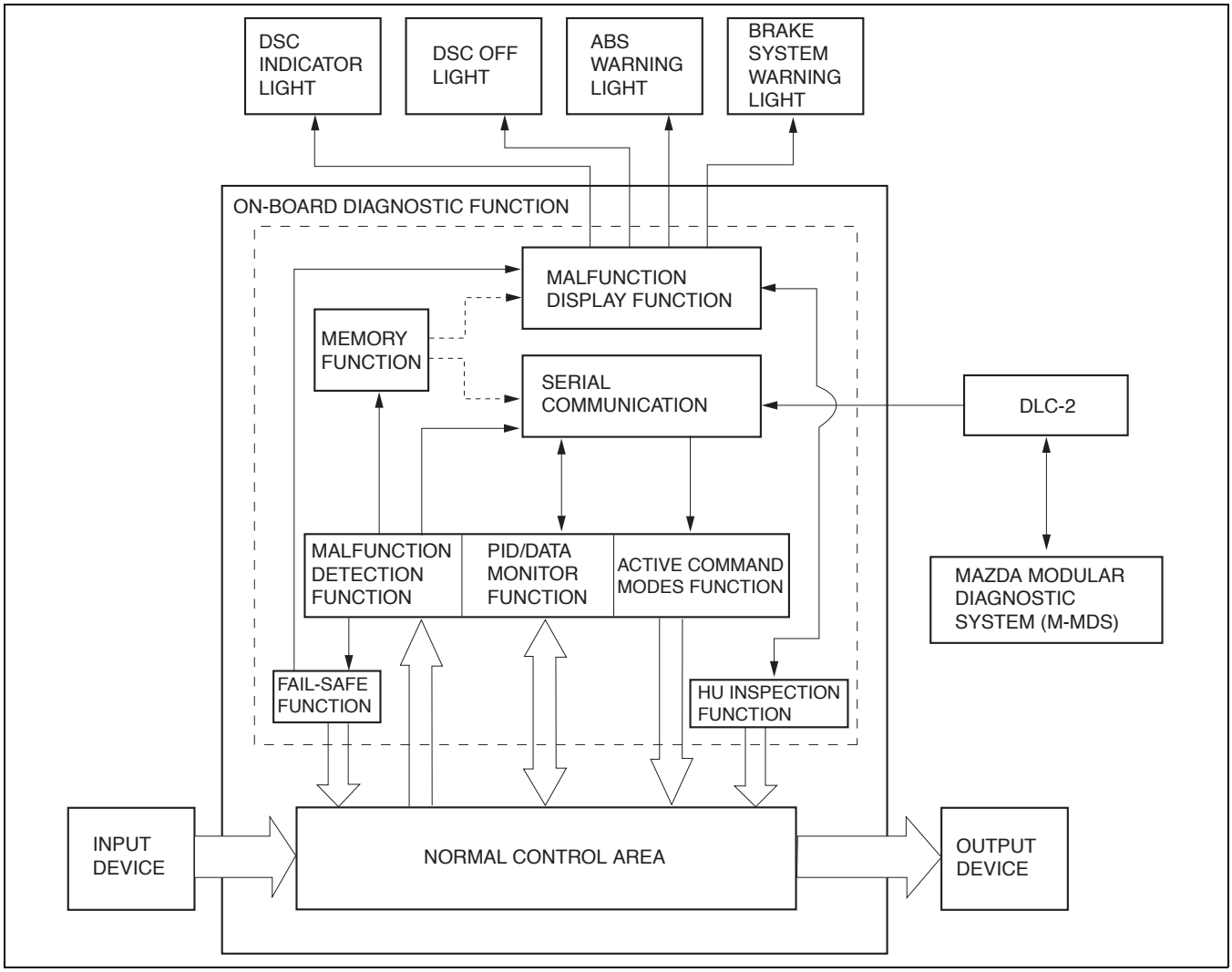

am2zzn0000064

ON-BOARD DIAGNOSTIC SYSTEM FUNCTION [DYNAMIC STABILITY CONTROL (DSC)]

id0402b2175100

Malfunction detection function

- The malfunction detection function detects and displays malfunctions in the input/output signal system of the DSC HU/CM when the ignition switch is at the ON position.
- When the DSC HU/CM is activated, the following malfunction detection is performed.
  — The ABS and brake system warning lights, DSC indicator lights and DSC OFF light illuminate for **approx. 3 s** when the ignition switch is turned to the ON position. At the same time, the fail-safe relay is operated, and the input/output signals of each part is monitored for malfunction diagnosis. After starting to drive, the first time the vehicle speed is **approx. 10 km/h {6.2 mph} or more** the pump motor is operated and malfunction diagnosis is performed again. Input/output signals are monitored for malfunction determination when the ignition is switched to ON.
- If the above malfunctions are detected, the corresponding lights are illuminated to alert the driver. DTCs can be output through the CAN_H and CAN_L of the DLC-2 using the external tester communication function. At the same time, malfunction detection results are sent to the memory and fail-safe functions.

Memory function

- The memory function stores DTCs of malfunctions in input/output signal systems. With this function, once a DTC is stored it is not cleared after the ignition switch has been turned off (LOCK position), even if the malfunctioning signal system has returned to normal.
- Since the DSC HU/CM has a built-in non-volatile memory, DTCs are not cleared even if the battery is removed. Therefore, it is necessary to clear the memory after performing repairs. Refer to the Workshop Manual for the DTC clearing procedure.

Fail-safe Function

- When the malfunction detection function determines a malfunction, each light illuminates to advise the driver. At this time, the fail-safe function controls the ABS, EBD, TCS and DSC as shown in the fail-safe function malfunction contents table.

Warning

- **If EBD control is prohibited the rear wheels could lock-up before the front wheels.If this occurs, the vehicle could yaw and become unstable. Therefore always inspect the system immediately if EBD control is prohibited.**

Fail-safe Function Malfunction Contents

Malfunction location	DTC number	Fail-safe function								
		Warning light illumination status				Control status				
								TCS control		
	Mazda Modular Diagnostic System (M-MDS) display	ABS warning light	Brake system warning light (when parking brake is released)	DSC indicator light	DSC OFF light	ABS control	EBD control	Brake control	Engine control	DSC control
Power supply system	B1317	Illuminated	Illuminated	Illuminated	Not illuminated	Control disabled	Control disabled	Control disabled	Control disabled	Control disabled
	B1318	Illuminated *1	Not illuminated *2	Illuminated *1		Control disabled *3	Control enabled *4	Control disabled *3	Control disabled *3	Control disabled *3
DSC HU/CM system	B1342	Illuminated	Illuminated	Illuminated	Not illuminated	Control disabled	Control disabled	Control disabled	Control disabled	Control disabled
Brake switch system	B1484	Illuminated *5	Not illuminated	Illuminated	Not illuminated	Control disabled *6	Control enabled	Control disabled *6	Control disabled *6	Control disabled
	C1954									
DSC HU/CM configuration	B2477	Illuminated *7	Not illuminated	Illuminated *7	Not illuminated	Control disabled	Control enabled	Control disabled	Control disabled	Control disabled
Combined sensor system	B2741	Not illuminated	Not illuminated	Illuminated	Not illuminated	Control enabled	Control enabled	Control disabled *8	Control disabled *8	Control disabled
	C2768									
	U2516									
DSC OFF switch system	C1093	Not illuminated	Not illuminated	Illuminated	Illuminated	Control enabled	Control enabled	Control disabled	Control disabled	Control disabled
Pump motor, motor relay systems	C1095	Illuminated	Illuminated	Illuminated	Not illuminated	Control disabled	Control enabled	Control disabled	Control disabled	Control disabled
	C1096									
LF ABS sensor rotor	C1141	Illuminated	Not illuminated	Illuminated	Not illuminated	Control disabled *9	Control enabled	Control disabled	Control disabled	Control disabled
RF ABS sensor rotor	C1142									
LR ABS sensor rotor	C1143									
RR ABS sensor rotor	C1144									

Malfunction location	DTC number	Fail-safe function								
		Warning light illumination status				Control status				
								TCS control		
	Mazda Modular Diagnostic System (M-MDS) display	ABS warning light	Brake system warning light (when parking brake is released)	DSC indicator light	DSC OFF light	ABS control	EBD control	Brake control	Engine control	DSC control
RF ABS wheel-speed sensor system	C1145	Illuminated	Not illuminated	Illuminated	Not illuminated	Control disabled *9	Control enabled	Control disabled	Control disabled	Control disabled
LF ABS wheel-speed sensor system	C1155									
RR ABS wheel-speed sensor system	C1165									
LR ABS wheel-speed sensor system	C1175									
RF ABS wheel-speed sensor/ABS sensor rotor systems	C1148	Illuminated	Not illuminated	Illuminated	Not illuminated	Control disabled *9	Control enabled	Control disabled	Control disabled	Control disabled
LF ABS wheel-speed sensor/ABS sensor rotor systems	C1158									
RR ABS wheel-speed sensor/ABS sensor rotor systems	C1168									
LR ABS wheel-speed sensor/ABS sensor rotor systems	C1178									
Valve relay system	C1186	Illuminated	Illuminated	Illuminated	Not illuminated	Control disabled	Control disabled	Control disabled	Control disabled	Control disabled
	C1266		Not illuminated				Control enabled			

Malfunction location	DTC number	Fail-safe function								
		Warning light illumination status				Control status				
								TCS control		
	Mazda Modular Diagnostic System (M-MDS) display	ABS warning light	Brake system warning light (when parking brake is released)	DSC indicator light	DSC OFF light	ABS control	EBD control	Brake control	Engine control	DSC control
LF outlet solenoid valve system	C1194	Illuminated	Illuminated	Illuminated	Not illuminated	Control disabled	Control disabled	Control disabled	Control disabled	Control disabled
LF inlet solenoid valve system	C1198									
RF outlet solenoid valve system	C1210									
RF inlet solenoid valve system	C1214									
LR outlet solenoid valve system	C1242									
RR outlet solenoid valve system	C1246									
LR inlet solenoid valve system	C1250									
RR inlet solenoid valve system	C1254									
RH traction control solenoid valve system	C1400									
LH traction control solenoid valve system	C1410									
RH stability control solenoid valve system	C1957									
LH stability control solenoid valve system	C1958									

Malfunction location	DTC number	Fail-safe function								
		Warning light illumination status				Control status				
								TCS control		
	Mazda Modular Diagnostic System (M-MDS) display	ABS warning light	Brake system warning light (when parking brake is released)	DSC indicator light	DSC OFF light	ABS control	EBD control	Brake control	Engine control	DSC control
ABS wheel-speed sensor (slip monitor) system	C1222	Illuminated	Illuminated *10	Illuminated	Not illuminated	Control disabled *11	Control disabled *12	Control disabled	Control disabled	Control disabled
LF ABS wheel-speed sensor system	C1233	Illuminated	Not illuminated	Illuminated	Not illuminated	Control disabled *9	Control enabled	Control disabled	Control disabled	Control disabled
RF ABS wheel-speed sensor system	C1234									
RR ABS wheel-speed sensor system	C1235									
LR ABS wheel-speed sensor system	C1236									
Combined sensor system	C1279	Not illuminated	Not illuminated	Illuminated	Not illuminated	Control enabled	Control enabled	Control disabled *8	Control disabled *8	Control disabled
	C1280			Illuminated *13				Control disabled *8, 14	Control disabled *8, 14	Control disabled *14
	C1281			Illuminated				Control disabled *8	Control disabled *8	Control disabled
	C1952			Illuminated *15				Control disabled *8, 16	Control disabled *8, 16	
	C1959			Illuminated				Control disabled *8	Control disabled *8	
Brake fluid pressure sensor system	C1290	Illuminated *17	Not illuminated	Illuminated	Not illuminated	Control disabled *9	Control enabled	Control disabled *8	Control disabled *8	Control disabled
	C1953									
Steering angle sensor system	C1295	Not illuminated	Not illuminated	Illuminated	Not illuminated	Control enabled	Control enabled	Control disabled *8	Control disabled *8	Control disabled
	C1307									
	C1937									
	C1938			Illuminated *13				Control disabled *8, 14	Control disabled *8, 14	Control disabled *14
	C1956			Illuminated				Control disabled *8	Control disabled *8	Control disabled

Malfunction location	DTC number	Fail-safe function								
		Warning light illumination status				Control status				
								TCS control		
	Mazda Modular Diagnostic System (M-MDS) display	ABS warning light	Brake system warning light (when parking brake is released)	DSC indicator light	DSC OFF light	ABS control	EBD control	Brake control	Engine control	DSC control
Steering angle sensor (abnormal initialization) system	C1306	Not illuminated	Not illuminated	Illuminated	Flash	Control enabled	Control enabled	Control disabled *8	Control disabled *8	Control disabled
DSC control system	C1994	Illuminated	Not illuminated	Illuminated	Not illuminated	Control disabled	Control enabled	Control disabled	Control disabled	Control disabled
CAN communication system	U0073	Not illuminated	Not illuminated	Illuminated	Not illuminated	Control enabled	Control enabled	Control disabled	Control disabled	Control disabled
	U0100									
	U0101									
	U0155									
	U1900									
	U2023									
CAN2 communication system	U0074	Not illuminated	Not illuminated	Illuminated	Not illuminated	Control enabled	Control enabled	Control disabled *8	Control disabled *8	Control disabled
	U0123									
	U1901									

*1 : If the ignition voltage returns to normal, the light turns off.
*2 : If the ignition voltage is **less than 7.6 V**, the light illuminates. Afterwards, if the ignition voltage returns to normal, the light turns off.
*3 : If the ignition voltage returns to normal, control is enabled.
*4 : If the ignition voltage is **less than 7.6 V**, control is disabled. Afterwards, if the ignition voltage returns to normal, control is enabled.
*5 : If an error is detected during the ABS/TCS control, the light illuminates after finishing the control.
*6 : If an error is detected during the ABS/TCS control, the control is disabled after finishing the control.
*7 : If the configuration data is not within the specification, the light flashes.
*8 : If an error is detected during the TCS control, the control is disabled after finishing the control.
*9 : If an error is detected during the ABS control, the control is disabled after finishing the control.
*10 : If an abnormal cornering direction is detected, the light does not illuminate.
*11 : If an abnormal cornering direction is detected during the ABS control, the control is disabled after finishing the control.
*12 : If an abnormal cornering direction is detected, the control is not disabled.
*13 : When an abnormal cornering direction is detected, the light turns off if the normal condition is verified the next time the system is activated.
*14 : When an abnormal cornering direction is detected, control is enabled if the normal condition is verified the next time the system is activated.
*15 : If the system returns to normal, the light turns off. However, if another error is detected within **180 s**, the light remains illuminated until the ignition switch is turned off.
*16 : If the system returns to normal, control is enabled. However, if another error is detected within **180 s**, control is disabled until the ignition switch is turned off.
*17 : If an error is detected during the ABS control, the light illuminates after finishing the control.

ON-BOARD DIAGNOSTIC SYSTEM PID/DATA MONITOR FUNCTION [DYNAMIC STABILITY CONTROL (DSC)]

id0402b2175200

- The PID/data monitor function is used for optionally selecting input/output signal monitor items preset in the DSC HU/CM and reading them out in real-time.

PID/DATA Monitor Table

PID/data monitor item	Input/output part	Unit/Condition (Tester display)
ABS_VOLT	Battery	V
ABSLF_I	LF inlet solenoid valve	Off/On
ABSLF_O	LF outlet solenoid valve	Off/On
ABSLR_I	LR inlet solenoid valve	Off/On
ABSLR_O	LR outlet solenoid valve	Off/On
ABSPMPRLY	Pump motor relay	Off/On
ABSRF_I	RF inlet solenoid valve	Off/On
ABSRF_O	RF outlet solenoid valve	Off/On
ABSRR_I	RR inlet solenoid valve	Off/On
ABSRR_O	RR outlet solenoid valve	Off/On
ABSVLVRLY	Valve control relay	Off/On
BOO_ABS	Brake switch	Off/On
CCNTABS	Number of continuous DTCs	—
LAT_ACCL	Combined sensor (lateral-G value)	G
LF_WSPD	LF ABS wheel-speed sensor	KPH, MPH
LR_WSPD	LR ABS wheel-speed sensor	KPH, MPH
MCYLI P	Brake fluid pressure sensor	Pa, psi
PMP_MOTOR	Pump motor	Off/On
RF_WSPD	RF ABS wheel-speed sensor	KPH, MPH
RPM	PCM (engine speed)	RPM
RR_WSPD	RR ABS wheel-speed sensor	KPH, MPH
SWA_POS	Steering angle sensor	°
TPI	PCM (throttle opening angle)	%
V_STB_L	LH stability control solenoid valve	Off/On
V_STB_R	RH stability control solenoid valve	Off/On
V_TRC_L	LH traction control solenoid valve	Off/On
V_TRC_R	RH traction control solenoid valve	Off/On
YAW_RATE	Combined sensor (yaw rate value)	°/s

ON-BOARD DIAGNOSTIC SYSTEM ACTIVE COMMAND MODES FUNCTION [DYNAMIC STABILITY CONTROL (DSC)]

id0402b2175300

- The active command modes function is used for optionally selecting active command modes items of input/output parts preset in the DSC HU/CM, and to operate them regardless of CM control.
- To protect the hydraulic unit interior, operate output related parts for only **10 s or less** when using the active command modes function.

Active Command Modes Table (Vehicles with DSC)

Command name	Output part name	Operation	Operation condition
LATACCEL	Combined sensor (lateral acceleration) initialization	FALSE/TRUE	Ignition switch at ON
LF_INLET	LF inlet solenoid valve	Off/On	
LF_OUTLET	LF outlet solenoid valve		
LR_INLET	LR inlet solenoid valve		
LR_OUTLET	LR outlet solenoid valve		
PMP_MOTOR	Pump motor		
RF_INLET	RF inlet solenoid valve		
RF_OUTLET	RF outlet solenoid valve		
RR_INLET	RR inlet solenoid valve		
RR_OUTLET	RR outlet solenoid valve		
SAS_CAL	Steering angle sensor initialization	FALSE/TRUE	
STAB_IND	DSC indicator light	Off/On	
TRAC_OFF	DSC OFF switch		
V_STB_L	LH stability control solenoid valve		
V_STB_R	RH stability control solenoid valve		
V_TRC_L	LH traction control solenoid valve		
V_TRC_R	RH traction control solenoid valve		
YAWRATE	Combined sensor (yaw rate) initialization		

ON-BOARD DIAGNOSTIC SYSTEM EXTERNAL TESTER COMMUNICATION FUNCTION [DYNAMIC STABILITY CONTROL (DSC)]

id0402b2821500

- The external tester communication function enables communication of diagnostic data (DTC read-outs, input/output signal read-outs, operation of input/output parts) between the DSC HU/CM and an external tester.

Connections/Communication Contents

	External tester	
	Mazda Modular Diagnostic System (M-MDS)	
	Connection	Communication method
On-board diagnostic (malfunction detection) function	Input/output: CAN_H (HS), CAN_L (HS) terminals	Serial communication
PID/data monitor function	Input/output: CAN_H (HS), CAN_L (HS) terminals	Serial communication
active command modes function	Input/output: CAN_H (HS), CAN_L (HS) terminals	Serial communication

Serial communication

- Serial communication (two-way communication) allows for multiple data to be sent and received instantly along the same line.
- By connecting the Mazda Modular Diagnostic System (M-MDS) to the DLC-2, diagnostic data can be sent and received between the Mazda Modular Diagnostic System (M-MDS) and the DSC HU/CM using the CAN_H and CAN_L terminals (within the DLC-2).
- The DSC HU/CM receives the command signals of the malfunction detection function, PID/data monitor function, and the active command modes function based on the Mazda Modular Diagnostic System (M-MDS), and sends DTCs and data regarding the operating condition and status of each input/output part to the Mazda Modular Diagnostic System (M-MDS).

Diagnostic function name	Signal received	Signal sent
Malfunction detection function	DTC verification signal	DTC
PID/data monitor function	Command signal to read selected monitor item	Monitored data for requested monitor item
active command modes function	Operation command signal for selected active command modes item	Output part drive signal

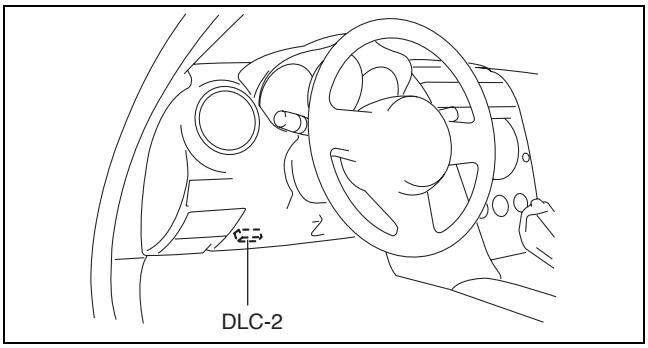

ar8uuw00001791

DLC-2 CONSTRUCTION [DYNAMIC STABILITY CONTROL (DSC)]

id0402b2180800

- A connector (DLC-2) conforming to International Organization for Standardization (ISO) standards has been added.
- Shape and terminal arrangement as stipulated by the ISO 15031-3 (SAE J1962) international standard has been adopted for this connector.The 16-pin connector consists of a CAN_H (HS) terminal, CAN_L (HS) terminal, CAN_H (MS) terminal, CAN_L (MS) terminal, GND1 terminal, GND2 terminal, and B+ terminal.

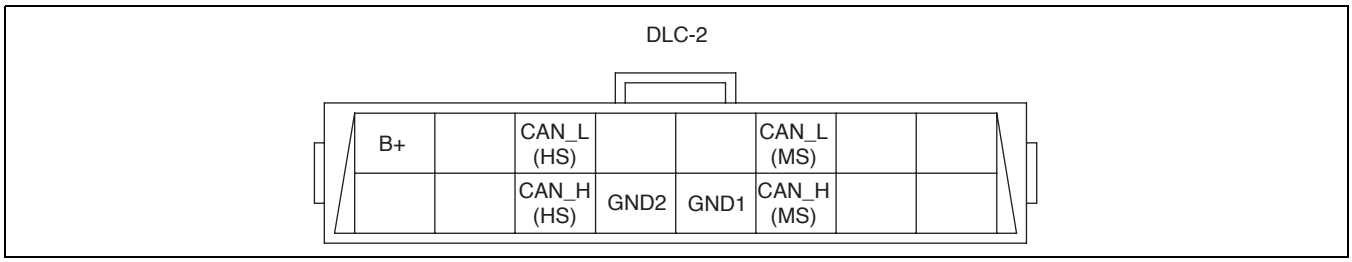

am2zzn0000064

Terminal	Function
CAN_L (HS)	Serial communication Lo terminal (HS)
CAN_H (HS)	Serial communication Hi terminal (HS)
CAN_L (MS)	Serial communication Lo terminal (MS)
CAN_H (MS)	Serial communication Hi terminal (MS)
GND1	Body ground terminal
GND2	Serial communication ground terminal
B+	Battery power supply terminal

04-13 ANTILOCK BRAKE SYSTEM

ABS OUTLINE. 04-13–1
ABS SYSTEM WIRING DIAGRAM. 04-13–1

ABS OUTLINE

id041300183600

- The hydraulic pressure control mechanism in the ABS hydraulic unit (HU) and the system control strategy and essentially carried over from that of the 2008MY RX-8, except for the following;
  — Name of fuse for ABS system changed
  — Changed brake lights to light emitting diode (LED) type lights

ABS SYSTEM WIRING DIAGRAM

id041300185000

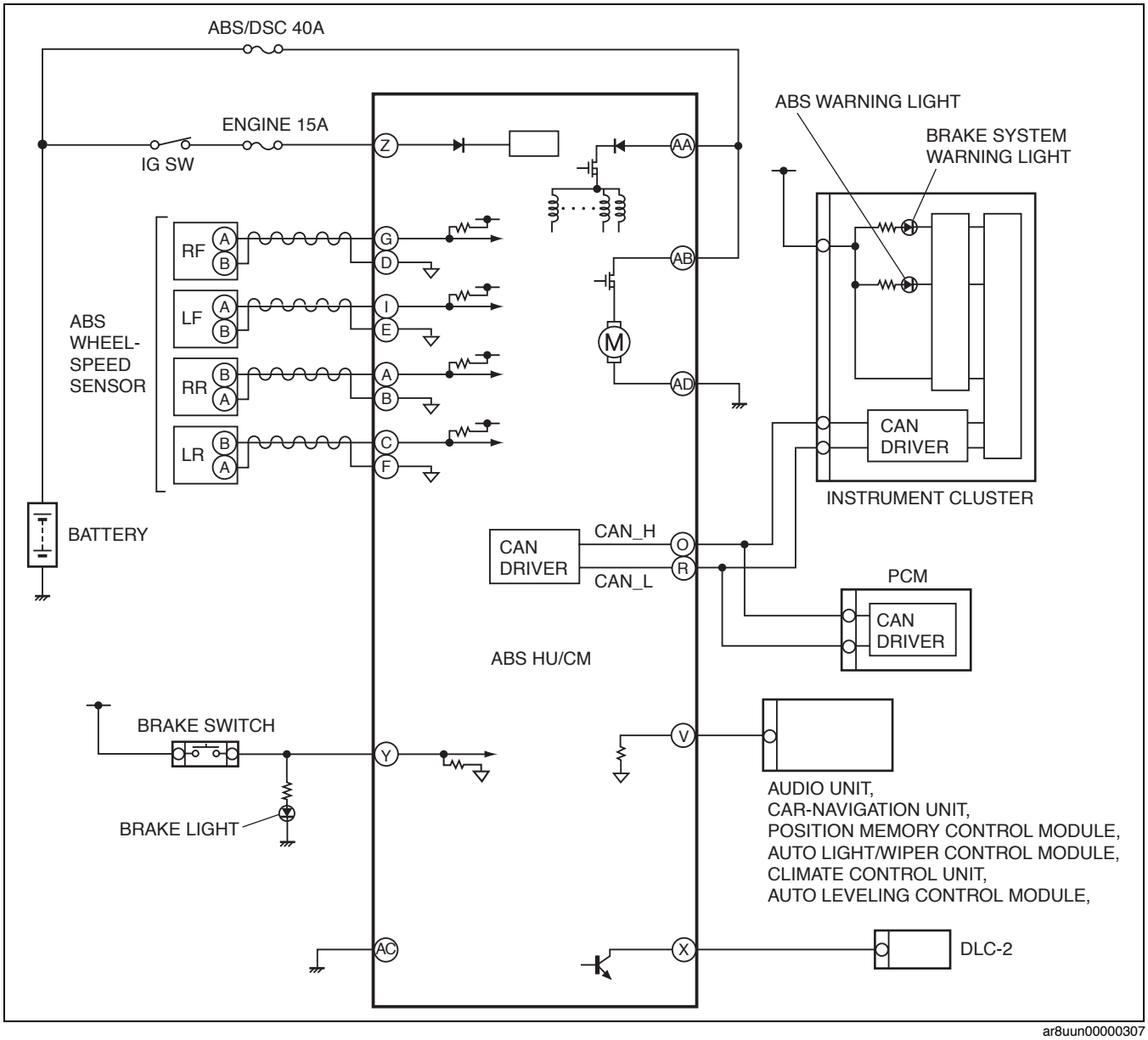

ar8uun00000307

04-15 DYNAMIC STABILITY CONTROL

DYNAMIC STABILITY CONTROL (DSC) STRUCTURAL VIEW 04-15–1
DYNAMIC STABILITY CONTROL (DSC) CONSTRUCTION 04-15–2
DYNAMIC STABILITY CONTROL (DSC) SYSTEM WIRING DIAGRAM 04-15–3
DSC HU/CM CONSTRUCTION. 04-15–4
DSC HU PART CONSTRUCTION/OPERATION 04-15–5
Construction. **04-15–5**
Operation **04-15–6**
TCS CONTROL OUTLINE 04-15–10
Features. **04-15–10**
Block Diagram **04-15–10**
ABS WHEEL-SPEED SENSOR AND ABS SENSOR ROTOR FUNCTION . . . 04-15–10
ABS WHEEL-SPEED SENSOR AND ABS SENSOR ROTOR CONSTRUCTION/OPERATION 04-15–11
Construction **04-15–11**
Operation **04-15–12**
COMBINED SENSOR CONSTRUCTION/OPERATION 04-15–13
BRAKE FLUID PRESSURE SENSOR CONSTRUCTION 04-15–13
STEERING ANGLE SENSOR FUNCTION 04-15–13

DYNAMIC STABILITY CONTROL (DSC) STRUCTURAL VIEW

id041500100400

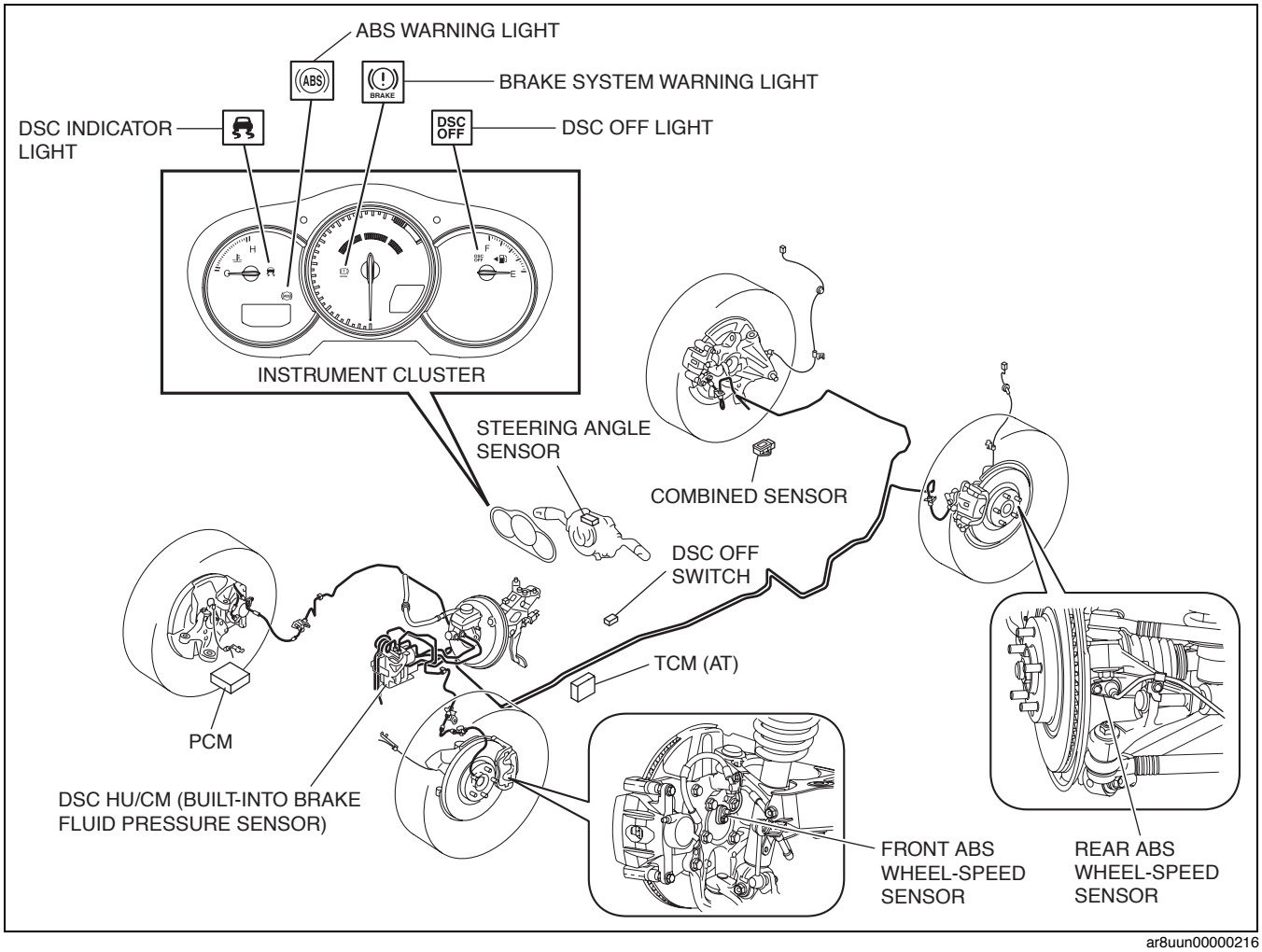

ar8uun00000216

DYNAMIC STABILITY CONTROL (DSC) CONSTRUCTION

id041500100500

- The DSC system consists of the following parts. While each part has a regular function in other systems, only the function during DSC control is listed.

Part name	Function
DSC HU/CM	• Makes calculations using input signals from each sensor, controls brake fluid pressure to each wheel, and actuates each function (ABS, EBD, TCS and DSC) of the DSC system. • Outputs the vehicle speed signal to the car-navigation unit. • Outputs the torque reduction request signal, vehicle speed signal and DSC system warning control data via CAN lines. • Controls the on-board diagnostic system and fail-safe function when there is a malfunction in the DSC system.
PCM	• Controls engine output based on signals from the DSC HU/CM. • Transmits engine speed, tire and shift position data via CAN communication to the DSC HU/CM.
TCM (AT)	• Transmits gear/selector lever target position data via CAN communication to the DSC HU/CM.
DSC indicator light	• Informs the driver that the DSC is operating (vehicle sideslip occurring). • Informs the driver that the TCS is operating (drive wheel is spinning).
DSC OFF switch	• Transmits driver intention to release DSC control to the DSC HU/CM.
DSC OFF light	• Informs driver that DSC control has been released due to DSC OFF switch operation.
Wheel speed sensor	• Detects the rotation condition of each wheel and transmits it to the DSC HU/CM.
Combined sensor	• Detects the lateral-G (vehicle speed increase) and the yaw rate (vehicle turning angle) of the vehicle and transmits them to the DSC HU/CM.
Brake fluid pressure sensor (built-into DSC HU/CM)	• Detects the fluid pressure from the master cylinder and transmits it to the DSC HU/CM.
Steering angle sensor	• Transmits the steering angle and steering angle sensor condition via CAN lines to the DSC HU/CM.

DYNAMIC STABILITY CONTROL (DSC) SYSTEM WIRING DIAGRAM

id041500100600

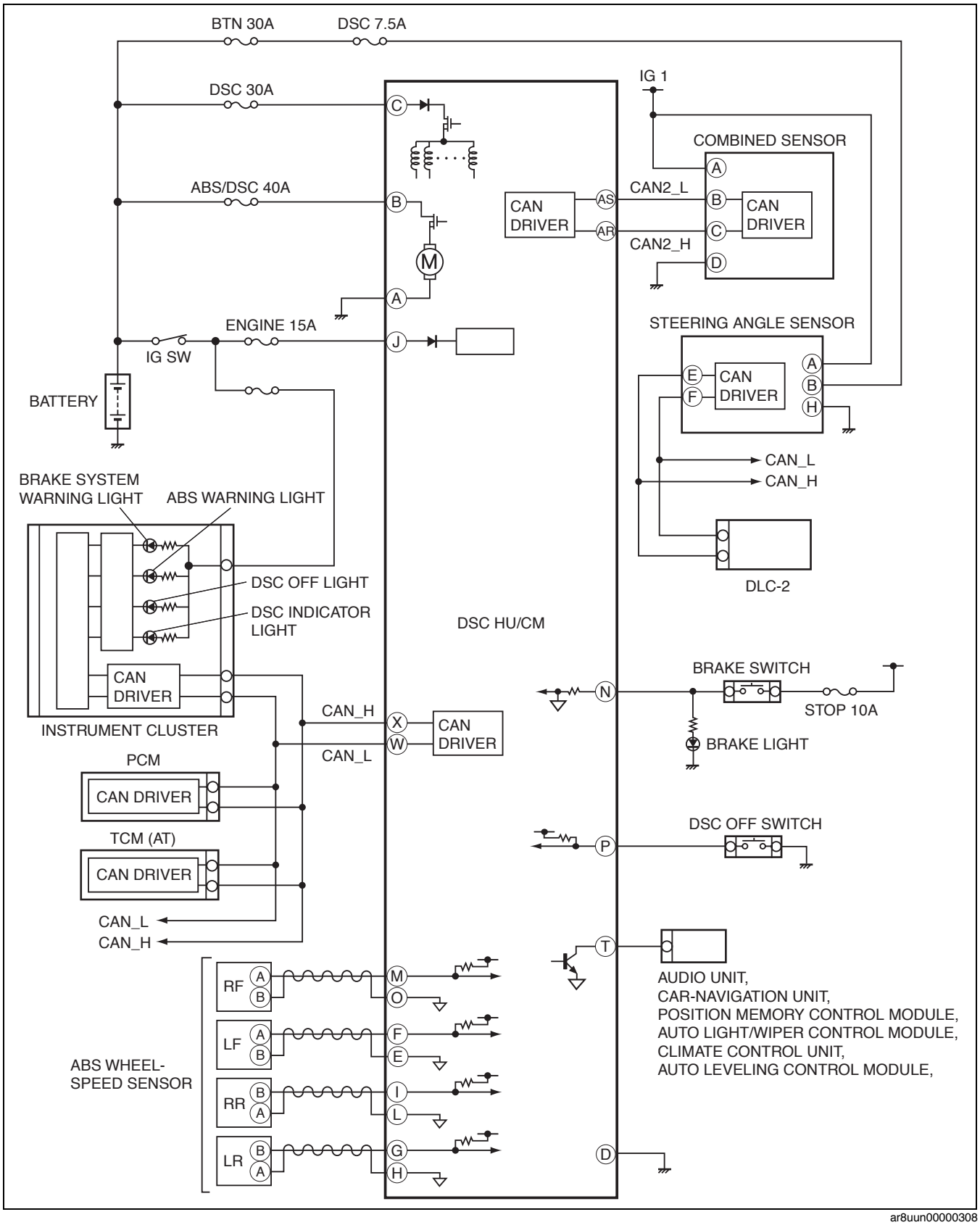

ar8uun00000308

DSC HU/CM CONSTRUCTION

- A high reliability, reduced size and weight DSC HU/CM, integrating both the DSC HU and the DSC CM, has been adopted.

id041500100700

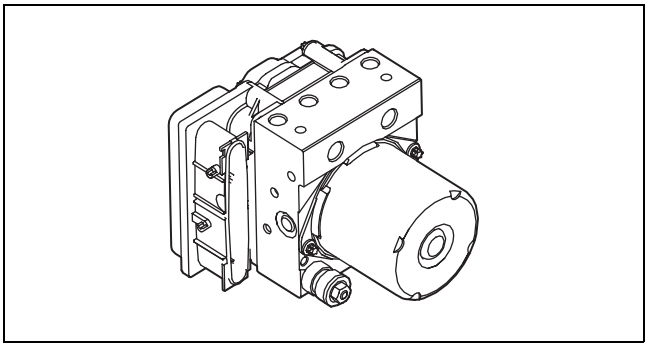

ar8uun00000048

DSC HU PART CONSTRUCTION/OPERATION

id041500100900

Construction

Function of main component parts

Part name	Function
Inlet solenoid valve	• Adjusts the fluid pressure in each brake system according to DSC HU/CM signals.
Outlet solenoid valve	• Adjusts the fluid pressure in each brake system according to DSC HU/CM signals.
Stability control solenoid valve	• Switches the brake hydraulic circuits during and according to normal braking, ABS and EBD control, TCS control and DSC control.
Traction control solenoid valve	• Switches the brake hydraulic circuits during and according to normal braking, ABS and EBD control, TCS control and DSC control.
Reservoir	• Temporarily stores brake fluid from the caliper piston to ensure smooth pressure reduction during ABS and EBD control, TCS control and DSC control.
Pump	• Returns the brake fluid stored in the reservoir to the master cylinder during ABS and DSC control. • Increases brake fluid pressure and sends brake fluid to each caliper piston during TCS control and DSC control.
Pump motor	• Operates the pump according to DSC HU/CM signals.

Hydraulic circuit diagram

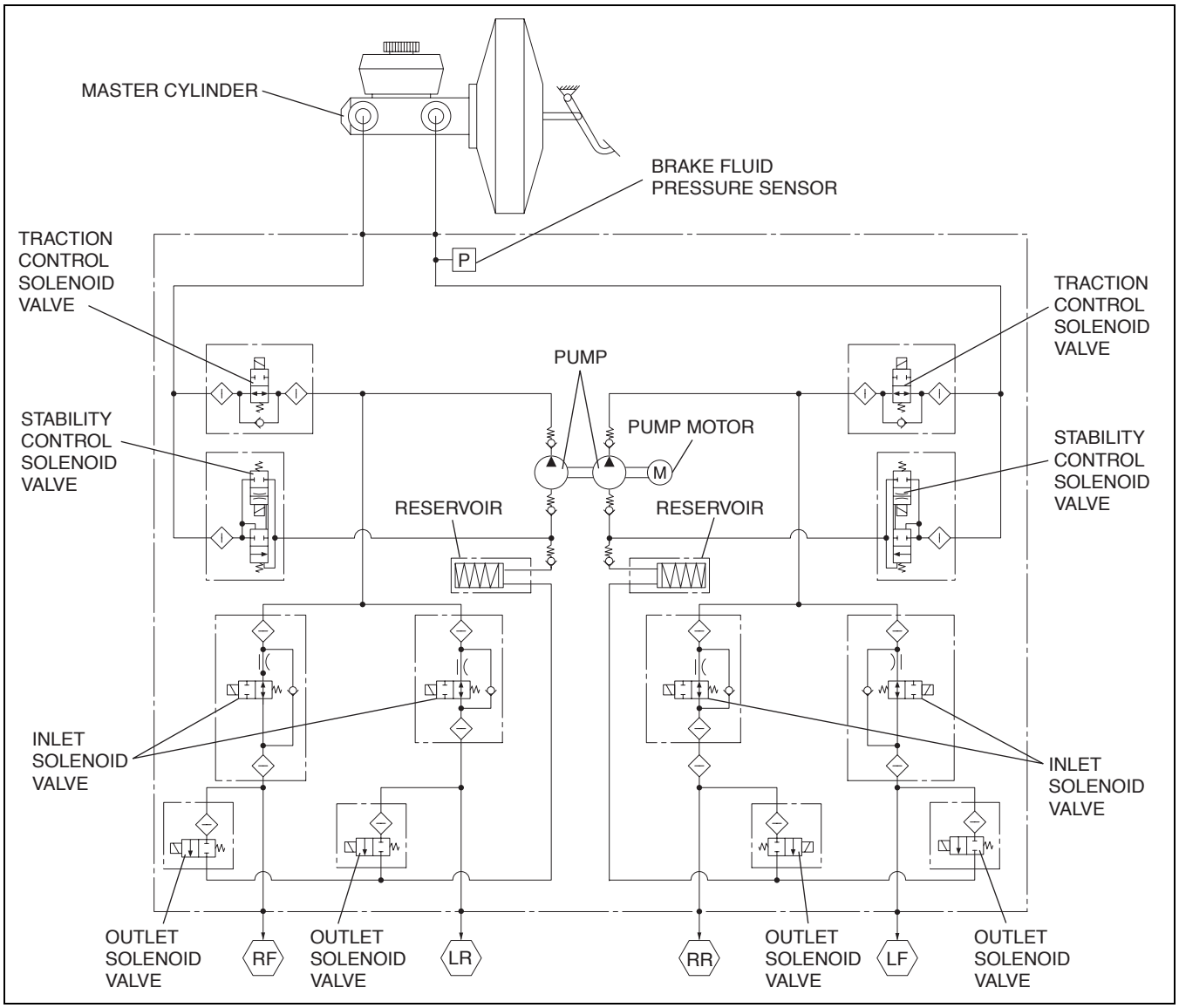

ar8uun00000265

Operation

During normal braking

- During normal braking, the solenoid valves are not energized and all of them are off. When the brake pedal is depressed, brake fluid pressure is transmitted from the master cylinder, through the traction switch and inlet solenoid valves, and then to the caliper piston.

Solenoid Valve Operation Table

Traction control solenoid valve		Stability control solenoid valve		Inlet solenoid valve				Outlet solenoid valve				Pump motor, pump
LF—RR	RF—LR	LF—RR	RF—LR	LF	RF	LR	RR	LF	RF	LR	RR	
OFF (open)		OFF (closed)		OFF (open)				OFF (closed)				Stopped

Hydraulic circuit diagram

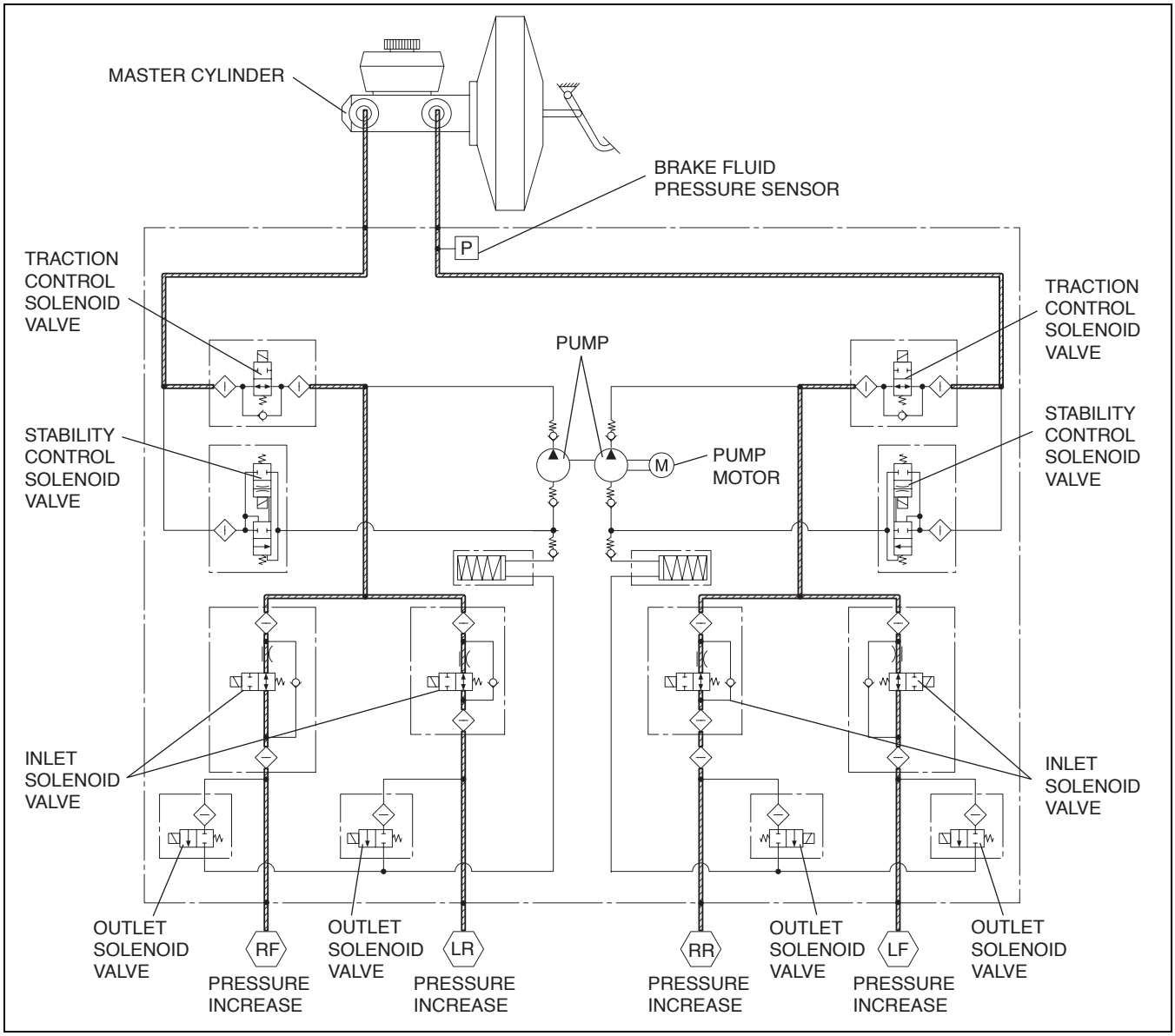

ar8uun00000266

During ABS and EBD control

- During ABS and EBD control, when wheel lock-up is about to occur, the traction switch and stability control solenoid valves are not energized, and the inlet and outlet solenoid valves are energized and controlled in three pressure modes (increase, reduction or maintain), thereby adjusting brake fluid pressure. Brake fluid during pressure reduction is temporarily stored in the reservoir and afterwards the pump motor operates the pump to return the fluid to the master cylinder. (The following figure shows these conditions: right front wheel pressure increased, left front wheel pressure maintained, and both rear wheels pressure decreased.)

Solenoid valve operation table

	Traction control solenoid valve		Stability control solenoid valve		Inlet solenoid valve				Outlet solenoid valve				Pump motor, pump
	LF—RR	RF—LR	LF—RR	RF—LR	LF	RF	LR	RR	LF	RF	LR	RR	
During Pressure increase mode	OFF (open)		OFF (closed)		OFF (open)				OFF (closed)				Stopped
During pressure maintain mode	OFF (open)		OFF (closed)		ON (closed)				OFF (closed)				Stopped
During pressure reduction mode	OFF (open)		OFF (closed)		ON (closed)				ON (open)				Operating

Hydraulic circuit diagram

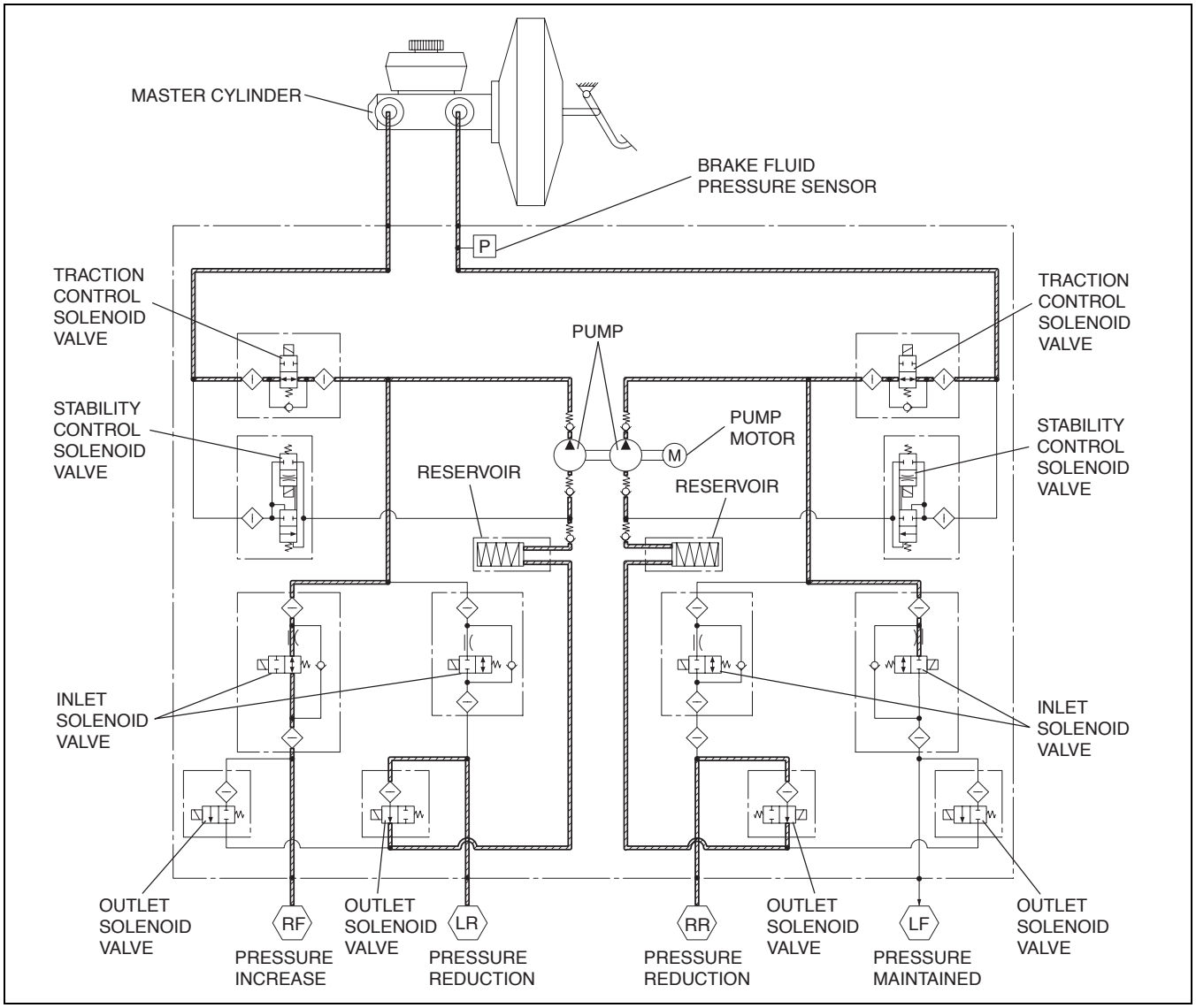

ar8uun00000267

During DSC control (suppress oversteer tendency)

- When a large oversteer tendency is determined, the traction switch and the stability control solenoid valves are energized, switching the hydraulic circuits. At the same time, the pump motor is actuated to operate the pump, supplying brake fluid pressure from the reservoir to the outer front wheel cylinder. Also at this time, the inlet solenoid valve of the inner rear wheel is energized and the hydraulic circuit of this wheel is closed.
- After a pressure increase, brake fluid pressure is adjusted using the three pressure modes (reduction, maintain, increase) so that the target wheel speed is obtained. (The following figure shows a left turn (during pressure increase mode).)

Solenoid valve operation table

	Traction control solenoid valve		Stability control solenoid valve		Inlet solenoid valve				Outlet solenoid valve				Pump motor, pump
	LF—RR	RF—LR	LF—RR	RF—LR	LF	RF	LR	RR	LF	RF	LR	RR	
During pressure increase mode	OFF (open)	ON (closed)	OFF (closed)	ON (open)	OFF (open)	OFF (open)	ON (closed)	OFF (open)	OFF (closed)		ON (open)	OFF (closed)	Operating
During pressure maintain mode	OFF (open)	ON (closed)	OFF (closed)		OFF (open)	OFF (open)	ON (closed)	OFF (open)	OFF (closed)		ON (open)	OFF (closed)	Operating
During pressure reduction mode	OFF (open)	ON (closed)	OFF (closed)		OFF (open)	OFF (open)	ON (closed)	OFF (open)	OFF (closed)	ON (open)	ON (open)	OFF (closed)	Operating

Hydraulic circuit diagram

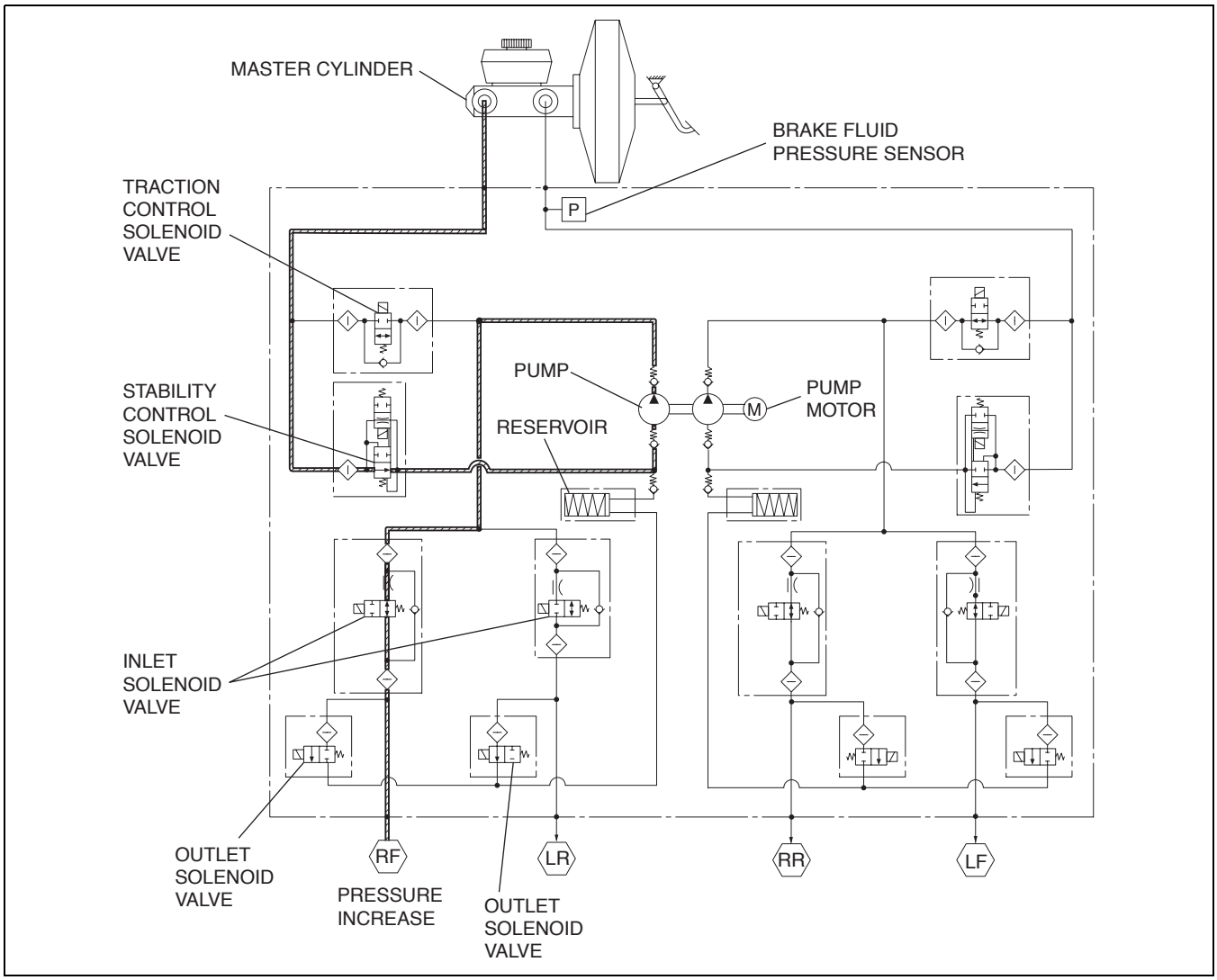

ar8uun00000268

During DSC control (to suppress understeer tendency) and TCS control

- When a large understeer tendency is determined, the traction switch and the stability control solenoid valves are energized, switching the hydraulic circuits. At the same time, the pump motor is actuated to operate the pump, thereby increasing pressure by supplying brake fluid pressure to the caliper piston of the inner rear wheel or the slipping driving wheel. Also at this time, the inlet solenoid valve of the outer front wheel is energized and the hydraulic circuit of this wheel is closed.
- After a pressure increase, brake fluid pressure is adjusted using the three pressure modes (reduction, maintain, increase) so that the target wheel speed is obtained. (The following figure shows a left turn, or control of left rear wheel spin (during pressure increase mode).)

Solenoid valve operation table

	Traction control solenoid valve		Stability control solenoid valve		Inlet solenoid valve				Outlet solenoid valve				Pump motor, pump
	LF—RR	RF—LR	LF—RR	RF—LR	LF	RF	LR	RR	LF	RF	LR	RR	
During pressure increase mode	OFF (open)	ON (closed)	OFF (closed)	ON (open)	OFF (open)	ON (closed)	OFF (open)		OFF (closed)	ON (open)	OFF (closed)		Operating
During pressure maintain mode	OFF (open)	ON (closed)	OFF (closed)		OFF (open)	OFF (closed)	ON (closed)	OFF (open)	OFF (closed)	ON (open)	OFF (closed)		Operating
During pressure reduction mode	OFF (open)	ON (closed)	OFF (closed)		OFF (open)	OFF (closed)	ON (closed)	OFF (open)	OFF (closed)	ON (open)	ON (open)	OFF (closed)	Operating

Hydraulic circuit diagram

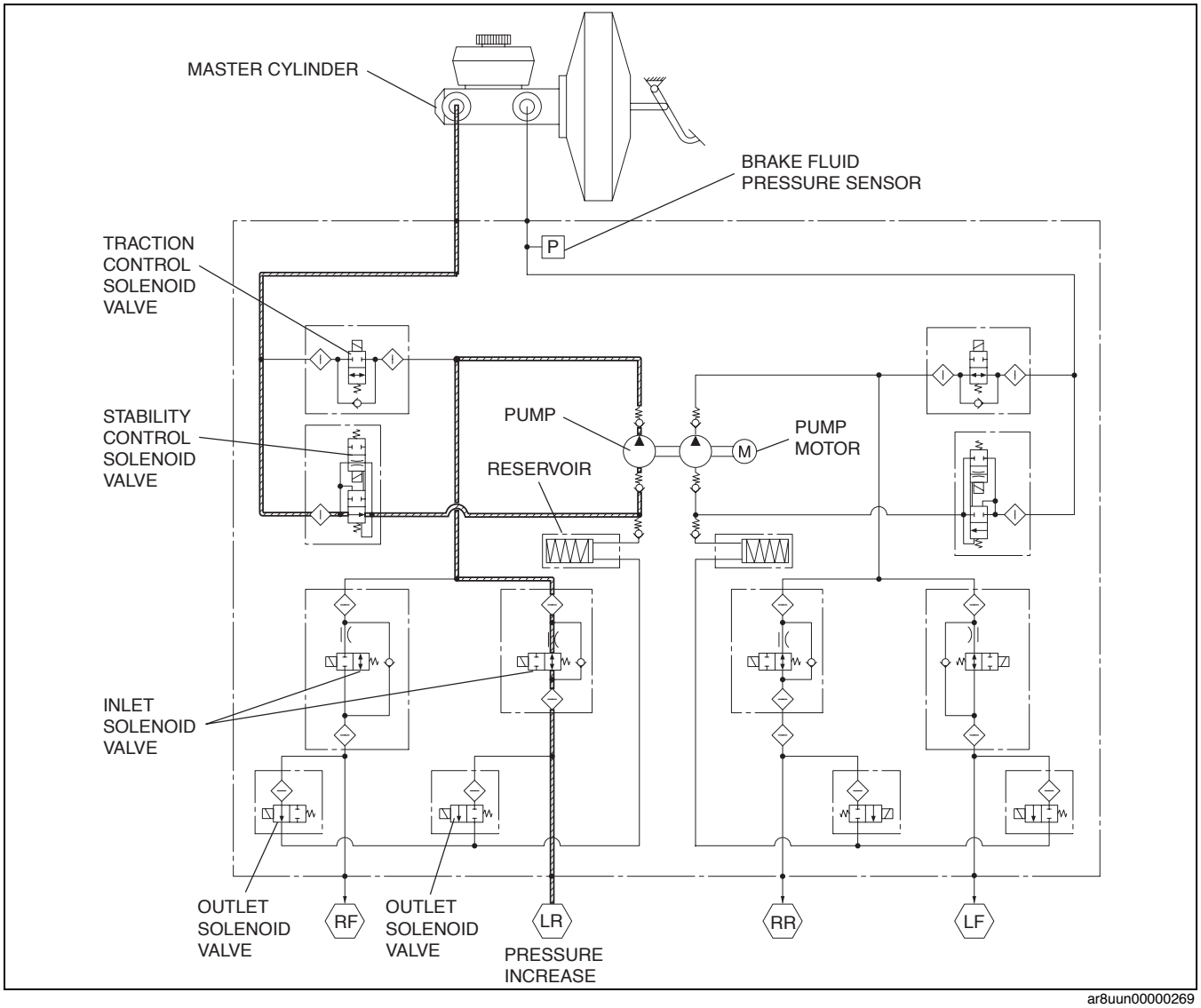

ar8uun00000269

TCS CONTROL OUTLINE

id041500101300

- TCS control actuates torque reduction through throttle, fuel cut and ignition timing control, as well as using brake control to control traction.

Note

- Brake control: Brake fluid pressure from the hydraulic unit to the slipping driving wheel is increased, operating the brake and preventing drive wheel slip.

Features

- The left and right wheels are controlled at the same time by throttle, fuel cut and ignition timing control. Therefore, when the road surface friction coefficients differ between the left and right wheels, proper torque reduction cannot be performed separately for each wheel. When this occurs, torque reduction is performed by independent left and right wheel brake control, providing much stable vehicle control.

Block Diagram

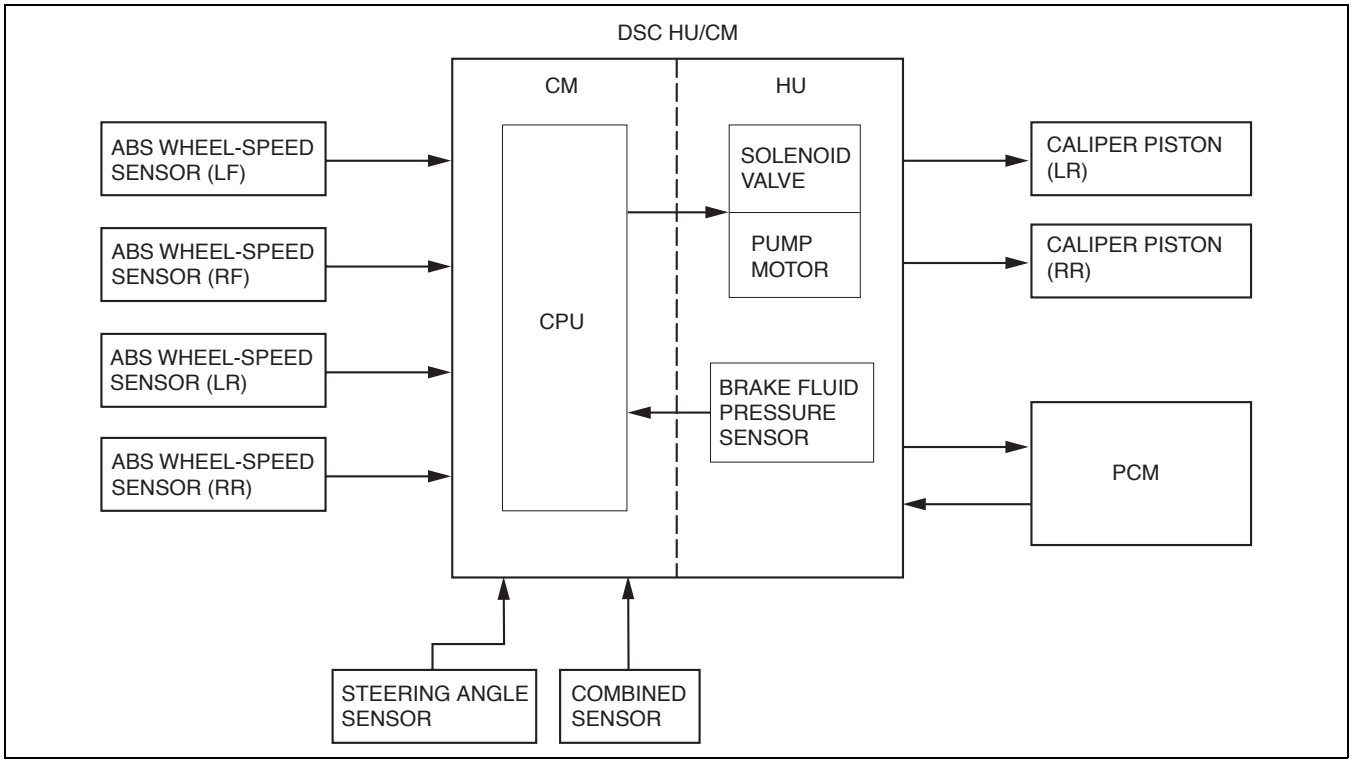

ar8uun00000040

ABS WHEEL-SPEED SENSOR AND ABS SENSOR ROTOR FUNCTION

id041500102800

- The ABS wheel-speed sensor detects and transmits the rotation condition of each wheel to the DSC HU/CM.
- The signal from the ABS wheel-speed sensors is the primary signal for DSC HU/CM control.

ABS WHEEL-SPEED SENSOR AND ABS SENSOR ROTOR CONSTRUCTION/OPERATION

id041500105000

Construction

- The ABS wheel speed sensor utilizes a semiconductor element that contains an active drive circuit (Hall element*). The front sensor is installed on the front wheel hub component and the rear sensor is installed on the rear knuckle.
- The front ABS sensor rotor utilizes a magnetic encoder system that functions with magnetic rubber, and is integrated into the front wheel hub component. Therefore, if there is any malfunction of the front ABS sensor rotor, replace the front wheel hub component.
- The rear ABS sensor rotor is integrated with the drive shaft. Therefore, if there is any malfunction of the rear ABS sensor rotor, replace the drive shaft.

*: Hall effect is produced by the Hall element which generates electromotive force in the direction perpendicular to the electrical current and magnetic field when the magnetic field is applied perpendicular to the electrical current.

Caution

- **When inspecting the ABS wheel speed sensor, do not use a tester to inspect resistance. It is possible that the voltage from the tester could damage the semiconductor inside the ABS wheel speed sensor. Inspect using the PID data monitor of the Mazda Modular Diagnostic System (M-MDS).**

Note

- Magnetic encoder: A plate that has positive and negative poles (marked out) in a continuous, alternating line.

Front ABS wheel-speed sensor and sensor rotor

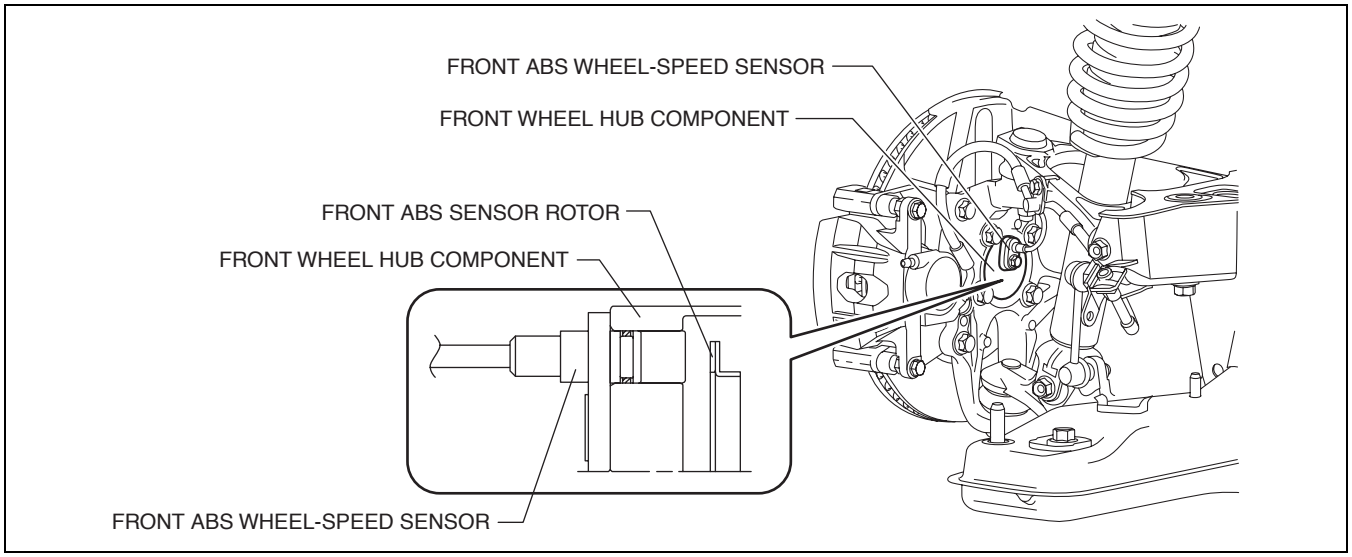

ar8uun00000085

Rear ABS wheel-speed sensor and sensor rotor

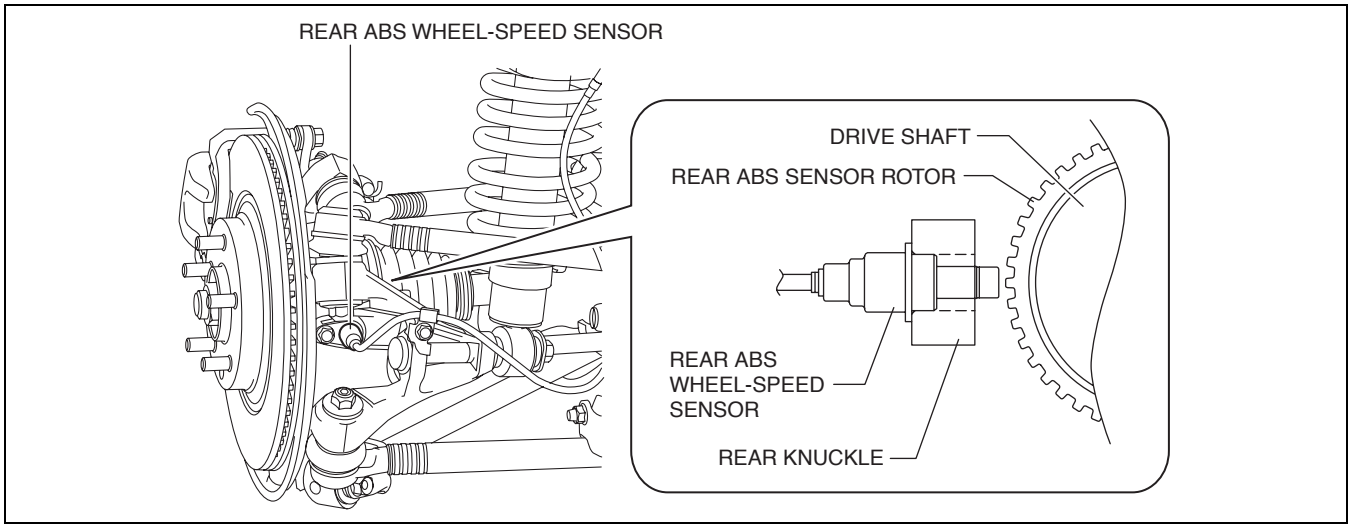

ar8uun00000086

Operation

- As the ABS sensor rotor rotates, the magnetic flux between the ABS wheel speed sensor and the ABS sensor rotor change periodically. This periodic change is in proportion to the rotation speed.
- The semiconductor element in the wheel speed sensor detects the change in magnetic flux, and the active drive circuit converts it to a rectangular wave signal for the current, which is transmitted to the DSC HU/CM.
- For every single rotation of the ABS sensor rotor, 44 rectangular wave pulse signals are output. The CM in the DSC HU/CM calculates the wheel speed from the periodicity of these pulses.

Front ABS wheel-speed sensor and sensor rotor

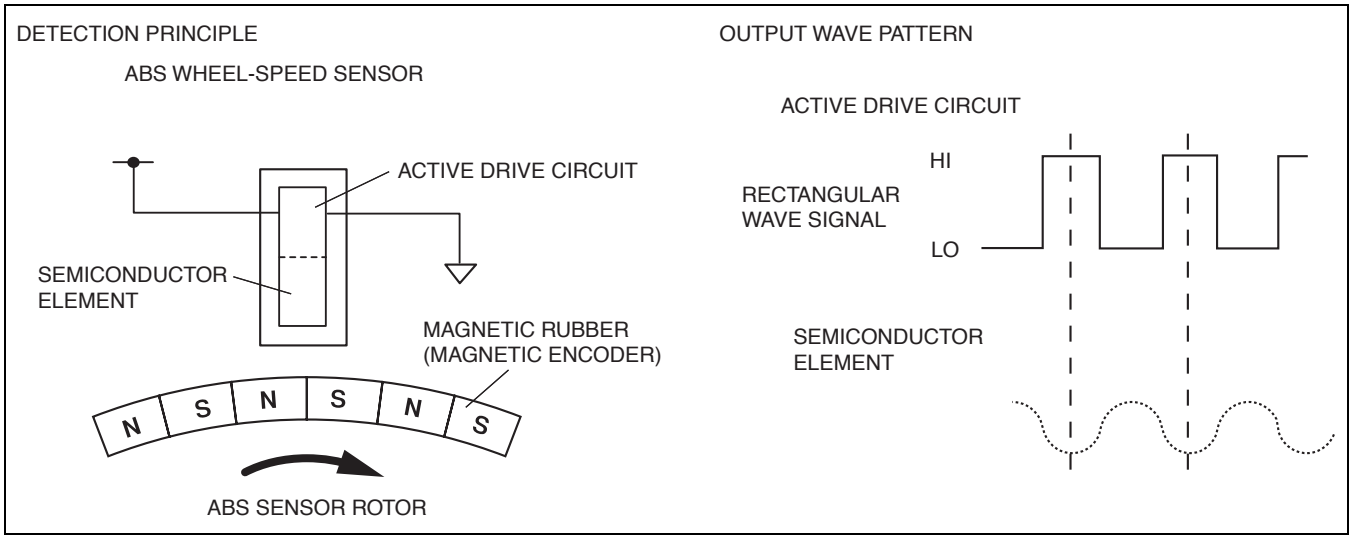

ar8uun00000362

Rear ABS wheel-speed sensor and sensor rotor

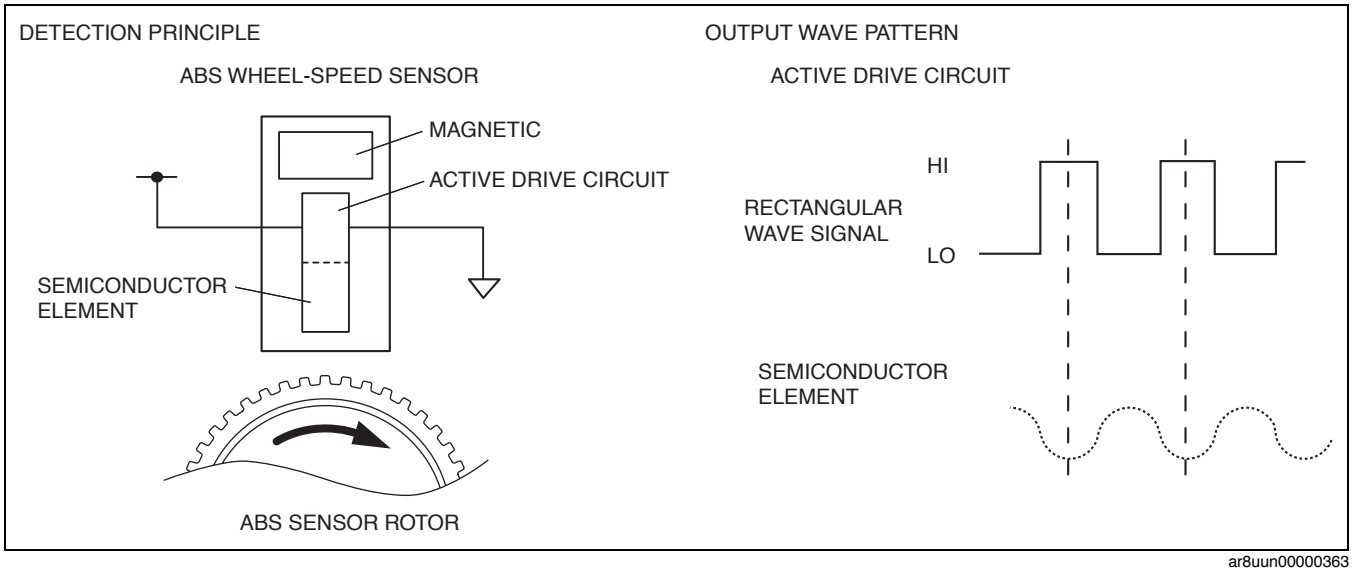

ar8uun00000363

COMBINED SENSOR CONSTRUCTION/OPERATION

id041500101900

- The combined sensor, which integrates the yaw rate and lateral-G sensors, detects and calculates the vehicle yaw and lateral-G rates, and transmits them to the DSC HU/CM via special CAN lines between the sensor and module.
- The yaw rate sensor detects Coriolis force in proportion to the rotation speed of the rotating detection area when rotation is applied to it.
- The lateral-G sensor detects an inertial force created by, and in proportion to, a G-force acting on a silicon detection component.

Note

- Coriolis force: When an object on a rotating disc attempts to move toward the center of the disc, force is produced at a right angle to the intended path of travel of the object. This results in the direction of movement being unchanged from its original point of departure, and the object does not reach the center. When looking at this effect from outside the disc, it appears as if a force is deflecting the object away from the center. This appearance of force is called a Coriolis force, and the object actually advances in a straight course.

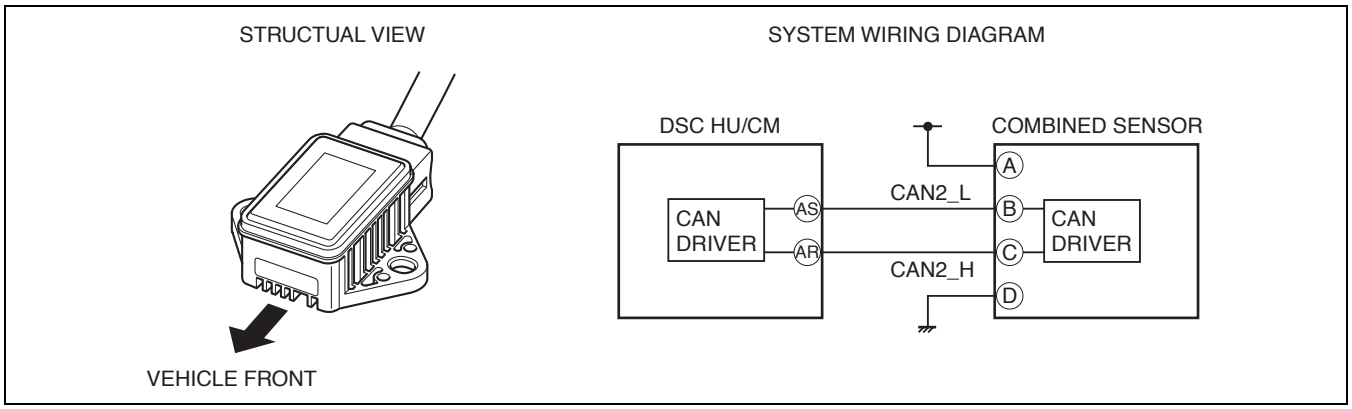

ar8uun00000041

BRAKE FLUID PRESSURE SENSOR CONSTRUCTION

id041500102100

- The brake fluid pressure sensor is built into the DSC HU/CM. Therefore if there is any malfunction of the brake fluid pressure sensor, replace the DSC HU/CM.

STEERING ANGLE SENSOR FUNCTION

id041500102400

- The steering angle sensor, located on the combination switch, detects the steering angle degree and the neutral position, and transmits these to the DSC HU/CM via CAN lines.

Warning

- **The following circumstances will cause the stored initialization value of the steering angle sensor to be cleared. This may possibly cause an accident due to the DSC becoming inoperative. Always refer to the Workshop Manual and properly perform the initialization procedure for the steering angle sensor so that the DSC operates properly.**
  - **— Negative battery cable disconnected**
  - **— Steering angle sensor connector disconnected**
  - **— Fuse (BTN 30 A) removed**
  - **— Fuse (DSC 7.5 A) removed**

Note

- If the initialization procedure for the steering angle sensor has not been performed, when the ignition switch is turned to the ON position, the DSC indicator light illuminates and the DSC OFF light flashes to warn of a malfunction.

TRANSMISSION/TRANSAXLE

05
SECTION

OUTLINE 05-00
CLUTCH 05-10
MANUAL TRANSMISSION [P66M-D] 05-11
AUTOMATIC TRANSMISSION [SJ6A-EL] 05-13
AUTOMATIC TRANSMISSION SHIFT MECHANISM 05-14

05-00 OUTLINE

TRANSMISSION/TRANSAXLE FEATURES 05-00–1
TRANSMISSION/TRANSAXLE SPECIFICATIONS 05-00–1
TRANSMISSION/TRANSAXLE IDENTIFICATION 05-00–3

TRANSMISSION/TRANSAXLE FEATURES

id050000302000

6-SPPED MT [P66M-D]	
Improved operability	• A triple synchronizer mechanism has been adopted for 1GR, 2GR, 3GR and 4GR. • Low friction bushings for the shift rod have been adopted.
Improved driveability	• In order to obtain more power from the engine, the total gear ratio has been set lower and the difference between each gear ratio has been set closer. • To improve drivetrain rigidity, the power plant frame (PPF) has been adopted.
Improved fuel economy	• Six-speed P66M-D manual transmission has been adopted.
Improved marketability	• Six-speed P66M-D manual transmission has been adopted.
Improved reliability	• A double engagement prevention mechanism (interlock mechanism) has been adopted.
Mis-shift prevention	• A push-type reverse lockout mechanism has been adopted.
6-SPPED AT [SJ6A-EL]	
Improved reliability	• A cooling system has been changed.
Improved operability	• A direct mode control has been adopted. • A steering shift switch has been changed.

TRANSMISSION/TRANSAXLE SPECIFICATIONS

id050000302100

Clutch

Item			Specifications	
			2009MY RX-8	2008MY RX-8
Clutch control			Floor-shift	←
Clutch cover	Spring type		Diaphragm	←
	Set load	(N {kgf, lbf})	6,470 {660, 1,455}	←
Clutch disc	Outer diameter	(mm {in})	236 {9.29}	←
	Inner diameter	(mm {in})	160 {6.30}	←
Clutch pedal	Type		Suspended	←
	Pedal ratio		5.7	←
	Full stroke	(mm {in})	130 {5.118}	←
Clutch master cylinder inner diameter		(mm {in})	15.87 {0.6248}	←
Clutch release cylinder inner diameter		(mm {in})	19.05 {0.7500}	←
Clutch fluid type			SAE J1703 or FMVSS 116 DOT-3	←

Manual Transmission [P66M-D]

Item			Specifications	
			2009MY RX-8	2008MY RX-8
Manual transmission type			P66M-D	Y16M-D
Transaxle control			Floor-shift	←
Shift assist			Synchromesh	←
Gear ratio	1GR		3.815	3.760
	2GR		2.260	2.269
	3GR		1.536	1.645
	4GR		1.177	1.187
	5GR		1.000	←
	6GR		0.787	0.843
	Reverse		3.603	3.564
Oil	Grade		API service GL-4	API service GL-4 or GL-5
	Viscosity	All season	SAE 75W-90	←
	Capacity (approx. quantity)	(L {US qt, Imp qt})	1.95 {2.06, 1.72}	1.75 {1.85, 1.54}

Automatic Transmission [SJ6A-EL]

Item		Specifications	
		2009MY RX-8	2008MY RX-8
Transmission type		SJ6A-EL	←
Gear ratio	1GR	3.538	←
	2GR	2.060	←
	3GR	1.404	←
	4GR	1.000	←
	5GR	0.713	←
	6GR	0.582	←
	Reverse	3.168	←
ATF	Type	JWS3309	←
	Capacity (Approx. quantity) (L {US qt, Imp qt}	8.0 {8.5, 7.0}	←
Torque converter stall torque ratio		1.87	←
Hydraulic system (Number of drive/driven plates)	C1 clutch	4/4	←
	C2 clutch	5/5	←
	C3 clutch	4/3	←
	C4 clutch	4/4	←
	B1 brake	3/3	←
	B2 brake	4/3	←
	B3 brake	4/4	←
	B4 brake	5/4	←
Front planetary gear (Number of teeth)	Sun gear	33	←
	Pinion gear (inner)	19	←
	Pinion gear (outer)	18	←
	Ring gear	75	←
Middle planetary gear (Number of teeth)	Sun gear	26	←
	Pinion gear	20	←
	Ring gear	66	←
Rear planetary gear (Number of teeth)	Sun gear	26	←
	Pinion gear	20	←
	Ring gear	66	←

TRANSMISSION/TRANSAXLE IDENTIFICATION

id050000302300

- Each Transmission/Transaxle is assigned a specific Mazda type code. The code can be broken down as follows:

Manual Transmission

P66M-D

- Shift control type
  D: Direct shift control
- Transmission/transaxle type
  M: Manual transmission/transaxle
- Transmission/transaxle speed
  6: 6-speed
- Transmission/transaxle model
  P6: P6-type

Automatic Transmission

SJ6A-EL

- Converter type
  L: With lockup clutch
- Shift control type
  E: Electronic shift control
- Transmission/transaxle type
  A: Automatic transmission/transaxle
- Transmission/transaxle speed
  6: 6-speed
- Transmission/transaxle model
  SJ: SJ-type

ar8uun00000377

05-10 CLUTCH

CLUTCH OUTLINE 05-10–1
CLUTCH STRUCTURAL VIEW. 05-10–1
CLUTCH MASTER CYLINDER CONSTRUCTION 05-10–2

CLUTCH OUTLINE

id051000100300

- A hydraulic clutch control mechanism is used.

CLUTCH STRUCTURAL VIEW

id051000100500

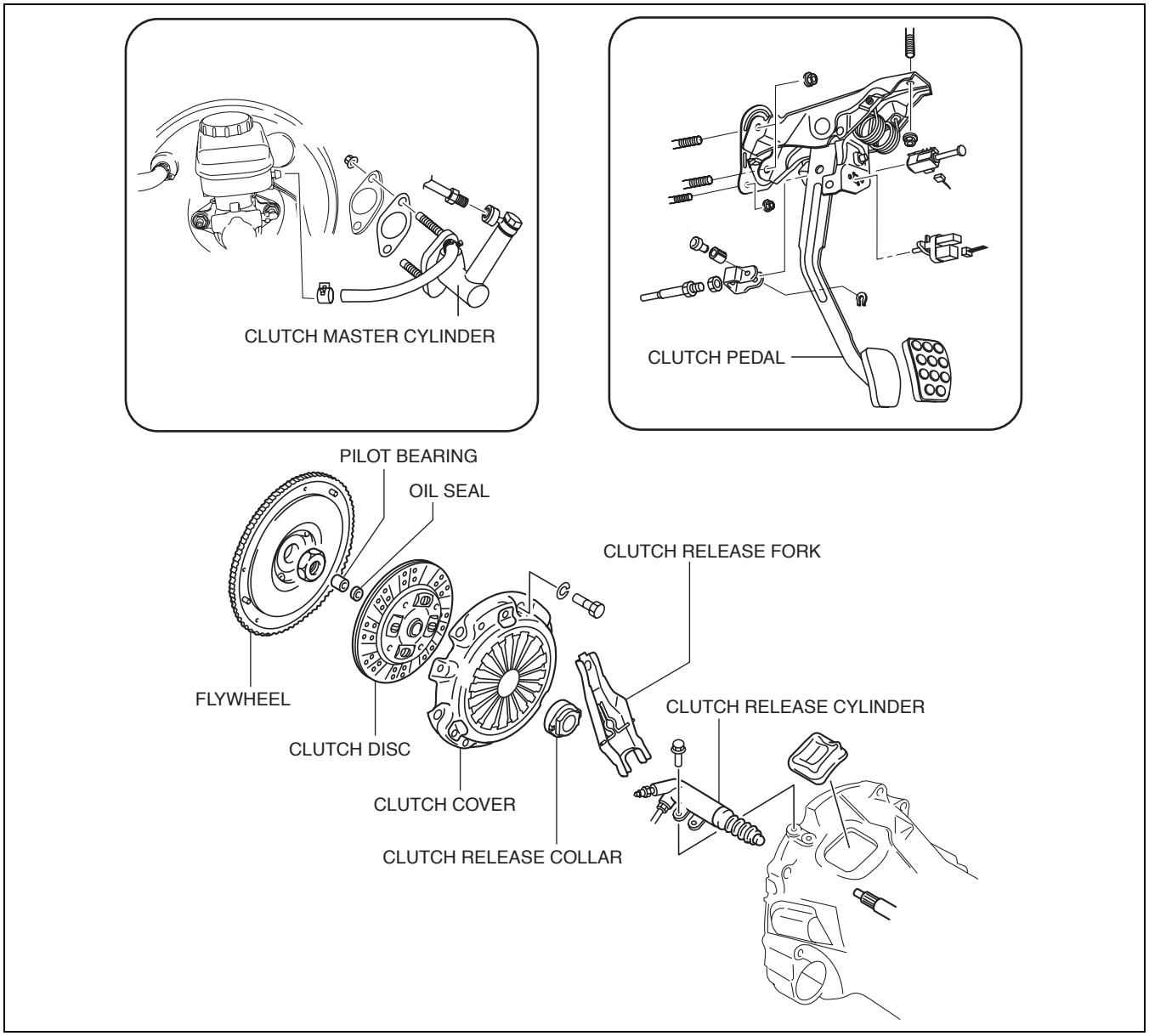

ar8uun00000371

CLUTCH MASTER CYLINDER CONSTRUCTION

- The clutch master cylinder consists of a primary cup, spacer, piston, and a return spring.

id051000210700

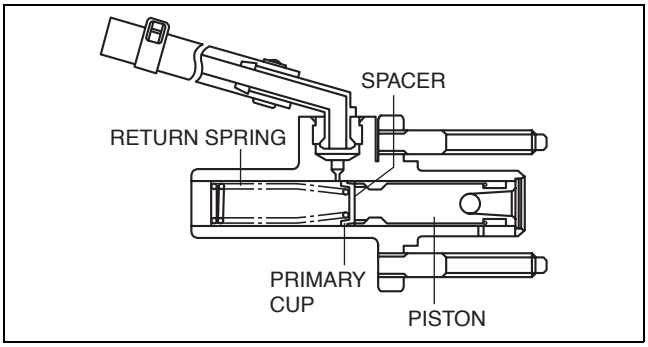

ar8uun00000166

05-11 MANUAL TRANSMISSION [P66M-D]

MANUAL TRANSMISSION OUTLINE [P66M-D] 05-11–1
MANUAL TRANSMISSION CROSS-SECTIONAL VIEW [P66M-D] 05-11–1
MANUAL TRANSMISSION POWER FLOW [P66M-D] 05-11–2
SHIFT MECHANISM STRUCTURE [P66M-D] 05-11–3
TRIPLE CONE SYNCHRONIZER MECHANISM STRUCTURE [P66M-D] 05-11–4
Features 05-11–4
Structure 05-11–4
TRIPLE CONE SYNCHRONIZER MECHANISM OPERATION [P66M-D] 05-11–5
SHIFT INTERLOCK MECHANISM FUNCTION [P66M-D] 05-11–6
SHIFT INTERLOCK MECHANISM OPERATION [P66M-D] 05-11–6
Structure 05-11–6
Operation 05-11–6
REVERSE LOCKOUT MECHANISM FUNCTION [P66M-D] 05-11–7
REVERSE LOCKOUT MECHANISM CONSTRUCTION/OPERATION [P66M-D] 05-11–7
POWER PLANT FRAME (PPF) FUNCTION [P66M-D] 05-11–8
Features 05-11–8

MANUAL TRANSMISSION OUTLINE [P66M-D]

id051111102400

- A linked, triple-cone synchronizer mechanism has been adopted for 1st, 2nd, 3rd and 4th gears.
- A push-type reverse lockout mechanism has been adopted.

MANUAL TRANSMISSION CROSS-SECTIONAL VIEW [P66M-D]

id051111102500

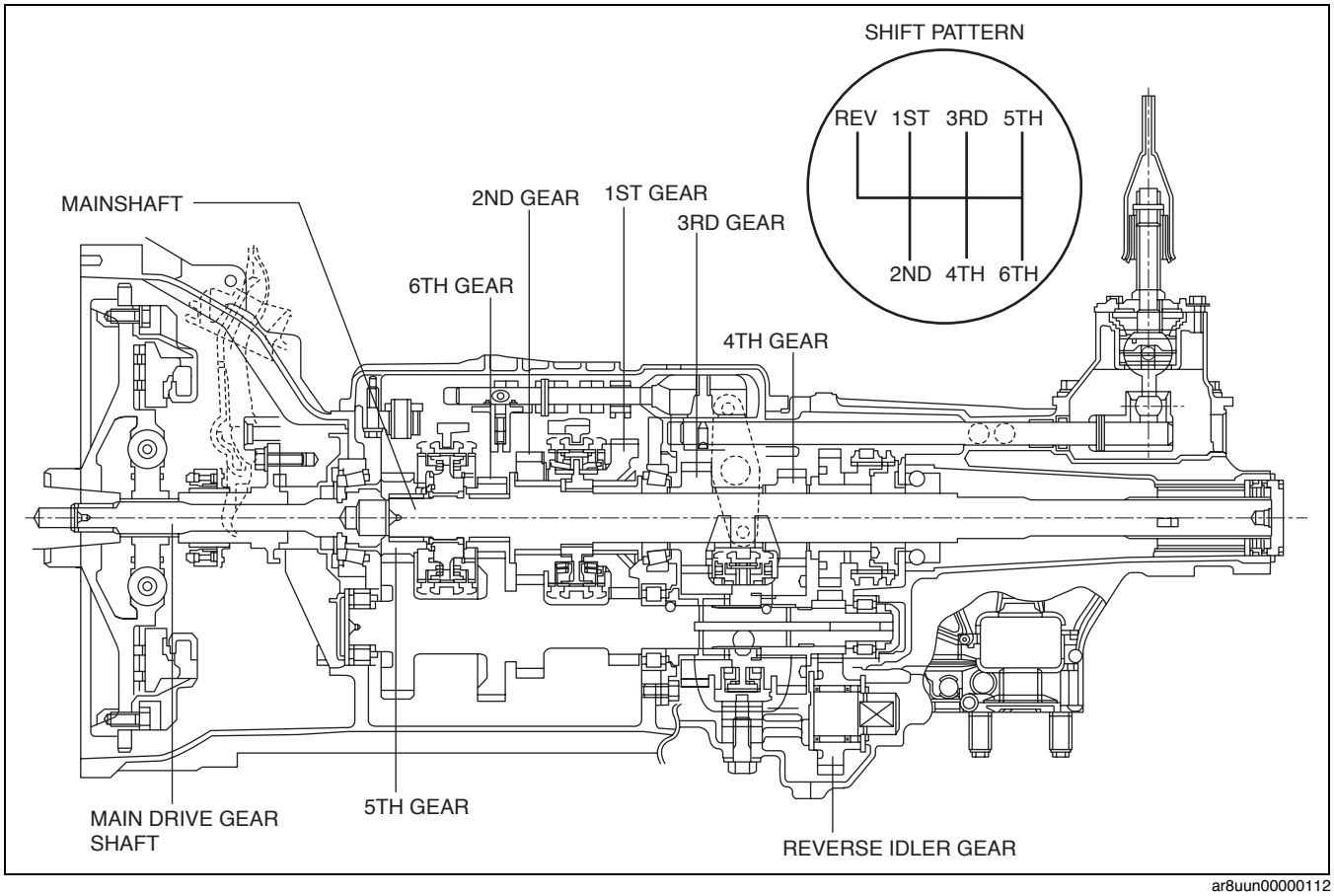

ar8uun00000112

MANUAL TRANSMISSION POWER FLOW [P66M-D]

id051111102600

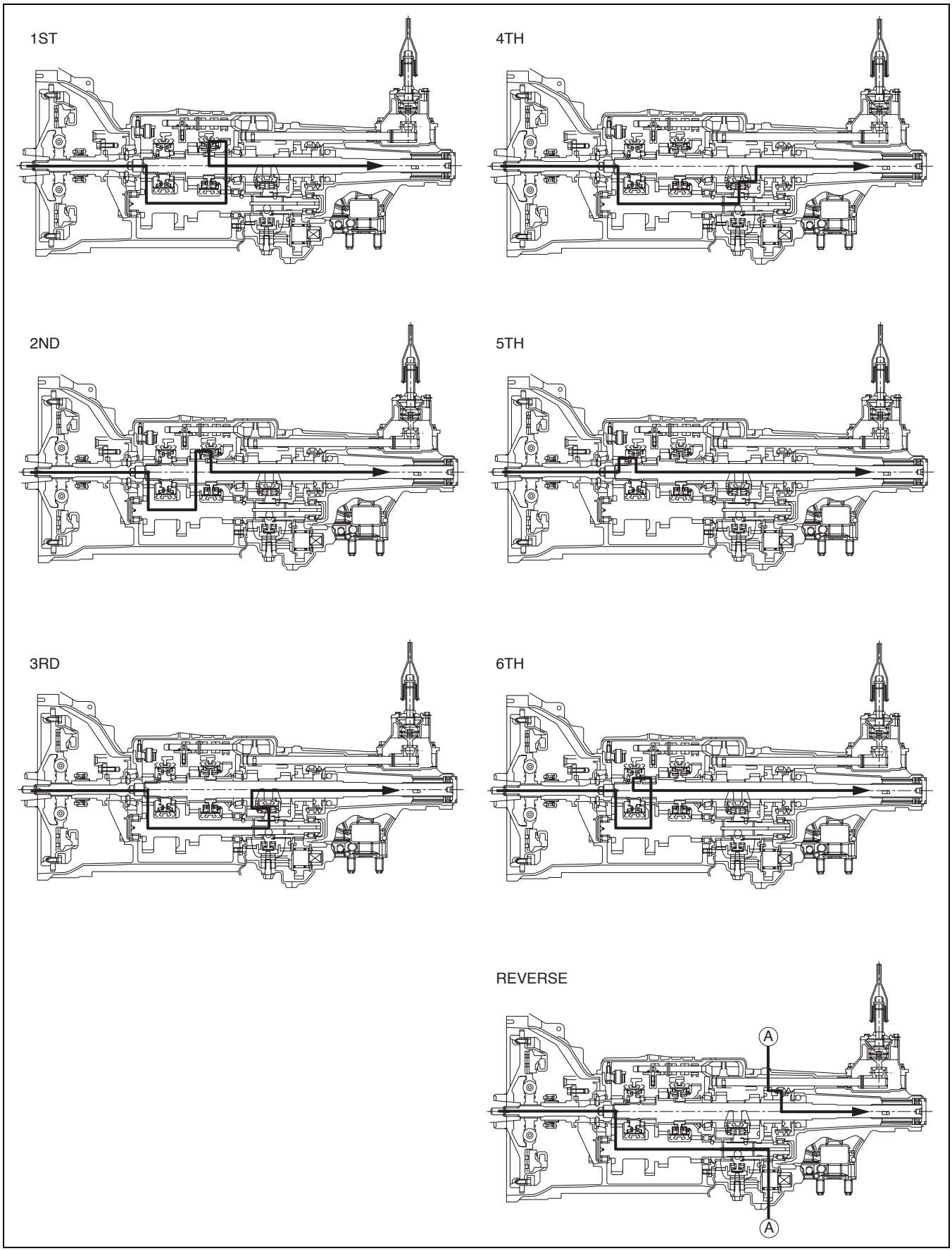

ar8uun00000113

SHIFT MECHANISM STRUCTURE [P66M-D]

id051111102700

- The shift lever stroke has been set shorter to provide optimal shift feel.
- To realize assured shift feel, the shift link mechanism has been integrated.
- Due to the use of metal bushings for the sliding parts of the shift rod, sliding resistance during shifting is greatly reduced, thus improving shift quality.

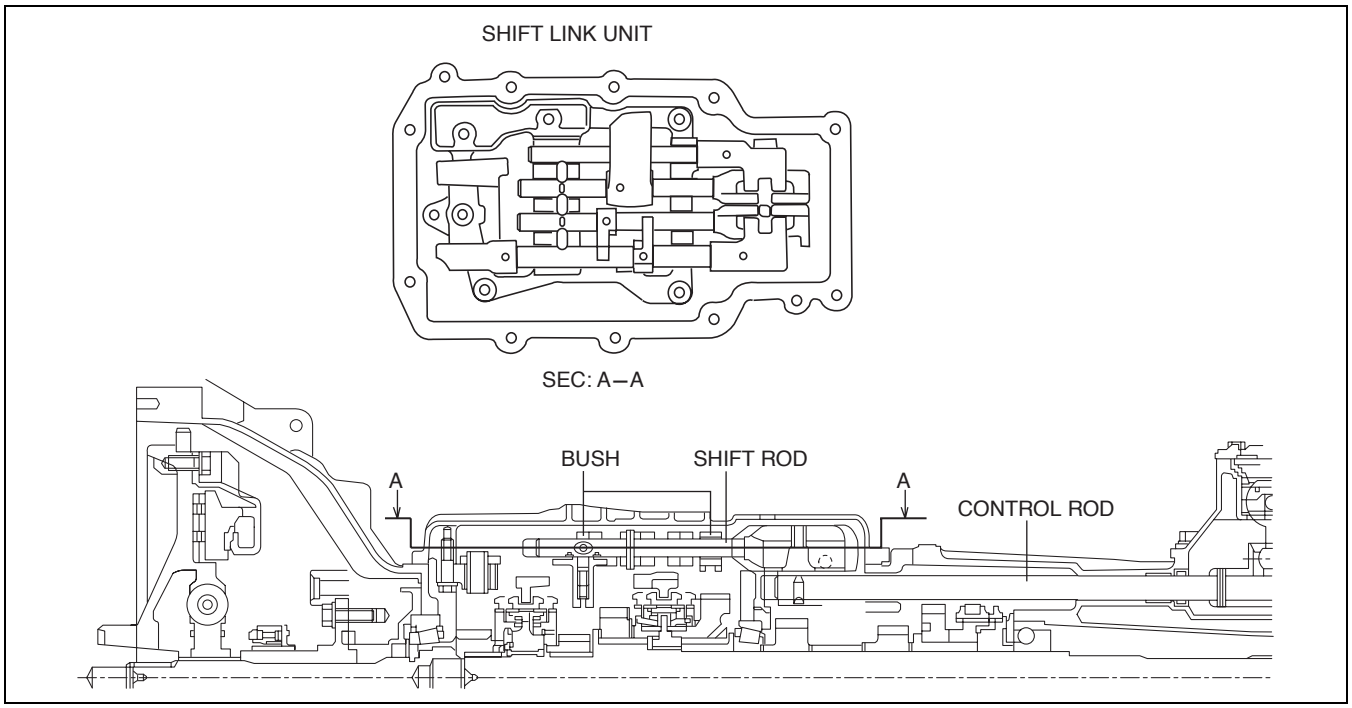

ar8uun00000114

TRIPLE CONE SYNCHRONIZER MECHANISM STRUCTURE [P66M-D]

id051111103200

Features

- A triple cone synchronizer mechanism is used for the 1st, 2nd, 3rd and 4th gears.
- The triple cone synchronizer mechanism is a compact device capable of heavy duty meshing.
- The synchro mechanism reduces meshing time and improves operation.
- The triple cone synchro mechanism includes a synchronizer ring, a double cone, and an inner cone.

Structure

Structural view

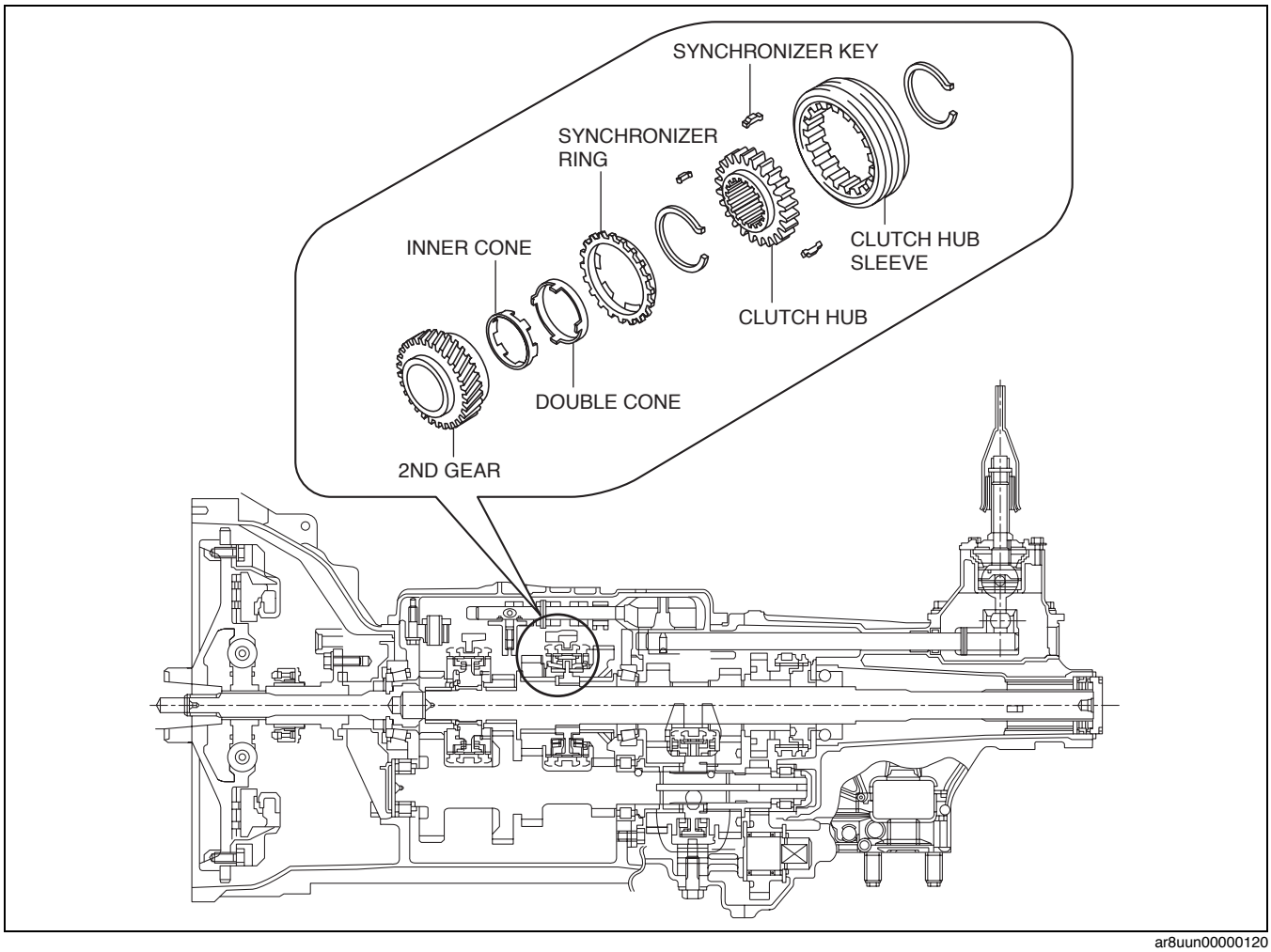

ar8uun00000120

TRIPLE CONE SYNCHRONIZER MECHANISM OPERATION [P66M-D]

id051111103300

1. When the hub sleeve moves to the left (in the direction of the arrow), the synchronizer key presses against the synchronizer ring.

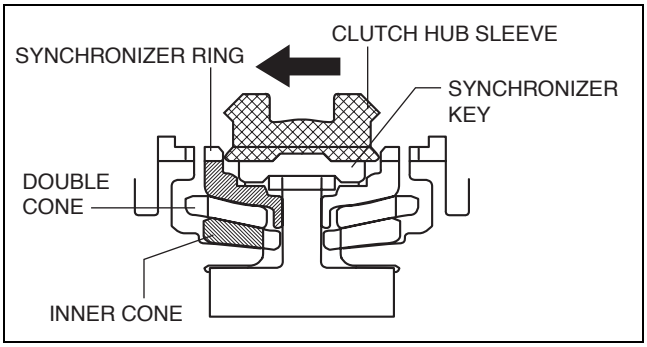

ar8uun00000121

2. As the hub sleeve continues moving to the left, the key causes friction between the synchronizer ring, double cone, and inner cone. The synchronizer ring turns only the distance that the key groove gap allows, aligning the teeth of the hub sleeve and the synchronizer ring. As the hub sleeve continues moving, the friction between the cones becomes greater, and the difference between the rotational speeds of the synchronizer ring, inner cone, and double cone (unified with the gear) gradually disappears.

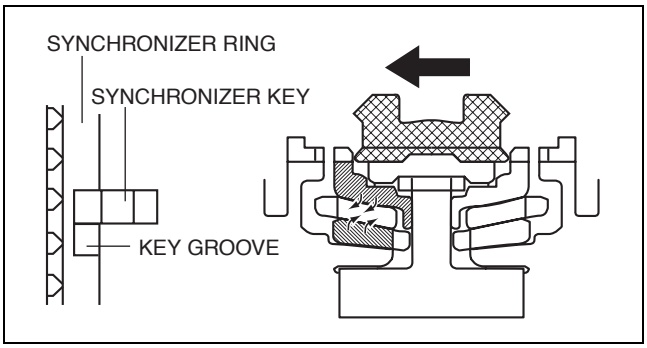

ar8uun00000122

3. The hub sleeve then moves up onto the synchronizer key and engages the synchronizer ring.

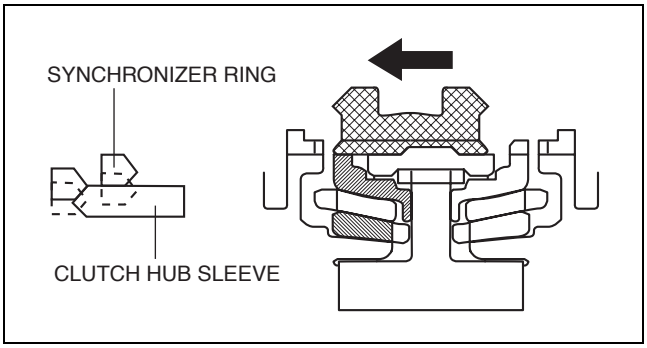

ar8uun00000123

4. The hub sleeve then engages the synchro teeth of the gear to complete shifting.

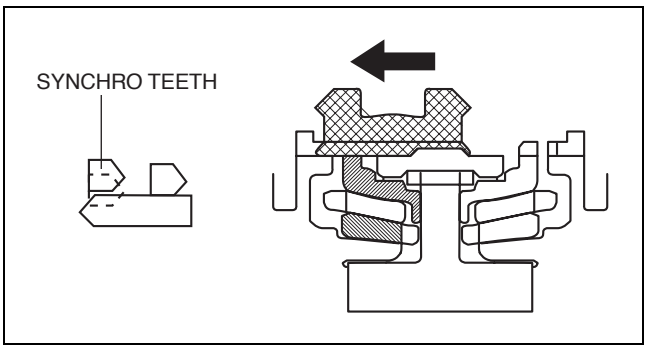

ar8uun00000124

SHIFT INTERLOCK MECHANISM FUNCTION [P66M-D]

id051111103000

- This provides reliable double-engagement prevention.

SHIFT INTERLOCK MECHANISM OPERATION [P66M-D]

id051111103100

Structure

- During shifting, the shift rods, except for the one in operation, are locked in the neutral position by the interlock pins.

Operation

Neutral

- Each interlock pin is in the groove of each shift rod because no shift rod is operating.

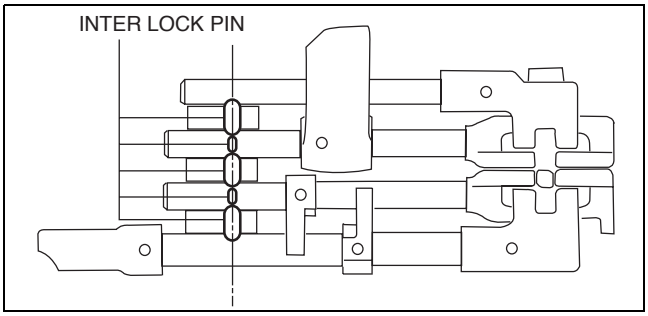

ar8uun00000115

1st/2nd shifting

- Movement of the 1st/2nd shift rod forces interlock pins A and C out of the 1st/2nd shift rod grooves, and the reverse shift rod and 3rd/4th shift rod are locked. In addition, interlock pin C forces interlock pin E out via interlock pin D, and the 5th/6th shift rod is locked.

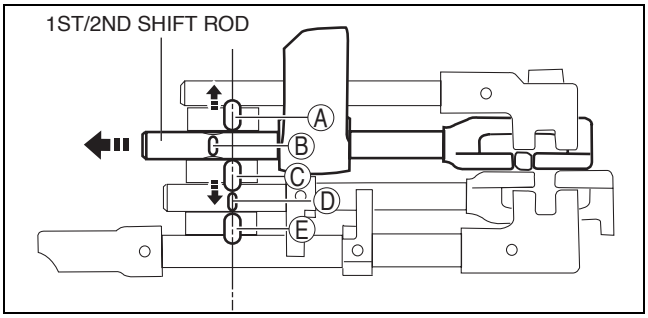

ar8uun00000116

3rd/4th shifting

- When the 3rd/4th shift rod operates, the other three shift rods are locked in the same way as the 1st/2nd shifting.

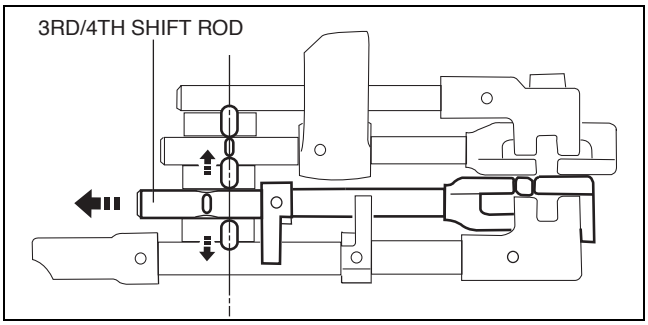

ar8uun00000117

Reverse shifting

- Movement of the reverse shift rod forces interlock pin A out of the reverse shift rod groove, and the 1/2 shift rod is locked. In addition, interlock pin A forces interlock pins C and E out via interlock pins B and D, and the 3rd/4th shift rod and 5th/6th shift rod are locked.

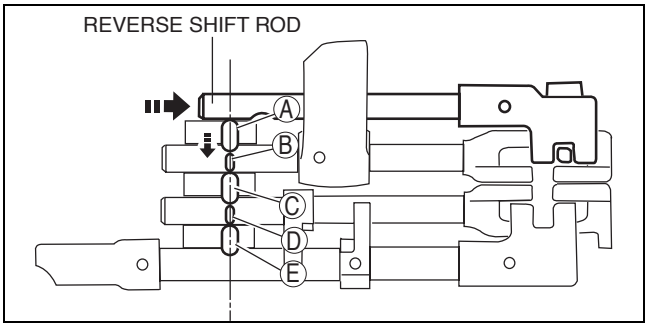

ar8uun00000118

5th/6th shifting

- When the 5th/6th shift rod operates, the other three shift rods are locked in the same way as the reverse shifting.

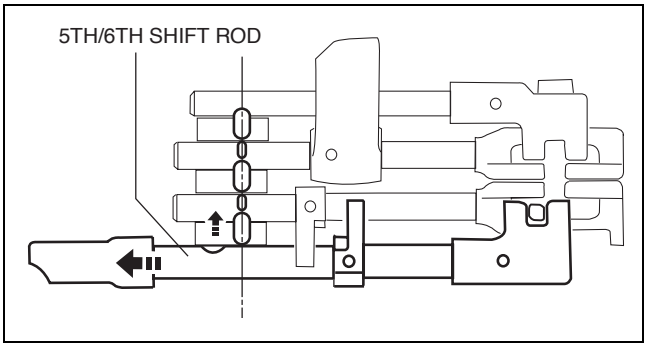

ar8uun00000119

REVERSE LOCKOUT MECHANISM FUNCTION [P66M-D]

id051111103800

- The reverse lockout mechanism prevents the driver from accidentally shifting into reverse gear when shifting from neutral to 1st gear.

REVERSE LOCKOUT MECHANISM CONSTRUCTION/OPERATION [P66M-D]

id051111103900

- With the adoption of the reverse lockout mechanism, which utilizes a guide plate, reliability has been assured.
- A guide plate, attached to the extension housing, prevents accidental shifting into reverse when shifting from neutral to 1st gear by restricting the movement of the shift lever. When shifting into reverse, once the shift lever is pressed down and moved towards the reverse position, the projection on the lever goes under the guide plate, releasing the reverse shift restriction and allowing for shifting into reverse.

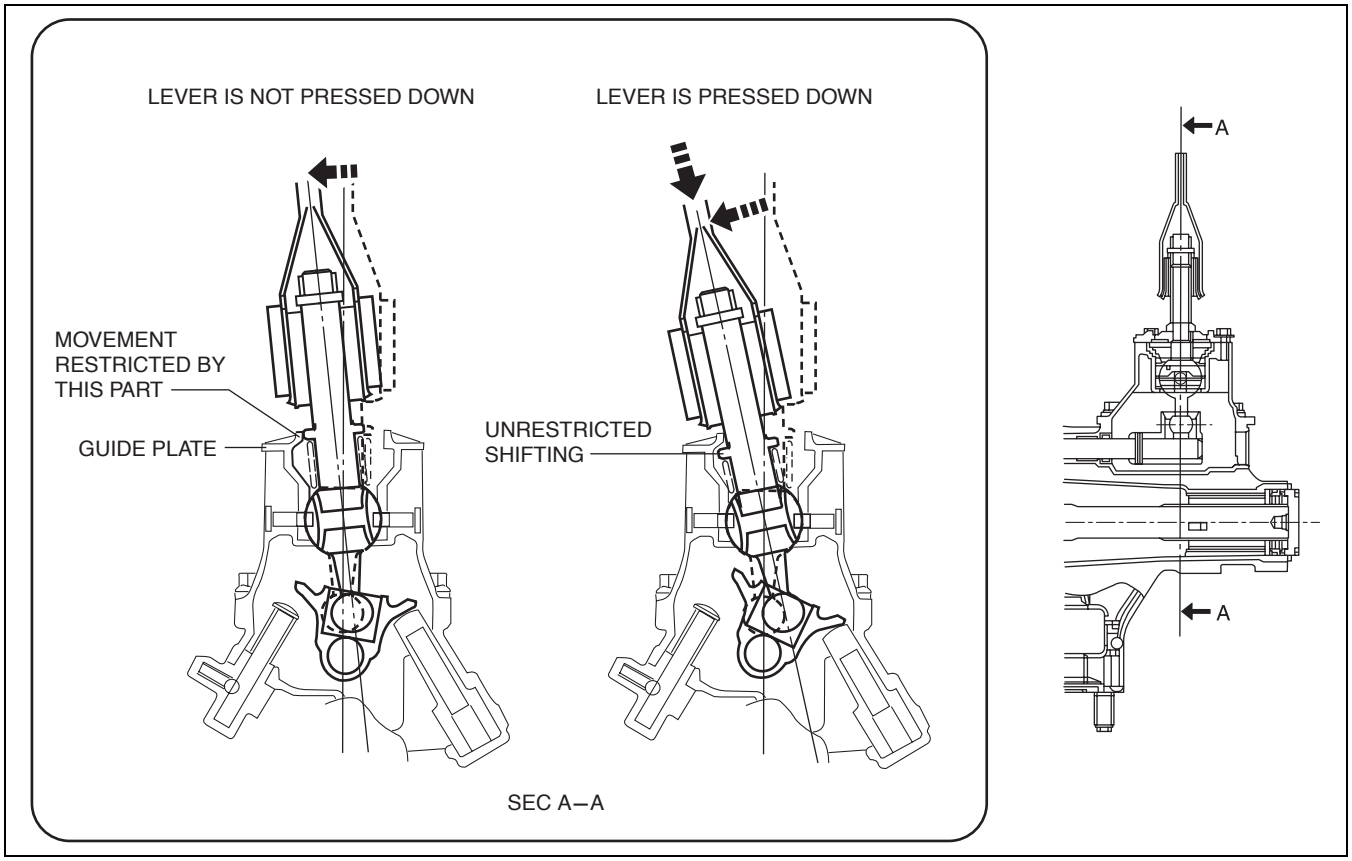

ar8uun00000125

POWER PLANT FRAME (PPF) FUNCTION [P66M-D]

id051111634000

Features

- The power plant frame (PPF) maintains rigidity with a bracket installed between the transmission and the differential. Due to this the shift feeling is solid and a feeling of direct drive when starting from a standstill or accelerating is created.
- Also, due to the closed-section construction of the PPF, direct drive and response feeling have been improved.
  — The transmission and differential are joined in a single unit which, even though the differential can be separated from the body, time lag is lessened due to the near elimination of lift, creating a feeling of direct drive. Furthermore, shock and vibration during acceleration and deceleration is greatly reduced.

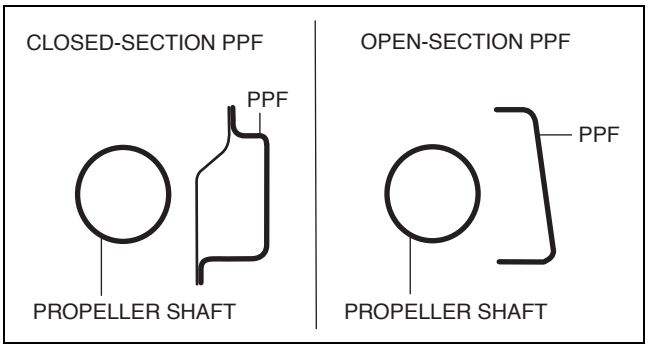

ar8uun00000154

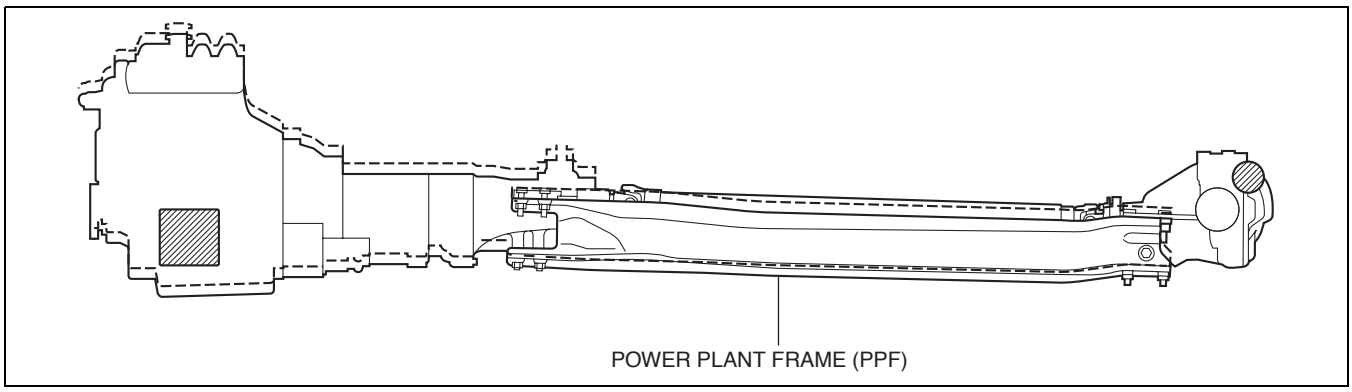

ar8uun00000369

05-13 AUTOMATIC TRANSMISSION [SJ6A-EL]

ELECTRONIC CONTROL ITEMS AND CONTENTS [SJ6A-EL] 05-13–1
INPUT/OUTPUT SIGNAL AND RELATED CONTROLS [SJ6A-EL] 05-13–2
COOLING SYSTEM OUTLINE [SJ6A-EL] 05-13–3
DIRECT MODE CONTROL OUTLINE [SJ6A-EL] 05-13–4
Features 05-13–4
Block Diagram 05-13–4
System Flow 05-13–4

ELECTRONIC CONTROL ITEMS AND CONTENTS [SJ6A-EL]

id051311324800

Item	Content
Shift control	• Detects engine load and vehicle speed, and switches to optimum gear in accordance with preset shift program. • In D range, automatically switches between NORMAL, AAS, DOWN-SLOPE, UP-SLOPE modes according to specific conditions.
Manual mode shift control	• Shifts to selected gear position by manual shifting of the selector lever forward and back. • The up/down operation of the steering shift switch is the same as the manual operation of the selector lever.
Direct mode control	• Shifts temporarily by using the steering shift switch even when the selector lever is in the D range
TCC control	• According to preset TCC point, performs TCC operation.
5-6 shift inhibit control	• Inhibits shift change from the 5th to 6th gears when the engine is cold.
Torque reduction control	• Optimally controls engine output torque when shifting.
Line pressure control	• Controls line pressure according to driving conditions.
Shift learning control	• Performs optimal correction for clutch engagement pressure to reduce changes in engine performance and/or elapsed transmission.
On-board diagnostic system	• Detects and/or memorizes failure of input/output part and transmission condition.

INPUT/OUTPUT SIGNAL AND RELATED CONTROLS [SJ6A-EL]

id051311325000

Component		Control item								
		Shift control	Manual mode shift control	Direct mode control	TCC control	5-6 shift inhibit control	Torque reduction control	Line pressure control	Shift learning control	On-board diagnostic function
Input										
VSS		X	X	X	X			X		X
Turbine sensor		X	X	X	X		X	X	X	X
TR switch		X	X			X				
M range switch			X					X		
Up switch			X					X		
Down switch			X					X		
Steering shift switch			X	X				X		
TFT sensor		X	X		X			X		
CAN communication	Brake switch				X					
	Throttle opening signal (APP sensor)	X	X	X			X	X		X
	Engine speed signal (Eccentric shaft position sensor)	X		X	X		X	X	X	X
	Engine torque signal (MAF sensor)						X	X	X	X
	Cruise control signal	X								
	Engine coolant temperature signal (ECT sensor)	X			X	X				X
	Wheel speed signal (wheel speed sensor)	X		X						
Output										
ON/OFF type	Shift solenoid A	X	X	X					X	X
	Shift solenoid B	X	X	X					X	X
	Shift solenoid C	X	X	X					X	X
	Shift solenoid D	X	X	X					X	X
	Shift solenoid E	X	X	X					X	X
Linear type	Line pressure control solenoid	X	X	X				X	X	X
	TCC control solenoid				X					X
	Shift solenoid F	X	X	X		X		X	X	X
	Shift solenoid G	X	X	X		X		X	X	X
CAN communication	AT warning light	X	X							X
	Reduce torque signal						X			
Speedometer signal										

X : Available

COOLING SYSTEM OUTLINE [SJ6A-EL]

id051311327300

- A water-cooling type AT oil cooler is adopted and installed in the radiator. The oil cooler cools the ATF heated in the AT body.

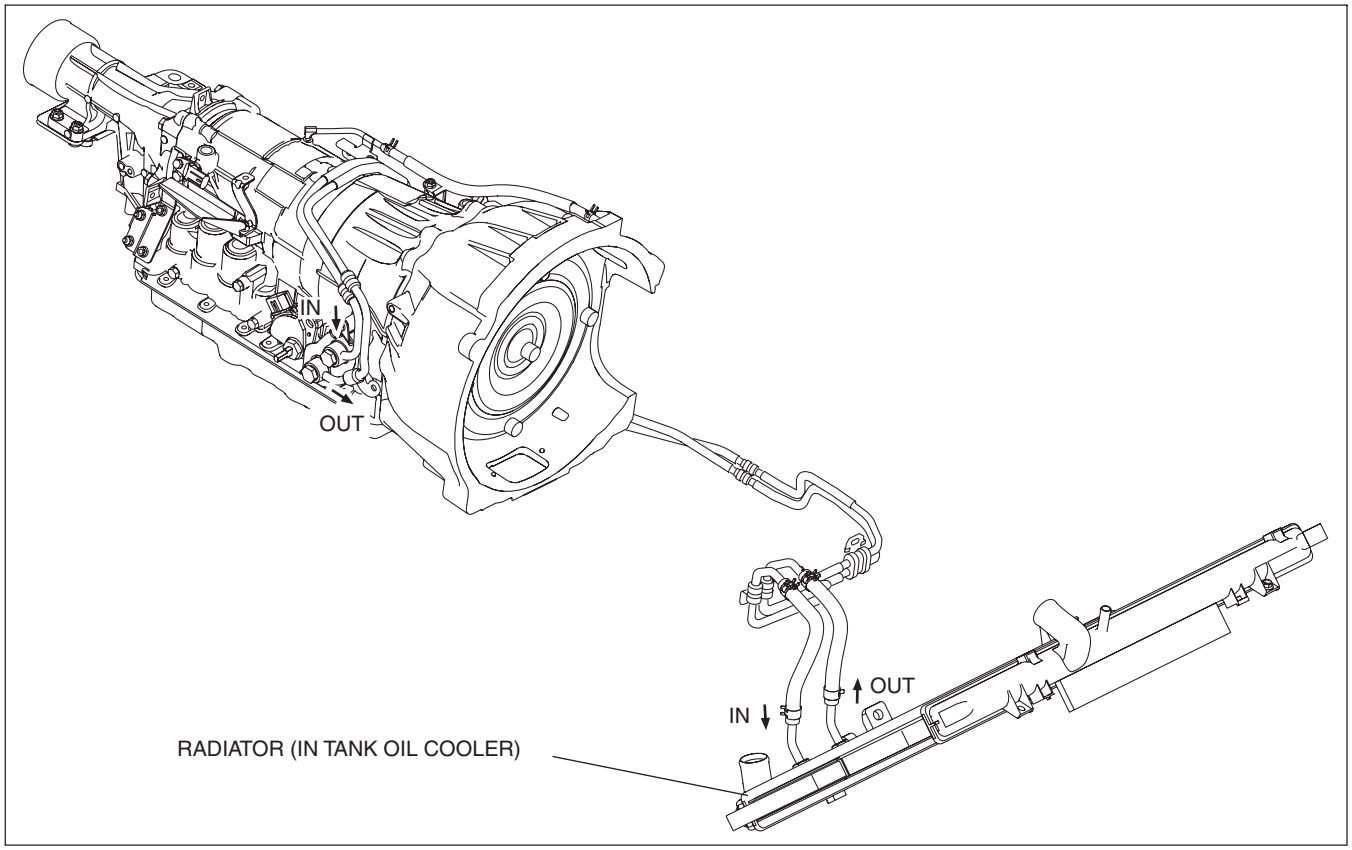

ar8wzn00000099

DIRECT MODE CONTROL OUTLINE [SJ6A-EL]

id051311638000

Features

- Direct mode control enables temporary use of manual shifting using the steering shift switch even when the selector lever is in the D range.
- The transmission can be controlled at the driver's discretion by operating the steering shift switch, which enables effective downshift during deceleration using engine brake force, cornering after deceleration, and acceleration when passing.
- After switching to direct mode, the system returns to automatic shift mode automatically in accordance with driving conditions.

Block Diagram

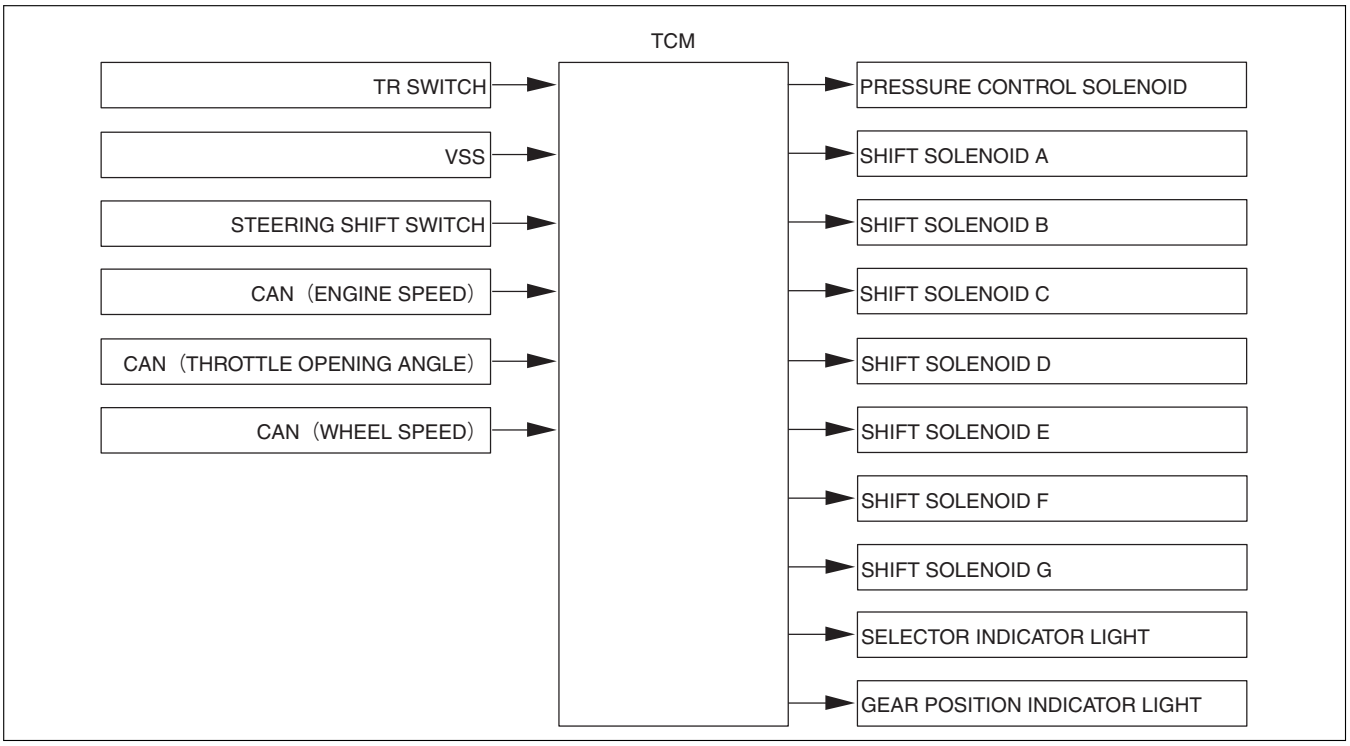

ar8wzn00000159

System Flow

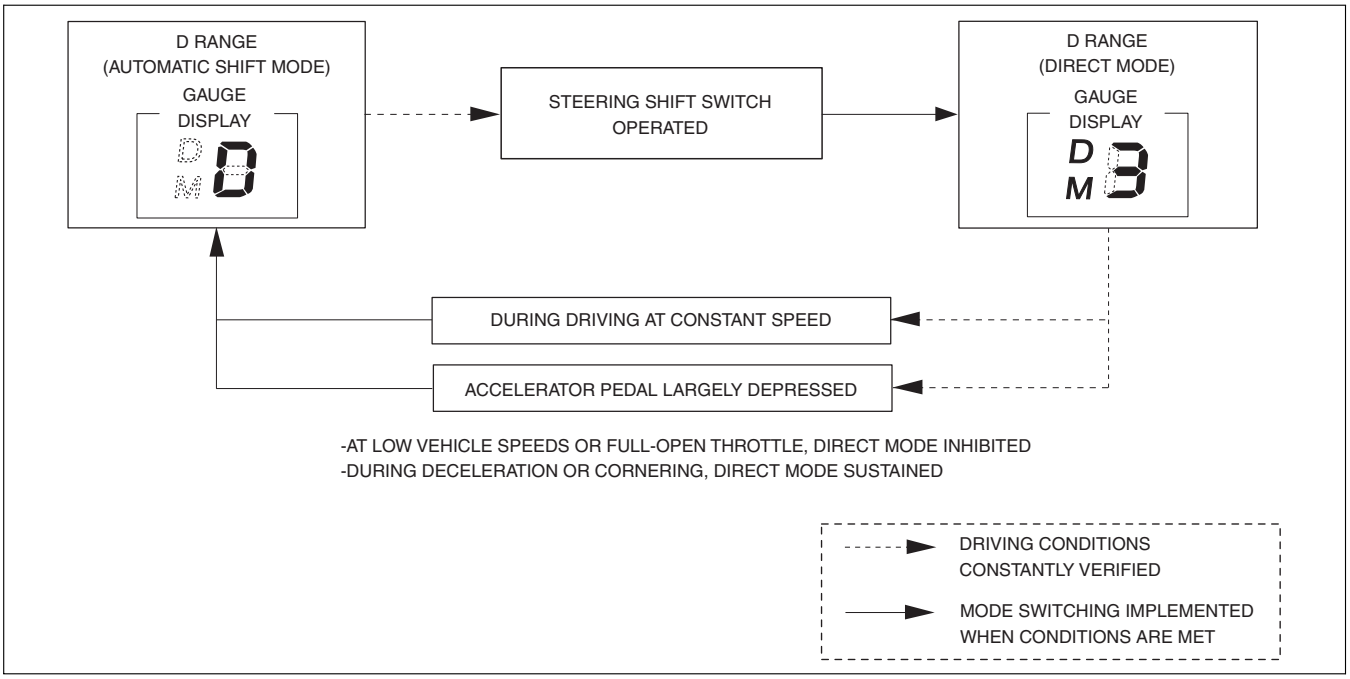

ar8wzn00000504

05-14 AUTOMATIC TRANSMISSION SHIFT MECHANISM

STEERING SHIFT SWITCH CONSTRUCTION/OPERATION 05-14–1
Construction 05-14–1
Operation 05-14–1

STEERING SHIFT SWITCH CONSTRUCTION/OPERATION

id051400328400

Construction

- There is one pair of up and down switches on both the left and right sides of the steering wheel.
- The down switch is built into the audio control switch.

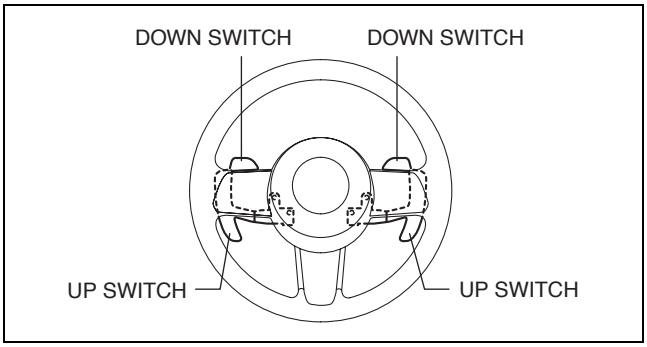

ar8wzn00000104

Operation

Sending of up/down-shift request signals

- The TCM detects an up/down-shift request signal according to the voltage applied to terminal 2AF.
- When the up or down switch is operated, the resistor built into the down switch changes the voltage applied to TCM terminal 2AF.
- The TCM controls upshifting or downshifting based on this change in voltage.

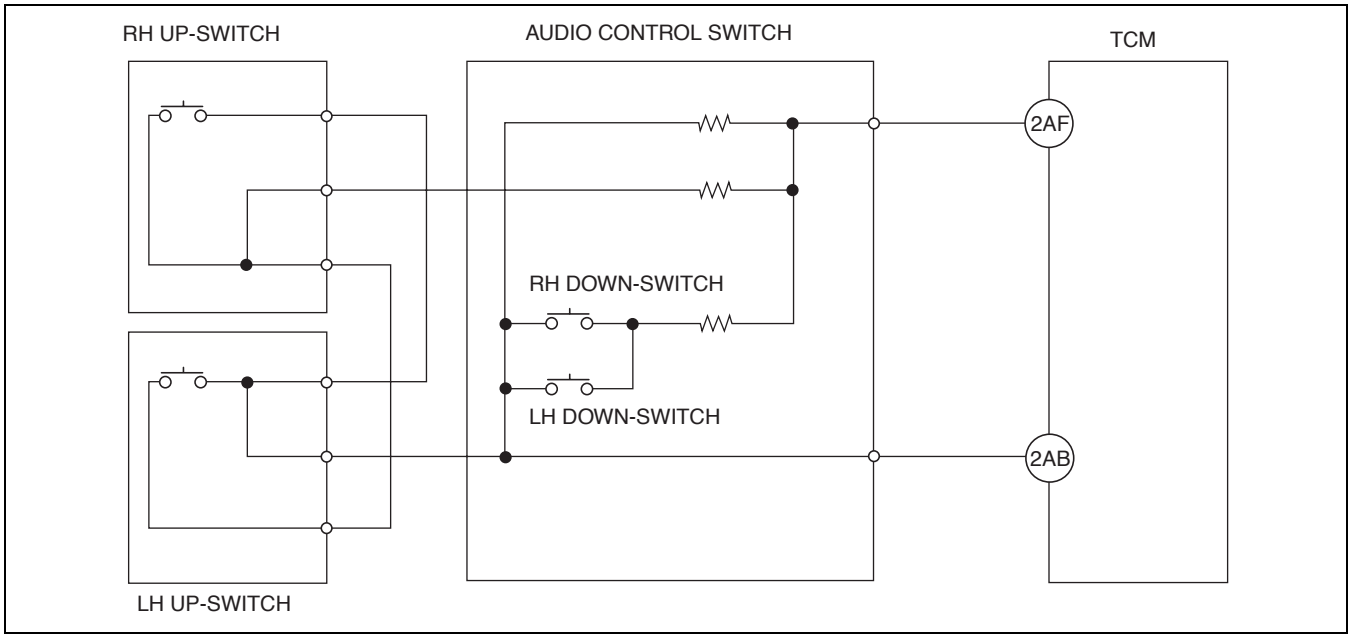

ar8wzn00000105

HEATER, VENTILATION & AIR CONDITIONING (HVAC)

07 SECTION

OUTLINE 07-00
ON-BOARD DIAGNOSTIC 07-02
CONTROL SYSTEM [FULL-AUTO AIR CONDITIONER] 07-40

07-00 OUTLINE

HVAC ABBREVIATION 07-00–1
HVAC FEATURES 07-00–1
HVAC SPECIFICATIONS [FULL-AUTO AIR CONDITIONER] . . . 07-00–1
Basic System 07-00–1
Control System. 07-00–2

HVAC ABBREVIATION

id070000100100

A/C	Air Conditioning
B+	Battery Positive Voltage
CPU	Central Processing Unit
DTC	Diagnostic Trouble Code
ECT	Engine Coolant Temperature
HI	High
IG	Ignition
LO	Low
M	Motor
MAX	Maximum
OFF	Switch Off
ON	Switch On
PCM	Powertrain Control Module
REC	Recirculate
SW	Switch

HVAC FEATURES

id070000100200

Improved marketability	• Full-auto air conditioner adopted

HVAC SPECIFICATIONS [FULL-AUTO AIR CONDITIONER]

id0700001003a1

Basic System

Item			Specification
Heating capacity		(kW {kcal/h})	4.400 {3,784}
Cooling capacity		(kW {kcal/h})	4.500 {3,870}
Refrigerant	Type		R-134a
	Regular amount (approx. quantity)	(g {oz})	430 {15.2}

Item			Specification
A/C compressor	Type		Scroll type
	Discharge capacity (ml {cc, fl oz})		60 {60, 2.03}
	Max. allowable speed (rpm)		9,000
	Lube oil	Type	DENSO OIL8
		Sealed volume (approx. quantity) (ml {cc, fl oz})	60 {60, 2.03}
Condenser	Type		Multiflow (sub-cooling type)
	Radiated heat (kW {kcal/h})		7.0 {6,020}
	Receiver/drier capacity (ml {cc, fl oz})		190 {190, 6.42}
	Desiccant		XH-9
Expansion valve	Type		External pressure equalizer
Evaporator	Type		Double-tank drawn cup
Temperature control			Reheat full air mix type

Control System

Item		Specification
Airflow volume (during heater operation)	Blower motor (m^3/h)	300
Electricity consumption (during heater operation)	Blower motor (W)	220
Airflow volume (during air conditioner operation)	Blower motor (m^3/h)	460
Electricity consumption (during air conditioner operation)	Blower motor (W)	220
	Magnetic clutch (W)	35
Magnetic clutch clearance (approx. quantity) (mm {in})		0.20—0.45 {0.008—0.017}
Fan type	Blower motor	Sirocco fan
Refrigerant pressure switch	Type	Triple-pressure
	Operating pressure (MPa {kgf/cm^2, psi})	HI AND LO PRESSURE ON: 0.18—0.22 {1.84—2.24, 26.2—31.9}; 2.94—3.17 {30.0—32.3, 427—459} OFF: 0.196—0.250 {2.0—2.5, 28.5—36.i}; 2.35—2.75 {24.0—28.0, 341—398} MEDIUM PRESSURE ON: 1.11—1.35 {11.4—13.7, 161—195} OFF: 1.44—1.60 {14.7—16.3, 209—232}
Sensor	Solar radiation sensor	Photodiode
	Ambient temperature sensor	Thermistor
	Passenger compartment temperature sensor	
	Evaporator temperature sensor	
Actuator	Air intake actuator	Sliding contact type
	Air mix actuator	Potentiometer type
	Airflow mode actuator	

07-02 ON-BOARD DIAGNOSTIC

ON-BOARD DIAGNOSTIC FUNCTION OUTLINE 07-02–1
Features 07-02–1
ON-BOARD DIAGNOSTIC FUNCTION BLOCK DIAGRAM 07-02–1
Block Diagram 07-02–1
Condition Transition Diagram 07-02–2
ON-BOARD DIAGNOSTIC FUNCTION . . 07-02–3
Malfunction Detection Function 07-02–3
Fail-safe Function 07-02–3
Memory Function 07-02–3
Malfunction Display Function 07-02–4
Present Malfunction Display Mode 07-02–4
Past Malfunction Display Mode 07-02–5
A/C Operation Check Mode 07-02–5

ON-BOARD DIAGNOSTIC FUNCTION OUTLINE

id070200100100

Features

- Includes the on-board diagnostic function and A/C operation check mode. The on-board diagnostic function consists of a malfunction detection function that detects abnormalities in input/output signals, a memory function that stores detected malfunctions, a fail-safe function that prevents mis-operation of output parts where a malfunction is detected, and a malfunction display function that displays detected malfunctions.

ON-BOARD DIAGNOSTIC FUNCTION BLOCK DIAGRAM

id070200100200

Block Diagram

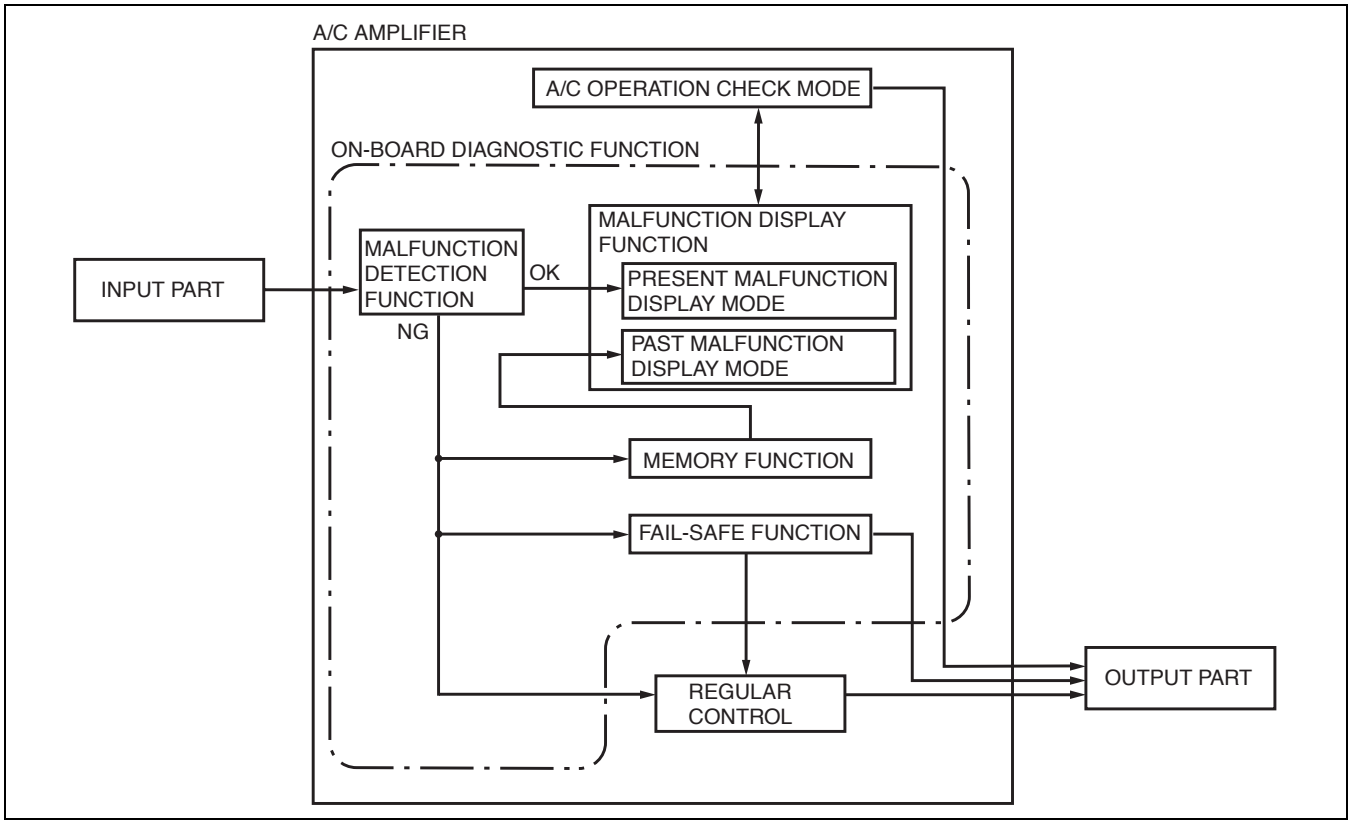

ar8uun00000054

Condition Transition Diagram

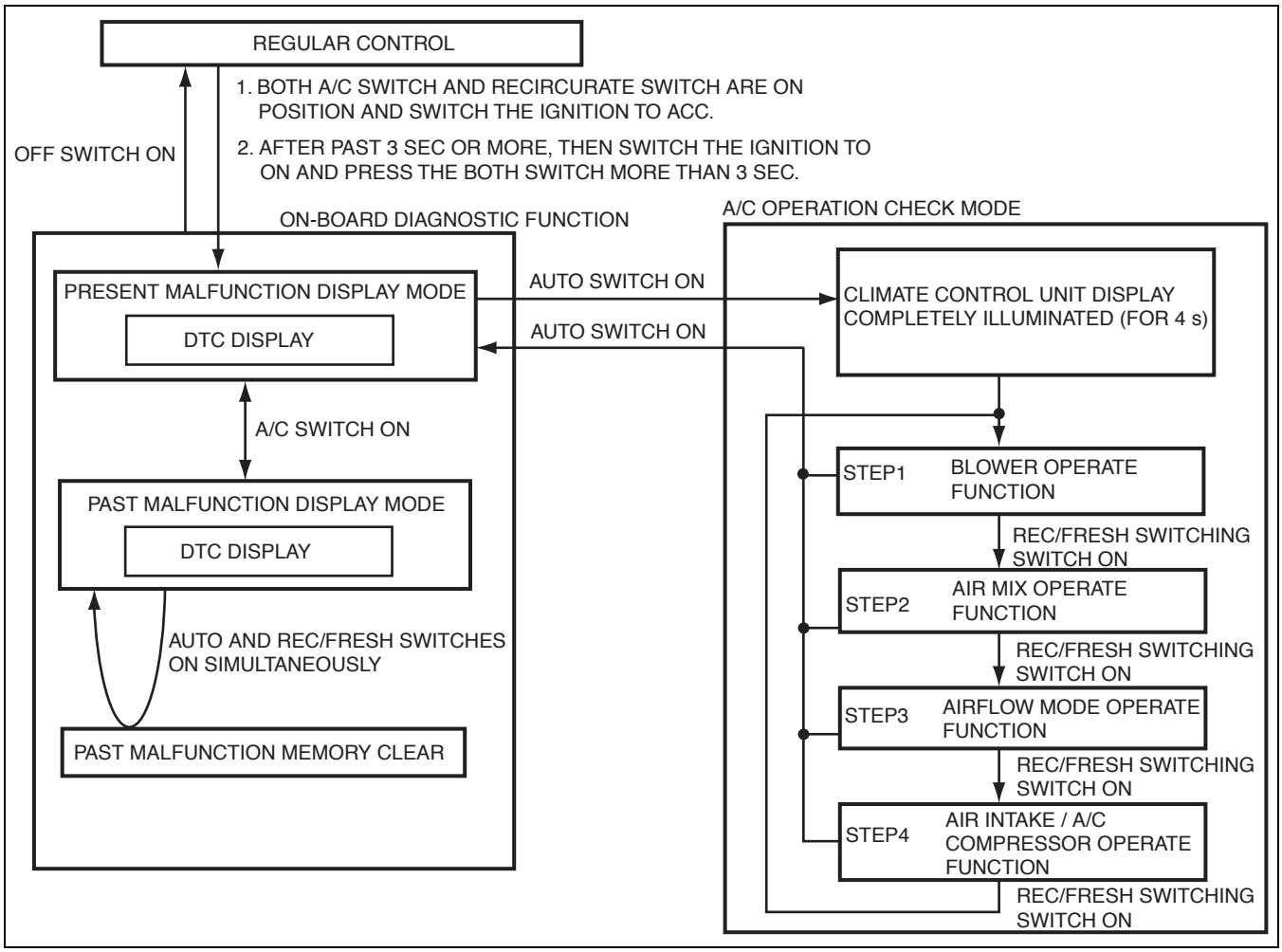

ar8uun00000322

ON-BOARD DIAGNOSTIC FUNCTION

id070200100300

Malfunction Detection Function

- Detects errors in the input and output signals. (The ignition switch is at the ON position or the engine is running.)
- If a malfunction is detected, a DTC is output to the information display through the malfunction display function. At the same time, malfunction detection results are sent to the fail-safe and memory functions.

Fail-safe Function

- If a malfunction is detected by the malfunction detection function and a malfunction is determined, the following controls are performed to prevent mis-operation of the full-auto air conditioner and malfunction of output parts.

Fail-safe Function Table

Malfunction determination part	When malfunction is determined at IG SW ON	When IG SW is turned to ON during malfunction
Passenger compartment temperature sensor	Passenger compartment temperature sensor input value is set at **25 °C {77 °F}**.	←
Ambient temperature sensor	Ambient temperature sensor input value is set at the value just before the malfunction.	←
Evaporator temperature sensor	Evaporator temperature sensor input value is set at **0 °C {32 °F}**.	←
Solar radiation sensor	Solar radiation sensor set value is set at **0 W/m^2**.	←
ECT sensor	ECT sensor input value is set at **80 °C {176 °F}**.	←
Air mix actuator (Potentiometer)	Stops the air mix actuator drive signal at the point a malfunction is determined. However, MAX COLD when the manually set temperatures is at **18.0**, and MAX HOT when the manually set temperature is **32.0**.	←
Airflow mode actuator (Potentiometer)	Stops the mode actuator drive signal at the point a malfunction is determined. However, for manual operation with the airflow mode selector switch, only vent mode is operable. Defroster switch operation is operable	←
Air mix actuator (Motor lock)	Stops the air mix actuator drive signal at the point a malfunction is determined. Then a drive signal is output to the air mix actuator for **approx. every 5 min** and malfunction determination is performed.	After the IG SW is at ON, regular output of the air mix actuator drive signal recommences. Then a drive signal is output to the air mix actuator **approx. every 5 min** and malfunction determination is performed.
Airflow mode actuator (Motor lock)	Stops mode actuator drive signal at the point a malfunction is determined. Then a drive signal is output to the mode actuator **approx. every 5 min** and malfunction determination is performed.	After the IG SW is at ON, regular output of the mode actuator drive signal recommences. Then a drive signal is output to the mode actuator **approx. every 5 min** and malfunction determination is performed.

Memory Function

- Stores the signal determined to be malfunctioning by the malfunction detection function, and the memory cannot be cleared even if the ignition switch is at the LOCK position or the malfunction has been repaired.
- To clear stored malfunction information, press the climate control unit AUTO switch and the REC/FRESH switch simultaneously during past malfunction display mode.

Malfunction Display Function

- Function for outputting present or past malfunctions to the information display as DTCs.
- DTCs are output by turning the ignition switch to the ON position while simultaneously pressing both the A/C switch and the REC/FRESH switch for **3 s or more**.
- Redundant DTCs are output with lower-numbered DTC numbers.

DTC Display Example

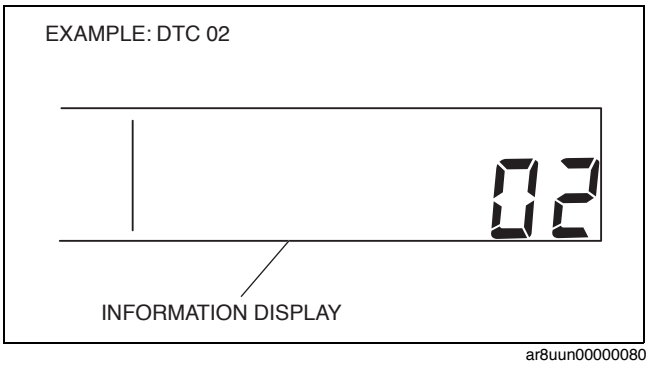

ar8uun00000080

Present Malfunction Display Mode

- Presently occurring malfunctions (open/short circuit) are detected and the DTCs are indicated on the information display.

DTC Table

No.	Output pattern	Malfunction location	Detected condition	Memory function
02	02	Solar radiation sensor (present malfunction)	Solar radiation sensor circuit short	–
06	06	Passenger compartment temperature sensor (present malfunction)	Passenger compartment temperature sensor circuit open/short circuit	–
10	10	Evaporator temperature sensor (present malfunction)	Evaporator temperature sensor circuit open/short circuit	–
12	12	Ambient temperature sensor (present malfunction)	Ambient temperature sensor circuit open/short circuit	–
14	14	ECT sensor (present malfunction)	ECT sensor open/short circuit	–
18	18	Air mix actuator (potentiometer) (present malfunction)	Air mix actuator (potentiometer) circuit open/short circuit	–
21	21	Airflow mode actuator (potentiometer) (present malfunction)	Airflow mode actuator (potentiometer) circuit open/short circuit	–

Past Malfunction Display Mode

- Past occurrence of sensor and other input circuit malfunctions (open/short circuit) are stored and the DTCs indicated in the table are displayed on the information display. Once a past malfunction has been stored and after the malfunctioning part has been repaired, the past malfunction will continue to remain in the memory. Therefore, after repairing, clear the past malfunction from the memory.
- To clear stored past malfunction information, press the climate control unit AUTO switch and the REC/FRESH switch simultaneously during past malfunction display mode.

DTC Table

No.	Output pattern	Malfunction location	Detected condition	Memory function
07	07	Passenger compartment temperature sensor (past malfunction)	When an open/short has occurred in the passenger compartment temperature sensor circuit **1 time or more** in the past	X
11	11	Evaporator temperature sensor (past malfunction)	When an open/short has occurred in the evaporator temperature sensor circuit **1 time or more** in the past	X
13	13	Ambient temperature sensor (past malfunction)	When an open/short has occurred in the ambient temperature sensor circuit **1 time or more** in the past	X
15	15	ECT sensor (past malfunction)	When an open/short has occurred in the ECT sensor circuit **1 time or more** in the past	X
19	19	Air mix actuator (potentiometer) (past malfunction)	When an open/short has occurred in the air mix actuator (potentiometer) circuit **1 time or more** in the past	X
22	22	Airflow mode actuator (potentiometer) (past malfunction)	When an open/short has occurred in the airflow mode actuator (potentiometer) circuit **1 time or more** in the past	X
58	58	Air mix actuator (motor lock) (past malfunction)	When motor lock has occurred in the air mix actuator circuit **1 time or more** in the past	X
59	59	Airflow mode actuator (motor lock) (past malfunction)	When motor lock has occurred in the airflow mode actuator circuit **1 time or more** in the past	X

A/C Operation Check Mode

- The A/C amplifier forces operation of output related moving parts according to the operation check table regardless of the input, while simultaneously displaying changes on the information display that match the A/C amplifier control as well as performing automatic illumination of each switch indicator light. Each transition is verified whether it is as according to the operation check table through visual inspection, listening to operation sound or placing the hand on the blow-off opening to determine a malfunction.

Step	Target part	Operation condition	Monitor display*
1	Blower motor	OFF→1ST→2ND→3RD→4TH→5TH→6TH→7TH	1
2	Air mix door	0 %→50 %→100 %→50 %	20.0 (0%) 20.5 (50%) 21.0 (100%) 20.5 (50%)
3	Airflow mode door	VENT→ BI-LEVEL→ HEAT→ HEAT/DEF→ DEFROSTER	3
4	Air intake door A/C compressor	FRESH ⇔ REC ON ⇔ OFF	4

* : Shown on the information display (at the set temperature display) according to each step.

07-40 CONTROL SYSTEM [FULL-AUTO AIR CONDITIONER]

CONTROL SYSTEM STRUCTURAL VIEW [FULL-AUTO AIR CONDITIONER] 07-40–2
CONTROL SYSTEM WIRING DIAGRAM [FULL-AUTO AIR CONDITIONER] 07-40–3
POWER TRANSISTOR CONSTRUCTION [FULL-AUTO AIR CONDITIONER] 07-40–4
SOLAR RADIATION SENSOR CONSTRUCTION [FULL-AUTO AIR CONDITIONER] 07-40–4
PASSENGER COMPARTMENT TEMPERATURE SENSOR CONSTRUCTION [FULL-AUTO AIR CONDITIONER] 07-40–5
CLIMATE CONTROL UNIT CONSTRUCTION [FULL-AUTO AIR CONDITIONER] 07-40–5
A/C AMPLIFIER FUNCTION [FULL-AUTO AIR CONDITIONER] 07-40–6
Block Diagram **07-40–6**
FULL-AUTO AIR CONDITIONER FUNCTION [FULL-AUTO AIR CONDITIONER] 07-40–7
Control List **07-40–7**
Control Transition Based on Switch Operation **07-40–7**
TARGET TEMPERATURE OUTLINE [FULL-AUTO AIR CONDITIONER] 07-40–8
Features **07-40–8**
TARGET TEMPERATURE BLOCK DIAGRAM [FULL-AUTO AIR CONDITIONER] 07-40–8
TARGET TEMPERATURE OPERATION [FULL-AUTO AIR CONDITIONER] 07-40–9
Target Temperature Calculation **07-40–9**
AIRFLOW TEMPERATURE CONTROL OUTLINE [FULL-AUTO AIR CONDITIONER] 07-40–9
Features **07-40–9**
AIRFLOW TEMPERATURE CONTROL SYSTEM DIAGRAM [FULL-AUTO AIR CONDITIONER] 07-40–9
AIRFLOW TEMPERATURE CONTROL OPERATION [FULL-AUTO AIR CONDITIONER] 07-40–9
Airflow Temperature Automatic Control **07-40–9**
Correction **07-40–10**
AIRFLOW VOLUME CONTROL OUTLINE [FULL-AUTO AIR CONDITIONER] 07-40–10
Features **07-40–10**
AIRFLOW VOLUME CONTROL SYSTEM DIAGRAM [FULL-AUTO AIR CONDITIONER] 07-40–10
AIRFLOW VOLUME CONTROL OPERATION [FULL-AUTO AIR CONDITIONER] 07-40–10
Order of Priority for Controls **07-40–10**
Airflow Volume Automatic Control **07-40–11**
Correction **07-40–12**
Airflow Volume Manual Control **07-40–12**
AIRFLOW MODE CONTROL OUTLINE [FULL-AUTO AIR CONDITIONER] 07-40–12
Features **07-40–12**
AIRFLOW MODE CONTROL SYSTEM DIAGRAM [FULL-AUTO AIR CONDITIONER] 07-40–13
AIRFLOW MODE CONTROL OPERATION [FULL-AUTO AIR CONDITIONER] 07-40–13
Order of Priority for Controls **07-40–13**
Airflow Mode Automatic Control **07-40–13**
Correction **07-40–13**
Airflow Mode Manual Control **07-40–13**
AIR INTAKE CONTROL OUTLINE [FULL-AUTO AIR CONDITIONER] 07-40–14
Features **07-40–14**
AIR INTAKE CONTROL SYSTEM DIAGRAM [FULL-AUTO AIR CONDITIONER] 07-40–14
AIR INTAKE CONTROL OPERATION [FULL-AUTO AIR CONDITIONER] 07-40–14
Order of Priority for Controls **07-40–14**
Air Intake Automatic Control **07-40–14**
Correction **07-40–14**
Air Intake Manual Control **07-40–15**
A/C COMPRESSOR CONTROL OUTLINE [FULL-AUTO AIR CONDITIONER] 07-40–15
Features **07-40–15**
A/C COMPRESSOR CONTROL SYSTEM DIAGRAM [FULL-AUTO AIR CONDITIONER] 07-40–15
A/C COMPRESSOR CONTROL OPERATION [FULL-AUTO AIR CONDITIONER] 07-40–16
Control Flow Chart **07-40–16**
A/C Compressor Automatic Control . . . **07-40–17**
Correction **07-40–17**
A/C Compressor Manual Control **07-40–17**

CONTROL SYSTEM STRUCTURAL VIEW [FULL-AUTO AIR CONDITIONER]

id0740a1100200

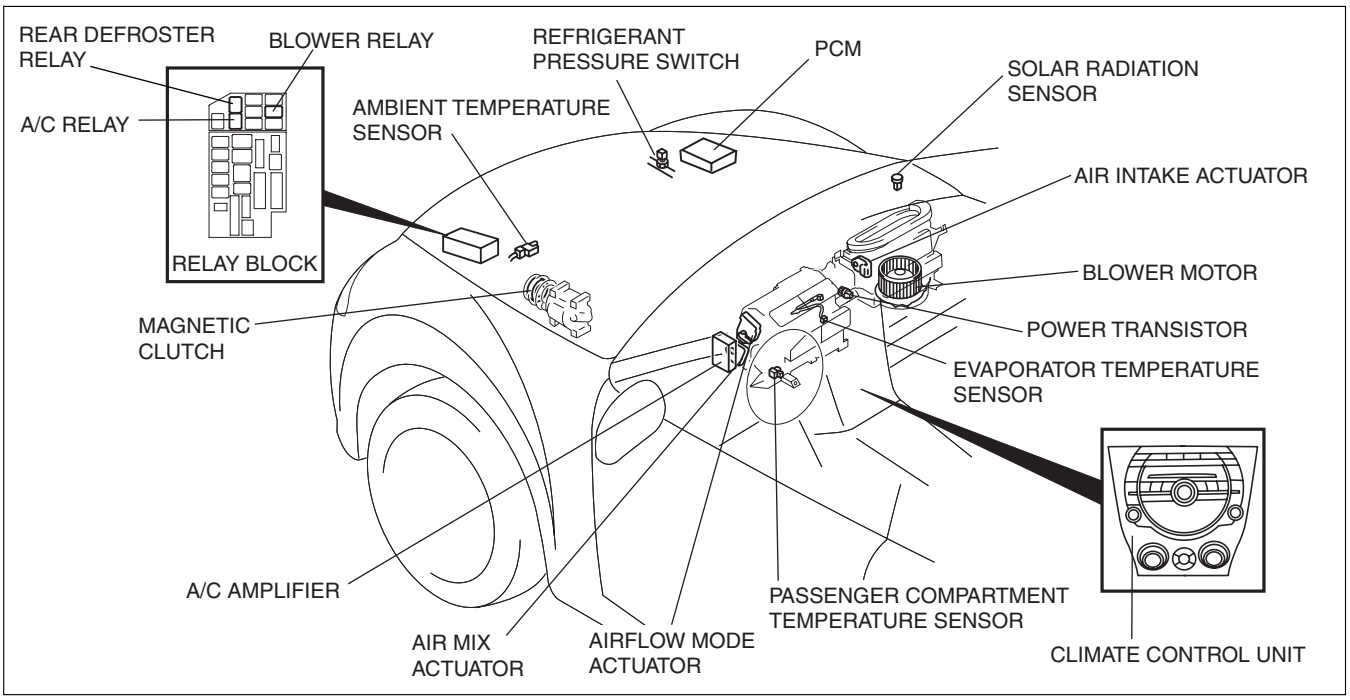

ar8uun00000056

CONTROL SYSTEM WIRING DIAGRAM [FULL-AUTO AIR CONDITIONER]

id0740a1100400

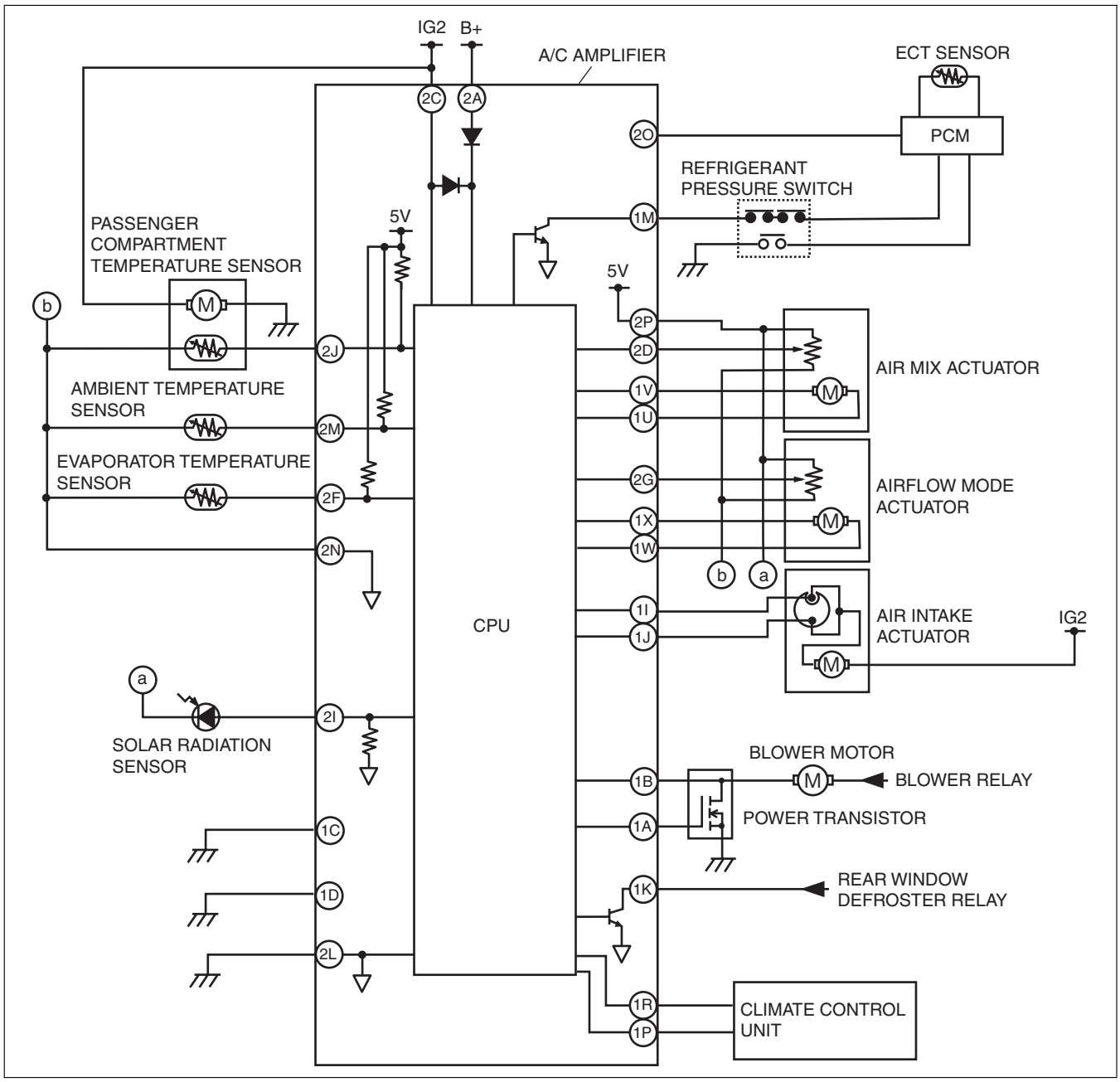

ar8uun00000057

POWER TRANSISTOR CONSTRUCTION [FULL-AUTO AIR CONDITIONER]

id0740a1673400

1. The A/C amplifier calculates the rotation speed of the blower motor based on input from each switch, sensor and the set temperature.
2. The calculated rotation speed is changed to a drive signal (pulse) and is output to the power transistor.
3. The power transistor that receives the signal determines the drive voltage required to operate the motor based on the rotation speed output from the A/C amplifier and outputs it to the power MOS FET.
4. The blower motor rotates at the same time the power MOS FET operates.

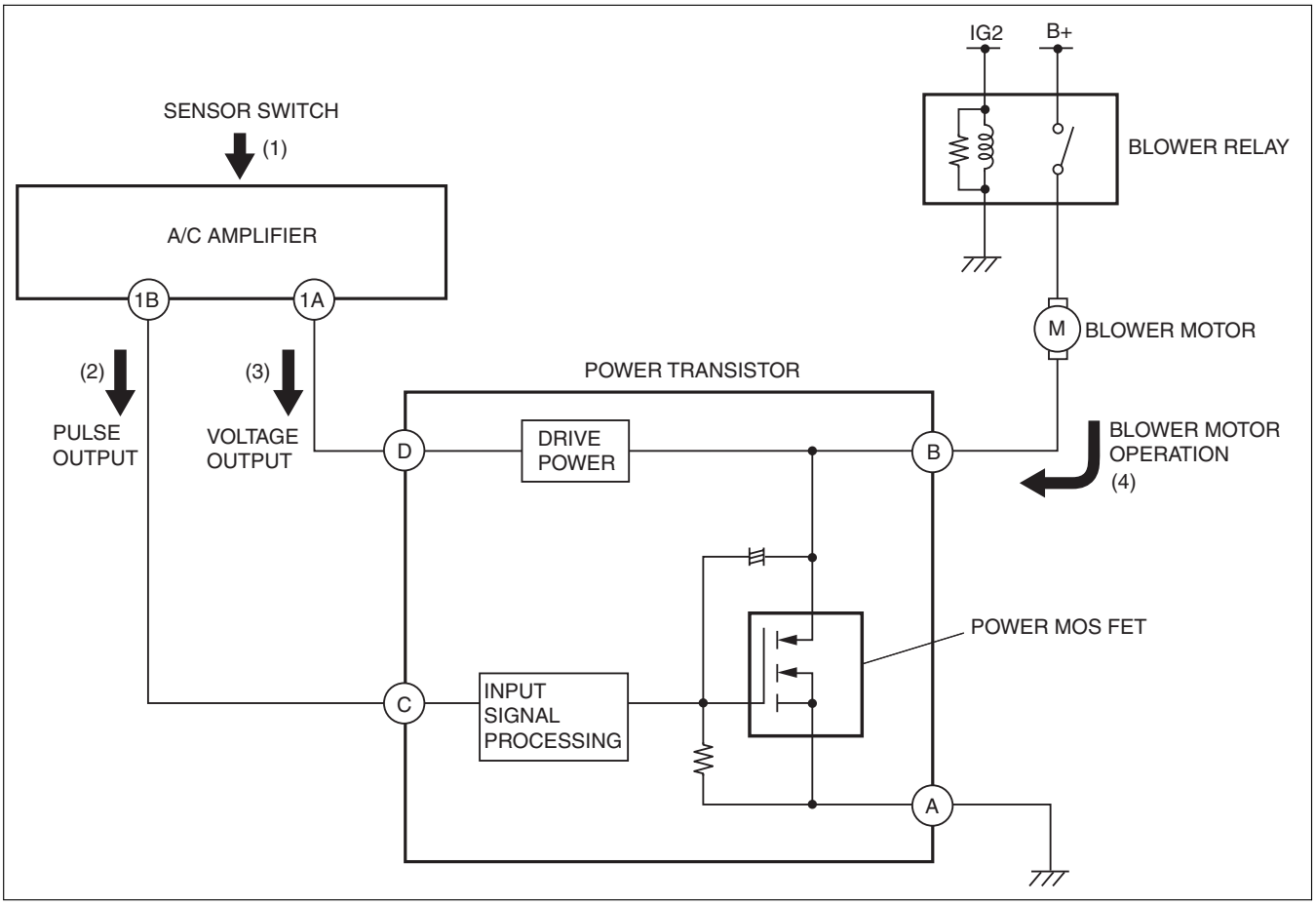

ar8uun00000239

SOLAR RADIATION SENSOR CONSTRUCTION [FULL-AUTO AIR CONDITIONER]

id0740a1103800

- A photo diode (light-receiving diode) has been adopted.

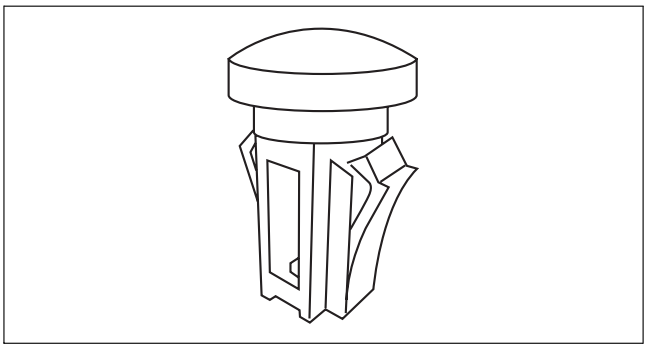

ar8uun00000331

PASSENGER COMPARTMENT TEMPERATURE SENSOR CONSTRUCTION [FULL-AUTO AIR CONDITIONER]

id0740a1103900

- A thermistor type has been adopted.

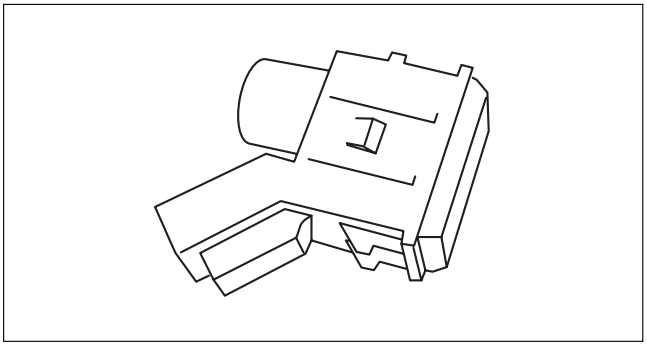

ar8uun00000332

CLIMATE CONTROL UNIT CONSTRUCTION [FULL-AUTO AIR CONDITIONER]

id0740a1100900

- Composed of the following parts:

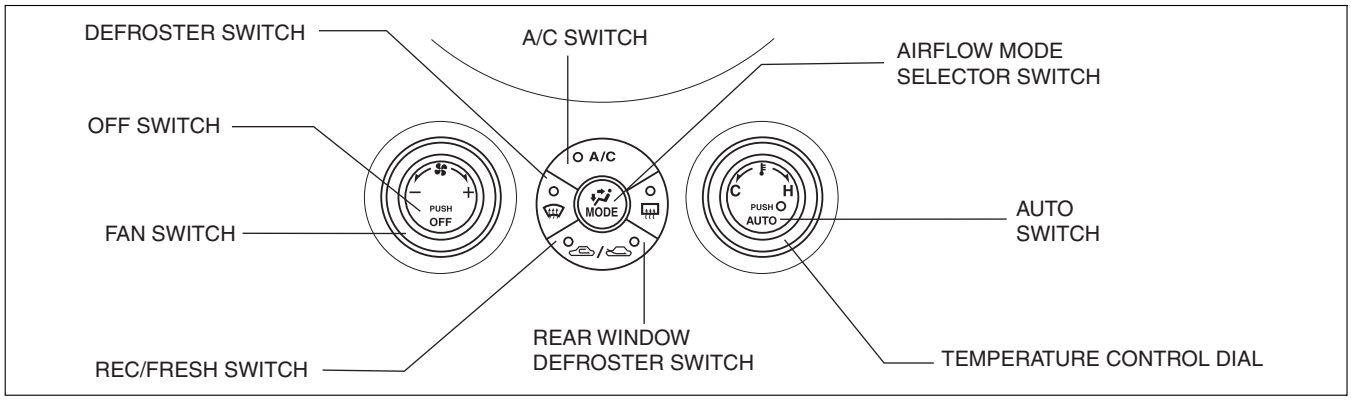

ar8uun00000084

A/C AMPLIFIER FUNCTION [FULL-AUTO AIR CONDITIONER]

id0740a1356300

Block Diagram

- The control system consists of input components (sensors), output components (actuators, magnetic clutch, power transistor, and other parts), and a control device (climate control unit).

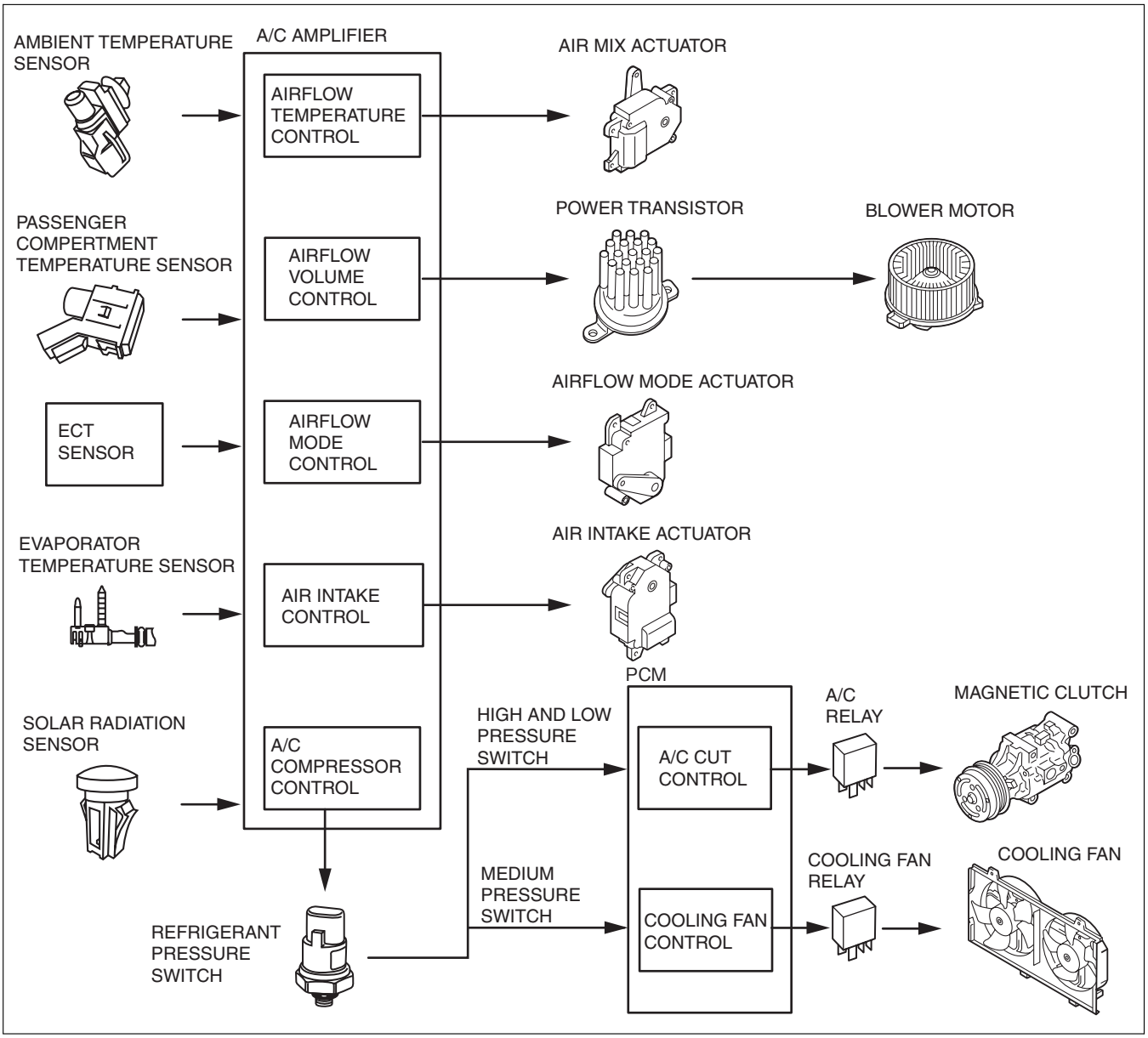

ar8uun00000077

FULL-AUTO AIR CONDITIONER FUNCTION [FULL-AUTO AIR CONDITIONER]

id0740a1100600

Control List

- Function is based on five basic control items and two supplementary function items.

Basic control	Control content	Correction control
Airflow temperature control	Airflow temperature automatic control	• Air mix actuator opening angle correction • MAX HOT and MAX COLD correction
Airflow volume control	Airflow volume automatic control	• Mild start correction • Warm-up correction • MAX HOT and MAX COLD correction • Defroster correction • Ambient temperature • Burn prevention function at start
	Airflow volume manual control	• Defroster correction • Burn prevention at start function
Airflow mode control	Airflow mode automatic control	• Warm-up correction • MAX HOT and MAX COLD correction
	Airflow mode manual control	—
Air intake control	Air intake automatic control	• Defroster correction • MAX HOT and MAX COLD correction
	Air intake manual control	• Defroster correction
A/C compressor control	A/C compressor automatic control	• Defroster correction • Ambient correction (during FRESH mode) • MAX HOT and MAX COLD correction
	A/C compressor manual control	• Defroster correction

Supplemental functions
Fail-safe function
On-board function

Control Transition Based on Switch Operation
Airflow temperature control, airflow volume control

Operation switch		Airflow temperature control	Airflow volume control		
		Control prior to switch operation	Control prior to switch operation		
		Automatic control	Automatic control	Automatic control (Defroster correction)	Manual control
Fan switch	UP	Automatic control	Manual control*2	Manual control*2	Manual control
	DOWN	Automatic control	Manual control*3	Manual control*3	Manual control
Airflow mode selector switch		Automatic control	Automatic control	Condition prior to operation	No change
Defroster		Automatic control	Defroster correction	Condition prior to operation	Automatic control (Defroster correction)
A/C switch		Automatic control	Automatic control	No change	No change
REC/FRESH switch		Automatic control	Automatic control	No change	No change
Temperature control dial	18 (left end)	MAX COLD	HI	HI	No change
	19—31	Automatic control	Automatic control	No change	No change
	32 (right end)	MAX HOT	AUTO HI*1	AUTO HI	No change

*1 : Warm-up correction prioritized
*2 : Increases airflow to a level closer to current condition
*3 : Decreases airflow to a level closer to current condition

Airflow mode control, air intake control, A/C compressor control

Operation switch		Airflow mode control		Air intake control		A/C compressor control	
		Control prior to switch operation		Control prior to switch operation		Control prior to switch operation	
		Automatic control	Manual control	Automatic control	Manual control	Automatic control	Manual control
Fan switch	UP	Automatic control	No change	No change	No change	Automatic control	No change
	DOWN	Automatic control	No change	No change	No change	Automatic control	No change
Airflow mode selector switch		Manual control	Manual control	Manual control*2	No change	Manual control*3	No change*3
Defroster switch		DEFROSTER	DEFROSTER	Defroster correction	Defroster correction	Defroster correction	Defroster correction
A/C switch		Automatic control	No change	Automatic control	No change	Manual control	Manual control
REC/FRESH switch		Automatic control	No change	Manual control	Manual control	Automatic control	No change
Temperature control dial	18 (left end)	Automatic control	No change	Automatic control	No change	Automatic control	No change
	19—31	Automatic control	No change	Automatic control	No change	Automatic control	No change
	32 (right end)	Automatic control	No change	Automatic control	No change	Automatic control	No change

*1 : Warm-up correction prioritized
*2 : If operated during defroster mode, returns to condition prior to defroster selection. However, if the REC/FRESH switch is operated during defroster mode, there is no change.
*3 : If operated during defroster mode, returns to condition prior to defroster selection. However, if the A/C switch is operated during defroster mode, there is no change.

TARGET TEMPERATURE OUTLINE [FULL-AUTO AIR CONDITIONER]

id0740a1105800

Features

- The A/C amplifier calculates the target temperature (temperature to stabilize set temperature) based on input from each sensor and the temperature control dial to control each actuator and the blower motor.

TARGET TEMPERATURE BLOCK DIAGRAM [FULL-AUTO AIR CONDITIONER]

id0740a1105600

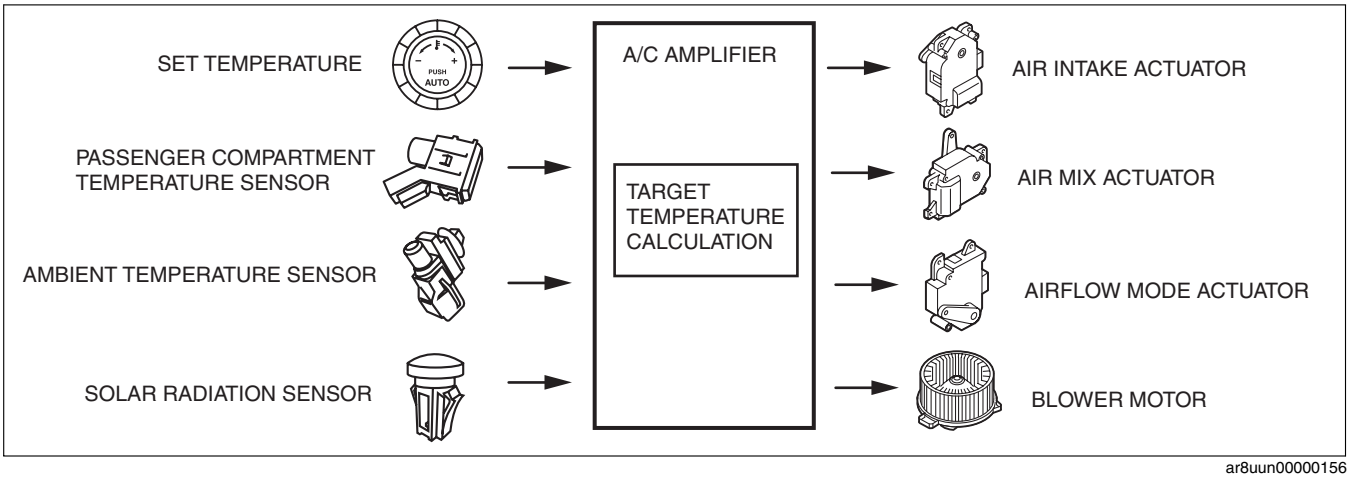

ar8uun00000156

TARGET TEMPERATURE OPERATION [FULL-AUTO AIR CONDITIONER]

id0740a1105700

Target Temperature Calculation

- The target temperature is calculated using the following formula based on input from the cabin temperature sensor, the ambient temperature sensor and the solar radiation sensor, in addition to the temperature set by the climate control unit.
  Target temperature = (K_1 x set temperature) - (K_2 x cabin temperature) - (K_3 x ambient temperature) - (K_4 x solar radiation temperature) + K_5 + C

K_1-K_5: Control coefficient
C : Correction coefficient

AIRFLOW TEMPERATURE CONTROL OUTLINE [FULL-AUTO AIR CONDITIONER]

id0740a1102100

Features

- The airflow temperature is consistently controlled automatically. The A/C amplifier controls the airflow temperature by the air mix actuator.

AIRFLOW TEMPERATURE CONTROL SYSTEM DIAGRAM [FULL-AUTO AIR CONDITIONER]

id0740a1102200

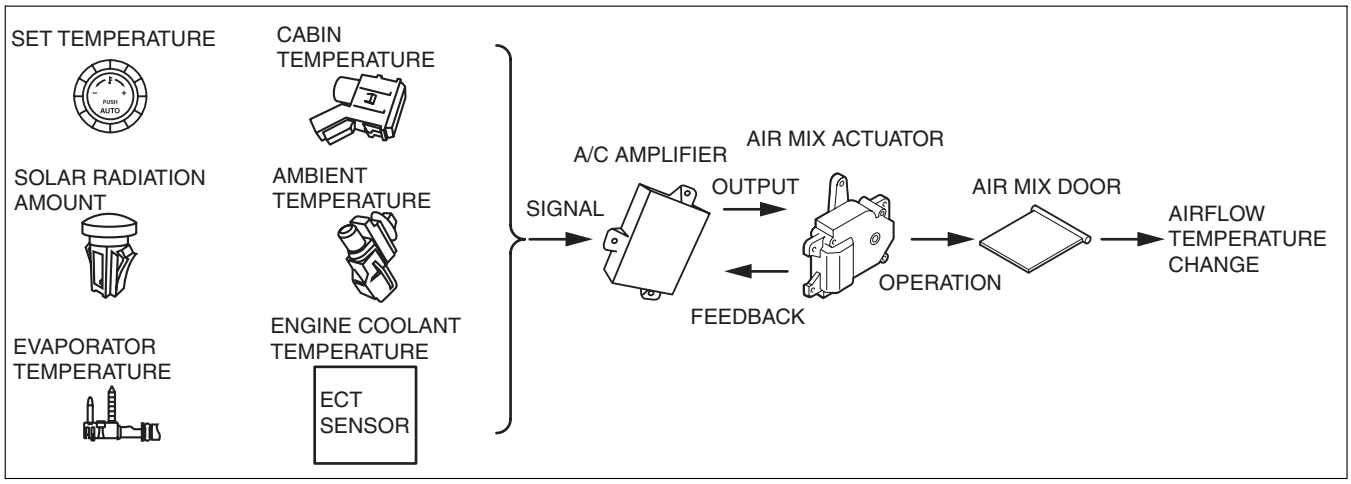

ar8uun00000323

AIRFLOW TEMPERATURE CONTROL OPERATION [FULL-AUTO AIR CONDITIONER]

id0740a1102300

Airflow Temperature Automatic Control

- The A/C amplifier calculates the air mix actuator stop position (airflow temperature) by adding the correction input from the ECT sensor and evaporator temperature sensor to the target temperature that was calculated based on the set temperature and input from each sensor, operating the actuator.
- The actuator stop position moves towards MAX COLD as the input temperature (heater core temperature) from the ECT sensor increases, and it moves towards MAX HOT as the input temperature from the evaporator temperature sensor (evaporator temperature) decreases.

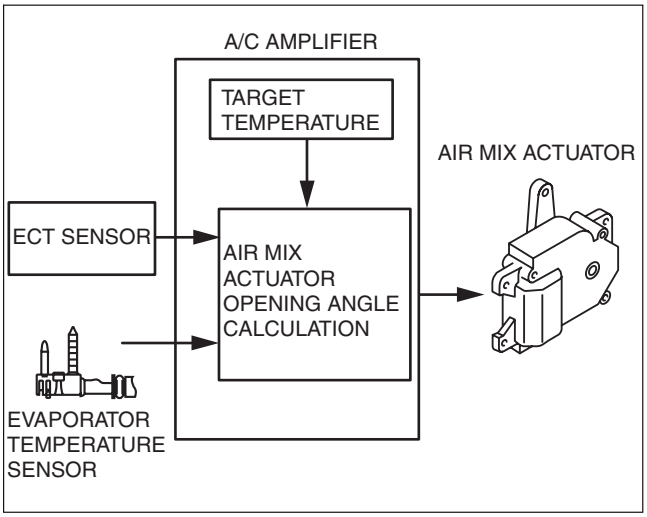

ar8uun00000324

Correction

Air mix actuator stop position correction

- The A/C amplifier maintains the actuator at the stop position calculated based on the position signal from the potentiometer inside the air mix actuator.

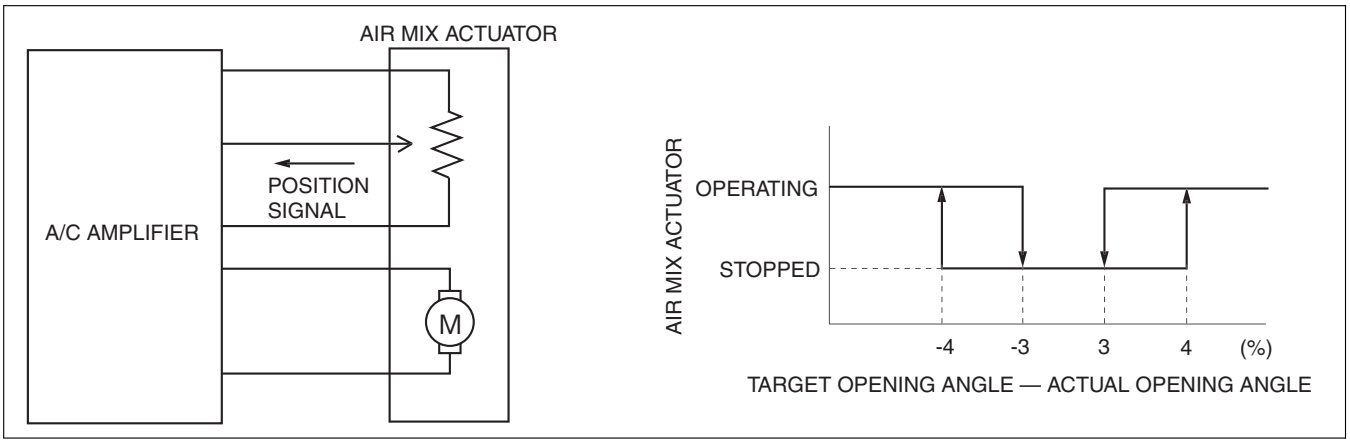

ar8uun00000060

MAX HOT and MAX COLD correction

- When the set temperature is at **32.0**, the air mix actuator becomes MAX HOT, when it is at **18.0**, it becomes MAX COLD.

AIRFLOW VOLUME CONTROL OUTLINE [FULL-AUTO AIR CONDITIONER]

id0740a1102400

Features

- The airflow volume control includes the airflow volume automatic and manual controls, and the A/C amplifier controls the power transistor to adjust the blower air volume.

AIRFLOW VOLUME CONTROL SYSTEM DIAGRAM [FULL-AUTO AIR CONDITIONER]

id0740a1102500

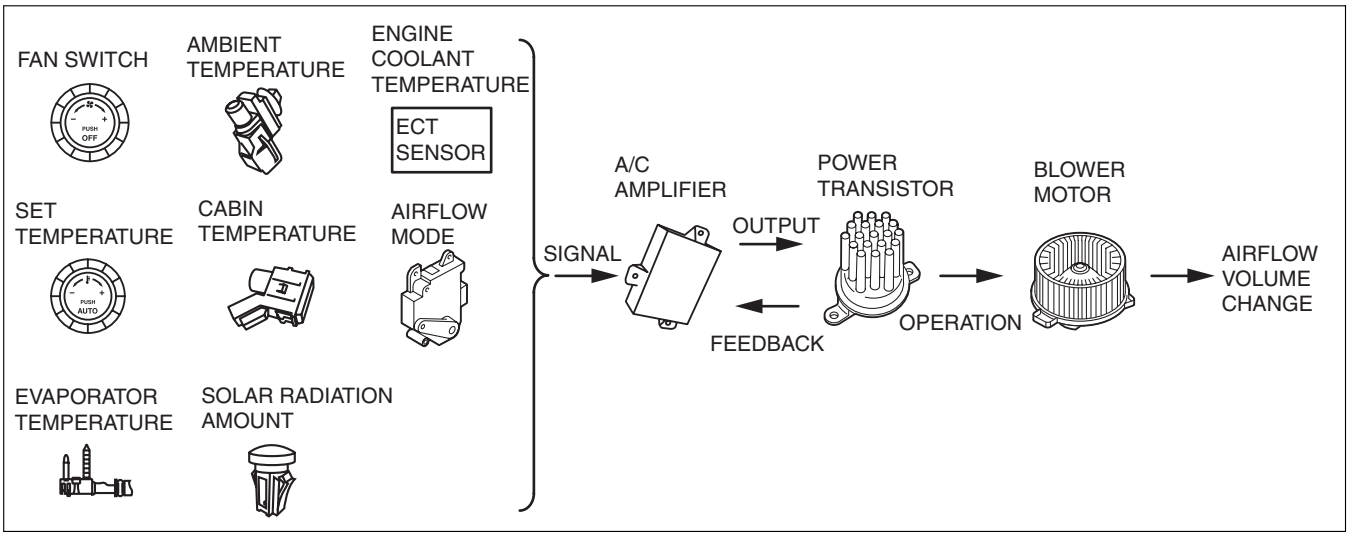

ar8uun00000325

AIRFLOW VOLUME CONTROL OPERATION [FULL-AUTO AIR CONDITIONER]

id0740a1102600

Order of Priority for Controls

1. Blower motor correction at start
2. Airflow volume manual control
3. MAX HOT and MAX COLD correction
4. Airflow volume automatic control

Airflow Volume Automatic Control

- The A/C amplifier calculates the applied voltage to the blower motor based on the input from the solar radiation sensor and the target temperature, and outputs the drive signal to the power transistor. However, the warm-up correction and the mild start correction take precedence under the operation conditions of the warm-up correction and the mild start correction.

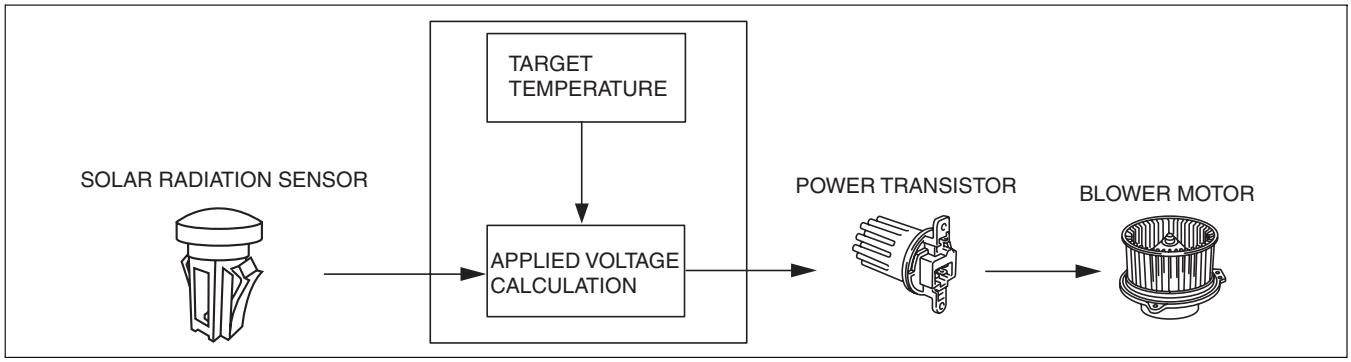

ar8uun00000326

- Applied voltage to the blower motor is as follows.

Air volume level	Blower motor applied voltage (V)
1	3.4
2	3.7
3	4.1
4	4.4
5	4.7
6	5.0
7	5.3
8	5.7
9	6.0
10	6.3
11	6.6
12	7.0
13	7.3
14	7.6
15	7.9
16	8.2
17	8.5
18	8.9
19	9.2
20	9.5
21	9.8
22	10.1
23	10.5
24	10.8
25	11.1
26	11.4
27	11.7
28	12.1
29	12.4
30	12.7
31 (MAX HI)	B+

Correction

Mild start correction

- Controls blower motor applied voltage for a maximum of **17 s** when the blower motor is started in summer to prevent discomfort caused by a high volume of hot air blown from the blow-off opening. However, the mild start correction is not performed when the airflow is in a mode other than VENT, the A/C mode is off, or the target temperature is high.

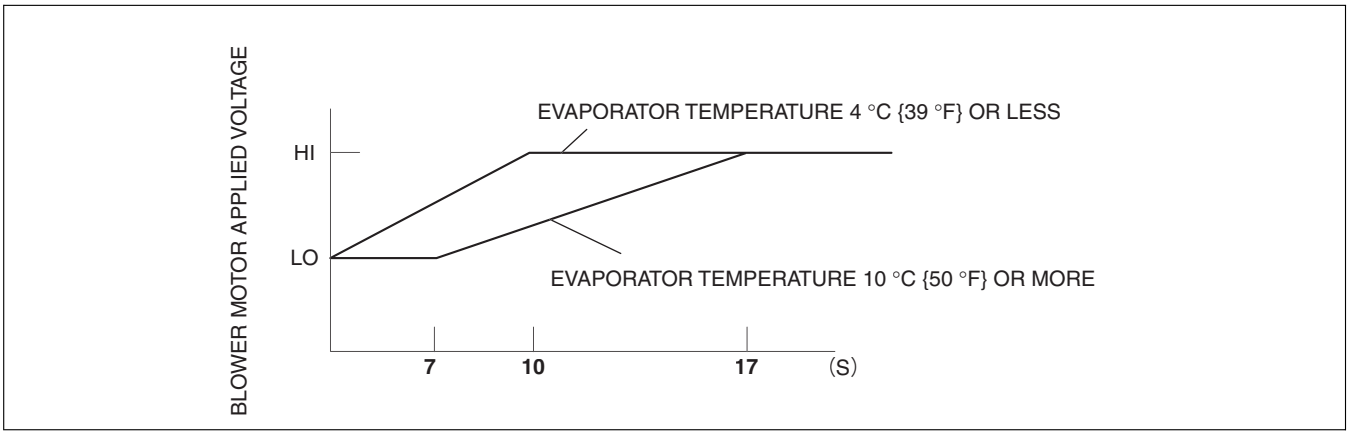

ar8uun00000063

Warm-up correction

- Controls blower motor applied voltage in accordance with the increase in engine coolant temperature to prevent discomfort caused by a high volume of cold air blown from the blow-off opening. However, the warm-up correction is not performed in a mode other than HEAT or HEAT/DEF, or when the target temperature is low.

MAX HOT and MAX COLD correction

- If the set temperature is at **32.0** or **18.0**, the blower motor applied voltage is fixed at HI. However, during the warm-up correction, the MAX HOT correction is not performed.

Defroster correction

- When the defroster switch is turned on, air volume is increased by adding blower motor applied voltage (**2 V**) to improve defrosting.

Burn prevention function at start

- If the blower motor is started from a stopped condition with a blower motor applied voltage at **4.0 V or more**, the blower motor applied voltage is fixed at **4.0 V** for **2 s** to prevent blower motor burning due to excess electrical current.

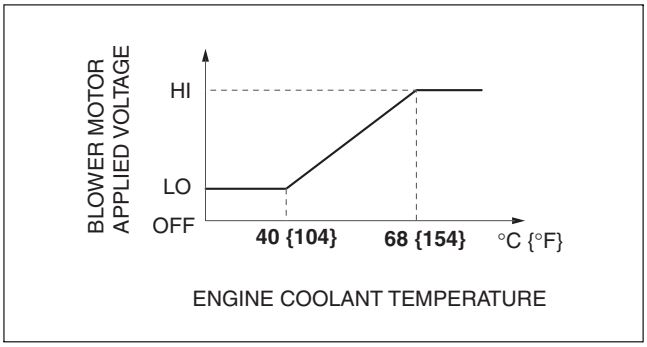

ar8uun00000064

Airflow Volume Manual Control

- The blower motor applied voltage (air volume) can be switched between seven steps by operation of the fan switch.

Fan switch	Blower motor applied voltage
1st speed	3.4 V
2nd speed	5.0 V
3rd speed	6.6 V
4th speed	8.2 V
5th speed	9.8 V
6th speed	11.4 V
7th speed	B+

AIRFLOW MODE CONTROL OUTLINE [FULL-AUTO AIR CONDITIONER]

id0740a1102700

Features

- The airflow mode control includes the airflow mode automatic and manual controls, and the A/C amplifier controls the airflow mode actuator to switch the blower mode.

AIRFLOW MODE CONTROL SYSTEM DIAGRAM [FULL-AUTO AIR CONDITIONER]

id0740a1102800

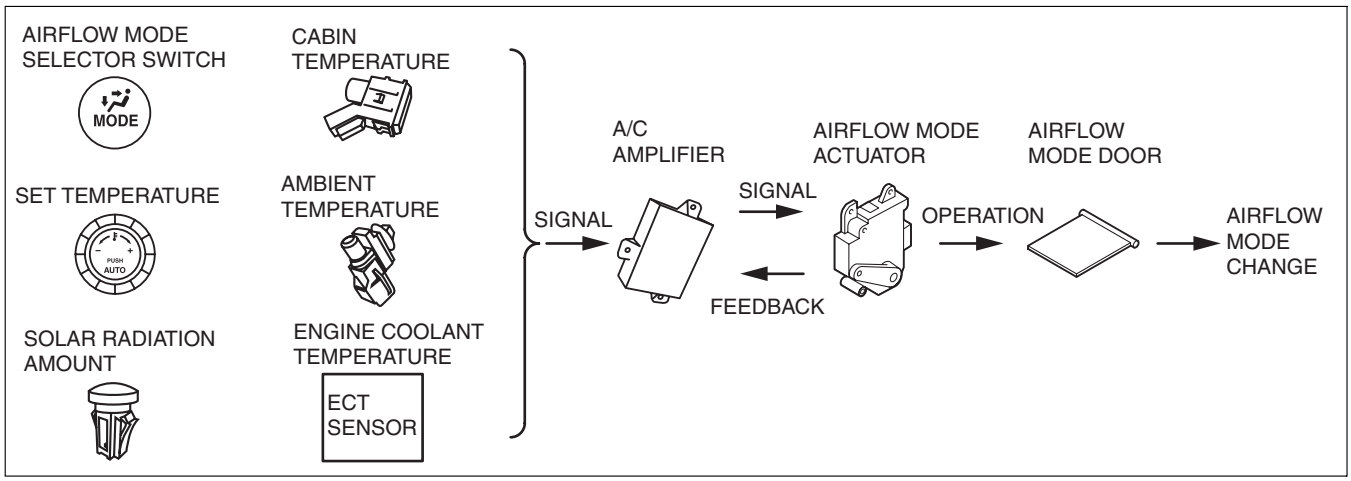

ar8uun00000327

AIRFLOW MODE CONTROL OPERATION [FULL-AUTO AIR CONDITIONER]

id0740a1102900

Order of Priority for Controls

- The airlflow mode control operates according to the following order of priority.
  1. Warm-up correction
  2. Airflow mode manual control
  3. MAX HOT and MAX COLD Correction
  4. Airflow mode automatic control

Airflow Mode Automatic Control

- The A/C amplifier calculates the mode actuator stop position (airflow mode) based on the target temperature operating the actuator.
- If the target temperature is high, the actuator stop position is set to HEAT, if the temperature is low, it is set to VENT.

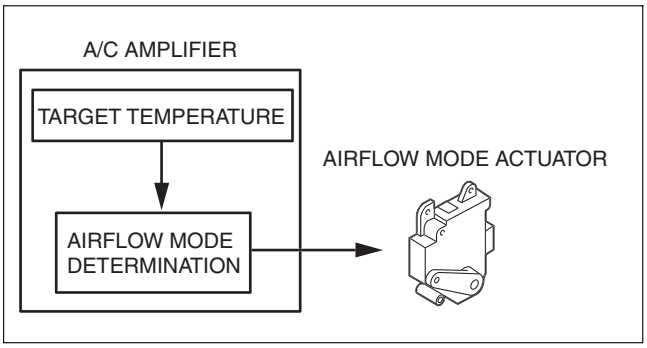

ar8uun00000066

Correction

Warm-up correction

- Switches the airflow mode after the engine is started in accordance with the increase in engine coolant temperature to prevent discomfort caused by cold air blown around the front passenger feet area.

MAX HOT and MAX COLD correction

- When the set temperature is at **32.0**, the airflow mode is set to HEAT, when it is at **18.0**, it is set to vent.

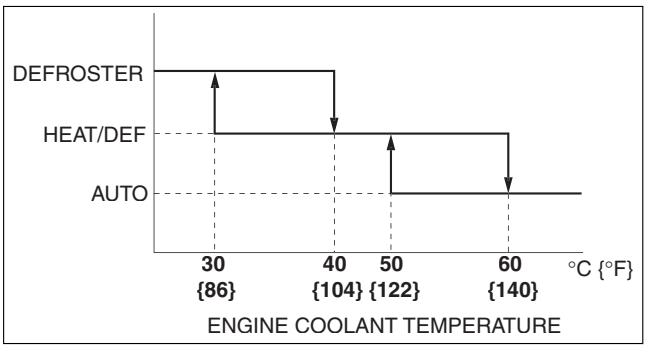

ar8uun00000067

Airflow Mode Manual Control

- The airflow mode can be switched by operating the airflow mode selector switch and the defroster switch.

AIR INTAKE CONTROL OUTLINE [FULL-AUTO AIR CONDITIONER]

id0740a1103300

Features

- The air intake control includes the air intake automatic and manual controls, and the A/C amplifier controls the air intake actuator to switch the air intake mode.

AIR INTAKE CONTROL SYSTEM DIAGRAM [FULL-AUTO AIR CONDITIONER]

id0740a1103400

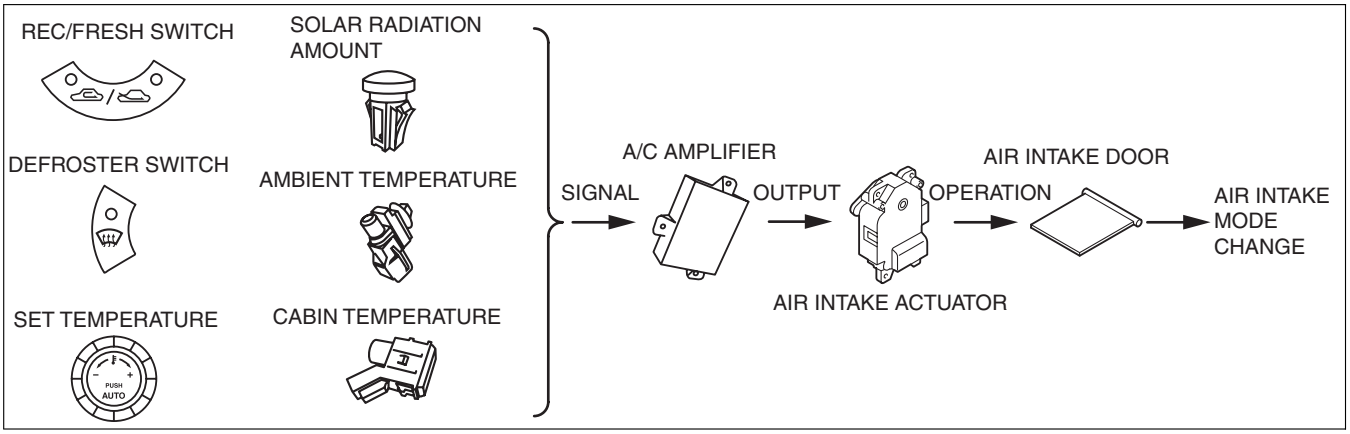

ar8uun00000330

AIR INTAKE CONTROL OPERATION [FULL-AUTO AIR CONDITIONER]

id0740a1103500

Order of Priority for Controls

- The air intake control operates according to the following order of priority.
  1. Air intake manual control
  2. Defroster correction
  3. MAX HOT and MAX COLD correction
  4. Air intake automatic control

Air Intake Automatic Control

- The A/C amplifier calculates the air intake actuator stop position (air intake mode) based on the target temperature operating the actuator.
- If the target temperature is high, the actuator stop position is set to FRESH, if the temperature is low, it is set to REC.

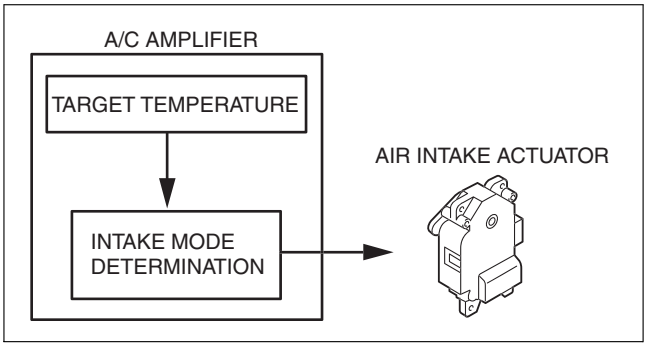

ar8uun00000073

Correction

Defroster correction

- Sets the air intake at FRESH when the airflow mode is set to DEFROSTER, HEAT/DEF for improved defrosting.

MAX HOT, MAX COLD correction

- When the set temperature is at **32.0**, the air intake actuator is at FRESH, when it is at **18.0**, it is set to REC.

Air Intake Manual Control

- The air intake mode can be switched by operation of the REC/FRESH switch.

Air intake mode	REC/FRESH switch operation
FRESH	Sets to FRESH when REC/FRESH switch is turned on during REC mode.
REC	Sets to REC when REC/FRESH switch is turned on during FRESH mode.

A/C COMPRESSOR CONTROL OUTLINE [FULL-AUTO AIR CONDITIONER]

id0740a1103000

Features

- The A/C compressor control includes the A/C compressor automatic and manual controls, and the A/C amplifier sends the A/C signal to the PCM to control the A/C compressor.
- The PCM controls the A/C relay.

A/C COMPRESSOR CONTROL SYSTEM DIAGRAM [FULL-AUTO AIR CONDITIONER]

id0740a1103100

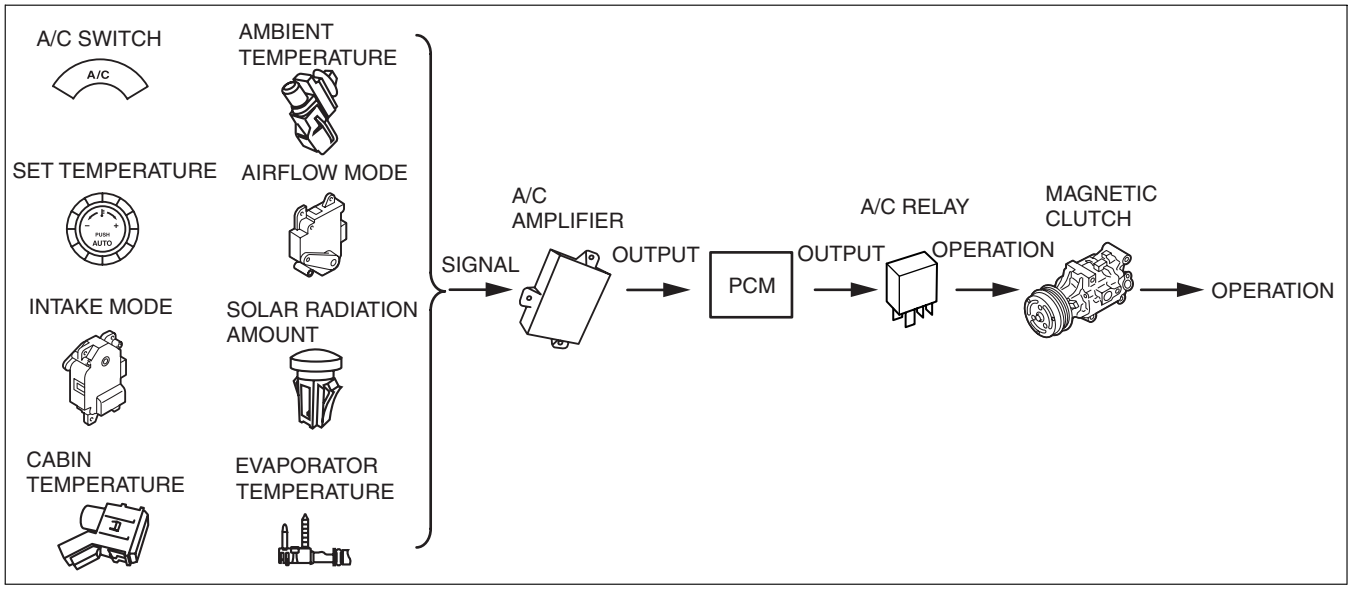

ar8uun00000328

A/C COMPRESSOR CONTROL OPERATION [FULL-AUTO AIR CONDITIONER]

id0740a1103200

Control Flow Chart

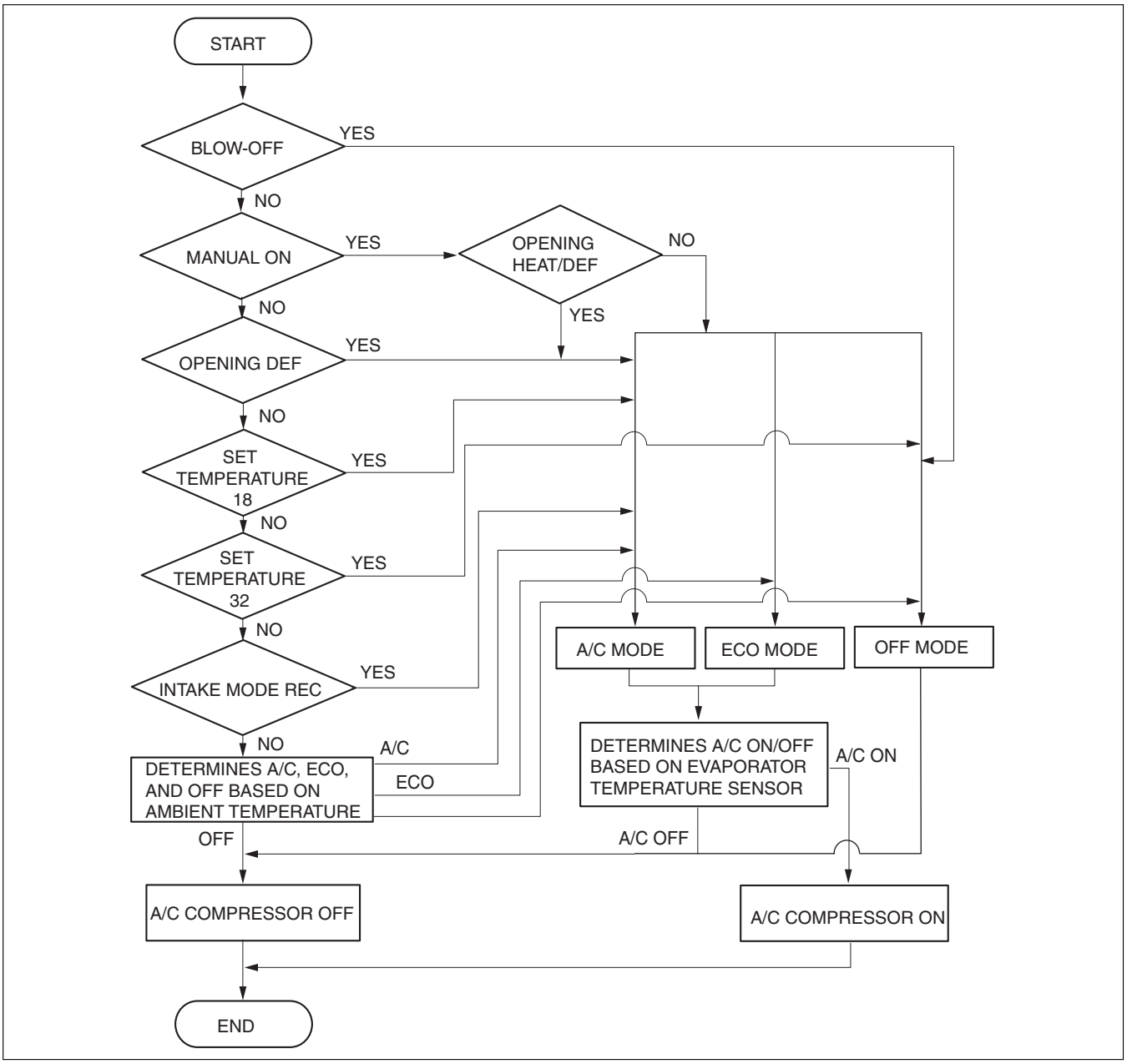

ar8uun00000069

A/C Compressor Automatic Control

- The A/C amplifier switches modes between the A/C mode and ECO mode based on the input signal from the ambient temperature sensor and the air intake mode. When the air intake mode is REC, the system is set to A/C mode. If during FRESH mode the ambient temperature is low or high, the A/C mode is selected, if it is in the medium range ECO mode is selected.
- If the evaporator temperature is at a specific value during ECO mode, the A/C signal is switched on/off (magnetic clutch on/off). When the A/C signal is on/off, the evaporator temperature is determined based on the signal from the ambient temperature sensor and the target temperature. If the target temperature is low, the on/off temperature is set low, if it is high, the on/off temperature is set high. If the ambient temperature is high and increased air conditioning performance is required, or increased defrosting performance is required when windows fog easily due to low ambient temperature, the on/off temperature is set low. When none of the conditions above are applied, the on/off temperature is set high. As a result, A/C performance and fuel economy during A/C operation time have been improved.

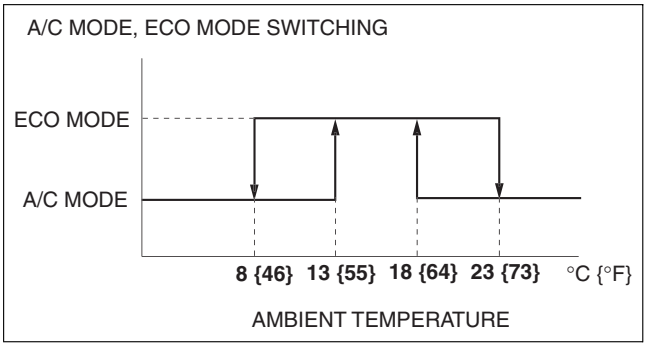

ar8uun00000070

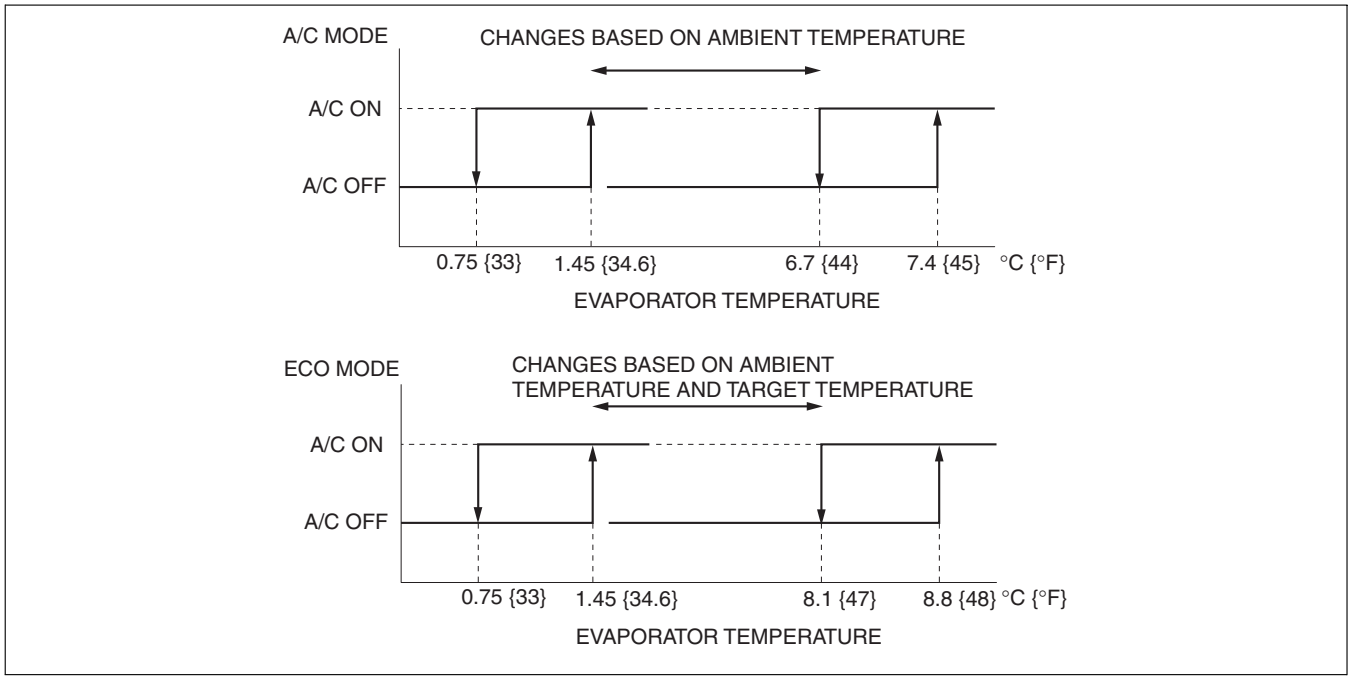

ar8uun00000329

Correction

Defroster correction

- When the defroster switch is turned on, the system is switched to A/C on mode to improve defrosting.

MAX HOT and MAX COLD correction

- When the set temperature is at **32.0**, the system is set to A/C off mode, when it is at **18.0**, it is set to A/C on mode.

A/C Compressor Manual Control

- The A/C on mode or A/C off mode can be selected by operating the A/C switch.

RESTRAINTS

08
SECTION

OUTLINE 08-00
ON-BOARD DIAGNOSTIC 08-02
AIR BAG SYSTEM 08-10

08-00 OUTLINE

RESTRAINTS ABBREVIATIONS. 08-00–1
RESTRAINTS FEATURES 08-00–1

RESTRAINTS ABBREVIATIONS

id080000100100

DLC	Data Link Connector
DTC	Diagnostic Trouble Code
IG	Ignition
LH	Left Hand
PAD	Passenger Air Bag Deactivation
RH	Right Hand
SAS	Sophisticated Air Bag Sensor

RESTRAINTS FEATURES

id080000100200

- The shape of the driver-side air bag module has changed.
- The side air bag module installation position has been changed corresponding to the seat modification.
- The PAD indicator light has been positioned in the information display.

08-02 ON-BOARD DIAGNOSTIC

ON-BOARD DIAGNOSTIC SYSTEM FUNCTION. 08-02–1
DTC Table **08-02–1**

ON-BOARD DIAGNOSTIC SYSTEM FUNCTION

id080200300300

DTC Table

DTC				System malfunction location
M-MDS display	Air bag system warning light			
	Flashing pattern		Priority ranking	
B1013	16		17	Seat weight sensor calibration error
B1017	14		3	Deployment prohibited because configuration is not set
B1231	13		2	SAS control module activation (deployment) control freeze
B1342	—	Continuously illuminated	1	SAS control module (DTC 12 detection circuit malfunction)
B1869	—	Continuously illuminated	1	Air bag system warning light circuit open
	—	Does not illuminate	—	Air bag system warning light circuit short to body ground
B1870	—	Continuously illuminated	1	Air bag system warning light circuit short to power supply
B1877	33		12	Driver-side pre-tensioner seat belt circuit resistance high
B1878				Driver-side pre-tensioner seat belt circuit short to power supply
B1879				Driver-side pre-tensioner seat belt circuit short to body ground
B1881	34		11	Passenger-side pre-tensioner seat belt circuit resistance high
B1882				Passenger-side pre-tensioner seat belt circuit short to power supply
B1883				Passenger-side pre-tensioner seat belt circuit short to body ground
B1884	18		20	Passenger air bag deactivation (PAD) indicator open or short to body ground
B1885	33		12	Driver-side pre-tensioner seat belt circuit resistance low
B1886	34		11	Passenger-side pre-tensioner seat belt circuit resistance low
B1890	18		20	Passenger air bag deactivation (PAD) indicator circuit short to power supply

DTC				System malfunction location
M-MDS display	Air bag system warning light			
	Flashing pattern		Priority ranking	
B1913	19		10	Driver-side air bag module (inflator No.1) circuit short to body ground
	21		9	Passenger-side air bag module (inflator No.1) circuit short to body ground
B1916	19		10	Driver-side air bag module (inflator No.1) circuit short to power supply
B1925	21		9	Passenger-side air bag module (inflator No.1) circuit short to power supply
B1932	19		10	Driver-side air bag module (inflator No.1) circuit resistance high
B1933	21		9	Passenger-side air bag module (inflator No.1) circuit resistance high
B1934	19		10	Driver-side air bag module (inflator No.1) circuit resistance low
B1935	21		9	Passenger-side air bag module (inflator No.1) circuit resistance low
B1992	22		14	Driver-side side air bag module circuit short to power supply
B1993				Driver-side side air bag module circuit short to body ground
B1994				Driver-side side air bag module circuit resistance high
B1995				Driver-side side air bag module circuit resistance low
B1996	23		13	Passenger-side side air bag module circuit short to power supply
B1997				Passenger-side side air bag module circuit short to body ground
B1998				Passenger-side side air bag module circuit resistance high
B1999				Passenger-side side air bag module circuit resistance low
B2228	19		10	Driver-side air bag module (inflator No.2) circuit short to body ground
B2229	21		9	Passenger-side air bag module (inflator No.2) circuit short to body ground
B2230	19		10	Driver-side air bag module (inflator No.2) circuit short to power supply

DTC				System malfunction location
M-MDS display	Air bag system warning light			
	Flashing pattern		Priority ranking	
B2231	21		9	Passenger-side air bag module (inflator No.2) circuit short to power supply
B2232	19		10	Driver-side air bag module (inflator No.2) circuit resistance high
B2233	21		9	Passenger-side air bag module (inflator No.2) circuit resistance high
B2234	19		10	Driver-side air bag module (inflator No.2) circuit resistance low
B2235	21		17	Passenger-side air bag module (inflator No.2) circuit resistance low
B2290	16		17	Passenger sensing system malfunction
B2296	42		8	Crash zone sensor (communication error, internal circuit abnormal)
B2434	51		18	Driver-side front buckle switch circuit short to ground
B2435				Driver-side front buckle switch circuit resistance not within specification
B2438	52		19	Passenger-side front buckle switch circuit short to ground
B2439				Passenger-side front buckle switch circuit resistance not within specification
B2444	43		7	Driver-side side air bag sensor (internal circuit abnormal)
B2445	44		6	Passenger-side side air bag sensor (internal circuit abnormal)
B2477	54		4	Configuration error
B2691	51		18	Driver-side front buckle switch circuit open or short to power supply
B2692	52		19	Passenger-side front buckle switch circuit open or short to power supply

DTC				System malfunction location
M-MDS display	Air bag system warning light			
	Flashing pattern		Priority ranking	
B2773	24		16	Driver-side curtain air bag module circuit resistance low
B2774				Driver-side curtain air bag module circuit resistance high
B2775				Driver-side curtain air bag module circuit short to body ground
B2776				Driver-side curtain air bag module circuit short to power supply
B2777	25		15	Passenger-side curtain air bag module circuit resistance low
B2778				Passenger-side curtain air bag module circuit resistance high
B2779				Passenger-side curtain air bag module circuit short to body ground
B2780				Passenger-side curtain air bag module circuit short to power supply
B2867	31		5	Poor connection of any SAS control module connectors
C1947	49		21	Seat track position sensor circuit short to body ground
C1948				Seat track position sensor circuit resistance not within specification
C1981				Seat track position sensor circuit open or short to power supply
U2017	43		7	Driver-side side air bag sensor (communication error)
U2018	44		6	Passenger-side side air bag sensor (communication error)

08-10 AIR BAG SYSTEM

AIR BAG SYSTEM OUTLINE 08-10–1
AIR BAG SYSTEM STRUCTURAL VIEW 08-10–1
AIR BAG SYSTEM WIRING DIAGRAM . 08-10–2
DRIVER-SIDE AIR BAG MODULE CONSTRUCTION/OPERATION 08-10–3
Inflator Operation **08-10–3**
SIDE AIR BAG MODULE CONSTRUCTION/OPERATION 08-10–4
Construction **08-10–4**
Operation **08-10–4**

AIR BAG SYSTEM OUTLINE

id081000100100

- The shape of the driver-side air bag module has changed.
- The side air bag module installation position has been changed corresponding to the seat modification.
- The PAD indicator light has been positioned in the information display.

AIR BAG SYSTEM STRUCTURAL VIEW

id081000100200

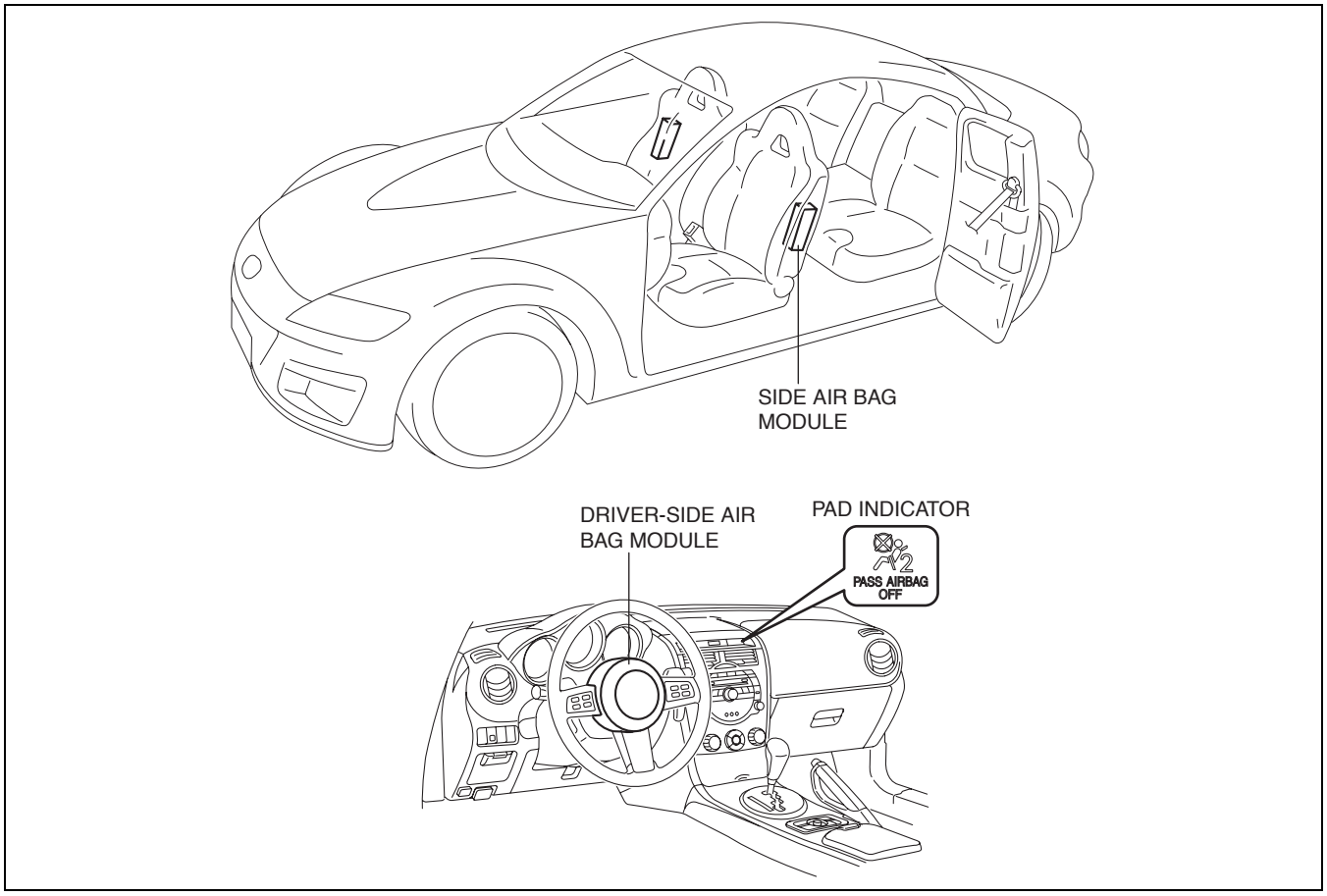

ar8uun00000370

AIR BAG SYSTEM WIRING DIAGRAM

id081000100300

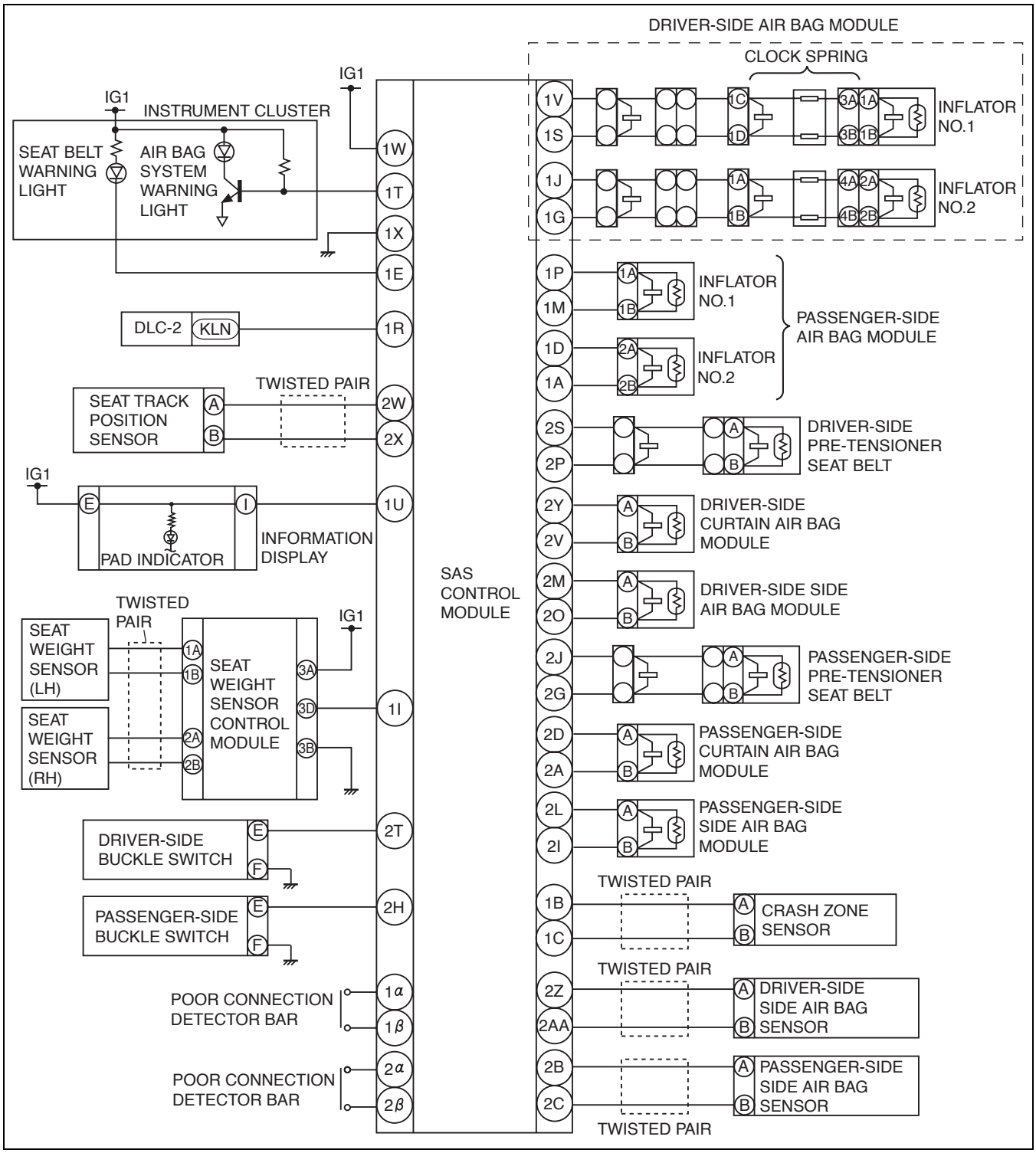

ar8uun00000360

DRIVER-SIDE AIR BAG MODULE CONSTRUCTION/OPERATION

id081000100900

Inflator Operation

Inflator No.1

1. When the driver-side air bag module receives an operation (deployment) signal from the SAS control module, the igniter built into inflator No.1 builds up heat and ignites the inflammation agent.
2. The ignition of the inflammation agent causes the combustion of a gas-generating agent which releases nitrogen gas.
3. The nitrogen gas is cooled at the filter and the filtrate is injected into the air bag.

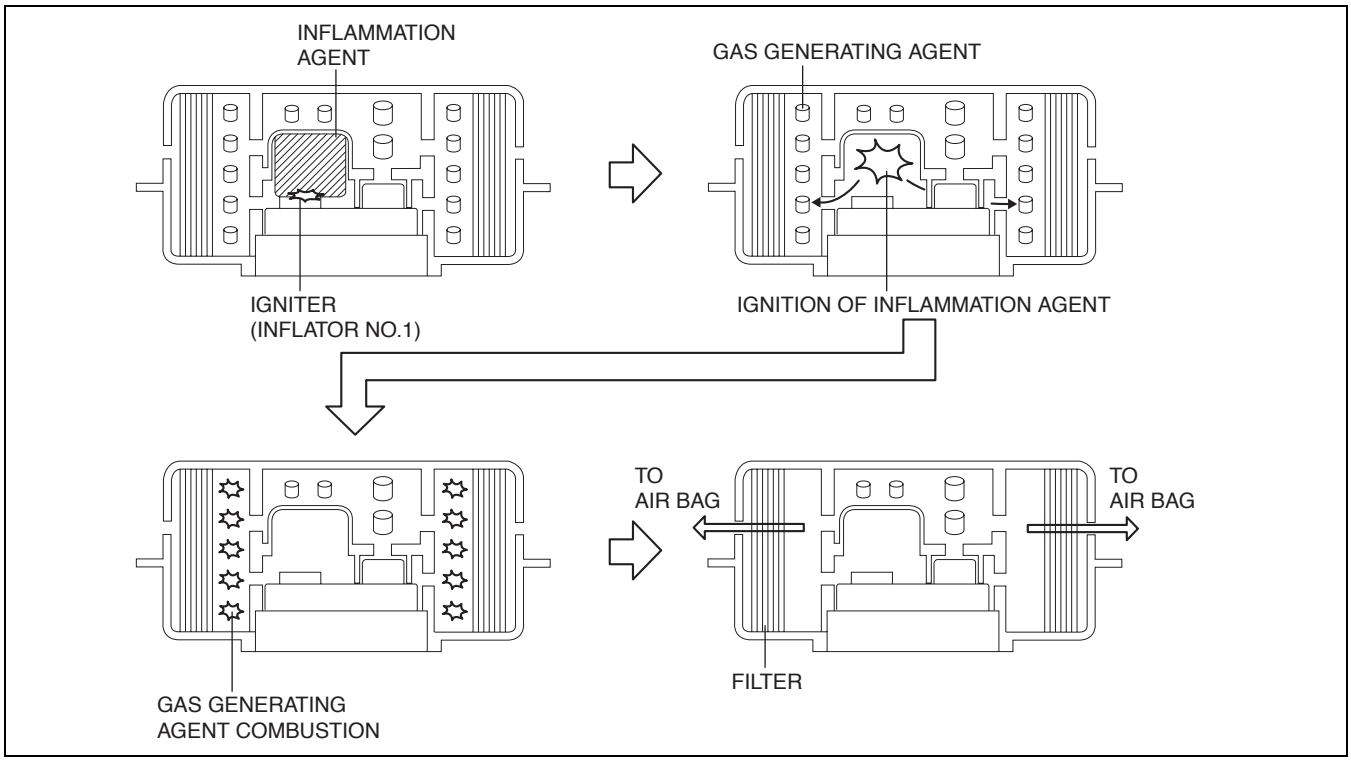

ar8uun00000169

Inflator No.2

1. When the driver-side air bag module receives an operation (deployment) signal from the SAS control module, the igniter built into inflator No.2 builds up heat and ignites the inflammation agent.
2. The ignition of the inflammation agent causes the combustion of a gas-generating agent which releases nitrogen gas.
3. The nitrogen gas is cooled at the filter and the filtrate is injected into the air bag.

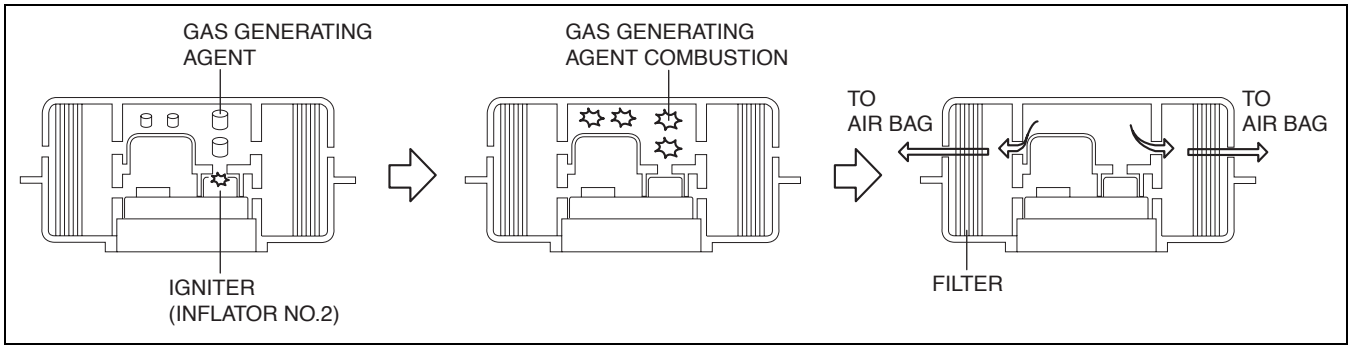

ar8uun00000170

SIDE AIR BAG MODULE CONSTRUCTION/OPERATION

id081000100500

Construction

- Side air bag modules are installed on the outboard sides of the front seat backs.
- The side air bag module is composed of an inflator, module cover and air bag.
- When an air bag deploys, the side air bag module cover is spread apart by the generation of argon gas from the inflator, inflating the air bag.

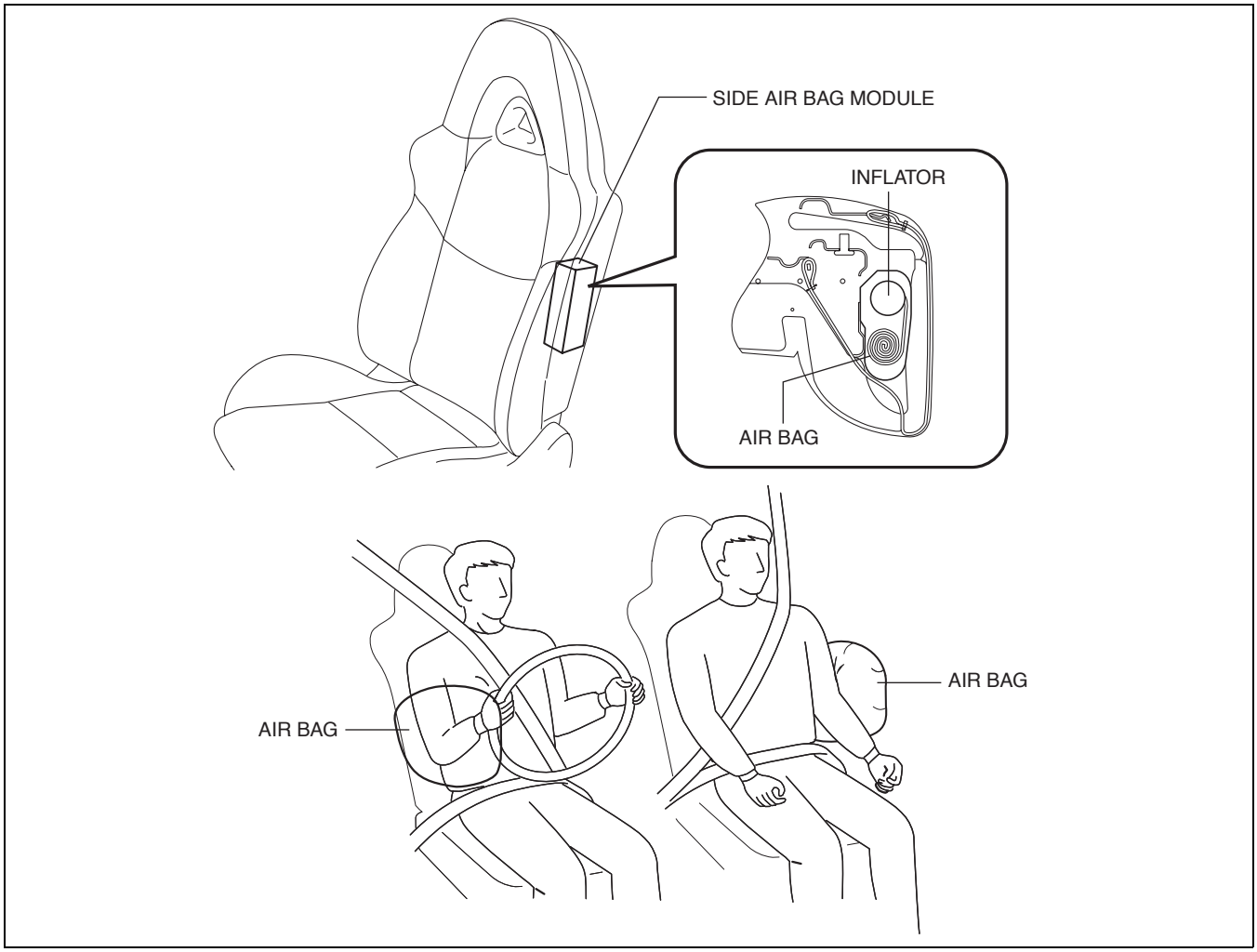

ar8uun00000167

Operation

Inflator operation

1. The igniter built into the inflator begins to build up heat when the operation (deployment) signal is sent from the SAS control module. The inflation agent is ignited by the build up of heat in the igniter.
2. The argon gas expands due to the heat of the ignited inflation agent.
3. The expanding argon gas breaks the discharge barrier, is cooled and filtered by the filter, and then injected into the air bag.

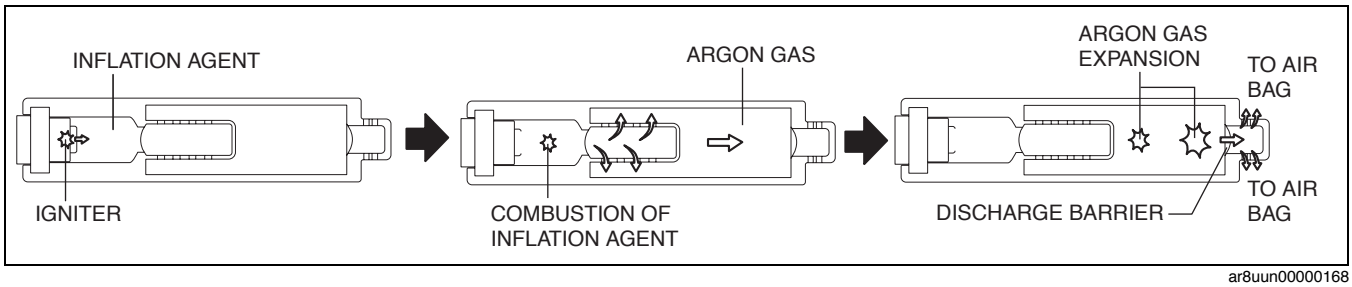

ar8uun00000168

BODY & ACCESSORIES

09
SECTION

OUTLINE 09-00
LIGHTING SYSTEMS 09-18
WIPER/WASHER SYSTEM. . . . 09-19
ENTERTAINMENT 09-20
INSTRUMENTATION/
DRIVER INFO. 09-22
CONTROL SYSTEM 09-40

09-00 OUTLINE

BODY AND ACCESSORIES
ABBREVIATIONS. 09-00–1
BODY AND ACCESSORIES
FEATURES 09-00–1

BODY AND ACCESSORIES ABBREVIATIONS

id090000100100

ABS	Antilock Brake System
ACC	Accessories
AT	Automatic Transmission
BCM	Body Control Module
CAN	Controller Area Network
CM	Control Module
DLC	Data Link Connector
DSC	Dynamic Stability Control
DTC	Diagnostic Trouble Code
EPS	Electric Power Steering
GND	Ground
GPS	Global Positioning System
DRL	Daytime Running Light
HF/TEL	Hands-Free Telephone
HI	High
IG	Ignition
LCD	Liquid Crystal Display
LED	Light Emitting Diode

LF	Left Front
LH	Left Hand
LO	Low
LR	Left Rear
M	Motor
MT	Manual Transmission
OFF	Switch Off
ON	Switch On
PCM	Powertrain Control Module
PID	Parameter Identification
RF	Right Front
RH	Right Hand
RR	Right Rear
SAS	Sophisticated Air Bag Sensor
SW	Switch
TCM	Transmission Control Module
TNS	Tail Number Side Lights
TPMS	Tire Pressure Monitoring System

BODY AND ACCESSORIES FEATURES

id090000100300

Improved marketability	SIRIUS satellite radio system adopted
Improved convenience	• Auto light system adopted • Auto wiper system adopted • Hands-free telephone (HF/TEL) system adopted • Variable red zone has been adopted that changes the red zone display of the engine speed according to the engine coolant temperature.

09-18 LIGHTING SYSTEMS

LIGHTING SYSTEMS OUTLINE 09-18–2
LIGHTING SYSTEMS SPECIFICATION 09-18–2
LIGHTING SYSTEMS STRUCTURAL VIEW 09-18–3
FRONT COMBINATION LIGHT CONSTRUCTION 09-18–4
FRONT FOG LIGHT CONSTRUCTION 09-18–4
AUTO LIGHT SYSTEM OUTLINE 09-18–5
AUTO LIGHT SYSTEM STRUCTURAL VIEW 09-18–5
AUTO LIGHT SYSTEM WIRING DIAGRAM 09-18–6
AUTO LIGHT SYSTEM OPERATION 09-18–8
Operation **09-18–8**
Illumination operation **09-18–9**
Lights off operation **09-18–10**
Fail-Safe Function **09-18–10**
AUTO LIGHT SENSOR FUNCTION 09-18–11
AUTO LIGHT SENSOR OPERATION 09-18–12
Function Description **09-18–13**
AUTO LIGHT-OFF SYSTEM OUTLINE 09-18–13
AUTO LIGHT-OFF SYSTEM WIRING DIAGRAM 09-18–14
Auto Light/wiper Control Module **09-18–14**
AUTO LIGHT-OFF SYSTEM OPERATION 09-18–16
Operation **09-18–16**
Timing Chart **09-18–16**
DRL (DAYTIME RUNNING LIGHT) SYSTEM OUTLINE. 09-18–17
DRL (DAYTIME RUNNING LIGHT) SYSTEM WIRING DIAGRAM 09-18–17
DRL (DAYTIME RUNNING LIGHT) SYSTEM OPERATION 09-18–18
Operation Condition **09-18–18**
Illumination Operation **09-18–19**
FRONT SIDE TURN LIGHT CONSTRUCTION 09-18–20
REAR COMBINATION LIGHT CONSTRUCTION 09-18–20

LIGHTING SYSTEMS OUTLINE

id091800100100

Improved marketability	• A headlight with built-in front turn light, parking light and front side marker light has been adopted for design improvement. • Projector type headlights (low-beam) have been adopted. • Front fog lights have been adopted. (Located in front bumper)
Improved convenience	• Auto light system adopted • Auto light-off system adopted
Improved visibility	• LEDs have been adopted for the brake/taillights. • Built-in front side turn light has been adopted.
System simplification	• An auto light/wiper control module has been adopted in which the auto light, auto wiper, DRL, and auto light-off systems are consolidated.

LIGHTING SYSTEMS SPECIFICATION

id091800100200

Item			Specifications (W) × number
Exterior light bulb capacity	Headlight bulb (high-beam)		65 × 2
	Headlight bulb (low-beam)	Discharge headlight bulb	35 × 2
		Halogen headlight bulb	55 × 2
	Front turn /parking light bulb		27/8 × 2
	Front fog light bulb		51 × 2
	Front side turn light bulb		5 × 2
	Brake/taillight (LED)		2.3/0.2× 2
	Rear turn light bulb		21 × 2
	Rear side marker light bulb		5 × 2
	Back-up light bulb		16 × 2

LIGHTING SYSTEMS STRUCTURAL VIEW

id091800100300

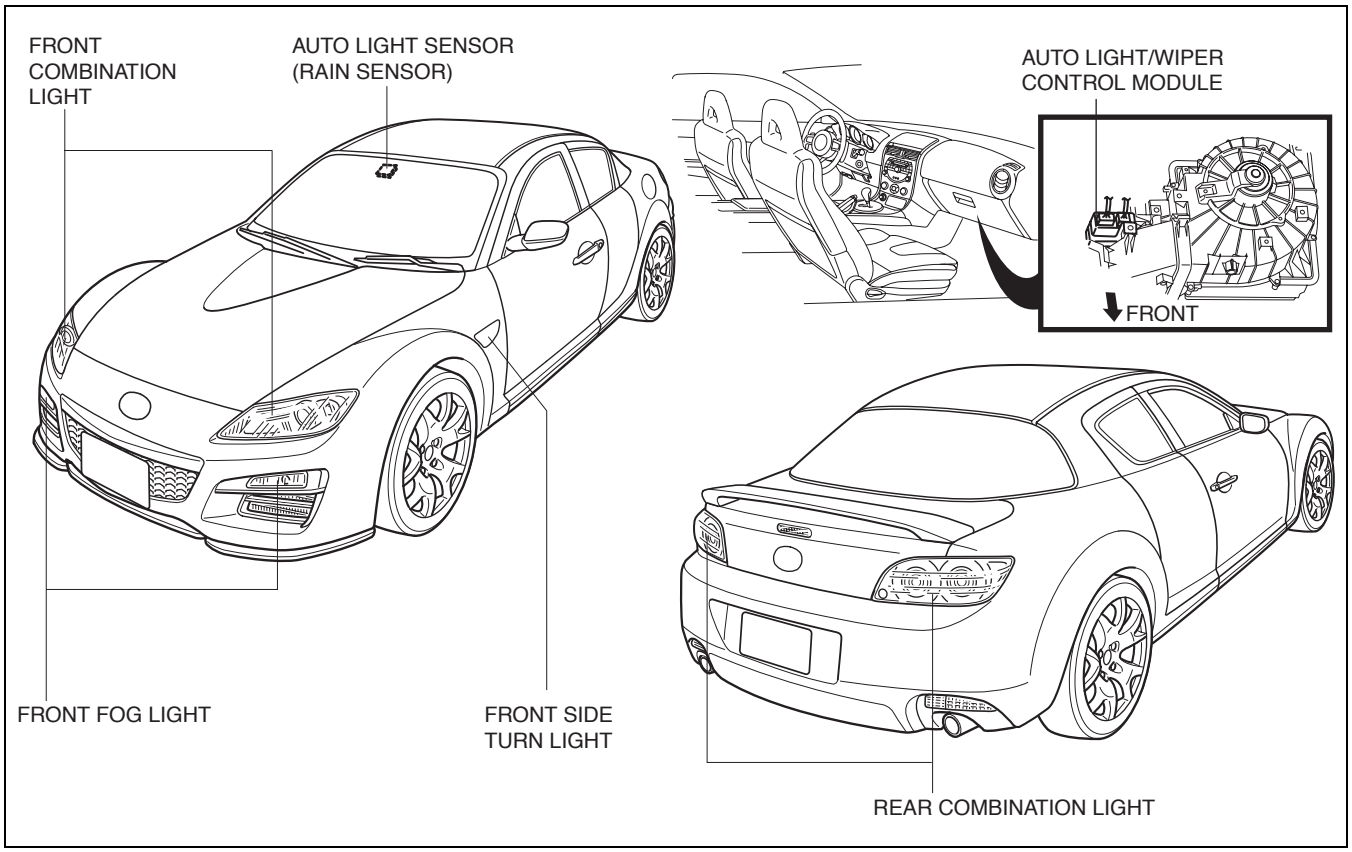

ar8uun00000291

FRONT COMBINATION LIGHT CONSTRUCTION

id091800100700

- A headlight with built-in front turn/parking light has been adopted for design improvement.
- Projector type headlights have been adopted.
- Discharge headlights, with a wide illumination area and projection of white light with a hue similar to sunlight, have been adopted.

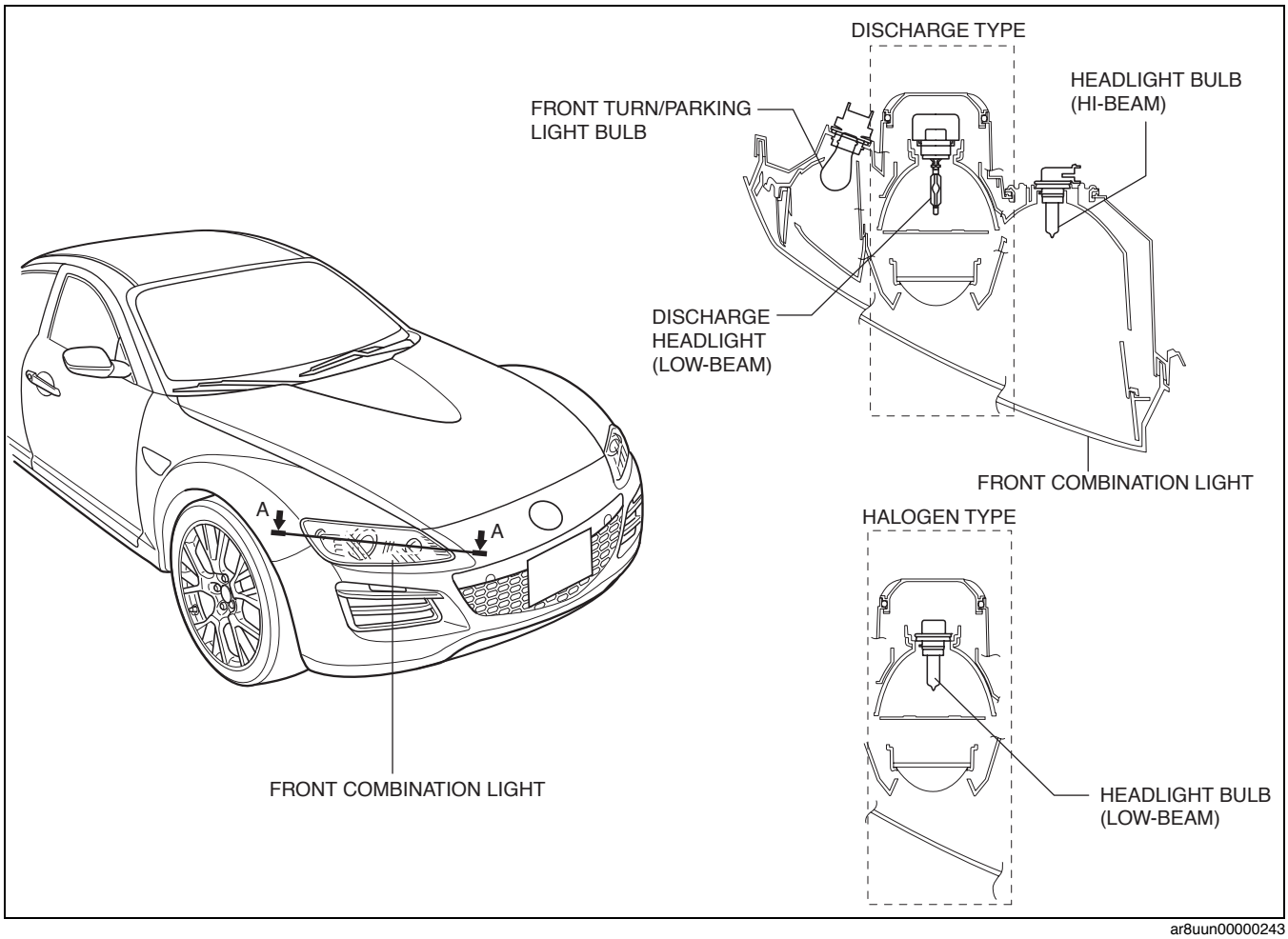

ar8uun00000243

FRONT FOG LIGHT CONSTRUCTION

id091800105900

- The bumper built-in type front fog light with the aiming adjustment function has been adopted.

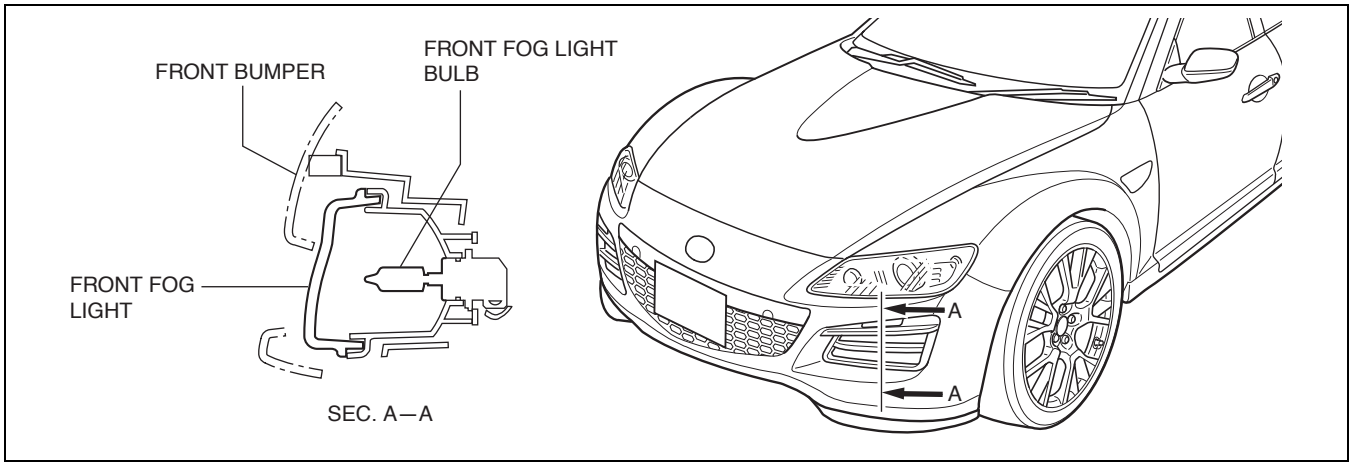

ar8uun00000244

AUTO LIGHT SYSTEM OUTLINE

id091800101800

- An auto light system that automatically illuminates and turns off the headlights in any situation according to the level of light outside of the vehicle has been adopted.
- An auto light/wiper control module has been adopted in which the auto light, auto wiper, DRL, and auto light-off systems are consolidated.

AUTO LIGHT SYSTEM STRUCTURAL VIEW

id091800101900

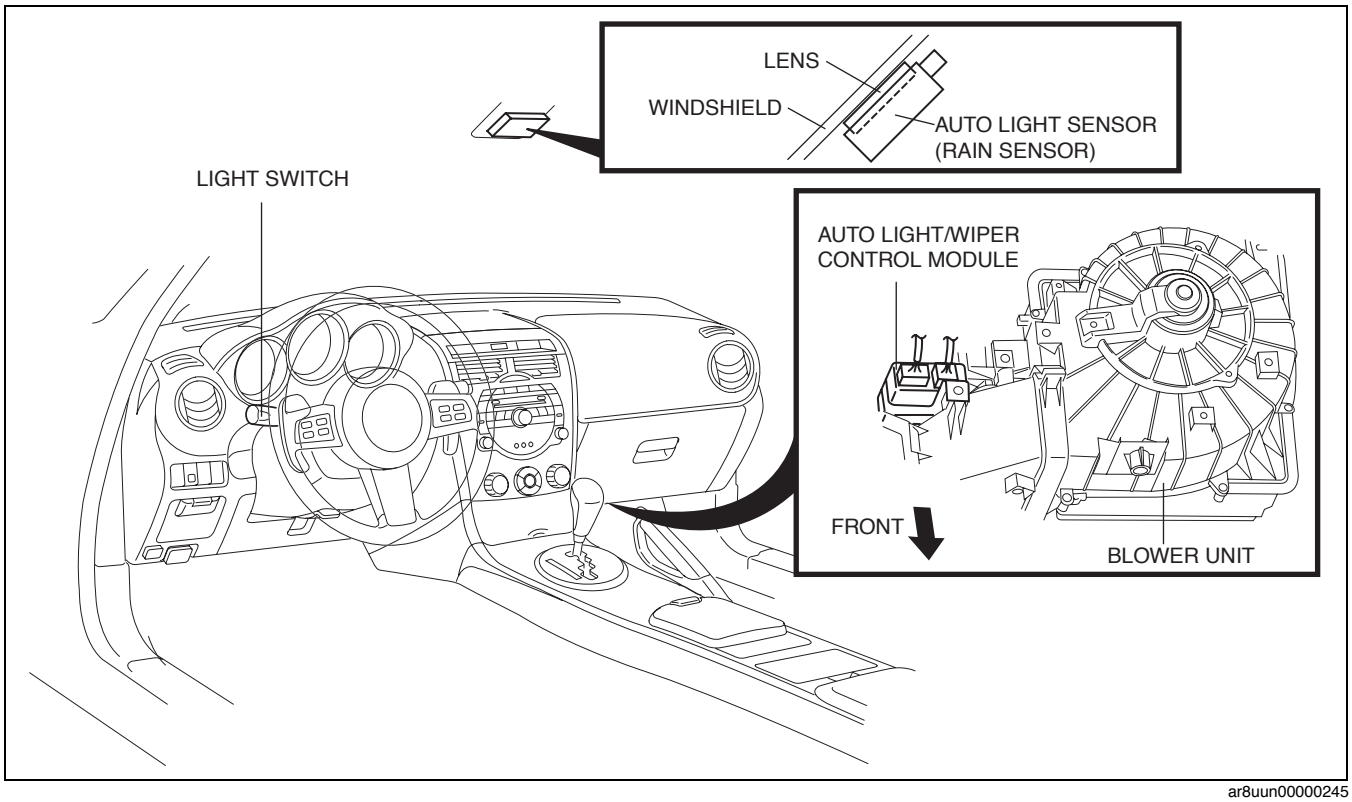

ar8uun00000245

AUTO LIGHT SYSTEM WIRING DIAGRAM

id091800102000

Vehicles With DRL

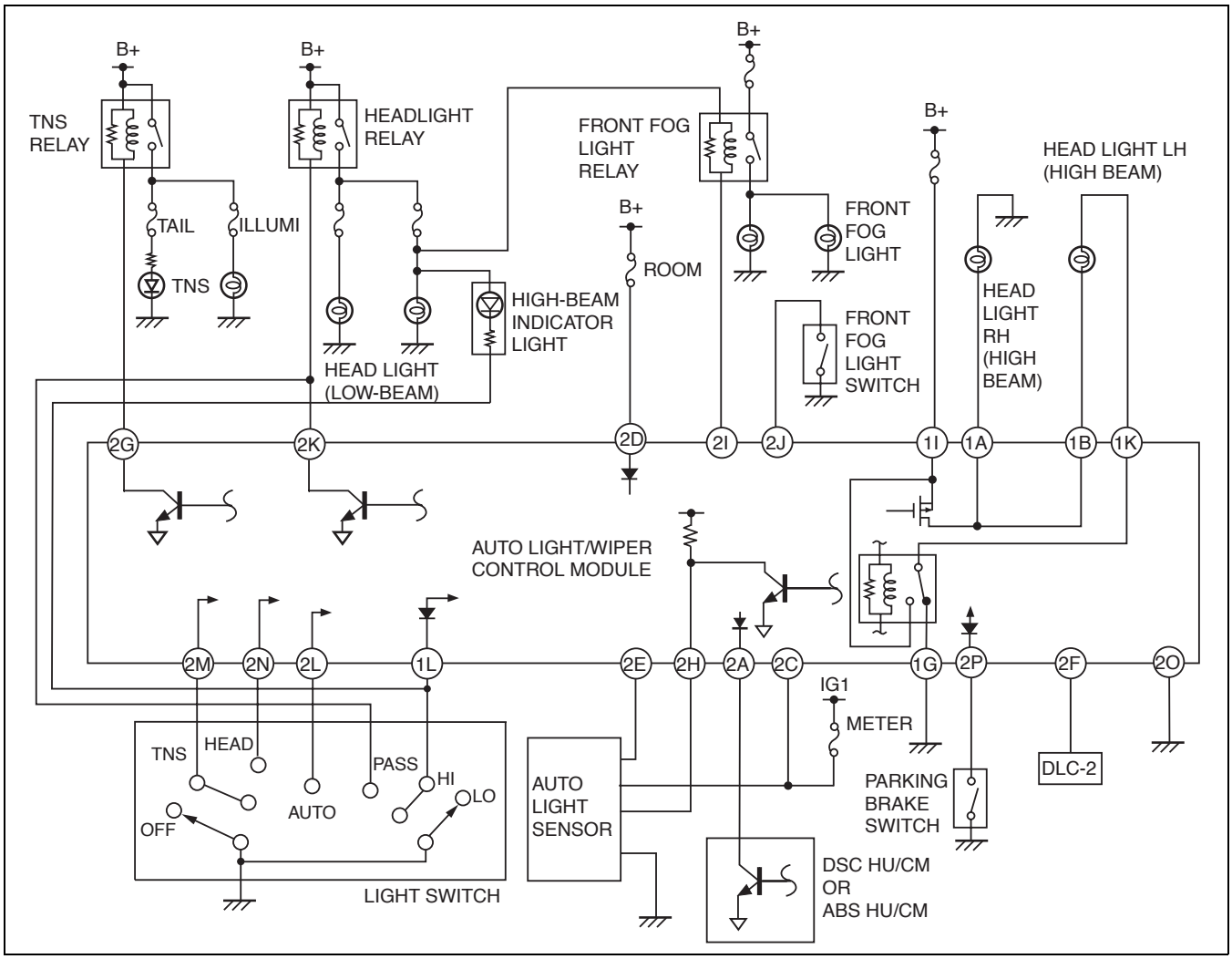

ar8uun00000257

Vehicles Without DRL

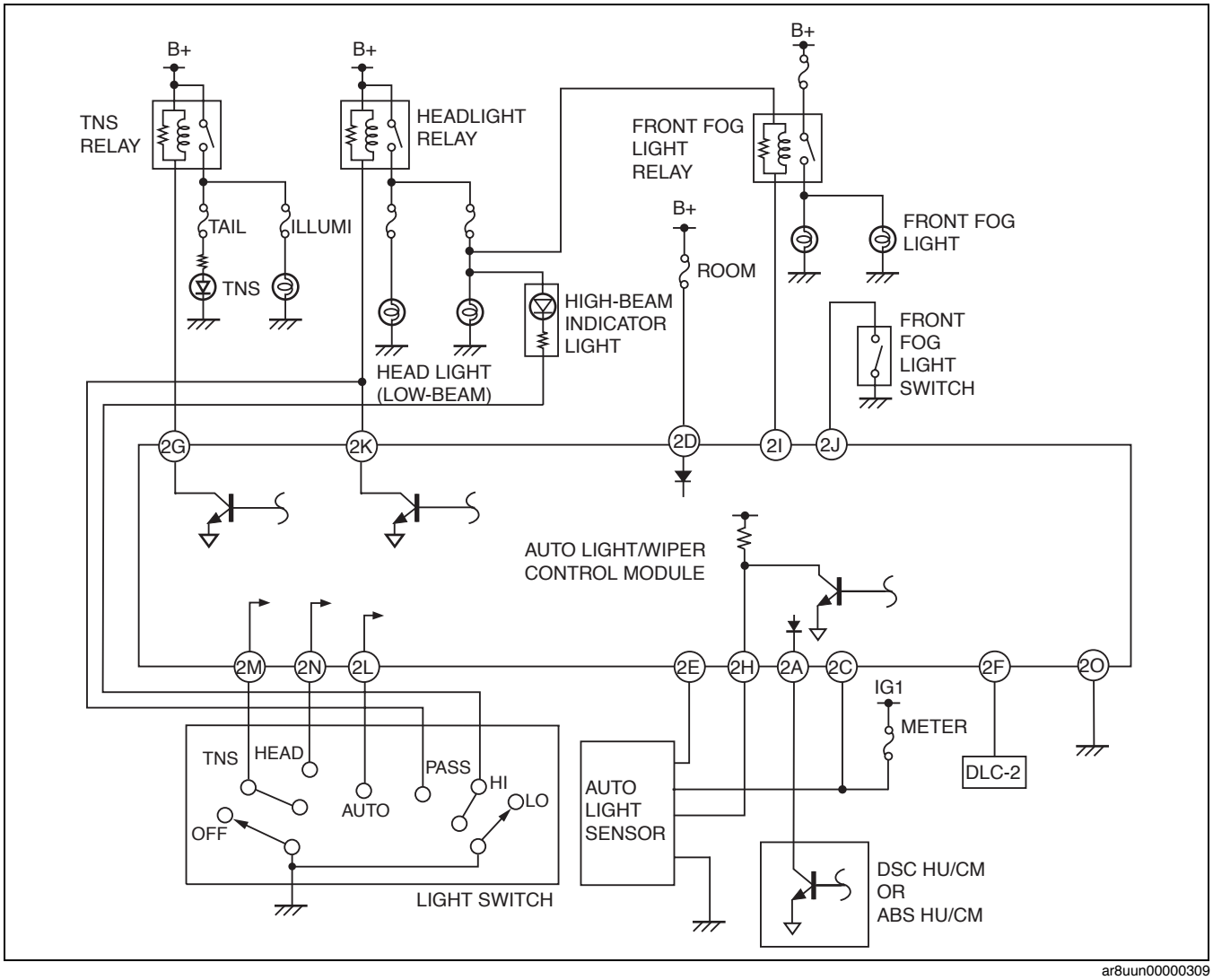

ar8uun00000309

AUTO LIGHT SYSTEM OPERATION

id091800102100

Note

- The illumination intensity which operates the auto light system is approximate and a reference. It varies depending on conditions in the surrounding area (Weather, reflection off buildings).

Operation

Illumination condition

- When the ignition switch is turned to the ON position and the light switch is in the AUTO position, the headlight and tail number side lights (TNS) illuminate under the following condition:
  — The forward and upward illumination level sensors detect **approx. 2,000 lux or less**.

Lights off condition

- When the light switch is in the AUTO position, the headlight and TNS turn off under the following conditions:
  — The forward and upward illumination level sensors detect **approx. 4,000 lux or more for approx. 1.0 s**.
  — The ignition switch is off.
  — The light switch is in the OFF position.

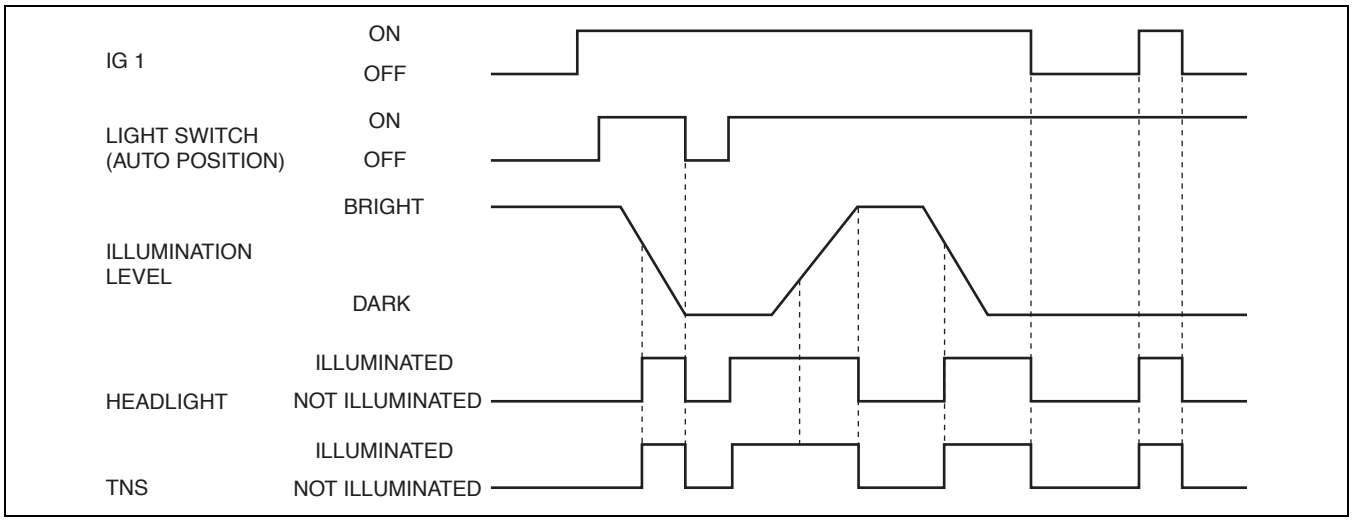

ac9uun00000531

Illumination operation

1. When the light switch is in the AUTO position the illumination sensors in the auto light sensor (installed in the windshield) detect the illumination level above and in front of the vehicle.
2. If the upward or forward illumination sensors detect **approx. 2,000 lux or less** in front of and above the vehicle, the headlight and TNS illumination control signal is sent to the auto light/wiper control module.
3. The microcomputer in the auto light/wiper control module receives the control signal and sends current (1) to transistor A, causing the transistor A to turn on.
4. When transistor A turns on, the TNS relay also turn on. At the same time, the TNS illuminate.
5. The microcomputer in the auto light/wiper control module receives the control signal and sends current (2) to transistor B, causing the transistor B to turn on.
6. When transistor B turns on, the headlight relay (LO) also turns on. At the same time, the headlights (low-beam) illuminate.

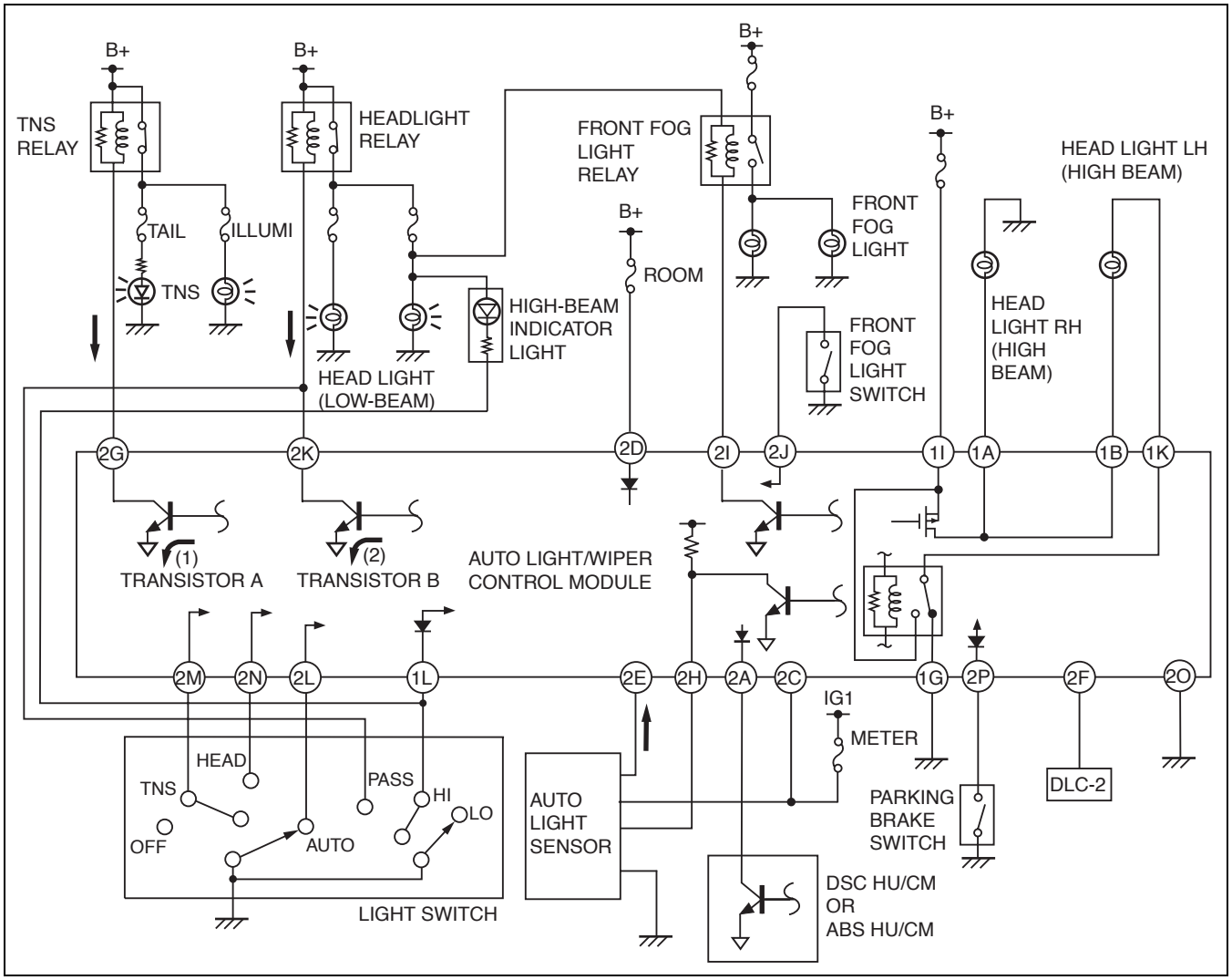

ar8uun00000258

Lights off operation

1. When the light switch is in the AUTO position the illumination level sensors in the auto light sensor (installed in the windshield) detect the illumination level above and in front of the vehicle.
2. If the upward and forward illumination level sensor detect **approx. 4,000 lux or more for 1.0 s** in front of and above the vehicle, the headlight and TNS off control signal is sent to the auto light/wiper control module.
3. The microcomputer in the auto light/wiper control module receives the control signal and turns off the current to transistor A, causing the TNS relay to also turn off.
4. When the TNS relay turns off, the TNS also turns off.
5. The microcomputer in the auto light/wiper control module receives the control signal and turns off the current to transistor B, causing the headlight relay (LO) to also turn off.
6. When the headlight relay (LO) turns off, the headlights (low-beam) also turn off.

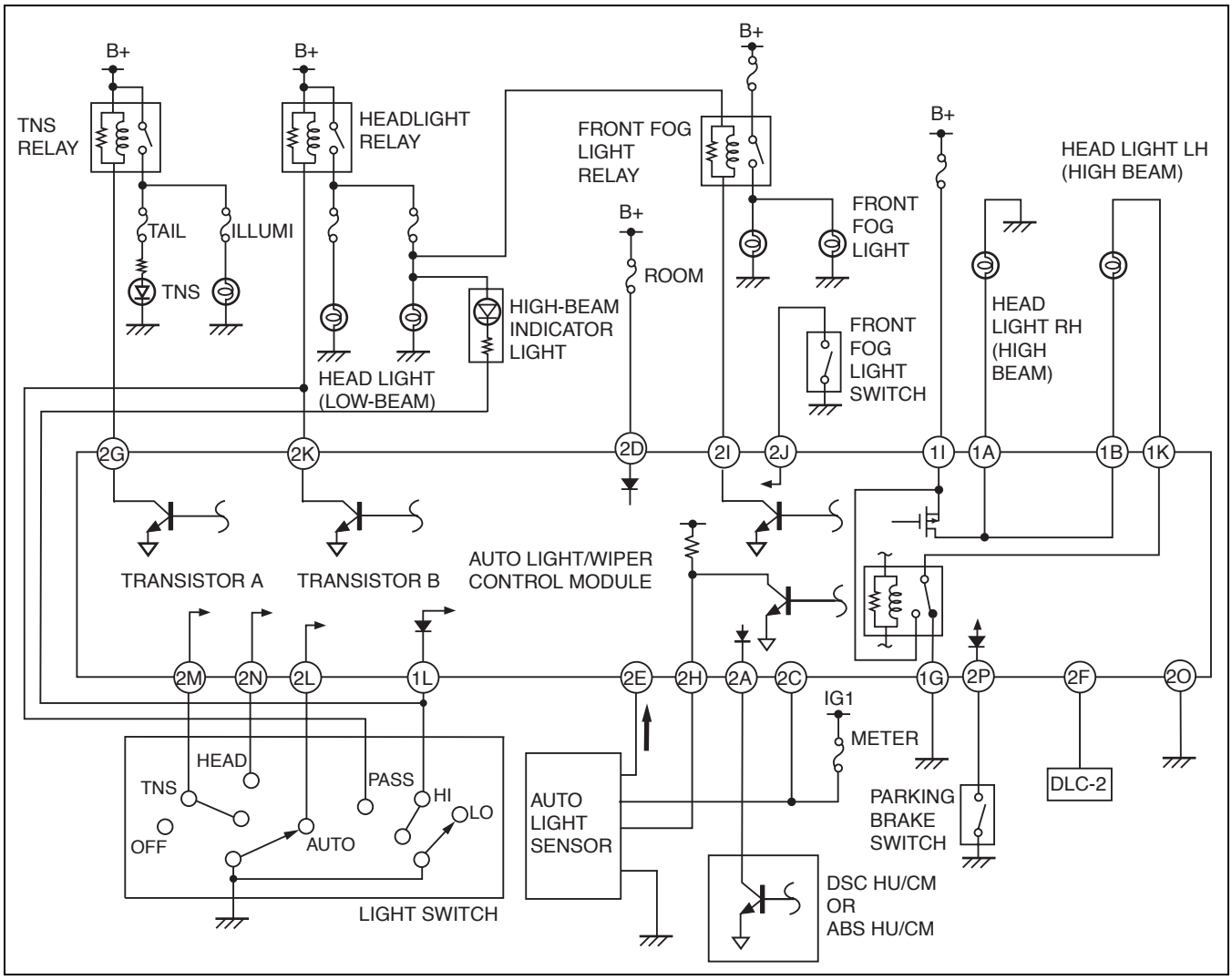

ar8uun00000259

Fail-Safe Function

- When a auto light sensor malfunction or a communication error between the auto light sensor and auto light/wiper control module is detected, the auto light/wiper control module initiates controls as indicated in the fail safe function table.

Fail-Safe Function Table

Malfunctions	Fail-safe function		Recovery items
	Before operation	After operation	
• Auto light sensor error • Auto light sensor communication error	Headlight illuminated	Maintains headlights on	• Ignition switch lock position • When a auto light sensor malfunction is cleared • When communication is restored • When the light switch is in a position other than AUTO
	TNS illuminated	Maintains TNS on	
	Off	Maintains turn-off	

AUTO LIGHT SENSOR FUNCTION

id091800102200

- The auto light sensor contains upward and forward illumination sensors which detect the level of illumination above and in front of the vehicle respectively.
- If the forward illumination level sensor detects a bright level of illumination in front of the vehicle and the upward illumination level sensor detects a dark level when the headlights are on, the microcomputer in the auto light sensor prepares for turning off the lights. If both illumination level sensors detect that is necessary to turn off the headlights, they are turned off with optimal timing.
- If the forward illumination level sensor detects a dark level of illumination in front of the vehicle and the upward illumination level sensor detects a bright level when the headlights are off, the microcomputer in the auto light sensor prepares for turning on the lights If both illumination level sensors detect that is necessary to turn on the headlights, they are turned on with optimal timing.

AUTO LIGHT SENSOR OPERATION

id091800102300

Caution

- **In the following cases, the auto light sensor cannot detect the illumination level correctly which could cause an auto light malfunction:**
  - **— A sticker or label is adhered to the windshield above the auto light sensor.**
  - **— The windshield is dirty above the auto light sensor.**

- The auto light sensor is installed to the lens which is installed to top center area of the windshield

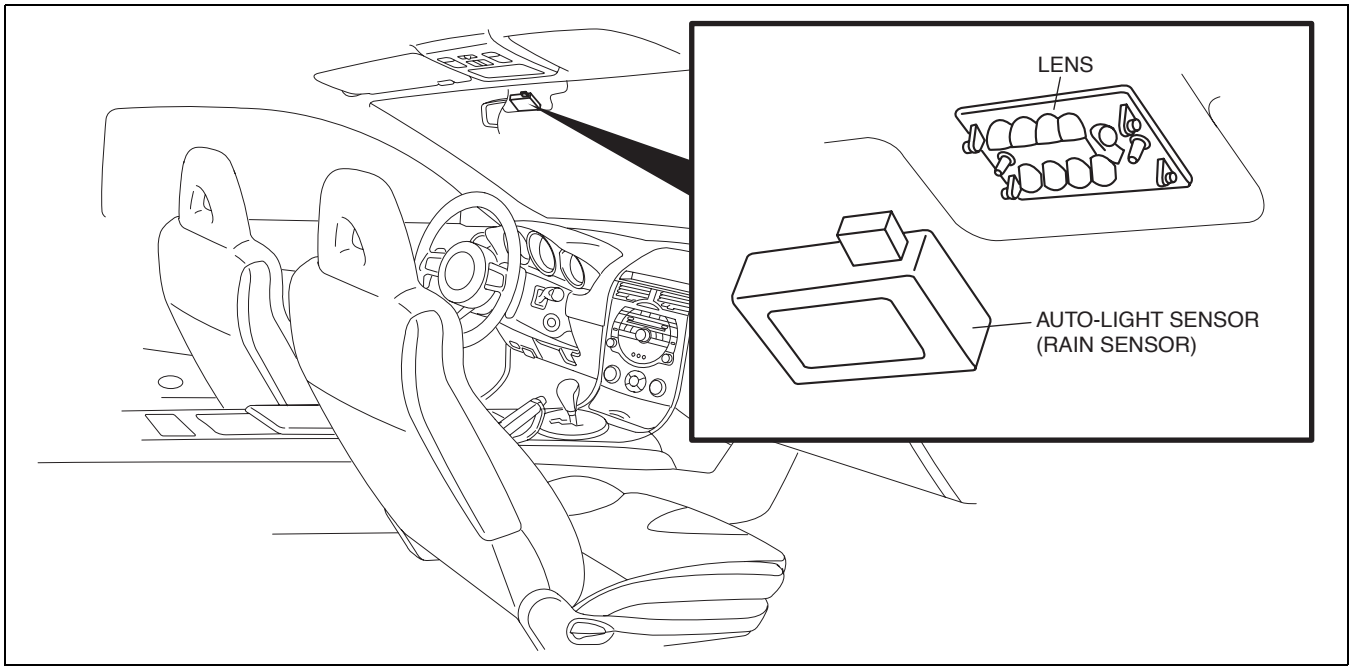

ar8uun00000260

- The auto light sensor is integrated with the rain sensor as a single unit.
- The upward and forward illumination level sensors which detect the level of illumination above and in front of the vehicle respectively are built-in.

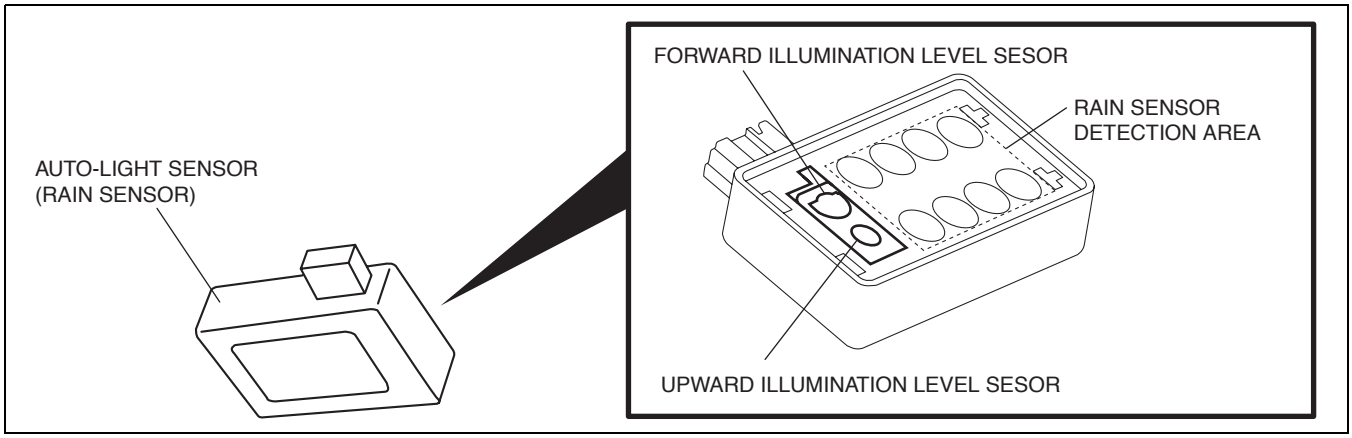

ac9uun00000591

Function Description

Illumination level adjustment function

- The illumination level sensitivity can be switched between two levels using the M-MDS.

On-board diagnostic function

- If there is any malfunction in the auto light sensor, the auto light/wiper control module is informed of the malfunction and a DTC is detected.

AUTO LIGHT-OFF SYSTEM OUTLINE

id091800105000

- The auto light/wiper control module has an auto light-off timer function.
- The auto light/wiper control module has been adopted in which the auto light, auto wiper, DRL, and auto light-off systems are consolidated.

AUTO LIGHT-OFF SYSTEM WIRING DIAGRAM

id091800106000

Auto Light/wiper Control Module
Vehicles with DRL

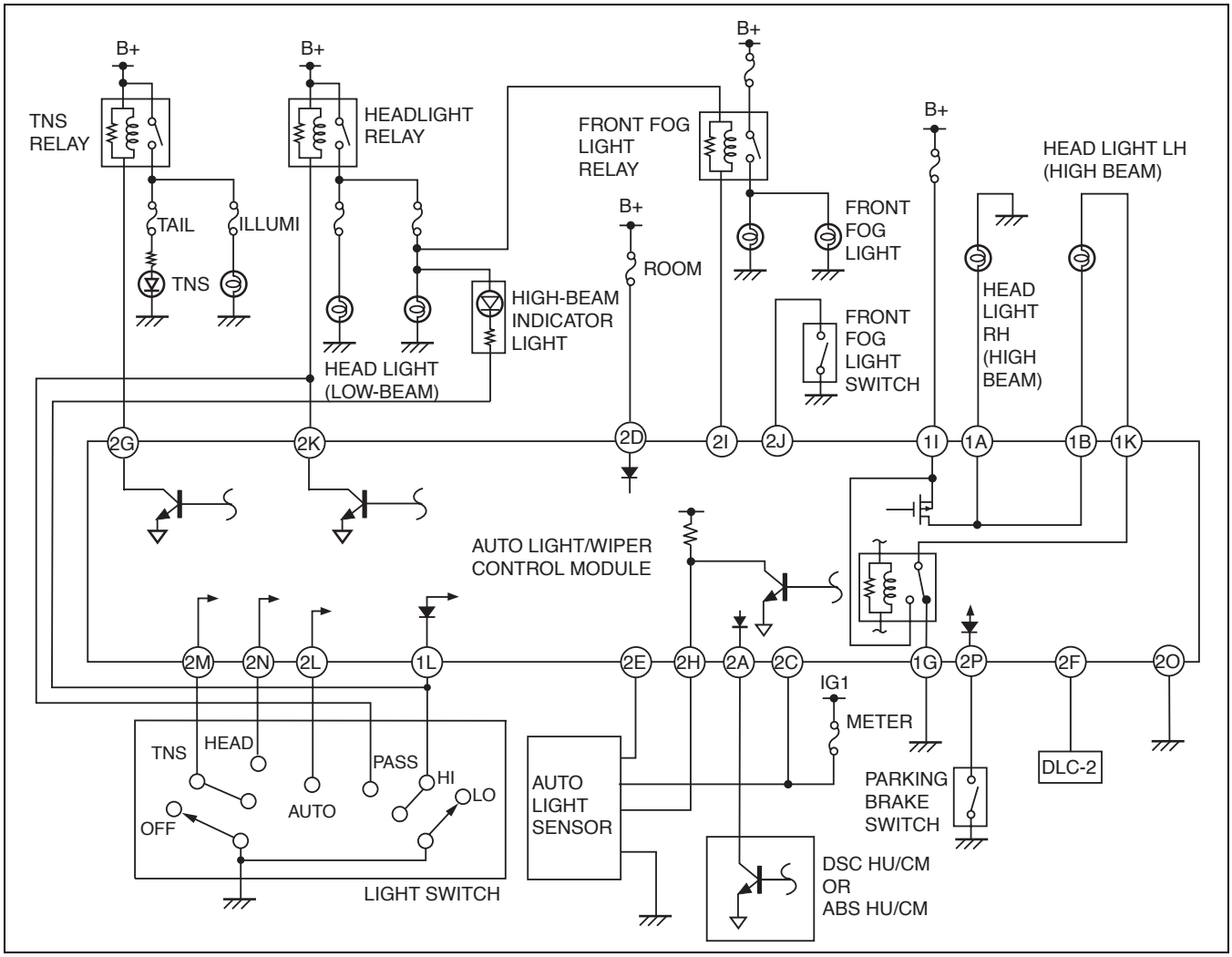

ar8uun00000257

Vehicles without DRL

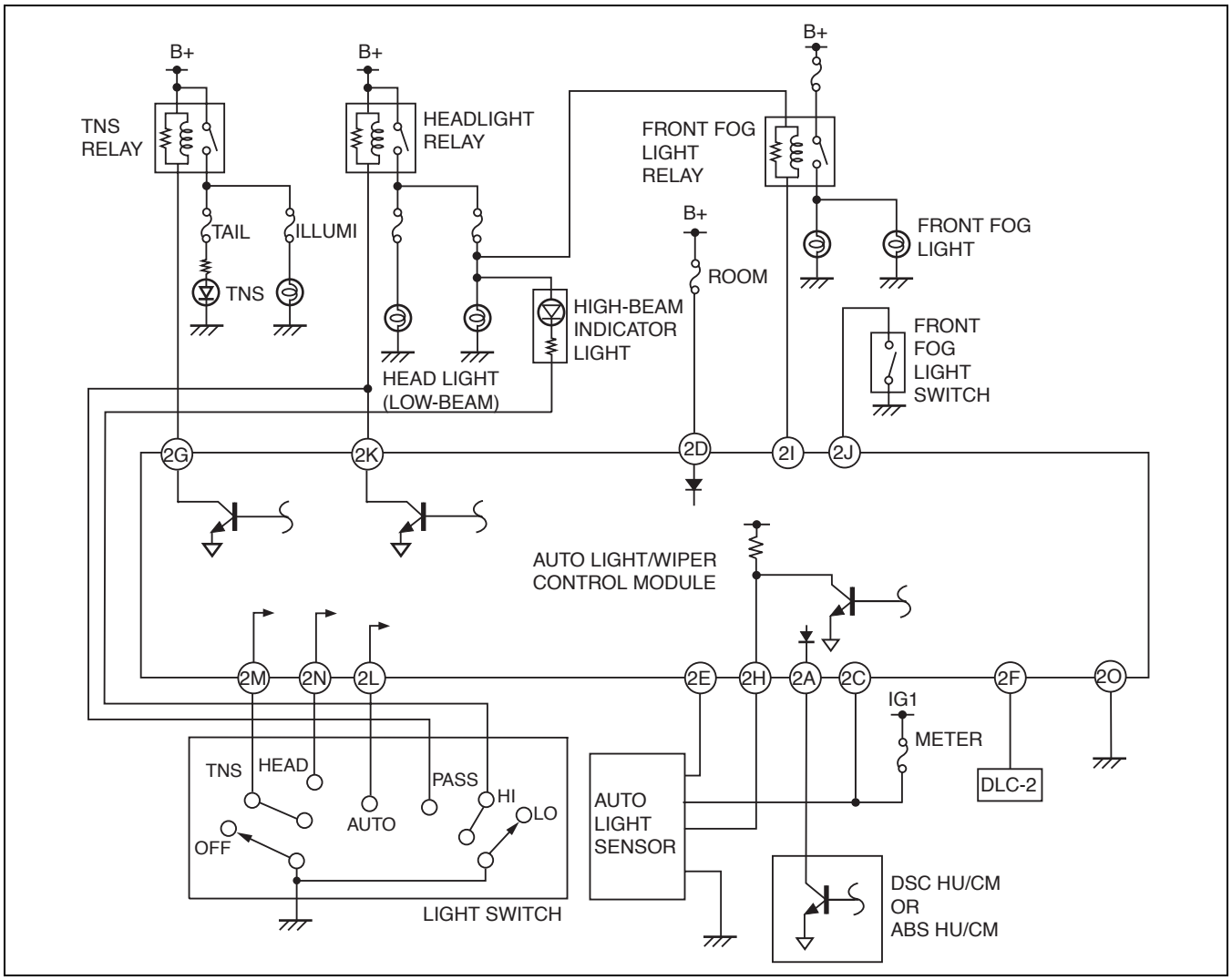

ar8uun00000309

AUTO LIGHT-OFF SYSTEM OPERATION

id091800106200

Operation

- When the following conditions are satisfied, the auto light/wiper control module turns on the lights and activates the built-in timer. When the specified time has passed, the lights go off.

Condition before operation	Operation condition	Illumination time
• Ignition switch is at ON position. • Headlight switch is at TNS or headlight position. • Headlight switch is in AUTO position and auto light system is operating. (Vehicles with auto light system)	Ignition switch is turned to LOCK or ACC position.	Approx. 30 seconds
• Ignition switch is at LOCK or ACC position.	Headlight switch is turned to TNS or headlight position.	
• Headlight switch is at TNS position and timer is operating. • Headlight switch is at AUTO position and timer is operating. (Vehicles with auto light system)	Headlight switch is turned to headlight position.	

- The timer is canceled according to the following conditions, and then the system operates as follows:

Cancel condition	Auto light-off system operation
Ignition switch is turned to ON position.	• When headlight switch is at TNS position, TNS relay turns on. • When headlight switch is at headlight position, headlight relay and TNS relay turns on.
Headlight switch is turned off.	TNS and headlight relays turn off.
Headlight switch is turned AUTO position. (Vehicles with auto light system)	TNS and headlight relays turn off.

- The lights turn on when the ignition switch is at the ON position and the headlight switch is at the TNS or headlight position, even if the auto light/wiper control module is malfunctioning.

Timing Chart

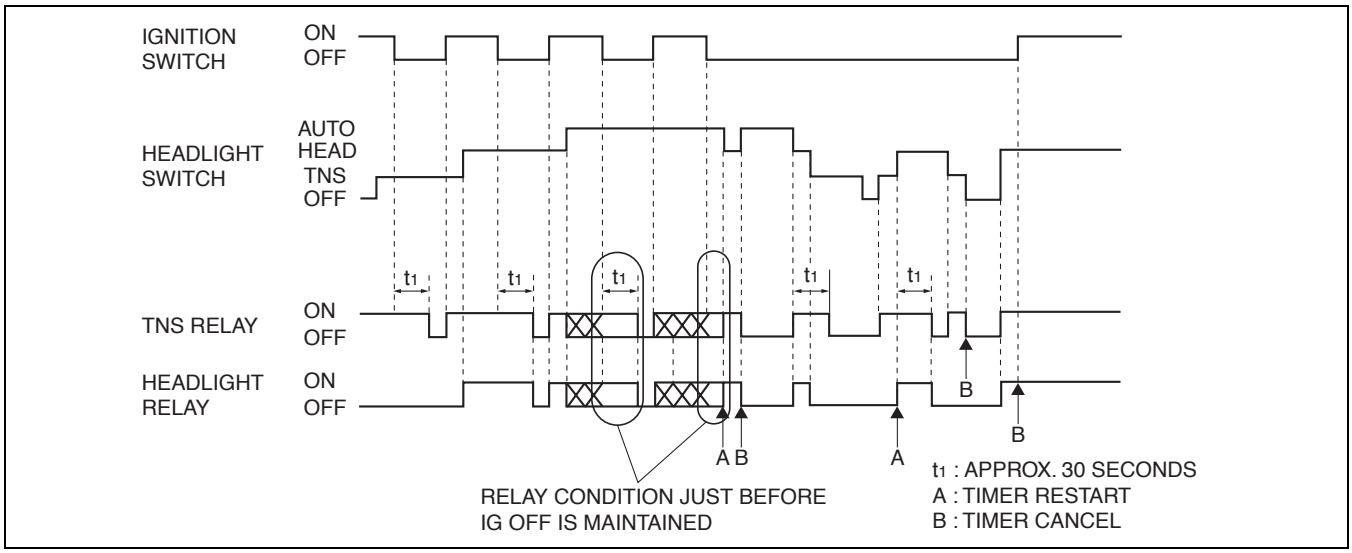

ac9uun00000264

DRL (DAYTIME RUNNING LIGHT) SYSTEM OUTLINE

id091800106100

- The DRL system automatically operates the high-beam headlights when the ignition switch is turned to the ON position and the parking brake is released.
- An auto light/wiper control module has been adopted in which the auto light, auto wiper, DRL, and auto light-off systems are consolidated.

DRL (DAYTIME RUNNING LIGHT) SYSTEM WIRING DIAGRAM

id091800109500

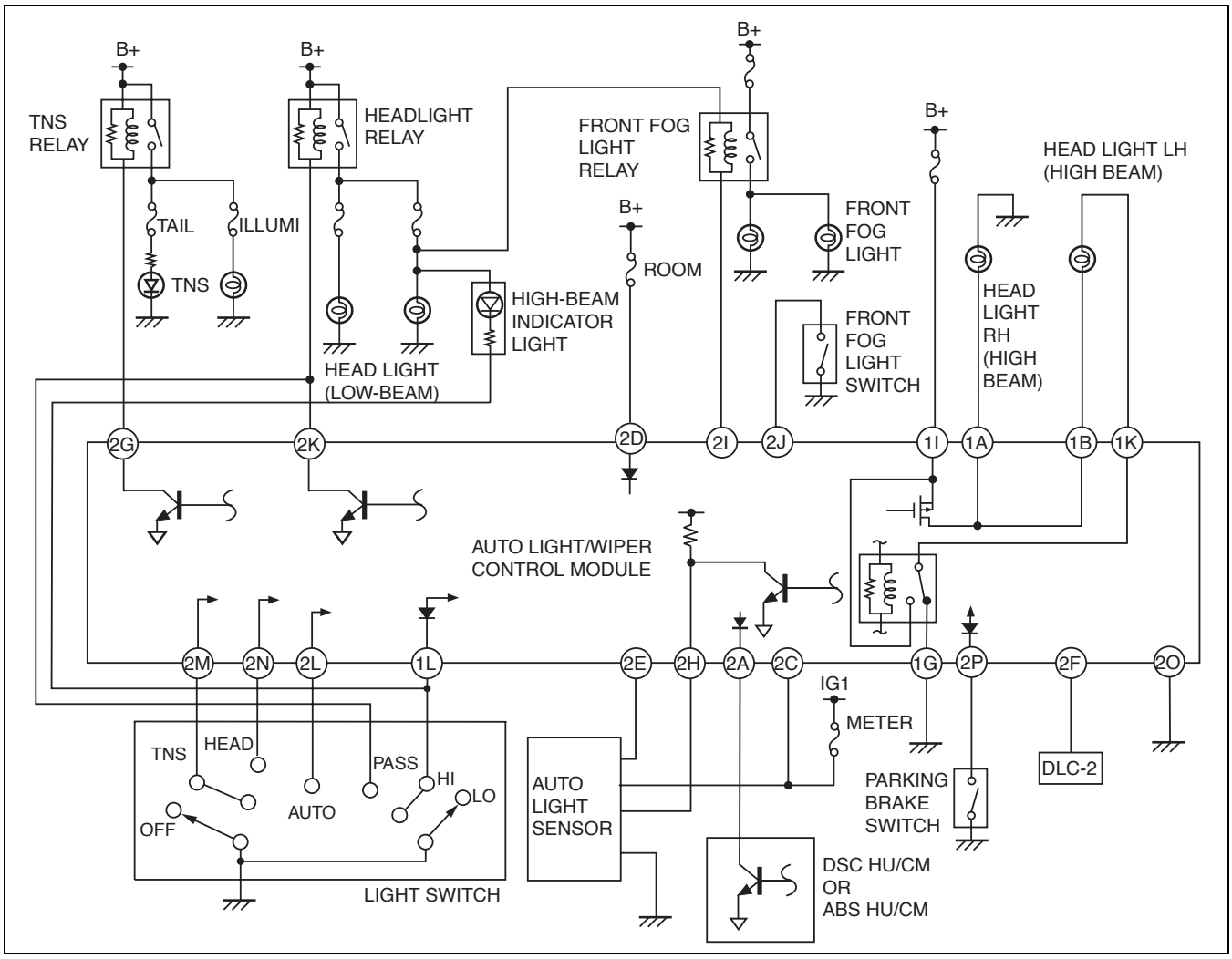

ar8uun00000257

DRL (DAYTIME RUNNING LIGHT) SYSTEM OPERATION

id091800109600

Operation Condition

Operation condition (Input signal)				Operation condition of illumination (Output signal)		
Ignition switch	**Parking brake switch**	**Light switch**	**Flash-to-pass switch**	**Low-beam headlight**	**High-beam headlight**	**Front fog light**
ON	OFF	OFF/ TNS	OFF	-	Illuminates (DRL)	-
				-	Illuminates (DRL)	-
	ON			-	-	-
				-	-	-
	-	Headlight (LO)		Illuminates	-	Illuminates
		Headlight (HI)		Illuminates	Illuminates	-
-	-	-	ON	Illuminates	Illuminates	-

Illumination Operation

1. When the DRL operation conditions are met, the current flows and the DRL relay turns on.
2. When the DRL relay turns on, the current flows to the headlight high beam (LH) and then to the headlight high beam (RH) to turn on the headlight high beams at 50 % dim.

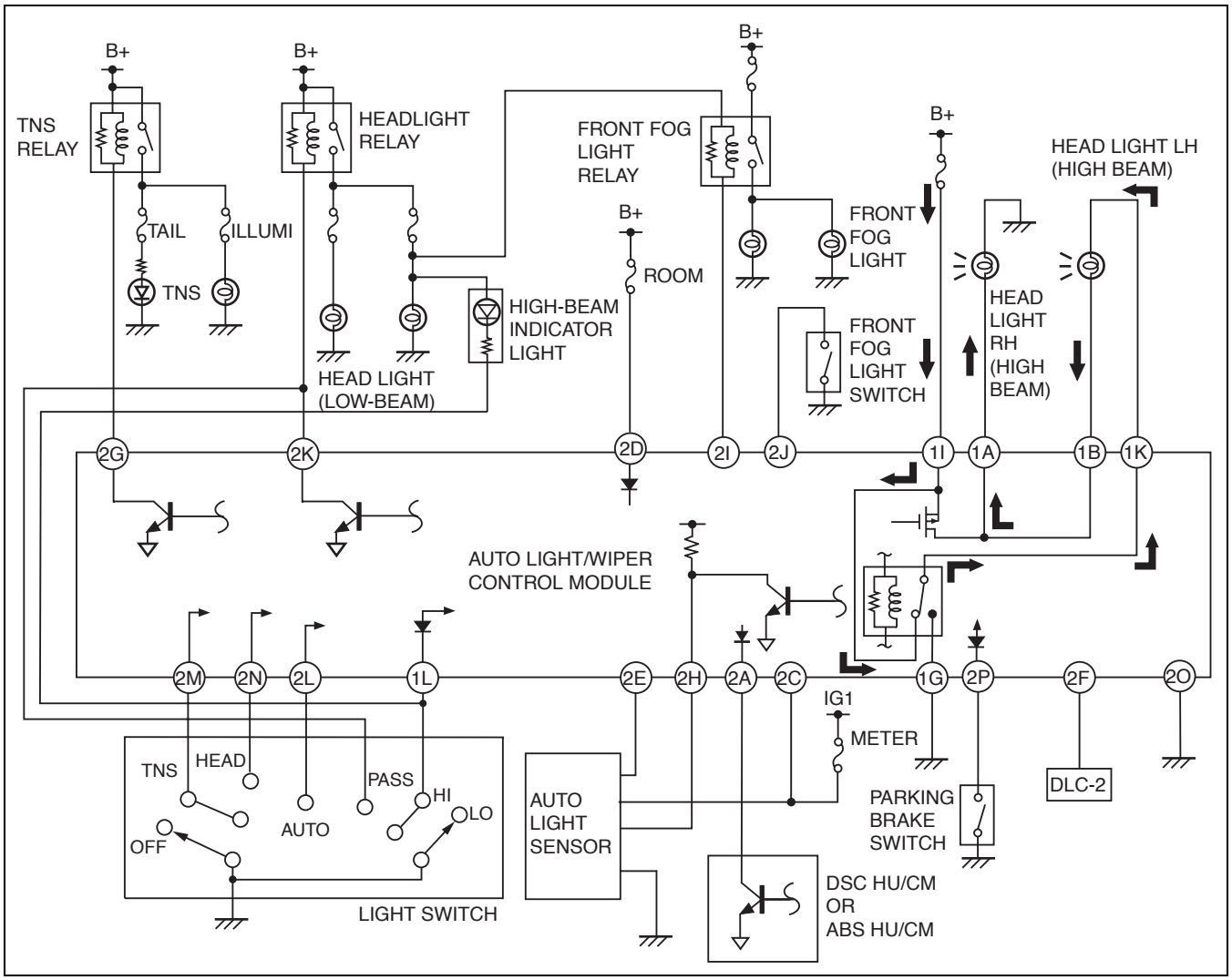

ar8uun00000290

FRONT SIDE TURN LIGHT CONSTRUCTION

id091800107000

- Built-in front side turn light has been adopted for front fender panel.
- The front side turn light and front side turn light bulb are of an integrated construction.

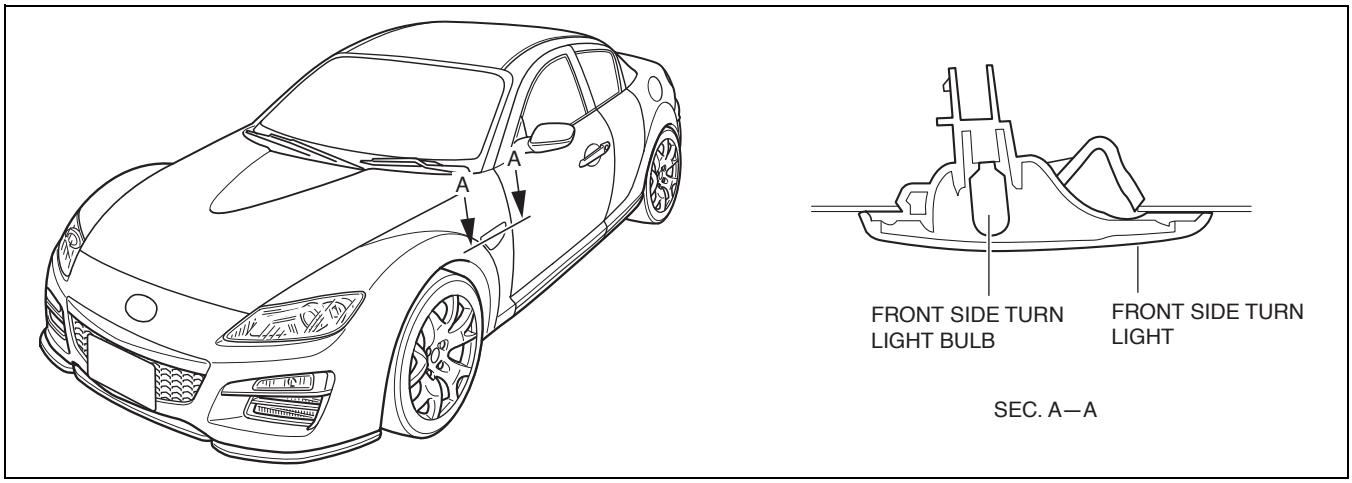

ar8uun00000246

REAR COMBINATION LIGHT CONSTRUCTION

id091800100800

- LEDs have been adopted for the stop/taillights, resulting in a reduction of energy consumption.
- Rear side marker lights for the rear combination lights have been adopted to improve marketability.

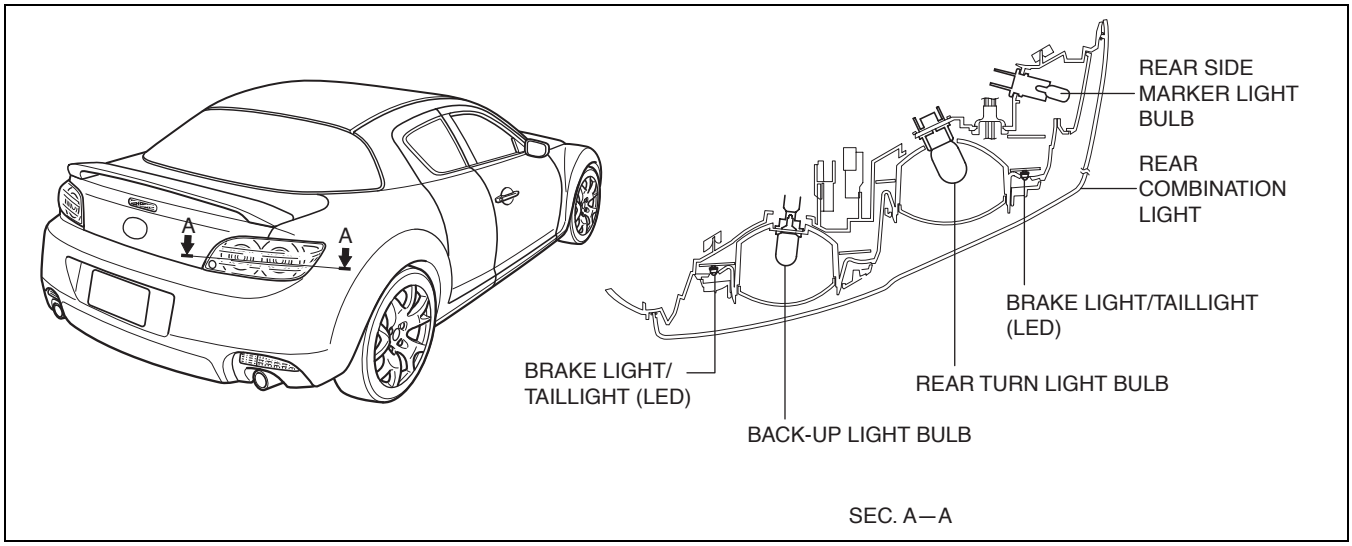

ar8uun00000248

09-19 WIPER/WASHER SYSTEM

WIPER/WASHER SYSTEM OUTLINE 09-19–1
AUTO WIPER SYSTEM OUTLINE 09-19–1
AUTO WIPER SYSTEM STRUCTURAL VIEW 09-19–1
AUTO WIPER SYSTEM WIRING DIAGRAM 09-19–2
AUTO WIPER SYSTEM OPERATION 09-19–3
Intermittent Operation **09-19–3**
RAIN SENSOR FUNCTION 09-19–4
Rainfall detection function **09-19–4**
Sensitivity Adjustment Function **09-19–4**
Initial Setting Function **09-19–4**
On-board Diagnostic Function **09-19–4**
Fail-Safe Function **09-19–4**
RAIN SENSOR CONSTRUCTION/OPERATION 09-19–4
Operation With No Rainfall Contacting Windshield **09-19–5**
Operation With Rainfall Contacting Windshield **09-19–6**

WIPER/WASHER SYSTEM OUTLINE

id091900102500

- Auto wiper system adopted which enables fully automatic windshield wiper operation.

AUTO WIPER SYSTEM OUTLINE

id091900101000

- An auto wiper system that detects rainfall on the windshield and automatically controls all operation (stop, interval, low, and high) has been adopted, removing the burden of operating switches from the driver.

AUTO WIPER SYSTEM STRUCTURAL VIEW

id091900101100

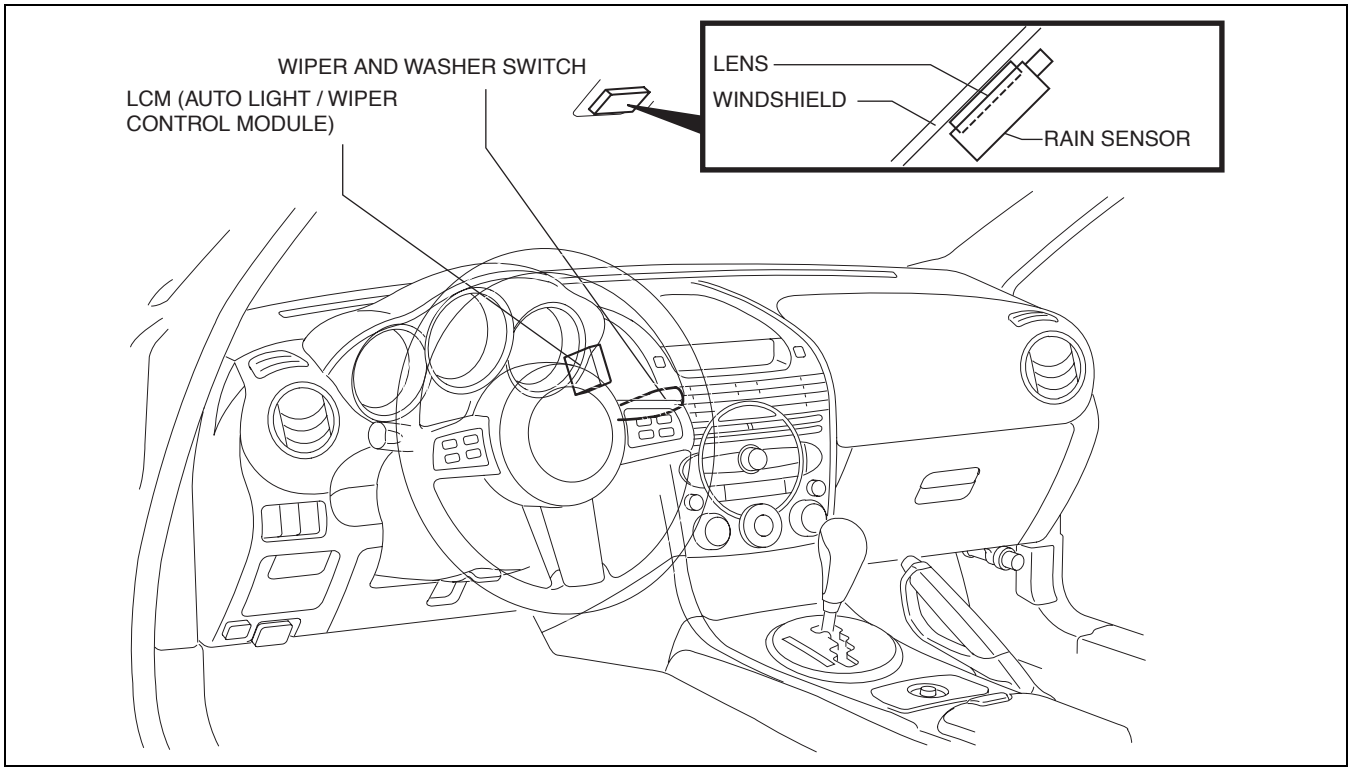

ar8uun00000241

AUTO WIPER SYSTEM WIRING DIAGRAM

id091900101200

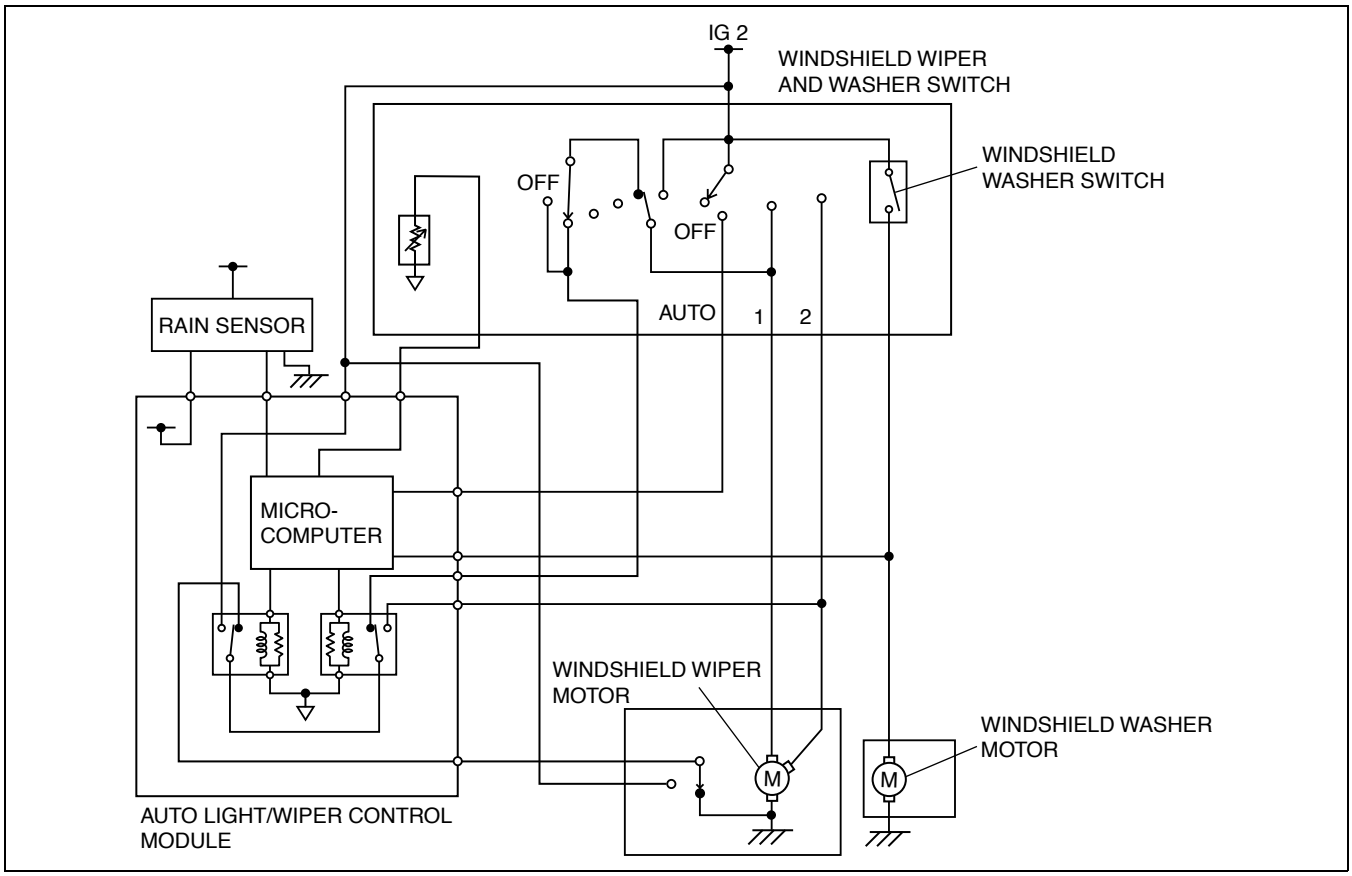

ar8uun00000366

AUTO WIPER SYSTEM OPERATION

id091900101300

1. The rain sensor installed in the windshield detects rainfall amount when the wiper and washer switch is turned to the AUTO position.
2. The detected rainfall amount is converted to an electronic signal and transmitted to the auto light/wiper control module as a windshield wiper operation control signal.
3. When the microcomputer in the auto light/wiper control module receives the control signal, current (1) flows to the transistor and the transistor is turned on.
4. When the transistor turns on, the windshield wiper relay turns on.
5. When the windshield wiper relay turns on, the current flows to the windshield wiper motor, and the wiper operates at low speed.

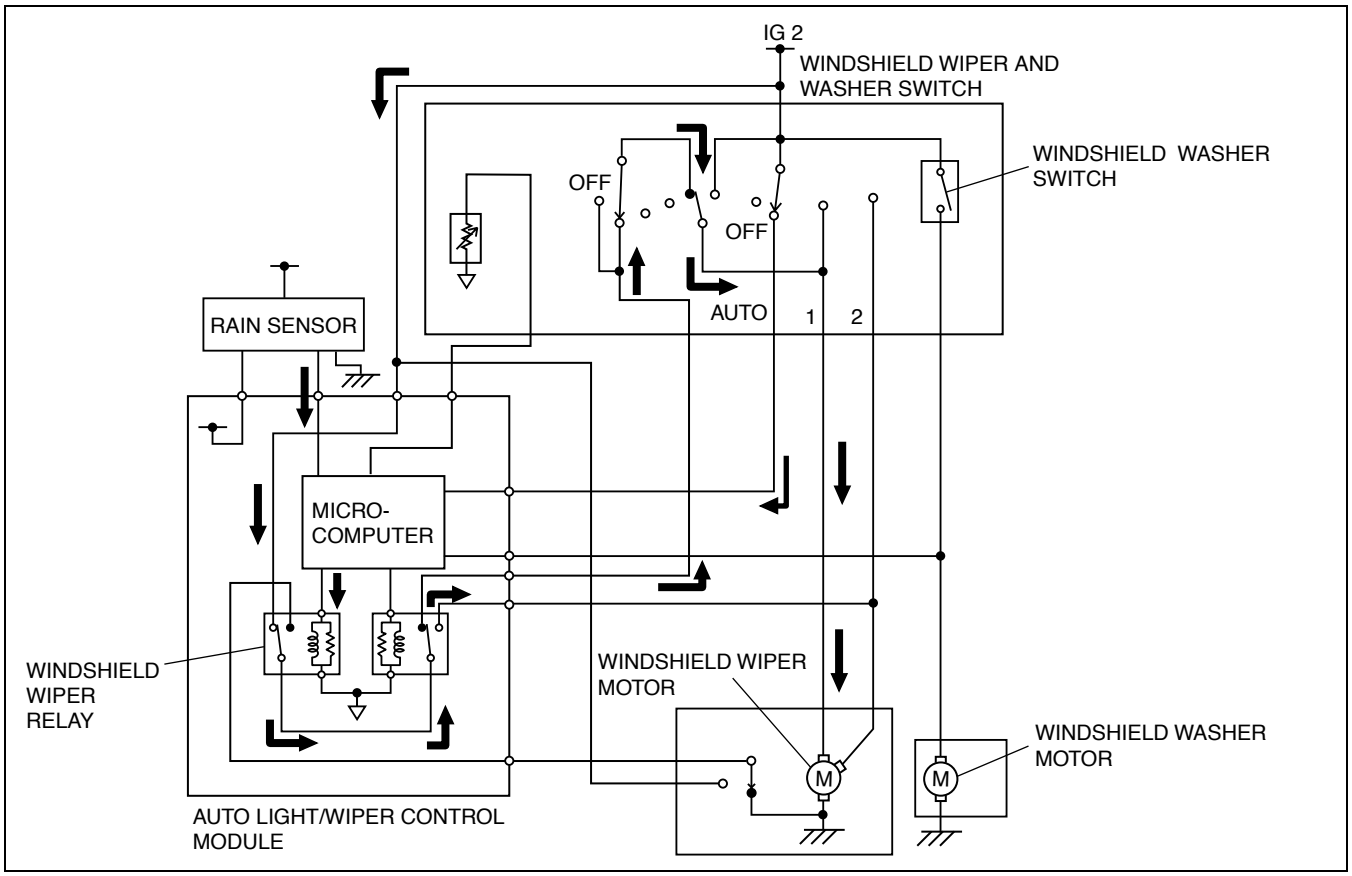

ar8uun00000368

Intermittent Operation

- If the windshield wipers are stopped and the rain sensor detects a specified amount of rainfall, the wipers are operated at low speed. The interval timing is adjusted according to the amount of rainfall detected.

Low Speed Operation

- If the windshield wipers are operating intermittently and the rain sensor detects an amount of rainfall specifc to wiper operation greater than low speed, but less than high speed, the wipers are operated continuously at low speed.

High Speed Operation

- If the windshield wipers are operating at low speed or stopped and the rain sensor detects an amount of rainfall specific to high speed operation or greater, the wipers are operated two times at high speed. If the rain sensor receives a signal for high speed operation after the wipers are operated at high speed twice, the high speed operation is continued.

RAIN SENSOR FUNCTION

id091900101400

Rainfall detection function

- The LED in the rain sensor emits infrared light which is reflected off the windshield via the lens sensor and then received by the photodiode in the rain sensor. If the rate of reflected infrared light is reduced, it is determined that rain is contacting the windshield and the intensity of the rainfall is calculated from the amount of reflection rate reduction.

Sensitivity Adjustment Function

- By changing the sensitivity adjustment volume, installed on the wiper and washer switch, the sensitivity of the rain sensor can be freely adjusted.

Initial Setting Function

- When the ignition switch is turned to the ON position after replacing the rain sensor with a new one, the initial setting is stored after verifying the windshield condition.
- The initial setting of the rain sensor can be performed using the specified procedure.
  — Refer to the Workshop Manual for the initial setting procedure.

On-board Diagnostic Function

- If there is any malfunction in the rain sensor, the rain sensor notifies the auto light/wiper control module of the malfunction and a DTC from the auto light/wiper control module is detected.
- If there is a communication error between the rain sensor and auto light/wiper control module, the rain sensor notifies the auto light/wiper control module of the error and a DTC from the auto light/wiper control module is detected.

Fail-Safe Function

- If the rain sensor detects rainfall and then detects no change in the detected amount after the wipers have been operated two times, the windshield is determined to be dirty and windshield wiper operation is stopped.
  — If the windshield is dirty, turn the wiper and washer switch to the 1 or 2 position to operate the windshield wipers. Or, remove dirt from the windshield before operating the auto wiper.
- When the temperature sensor inside the rain sensor detects **approx. -10 °C {50 °F}or less** when the vehicle speed is **0 km/h**, the windshield wipers do not operate.

RAIN SENSOR CONSTRUCTION/OPERATION

id091900101500

Warning

- **If vehicle servicing such as car washing is performed with the ignition switch turned to the ON position, and the wiper and washer switch is in the AUTO position, the windshield wipers may operate automatically. Always turn the ignition switch, and the wiper and washer switch off before performing servicing such as the car washing; otherwise a pinched hand or fingers could result in injury or a wiper system malfunction.**

Caution

- **In the following cases, the rain sensor cannot detect the rainfall amount correctly which could cause a windshield wiper malfunction:**
  — A sticker or label is adhered to the windshield above the rain sensor.
  — The windshield is dirty above the rain sensor.

- The rain sensor is installed to the lens which is installed to top center area of the windshield.

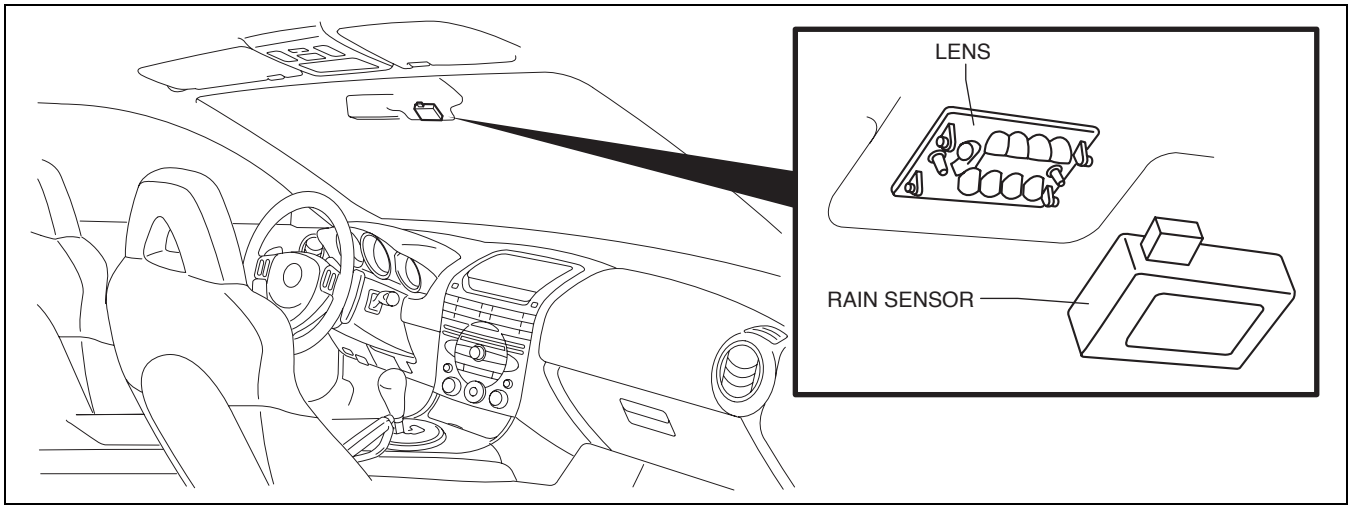

ar8uun00000242

- The rain sensor is integrated with the auto-ight sensor as a single unit.

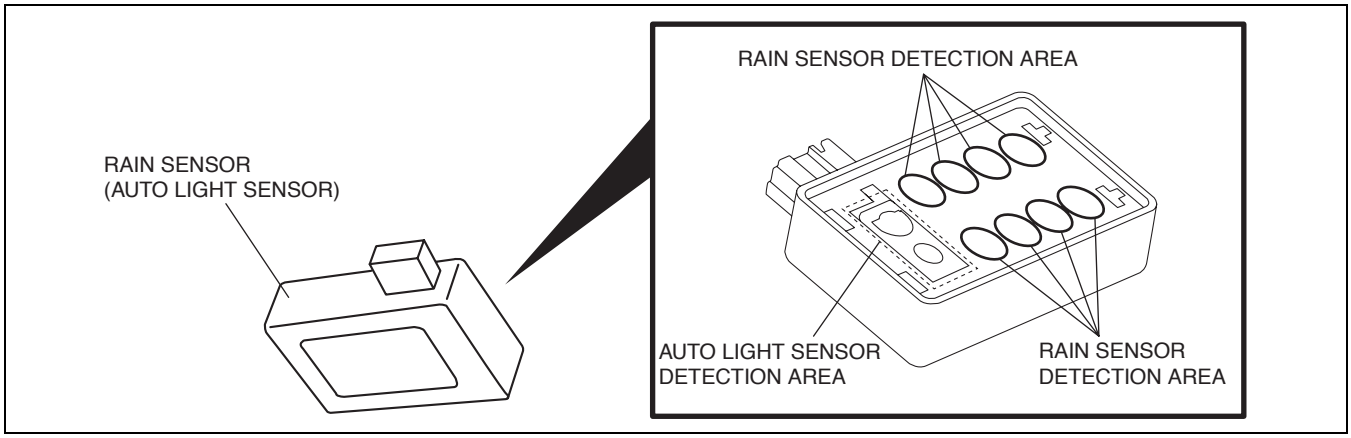

am8rrn00000599

Operation With No Rainfall Contacting Windshield

1. Infrared light is emitted from the LED in the rain sensor towards the windshield.
2. The emitted infrared light passes through the lens and is reflected off the windshield.
3. The infrared light reflected off the windshield is received by the photodiode in the lens.
4. The photodiode receives the light, the microcomputer in the rain sensor calculates the rainfall amount from the reflection rate, converts this to an electric signal and sends a windshield wiper control signal to the auto light/ wiper control module.

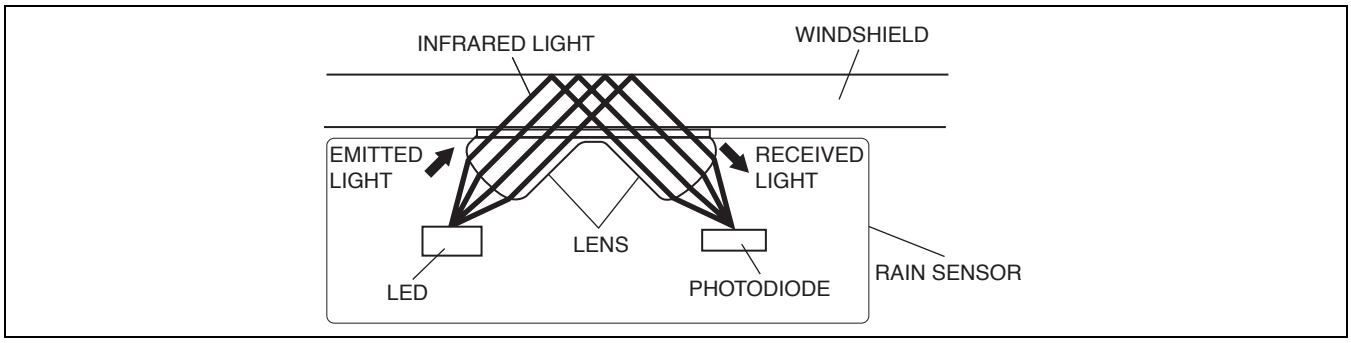

am8rrn00000597

Operation With Rainfall Contacting Windshield

1. Infrared light is emitted from the LED in the rain sensor towards the windshield.
2. Emitted infrared light passing through the lens is received by the windshield and diffused by the rainfall contacting the windshield.
3. The infrared light that is not diffused is reflected by the windshield and received by the photodiode in the lens.
4. The photodiode receives the light, the microcomputer in the rain sensor calculates the rainfall amount from the reflection rate, converts this to an electric signal and sends a windshield wiper control signal to the auto light/ wiper control module.

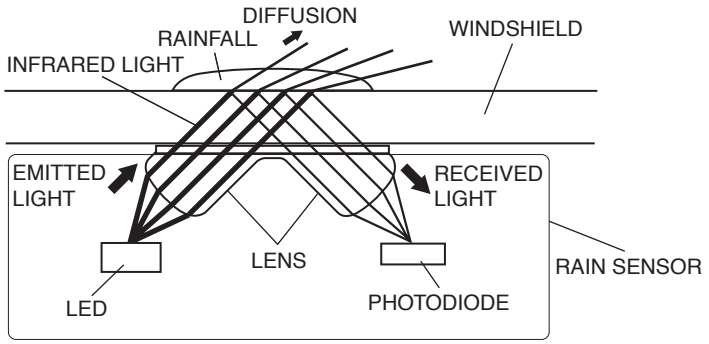

am8rrn00000598

09-20 ENTERTAINMENT

ENTERTAINMENT OUTLINE 09-20–1
AUDIO SYSTEM OUTLINE 09-20–2
AUDIO SYSTEM SPECIFICATIONS 09-20–2
Audio Unit. 09-20–2
AUDIO SYSTEM STRUCTURAL VIEW 09-20–3
AUDIO SYSTEM BLOCK DIAGRAM . . . 09-20–4
CENTER PANEL UNIT OUTLINE 09-20–4
CENTER PANEL UNIT CONSTRUCTION/ OPERATION 09-20–5
With Audio System. 09-20–5
With Car-navigation System. 09-20–6
AUDIO UNIT OUTLINE 09-20–7
AUDIO UNIT CONSTRUCTION 09-20–7
Structural view 09-20–7
Terminal Layout and Signal 09-20–8
AUTO LEVEL CONTROL (ALC) FUNCTION 09-20–9
AUTO LEVEL CONTROL (ALC) OPERATION 09-20–9
With Audio Unit 09-20–9
With Car-navigation Unit 09-20–10
ON-BOARD DIAGNOSTIC SYSTEM FUNCTION [AUDIO SYSTEM] 09-20–11
Self-diagnostic Function. 09-20–11
Diagnostic Assist Function. 09-20–12
ON-BOARD DIAGNOSTIC SYSTEM FUNCTION [HANDS-FREE TELEPHONE (HF/TEL) SYSTEM] 09-20–14
Self-diagnostic Function. 09-20–14
Diagnostic Assist Function. 09-20–16
ON-BOARD DIAGNOSTIC SYSTEM FUNCTION [CAR-NAVIGATION SYSTEM] 09-20–17
Self-diagnostic Function. 09-20–17
Diagnostic Assist Function. 09-20–18
Diagnostic check 09-20–19
AUDIO AMPLIFIER CONSTRUCTION 09-20–20
Structural view 09-20–20
Terminal Layout and Signal 09-20–20
SIRIUS SATELLITE RADIO UNIT CONSTRUCTION 09-20–22
Structural view 09-20–22
Terminal Layout and Signal 09-20–22
ANTENNA CONSTRUCTION. 09-20–23
SIRIUS Satellite Radio Antenna 09-20–23
Glass Antenna (for FM/AM). 09-20–23
AUDIO CONTROL SWITCH OUTLINE 09-20–23
AUDIO CONTROL SWITCH CONSTRUCTION/OPERATION 09-20–24
Construction 09-20–24
Operation 09-20–24
CAR-NAVIGATION SYSTEM OUTLINE 09-20–25
CAR-NAVIGATION SYSTEM SPECIFICATIONS 09-20–25
Car-navigation Unit 09-20–25
CAR-NAVIGATION SYSTEM STRUCTURAL VIEW 09-20–25
CAR-NAVIGATION SYSTEM BLOCK DIAGRAM 09-20–26
NAVIGATION FUNCTION. 09-20–26
Outline. 09-20–26
Map Screen Selection. 09-20–27
Destination Setting Function 09-20–29
Voice Recognition Function. 09-20–29
CAR-NAVIGATION UNIT OUTLINE 09-20–30
CAR-NAVIGATION UNIT CONSTRUCTION 09-20–30
Structural view. 09-20–30
Terminal Layout and Signal. 09-20–31
MICROPHONE CONSTRUCTION/ OPERATION 09-20–32
Terminal Layout and Signals 09-20–32
AUXILIARY JACK FUNCTION 09-20–32
AUXILIARY JACK CONSTRUCTION/ OPERATION 09-20–32
HANDS-FREE TELEPHONE (HF/TEL) SYSTEM OUTLINE. 09-20–33
HANDS-FREE TELEPHONE (HF/TEL) SYSTEM STRUCTURAL VIEW 09-20–33
Component part and Function 09-20–33
HANDS-FREE TELEPHONE (HF/TEL) SYSTEM BLOCK DIAGRAM 09-20–34
HANDS-FREE TELEPHONE (HF/TEL) SYSTEM CONSTRUCTION 09-20–35
Structural view. 09-20–35
Terminal Layout and Signal. 09-20–35
HANDS-FREE TELEPHONE (HF/TEL) SYSTEM FUNCTION 09-20–36

ENTERTAINMENT OUTLINE

id092000100100

Improved marketability	• A unit with a built-in AM/FM tuner and CD player or CD changer or MP3 applicable CD changer unit has been adopted for the audio unit. • A unit with a built-in DVD-ROM drive and MP3 applicable CD changer has been adopted for the car navigation unit. • An HF/TEL system in which mobile telephones can be used while driving has been adopted. (With HF/TEL system) • A SIRIUS satellite radio antenna which can receive SIRIUS satellite radio has been adopted. (With SIRIUS satellite radio system)
Improved convenience	• Audio control switches have been adopted to the left spoke of the steering wheel. • Auxiliary jack adopted which can connect to commercially available portable audio, and output sound from speakers via audio unit.

AUDIO SYSTEM OUTLINE

id092000111000

- Three types of audio units, TYPE A (AM/FM tuner/CD player-integrated) and TYPE B (AM/FM tuner/CD changer-integrated) and TYPE C (AM/FM tuner/MP3 applicable CD changer-integrated), are provided.
- Steering switches on the left spoke of the steering wheel have been adopted.
- An HF/TEL system in which mobile telephones can be used while driving has been adopted. (With HF/TEL system)
- A SIRIUS satellite radio antenna which can receive SIRIUS satellite radio has been adopted. (With SIRIUS satellite radio system)
- Auxiliary jack adopted which can connect to commercially available portable audio, and output sound from speakers via audio unit.

AUDIO SYSTEM SPECIFICATIONS

id092000100400

Audio Unit

Item			Specification
Rated voltage		(V)	12
Frequency range	AM	(kHz)	530—1710
	FM	(MHz)	87.75—107.90
Maximum output power		(W)	With Bose®: 296 (External type audio amplifier) Without Bose®: 25×4
Output impedance		(ohm)	4

AUDIO SYSTEM STRUCTURAL VIEW

id092000100200

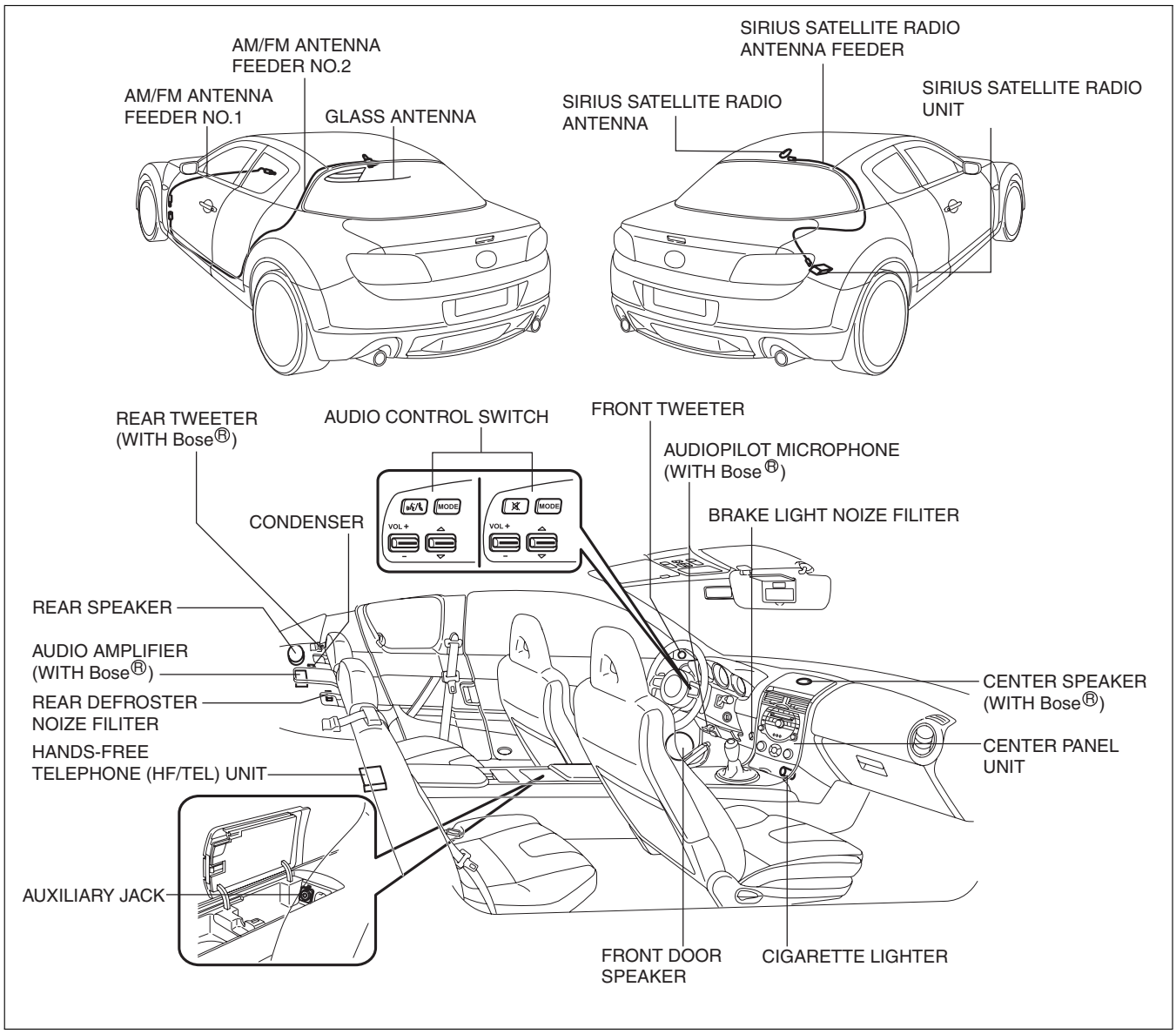

ar8uun00000230

AUDIO SYSTEM BLOCK DIAGRAM

id092000100300

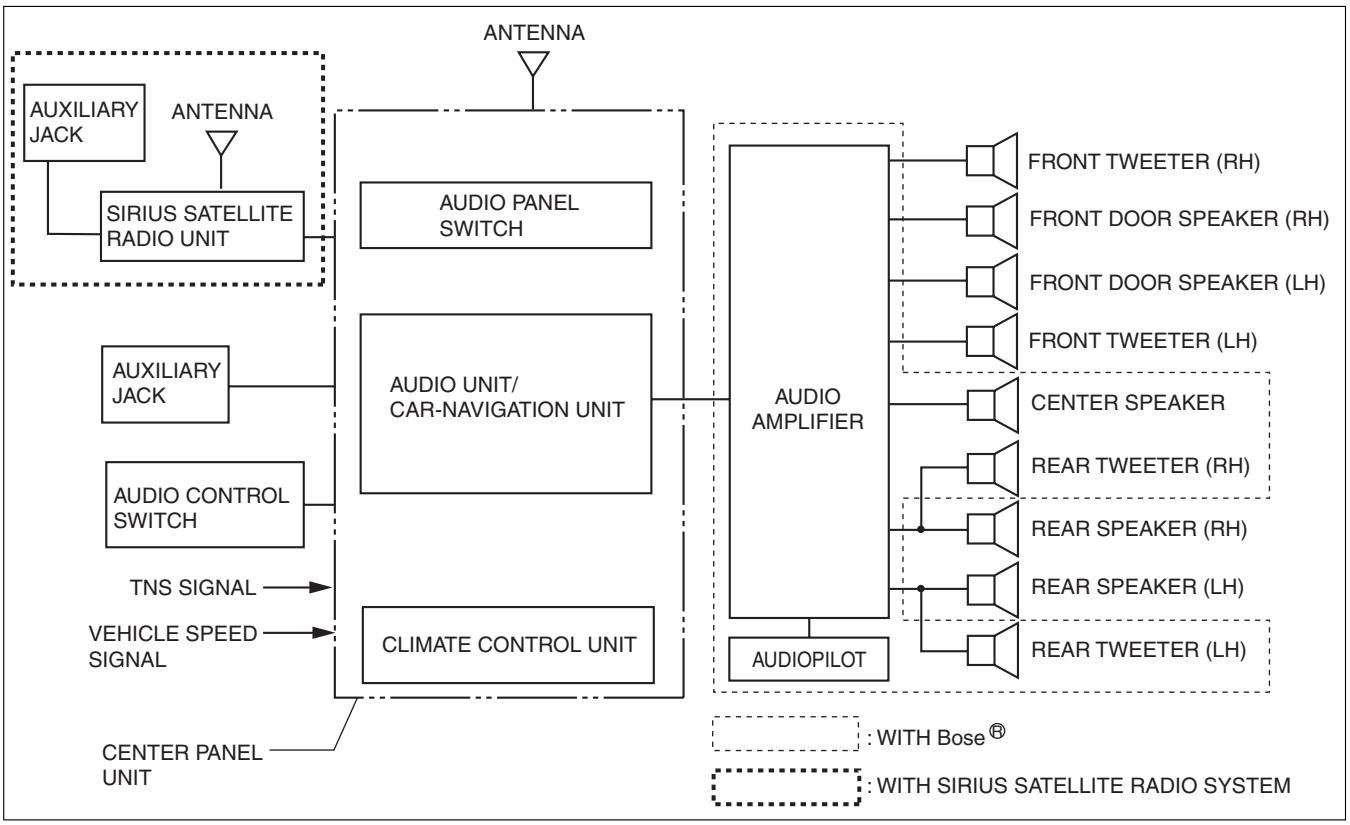

ar8uun00000317

CENTER PANEL UNIT OUTLINE

id092000101400

- The center panel unit, which integrates the audio unit and climate control unit and audio switches on the center panel, has been adopted to realize a design with a sense of unity. (with audio system)
- The center panel unit, which integrates the car-navigation unit and climate control unit and LCD on the center panel, has been adopted to realize a design with a sense of unity. (with car-navigation system)

CENTER PANEL UNIT CONSTRUCTION/OPERATION

id092000195500

With Audio System

Constitution

- A center panel unit has been adopted with the audio unit and climate control unit installed, and audio switch built into the center panel.

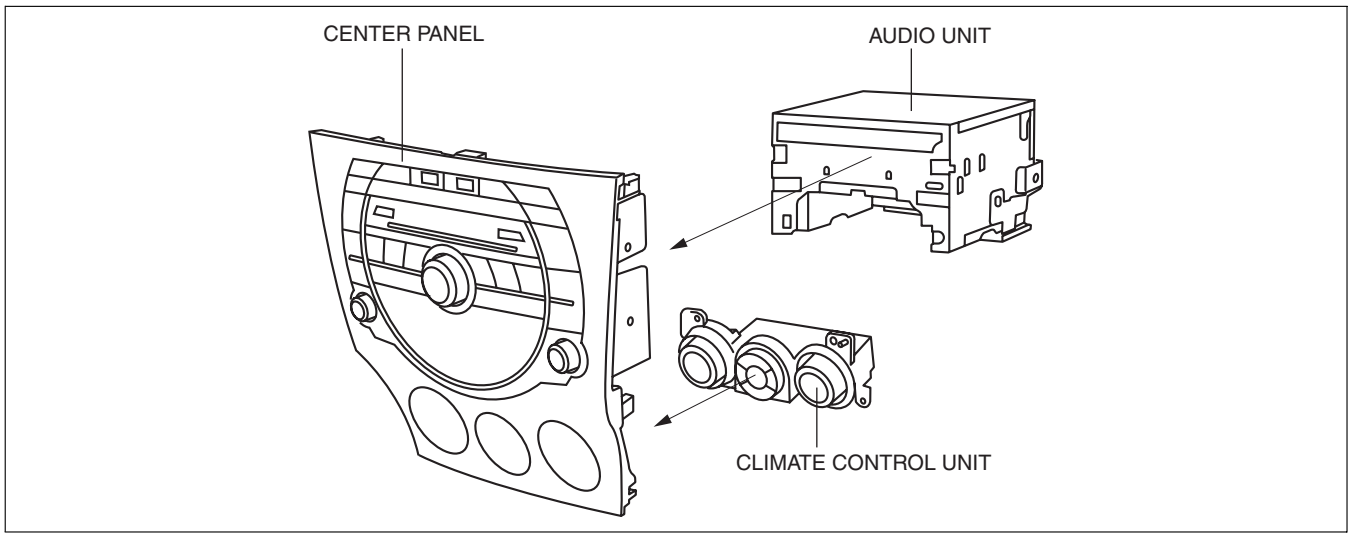

ar8uun00000021

Position of switches

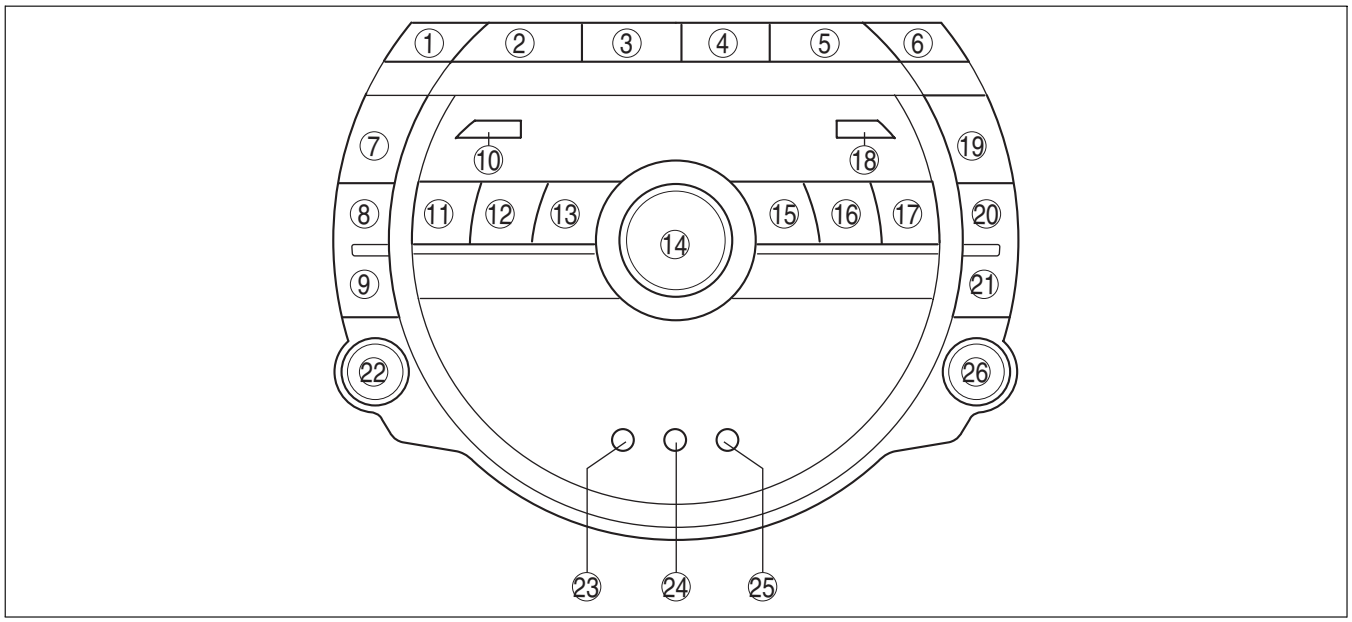

ar8uun00000306

1	INSTANT REPLAY switch
2	FM/AM switch
3	CD switch
4	SAT switch
5	MEDIA switch
6	Outside temperature switch
7	SCAN switch
8	SEEK/TRACK switch (up)
9	SEEK/TRACK/REPLAY switch (down)
10	LOAD switch

11	RPT/PRESET switch 1
12	RDM/PRESET switch 2
13	PRESET switch 3
14	POWER/VOLUME switch
15	PRESET switch 4
16	PRESET switch 5
17	PRESET switch 6
18	EJECT switch
19	AUTO-M switch
20	DISC/FOLDER switch (up)

21	DISC/FOLDER/ CATEGORY switch (down)
22	TUNE/DISP/ESN switch
23	H switch (clock)

24	M switch (clock)
25	00 switch (clock)
26	AUDIO CONT/TEXT switch

Action illumination

- The action illumination is linked to the audio switch operation during TNS ON to turn the audio panel illumination on and off.
- The target operations of the action illumination are as follows:
  - — Volume adjustment
  - — Audio power supply ON/OFF
  - — Audio mode changing
  - — SEEK up/down
  - — Track up/down
  - — Programming radio stations using the preset switch
  - — Searching for radio stations using the SCAN switch
  - — Entering SIRIUS satellite radio mode using the SAT switch/INSTANT REPLAY switch
  - — Searching for radio stations using the SEEK/ TRACK switch while in the SIRIUS satellite radio mode

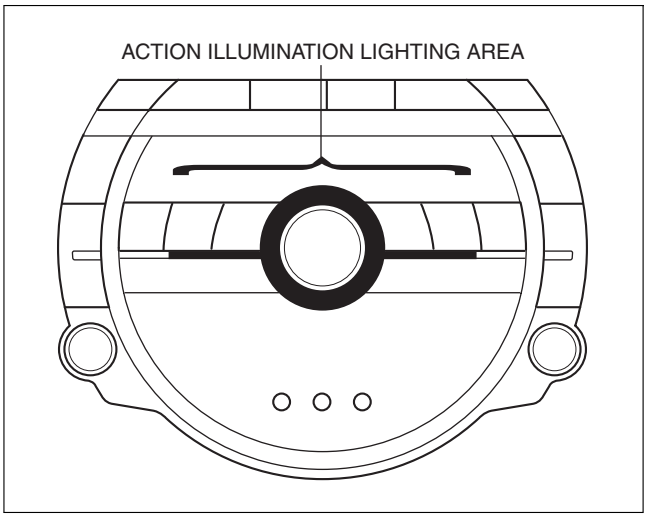

ar8uun00000024

With Car-navigation System
Constitution

- A center panel unit has been adopted with the car-navigation unit and climate control unit installed, and LCD built into the center panel.

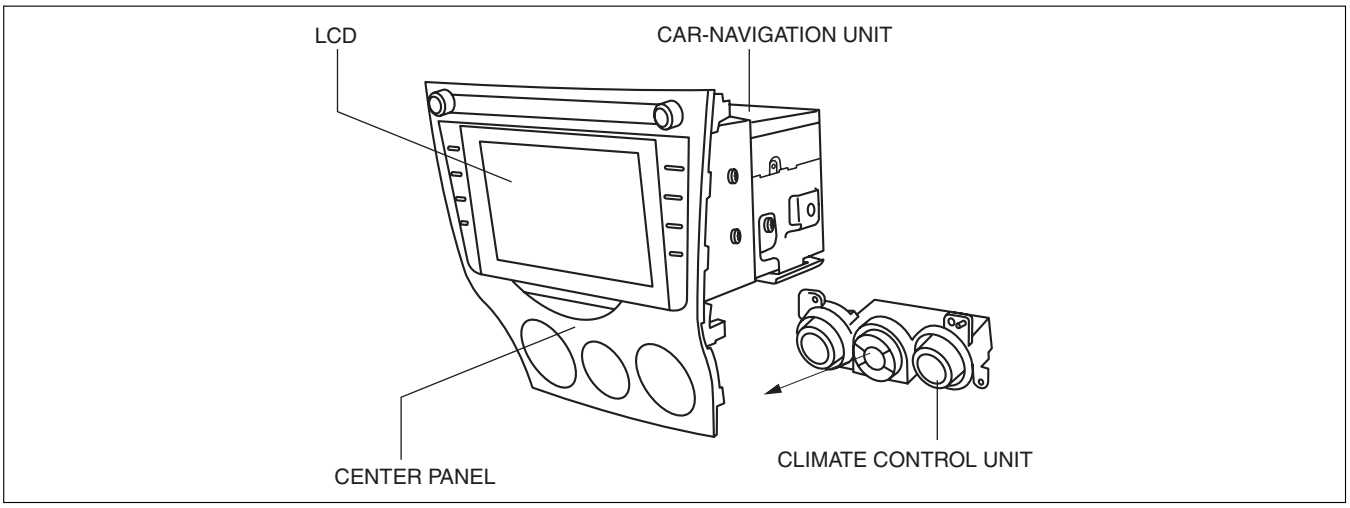

ar8uun00000022

Position of switches

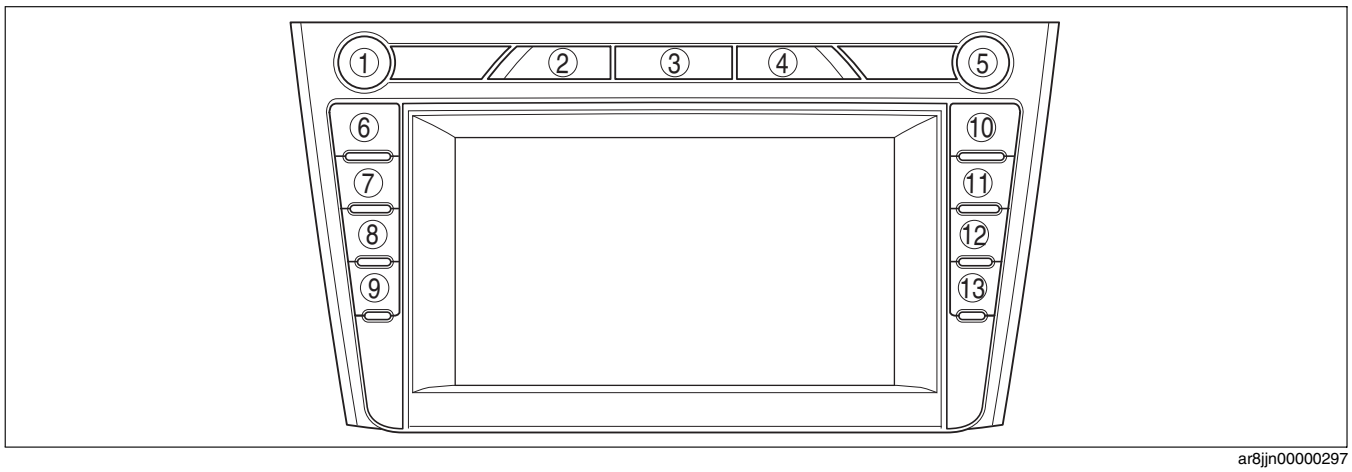

ar8jjn00000297

1	POWER/VOLUME switch
2	SCAN switch
3	Outside temperature switch
4	DISP switch
5	TUNE/AUDIO switch
6	LOAD switch

7	SOURCE switch
8	SEEK switch (up)
9	SEEK switch (down)
10	MAP switch
11	RETURN switch
12	MENU switch
13	VOICE switch

AUDIO UNIT OUTLINE

id092000108700

- Three types of audio units, TYPE A (AM/FM tuner/CD player-integrated) and TYPE B (AM/FM tuner/CD changer-integrated) and TYPE C (AM/FM tuner/MP3 applicable CD changer-integrated), are provided.
- A self-diagnostic function has been adopted.
- A diagnostic assist function has been adopted.

AUDIO UNIT CONSTRUCTION

id092000108900

Structural view

TYPE A

- Integrated with AM/FM tuner/CD player.

TYPE B

- Integrated with AM/FM tuner/CD changer.

TYPE C

- Integrated with AM/FM tuner/MP3 applicable CD changer.

Structural view

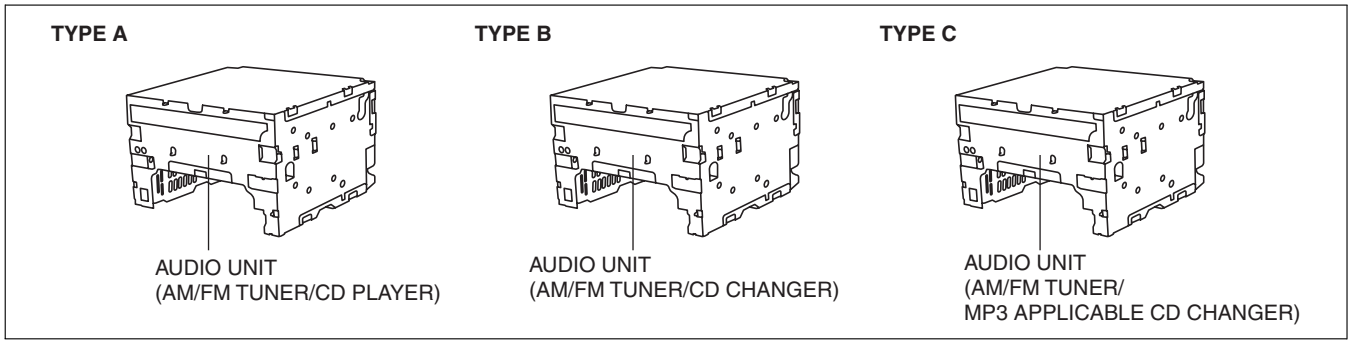

ar8uun00000023

Terminal Layout and Signal
Car-navigation unit connector

Terminal		Signal
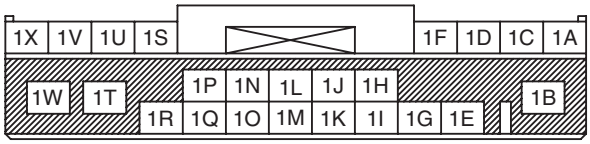	1A	Front door speaker and front tweeter (LH) (+)
	1B	B+
	1C	Front door speaker and front tweeter (LH) (–)
	1D	Front door speaker and front tweeter (RH) (+)
	1E	TNS (+)
	1F	Front door speaker and front tweeter (RH) (–)
	1G	TNS (–)
	1H	—
	1I	Vehicle speed signal
	1J	AMP control*1
	1K	—
	1L	DIM cancel
	1M	—
	1N	Audio control switch 1
	1O	CAN (+)
	1P	Audio control switch 2
	1Q	CAN (–)
	1R	ACC
	1S	Rear speaker (LH) (+)
	1T	AUDIOPILOT*1
	1U	Rear speaker (LH) (–)
	1V	Rear speaker (RH) (+)
	1W	Power ground
	1X	Rear speaker (RH) (–)
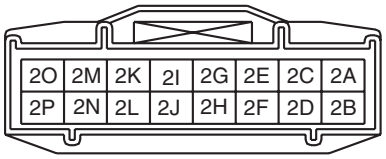	2A	Power ground
	2B	TEL (+)*2
	2C	Input signal RH (+)*3
	2D	—
	2E	Input signal LH (+)*3
	2F	—
	2G	Signal ground
	2H	—
	2I	—
	2J	TEL (–)*2
	2K	—
	2L	—
	2M	AUX CONT*3
	2N	—
	2O	ACC*4
	2P	B+*4

*1 : With Bose®
*2 : With H/F TEL system
*3 : Without SIRIUS satellite radio system
*4 : With SIRIUS satellite radio system

AUTO LEVEL CONTROL (ALC) FUNCTION

id092000106900

- Adjusts the audio volume so that the sound is balanced against wind and road noise while driving.

AUTO LEVEL CONTROL (ALC) OPERATION

id092000106800

- The audio unit changes the volume automatically based on the vehicle speed signal sent from the instrument cluster.

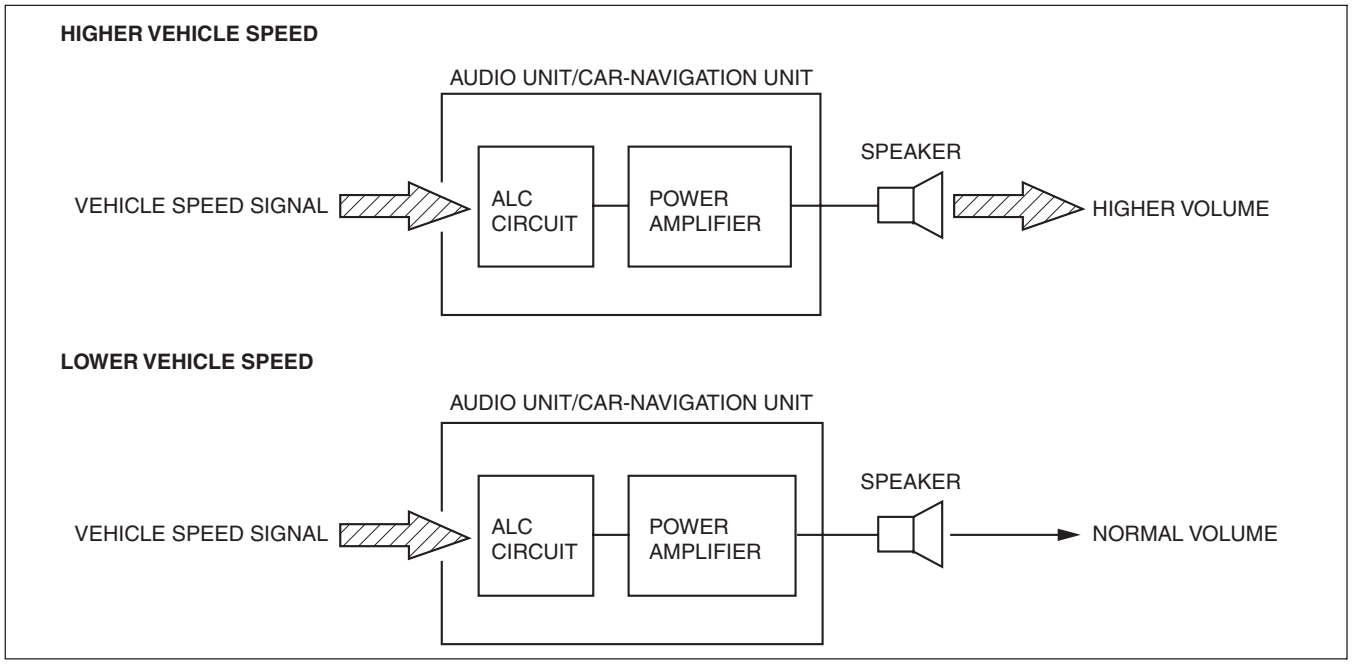

ar8uun00000027

With Audio Unit

The ALC function is divided into eight modes that can be used effectively to match the driving conditions.

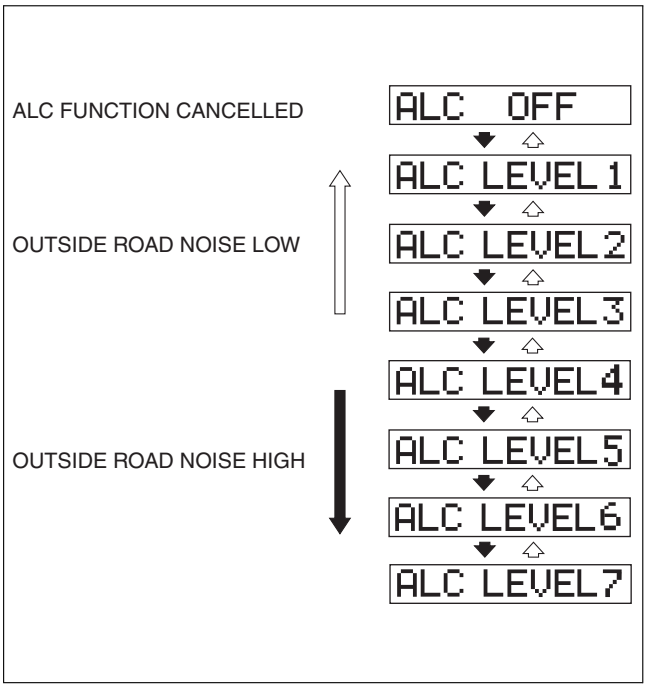

am6zzn0000067

With Car-navigation Unit

The ALC function is divided into four modes that can be used effectively to match the driving conditions.

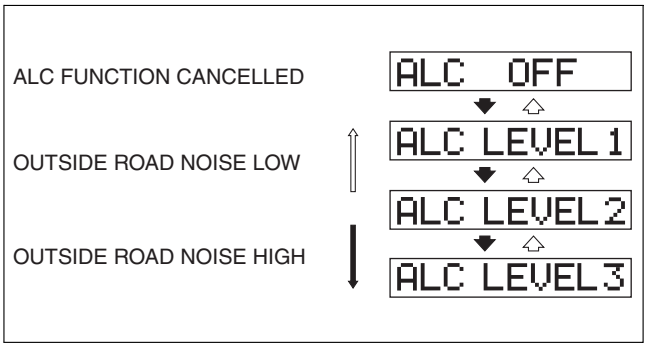

ar8uun00000304

ON-BOARD DIAGNOSTIC SYSTEM FUNCTION [AUDIO SYSTEM]

id0920001018a1

- The on-board diagnostic system has a self-diagnostic function and diagnostic assist function to help technicians locate malfunctions.

Self-diagnostic Function

Malfunction detection function

- The malfunction detection function detects malfunctions occurring in the audio system.

Memory function

- The memory function detects a malfunction, changes it to a DTC, and stores it in the memory. The memory can store a maximum of three DTCs. If another malfunction is detected when three DTCs are already stored, the memory function clears the oldest DTC and stores the new one.
- Once a DTC is stored, it can only be cleared by the designated procedure; not by turning the ignition switch to the LOCK position or disconnecting the negative battery cable. The procedure is mentioned in the Workshop Manual.

Display function

- When the self-diagnostic function is activated, the information display displays the DTC stored in the memory.
- The DTC consists of the following codes:
  - — Supplier code (indicates manufacturer)
  - — Device code (indicates malfunctioning part)
  - — Error code (indicates malfunction description)
- Refer to the Workshop Manual for the display method.

Supplier code	Supplier name
01	SANYO Automedia
02	Panasonic
03	Clarion
04	Pioneer
05	VISTEON

Device code	Parts name
03	CD player
06	CD changer
09	Audio unit
11	SIRIUS satellite radio system
16	CAN system
21	Center panel (audio panel)
22	MP3 applicable CD changer

Error code	Malfunction description
01	Internal mechanism error
02	Servo mechanism error
03	Mechanism stuck
07	Disc reading error
10	BUS line (communication line) error
12	CAN line (communication line) error
19	Communication line
20	Insufficient power supply
21	Amplifier related circuit
22	Tuner error

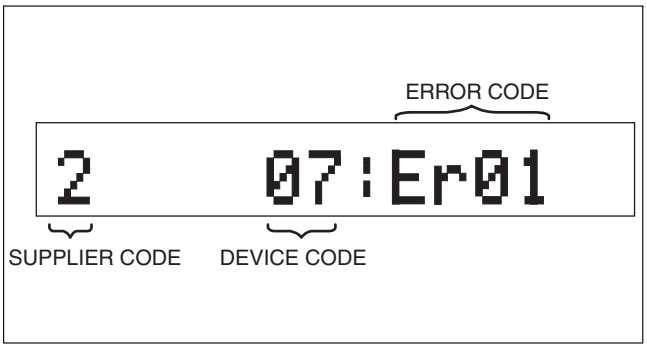

ar8uun00000028

Screen display		Malfunction location
DTC	Output signal	
03: Er01	—	CD player system
03: Er02	CHECK CD	CD player system
03: Er07	CHECK CD	CD player system
03: Er10	—	CD player communication circuit system
06: Er01	CHECK CD	MP3 applicable CD changer system
06: Er02	CHECK CD	MP3 applicable CD changer system
06: Er07	CHECK CD	MP3 applicable CD changer system
06: Er10	—	CD changer communication circuit system
09: Er20	—	Power supply circuit to audio unit
09: Er21	—	audio unit (peripheral circuit for power amplifier)
09: Er22	—	audio unit (peripheral circuit for tuner)
11: Er01	—	SIRIUS satellite radio system
11: Er03	—	SIRIUS satellite radio system
16: Er12	—	CAN system communication error
21: Er19	—	Center panel (audio panel) system
22: Er01	—	MP3 applicable CD changer system
22: Er02	CHECK CD	MP3 applicable CD changer system
22: Er07	CHECK CD	MP3 applicable CD changer system
22: Er10	—	MP3 applicable CD changer communication circuit system
no Err	—	No DTCs stored

Diagnostic Assist Function

- The diagnostic assist function displays the operating condition of the following functions (components) and forces them to operate in order to examine whether they are malfunctioning or not.
- For the start procedure of each mode, refer to the Workshop Manual.

Switch inspection

- Activates a buzzer sound when a switch is operated and examines each of the switches.

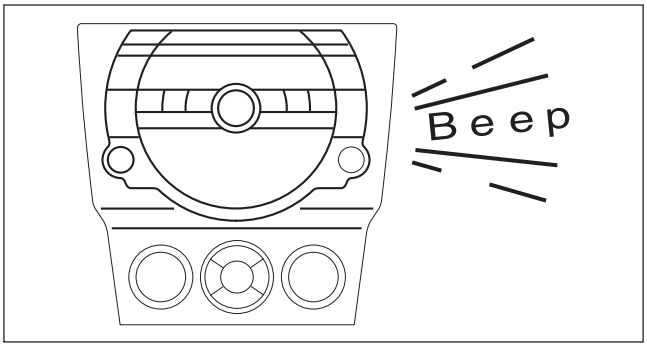

ar8jjn00000309

Speaker inspection

- Verifies that the speakers output sound in the following order and examines the speakers and wiring harness between the audio unit and speaker.

  Without Bose®

  — Front door speaker (LH) and front tweeter (LH)
  — Front door speaker (RH) and front tweeter (RH))
  — Rear speaker (RH)
  — Rear speaker (LH)

  With Bose®

  — Front door speaker (LH) and front tweeter (LH)
  — Center speaker
  — Front door speaker (RH) and front tweeter (RH)
  — Rear speaker (RH) and rear tweeter (RH)
  — Rear speaker (LH) and rear tweeter (LH)

Radio reception condition inspection

- The diagnostic assist function displays the radio reception condition in 11 levels (0-10) to assist in determining the condition of the antenna, antenna feeders, and audio unit (tuner).

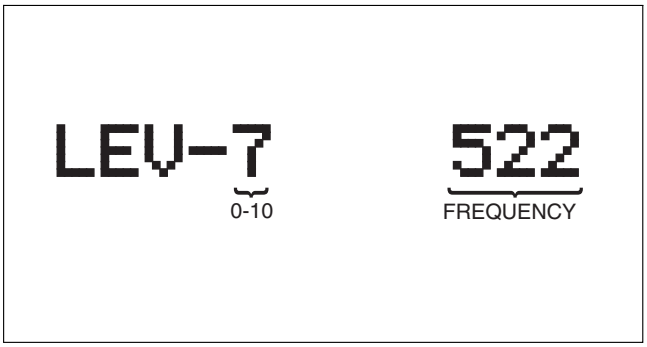

am6zzn0000090

Audio amplifier specification inspection

- Displays the audio amplifier specification on the LCD screen to verify its specification.

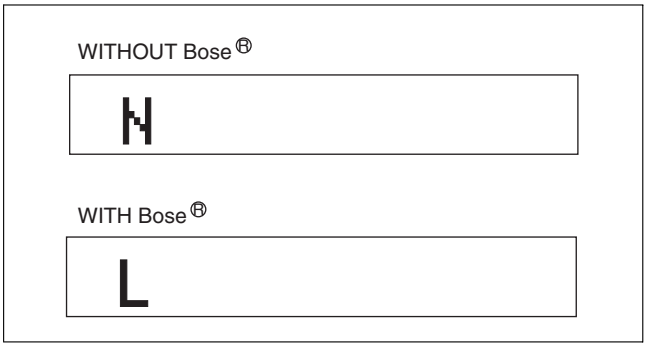

ar8uun00000029

Audio amplifier (with Bose®) identify inspection

- Inspection of the audio amplifier can be performed by operating the following speakers.
  With standard seat
  — Front door speaker
  With leaser seat
  — Rear speaker

SIRIUS Satellite Radio Software Version Verification

- Displays the SIRIUS satellite radio software version on the information display.

ar8uun00000372

ON-BOARD DIAGNOSTIC SYSTEM FUNCTION [HANDS-FREE TELEPHONE (HF/TEL) SYSTEM]

id0920001018a8

- The on-board diagnostic system has a self-diagnostic function and diagnostic assist function to help technicians locate malfunctions.

Self-diagnostic Function
Malfunction detection function

- The malfunction detection function detects malfunctions occurring in the HF/TEL system.

Memory function

- The memory function converts a malfunction detected by the malfunction detection function to a DTC and stores it. The error currently occurring is stored as a present malfunction.Up to three DTCs (with audio unit), or six (with car-navigation unit) can be stored as a present malfunction.The error that has previously occurred is stored as a past malfunction.Up to three DTCs (with audio unit), or six (with car-navigation unit) can be stored as a past malfunction. The DTCs, together with the number of times the ignition switch has been turned off after the occurrence of an error (maximum of 255 times), are stored as a past malfunction.

Display function
With audio unit

- When the self-diagnostic function is activated, the information display displays the DTC stored in the memory.
- The DTC consists of the following codes and numbers:
  — Malfunction type
  — Number of times the ignition switch has been turned off after the occurrence of an error
  — Device code
  — Error code
- Refer to the Workshop Manual for the display method.

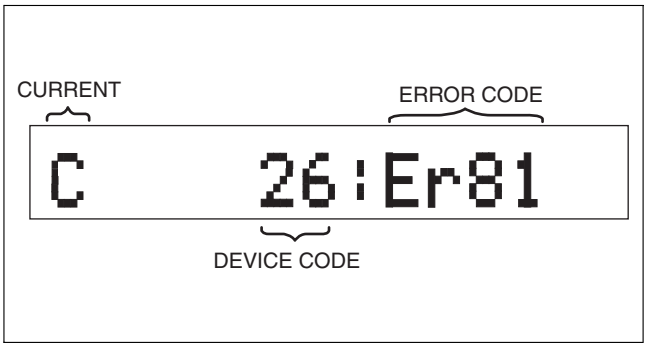

ar8uun00000025

With car-navigation unit

- When the self-diagnostic function is activated, the displays the DTC stored in the memory.
- The DTC consists of the following codes and numbers:
  Error history display screen
  — Error items
  — Current malfunction
  — Number of times the ignition switch has been turned off after the occurrence of an error
  — Detail Switch
  Detail display screen
  — Device code
  — Error code
  — Check content
  — Number of times present/past malfunction has occurred
- Refer to the Workshop Manual for the display method.

Error history display screen

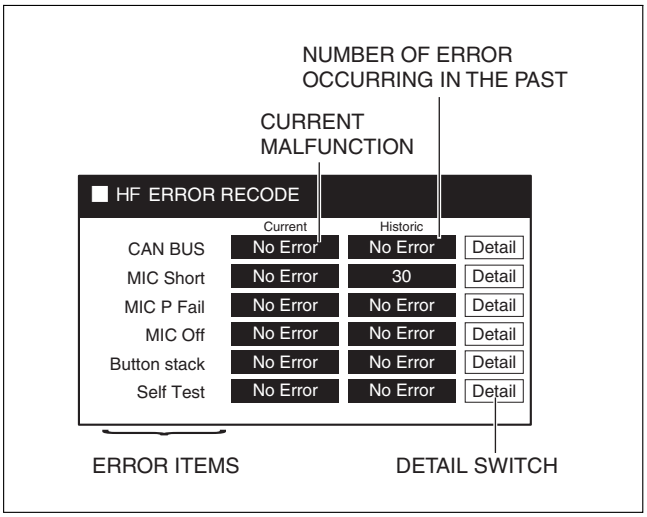

am6zzn0000091

Detail display screen

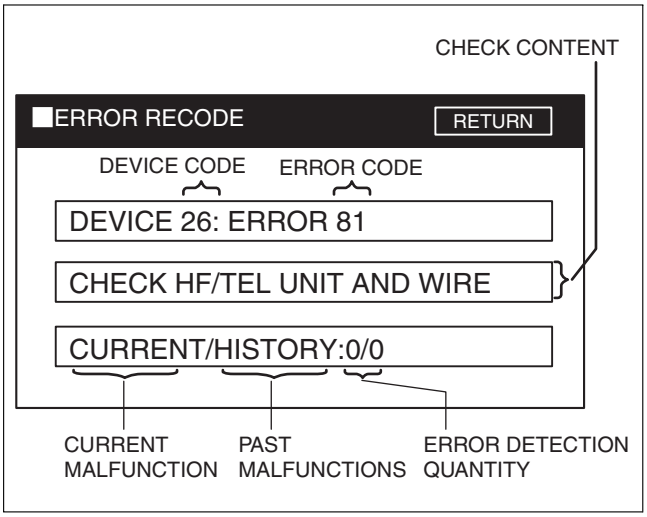

am6zzn0000091

DTC table

Screen display			Inferred cause/verified content
Car-navigation unit		Audio unit	
Device code	Error code		
26	81	26: Er81	CAN system
	82	26: Er82	Short to power supply in wiring harness between microphone (Input signal) and HF/TEL unit
	83	26: Er83	Short to GND/power supply in microphone power supply circuit
	84	26: Er84	Any of the following is detected: • The microphone power supply circuit is not connected. • Open circuit in the microphone input circuit • Microphone input circuit short to body ground
	85	26: Er85	• Poor contact in the hands-free telephone switch or hands-free telephone unit (HF/TEL unit) connector • Voice recognition/hands-free switch malfunction
	86	26: Er86	HF/TEL unit malfunction
No Error		no Err	DTC is not recorded.

Diagnostic Assist Function

With audio unit

- The diagnostic assist function displays the operating condition of the following functions (components) and forces them to operate in order to examine whether they are malfunctioning or not.
- For the start procedure of each mode, refer to the Workshop Manual.

Software version verification

- Displays the software version on the information display.

am5ezw0000197

Connection condition verification

- Displays the connection status on the information display and examines the HF/TEL system-related unit, wiring harness, and connector.

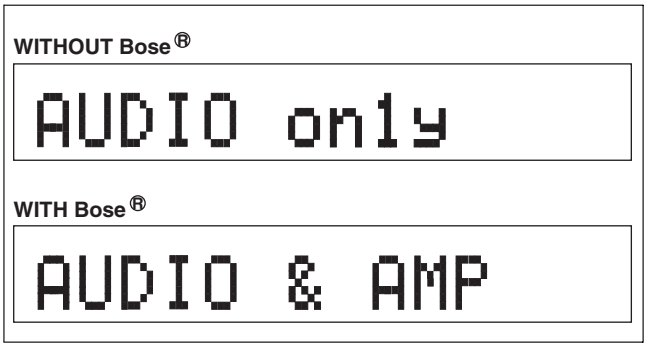

ar8uun00000026

Password reset

- Operate the switch and reset the password.

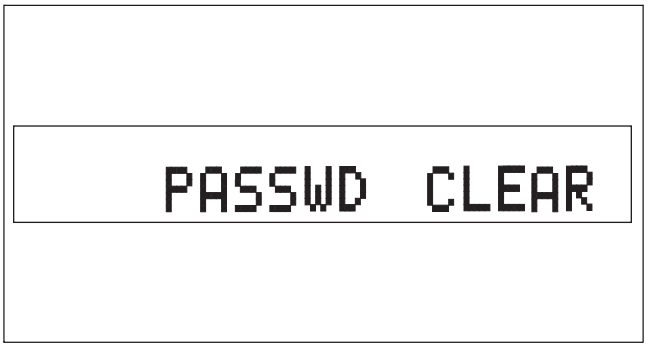

am5ezw0000197

With car-navigation unit

- Input a diagnostic assist code and display the unit's operation conditions, or force the operation to examine the integrity of functions (parts).
- For start-up methods of each mode, refer to the Workshop Manual.

Diagnostic assist code table

No.	Content/function
37	Connection condition verification
38	Software version verification
39	Password reset

ON-BOARD DIAGNOSTIC SYSTEM FUNCTION [CAR-NAVIGATION SYSTEM]

id0920001018b2

- The on-board diagnostic system has a self-diagnostic function and diagnostic assist function to help technicians locate malfunctions.

Self-diagnostic Function

Malfunction detection function

- The malfunction detection function detects malfunctions occurring in the car-navigation system.

Memory function

- The memory function detects a malfunction, changes it to a DTC, and stores it in the memory. The memory can store a maximum of twenty DTCs. If another malfunction is detected when twenty DTCs are already stored, the memory function clears the oldest DTC and stores the new one.
- Once a DTC is stored, it can only be cleared by the designated procedure; not by turning the ignition switch to the LOCK position or disconnecting the negative battery cable. The procedure is mentioned in the Workshop Manual.

Display function

- When the self-diagnostic function is activated, the information display displays the DTC stored in the memory.
- The DTC consists of the following codes:
  - — Device code
  - — Error code
  - — Malfunction contents
  - — Error-detection date and time
- Refer to the Workshop Manual for the display method.

Device code	Parts name
09	Car-navigation unit
16	CAN system
17	CAN communication line
21	Switch panel
22	MP3 applicable CD changer
25	Navigation

Error code	Malfunction description
01	Internal mechanism error
02	Servo mechanism error
07	Disc reading error
10	BUS line (communication line) error
11	CAN line (communication line) error
12	CAN line (communication line) error
19	Panel mecha error
20	Insufficient power supply
21	Amplifier related circuit
22	Tuner error
23	Abnormally high temperature and excess-voltage
24	Amplifier output error
32	TAB2 communication error

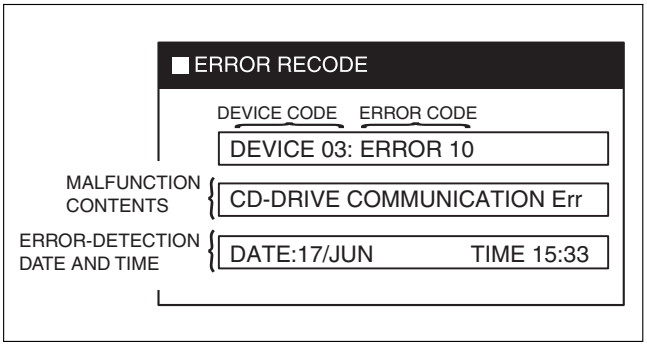

ar8uun00000007

Screen display			Malfunction location
Device code	Error code	Output signal	
09	20	CHECK BATTERY	Car-navigation unit
	21	CHECK SPEAKER AND WIRE	Car-navigation unit
	22	TUNER MALFUNCTION	Car-navigation unit
	23	—	Car-navigation unit
	24	CHECK SPEAKER AND WIRE	Car-navigation unit
16	12	CHECK VEHICLE WIRE	CAN system communication error
17	11	—	Communication error to instrument cluster
21	19	CHECK PANEL CONNECTOR	Switch panel system
22	01	CD-DRIVE MALFUNCTION	MP3 applicable CD changer system
	02	CD-DRIVE MALFUNCTION	MP3 applicable CD changer system
	07	CHECK CD-DRIVE AND DISC	MP3 applicable CD changer system
	10	CD-DRIVE COMUNICATION Err	MP3 applicable CD changer system
25	32	TAB2 Err	Car-navigation unit
No Error		—	—

Diagnostic Assist Function

- Input a diagnostic assist code and display the unit's operation conditions, or force the operation to examine the integrity of functions (parts).
- For start-up methods of each mode, refer to the Workshop Manual.

Diagnostic assist code table

No.	Content/function
01	Display inspection
02	Switch inspection
03	Speaker inspection
04	Radio reception condition inspection
05	Antenna control output condition inspection
06	Supplier identification
07	Audio amplifier specification inspection
08	Display open/close inspection
09	Radio SEEK inspection
10	Software version verification
11	DVD/CD drive inspection

Diagnostic check

- The following inspections can be performed by launching the diagnostic mode.

Inspection item list

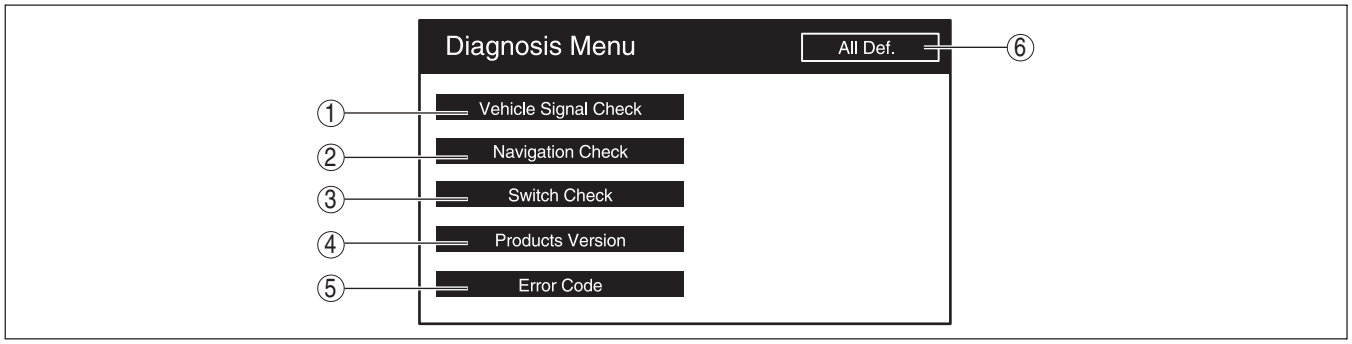

am6zzn0000095

No.	Name	Content/function
1	Vehicle Signal Check	Perform the vehicle signal check.
2	Navigation Check	Go to the Navigation Check Menu.
3	Switch Check	Perform the panel switch inspection.
4	Products Version	Verify the products version.
5	Error Code	**Caution** • **This item does not operate because it is a manufacturer exclusive item.**
6	All Def.	**Caution** • **This item does not operate because it is a manufacturer exclusive item.**

Navigation check
Inspection item list

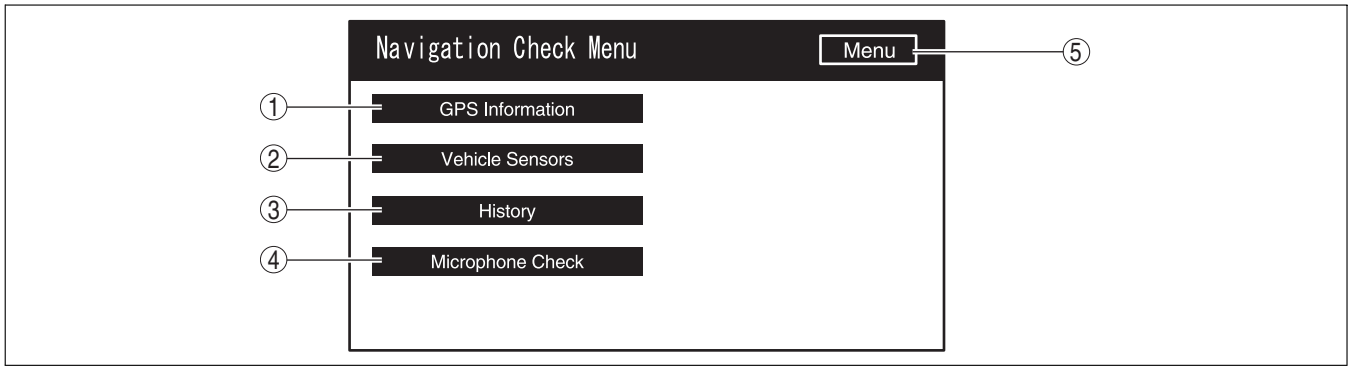

ar8uun00000236

No.	Name	Content/function
1	GPS Information	Display the GPS information.
2	Vehicle Sensors	splay the vehicle sensors.
3	History	Display the history.
4	Microphone Check	Verify the microphone condition.
5	Menu	Return to the Diagnosis Menu.

AUDIO AMPLIFIER CONSTRUCTION

id092000819300

Structural view

- The audio amplifier are located inside the rear package center trim.
- Converts music signals (analog voltage waveform) from the audio unit to digital signals, then amplifies and outputs them.

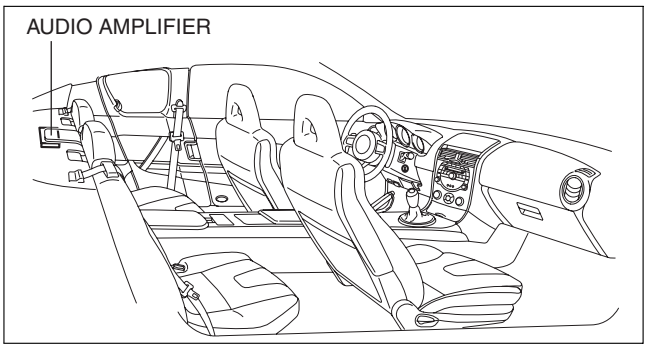

ar8uun00000009

Terminal Layout and Signal

Terminal		Signal
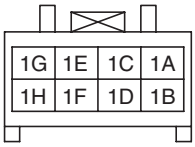	1A	B+
	1B	Power ground
	1C	Rear speaker (LH) and rear tweeter (LH) output (-)
	1D	Rear speaker (LH) and rear tweeter (LH) output (+)
	1E	Rear speaker (RH) and rear tweeter (RH) output (-)
	1F	Rear speaker (RH) and rear tweeter (RH) output (+)
	1G	Center speaker output (-)
	1H	Center speaker output (+)
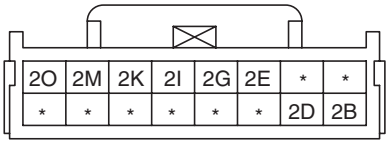	2A	—
	2B	Front door speaker (LH) output (-)
	2C	—
	2D	Front door speaker (LH) output (+)
	2E	Front tweeter (RH) (+)
	2F	—
	2G	Front tweeter (RH) (-)
	2H	—
	2I	Front tweeter (LH) (+)
	2J	—
	2K	Front tweeter (LH) (-)
	2L	—
	2M	Front door speaker (RH) output (-)
	2N	—
	2O	Front door speaker (RH) output (+)
	2P	—

Terminal		Signal
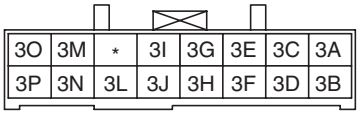	3A	SW B+ (AMP control)
	3B	SPEED signal input
	3C	Front door speaker and front tweeter (LH) input (-)
	3D	Front door speaker and front tweeter (LH) input (+)
	3E	Front door speaker and front tweeter (RH) input (-)
	3F	Front door speaker and front tweeter (RH) input (+)
	3G	Rear speaker (LH) input (-)
	3H	Rear speaker (LH) input (+)
	3I	Rear speaker (RH) input (-)
	3J	Rear speaker (RH) input (+)
	3K	—
	3L	AUDIOPILOT control
	3M	—
	3N	Mute signal
	3O	AUDIOPILOT input (+)
	3P	AUDIOPILOT input (-)

SIRIUS SATELLITE RADIO UNIT CONSTRUCTION

id092000829900

Structural view

- The SIRIUS satellite radio unit are located inside the trunk side trim (RH).
- Radio waves received from the SIRIUS satellite radio antenna are converted to audio signals and sent to the audio unit/car-navigation unit.

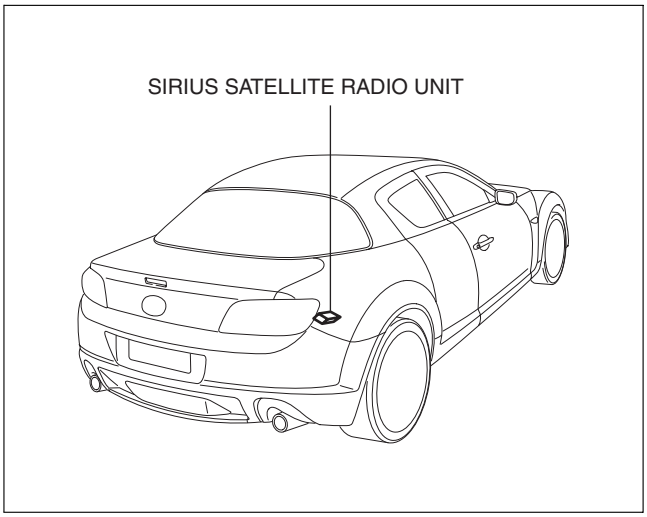

ar8uun00000300

Terminal Layout and Signal

Terminal		Signal
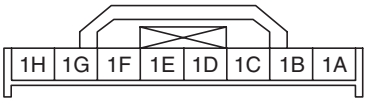	1A	—
	1B	—
	1C	—
	1D	AUDIO LH (+)
	1E	Signal ground
	1F	AUDIO RH (+)
	1G	AUX DET
	1H	Power ground
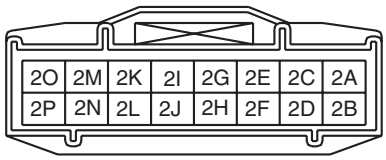	2A	Power ground
	2B	—
	2C	Output signal RH (+)
	2D	—
	2E	Output signal LH (+)
	2F	—
	2G	Signal ground
	2H	—
	2I	—
	2J	—
	2K	CAN (–)
	2L	CAN (+)
	2M	—
	2N	—
	2O	ACC
	2P	B+

ANTENNA CONSTRUCTION

id092000103200

SIRIUS Satellite Radio Antenna

- Installed to the center of the vehicle rear.
- SIRIUS satellite radio waves received from the roof antenna are sent to the SIRIUS satellite radio unit.

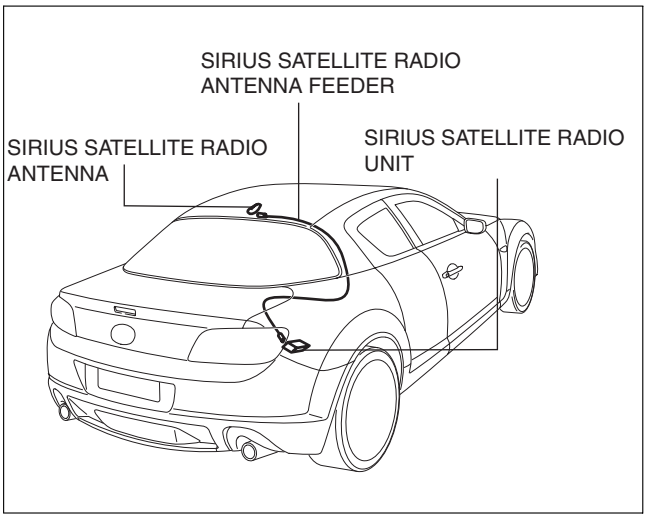

ar8uun00000232

Glass Antenna (for FM/AM)

- A glass antenna with high noise resistance has been adopted inside the rear window glass.

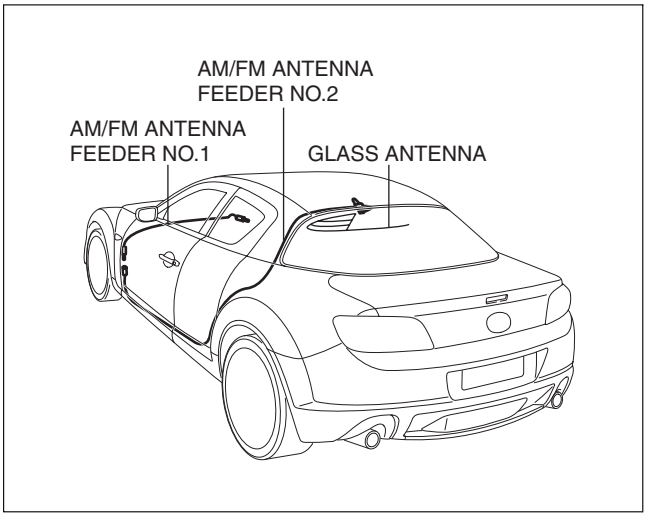

ar8uun00000020

AUDIO CONTROL SWITCH OUTLINE

id092000100500

- The audio control switches are located inside the left spoke of the steering wheel to make it possible to operate the audio without changing the driving posture.

AUDIO CONTROL SWITCH CONSTRUCTION/OPERATION

id092000100600

Construction

- Located on the left spoke of the steering wheel.

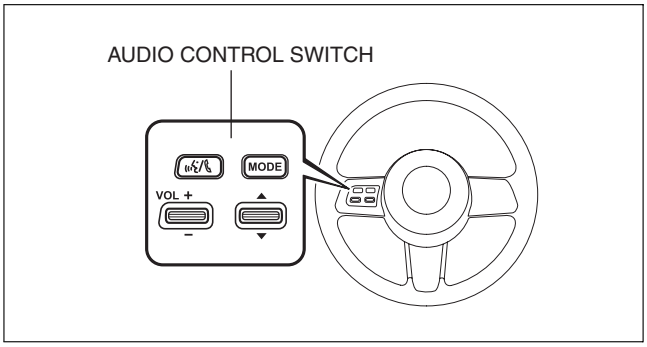

ar8uun00000017

Operation

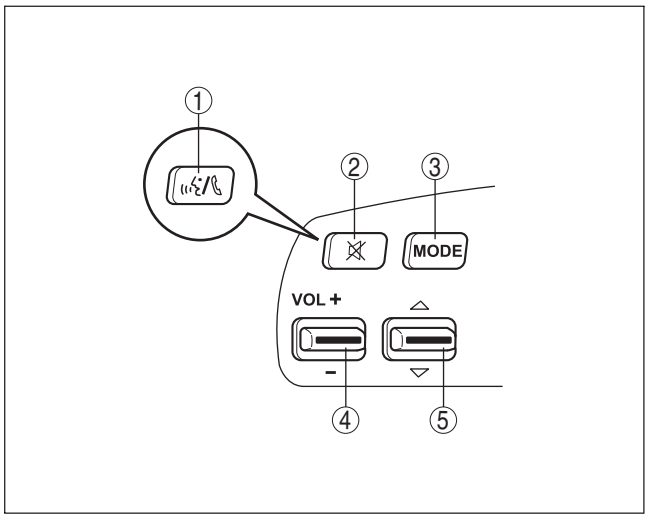

ar8uun00000018

No.	Switch (component)	Function
1	Voice recognition/hands-free switch (with hands-free telephone (HF/TEL) system)	• Launches the HF/TEL system • Performs car navigation system operation by voice.
2	Mute switch	Mute audio
3	Mode button	Selects the audio mode
4	Volume adjustment switch	Audio volume adjustment
5	Automatic band selector switch	Searches for radio stations automatically
	Cue switch	Searches for a track

CAR-NAVIGATION SYSTEM OUTLINE

id092000100800

- A touch panel has been adopted to the car-navigation system that can be operated by touching the on-screen buttons.
- A hybrid in car-navigation system and map-matching function has been adopted to improve accuracy of vehicle position.
- A voice recognition function has been adopted.
- The languages and voices available for use with the car-navigation unit include English, French, Spanish. However, the language used in this manual is in **English only.**

CAR-NAVIGATION SYSTEM SPECIFICATIONS

id092000101100

Car-navigation Unit

Item			Specification
Rated voltage		(V)	12
ROM type			DVD-ROM
Voice guidance output power		(W)	5
Display (for car-navigation system)	Size	(inch)	7 (wide)
	Type		TFT (Thin Film Transistor); Full-color

CAR-NAVIGATION SYSTEM STRUCTURAL VIEW

id092000100900

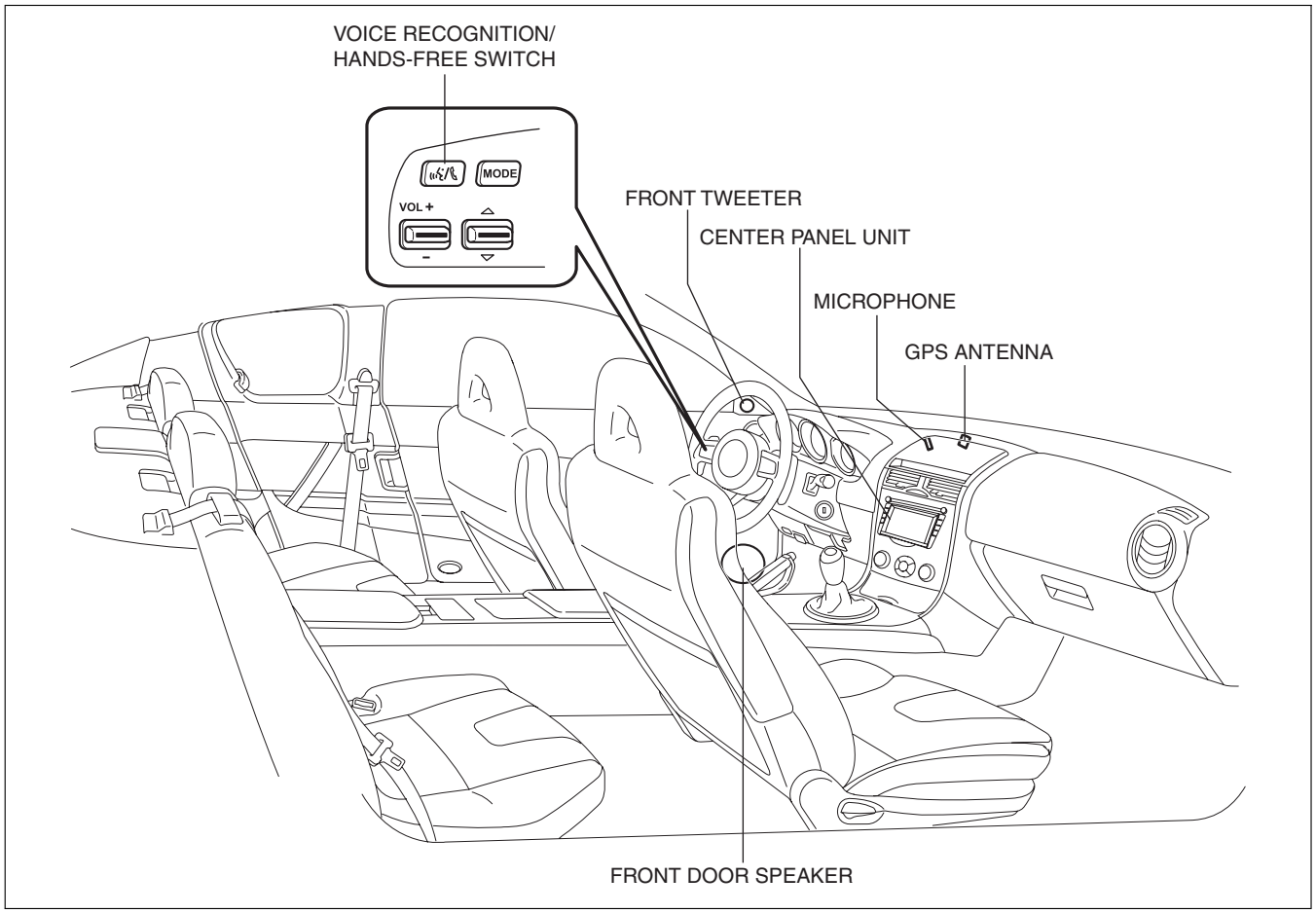

ar8uun00000013

CAR-NAVIGATION SYSTEM BLOCK DIAGRAM

id092000101000

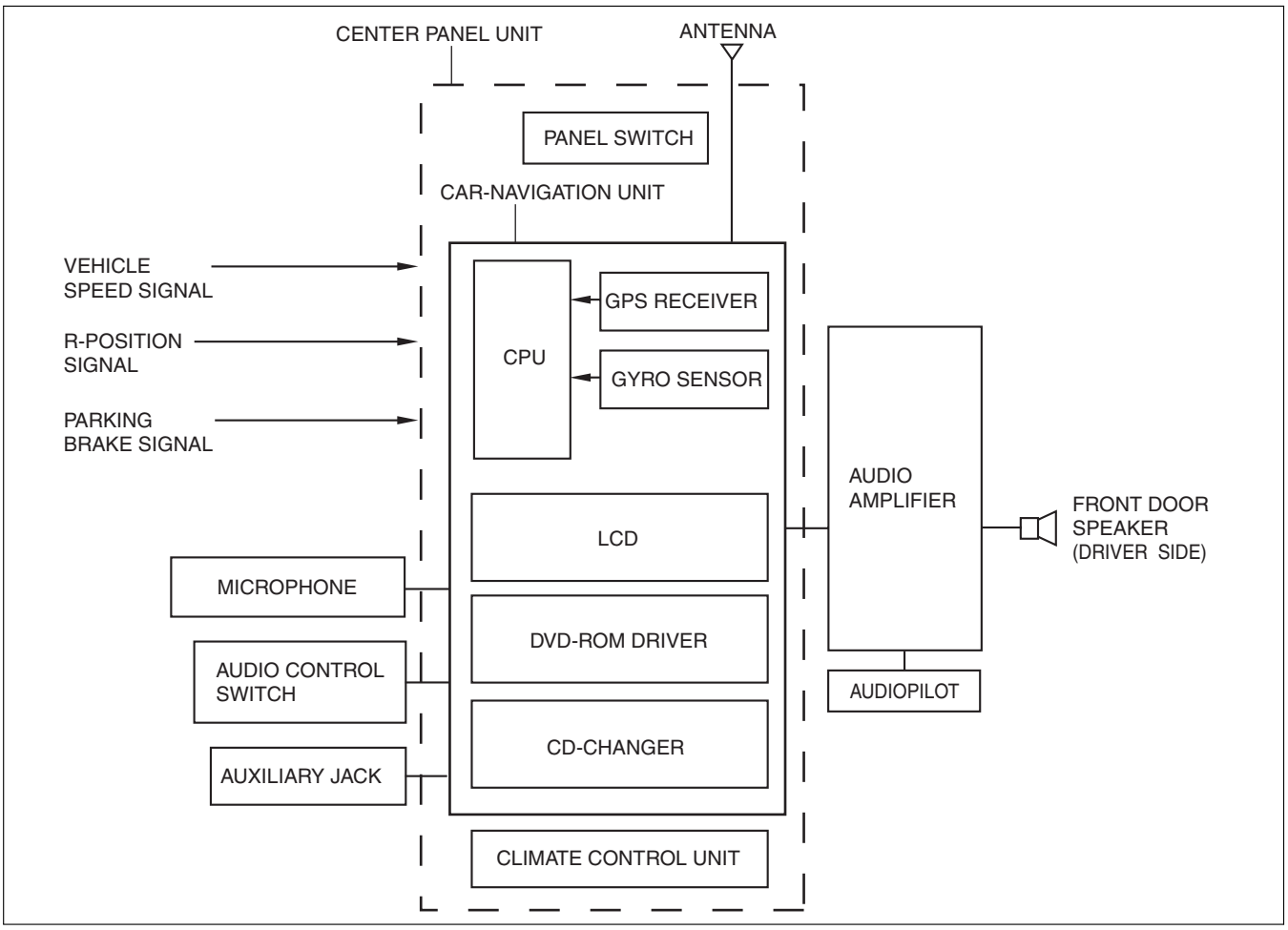

ar8uun00000005

NAVIGATION FUNCTION

id092000101300

Outline

- A vehicle's position is measured by a hybrid method of autonomous navigation (using yaw-rate signals from the gyro sensor and vehicle speed signals from the instrument cluster) and GPS navigation (using signals from GPS satellites). Accurate detection of the vehicle's position is possible based on the adoption of a map-matching function which specifies the vehicle's position as compared with the map data read from the DVD-ROM and the vehicle’s position measured from autonomous navigation and GPS navigation.
- Guidance to destination is provided via display of the recommended route on the map screen, as well as voice messaging guidance at intersections and points of divergence.
- Based on inputted signals and information on the DVD-ROM, the following features are available:
  - — Destination can be selected based on address, POI (Point of Interest), emergency, memory point, home, preset destination, intersection, freeway on/off ramp, coordinates, map or previous destination.
  - — Route information is available in map, turn list, turn arrow, enlarged junction diagram, freeway information mode.
  - — Voice guidance and menus are available in three languages.
  - — A map screen that displays maps in thirteen steps with scales from 50 m to 256 km {1/32 mile to 128 mile}.
  - — A map screen that displays routes according to search condition (info) and route preferences.

    Search condition
    Quick: The route with the quickest time will be used.
    Altern.: The alternative route will be used.
    Short: The route with the shortest distance.
    Route preferences
    Allow Major roads
    Allow toll road
    Allow restricted road
    Allow ferry

Map Screen Selection

Current position map

- The location of the vehicle and surrounding area are shown.

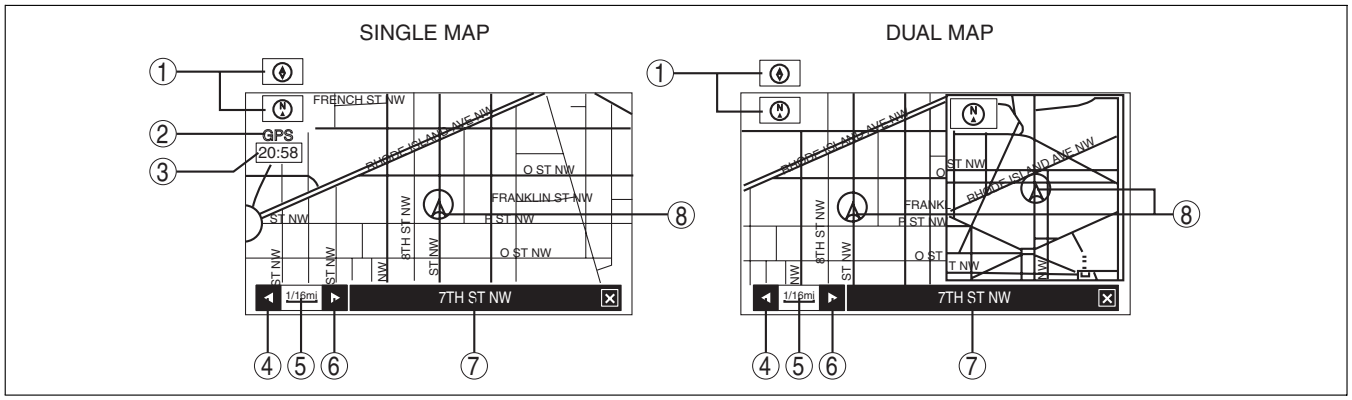

am6zzn0000063

No.	Contents	Description
1	Map orientation	**North up** • Geographic north is up. **Head up** • The direction you are heading is up.
2	GPS reception indicator	Illuminates when receiving signals from 3 or more satellites.
3	Clock	Clock will be displayed when set using the navigation screen.
4	Zoom in button	Enlarges the map. (more detail)
5	Map scale	The map can be displayed in 13 steps with scale from 50 m to 256 km {1/32 mile to 128 mile}
6	Zoom out button	Reduces the map.
7	Road name	Shows the name of the road you are currently driving on.
8	Vehicle position	Shows the current position and direction of the vehicle.

Scroll map mode

- This map can be scrolled with the cursor.

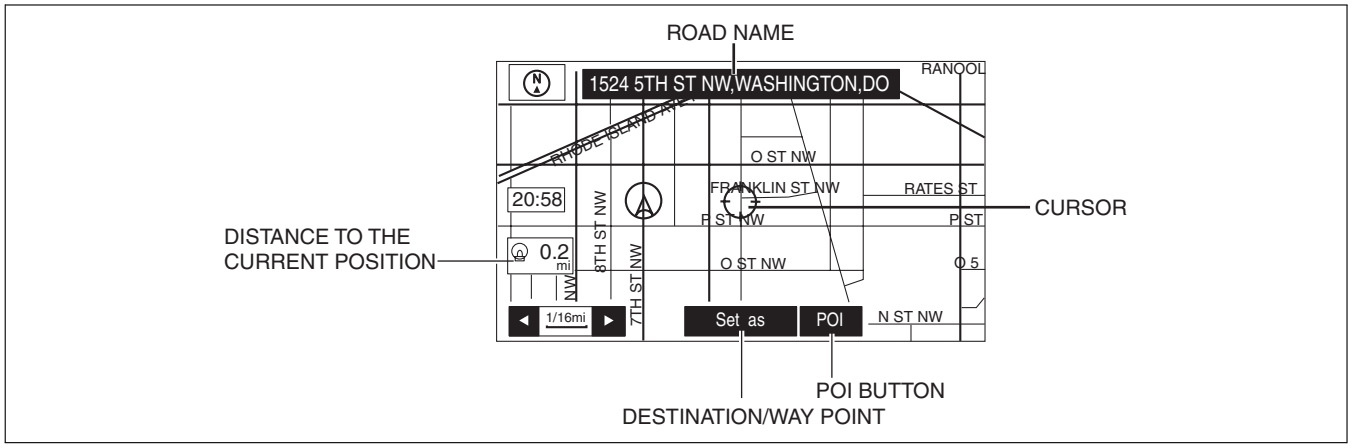

am6zzn0000063

Guide mode

- Displays an enlarged view of the road using an arrow to indicate destination, and also displays route and destination guidance information (while in route guidance.).

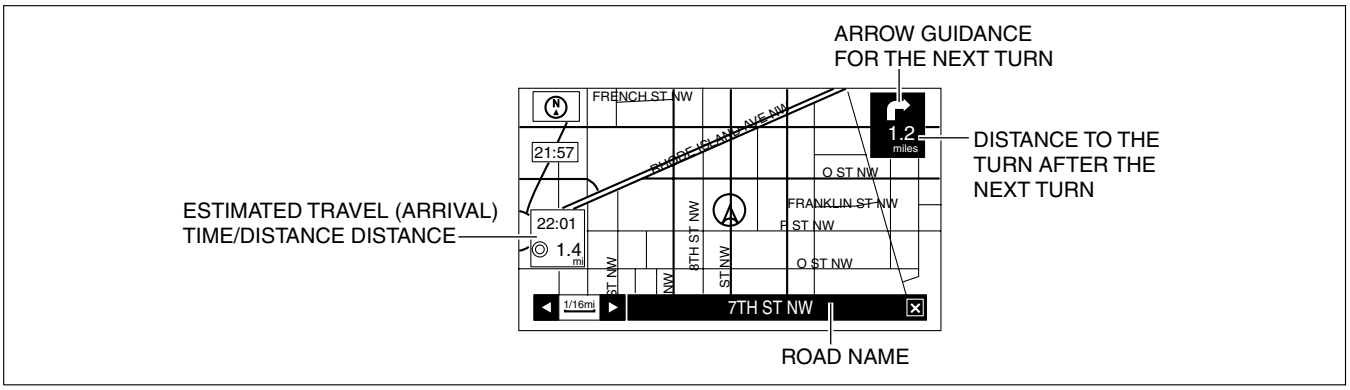

am6zzn0000063

Intersection zoom map

- An enlarged map is displayed when approaching a fork or intersection (while in route guidance.). It is activated by selecting Guidance Screen (On) in setup mode.

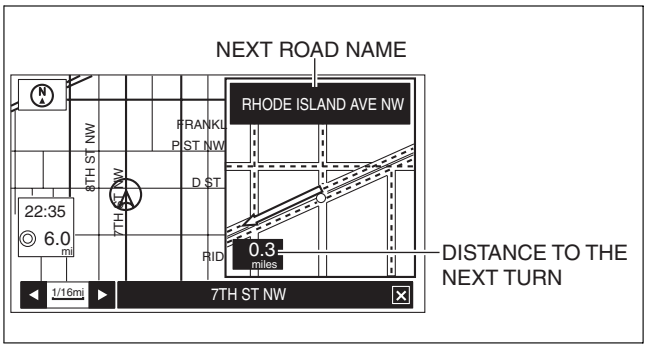

am6zzn0000063

Turn list

- While using route guidance, the directions for the next intersection where you have to turn are shown as a turn list.

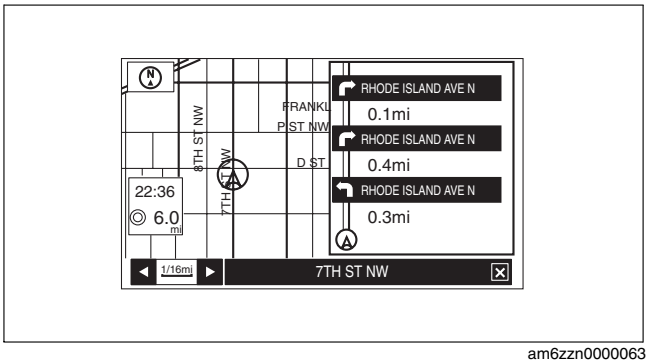

am6zzn0000063

Turn arrow

- While using route guidance, the directions for the next intersection where you have to turn are shown as a turn arrow.

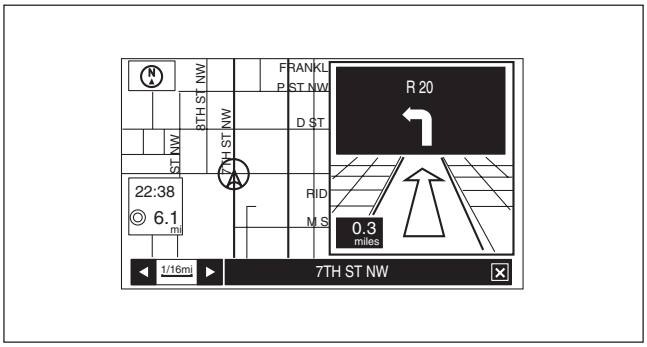

am6zzn0000063

Destination Setting Function

Outline

- The following instructions explain how destinations can be chosen and set.

Note

- A destination can be set to where the crosshair cursor indicates by selecting the Destination option of the scroll map mode pop-menu.

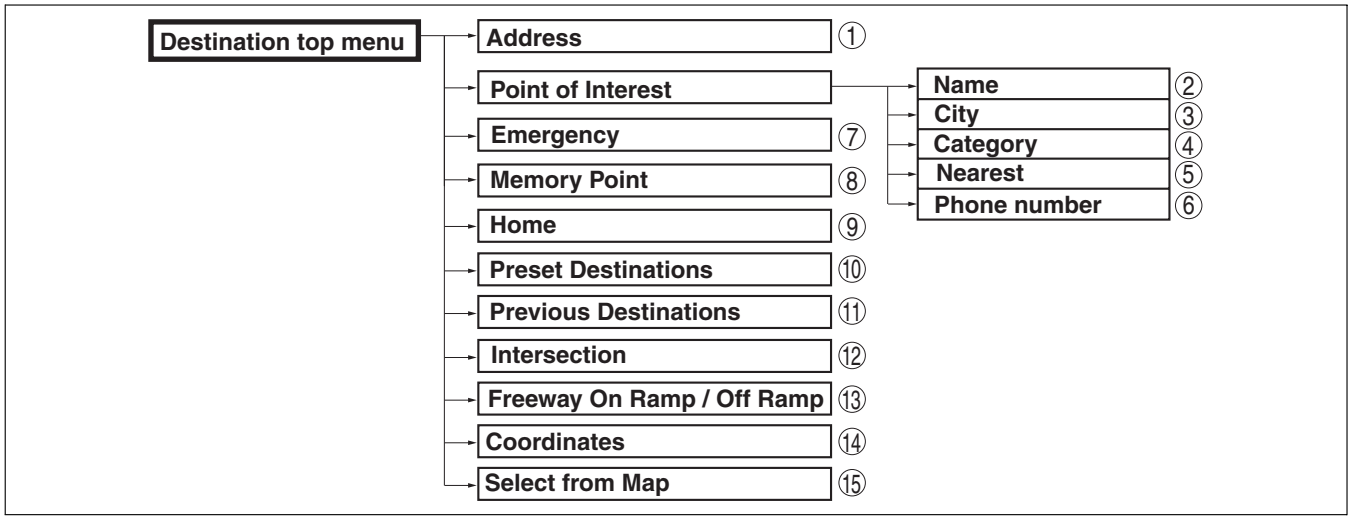

am5uun0000017

No.	Contents
1	Sets destination by inputting address.
2	Sets destination by inputting POI name.
3	Sets destination by selecting POI city, inputting city name and selecting POI.
4	Sets destination by selecting POI category, inputting target name and selecting POI.
5	Sets destination by inputting POI nearest facility.
6	Sets destination by selecting POI phone number, inputting phone number and selecting POI.
7	• Sets destination from a list of police station or hospital. (When stopped) • Sets destination to the nearest police station or hospital automatically. (When driving)
8	Sets destination from a list of points stored by the user.
9	Sets destination to home.
10	Sets destination to preset destination point.
11	Sets destination from a list of recent destinations.
12	Sets destination by selecting intersection name.
13	Sets destination by selecting Freeway On Ramp / Off Ramp.
14	Sets destination by inputting coordinates.
15	Sets destination by moving the crosshair cursor to the destination when in scroll map mode.

Voice Recognition Function

- Voice control can be carried out by simply pressing voice recognition/hands-free switch and speaking voice command into the microphone.

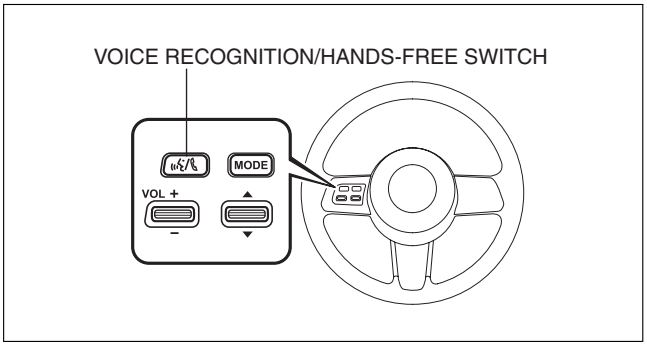

ar8uun00000014

CAR-NAVIGATION UNIT OUTLINE

id092000102200

- A car navigation unit has been adopted with built-in DVD-ROM driver and MP3 applicable CD changer.
- A touch panel has been adopted to the navigation system that can be operated by touching the on-screen icons.
- A voice guidance function has been adopted which can operate the car navigation system by voice.
- An on-board diagnostic system has been adopted.
- A diagnostic assist function has been adopted.

CAR-NAVIGATION UNIT CONSTRUCTION

id092000102300

Structural view

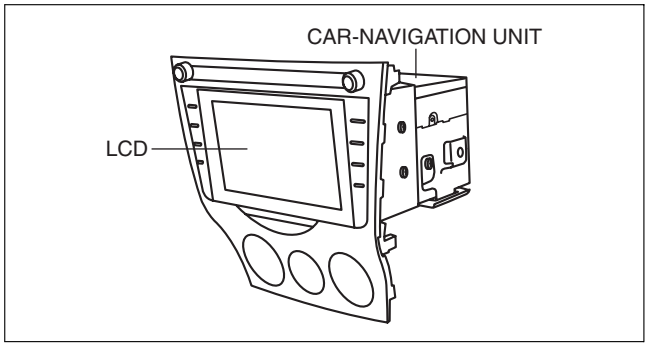

ar8uun00000015

Terminal Layout and Signal
Car-navigation unit connector

Terminal		Signal
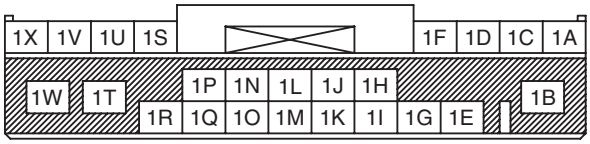	1A	Front door speaker LH (+)
	1B	B+
	1C	Front door speaker LH (–)
	1D	Front door speaker RH (+)
	1E	TNS (+)
	1F	Front door speaker RH (–)
	1G	Illumination (–)
	1H	Antenna control
	1I	Vehicle speed signal
	1J	AMP control
	1K	Parking brake signal
	1L	DIM cancel
	1M	Reverse signal
	1N	Steering switch 1
	1O	CAN (+)
	1P	Steering switch 2
	1Q	CAN (–)
	1R	ACC
	1S	Rear speaker LH (+)
	1T	AUDIO PILOT
	1U	Rear speaker LH (–)
	1V	Rear speaker RH (+)
	1W	Power ground
	1X	Rear speaker RH (–)
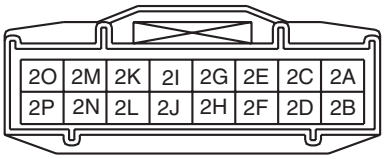	2A	Power ground
	2B	TEL (+)*1
	2C	Input signal RH (+)*2
	2D	—
	2E	Input signal LH (+)*2
	2F	—
	2G	Signal ground
	2H	—
	2I	—
	2J	TEL (–)*1
	2K	BUS (–)*3
	2L	BUS (+)*3
	2M	AUX CONT*2
	2N	—
	2O	ACC*3
	2P	B+*3
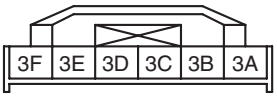	3A	Mic (+)
	3B	Mic (-)
	3C	Mic power
	3D	Ground
	3E	Mic sence
	3F	Steering switch 3

*1 : With H/F TEL system
*2 : Without SIRIUS satellite radio system
*3 : With SIRIUS satellite radio system

MICROPHONE CONSTRUCTION/OPERATION

id092000100700

- Located in the speaker grill.
- Recognize the voice entry.

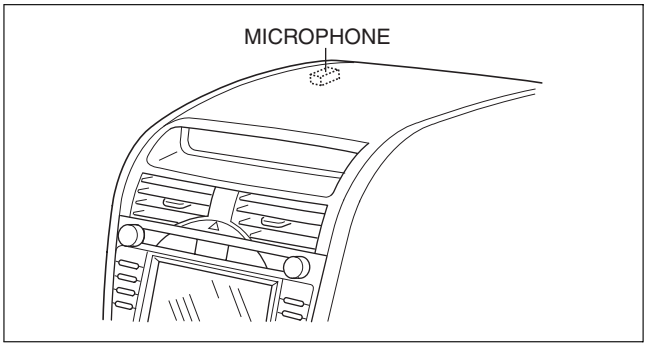

ar8uun00000012

Terminal Layout and Signals

Terminal		Signals
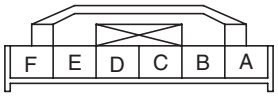	A	Mic (+)
	B	Mic (-)
	C	Mic power
	D	Ground
	E	Mic sense
	F	–

AUXILIARY JACK FUNCTION

id092000107400

- Connects commercially-available portable audio, and outputs the sound from the speaker via the audio unit (with audio system) or car-navigation unit (with car-navigation system).

AUXILIARY JACK CONSTRUCTION/OPERATION

id092000110000

- Auxiliary jack is installed to the rear console.
- An auxiliary jack is equipped on the upper part of the external input unit.

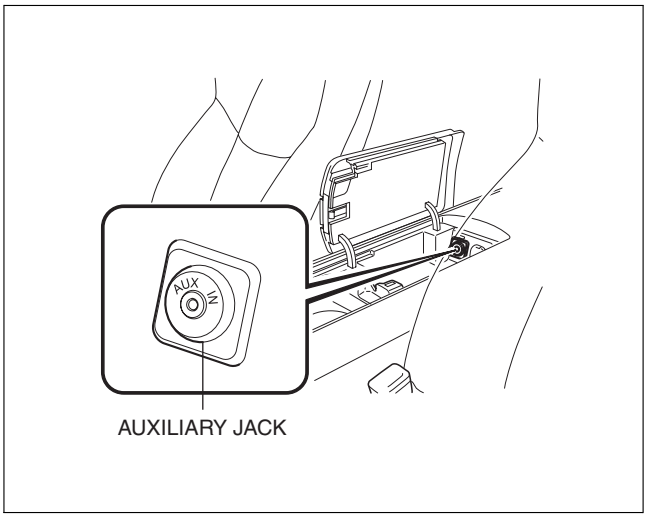

ar8uun00000016

Terminal		Signal name
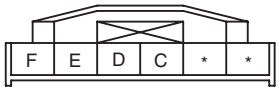	A	-
	B	-
	C	External sound input (LH)
	D	Audio ground
	E	External sound input (RH)
	F	AUX DET

HANDS-FREE TELEPHONE (HF/TEL) SYSTEM OUTLINE

id092000819800

- Calls can be made without operating the cellular phone*1 directly by using the voice recognition, which allows the user to concentrate on driving.
- If the cellular phone has been programmed, Bluetooth*2 is connected automatically each time the ignition switch is turned to the ACC or ON position.
- A voice recognition microphone and a speaker are used for conversation exchange.

*1 : A Bluetooth applicable cellular phone is required separately as the communication device.
*2 : Radio communication technology in which sound and data are transferred by connecting wireless cellular phones or personal computers.

HANDS-FREE TELEPHONE (HF/TEL) SYSTEM STRUCTURAL VIEW

id092000819700

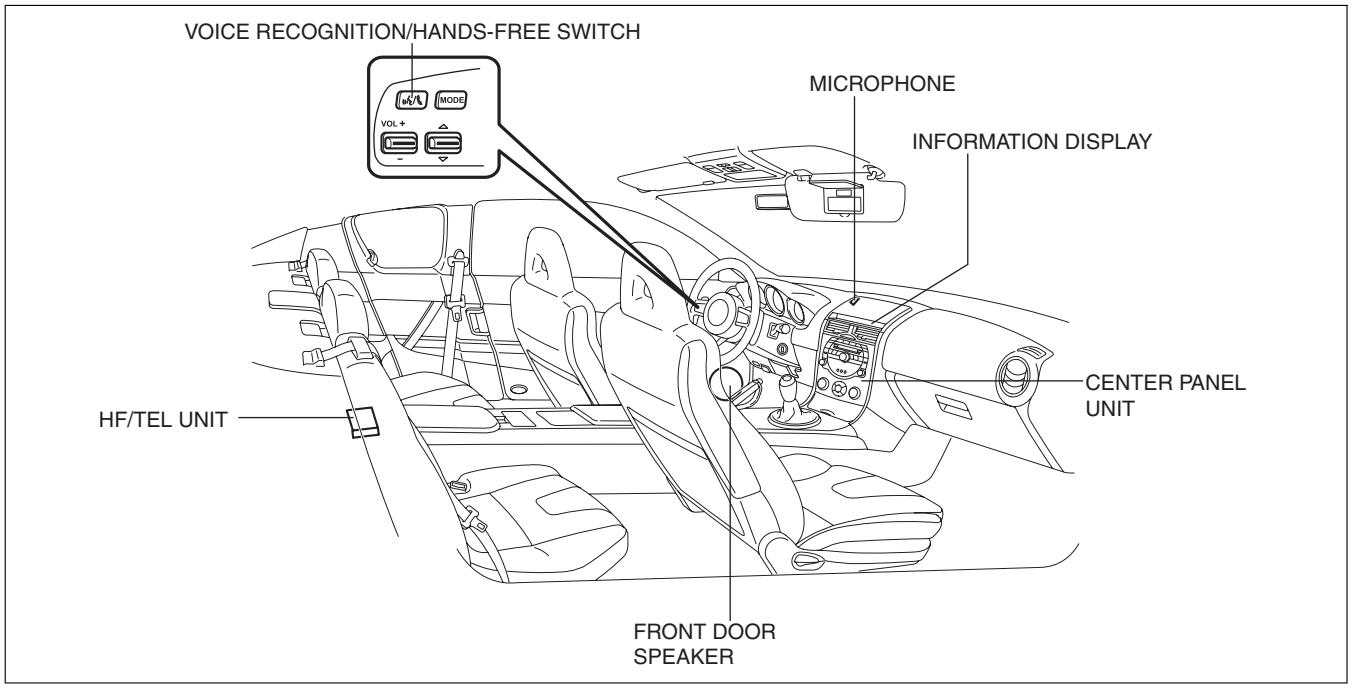

ar8uun00000010

Component part and Function

Item	Function
HF/TEL unit	• Possesses a voice recognition function to identify voice input from the microphone. • Outputs the call voice and voice guidance via the audio unit or audio amplifier. • Communicates with a cellular phone using Bluetooth. • Call-out, incoming call, and telephone number registration are controlled. The status signals are sent to the information display and audio unit via CAN.
Microphone	• The user voice is sent to the HF/TEL unit as electric signals.
Information display	• Each operation status of the HF/TEL unit is displayed by the character data.
Center panel unit	• Audio playback is canceled when the HF/TEL system is activated such as during an incoming call. • The call recipient voice and voice guidance are output to the speaker. • Bluetooth connection status, radio wave strength, roaming, and remaining battery level are displayed. (With car-navigation system) • The car-navigation system's voice recognition is cancelled while the HF/TEL system is activated. (With car-navigation system)
Front door speaker (driver side)	• The call recipient voice and voice guidance are output.
Voice recognition/hands-free switch	• Used for activating the HF/TEL system and initiating/terminating calls.

HANDS-FREE TELEPHONE (HF/TEL) SYSTEM BLOCK DIAGRAM

id092000819500

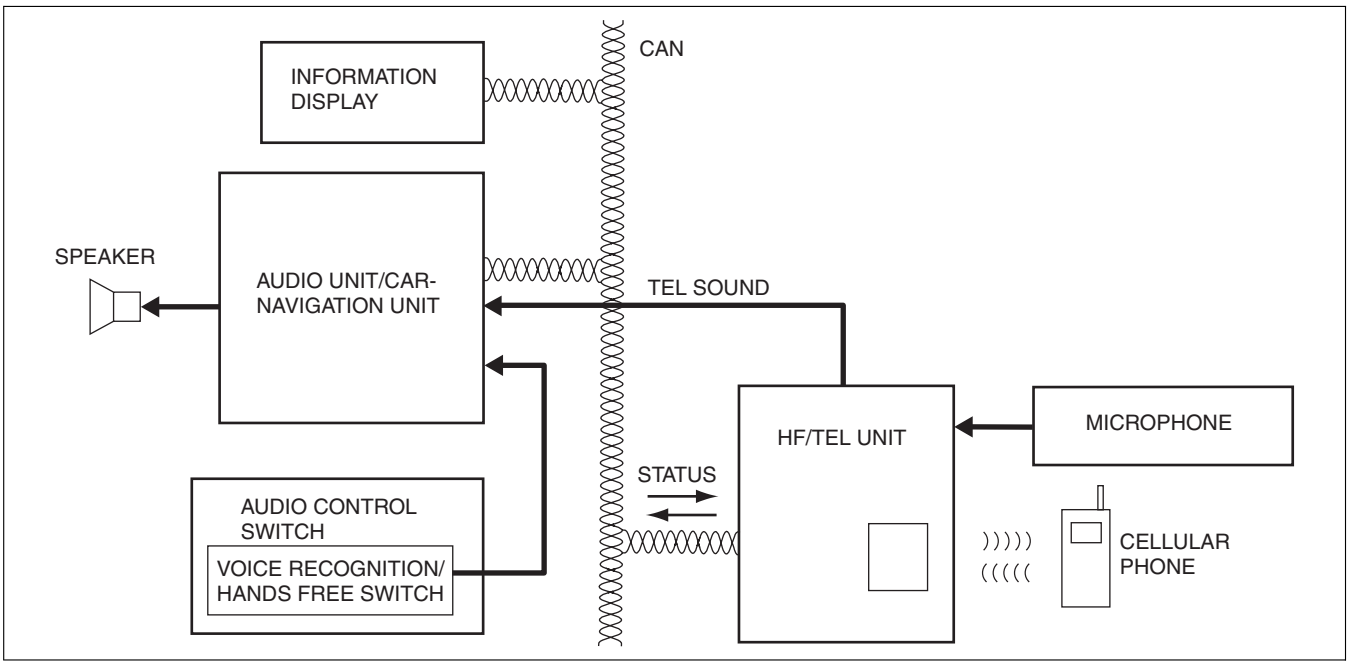

am5uun0000015

HANDS-FREE TELEPHONE (HF/TEL) SYSTEM CONSTRUCTION

id092000820100

Structural view

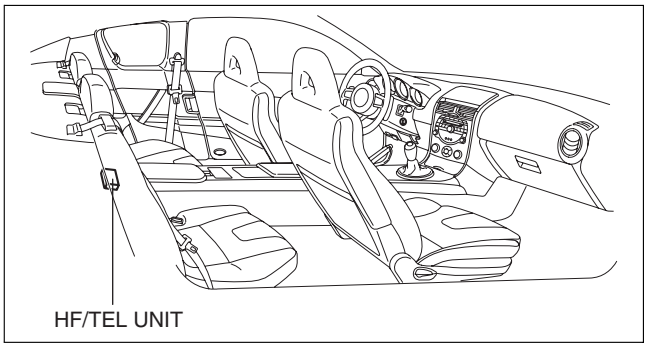

ar8uun00000011

Terminal Layout and Signal
HF/TEL unit

Terminal		Signal
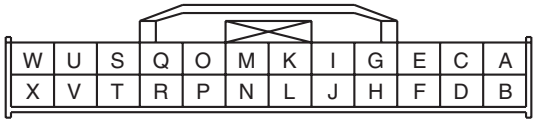	A	MIC output (+)
	B	MIC input (+)
	C	MIC output (-)
	D	MIC input (-)
	E	MIC output shield
	F	MIC input shield
	G	Audio output (+)
	H	Audio output (-)
	I	–
	J	MIC SENSE
	K	–
	L	Audio output shield
	M	–
	N	–
	O	–
	P	–
	Q	CAN (+)
	R	CAN (-)
	S	–
	T	GND
	U	MIC B+
	V	–
	W	ACC
	X	B+

HANDS-FREE TELEPHONE (HF/TEL) SYSTEM FUNCTION

id092000819600

- The following functions have been adopted.
- Operates by voice recognition/hands-free switch. Refer to the user's instructions for the operation method.

Function			Outline
Callout	Callout using telephone number		Call is made by the user calling out the telephone number.
	Callout using telephone book		Call is made by a calling out the name of a person whose telephone number has been registered in the telephone book in advance.
	Redialing		Redialing a telephone number previously dialed.
	Emergency calls		Calls the emergency “911” number.
Incoming call	Receiving calls		• Notifies the users that their cellular phone is being called immediately after the incoming call is detected. • Call is initiated.
	Call rejection		Calls are rejected.
Active call	Mute		Input from the microphone is interrupted during the call.
	Transfer		Switches a standard call using a cellular phone to a call using a hands-free phone.
	Multiple calls	Call interrupt	• An additional incoming call can be received during the current one. In this case, the first call is interrupted. • Call interrupt can be refused.
		Switching calls	• Press the voice recognition/hands-free switch to switch the call. — Voice recognition/hands-free switch (short press): The current call is put on hold. — Voice recognition/hands-free switch (long press): The current call is terminated.
Telephone book	Registration		• Registers telephone numbers to the telephone book in the HF/TEL unit. • 32 names can be programmed for each language. • The telephone numbers of four places (home, work, mobile, pager) can be programmed under one name.
	Edit		Correct/change the registered data.
	Clear		Clears a single registered data or collectively.
	View		Guides the registered data sequentially using voice.
Device pairing/ selection	Pairing		• A maximum of seven Bluetooth applicable cellular phones can be paired. • Connection priority ranking and four-digit PIN numbers must be input during pairing.
	Clear		Clear the device paired by each device or collectively.
	View		Guides the paired devices sequentially using voice.
Setting	Language setting		Language used for voice recognition, voice guidance, and display can be selected from three languages (English, French, and Spanish).
	Password setting/cancellation		• Password can be set. • If a password is set, the HF/TEL system does not operate until it is input.
	Confirmation prompt setting		• Confirms using voice guidance before executing the operation indicated by the user. • When it is set to OFF, confirmation guidance is skipped.
	Volume		Adjusts the call and voice guidance volumes.
Other	HF/TEL system stop		Stops the HF/TEL system operation.
	Voice training		• Learns features of the voice/pronunciation of the person making the call and improves voice recognition. • Voice training for up to one person can be done for each language.
	Help		• When “Help” is called out, the system switches to this function at any step. • Guides all executable voice commands.
Diagnosis system			The on-board diagnostic system has a self-diagnostic function and diagnostic assist function to help technicians locate malfunctions.

09-22 INSTRUMENTATION/DRIVER INFO.

INSTRUMENT CLUSTER OUTLINE 09-22–1
INSTRUMENT CLUSTER SPECIFICATIONS 09-22–1
INSTRUMENT CLUSTER STRUCTURAL VIEW 09-22–2
Meter and Gauge **09-22–2**
Warning and Indicator Light **09-22–2**
INSTRUMENT CLUSTER SYSTEM WIRING DIAGRAM 09-22–5
TACHOMETER CONTROL OUTLINE 09-22–7
TACHOMETER CONTROL CONSTRUCTION/OPERATION 09-22–7
Variable Red Zone Control **09-22–7**
INPUT/OUTPUT CHECK MODE OPERATION 09-22–8
Input circuit check **09-22–8**
INFORMATION DISPLAY FUNCTION 09-22–8
INFORMATION DISPLAY CONSTRUCTION/OPERATION 09-22–8
Display Function **09-22–8**
Clock function **09-22–9**
Input/output Check Function **09-22–9**

INSTRUMENT CLUSTER OUTLINE

id092200100200

- Variable red zone has been adopted that changes the red zone display of the engine speed according to the engine coolant temperature.

INSTRUMENT CLUSTER SPECIFICATIONS

id092200101100

Item		Specification
Warning/indicator alarms		
Sound frequency (Hz)		1,800—2,600
Lights-on reminder warning alarm	Sound frequency (Hz)	1,900
	Sound cycle	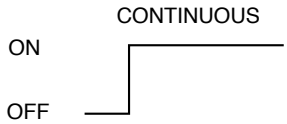
Key reminder warning alarm	Sound frequency (Hz)	1,800
	Sound cycle	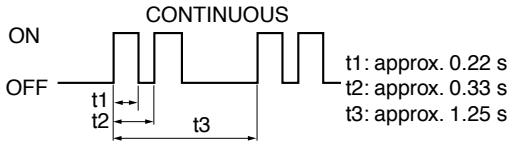
Oil level warning alarm	Sound frequency (Hz)	2,000
	Sound cycle	
Tire pressure warning alarm	Sound frequency (Hz)	2,600
	Sound cycle	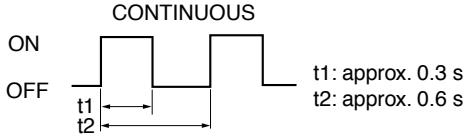
Over-revolution warning alarm	Sound frequency (Hz)	2,600
	Sound cycle	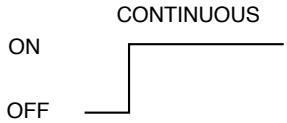

INSTRUMENT CLUSTER STRUCTURAL VIEW

id092200101200

Meter and Gauge

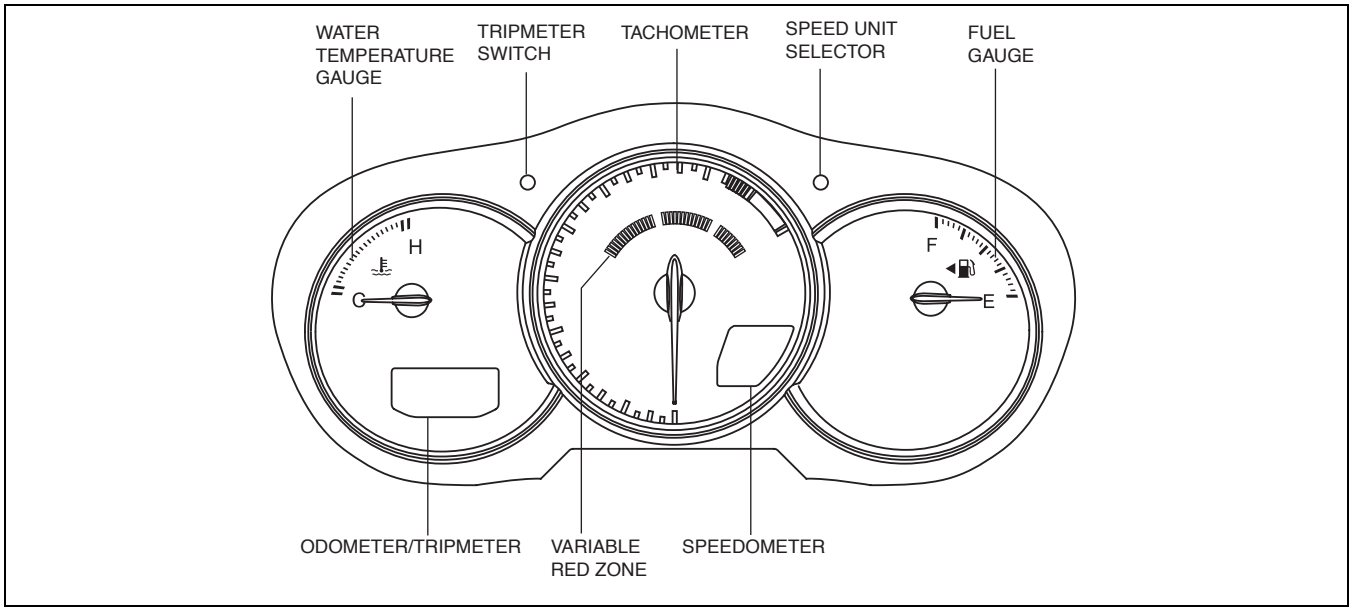

ar8uun00000222

Warning and Indicator Light

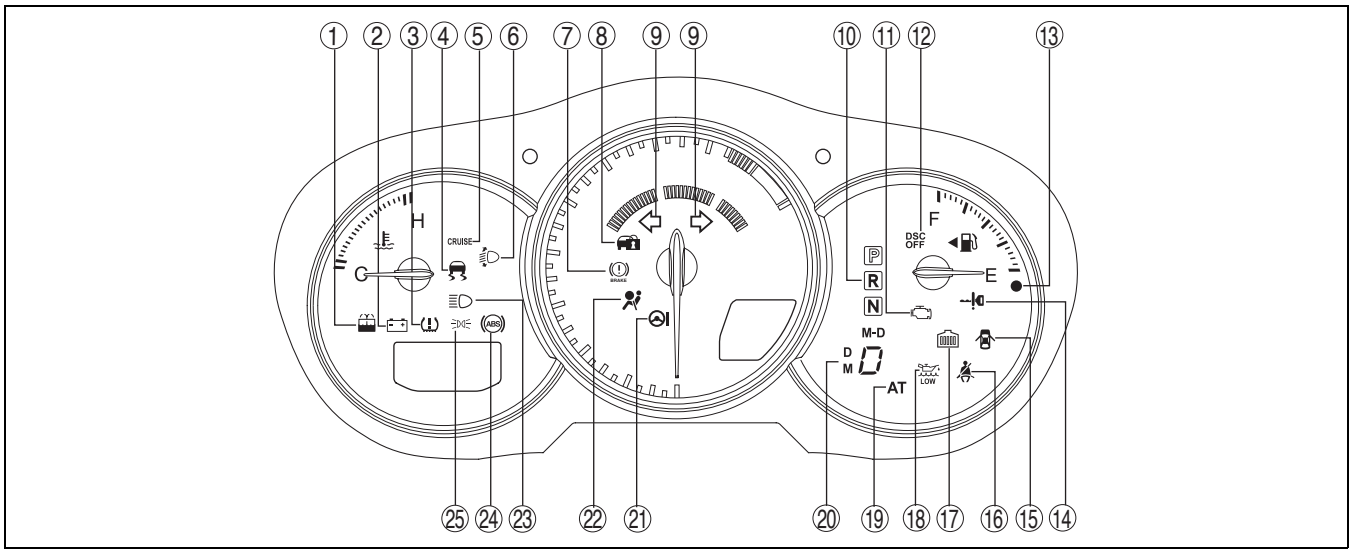

ar8uun00000217

×: Applicable

No.	Warning and indicator light	Input signal source	CAN system	Description	Note
1	Washer fluid level warning light	Washer fluid level sensor	—	When the washer fluid-level is low, the washer fluid level warning light illuminates. (See BODY & ACCESSORIES, WIPER/WASHER SYSTEM.)	With washer fluid level sensor
2	Generator warning light	PCM	×	Illuminates if the generator output is not normal. (See ENGINE, CHARGING SYSTEM.)	—

No.	Warning and indicator light	Input signal source	CAN system	Description	Note
3	Tire pressure monitoring system (TPMS) warning light	Keyless control module	—	If the TPMS system is malfunctioning or the tire pressure is abnormal, the tire pressure warning light remains illuminated. (See 02-12-6 TIRE PRESSURE MONITORING SYSTEM (TPMS) WARNING LIGHT CONSTRUCTION.)	With TPMS, advanced keyless and start system
		Keyless receiver	—		With TPMS, keyless entry system
4	DSC indicator light	DSC HU/CM	×	• If the DSC system is malfunctioning, the DSC indicator light remains illuminated. (See 04-02-2 ON-BOARD DIAGNOSTIC SYSTEM FUNCTION [DYNAMIC STABILITY CONTROL (DSC)].) • When the DSC or TCS is operating, the DSC indicator light flashes. (See 04-02-2 ON-BOARD DIAGNOSTIC SYSTEM FUNCTION [DYNAMIC STABILITY CONTROL (DSC)].)	With DSC
5	Cruise main indicator light (amber) Cruise set indicator light (green)	PCM	×	Illuminates if the cruise control system is in control status. (See 01-20-1 CRUISE CONTROL SYSTEM OUTLINE [13B-MSP].)	With cruise control system
6	Headlight auto leveling warning light	Auto leveling control module	—	The headlight auto leveling system warning light illuminates if a malfunction in the auto leveling system is detected. (See BODY & ACCESSORIES, LIGHTING SYSTEMS.)	With headlight auto leveling system
7	Brake system warning light	ABS HU/CM	×	If the ABS system is malfunctioning, the brake system warning light remains illuminated. (See BRAKE, ON-BOARD DIAGNOSTIC SYSTEM.)	With ABS
		DSC HU/CM	×	If the DSC system is malfunctioning, the brake system warning light remains illuminated. (See 04-02-2 ON-BOARD DIAGNOSTIC SYSTEM FUNCTION [DYNAMIC STABILITY CONTROL (DSC)].)	With DSC
		Brake fluid-level sensor	—	Illuminates when engine oil level is the specified value or less.	—
		Parking brake switch	—	When the parking brake is operating, the brake system warning light illuminates.	
8	Security light	Keyless control module	—	Illuminates or flashes when immobilizer system has malfunction.	With advanced keyless and start system
					With keyless entry system
9	Turn indicator light	• Light switch • Hazard warning switch	—	• Flashes when ignition switch is ON position during turn switch operation. • Flashes when hazard warning switch is on.	—
10	Selector indicator light	TCM	×	The selector indicator light displays the selector lever position. (See TRANSMISSION/TRANSAXLE, AUTOMATIC TRANSMISSION [SJ6A-EL].)	AT
11	MIL	PCM	×	Illuminates if a malfunction occurs in the engine control system and the automatic transmission control system. (See ENGINE, ON-BOARD DIAGNOSTIC.)	—

No.	Warning and indicator light	Input signal source	CAN system	Description	Note
12	DSC OFF indicator light	DSC HU/CM	×	• If the DSC system is malfunctioning, the DSC OFF light remains flashed. (See 04-02-2 ON-BOARD DIAGNOSTIC SYSTEM FUNCTION [DYNAMIC STABILITY CONTROL (DSC)].) • When the DSC OFF switch is pressed to disable, the DSC OFF light illuminates. (See BRAKE, ON-BOARD DIAGNOSTIC SYSTEM.)	With DSC
13	Fuel-level warning light	Fuel gauge sender unit	—	When the remaining fuel amount in the fuel tank is low, the fuel-level warning light illuminates.	—
14	Keyless indicator light (green)	Keyless control module	×	Illuminates when start knob is pressed.	With advanced keyless and start system
	Keyless warning light (red)			Illuminates or flashes when keyless control module has malfunction.	
15	Door ajar warning light	Door switch, Trunk lid opener switch	—	Illuminates when door or trunk lid is open.	—
16	Seat belt warning light	SAS control module	—	Warns the driver that the seat belt (driver side or passenger side) is unfastened	—
17	Coolant level warning light	PCM	×	Illuminates when engine coolant level is the specified value or less.	—
18	Oil level warning light	PCM	×	• Illuminates when engine oil level is the specified value or less. • Flashes when a DTC is recorded in the PCM after a malfunction in the oil supply control occurs.	—
19	AT warning light	TCM	×	The AT warning light illuminates to alert the driver of a malfunction in the automatic transmission. (See TRANSMISSION/TRANSAXLE, AUTOMATIC TRANSMISSION [SJ6A-EL].)	AT
20	Gear position indicator light	TCM	×	The gear position indicator light displays the gear position when in the manual mode. (See TRANSMISSION/TRANSAXLE, AUTOMATIC TRANSMISSION [SJ6A-EL].)	AT
21	Electric power steering (EPS) warning light	EPS control module	×	Illuminates when EPS system has malfunction. (See STEERING, ON-BOARD DIAGNOSTIC.)	—
22	Air bag system warning light	SAS control module	—	Illuminates or flashes when SRS air bag system has malfunction. (See RESTRAINTS, ON-BOARD DIAGNOSTIC.)	—
23	High-beam indicator light	Light switch	—	When the headlight (high-beam) illuminates, the high-beam indicator light illuminates.	—
24	ABS warning light	ABS HU/CM, DSC HU/CM	×	If the ABS/DSC system is malfunctioning, the ABS warning light remains illuminated. (See BRAKE, ON-BOARD DIAGNOSTIC SYSTEM.) (See 04-02-2 ON-BOARD DIAGNOSTIC SYSTEM FUNCTION [DYNAMIC STABILITY CONTROL (DSC)].)	—
25	TNS indicator light	TNS relay	—	When the TNS illuminates, the TNS indicator light illuminates.	—

INSTRUMENT CLUSTER SYSTEM WIRING DIAGRAM

id092200101300

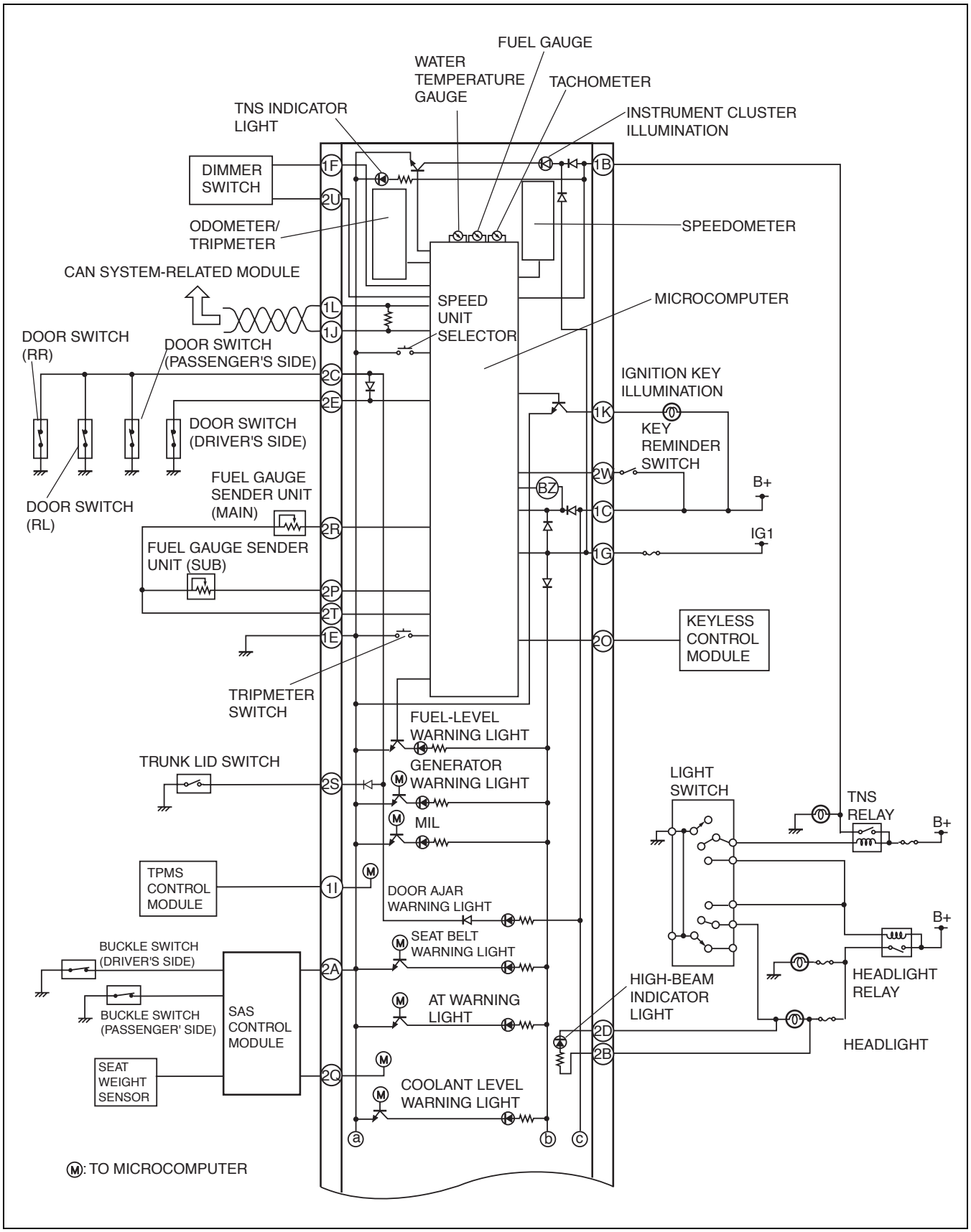

ar8uun00000157

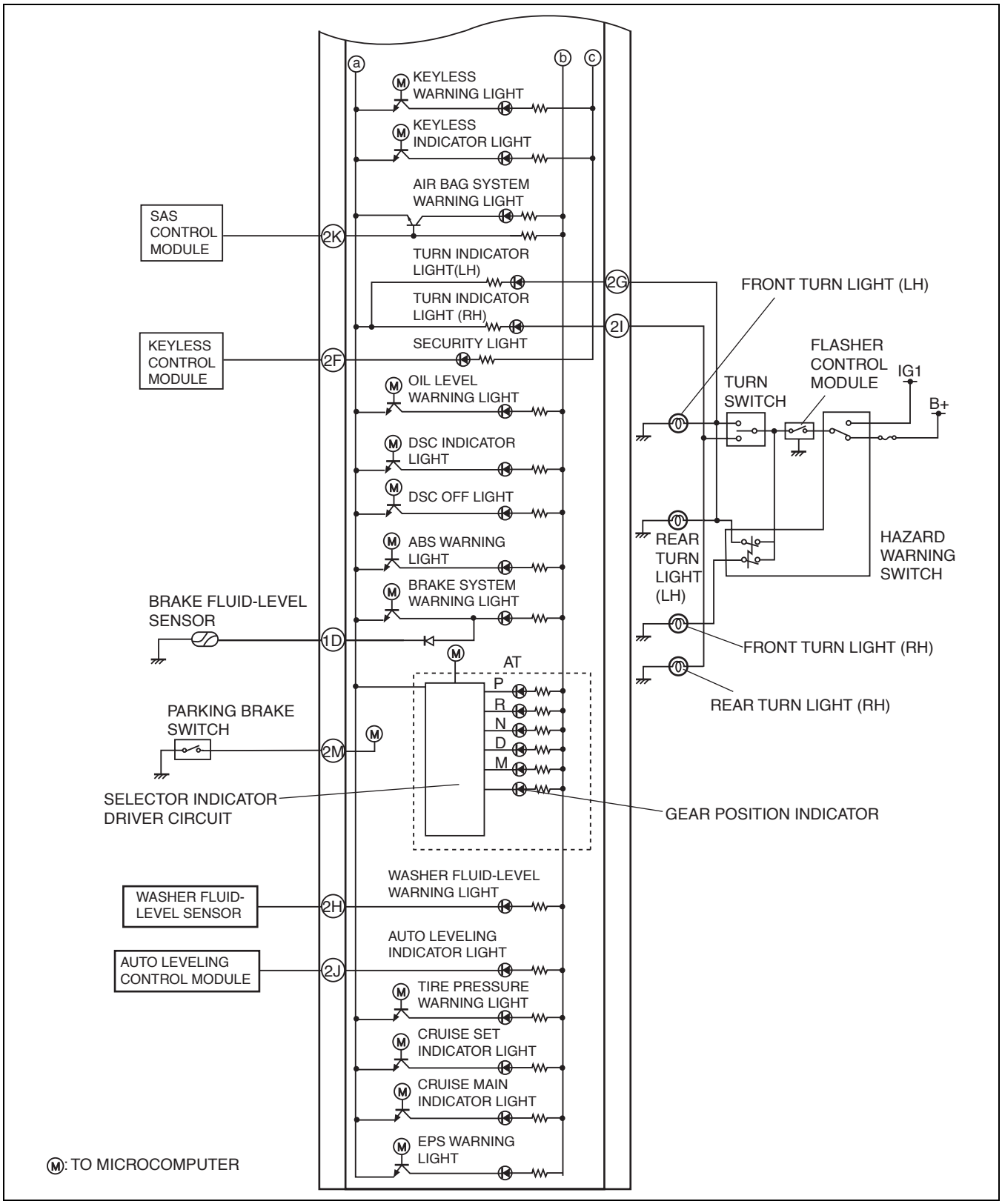

ar8uun00000158

TACHOMETER CONTROL OUTLINE

id092200102300

- Variable red zone has been adopted that changes the red zone display of the engine speed according to the engine coolant temperature.

TACHOMETER CONTROL CONSTRUCTION/OPERATION

id092200102200

Variable Red Zone Control

- The PCM determines the red zone of the engine speed based on the engine coolant temperature signal from the ECT sensor, and outputs a variable red zone display request signal to the instrument cluster via CAN system.

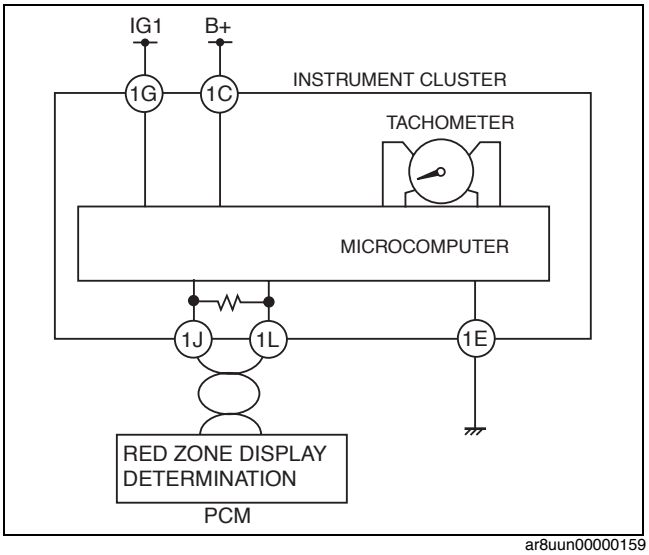

ar8uun00000159

- The instrument cluster switches the variable red zone display in the tachometer based on the red zone display request signal input from the PCM.
- Variable red zone has three display patterns that are switched according to the engine coolant temperature.

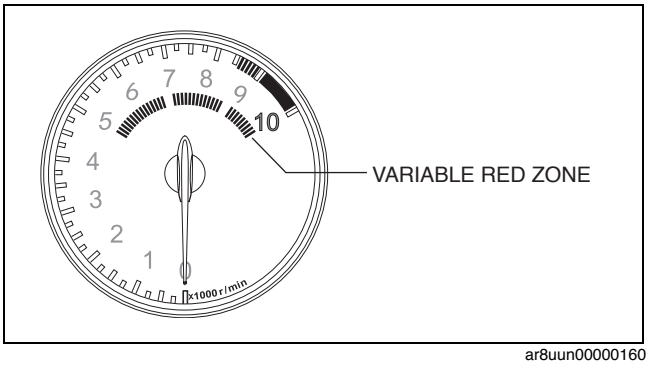

ar8uun00000160

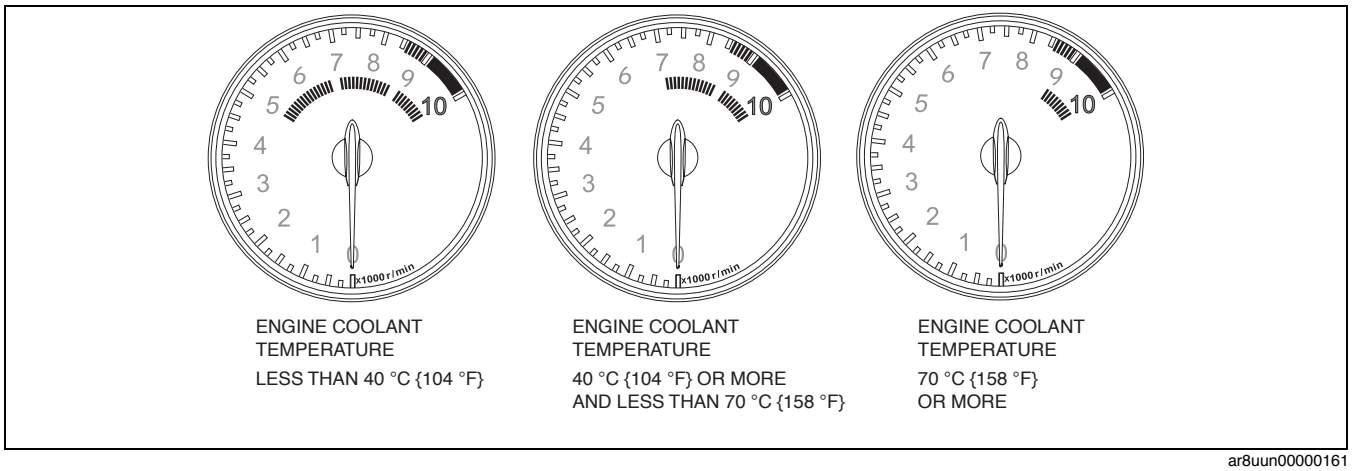

ar8uun00000161

Engine coolant temperature	Range of variable red zone	
	5MT, 6AT	6MT
Less than 40 °C {104 °F}	5,000 rpm	5,000 rpm
40 °C {104 °F} or more and less than 70°C {158 °F}	6,500 rpm	7,000 rpm
70 °C {158 °F} or more	7,500 rpm	9,000 rpm

INPUT/OUTPUT CHECK MODE OPERATION

id092200100900

Input circuit check

- When the parts listed in the chart are operated and output a signal to the instrument cluster, the built in microcomputer judges the quality of the input circuit based on that signal.

Check code	Parts sending input signal
01	Buckle switch (Driver side)
55	Dimmer cancel switch
58	Buckle switch (Passenger side)

INFORMATION DISPLAY FUNCTION

id092200100500

- The information display has the following functions:
  — Input/output check function

INFORMATION DISPLAY CONSTRUCTION/OPERATION

id092200100400

Display Function

- Displays information for the audio system (such as volume and frequency) and air conditioner system (such as air flow volume, set temperature and mode) based on the signals from the center panel unit.

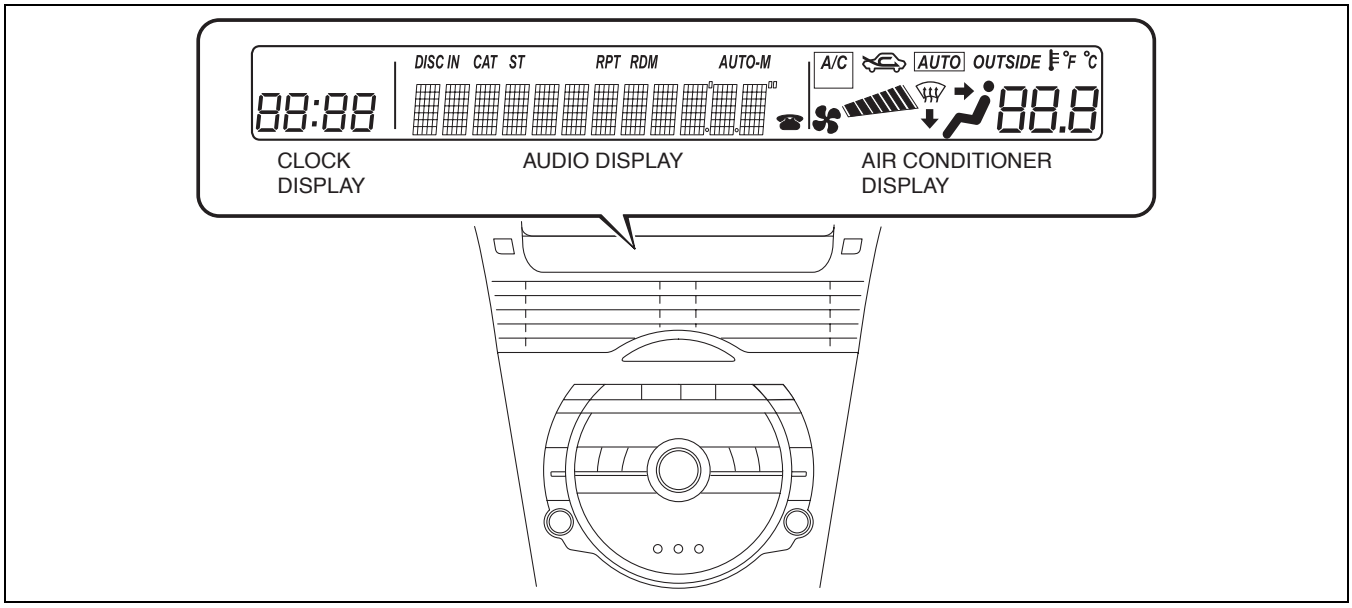

ar8uun00000162

Clock function

- A clock is integrated.
- Time can be adjusted with the buttons on the center panel module.

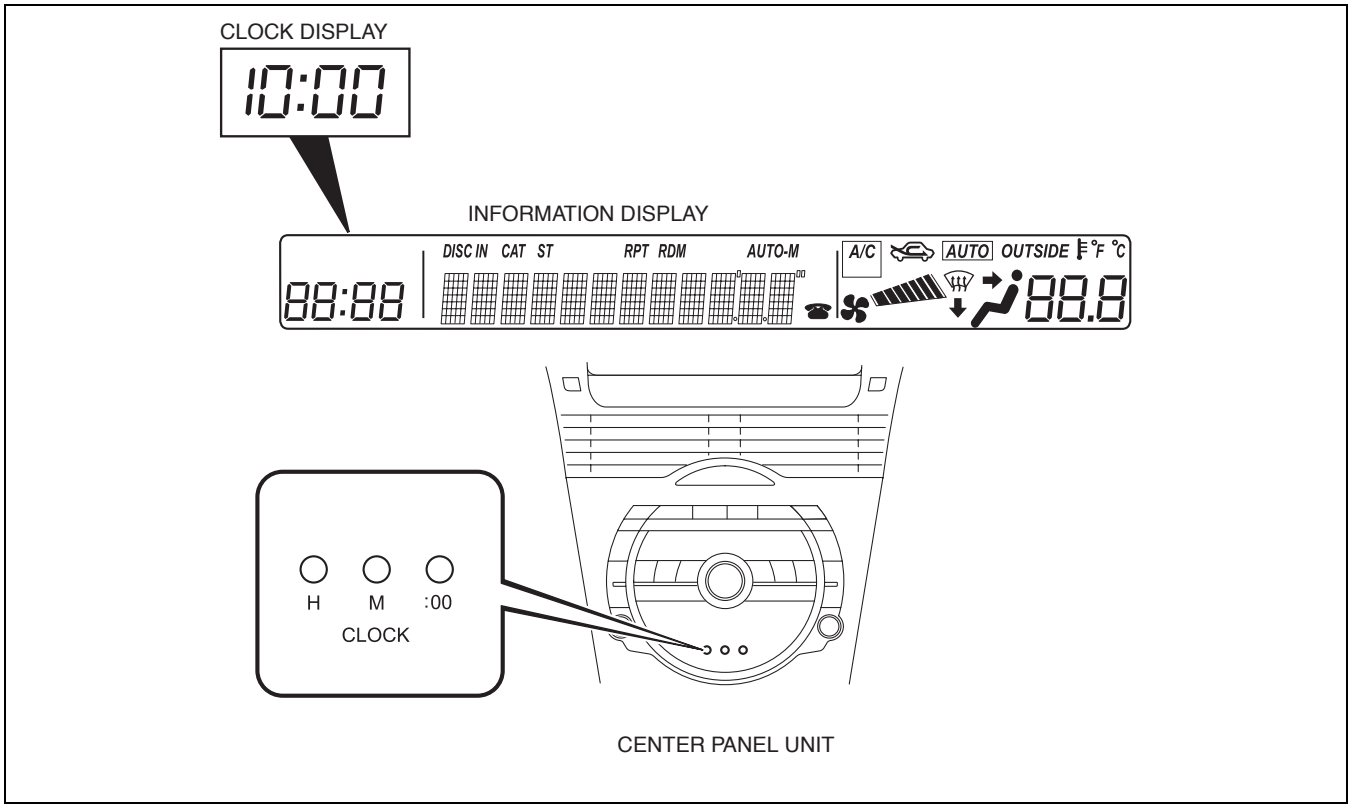

ar8uun00000163

Input/output Check Function

- An input/output check function has been adopted which performs signal input to the display and examines the LCD according to the micro-computer built into the information display.

Check code

- When the signal output part indicated in the table below is activated, the micro-computer performs self-diagnosis of the signal input to the information display. Also, inspection of segments and dots is possible by illuminating the entire LCD.

Check code	Signal output part	Malfunction location
01	Information display	CAN system communication error
02	• Audio unit • Climate control module	Communication error to signal output part
04	Light switch (TNS position)	10.5
06	Ignition switch	Ignition switch
07	Dimmer cancel switch	Dimmer cancel switch
—	LCD	LCD

Check code display

- The check code and inspection display are displayed in the LCD clock and audio display areas.

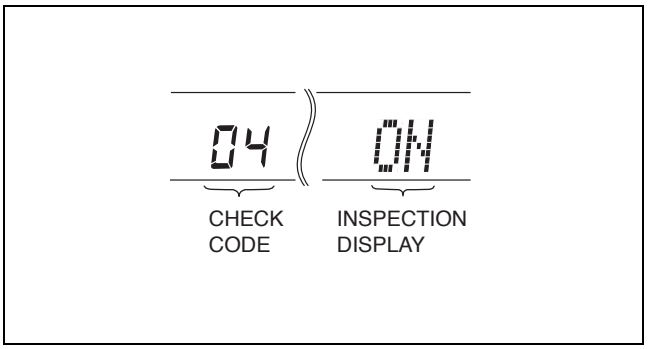

ar8uun00000164

09-40 CONTROL SYSTEM

CONTROL SYSTEM OUTLINE 09-40–1
CONTROL SYSTEM STRUCTURAL VIEW 09-40–2
CONTROLLER AREA NETWORK (CAN) SYSTEM OUTLINE 09-40–2
CONTROLLER AREA NETWORK (CAN) SYSTEM WIRING DIAGRAM 09-40–3
CONTROLLER AREA NETWORK (CAN) SYSTEM CONSTRUCTION/OPERATION 09-40–4
CAN system **09-40–4**
Time-Division Multiplexing **09-40–4**
MECHANISM OF CAN (CONTROLLER AREA NETWORK) SYSTEM-RELATED MODULE STRUCTURE 09-40–6
CONTROLLER AREA NETWORK (CAN) SYSTEM SIGNAL-CHART 09-40–7
TWISTED PAIR CONSTRUCTION 09-40–9
ON-BOARD DIAGNOSTIC OUTLINE [CAN (CONTROLLER AREA NETWORK)] 09-40–9
ON-BOARD DIAGNOSTIC FUNCTION [CAN (CONTROLLER AREA NETWORK)] 09-40–10
Block Diagram **09-40–10**
On-Board Diagnostic Function **09-40–11**
Narrowing down malfunction locations **09-40–12**

CONTROL SYSTEM OUTLINE

id094000103000

- A CAN system (Control Area Network) has been adopted in which multiple signals are transmitted over a single communication path as a result of wiring harness simplification.
- Twisted-pair wiring is used for connections between the following modules.
  — PCM
  — EPS control module
  — ABS HU/CM (with ABS)
  — DSC HU/CM (with DSC)
  — TCM (AT)
  — Keyless control module
  — Steering angle sensor (with DSC)
  — Instrument cluster
  — Information display
  — Audio unit (without car-navigation system)
  — Car-navigation unit (with car-navigation system)
  — SIRIUS satellite radio unit (with SIRIUS satellite radio system)
  — Hands-free telephone unit (with HF/TEL system)
  — Climate control unit
- With an on-board diagnostic function included for each multiplex module, display of DTCs using the Mazda Modular Diagnostic System (M-MDS) has improved serviceability.

CONTROL SYSTEM STRUCTURAL VIEW

id094000103100

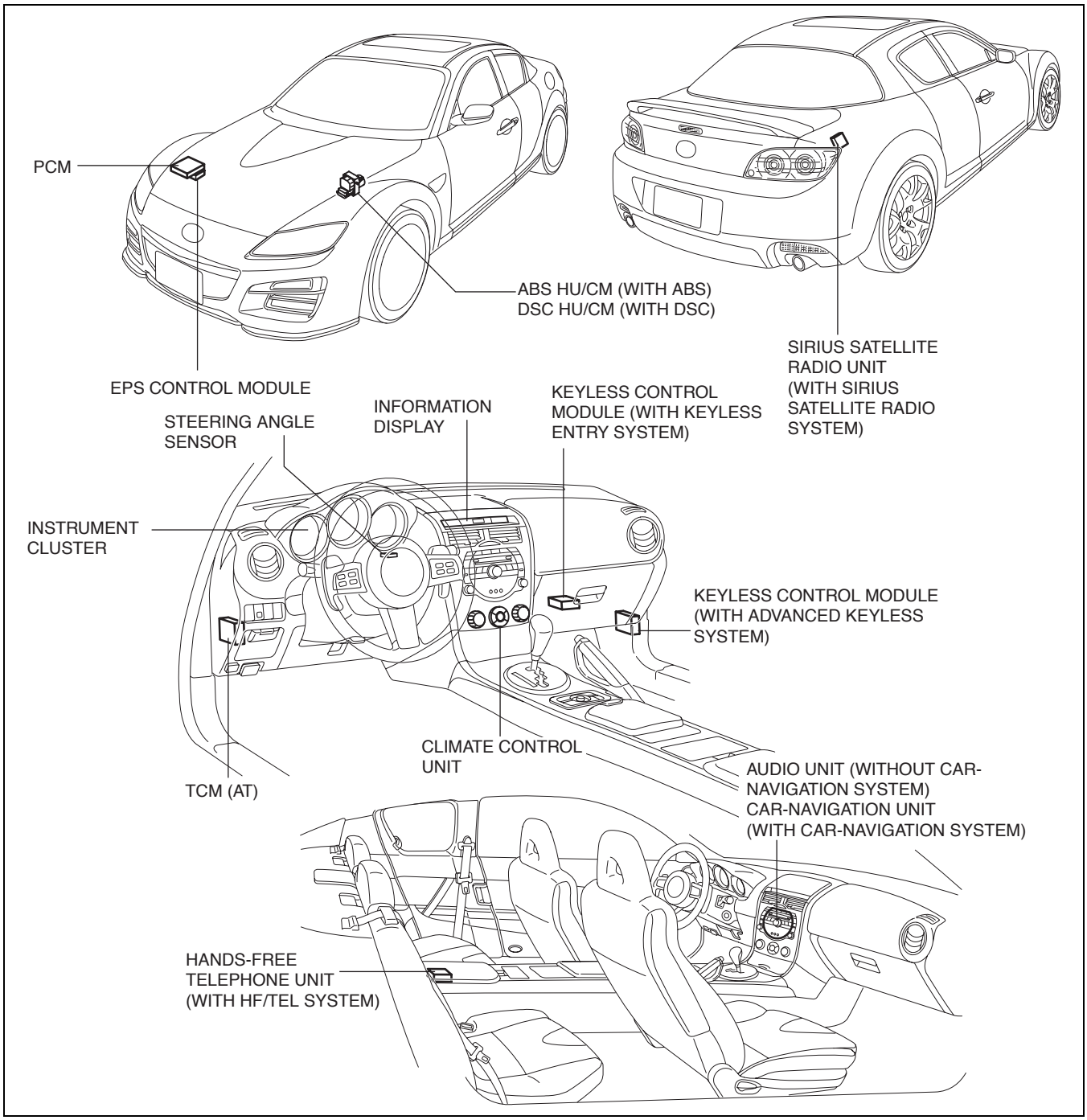

ar8uun00000088

CONTROLLER AREA NETWORK (CAN) SYSTEM OUTLINE

id094000103200

- The CAN system is a network which utilizes time-division multiplexing to enable transmission of multiple signals over a single communication path from related modules.
- The CAN system utilizes twisted pair wiring harnesses for transmission.

CONTROLLER AREA NETWORK (CAN) SYSTEM WIRING DIAGRAM

id094000103400

HS-CAN

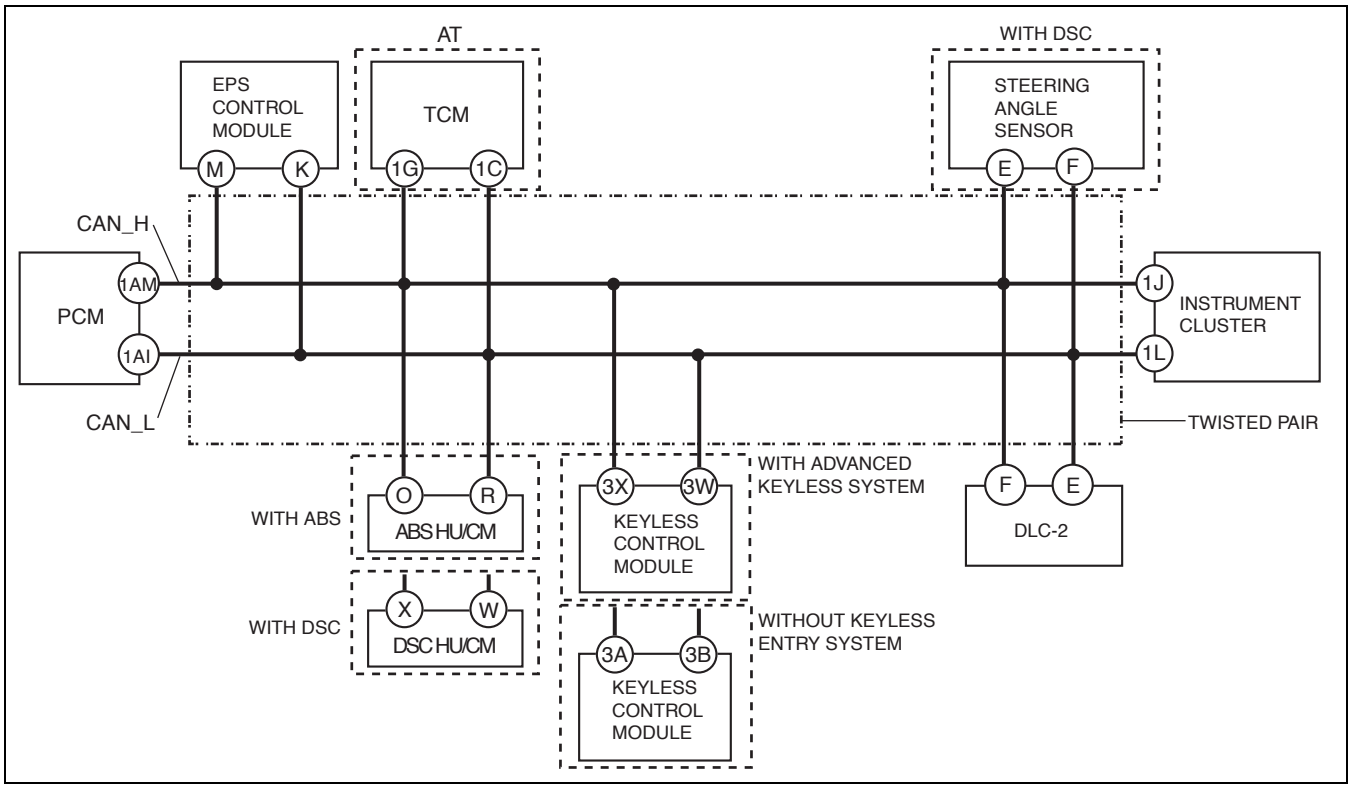

ar8uun00000315

MS-CAN

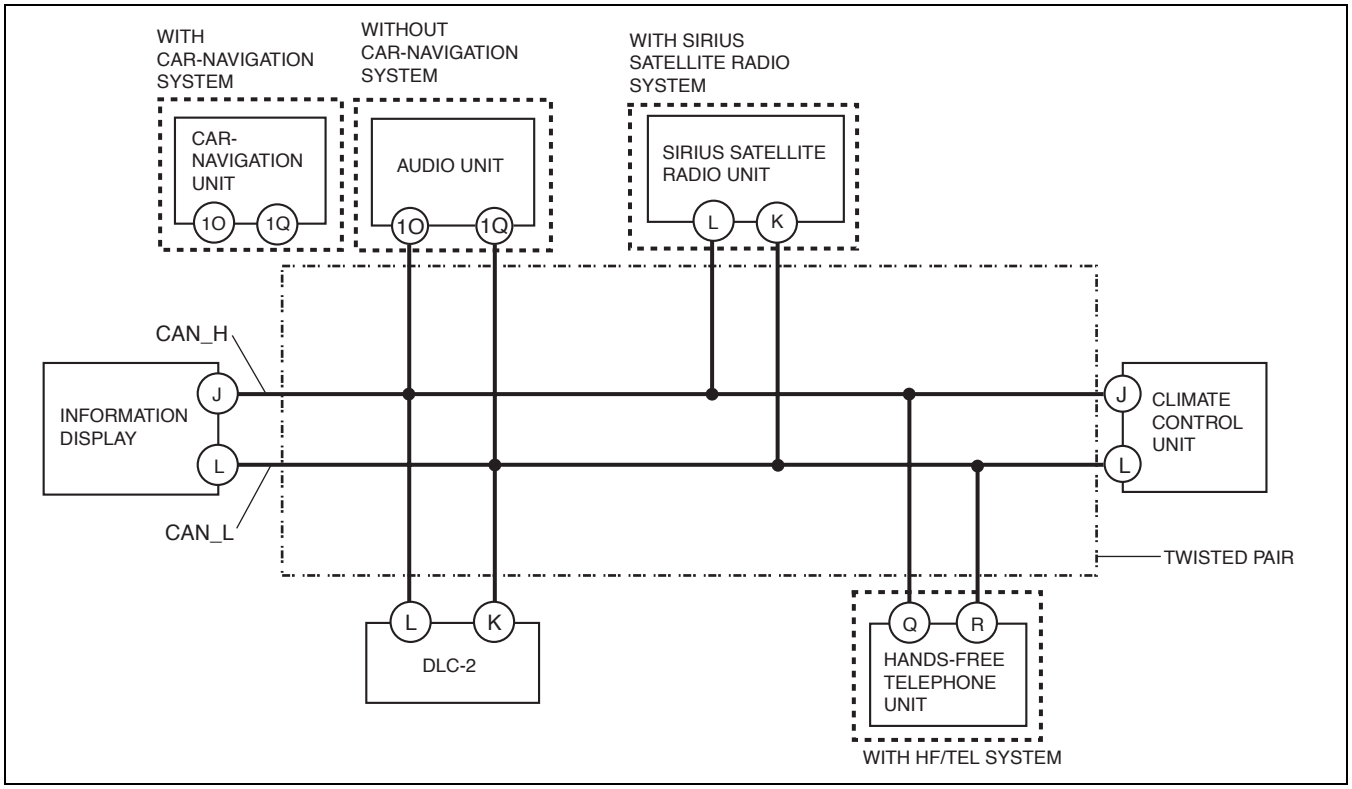

ar8uun00000316

CONTROLLER AREA NETWORK (CAN) SYSTEM CONSTRUCTION/OPERATION

id094000103500

CAN system

- Transmission of information to and from modules is done using time-division multiplexing.
- The signals transmitted from a single module are communicated to all other modules via the twisted pair wiring harnesses. When each module receives a relevant signal, output is performed based on the signal.

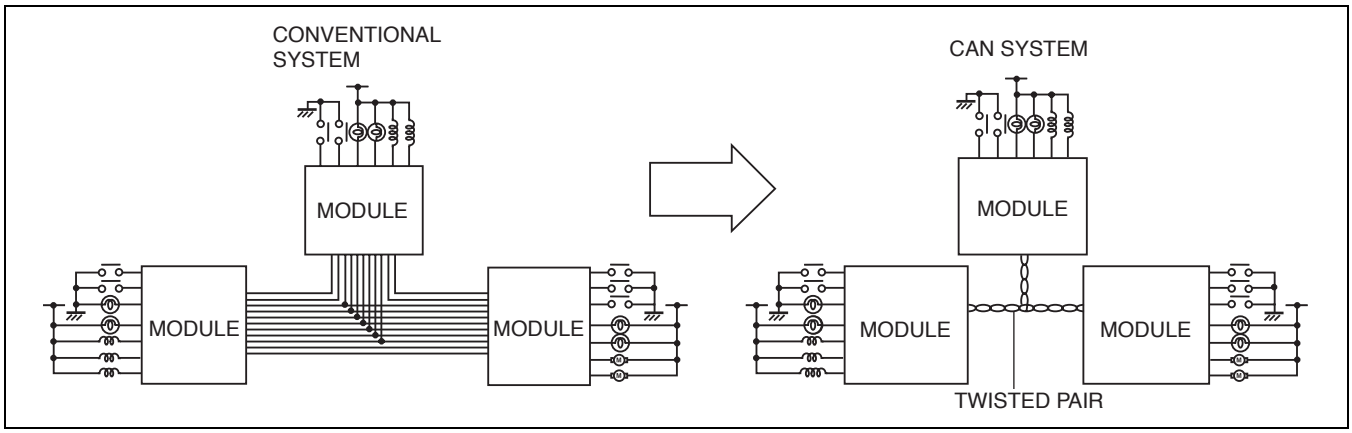

ar8uun00000312

Time-Division Multiplexing

- Control signals are converted to data composed of 0s and 1s, and transmitted.
- By transmitting multiple signals which are divided by time, more information can be transmitted using fewer wiring harnesses.

Transmission between conventional modules

- To illuminate 5 individual bulbs, 5 separate communication paths from switch to bulb are needed.
- To illuminate bulbs B and C, it is necessary to connect switches B and C to pass current along the communication paths.

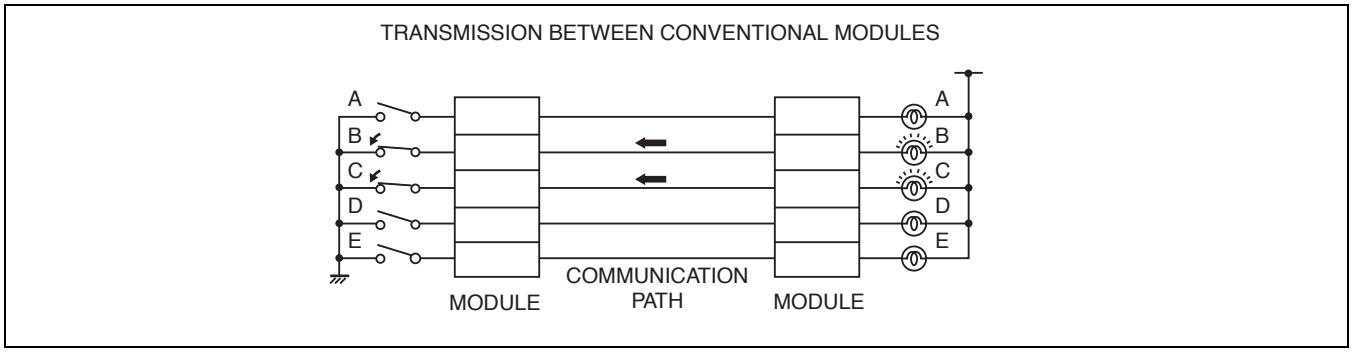

ar8uun00000319

Transmission between modules based on time-division multiplexing

- To illuminate 5 individual bulbs, only one communication path from switch to bulb is necessary.
- To illuminate B and C bulbs, the transmitting module combines B and C into a single data, converts data A, D, and E to 0, and then transmits. When the signal is received by the module, bulbs B and C with data signals conferred to 1 are illuminated.

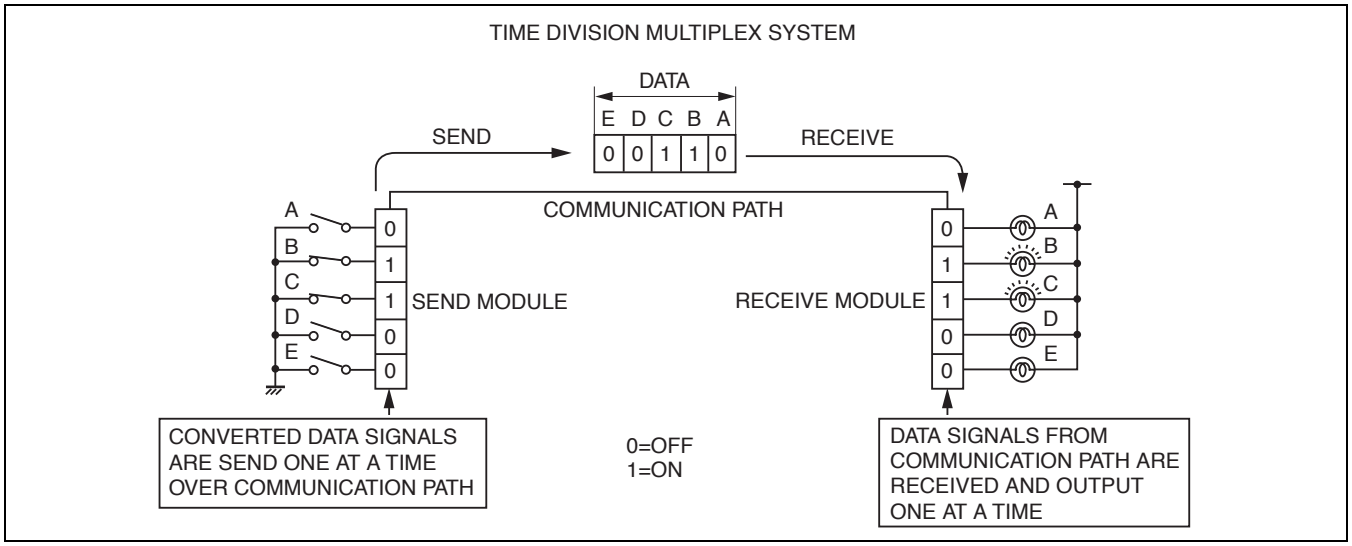

ar8uun00000320

MECHANISM OF CAN (CONTROLLER AREA NETWORK) SYSTEM-RELATED MODULE STRUCTURE

id094000103700

- The CAN system related module consists of a power supply circuit, CPU, input/output interface, and twisted pair wiring harnesses.
- With the utilization of twisted pair wiring harnesses, the now-redundant input/output parts integrated in the conventional modules have been simplified.
- The CAN system related module is completely controlled by the CPU.
- The CPU consists of a multiplex block and computation processing block.
- Each component part has the following functions:

Component		Function
Electrical circuit		Supplies power to the CPU and surrounding area and input/output interface.
CPU	Computation processing block	When transmission is necessary, transmission data is written to the multiplex block. In addition, when a transmission data write command is received from the multiplex block, the received data is written.
	Multiplex block	Receives data from twisted pair wiring harnesses and sends it to the computation processing block. Sends data written by the computation processing block via the twisted pair wiring harnesses.
Input interface		Changes the electrical properties of information, such as switch information, to information which can be input to the CPU.
Output interface		Changes the electrical properties of the CPU output in order to drive devices such as motors.

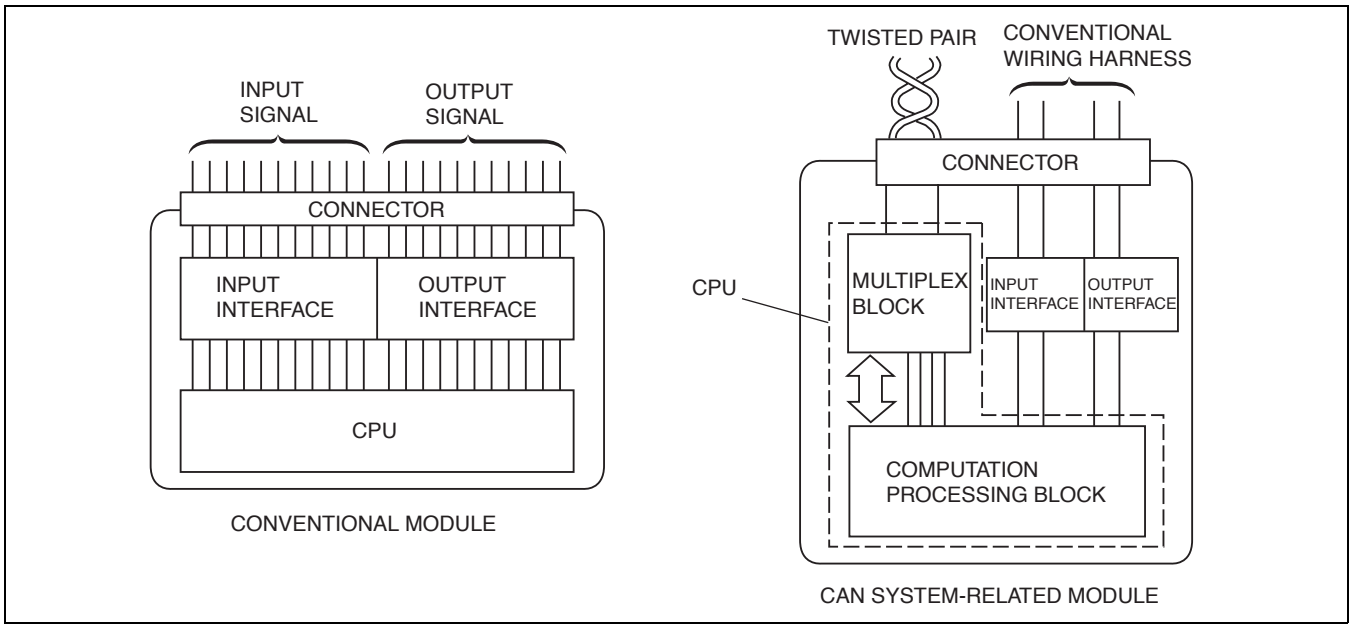

ar8uun00000313

CONTROLLER AREA NETWORK (CAN) SYSTEM SIGNAL-CHART

id094000103800

- The instrument cluster controls the TPMS.
- Signals transmitted using the CAN system are as follows:

HS-CAN

OUT: Output (sends signal)
IN: Input (receives signal)

Signal	Multiplex module							
	PCM	EPS control module	TCM (AT)	ABS HU/CM (with ABS) / DSC HU/CM (with DSC)	Keyless control module	TPMS	Steering angle sensor (with DSC)	Instrument cluster
Immobilizer system related information	OUT	—	—	—	IN	—	—	—
	IN	—	—	—	OUT	—	—	—
Engine speed	OUT	IN	IN	— / IN	IN	—	—	IN
Engine status	OUT	—	IN	—	—	—	—	—
Over-revolution warning alarm status	OUT	—	—	—	—	—	—	IN
Variable red zone	OUT	—	—	—	—	—	—	IN
Vehicle speed	OUT	IN	—	—	—	IN	—	IN
	IN	—	OUT	—	—	—	—	—
Throttle valve opening angle	OUT	—	IN	— / IN	—	—	—	—
Engine coolant temperature	OUT	—	IN	—	—	—	—	IN
Engine torque	OUT	—	—	— / IN	—	—	—	—
Travelled distance	OUT	—	—	—	—	—	—	IN
	IN			OUT				IN
	—	—	—	—	—	IN	—	OUT
Fuel injection amount	OUT	—	—	—	—	—	—	IN
Engine oil level	OUT	—	—	—	—	—	—	IN
Engine coolant level	OUT	—	—	—	—	—	—	IN
Fuel pump status	OUT	—	—	—	—	—	—	IN
MIL on request	OUT	—	—	—	—	—	—	IN
	IN		OUT					—
Transmission/axle specification	OUT	—	—	— / IN	—	—	—	—
Transmission construction	OUT	—	—	—	—	—	—	IN
Tire size	OUT	—	IN	IN	—	—	—	—
Cruise control main indicator light on request	OUT	—	IN	—	—	—	—	IN
Cruise control indicator light on request	OUT	—	IN	—	—	—	—	IN
Downshift request	OUT	—	IN	—	—	—	—	—
EPS warning light on request	—	OUT	—	—	—	—	—	IN
Idle speed increase request	IN	OUT	—	—	—	—	—	—
	IN	—	OUT	—	—	—	—	—
Buzzer control	—	—	—	—	OUT	—	—	IN
Keyless warning light illumination request	—	—	—	—	OUT	—	—	IN
Target torque	IN	—	OUT	—	—	—	—	—
Torque upper limit	IN	—	OUT	—	—	—	—	—
Turbine shaft speed	IN	—	OUT	—	—	—	—	—
AT warning light on request	—	—	OUT	—	—	—	—	IN

Signal	Multiplex module							
	PCM	EPS control module	TCM (AT)	ABS HU/CM (with ABS) / DSC HU/CM (with DSC)	Keyless control module	TPMS	Steering angle sensor (with DSC)	Instrument cluster
Target gear position/selector lever position	IN	—	OUT	— / IN	—	—	—	IN
	—	—	OUT	—	—	—	—	IN
Brake system status	IN	—	—	OUT / OUT	—	—	—	—
	—	—	—	OUT / OUT	—	—	—	IN
Brake light switch status	IN	—	IN	OUT	—	—	—	—
Torque down request	IN	—	OUT	— / OUT	—	—	—	—
Wheel speed (LF, RF, LR, RR)	IN	—	IN	OUT	—	—	—	—
Wheel speed sensor status (LF, RF, LR, RR)	IN	—	—	OUT	—	—	—	—
Steering angle reference point request	—	—	—	— / OUT	—	—	IN	—
Tire pressure warning light on request	—	—	—	—	—	OUT	—	IN
Tire pressure warning buzzer on request	—	—	—	—	—	OUT	—	IN
Steering angle	—	—	—	— / IN	—	—	OUT	—
Steering angle sensor status (sensor malfunction, circuit malfunction)	—	—	—	— / IN	—	—	OUT	—
Fuel tank level	IN	—	—	—	—	—	—	OUT
Parking brake position	—	—	—	— / IN	—	—	—	OUT

MS-CAN

OUT: Output (sends signal)
IN: Input (receives signal)

Signal	Multiplex module				
	Information display	Audio unit (Without car-navigation system), Car-navigation unit (with car-navigation system)	SIRIUS satellite radio unit (with SIRIUS satellite radio system)	Hands-free telephone unit (with HF/TEL system)	Climate control unit
Information switch status	OUT	—	—	—	IN
Dimmer cancel	OUT	—	—	—	IN
Audio status display request	IN	OUT	—	—	—
Buttons status	—	OUT	—	—	IN
	IN	OUT	—	—	—
SIRIUS satellite radio system related information	—	OUT	IN	—	—
	—	IN	OUT	—	—
SIRIUS satellite radio status	—	IN	OUT	—	—
Hands-free telephone system related information	—	IN	—	OUT	—
	—	OUT	—	IN	—
Hands-free telephone status	—	IN	—	OUT	—
A/C operation status display request	IN	—	—	—	OUT
A/C operation request	IN	—	—	—	OUT
Blower speed	IN	—	—	—	OUT
Beep sound request	—	IN	—	—	OUT
	OUT	IN	—	—	—

TWISTED PAIR CONSTRUCTION

id094000103900

- The multichannel use two spirally twisted wires called a twisted pair, and each wire, CAN_L and CAN_H, has its own special function.
- The two bus lines have opposite voltage characteristics, with almost no outward noise effect, and no effect from outside noise.

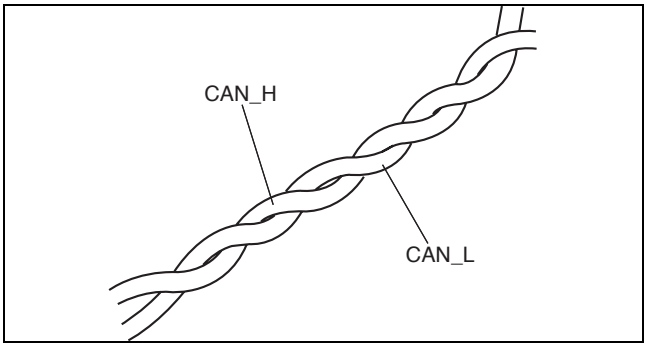

ar8uun00000314

ON-BOARD DIAGNOSTIC OUTLINE [CAN (CONTROLLER AREA NETWORK)]

id094000104000

- The CAN system related module has an on-board diagnostic function.
- The on-board diagnostic function consists of the following functions: a malfunction detection function, which detects overall malfunctions in the CAN-related parts; a memory function, which stores detected DTCs; a display function, which indicates malfunction locations and status via DTC output; and a PID/data monitoring function, which reads out specific input/output signals and verifies the input/output condition. Also, the malfunctioning part can be determined by the combination of output DTCs.
- Using the Mazda Modular Diagnostic System (M-MDS), DTCs can be read out and deleted, and the PID/data monitoring function can be activated.
- A fail-safe function is equipped in case a malfunction occurs in the CAN system. The sending module sends an error signal and the receiving module illuminates a warning light to ensure safety.

ON-BOARD DIAGNOSTIC FUNCTION [CAN (CONTROLLER AREA NETWORK)]

id094000104100

Block Diagram
HS-CAN

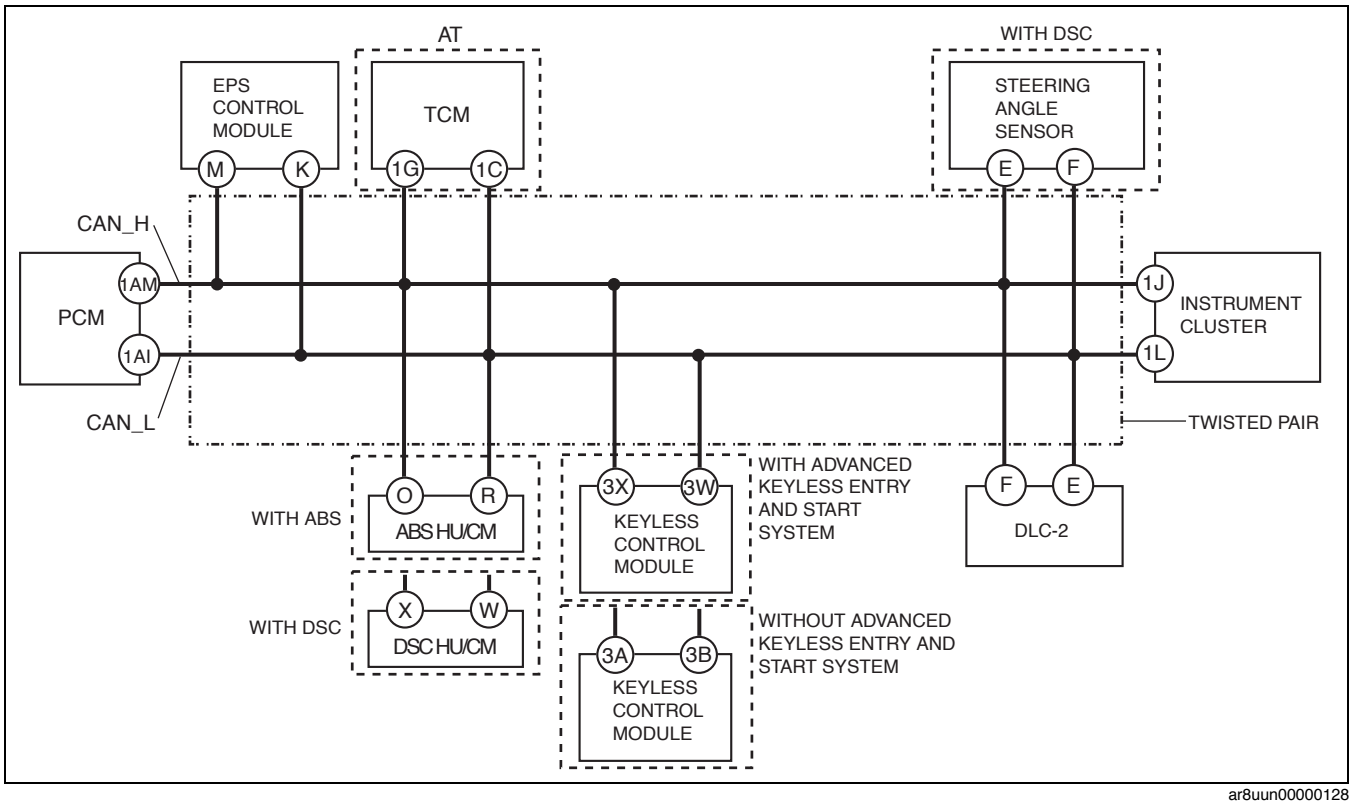

ar8uun00000128

MS-CAN

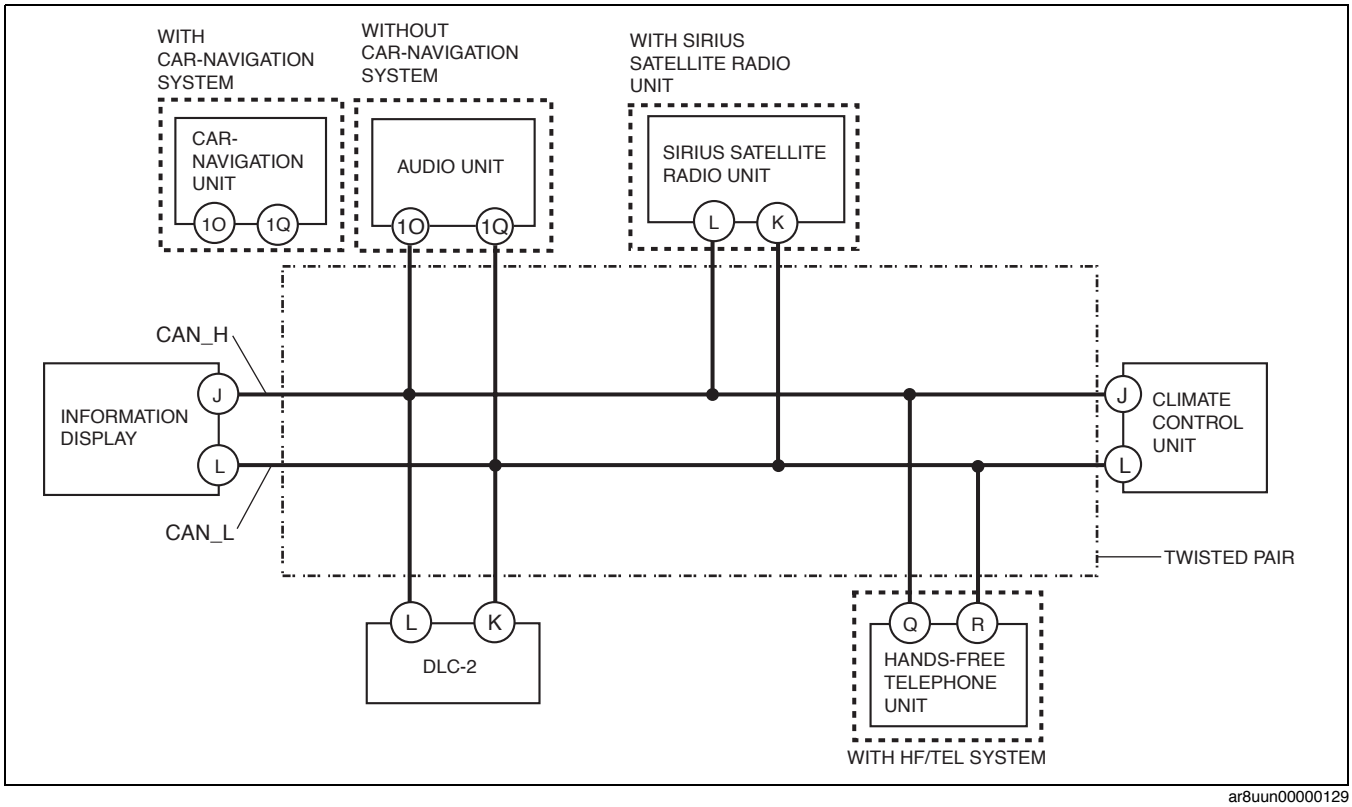

ar8uun00000129

On-Board Diagnostic Function

Malfunction detection function

- The failure detection function in each CAN system-related module detects malfunctions in input/output signals.
- This function outputs the DTC for the detected malfunction to the DLC-2, and also sends the detected result to the memory function and fail-safe function.

Fail-safe function

- When the failure detection function determines that there is a malfunction, the fail-safe function illuminates a warning light to inform the driver of the malfunction.

Memory function

- The memory function stores the DTC for the malfunction of input/output signals for related parts, as determined by the failure detection function.

Self-malfunction diagnostic function

- The self-malfunction diagnostic function determines that there is a malfunction, and outputs a signal, as a DTC, to the DLC-2. The DTC can be read out using the Mazda Modular Diagnostic System (M-MDS).

HS-CAN

DTC Output Unit	DTC	Malfunction location
Instrument cluster	U1900	CAN system communication error
	U2023	Abnormal message from other module
	U2064	Warning light illumination request signal from other modules
	U2516	CAN system communication error (HS-CAN)
PCM	U0073	Module communication error (CAN bus)
	U0101	Communication error to TCM
	U0121	ABS HU/CM (with ABS) or DSC HU/CM (with DSC) communication error
	U0155	Communication error to instrument cluster
	U0167	Communication error to keyless control module
ABS HU/CM (with ABS)	U1900	CAN system communication error
	U2516	CAN system wiring harness open or short circuit
DSC HU/CM (with DSC)	U0073	Module communication error (CAN bus)
	U0100	PCM communication error
	U0101	Communication error to TCM
	U0155	Communication error to instrument cluster
	U1900	CAN system communication error
	U2023	Abnormal message from PCM
EPS control module	U0073	Module communication error (CAN bus)
	U1900	CAN system communication error
	U2023	Abnormal message from PCM
TCM	U0073	CAN system communication error
	U0100	PCM communication error
	U0121	ABS HU/CM (with ABS) or DSC HU/CM (with DSC) communication error
Keyless control module	U0073	Module communication error (CAN bus)
	U0100	PCM communication error
	U0323	Communication error to instrument cluster
	U1147*1	Communication error to PCM
	U2023	Abnormal message from PCM
	U2510*1	Communication error to PCM

*1 : with keyless entry system only

MS-CAN

DTC Output Unit	DTC	Malfunction location
Information display	U0164	Communication error to climate control unit
	U0184	Communication error to audio unit
	U2516	CAN system communication error
Audio unit	16:Er12	CAN system communication error
Car-navigation unit	Device code 16/error code 12	CAN system communication error
	Device code 17/error code 11	Communication error to instrument cluster
Hands-free telephone unit (with audio unit)	26:Er81	CAN system communication error
Hands-free telephone unit (with car-navigation unit)	Device code 26/error code 81	CAN system communication error

PID/data monitoring function

- The PID/data monitoring function is used to freely select and read out, in real time, the monitored items for the input/output signals of the instrument cluster.
- An SST (M-MDS or equivalent) is used to read out the PID/data monitor information.

PID/data monitor table

PID name (definition)	Condition	Specification	PID monitor module	Terminal
ABS_MSG (Missing message from the ABS (DSC) HU/CM)	Present	Circuit in the ABS (DSC) HU/CM is normal.	Instrument cluster	• ABS HU/CM: O, R • DSC HU/CM: X, W • Instrument cluster: 1J, 1L
	Not Present	Circuit in the ABS (DSC) HU/CM is disable.		
EPS_MSG (Missing message from the EPS control module)	Present	Circuit in the EPS control module is normal		• EPS control module: M, K • Instrument cluster: 1J, 1L
	Not Present	Circuit in the EPS control module is disable		
PCM_MSG (Missing message from the PCM)	Present	Circuit in the PCM is normal.		• PCM: 1AM, 1AI • Instrument cluster: 1J, 1L
	Not Present	Circuit in the PCM is disable.		
RKE_MSG *1 (Missing message from the keyless control module)	Present	Circuit in the keyless control module is normal.		• Keyless control module: 3X, 3W • Instrument cluster: 1J, 1L
	Not Present	Circuit in the keyless control module is disable.		
TCM_MSG *2 (Missing message from the TCM)	Present	Circuit in the TCM is normal.		• TCM: 1G, 1C • Instrument cluster: 1J, 1L
	Not Present	Circuit in the TCM is disable.		
TPM_MSG (Missing message from the instrument cluster)	Present	Circuit in the instrument cluster is normal		• Instrument cluster: 1J, 1L
	Not Present	Circuit in the instrument cluster is disable		

*1 : With advanced keyless system
*2 : AT

Narrowing down malfunction locations

- When the CAN system is thought to be malfunctioning based on the repair order form and the malfunctioning symptom, perform the CAN system on-board diagnosis.
- DTCs are output due to a control module or sensor malfunction, or incorrect power supply. Verify the output DTCs and first inspect the DTCs not shown in the DTC table.
- The open circuit location in the CAN system can be determined by verifying the DTCs detected in each module and by the module which has failed.
- It is possible for signal error DTCs to be output in addition to communication error DTCs if there is an open circuit. Determine the open circuit location if the communication error and signal error DTCs are output simultaneously.
- For DTC details, refer to the “Self-malfunction diagnostic function”. (See 09-40-11 Self-malfunction diagnostic function.)

Troubleshooting procedure

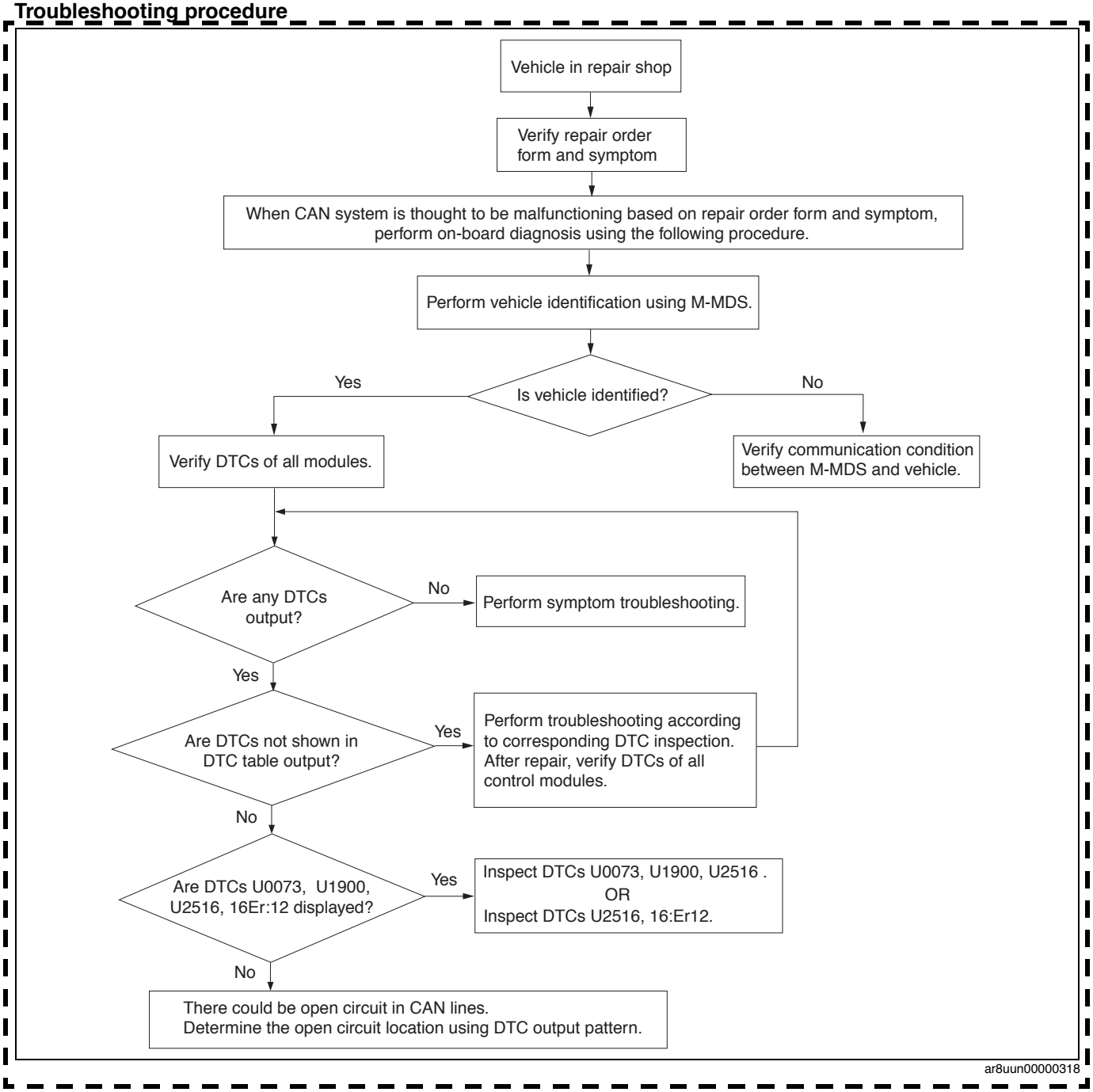

ar8uun00000318

Example: ABS HU/CM-related wiring harness open circuit (if DTC is output)

1. Verify the CAN system-related module DTCs and the failed module using the Mazda Modular Diagnostic System (M-MDS).

Module	Displayed DTC	Probable malfunction location
PCM	U0121	ABS HU/CM communication error
TCM	U0121	ABS HU/CM communication error
Instrument cluster	U1900	CAN system communication error

Module	Fail
ABS HU/CM	×

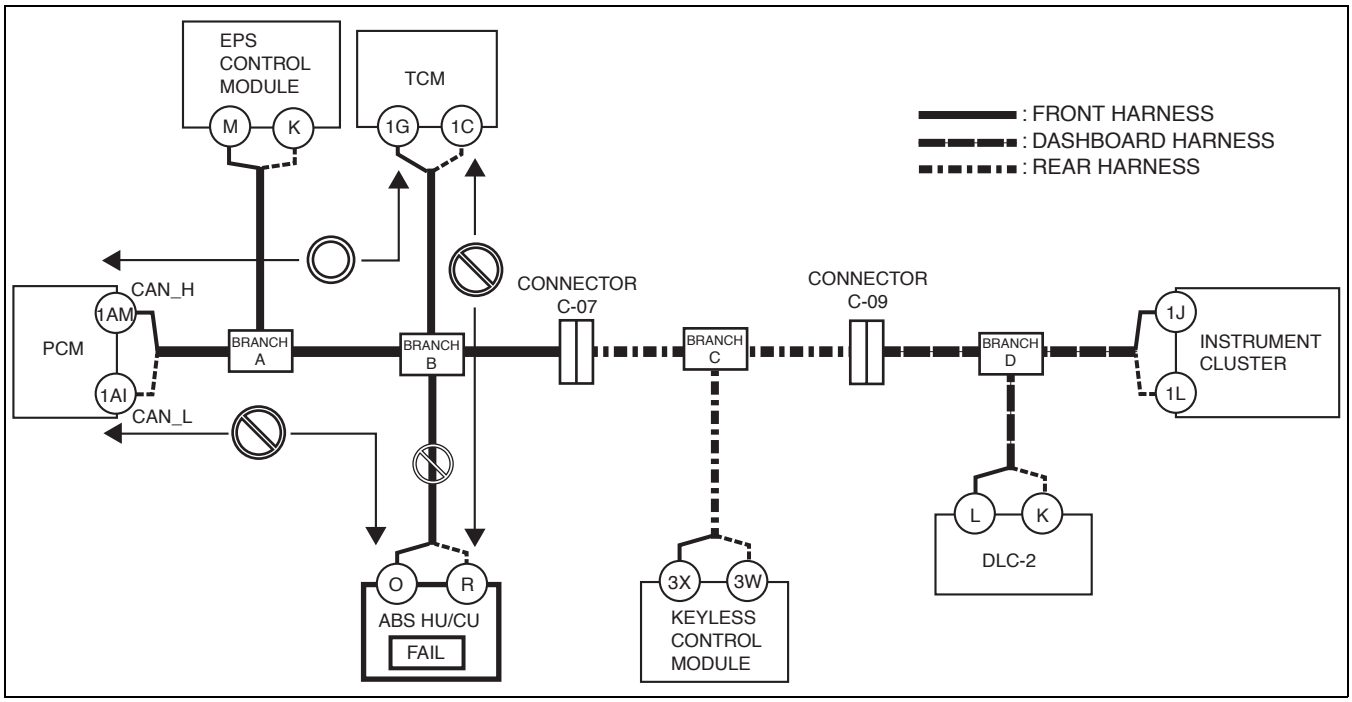

ar8uun00000130

2. The wiring harness between the ABS HU/CM and branch B, or the ABS HU/CM itself could have a malfunction because the DTCs indicating a communication error between the ABS HU/CM and PCM/TCM, in addition to “Fail” on the ABS HU/CM, are displayed even though communication between the PCM and TCM is normal.