00 01 03 (035)

Abbreviations

All models

Introduction

There are a large number of abbreviations used at BMW: in development, production, organisation, sales/marketing, test plans and technical vehicle documentation.

BMW language: about 1,500 abbreviations used in technical areas alone!
To assist with diagnoses, BMW Service Technology has several lists of abbreviations. These abbreviations should not appear cryptic, particularly to those who are coming into the workshop for the first time or from other departments, but also anyone else interested in technology. Abbreviations can be simple keywords, whose meaning is clear. These lists of abbreviations may help to clarify.

Lists of abbreviations

The following lists of abbreviations are available:

- **Series and models with images: Update 01/2013**

  Series from recent years with images, sales names, engines etc. [more ...]

- **Engines since 1983: Update 01/2013**

  Engines and the related electronic engine control [more ...]

- **Gearbox: Update 01/2013**

  Gearboxes and the related electronic transmission control [more ...]

- **Control units: Update 01/2013**

  Current control units in diagnosis and programming [more ...]

- **BMW Service Technology - Glossary: Update 07/2007**

  More than 700 abbreviations used in BMW Service Technology. New in relation to the 2004 list of abbreviations:

  - Some new abbreviations have been included.
  - Some abbreviations have been deleted. Reason: Die number of abbreviations should be kept as low as possible, in order to optimise and simplify the reading process.
  - Some of the text the "Use" column has been revised.

  For technical reasons, the glossary is divided into the following systems:

cardiagn.com

- Introduction, abbreviations with numerals and characters [more ...]
- - A -
- - B -
- - C -
- - D -
- - E -
- - F -
- - G -
- - H -
- - I -
- - J -
- - K -
- - L -
- - M -
- - N -
- - O -
- - P -
- - Q -
- - R -
- - S -
- - T -
- - U -
- - V -
- - W -
- - X -
- - Z -
- Overview of Unified Parts Group [more ...]

Note: Thanks for your support and feedback.

Our sincere thanks to our colleagues in the diagnosis, programming, and integration departments, to our repair instruction authors and Aftersales Training staff for taking the trouble to draw up their lists, and for their support in aligning the data. Our special thanks to the company archives for providing images of earlier models, and for their extensive and detailed editing work.

We can assume no liability for printing errors or inaccuracies in this document and reserve the right to introduce technical modifications at any time.

cardiagn.com

11 02 05 (130)

Vacuum supply

All models

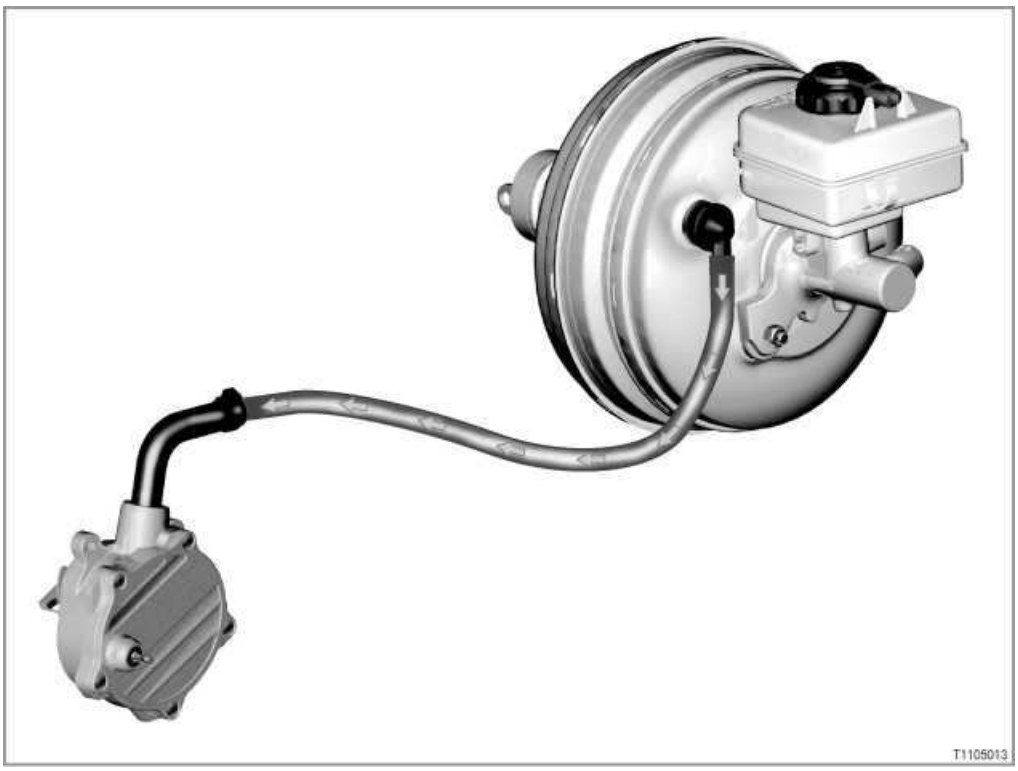

Introduction

Vacuum is principally used for the brake booster.
The vacuum in the inlet pipe depends on the varying engine load.

Diesel engines do not normally have any vacuum in the inlet pipe. Vacuum on diesel engines is provided by a pump that generates the required vacuum.
On spark-ignition engines with Valvetronic, the throttle valve is almost always open when driving. This means that there is a lower low air pressure in the intake manifold.
Spark-ignition engines with low vacuum in the inlet pipe also have a pump that generates additional vacuum.
[System overview ...]

Brief description of components

The following components are involved in the vacuum supply system:

- **Mechanical vacuum pump**

  A mechanic vacuum pump is fitted to diesel engines and spark-ignition engines with Valvetronic.

  The vacuum pump is mechanically driven by the engine, e.g. via the exhaust camshaft.

- **Suction-jet pump**

  As a rule, the suction-jet pump boosts the vacuum in the inlet pipe.

  [more ...]

- **Electric vacuum pump**

  On some engines, an electric vacuum pump is fitted for additional vacuum supply.
  In certain temporary operating situations, the vacuum in the inlet pipe may be too low. In such cases, the inlet pipe vacuum cannot be adequately boosted by the suction-jet pump. In these situations, the electric vacuum pump ensures that sufficient vacuum is available.

  Reason: After a cold start, an operating situation occurs in which there is very little inlet pipe vacuum due to the higher load. The electric vacuum pump is actuated for a certain time. This ensures that the brake is

cardiagn.com

sufficiently boosted when manoeuvring.

After a cold start, the DME will actuate the electric vacuum pump **once only** for max. 60 seconds.

The electric vacuum pump is actuated in the following situations:

- Engine-running signal from DME
- Coolant temperature below 60 °C

The electric vacuum pump is a vane-cell pump.

- **Throttle valve**

  The throttle valve changes the cross-sectional area of the inlet pipe. This creates an inlet pipe vacuum behind the throttle valve, especially in overrun mode.

- **DME or DDE: Digital engine electronics or digital diesel electronics**

  The DME or DDE actuates the components needed for system functions (e.g. solenoid valves, electric switching valves, electropneumatic pressure converters).

System functions

The system functions of the vacuum system are described using the following examples:

- Power assist for brakes
- Actuation of exhaust flaps
- Adjustment of variable turbine geometry
- Actuation of controlled damping mounts
- Exhaust gas recirculation
- Drawing off of blow-by gases from crankcase
- Blowing out activated charcoal filter

Power assist for brakes

The brake booster amplifies the force excerpted at the brake pedal. To do this, the brake booster stores part of the vacuum generated by the engine. The vacuum then amplifies the force generated by pressure on the brake pedal.

Actuation of exhaust flap

A controlled electropneumatic exhaust flap is fitted in the exhaust system. The exhaust flap enhances active sound-damping. The exhaust flap is closed by vacuum.

Adjustment of variable turbine geometry

The variable turbine geometry controls the boost pressure via adjustable guide vanes. The guide vanes are actuated by vacuum.

Actuation of controlled damping mounts

In the basic setting, there is no vacuum at the control component od the mount. The bypass in the mount is closed. Hydraulic fluid flows back and forth through a ring channel between the upper and lower chambers in the mount. The mount acts like a conventional hydraulic bearing. The mount has hard damping.
If a vacuum is applied to the mount's control component, the bypass will open. The hydraulic fluid then flows back and forth between the chambers through a larger cross-sectional area. The mount has softer damping.

Exhaust gas recirculation

With exhaust gas recirculation, part of the exhaust gas is take from behind the exhaust manifold. This is then fed back into the engine through the intake air duct. The exhaust gas recirculation pipe is located at the inlet to the intake manifold.
If a vacuum is applied to the exhaust gas recirculation valve, the exhaust gas recirculation pipe will open. The level of vacuum is determined by the opening in the exhaust gas recirculation valve.
Exhaust gases flow through a connecting pipe to the exhaust manifold and into the intake manifold.

cardiagn.com

Drawing off of blow-by gases from crankcase

The crankcase ventilation system uses vacuum to bleed the blow-by gases out of the engine block. Blow-by gases are the small portion of the cyinder fill that passes by the piston rings and into the crankcase during compression. If the blow-by gases are not bled from the engine block through the crankcase ventilation system, they will accumulate in the crankcase. The blow-by gases would then apply pressure on the pistons from below. This would have a negative effect on the downward movement of the pistons in the intake stroke and operating stroke.

Blowing out activated charcoal filter

The fuel tank vent hose is connected to an activated charcoal filter. Vapours from the fuel tank are collected in the activated charcoal filter. The activated charcoal filter is connected to the intake manifold by a pipe. A fuel evaporation control valve is fitted in this pipe. When the fuel evaporation control valve is opened, the vacuum in the manifold draws in fresh air. At the same time, the fresh air blows out the fuel vapours collected in the activated charcoal filter.

Notes for service staff

Service staff should note the following points:

- General information: ---
- Diagnosis: ---
- Encoding/programming: ---
- Car and Key Memory: ---

Subject to change.

cardiagn.com

18 02 03 (062)

Exhaust standard EURO 4 and E-OBD for diesel engines

M47TU, M57TU

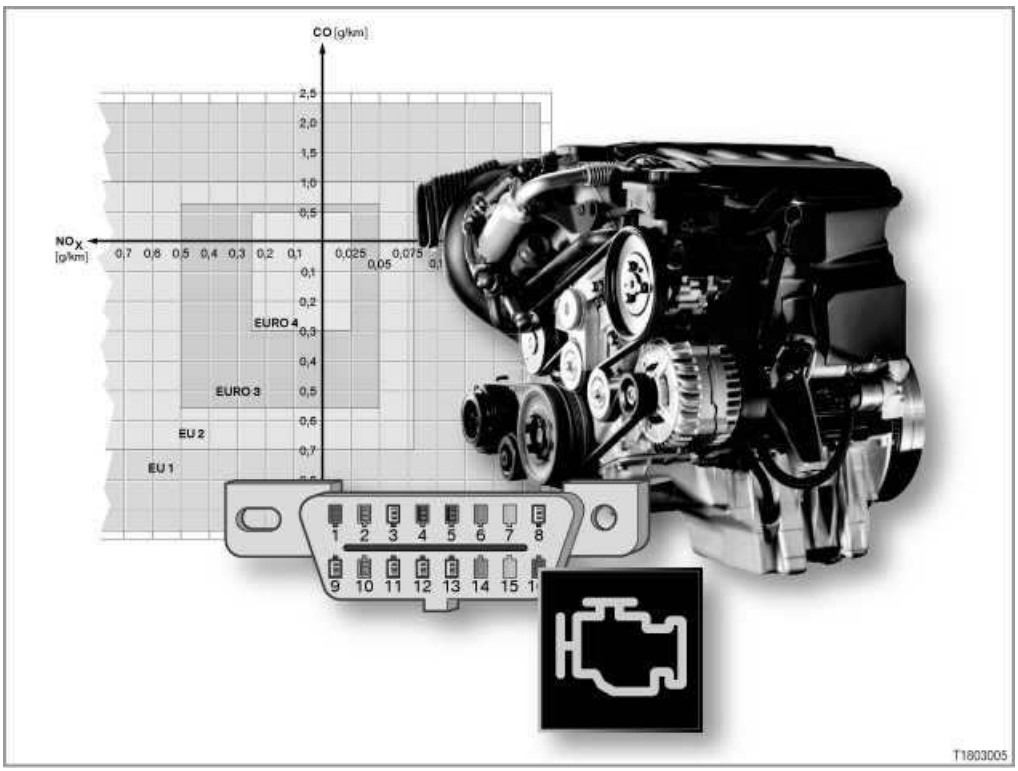

Introduction

Exhaust emission standard EURO 4 is mandatory across Europe from 01.01.2005 for newly homologated vehicle types ('homologation' = registering a production vehicle in the international registrations list). Exhaust emission standard EURO 4 is mandatory from 01.01.2006 for the registration of all new vehicles. Exhaust emission standard EURO 4 further reduces the limit values for pollutants in exhaust gas. [more ...]

In addition, in Europe from 01.01.2004 the European on-board diagnosis (E-OBD) is legally required for all diesel engines in passenger cars. [more ...]

This BMW Service Technology also includes a list of fault codes for the E-OBD. [more ...]

The 4-cylinder diesel engine M47TU is installed in the E46 (RHD since 09/2003, LHD since 03/2004) with manual gearbox and exhaust emission standards EURO 4. In 03/2004 exhaust emission standards EURO 4 was also implemented in the 6-cylinder engine M57TU. [System overview ...]

On the M57TU the E60/E61 was equipped for the first time with a diesel particle filter. The diesel particle filter separates out the soot particles in the exhaust gas with a high level of filter performance (> 95 %). The nitrogen oxide emissions do not affect the diesel particle filter. The nitrogen oxide pollutant emissions are reduced by measures inside the engine. The new diesel particle filter developed by BMW does not deliver the customer any disadvantages relating to:

- Scope of maintenance work
- Fuel consumption
- Engine power
- Nose comfort

The diesel particle filter is currently designed for approx. 200,000 kilometres (monitoring by means of Condition Based Service). The use of a fuel additive in regeneration of the diesel particle filter is **not** necessary (fuel additive reduces the ignition temperature of the soot).

Brief component description

To comply with exhaust emission standard EURO 4, the following components in the M47TU/M57TU are new or have been modified:

- **Oxygen sensor**

cardiagn.com

A Lambda oxygen sensor is necessary for compliance with exhaust-gas limit values.

The oxygen sensor is required for the quantity mean value adaptation of the injectors.

The Lambda oxygen sensor measures the fuel-air ratio. In the event of deviations, the DDE adapts the exhaust-gas recirculation rate to suit the change in air/fuel ratio.

[more ...]

- **Injector**

  The injector characteristic map is adapted to suit the fuel injection rate.

  A design change has given the injection system a constant characteristic curve. That means that changes in the injection period can directly impact changes in the fuel injection rate.

  [more ...]

- **Charging pressure actuator (electrical actuator drive on the exhaust turbocharger)**

  The exhaust turbocharger has a variable turbine geometry (VNT = "variable turbine geometry" from the English term "Variable Nozzle Turbine"). To achieve compliance with exhaust emission standard EURO 4 an electrical charging pressure actuator now adapts the variable turbine geometry (previously, an electromagnetic pressure converter adjusted the variable turbine geometry).

  By virtue of the increased adjustment speed and the more rapid response to changes, greater precision is achieved in respect of charging pressure control.

  [more ...]

- **Cylinder head and piston**

  The cylinder head has a geometrically revised swirl port and swirl port.

  To improve mixture preparation, the shape of the piston recess has been modified. This has also give rise to a change in the coolant duct in the piston.

  [more ...]

- **Exhaust gas recirculation cooler**

  The exhaust-gas recirculation cooler is now longer. The exhaust-gas recirculation cooler therefore has increased cooling power. With the new exhaust-gas recirculation cooler, the exhaust-gas temperature is reduced by approx. 100 °C (in the driving cycle for EURO 4).

  [more ...]

- **Diesel particle filter (only M57TU in the E60, E61)**

  The diesel particle filter has a catalytic coating which absorbs soot particles from the exhaust gas. Continuously, the stored soot particles are incinerated once the exhaust gases reach a temperature of approx. 350 °C.

  Cyclically, the stored soot particles are incinerated once the exhaust gases reach a temperature of approx. 600 °C.

  [more ...]

  When the diesel particle filter is used, additional components are required for the Digital Diesel Electronics (DDE):

  - **Throttle valve**

    Under certain operation conditions, the throttle valve throttles the intake air. In combination with 1 to 2 post injections, this leads to an increase in the exhaust-gas temperature (regeneration of the diesel particle filter). [more ...]

  - **Exhaust backpressure sensor upstream of the diesel particle filter, exhaust temperature sensor upstream of catalytic converter and exhaust-gas temperature sensor upstream of the diesel particle filter**

    With the exhaust backpressure sensor, the level of load on the diesel particle filter is calculated when the vehicle is in motion. Whenever the diesel particle filter has built up too many soot particles, a regeneration cycle is initiated.

    As a further parameter, the exhaust-gas temperature is measured upstream of the diesel particle filter. Measurement of the exhaust back pressure by the exhaust backpressure sensor is not sufficient in its own right (load-dependency).

    From both these signals, the DDE calculates the precise loading for the diesel particle filter.

cardiagn.com

The exhaust temperature sensor upstream of catalytic converter monitors the exhaust-gas temperature upstream of the oxidation catalytic converter. Regeneration of the diesel particle filter cannot take place until an exhaust-gas temperature of approx. 350 °C.

[more ...]

- **Leaktight swirl flaps**

  The M57TU has totally leaktight swirl flaps (electrically activated in the E46, otherwise activated by vacuum). This does not give rise at the lower end of partial load operation to any leakage around the swirl flaps, making an increase in swirl possible. In addition, with the electrical activation function, a tremendously wide variety of intermediate settings on the swirl flap can be achieved.

System functions

Despite component tolerances and influences on components over their operating time (e.g. wear), careful attention must be paid to these points: The emissions threshold values must be complied with to a sufficiently large safety distance. More extensive emission-related fluctuations can be anticipated in the first instance from the following components:

- Injectors
- Hot film air mass meter
- Rail pressure sensor

The tolerances of the components and the influences over the operating time on component must be compensated for. For compensation on the DDE (Digital Diesel Electronics) the following system functions exist:

- Injection quantity compensation
- Zero-quantity adaptation
- Mean quantity adaptation
- Regeneration of the diesel particle filter (only M57TU in the E60, E61)

Injection quantity compensation

Injection quantity compensation involves the definition of correction values for pre-injection and main injection of an injection system. The injection quantity compensation process is conducted at the end of the production process.

The tolerances given to the injectors on manufacture mean that the actual injected fuel quantity deviates slightly from the calculated fuel quantity. The extent of this deviation is established after production for every injector by measurements, conducted across several operating points.

From these measurements, an adjustment value (code) is generated for each injector.

The structure of the alphanumeric code depends on the exhaust emission standard applicable to that engine:

- Exhaust emission standard EURO 3: **six-digit** (e.g. 78SNGT)
- Exhaust emission standard EURO 4: **seven-digit** (e.g. 88S66NB)

During vehicle assembly, after installation of the DDE control unit, the adjustment value of each installed injector is stored in the DDE control unit. The adjustment values are allocated to the individual cylinders according to the installation of the injectors. With these adjustment values, the DDE control unit corrects the calculated fuel injection rates slightly and, in this way, it reduces the cylinder-specific deviation of the fuel injection rate.

Whenever injectors have to be replaced, it must be ensured that the stamped alphanumeric code of each injector is assigned to the correct cylinder in the DDE control unit.

The BMW diagnosis system has the service function ”Injection quantity compensation”. With this service function, the code for each cylinder can be changed and stored on the DDE control unit.

For cylinders for which no new adjustment value is entered, the old adjustment value is retained in the DDE control unit. Injection quantity compensation must also be performed if the DDE control unit is replaced and communication was no longer possible with the old control unit.

The codes for the injectors installed must be read off and stored in the DDE control unit.

cardiagn.com

Zero-quantity adaptation

Zero-quantity adaptation is the adaptation process which is used after the running-in phase (approx. 1500 km) for every single injector to assure the presence of a defined level of pre-injection.

To achieve compliance with exhaust emission standard EURO 4, precise metering of the very small fuel injection rate is required for pre-injection purposes.

Due to the deviation for the fuel injection rate over the operating time, the zero-quantity adaptation is performed continuously by the DDE control unit.

For every cylinder in coasting (overrun) mode, a small quantity of fuel is injected. This quantity is then varied until the desired torque rating is detected by the DDE. To calculate the torque rating, the irregular rotation of the crankshaft is incorporated in the equation. This irregular rotation is recorded on the crankshaft sensor.

This enables the DDE to detect the activation duration after which the cylinder starts to operate. The quantity of fuel injected during the zero-quantity adaptation period is used by the DDE as a correction value for the gearshift map of the pre-injection process.

The zero-quantity adaptation process switches from one cylinder to another in each overrun phase at:

- engine speed 1500 to 2500 rpm (engine at operating temperature)

The zero-quantity adaptation has no impact on fuel consumption because only a small quantity of fuel is injected into each cylinder (approx. 1 mm^3).

Mean quantity adaptation

Mean quantity adaptation is the adaptation process at which the air/fuel ratio is corrected (partial load range). This correction is performed by adapting the amount of air by means of the exhaust-gas recirculation valve.

Whereas no additional components are required for the injection quantity compensation and for the zero-quantity adaptation, an oxygen sensor is required for the mean quantity adaptation. The oxygen sensor is a broadband oxygen sensor with a constant characteristic curve.

The mean quantity adaptation is not a rapid control operation, but is instead an adaptive learning procedure.

An oxygen sensor deviation is ”learned” in a characteristic map and stored for a sustained period in the DDE control unit (EEPROM).

The characteristic map must be reset (deleted) in EEPROM if any of the following components is replaced:

- Hot film air mass meter
- Injector
- Rail pressure sensor

To reset the characteristics map, the BMW diagnosis system offers the service function of ”mean quantity adaptation”.

cardiagn.com

Regeneration of the diesel particle filter (only with M57TU in the E60, E61)

The soot load in the diesel particle filter is established by the DDE from the engine operating points.

Regeneration of the diesel particle filter can be continuous and/or cyclical.

- **Continuous regeneration:**

  In operating ranges at which the exhaust-gas temperature exceeds the ignition temperature of the soot (>350 degrees Celsius), the soot particles are converted directly. This involves the soot particles being converted by a process of slow oxidation into carbon monoxide (CO) and carbon dioxide (CO_2).

  The oxidation agent is the nitrogen dioxide present in the exhaust gas (NO_2). This nitrogen dioxide is formed from the nitrogen monoxide (NO) in the oxidation catalytic converter.

  If the exhaust-gas temperature is not hot enough for this process, the soot particles are initially collected in the diesel particle filter and are then incinerated the next time that the exhaust-gas temperature increases.

- **Cyclical regeneration:**

  If the driving style does not permit continuous regeneration of the diesel particle filter (e.g. long, sustained partial load operation in urban traffic and low exhaust-gas temperature), targeted regeneration is initiated.

  This process is controlled by signals from the exhaust backpressure sensor and two exhaust-gas temperature sensors. Cyclical regeneration runs like continuous regeneration without significant implications on drivability.

  Depending on the load condition of the engine, regeneration can take the form of targeted throttling of intake air in conjunction with 1 to 2 post-injections. This raises the exhaust-gas temperature to approx.. 600 degree Celsius. The residual oxygen in the exhaust gas (O_2) enables soot to be burned off. The regeneration of the diesel particle filter can take several minutes. The interval stages for regeneration depend on the operating conditions of the vehicle over its last 500 kilometres. At high exhaust-gas temperatures, there is less soot buildup as a result of continuous incineration of the soot particles.

  In addition, every 700 to 2500 kilometres (depending on driving profile), regeneration of the diesel particle filter can be initiated. In the event of failure of the exhaust backpressure sensor or of one of the exhaust-gas temperature sensors, the diesel particle filter is regenerated every 500 kilometres.

Notes for Service department

Observe the following information for service:

- General information: [more ...]
- Diagnosis: [more ...]
- Encoding/programming: ---
- Car & Key Memory: ---

No liability can be accepted for printing or other faults. Subject to changes of a technical nature

cardiagn.com

32 01 99 (503)

Kinematics diagnosis system and environment

BMW KDS (Beissbarth)

Table of contents

1. Foreword

1.1 Objective

1.2 Further development of the BMW kinematics diagnosis system

1.3 Technical data

1.4 Delivery specification

1.5 Required accessories

1.6 Advisable accessories

2. Measuring options with the BMW KDS

2.1 Front Axle

2.2 Rear Axle

2.3 Other rmeasuring options

3. System description

3.1 BMW KDS 1, based on the ML4000 from Beissbarth

3.2 Computer

3.3 Graphics pad

3.4 Equipment cabinet

3.5 Remote display

3.6 Measuring pickup with image sensor (CCD camera)

3.7 BMW quick-release brackets

3.8 Rotational / sliding supports

3.9 Sensor tips

3.10 Spoiler adapter

3.11 Quick-clamping units

cardiagn.com

3.12 Retaining claws
4. Work bay
4.1 Environment
4.2 Prerequisite for measurement
4.3 Measuring tolerance
4.4 Levelling of measuring point
5. Chassis-specific terms
5.1 Toe difference angle
5.2 Camber
5.3 Toe
5.4 Castor
5.5 Geometrical driving axis / symmetrical axis
5.6 Wheel offset angle
5.7 Kingpin offset / kingpin radius
6. Wheel suspension
6.1 Rigid axle
6.2 Independent suspension
7. Wheel alignment / procedure
7.1 Measuring options
7.2 Preparatory work:
7.3 Incoming / outgoing wheel alignment
7.4 Printout of the data
8. Special features
8.1 Wheel alignment with non-selective access
8.2 System setting
9. Comparison, BMW KDS (Bosch - Beissbarth)
10. Change in operation (menu)
10.1 Master key with display
10.2 Summary operating instructions
10.3 Display support
11. Software updates / nominal data
11.1 Preconditions
11.2 Procedure (Beissbarth)
11.3 Procedure (Bosch)
12. Creating, copying and editing nominal data
12.1 Copying
12.2 Creating
13.3 Editing
13. Special functions
13.1 Customer button for printer protocol
13.2 Adjustment options
13.3 Turntable test
13.4 Viewing and deleting customer entries from the database
14. Internal program change

cardiagn.com

15. Error

15.1 Tyre fault

15.2 Front axle fault

15.3 Rear axle fault

1 Preface

1.1 Objective

The complexity of wheel alignment as a topic has increased. This BMW Service Technology document is therefore intended to achieve several objectives:

- Compiling guidelines for working with the BMW KDS.
- Getting to grips with the technology of wheel alignment on modern vehicles and clarifying any questions that arise.
- Transparency and clarification of different terminology.
- Clarification of fault causes from the past, so that these can be avoided in future after studying this paper.
- Prerequisites for safe dealings with BMW KDS.

1.2 Further development of the BMW kinematics diagnosis system

- The BMW kinematics diagnosis system (KDS) forms an integral element of systems-based philosophy in relation to automotive technology. This provides the peace of mind of being able to work rationally and in a BMW-compliant manner, and the certainty of being prepared for future technological developments. With regard to precision and performance in the area of wheel alignment and chassis adjustment, BMW has done the best it can with what is technologically feasible: The BMW kinematics diagnosis system (KDS).
- The BMW kinematics diagnosis system from Beissbarth is more than just a further development of conventional axle alignment equipment. It sets new dimensions in terms of precision, performance, speed and handling. Guarantees for the perfection upon which BMW customers count in their dealings with BMW Service.
- Ride comfort, driving safety and tyre wear depend to a large extent on perfect interaction with vehicle kinematics. BMW is constantly delivering new generations of chassis and suspension to the market, each of which is superior and/or even closer to perfection than its predecessor. That means that there are fewer kinematic adjustment points on the chassis and suspension and even tighter specified tolerances with regard to wheel alignment and adjustment.
- Through the use of the multilink rear axle and the E36, the previously recommended electronic wheel alignment equipment was no longer suitable for BMW chassis alignment checks. This related to the measuring procedure as well as to the measuring accuracy. The generation of equipment approved with the introduction of the E36 range is still able today to satisfy all the requirements imposed on modern wheel alignment equipment, including the use of the latest computer technology.
- For wheel alignment purposes, only the BMW kinematics diagnosis systems from Beissbarth and Bosch may be used.

1.3 Technical data

cardiagn.com

1.	Display	- 17 inch graphics screen with high-resolution graphics (640x480 pixels with 256 colours)
2.	Teletext	- in each programmed national language
3.	Wheel sizes	- 12"...20"
4.	Vehicle memory capacity	- unlimited
5.	Turntables	- Load-carrying capacity 1000 kg, angle of rotation ± 360°, 450 x 450 x 50mm (L x B x H), sliding range ± 50 mm, weight 18 kg
6.	Sliding supports	- Load-carrying capacity 1000 kg, angle of rotation ± 10°, 450 x 450 x 50mm (L x B x H), sliding range ± 65 mm, weight 17 kg
7.	Electrical connection	- 100...115 V / 220...240 V 50/60 Hz, 0,5 kW (other connections on request)

1.4 Delivery specification

1 PC display element with graphics screen, graphics panel, equipment cabinet, small or large including automatic charging station, DIN-A4 dot matrix printer

4 Pickup with CCD camera technology and infrared data transfer, with installed voltage supply

1 Wiring harness (comprising 4 cables)

1 Brake tensioner

1 Steering wheel lock

2 Electronic precision turntable supports with integrated sensor and without approach ramp

2 Sliding supports without approach ramp

cardiagn.com

4 BMW quick-release units comprising a locating bell housing P8-68 and quick-release bracket P267 01, incl. coated retaining claws

1 Operating instructions for BMW KDS (8 languages)

1 BMW software and the BMW nominal vehicle data with adjustment images as well as texts for measurement preparations

1.5 Required accessories

2 Locking rods for positioning the vehicle

1 Set of sandbags for specified loading

1.6 Advisable accessories

4 Quick-clamping units

2 Set of collision plates

1 Remote control / display

1 Transport carriage (for ballast pockets, turntables and sliding plates, and 4 quick-release brackets)

2 Measuring options with the BMW KDS

2.1 Front axle

- Toe-in (individual wheel and total toe-in relative to the geometrical driving axis)
- Camber (when driving straight ahead)
- Wheel offset (relative to the left front wheel)
- After-run, steering axis inclination and toe difference angle

2.2 Rear axle

- Toe-in (individual wheel and total toe-in relative to the central plane of the vehicle's longitudinal axis --> previously known as the symmetrical axis)
- Geometrical driving axis
- Camber

2.3 Other rmeasuring options

- Wheel offset, rear
- Wheelbase difference
- Lateral offset, right
- Lateral offset, left
- Track width difference
- Axial offset

3. System description

3.1 BMW KDS 1, based on the ML 4000 from Beissbarth

cardiagn.com

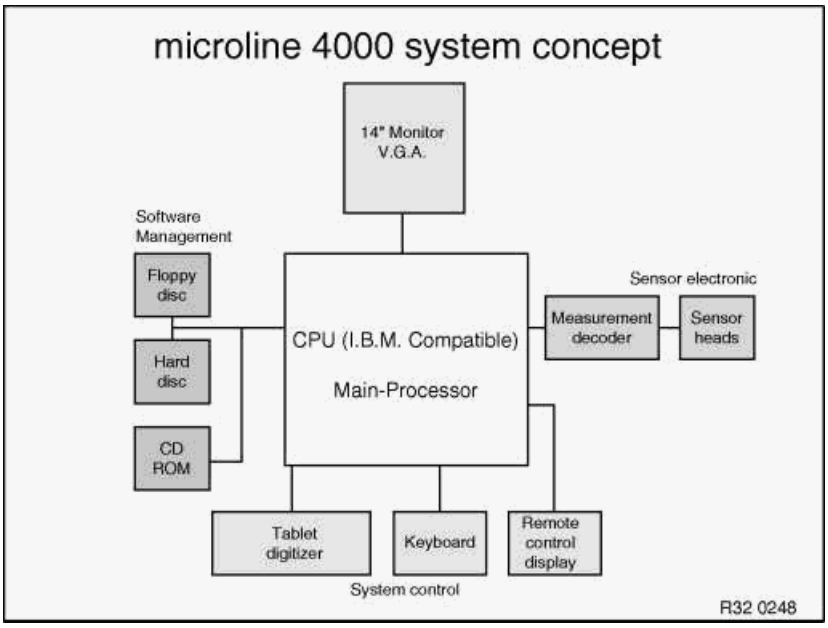

The KDS 1 is available without surcharge in a choice of two design versions:
1. Mobile workstation

2. Mobile compact cabinet

The larger workstation provides a small storage space for accessories, whereas the compact cabinet is mobile and is ideal for confined working areas. Both versions are available as a wireless measuring system (infrared). In terms of measuring technology, the only difference between these two systems is in their handling and their upgrade options. In both these versions, the four pickups are stored in integrated inserts with battery charge points. Following the automatic charging process, the accumulators on the pickups deliver enough power for 10 hours of continuous operation.

3.2 Computer

- KDS system 1 comprises tried-and-tested and thoroughly reliable industrial components. The computer is an IBM-compatible 32-bit Intel processor with CD drive, of the kind commonly used in the PC sector.

cardiagn.com

3.3 Graphics pad

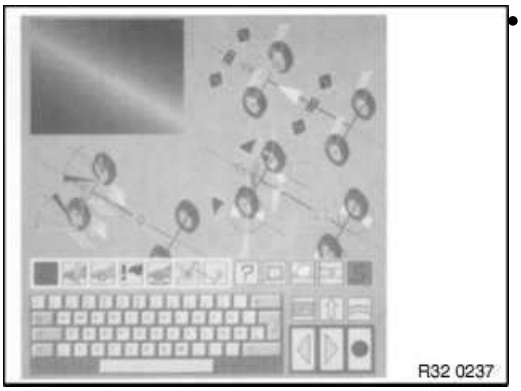

- All functions are depicted graphically on a ”Symbol" pad. The pad is protected beneath a Plexiglas panel. This is easy to replace whenever major design changes are required. The user interface has no membrane and is therefore safely protected against damage. The main functions are enabled by clicking the symbol with the sensor probe.

3.4 Equipment cabinet

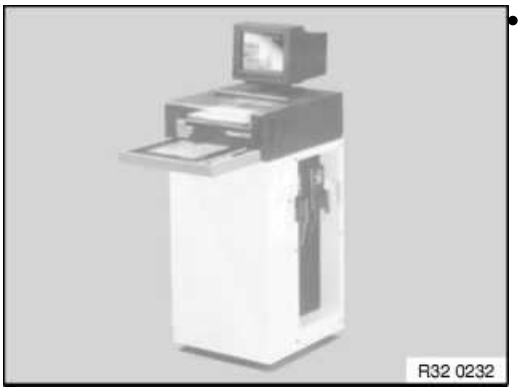

- The PC with graphics monitor and pull-out operating pad, mountings for the pickups, the remote control and the DIN-A4 printer are integrated on the workstation. The charging station is located in the cabinet and can also be connected to the pickups and remote control unit by plug-in cables (operation with simultaneous charging of the accumulators / rechargeable batteries).

3.5 Remote display

A wireless remote display unit can be provided on request. The remote control buttons are only enabled during the measurement and setting process (not in response to customer input, choice of vehicle, processing of nominal data etc.). The following displays are supported by the remote display facility:

- Measured value with nominal/actual variance comparison and tolerance bar
- Touchscreen icon for touch-sensitive routines
- Live overview of toe-in / camber values with nominal / actual comparison
- Rims, lateral runout compensation

3.6 Measuring pickup with image sensors (CCD cameras)

cardiagn.com

Each of the measuring pickups is equipped with two image sensors and its own processor for wireless infrared transmission with integrated accumulators for automatic measurement. Advantages:

- No temperature deviation
- Very high measuring resolution (theoretically, toe-in could be measured in seconds of an angle).
- Single toe-in range of more than ±9 degrees relative to constant screen display of toe-in during the replacement of track rod ends
- Exact system precision, i.e. with measurements on the vehicle following rim lateral runout compensation: an accuracy of 2 minutes of angle for toe-in and camber

3.7 BMW quick-release brackets

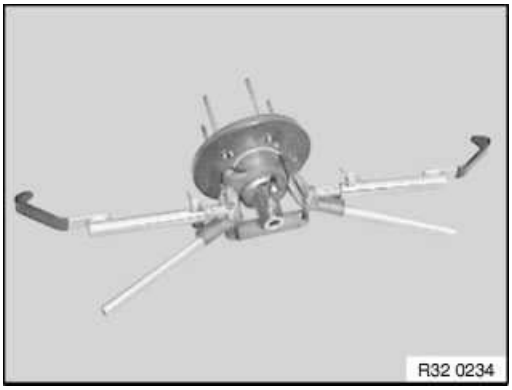

- BMW quick-release brackets for precise mounting of measuring pickups and measurement without compensation of lateral runout on rims.
- **Note:** Quick-release brackets potentially available,, e.g. from older F1600 or ML-3000 models, must not be used with the BMW KDS.

3.8 Rotational / sliding supports

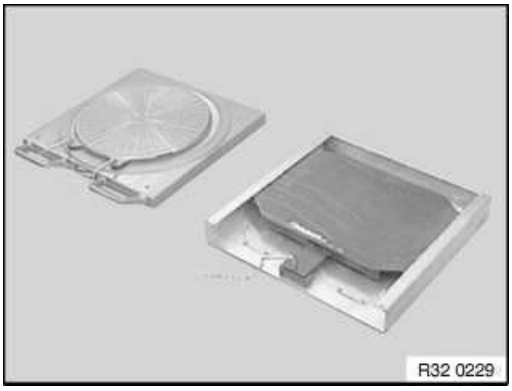

- Electronic precision turntables (rotational supports) for the front wheels with integrated sensor (360 degrees all-round measuring range)
- Robust sliding supports for the rear wheels with a swivelling / rotating upper plate.
- Accessories: Cover for aluminium rotational supports / turntables

3.9 Sensor probes

cardiagn.com

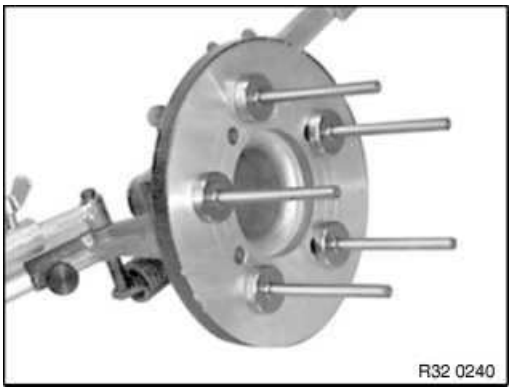

- From April 1993, a new BMW light-alloy wheel (styling No. 18) has been available as a BMW optional accessory. During vehicle alignment checks on these wheels, new sensor probes are required for the quick-release mountings on the recommended wheel alignment equipment.
- On recent deliveries of KDS 1, the new sensor probes are included in the delivery specification (order number: BS 90 19 11).

3.10 Spoiler adapters

- On vehicles with very deep spoilers, it is possible for the measuring beam between the measuring pickups to get interrupted. This is particularly true of the transverse front axle.
- In this case, the spoiler adapter acts as a connecting member between the measuring device holder and the measuring pickup. This causes the measuring pickup to be located 50 mm lower, thereby enabling the measuring beam to pass freely below the spoiler.

3.11 Quick-release mountings

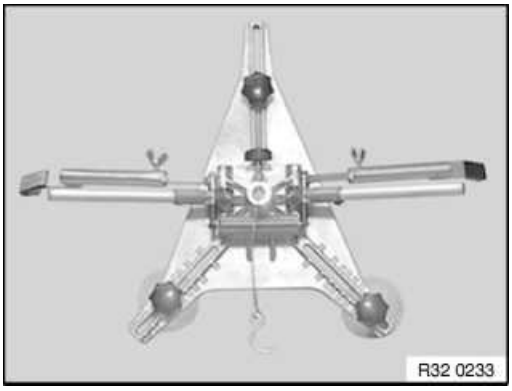

- Quick-release mountings for the wheel alignment of other vehicles with compensation of lateral runout on rims.
- Wheel rims without sensor bore holes (wheel rims for BMW vehicles made my other manufacturers)

3.12 Retaining claws

cardiagn.com

- The versatile retaining claws and the rubberised retaining claws enable an extremely wide and varied range of clamping variants to be used for the measuring equipment holder, even on exotic, i.e. extremely unusual, light-alloy rims.

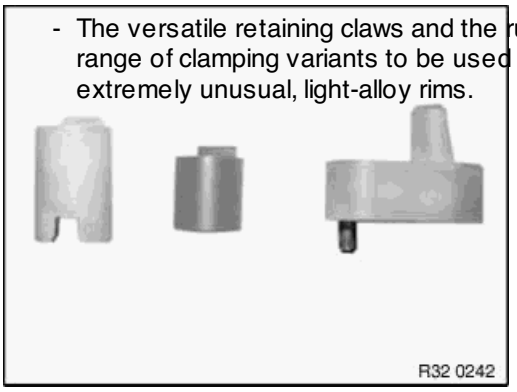

4. Workbay

4.1 Environment

Description:

All the vehicle hoists currently recommended by BMW (cf. Workshop Equipment - Planning Documentation, issue 11) for wheel alignment equipment comply with the requirements for BMW KDS.

The BMW KDS does not impose great demands on its installation location. The device can be used over inspection pits or on vehicle hoists (i.e. workshop ramps).

Prerequisites:

- Wheel alignment pits
- Telescopic mast vehicle hoists with lowering facility
- 2-stamp vehicle hoists with lowering facility
- Repair statuses with lowering facility
- One measuring station (approx. 4.5 m x 7.0 m).
- The rotational supports ('turntables') must be bolted to the vehicle hoist

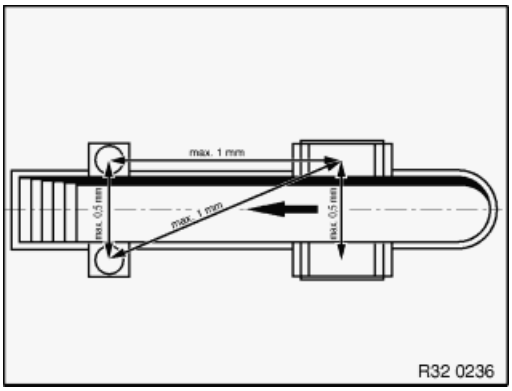

The locating surfaces for rotational and sliding plates must not exceed the maximum difference in height described below:

- from left to right ± 0.5 mm
- from front to back ± 1.0 mm
- diagonally ± 1,0 mm.

Note:

A height difference between turntables of ± 2 mm from left to right gives rise to a measuring error with camber of 4,8°.

For comparison: The camber tolerance on the E36 is ± 10'. Tyre tread difference or different inflation pressures give rise to measuring errors on the same magnitude.

4.2 Prerequisites for the wheel alignment check

During the wheel alignment check, the front and rear wheels need to be standing on the rotational and sliding

cardiagn.com

supports to enable all wheel suspension points during the touch-sensitive routine and the adjusting procedure to remain free of torsional stresses. This demonstrates the need for the rotational and sliding supports for the various wheelbases and track widths on the candidate vehicle for the wheel alignment check to be relocated.

4.3 Measuring tolerance

The full range of measuring tolerance are system tolerances. That means that the total of all individual tolerances yields the value identified in the argumenter. Example - camber: Quick-release bracket + measuring pickup + computer = 1' with a measuring range of ±3° (all BMW vehicles lie within this measuring range).

4.4 Measuring station levelling

The manufacturers of BMW KDS (Beissbarth / Bosch) are able to check the alignment of the measuring station to the required level of precision, using levelling devices to do so. Bars or hose-type water scales are not suitable. Vehicle hoists must be under load when being levelled to ensure that due account is taken of the uneven deflection in vehicle rails.

Important!

A specialist operator must be involved in the setup work on each vehicle hoist (a member of the manufacturer's Service Product Support staff).

5. Chassis-specific terms

5.1 Toe difference angle

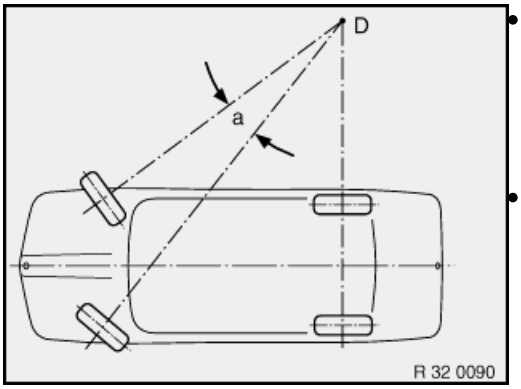

- The toe difference angle (a) is the angle setting of the inner cornering wheel relative to the outer cornering wheel when negotiating a bend in the road. Steering is designed in such a way that the relative angular positions of wheels change as steering lock progresses.
- In ideal situations, the wheel axes intersect at Point D in every steering position (except for straight ahead).

5.2 Camber

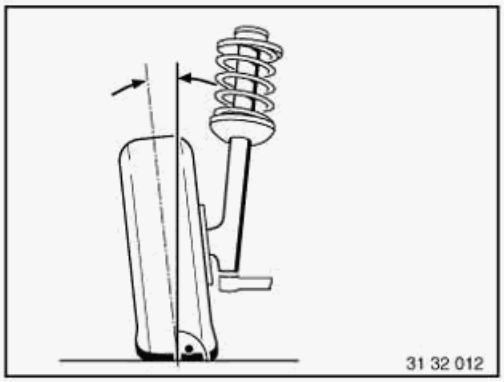

- Camber is the inclination of the wheel from the perpendicular.

5.3 Toe-in

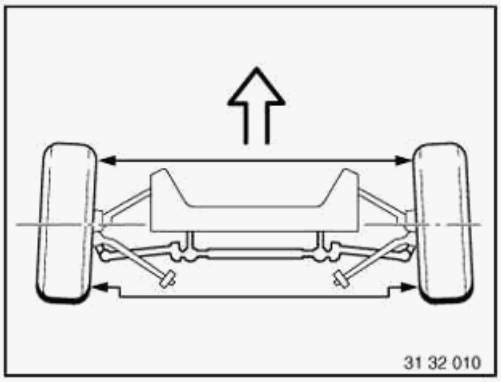

- Toe-in is the reduction in distance of front of front wheels to rear of front wheels. Toe-in prevents the wheels from moving apart when driving (wobbling and scuffing).

5.4 After-run

cardiagn.com

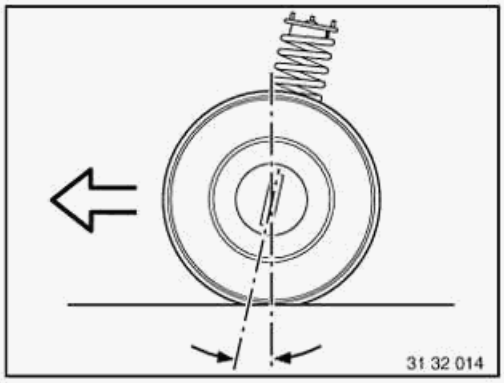

- After-run is the inclination of the kingpin viewed from the side and relative to direction of travel. The line through the centre point of the spring strut support bearing and the control arm ball joint corresponds to the "kingpin".

5.5 Geometrical driving / symmetrical axis

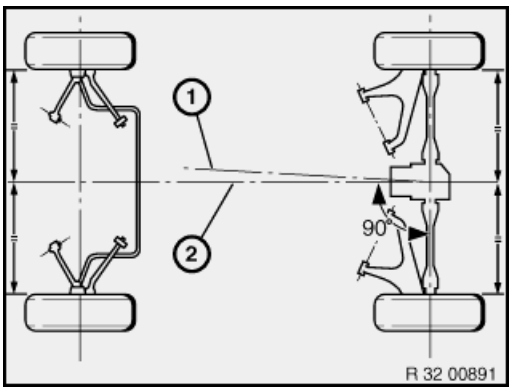

- (1) The geometrical driving axis is the angular intersection point from total toe-in on the rear wheels. Front-wheel measurements are taken in reference to this axis.
- (2) The symmetrical axis constitutes the centreline between front and rear axles.

5.6 Wheel offset angle

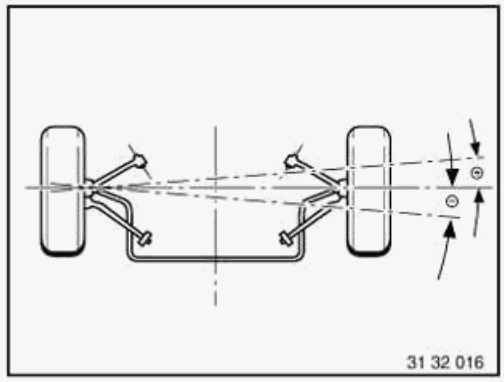

- The wheel offset angle is the angular deviation in the intersection line of wheel contact points at a line drawn at 90° to the geometrical driving axis. The wheel offset angle is positive when the right wheel is displaced towards the front and negative when it is displaced towards the rear.

5.7 Kingpin offset / kingpin radius

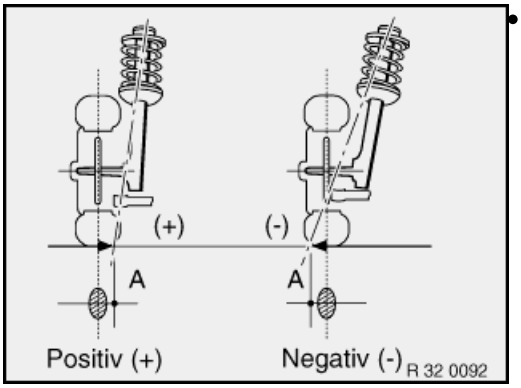

- The kingpin offset / kingpin radius is the distance from the centre of the wheel contact face to the intersection point of the extension of the kingpin axis.

6. Wheel suspension

Wheel suspension includes the components which connect the wheel to the mostly load-bearing floor pan components on the body which guide the vehicle in the desired direction. This connection involves axles or

cardiagn.com

comparable construction elements, guided by trailing arms. The type of wheel suspension is one of the determining factors governing the driving characteristics of a vehicle. A distinction is made between two main groups: 1. The rigid axle and 2. The independent suspension.

6.1 Rigid axle

Description	Advantages	Disadvantages
On the rigid axle, both wheels or pairs of wheels are connected by means of a rigid axle body. Every change in a one wheel is transferred to a greater or lesser extent to the other one. If a rigid axle has been installed, it is now only ever as a rear axle. This is sharp contrast to trucks and buses where they are used frequently.	No changes in camber and toe-in occur during suspension action. This means: low tyre wear and good directional stability.	Non-driven rear axles can also receive negative camber and this increases tyre wear.

6.2 Independent suspension

Description	Advantages	Disadvantages
Based on the modern technology standard independent suspension is available on the front and rear axles of BMW vehicles. This development was prompted by inertia mass because a reduction in unsprung masses improves wheel and ground contact, enabling the wheel to maintain better traction. The tracking of independently suspended wheels requires transverse links and trailing arms which can be called upon to absorb occasional high levels of longitudinal and lateral forces.	Independently suspended wheels do not influence one another.	Depending on design, during suspension action, changes can occur in camber, toe-in, track width, after-run and wheelbase.

7. Wheel alignment / test procedure

7.1 Measuring options

The next section itemises all the measuring options and values in an at-a-glance list (FA = front axle, RA = rear axle).

Measuring options	Measuring accuracy	with measuring range	Total measuring range
Total toe-in (FA + RA)	± 2'	± 2°	± 18°
Single wheel toe (FA + RA)	± 2'	± 2°	± 9°
Camber (FA + RA)	± 1'	± 3°	± 10°
Wheel offset (FA)	± 2'	± 2°	± 9°
Geometrical driving axis	± 2'	± 2°	± 9°
Castor	± 4'	± 18°	± 22°
Steering axis inclination	± 4'	± 18°	± 22°
Toe difference angle	± 4'	± 20°	± 20°
Maximum steering angle (FA)	± 4'	± 60°	± 300°
Maximum steering angle (RA)	± 4'	± 9°	± 9°
After-run correction range	± 4'	± 7°	± 10°

Note:

The details for the measuring accuracy only apply when using precision rotational and sliding

cardiagn.com

supports together with BMW quick release brackets.

7.2 Preparatory work:

Before the measurement can commence, preparatory work is required at the measuring station and on the vehicle (see BMW KDS, operating instructions). This preparatory work includes:

- Ease-of-movement of rotational and sliding plates
- Alignment of rotational and sliding supports to suit track width and wheelbase
- Driving of vehicle centrally onto the supports
- Apply parking brake
- Remove locking pins from the supports to prevent torsional stresses in the chassis and suspension when subjecting the vehicle to load.
- Check the wheel rim and tyre size, tread depth, inflation pressure, steering backlash, wheel bearings and condition of the suspension and shock absorbers
- Secure measuring device bracket to the wheels
- Load vehicle acc. to BMW KDS specification
- Apply sudden load to vehicle with brakes released to obtain a stable centre position.
- Secure the service brake by applying the brake tensioner

7.3 Input / output measurement

This measurement can be conducted as a program-guided measurement check, just like any subsequent adjustment work and the ensuing outgoing alignment check. The sequence of chassis and suspension measuring points to be called up and checked by the systems software. The individual procedural steps cover:

- driving in a straight line to obtain an accurate record of the toe-in and camber value for the rear axle
- touch-sensitive routine to determine after-run, steering axis inclination and toe difference angle
- Recording of toe-in and camber of front axle (prior to this, set the steering centrepoint)
- touch-sensitive routine to measure the maximum steering angle on left and right sides
- Checking the measuring value summary with nominal / actual comparison of all measured values.

7.4 Printout of the data

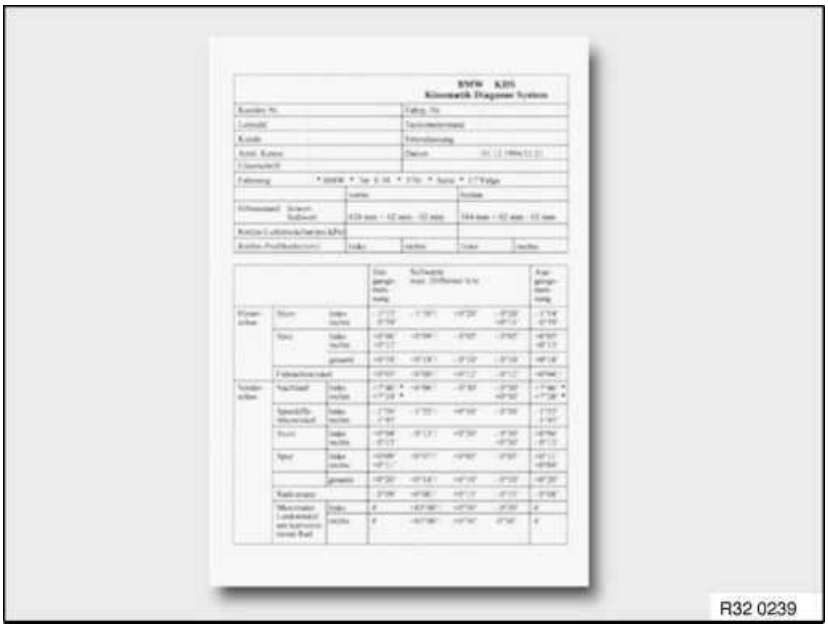

The report printout from the integrated DIN-A4 printer is subdivided into three areas:

- Headers with customer and vehicle identification data --> here, the customer data entered before the start of measuring work are printed out together with the vehicle data.
- Centre section with vehicle data --> these include brand, type, model and model year of the vehicle, as defined during selection of the nominal data record. Furthermore, this section involves printing out the previously measured values for ride height, inflation pressure and tread depth.

cardiagn.com

- The final section with all chassis and suspension measuring values comprises 3 columns: incoming wheel alignment check, nominal values and outgoing measurement. The measured values are recorded separately in these 3 columns.

8. Special features

8.1 Wheel alignment with non-selective access

During wheel alignment checks with non-selective access, the selection and sequence of measuring points can be made in any desired order. When doing this, the following points must be observed in order to achieve the correct measuring results:

- Carry out all work as defined during the program-guided wheel alignment check.
- Before the alignment check of toe-in and camber values on the rear axle, the steering must be set in its 'straight-ahead' position to ensure that it is aligned with the vehicle's centre axis.
- Prior to the alignment check of individual toe-in values on the front axle, the steering wheel centre position needs to be determined to ensure that the steering wheel is in its correct position.

8.2 System settings

The following settings only need to be entered and set once: language, display format, date/time, promotional text, remote control with display, selection of rotary plate and printer setting. These remain saved in memory.

9. Comparison, BMW KDS (Bosch - Beissbarth)

	Bosch	Beissbarth
Recording of measuring values	Infrared	Image sensor
Data transmission	Cable	Infrared / cable
Voltage supply to the pickups	Cable	Accumulator / cable
Master key	Infrared	Infrared
Master key with measuring value display	Cable	Infrared
Nominal data memory	Disk	Hard disk
Measuring value memory	Always the last vehicle measured	unlimited vehicle memory capacity
Operating system	---	MS-DOS
Languages	English and one language on order	EN, DE, NI, SV, IT, FR, SP (other languages on request)
Update	3.5" diskette	3.5" diskette from TIS/DIS
Monitor	20"	17"
Computer	---	Pentium
Drives	2 x diskette	1 x diskette, 1 x CD-Rom

10 Change in operation (menu)

10.1 Master key with display

The process of enabling the master key with display is described in the following procedural steps:

1. in the special functions (button ”**S**"), call up the ”**Service**" menu
2. In the”**Service**" menu, call up the ”**Master key**" submenu
3. In the ”**Master key**" submenu, select the ”**Master key with display**" point - this is a once-only setting.

Important!

On devices without master key, this setting must be set to ”**No master key**".

10.2 Summary of operating instructions

1. Switch on the master key by pressing the ”**ON**" button (it is permissible to switch this on during the alignment check). The title screen then appears on the LCD.

cardiagn.com

2. On the measuring equipment cabinet, select "**Straight-ahead driving**" for the "**Incoming alignment check**", then "**Adjusting procedure**" or the "**Outgoing alignment check**". The following graphic appears on the LCD monitor for "**Driving straight ahead**".
3. Pressing the "**Forwards arrow**" calls up the next measuring screen. What next appears on the LCD display blocks are a designation of the measured value and a tolerance bar with measured value. If that measured value is within tolerance, this is depicted with black numerals on a light background. If that measured value lies outside the tolerance, it is then displayed in inverted fashion (i.e. light numerals on a dark background).
4. Pressing the "**F**" button briefly makes it possible to alternate between the designation of the measured value and the nominal value with tolerance within the display block.
5. To scroll onwards through the measured values, press the "**Forward arrow**", "**Backward arrow**" and the "**Cancel" keys (red spot)** . The function of this button is identical to that of the buttons/keys on the graphics pad.
6. Even when opting for the "**Alignment check with non-selective access**", the measured values can be chosen in the same way as for the "program-guided alignment check" process.
7. Using the "**Printer**" button enables reports to be printed out during the alignment check. The remote control buttons are only enabled during the measurement and setting process (not in response to customer input, choice of vehicle, etc.).

10.3 Display support

- Measured values with nominal/actual comparison and tolerance bar (nominal values can be displayed by pressing the "**F**" key/button)
- Touchscreen icon for touch-sensitive routines
- Summary of measured values with the latest nominal / actual comparison
- Compensation for lateral runout on wheel rims
- With all other functions (e.g. customer input), the title image appears on the liquid crystal display

Note:

Whenever data transfer from the master key / remote control to the computer is interrupted, the master key icon in the lower right-hand corner of the screen changes colour from green to red and the image on the LCD display is depicted in inverted format, i.e. black becomes white and vice versa. This changeover does not occur in the title image. Once visual connection is re-established, the master key recommences work at the point in the program where the interruption occurred. Continuous visual connection during the alignment check is therefore not necessary.

- The "**Egg timer**" icon on the LCD display indicates: "**Please wait**".
- The "**Battery**" icon in the upper right-hand corner of the LCD display indicates that the battery reserve has been reached.
- Switching off the remote control / master key: Press and hold down the "**F**" key for 5 seconds, then place in the charge bracket or plug in the charging cable. The title image then reappears as the charge indicator light.
- If the master key is placed in the charge bracket during the alignment check process, it must when required be switched on using the "**ON**" key.

11 Updating the software / nominal data

No more diskettes will be sent out to any BMW authorised workshops who in the past subscribed to "**BMW KDS** (Beissbarth / Bosch)". For reasons of cost, it is no longer possible to produce these diskettes in-house on the "**DIS tester**" or on the "**TIS/EPC server**". The data are updated on the TIS-CD on a regular basis

11.1 Prerequisites

- BMW KDS (Beissbarth / Bosch)
- Program status (Beissbarth) TIS-CD: from CD 12/95
- Program status EPC: from 12/95
- Program status (Bosch) TIS-CD: from CD 08/97
- Program status DIS: from V6.0
- Diskettes, 3.5", 1,44 MB (Beissbarth 5 diskettes / Bosch 1 diskette)

11.2 Procedure (Beissbarth)

cardiagn.com

1. Go into screen mask "**Administration**"
2. Select **KDS button**
3. Select **Beissbarth**
4. After request, load "**diskette 1**" and acknowledge with "**OK**" (program diskette 1 of 2 is created, perform labelling operation)
5. After request, load "**diskette 2**" and acknowledge with "**OK**" (program diskette 2 of 2 is created, perform labelling operation)
6. After request, load "**diskette 3**" and acknowledge with "**OK**" (program diskette 1 of 3 is created, perform labelling operation)
7. After request, load "**diskette 4**" and acknowledge with "**OK**" (program diskette 2 of 3 is created, perform labelling operation)
8. After request, load "**diskette 5**" and acknowledge with "**OK**" (program diskette 3 of 3 is created, perform labelling operation)
9. Perform software update and /or nominal data input on the KDS in the usual manner using the manufactured diskettes.

11.3 Procedure (Bosch)

1. Go into screen mask "**Administration**"
2. Select **KDS button**
3. Select **Bosch**
4. Write a name on "**Diskette 3.1**", when prompted to do so, insert in the drive and confirm by pressing "**OK**" (2x) --> nominal values are then copied to the diskettes
5. Load nominal value diskette 3.1 in drive 3.1, load operating system diskette 3.0 in drive 3.0.
6. Boot device in the usual manner

Important!

When producing KDS diskettes, all data on the diskettes used are overwritten.

Note:

Whenever an error occurs, this is displayed and the program aborts. This process needs to be restarted from the very beginning, which involves deleting all data from the diskette. Possibly use a new diskette.

12. Creating, copying and editing nominal data

12.1 Copying

- Press the "**C**" button and select the vehicle which is to be copied.
- In the special function section, select menu item "**Editing of nominal data**". Set up a new vehicle record in the familiar way. Now the data input screen displays the nominal values for the previously selected vehicle. Re-enter the modified data and save the data record.

12.2 Create

- Press the "**C**" button and, in the special function, select the "**Editing of nominal data**" menu item. Set up a new vehicle record in the familiar way. An empty data input screen now appears. Enter the data and save the data record.

12.3 Edit

- Nominal data programmed in the factory cannot be deleted or changed. If these data are changed, a new vehicle record with those amended nominal data needs to be set up. New vehicle records set up by the user are designated as such in the selection menu with a "**+**". These vehicles can be deleted by the user by means of the screen button "**-**" or can be amended using the "**< >** " button. These buttons only appear on the screen if the vehicles were entered in the system by the user.

13. Special functions

13.1 Customer button for printer protocol

In the "**Special function**" menu, the "**Customer-specific text**" submenu can be called up. An input screen appears on the display. A name and address must be added to this input screen and saved by pressing the "**S**" screen button. The text entered is then imprinted in the header of the protocol / report.

13.2 Alignment options

cardiagn.com

- in the special functions (button "**S**"), call up the "**Service**" menu

- In the submenu "**alignment**", select the "**Toe-in alignment**" or the "**Toe-in adjustment**" option. The toe-in and camber alignment program guides the user step by step through the alignment process with the help of text and images. At the end of the adjustment process, the deviation in measuring value from every measuring sensor is displayed on the screen.
- These alignment values can be saved in the measuring pickup memory by pressing "**Save**" or the program can be quit by pressing the "**Red button**" without saving (a checking function). The alignment values can be printed out.

13.3 Turntable test

- in the special functions (button "**S**"), call up the "**Service**" menu
- In the "**Service**" menu, call up the "**Turntable test**" function. Rotate left and right-hand turntables and check the display on the screen. Important: The measuring range is ±306 degrees.

13.4 View and delete customer entries from the database

- In the special functions in the "**Database**" menu, call up the "**Delete**" menu option. The data input screen then appears. Fill in the search boxes with the data to be deleted.
- Using the "**-**" button, this data record can be deleted. It is now possible to use the touchscreen pen to highlight and delete a new data record.
- The screen buttons "**Arrow up**" and "**Arrow down**" enable users to scroll through the entire database.
- To quit the Delete function, press the Cancel button (red spot).

14. Internal program change

Other internal program changes were made which only slightly alter the program run, but which do optimise the alignment check in terms of comfort and speed. This is described in the following pages:

- Optimisation of compensation for lateral runout on wheel rims in relation to speed.
- Optimisation of impact routines: Marking can still be corrected within the gateway. The message "**Turntables not connected**" no longer causes this routine to terminate. Measuring can continue after the turntables have been plugged back in.
- Standardisation of screen colours with the colours on the panel.
- Extension of texts in some foreign languages.
- Elimination of program and cosmetic errors.
- Electronic water scales
- Discontinuation of wheelbase measurement

15. Faults

15.1 Tyre faults

	Error		Impact
1	Tracking, camber, toe difference angle and caster not correct	1	Serious tyre squeak, even at relatively low speeds
2	Too much toe-in or too much positive camber	2	Tyres are worn longitudinally down one outside edge
3	Too much negative camber	3	Tyre wear on inner edge

cardiagn.com

4 Worn front axle suspension points on FWD cars	4 Amplified noise / Vehicle pulls away one-sidedly when accelerating
5 Incorrect toe adjustment	5 Radial adjustment of wheel settings / tyre tread exhibits burr formation within the tread pattern
6 Play in wheel suspension caused by mechanical components (suspension, steering)	6 Washed out areas / wobbling on front wheel
7 Insufficient inflation pressure in the tyre	7 Tyre wear along outer areas

15.2 Front axle fault

Fault	Cause	Remedy
1. Toe deviation	a) Vehicle not in normal position	a) Correct ride height
	b) Tie rod(s) bent	b) Replace tie rod(s)
	c) Ball joints on track rod(s) misaligned	c) Replace tie rod(s)
	d) Rubber mount in control arm faulty	d) Replace control arms
2. Camber deviation: Camber is defined by design and cannot be adjusted.	a) Rubber mount in control arm faulty	a) Replace control arms
	b) Control arm deformed	b) Replace control arms
	c) Spring strut deformed	c) Replace spring strut
	d) Guide joint worn	d) Replace control arms
	e) Spring deflection too great	e) Replace coil spring, ride height

cardiagn.com

	f) Front axle carrier deformed	f) Replacing front axle support
	g) Spring strut shock absorber mount misshapen	g) Repair front end
	h) Distortion in floor assembly (engine carrier)	h) Repair body
3. Castor deviation: Caster is defined by design and cannot be adjusted	a) Rubber mount for tension/traction strut defective	a) Replace rubber mount
	b) Tension/traction strut misshapen	b) Replace tension/traction strut,
	c) Control arm deformed	c) Replace control arms
	d) Spring strut deformed	d) Replace spring strut
	e) Wheel house deformed (spring-strut mount)	e) Repair front end
	f) Distortion in floor assembly (engine carrier)	f) Repair body
4. Toe angle difference deviation	Prerequisite: camber and caster are correct	
	a) Tie rods not adjusted uniformly	a) Adjust toe on left and right sides to same value
5. Wheel-offset deviation	Prerequisite: front wheels have equal single toe to geometrical axis	
	a) Front axle carrier deformed	a) Replacing front axle support
	b) Engine carrier deformed	b) Repair body
	c) Control arm deformed	c) Replace control arms

cardiagn.com

	d) Tension/traction strut misshapen	d) Replace tension/traction strut

15.3 Rear axle defects

Fault	Cause	Remedy
1. Camber deviation	a) Vehicle not in normal position, spring deflection too great	a) Correct ride height
	b) Rubber mount on rear axle carrier unserviceable	b) Replace rubber mount
	c) Rear axle carrier deformed	c) Check rear-axle carrier, replace if necessary
	d) Control arm deformed	d) Check/replace control arm
	e) Traction strut misshapen	e) Check traction strut, replace if necessary
	f) Distortion in floor assembly	f) Repair body
	g) Swinging arm deformed	g) Replace swinging arm
2. Rear-wheel position incorrect	a) Rear axle carrier displaced laterally	a) Check rubber mounts on rear-axle carrier, replace if necessary
	b) Distortion in floor assembly	b) Repair body
3. Toe deviation	a) Vehicle not in normal position, i.e. spring deflection too great	a) Correct ride height
	b) Rubber mounts in rear-axle carrier faulty	b) Replace rubber mount
	c) Control arm deformed	c) Replace control arms
	d) Rubber mount and swinging arm unserviceable	d) Replace swinging arm

cardiagn.com

	e) Rear axle carrier deformed	e) Check rear-axle carrier, replace if necessary
	f) Traction strut misshapen	f) Check traction strut, replace if necessary
4. Deviation from the geometric axis	Prerequisite: rear wheel total toe value must be correct.	
	a) Distortion in floor assembly	a) Repair body

Other notes on the topic of the ”kinematics diagnosis system" can be found in the BMW KDS (Beissbarth / Bosch) operating instructions.

None of the function and system descriptions are covered by an update service. Availability of parts and scope for immediate ordering cannot be derived from this information. The specialist departments shall be in touch with the markets at an appropriate time with further details.

cardiagn.com

32 01 99 (503)

Kinematics diagnosis system and environment

BMW KDS (Beissbarth)

Table of contents

1. Foreword

1.1 Objective

1.2 Further development of the BMW kinematics diagnosis system

1.3 Technical data

1.4 Delivery specification

1.5 Required accessories

1.6 Advisable accessories

2. Measuring options with the BMW KDS

2.1 Front Axle

2.2 Rear Axle

2.3 Other rmeasuring options

3. System description

3.1 BMW KDS 1, based on the ML4000 from Beissbarth

3.2 Computer

3.3 Graphics pad

3.4 Equipment cabinet

3.5 Remote display

3.6 Measuring pickup with image sensor (CCD camera)

3.7 BMW quick-release brackets

3.8 Rotational / sliding supports

3.9 Sensor tips

3.10 Spoiler adapter

3.11 Quick-clamping units

cardiagn.com

3.12 Retaining claws
4. Work bay
4.1 Environment
4.2 Prerequisite for measurement
4.3 Measuring tolerance
4.4 Levelling of measuring point
5. Chassis-specific terms
5.1 Toe difference angle
5.2 Camber
5.3 Toe
5.4 Castor
5.5 Geometrical driving axis / symmetrical axis
5.6 Wheel offset angle
5.7 Kingpin offset / kingpin radius
6. Wheel suspension
6.1 Rigid axle
6.2 Independent suspension
7. Wheel alignment / procedure
7.1 Measuring options
7.2 Preparatory work:
7.3 Incoming / outgoing wheel alignment
7.4 Printout of the data
8. Special features
8.1 Wheel alignment with non-selective access
8.2 System setting
9. Comparison, BMW KDS (Bosch - Beissbarth)
10. Change in operation (menu)
10.1 Master key with display
10.2 Summary operating instructions
10.3 Display support
11. Software updates / nominal data
11.1 Preconditions
11.2 Procedure (Beissbarth)
11.3 Procedure (Bosch)
12. Creating, copying and editing nominal data
12.1 Copying
12.2 Creating
13.3 Editing
13. Special functions
13.1 Customer button for printer protocol
13.2 Adjustment options
13.3 Turntable test
13.4 Viewing and deleting customer entries from the database
14. Internal program change

cardiagn.com

15. Error

15.1 Tyre fault

15.2 Front axle fault

15.3 Rear axle fault

1 Preface

1.1 Objective

The complexity of wheel alignment as a topic has increased. This BMW Service Technology document is therefore intended to achieve several objectives:

- Compiling guidelines for working with the BMW KDS.
- Getting to grips with the technology of wheel alignment on modern vehicles and clarifying any questions that arise.
- Transparency and clarification of different terminology.
- Clarification of fault causes from the past, so that these can be avoided in future after studying this paper.
- Prerequisites for safe dealings with BMW KDS.

1.2 Further development of the BMW kinematics diagnosis system

- The BMW kinematics diagnosis system (KDS) forms an integral element of systems-based philosophy in relation to automotive technology. This provides the peace of mind of being able to work rationally and in a BMW-compliant manner, and the certainty of being prepared for future technological developments. With regard to precision and performance in the area of wheel alignment and chassis adjustment, BMW has done the best it can with what is technologically feasible: The BMW kinematics diagnosis system (KDS).
- The BMW kinematics diagnosis system from Beissbarth is more than just a further development of conventional axle alignment equipment. It sets new dimensions in terms of precision, performance, speed and handling. Guarantees for the perfection upon which BMW customers count in their dealings with BMW Service.
- Ride comfort, driving safety and tyre wear depend to a large extent on perfect interaction with vehicle kinematics. BMW is constantly delivering new generations of chassis and suspension to the market, each of which is superior and/or even closer to perfection than its predecessor. That means that there are fewer kinematic adjustment points on the chassis and suspension and even tighter specified tolerances with regard to wheel alignment and adjustment.
- Through the use of the multilink rear axle and the E36, the previously recommended electronic wheel alignment equipment was no longer suitable for BMW chassis alignment checks. This related to the measuring procedure as well as to the measuring accuracy. The generation of equipment approved with the introduction of the E36 range is still able today to satisfy all the requirements imposed on modern wheel alignment equipment, including the use of the latest computer technology.
- For wheel alignment purposes, only the BMW kinematics diagnosis systems from Beissbarth and Bosch may be used.

1.3 Technical data

cardiagn.com

1.	Display	- 17 inch graphics screen with high-resolution graphics (640x480 pixels with 256 colours)
2.	Teletext	- in each programmed national language
3.	Wheel sizes	- 12"...20"
4.	Vehicle memory capacity	- unlimited
5.	Turntables	- Load-carrying capacity 1000 kg, angle of rotation ± 360°, 450 x 450 x 50mm (L x B x H), sliding range ± 50 mm, weight 18 kg
6.	Sliding supports	- Load-carrying capacity 1000 kg, angle of rotation ± 10°, 450 x 450 x 50mm (L x B x H), sliding range ± 65 mm, weight 17 kg
7.	Electrical connection	- 100...115 V / 220...240 V 50/60 Hz, 0,5 kW (other connections on request)

1.4 Delivery specification

1 PC display element with graphics screen, graphics panel, equipment cabinet, small or large including automatic charging station, DIN-A4 dot matrix printer

4 Pickup with CCD camera technology and infrared data transfer, with installed voltage supply

1 Wiring harness (comprising 4 cables)

1 Brake tensioner

1 Steering wheel lock

2 Electronic precision turntable supports with integrated sensor and without approach ramp

2 Sliding supports without approach ramp

cardiagn.com

4 BMW quick-release units comprising a locating bell housing P8-68 and quick-release bracket P267 01, incl. coated retaining claws

1 Operating instructions for BMW KDS (8 languages)

1 BMW software and the BMW nominal vehicle data with adjustment images as well as texts for measurement preparations

1.5 Required accessories

2 Locking rods for positioning the vehicle

1 Set of sandbags for specified loading

1.6 Advisable accessories

4 Quick-clamping units

2 Set of collision plates

1 Remote control / display

1 Transport carriage (for ballast pockets, turntables and sliding plates, and 4 quick-release brackets)

2 Measuring options with the BMW KDS

2.1 Front axle

- Toe-in (individual wheel and total toe-in relative to the geometrical driving axis)
- Camber (when driving straight ahead)
- Wheel offset (relative to the left front wheel)
- After-run, steering axis inclination and toe difference angle

2.2 Rear axle

- Toe-in (individual wheel and total toe-in relative to the central plane of the vehicle's longitudinal axis --> previously known as the symmetrical axis)
- Geometrical driving axis
- Camber

2.3 Other rmeasuring options

- Wheel offset, rear
- Wheelbase difference
- Lateral offset, right
- Lateral offset, left
- Track width difference
- Axial offset

3. System description

3.1 BMW KDS 1, based on the ML 4000 from Beissbarth

cardiagn.com

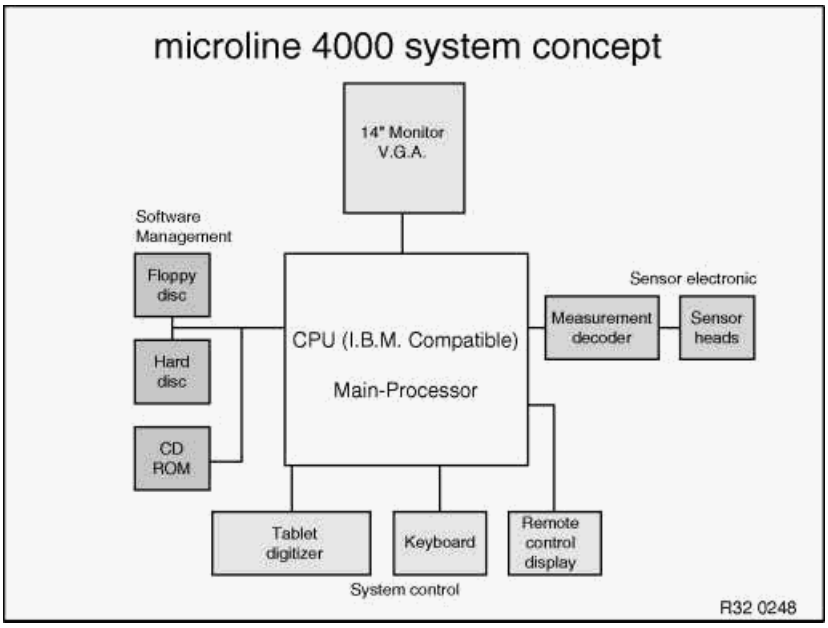

The KDS 1 is available without surcharge in a choice of two design versions:
1. Mobile workstation

2. Mobile compact cabinet

The larger workstation provides a small storage space for accessories, whereas the compact cabinet is mobile and is ideal for confined working areas. Both versions are available as a wireless measuring system (infrared). In terms of measuring technology, the only difference between these two systems is in their handling and their upgrade options. In both these versions, the four pickups are stored in integrated inserts with battery charge points. Following the automatic charging process, the accumulators on the pickups deliver enough power for 10 hours of continuous operation.

3.2 Computer

- KDS system 1 comprises tried-and-tested and thoroughly reliable industrial components. The computer is an IBM-compatible 32-bit Intel processor with CD drive, of the kind commonly used in the PC sector.

cardiagn.com

3.3 Graphics pad

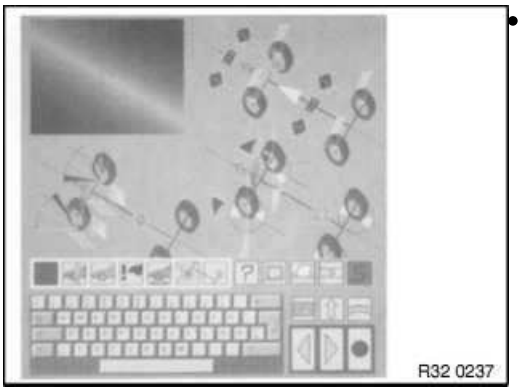

- All functions are depicted graphically on a ”Symbol" pad. The pad is protected beneath a Plexiglas panel. This is easy to replace whenever major design changes are required. The user interface has no membrane and is therefore safely protected against damage. The main functions are enabled by clicking the symbol with the sensor probe.

3.4 Equipment cabinet

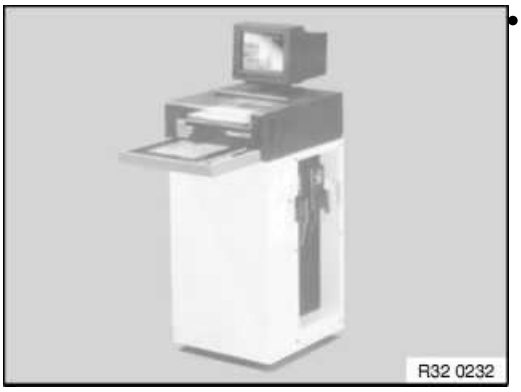

- The PC with graphics monitor and pull-out operating pad, mountings for the pickups, the remote control and the DIN-A4 printer are integrated on the workstation. The charging station is located in the cabinet and can also be connected to the pickups and remote control unit by plug-in cables (operation with simultaneous charging of the accumulators / rechargeable batteries).

3.5 Remote display

A wireless remote display unit can be provided on request. The remote control buttons are only enabled during the measurement and setting process (not in response to customer input, choice of vehicle, processing of nominal data etc.). The following displays are supported by the remote display facility:

- Measured value with nominal/actual variance comparison and tolerance bar
- Touchscreen icon for touch-sensitive routines
- Live overview of toe-in / camber values with nominal / actual comparison
- Rims, lateral runout compensation

3.6 Measuring pickup with image sensors (CCD cameras)

cardiagn.com

Each of the measuring pickups is equipped with two image sensors and its own processor for wireless infrared transmission with integrated accumulators for automatic measurement. Advantages:

- No temperature deviation
- Very high measuring resolution (theoretically, toe-in could be measured in seconds of an angle).
- Single toe-in range of more than ±9 degrees relative to constant screen display of toe-in during the replacement of track rod ends
- Exact system precision, i.e. with measurements on the vehicle following rim lateral runout compensation: an accuracy of 2 minutes of angle for toe-in and camber

3.7 BMW quick-release brackets

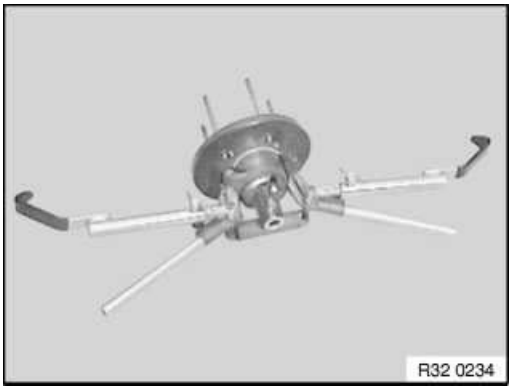

- BMW quick-release brackets for precise mounting of measuring pickups and measurement without compensation of lateral runout on rims.
- **Note:** Quick-release brackets potentially available,, e.g. from older F1600 or ML-3000 models, must not be used with the BMW KDS.

3.8 Rotational / sliding supports

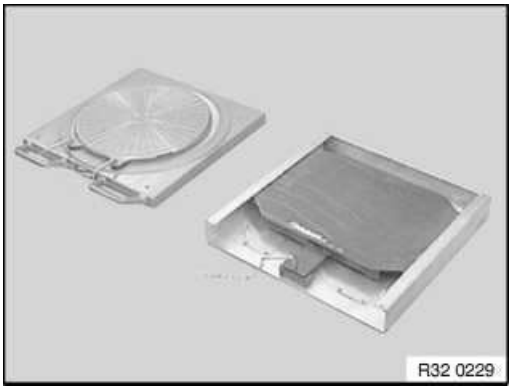

- Electronic precision turntables (rotational supports) for the front wheels with integrated sensor (360 degrees all-round measuring range)
- Robust sliding supports for the rear wheels with a swivelling / rotating upper plate.
- Accessories: Cover for aluminium rotational supports / turntables

3.9 Sensor probes

cardiagn.com

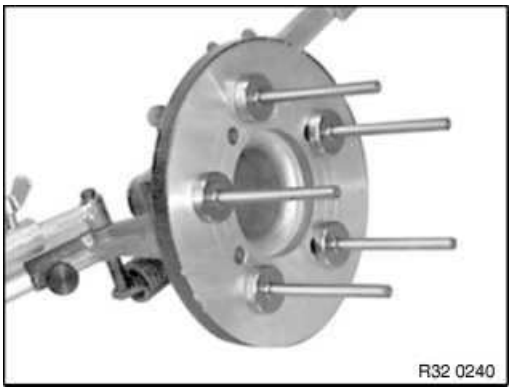

- From April 1993, a new BMW light-alloy wheel (styling No. 18) has been available as a BMW optional accessory. During vehicle alignment checks on these wheels, new sensor probes are required for the quick-release mountings on the recommended wheel alignment equipment.
- On recent deliveries of KDS 1, the new sensor probes are included in the delivery specification (order number: BS 90 19 11).

3.10 Spoiler adapters

- On vehicles with very deep spoilers, it is possible for the measuring beam between the measuring pickups to get interrupted. This is particularly true of the transverse front axle.
- In this case, the spoiler adapter acts as a connecting member between the measuring device holder and the measuring pickup. This causes the measuring pickup to be located 50 mm lower, thereby enabling the measuring beam to pass freely below the spoiler.

3.11 Quick-release mountings

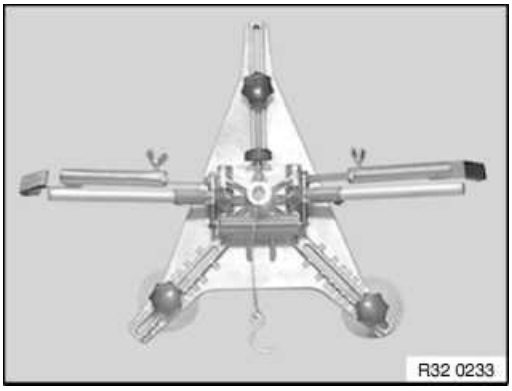

- Quick-release mountings for the wheel alignment of other vehicles with compensation of lateral runout on rims.
- Wheel rims without sensor bore holes (wheel rims for BMW vehicles made my other manufacturers)

3.12 Retaining claws

cardiagn.com

- The versatile retaining claws and the rubberised retaining claws enable an extremely wide and varied range of clamping variants to be used for the measuring equipment holder, even on exotic, i.e. extremely unusual, light-alloy rims.

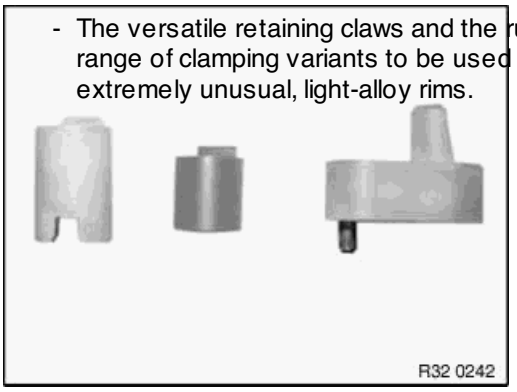

4. Workbay

4.1 Environment

Description:

All the vehicle hoists currently recommended by BMW (cf. Workshop Equipment - Planning Documentation, issue 11) for wheel alignment equipment comply with the requirements for BMW KDS.

The BMW KDS does not impose great demands on its installation location. The device can be used over inspection pits or on vehicle hoists (i.e. workshop ramps).

Prerequisites:

- Wheel alignment pits
- Telescopic mast vehicle hoists with lowering facility
- 2-stamp vehicle hoists with lowering facility
- Repair statuses with lowering facility
- One measuring station (approx. 4.5 m x 7.0 m).
- The rotational supports ('turntables') must be bolted to the vehicle hoist

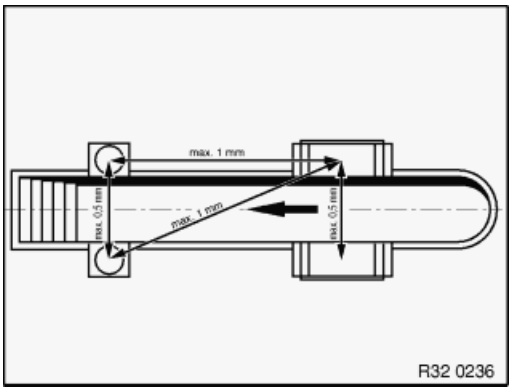

The locating surfaces for rotational and sliding plates must not exceed the maximum difference in height described below:

- from left to right ± 0.5 mm
- from front to back ± 1.0 mm
- diagonally ± 1,0 mm.

Note:

A height difference between turntables of ± 2 mm from left to right gives rise to a measuring error with camber of 4,8°.

For comparison: The camber tolerance on the E36 is ± 10'. Tyre tread difference or different inflation pressures give rise to measuring errors on the same magnitude.

4.2 Prerequisites for the wheel alignment check

During the wheel alignment check, the front and rear wheels need to be standing on the rotational and sliding

cardiagn.com

supports to enable all wheel suspension points during the touch-sensitive routine and the adjusting procedure to remain free of torsional stresses. This demonstrates the need for the rotational and sliding supports for the various wheelbases and track widths on the candidate vehicle for the wheel alignment check to be relocated.

4.3 Measuring tolerance

The full range of measuring tolerance are system tolerances. That means that the total of all individual tolerances yields the value identified in the argumenter. Example - camber: Quick-release bracket + measuring pickup + computer = 1' with a measuring range of ±3° (all BMW vehicles lie within this measuring range).

4.4 Measuring station levelling

The manufacturers of BMW KDS (Beissbarth / Bosch) are able to check the alignment of the measuring station to the required level of precision, using levelling devices to do so. Bars or hose-type water scales are not suitable. Vehicle hoists must be under load when being levelled to ensure that due account is taken of the uneven deflection in vehicle rails.

Important!

A specialist operator must be involved in the setup work on each vehicle hoist (a member of the manufacturer's Service Product Support staff).

5. Chassis-specific terms

5.1 Toe difference angle

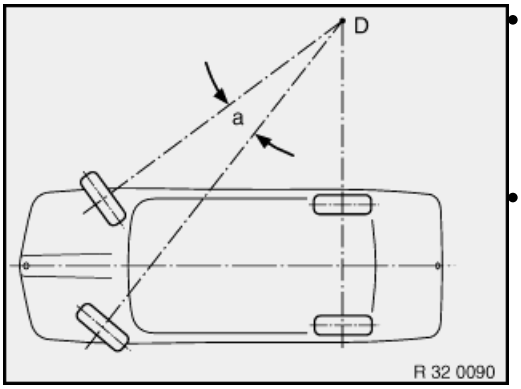

- The toe difference angle (a) is the angle setting of the inner cornering wheel relative to the outer cornering wheel when negotiating a bend in the road. Steering is designed in such a way that the relative angular positions of wheels change as steering lock progresses.
- In ideal situations, the wheel axes intersect at Point D in every steering position (except for straight ahead).

5.2 Camber

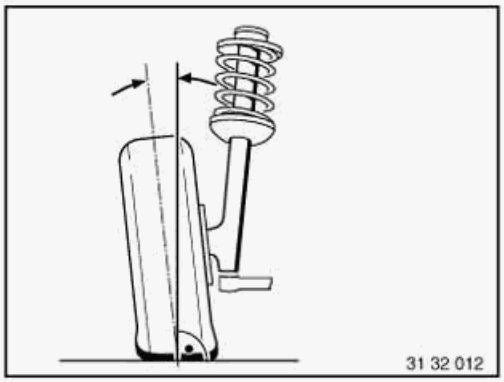

- Camber is the inclination of the wheel from the perpendicular.

5.3 Toe-in

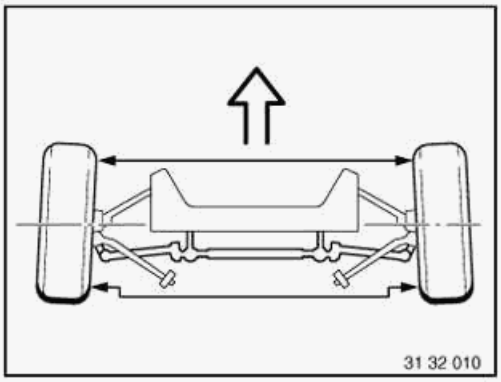

- Toe-in is the reduction in distance of front of front wheels to rear of front wheels. Toe-in prevents the wheels from moving apart when driving (wobbling and scuffing).

5.4 After-run

cardiagn.com

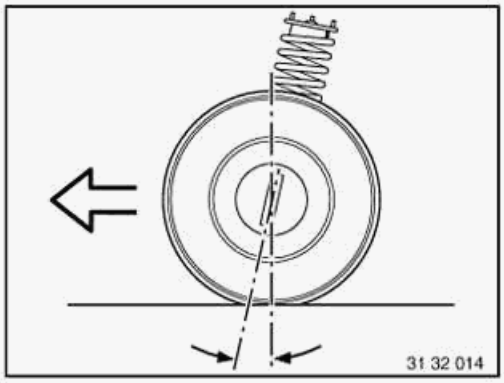

- After-run is the inclination of the kingpin viewed from the side and relative to direction of travel. The line through the centre point of the spring strut support bearing and the control arm ball joint corresponds to the "kingpin".

5.5 Geometrical driving / symmetrical axis

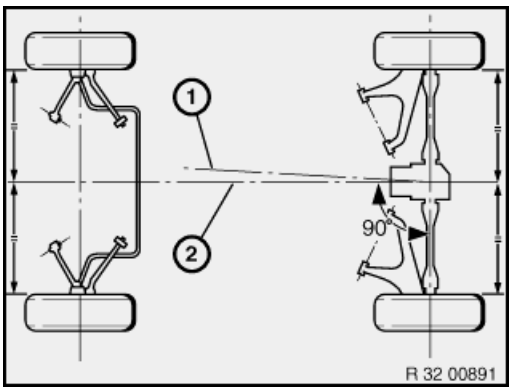

- (1) The geometrical driving axis is the angular intersection point from total toe-in on the rear wheels. Front-wheel measurements are taken in reference to this axis.
- (2) The symmetrical axis constitutes the centreline between front and rear axles.

5.6 Wheel offset angle

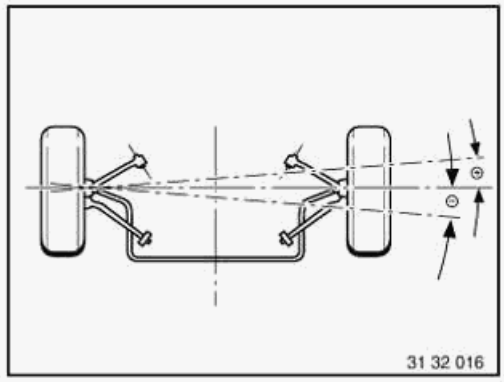

- The wheel offset angle is the angular deviation in the intersection line of wheel contact points at a line drawn at 90° to the geometrical driving axis. The wheel offset angle is positive when the right wheel is displaced towards the front and negative when it is displaced towards the rear.

5.7 Kingpin offset / kingpin radius

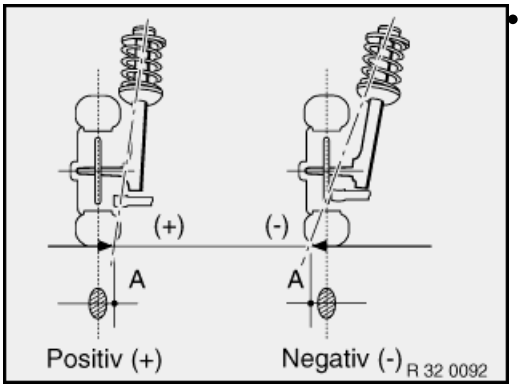

- The kingpin offset / kingpin radius is the distance from the centre of the wheel contact face to the intersection point of the extension of the kingpin axis.

6. Wheel suspension

Wheel suspension includes the components which connect the wheel to the mostly load-bearing floor pan components on the body which guide the vehicle in the desired direction. This connection involves axles or

cardiagn.com

comparable construction elements, guided by trailing arms. The type of wheel suspension is one of the determining factors governing the driving characteristics of a vehicle. A distinction is made between two main groups: 1. The rigid axle and 2. The independent suspension.

6.1 Rigid axle

Description	Advantages	Disadvantages
On the rigid axle, both wheels or pairs of wheels are connected by means of a rigid axle body. Every change in a one wheel is transferred to a greater or lesser extent to the other one. If a rigid axle has been installed, it is now only ever as a rear axle. This is sharp contrast to trucks and buses where they are used frequently.	No changes in camber and toe-in occur during suspension action. This means: low tyre wear and good directional stability.	Non-driven rear axles can also receive negative camber and this increases tyre wear.

6.2 Independent suspension

Description	Advantages	Disadvantages
Based on the modern technology standard independent suspension is available on the front and rear axles of BMW vehicles. This development was prompted by inertia mass because a reduction in unsprung masses improves wheel and ground contact, enabling the wheel to maintain better traction. The tracking of independently suspended wheels requires transverse links and trailing arms which can be called upon to absorb occasional high levels of longitudinal and lateral forces.	Independently suspended wheels do not influence one another.	Depending on design, during suspension action, changes can occur in camber, toe-in, track width, after-run and wheelbase.

7. Wheel alignment / test procedure

7.1 Measuring options

The next section itemises all the measuring options and values in an at-a-glance list (FA = front axle, RA = rear axle).

Measuring options	Measuring accuracy	with measuring range	Total measuring range
Total toe-in (FA + RA)	± 2'	± 2°	± 18°
Single wheel toe (FA + RA)	± 2'	± 2°	± 9°
Camber (FA + RA)	± 1'	± 3°	± 10°
Wheel offset (FA)	± 2'	± 2°	± 9°
Geometrical driving axis	± 2'	± 2°	± 9°
Castor	± 4'	± 18°	± 22°
Steering axis inclination	± 4'	± 18°	± 22°
Toe difference angle	± 4'	± 20°	± 20°
Maximum steering angle (FA)	± 4'	± 60°	± 300°
Maximum steering angle (RA)	± 4'	± 9°	± 9°
After-run correction range	± 4'	± 7°	± 10°

Note:

The details for the measuring accuracy only apply when using precision rotational and sliding

cardiagn.com

supports together with BMW quick release brackets.

7.2 Preparatory work:

Before the measurement can commence, preparatory work is required at the measuring station and on the vehicle (see BMW KDS, operating instructions). This preparatory work includes:

- Ease-of-movement of rotational and sliding plates
- Alignment of rotational and sliding supports to suit track width and wheelbase
- Driving of vehicle centrally onto the supports
- Apply parking brake
- Remove locking pins from the supports to prevent torsional stresses in the chassis and suspension when subjecting the vehicle to load.
- Check the wheel rim and tyre size, tread depth, inflation pressure, steering backlash, wheel bearings and condition of the suspension and shock absorbers
- Secure measuring device bracket to the wheels
- Load vehicle acc. to BMW KDS specification
- Apply sudden load to vehicle with brakes released to obtain a stable centre position.
- Secure the service brake by applying the brake tensioner

7.3 Input / output measurement

This measurement can be conducted as a program-guided measurement check, just like any subsequent adjustment work and the ensuing outgoing alignment check. The sequence of chassis and suspension measuring points to be called up and checked by the systems software. The individual procedural steps cover:

- driving in a straight line to obtain an accurate record of the toe-in and camber value for the rear axle
- touch-sensitive routine to determine after-run, steering axis inclination and toe difference angle
- Recording of toe-in and camber of front axle (prior to this, set the steering centrepoint)
- touch-sensitive routine to measure the maximum steering angle on left and right sides
- Checking the measuring value summary with nominal / actual comparison of all measured values.

7.4 Printout of the data

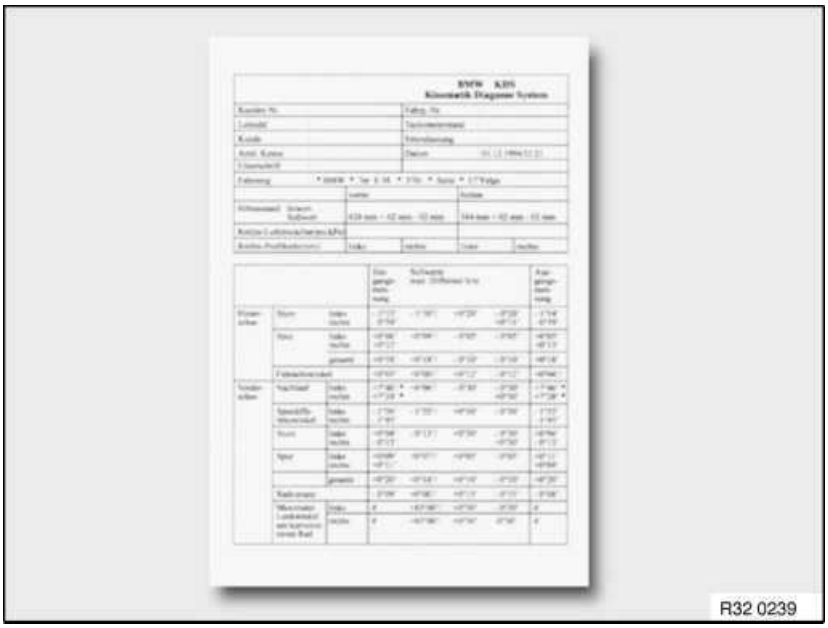

The report printout from the integrated DIN-A4 printer is subdivided into three areas:

- Headers with customer and vehicle identification data --> here, the customer data entered before the start of measuring work are printed out together with the vehicle data.
- Centre section with vehicle data --> these include brand, type, model and model year of the vehicle, as defined during selection of the nominal data record. Furthermore, this section involves printing out the previously measured values for ride height, inflation pressure and tread depth.

cardiagn.com

- The final section with all chassis and suspension measuring values comprises 3 columns: incoming wheel alignment check, nominal values and outgoing measurement. The measured values are recorded separately in these 3 columns.

8. Special features

8.1 Wheel alignment with non-selective access

During wheel alignment checks with non-selective access, the selection and sequence of measuring points can be made in any desired order. When doing this, the following points must be observed in order to achieve the correct measuring results:

- Carry out all work as defined during the program-guided wheel alignment check.
- Before the alignment check of toe-in and camber values on the rear axle, the steering must be set in its 'straight-ahead' position to ensure that it is aligned with the vehicle's centre axis.
- Prior to the alignment check of individual toe-in values on the front axle, the steering wheel centre position needs to be determined to ensure that the steering wheel is in its correct position.

8.2 System settings

The following settings only need to be entered and set once: language, display format, date/time, promotional text, remote control with display, selection of rotary plate and printer setting. These remain saved in memory.

9. Comparison, BMW KDS (Bosch - Beissbarth)

	Bosch	Beissbarth
Recording of measuring values	Infrared	Image sensor
Data transmission	Cable	Infrared / cable
Voltage supply to the pickups	Cable	Accumulator / cable
Master key	Infrared	Infrared
Master key with measuring value display	Cable	Infrared
Nominal data memory	Disk	Hard disk
Measuring value memory	Always the last vehicle measured	unlimited vehicle memory capacity
Operating system	---	MS-DOS
Languages	English and one language on order	EN, DE, NI, SV, IT, FR, SP (other languages on request)
Update	3.5" diskette	3.5" diskette from TIS/DIS
Monitor	20"	17"
Computer	---	Pentium
Drives	2 x diskette	1 x diskette, 1 x CD-Rom

10 Change in operation (menu)

10.1 Master key with display

The process of enabling the master key with display is described in the following procedural steps:

1. in the special functions (button ”**S**"), call up the ”**Service**" menu
2. In the”**Service**" menu, call up the ”**Master key**" submenu
3. In the ”**Master key**" submenu, select the ”**Master key with display**" point - this is a once-only setting.

Important!

On devices without master key, this setting must be set to ”**No master key**".

10.2 Summary of operating instructions

1. Switch on the master key by pressing the ”**ON**" button (it is permissible to switch this on during the alignment check). The title screen then appears on the LCD.

cardiagn.com

2. On the measuring equipment cabinet, select "**Straight-ahead driving**" for the "**Incoming alignment check**", then "**Adjusting procedure**" or the "**Outgoing alignment check**". The following graphic appears on the LCD monitor for "**Driving straight ahead**".
3. Pressing the "**Forwards arrow**" calls up the next measuring screen. What next appears on the LCD display blocks are a designation of the measured value and a tolerance bar with measured value. If that measured value is within tolerance, this is depicted with black numerals on a light background. If that measured value lies outside the tolerance, it is then displayed in inverted fashion (i.e. light numerals on a dark background).
4. Pressing the "**F**" button briefly makes it possible to alternate between the designation of the measured value and the nominal value with tolerance within the display block.
5. To scroll onwards through the measured values, press the "**Forward arrow**", "**Backward arrow**" and the "**Cancel" keys (red spot)** . The function of this button is identical to that of the buttons/keys on the graphics pad.
6. Even when opting for the "**Alignment check with non-selective access**", the measured values can be chosen in the same way as for the "program-guided alignment check" process.
7. Using the "**Printer**" button enables reports to be printed out during the alignment check. The remote control buttons are only enabled during the measurement and setting process (not in response to customer input, choice of vehicle, etc.).

10.3 Display support

- Measured values with nominal/actual comparison and tolerance bar (nominal values can be displayed by pressing the "**F**" key/button)
- Touchscreen icon for touch-sensitive routines
- Summary of measured values with the latest nominal / actual comparison
- Compensation for lateral runout on wheel rims
- With all other functions (e.g. customer input), the title image appears on the liquid crystal display

Note:

Whenever data transfer from the master key / remote control to the computer is interrupted, the master key icon in the lower right-hand corner of the screen changes colour from green to red and the image on the LCD display is depicted in inverted format, i.e. black becomes white and vice versa. This changeover does not occur in the title image. Once visual connection is re-established, the master key recommences work at the point in the program where the interruption occurred. Continuous visual connection during the alignment check is therefore not necessary.

- The "**Egg timer**" icon on the LCD display indicates: "**Please wait**".
- The "**Battery**" icon in the upper right-hand corner of the LCD display indicates that the battery reserve has been reached.
- Switching off the remote control / master key: Press and hold down the "**F**" key for 5 seconds, then place in the charge bracket or plug in the charging cable. The title image then reappears as the charge indicator light.
- If the master key is placed in the charge bracket during the alignment check process, it must when required be switched on using the "**ON**" key.

11 Updating the software / nominal data

No more diskettes will be sent out to any BMW authorised workshops who in the past subscribed to "**BMW KDS** (Beissbarth / Bosch)". For reasons of cost, it is no longer possible to produce these diskettes in-house on the "**DIS tester**" or on the "**TIS/EPC server**". The data are updated on the TIS-CD on a regular basis

11.1 Prerequisites

- BMW KDS (Beissbarth / Bosch)
- Program status (Beissbarth) TIS-CD: from CD 12/95
- Program status EPC: from 12/95
- Program status (Bosch) TIS-CD: from CD 08/97
- Program status DIS: from V6.0
- Diskettes, 3.5", 1,44 MB (Beissbarth 5 diskettes / Bosch 1 diskette)

11.2 Procedure (Beissbarth)

cardiagn.com

1. Go into screen mask "**Administration**"
2. Select **KDS button**
3. Select **Beissbarth**
4. After request, load "**diskette 1**" and acknowledge with "**OK**" (program diskette 1 of 2 is created, perform labelling operation)
5. After request, load "**diskette 2**" and acknowledge with "**OK**" (program diskette 2 of 2 is created, perform labelling operation)
6. After request, load "**diskette 3**" and acknowledge with "**OK**" (program diskette 1 of 3 is created, perform labelling operation)
7. After request, load "**diskette 4**" and acknowledge with "**OK**" (program diskette 2 of 3 is created, perform labelling operation)
8. After request, load "**diskette 5**" and acknowledge with "**OK**" (program diskette 3 of 3 is created, perform labelling operation)
9. Perform software update and /or nominal data input on the KDS in the usual manner using the manufactured diskettes.

11.3 Procedure (Bosch)

1. Go into screen mask "**Administration**"
2. Select **KDS button**
3. Select **Bosch**
4. Write a name on "**Diskette 3.1**", when prompted to do so, insert in the drive and confirm by pressing "**OK**" (2x) --> nominal values are then copied to the diskettes
5. Load nominal value diskette 3.1 in drive 3.1, load operating system diskette 3.0 in drive 3.0.
6. Boot device in the usual manner

Important!

When producing KDS diskettes, all data on the diskettes used are overwritten.

Note:

Whenever an error occurs, this is displayed and the program aborts. This process needs to be restarted from the very beginning, which involves deleting all data from the diskette. Possibly use a new diskette.

12. Creating, copying and editing nominal data

12.1 Copying

- Press the "**C**" button and select the vehicle which is to be copied.
- In the special function section, select menu item "**Editing of nominal data**". Set up a new vehicle record in the familiar way. Now the data input screen displays the nominal values for the previously selected vehicle. Re-enter the modified data and save the data record.

12.2 Create

- Press the "**C**" button and, in the special function, select the "**Editing of nominal data**" menu item. Set up a new vehicle record in the familiar way. An empty data input screen now appears. Enter the data and save the data record.

12.3 Edit

- Nominal data programmed in the factory cannot be deleted or changed. If these data are changed, a new vehicle record with those amended nominal data needs to be set up. New vehicle records set up by the user are designated as such in the selection menu with a "**+**". These vehicles can be deleted by the user by means of the screen button "**-**" or can be amended using the "**< >** " button. These buttons only appear on the screen if the vehicles were entered in the system by the user.

13. Special functions

13.1 Customer button for printer protocol

In the "**Special function**" menu, the "**Customer-specific text**" submenu can be called up. An input screen appears on the display. A name and address must be added to this input screen and saved by pressing the "**S**" screen button. The text entered is then imprinted in the header of the protocol / report.

13.2 Alignment options

cardiagn.com

- in the special functions (button "**S**"), call up the "**Service**" menu

- In the submenu "**alignment**", select the "**Toe-in alignment**" or the "**Toe-in adjustment**" option. The toe-in and camber alignment program guides the user step by step through the alignment process with the help of text and images. At the end of the adjustment process, the deviation in measuring value from every measuring sensor is displayed on the screen.
- These alignment values can be saved in the measuring pickup memory by pressing "**Save**" or the program can be quit by pressing the "**Red button**" without saving (a checking function). The alignment values can be printed out.

13.3 Turntable test

- in the special functions (button "**S**"), call up the "**Service**" menu
- In the "**Service**" menu, call up the "**Turntable test**" function. Rotate left and right-hand turntables and check the display on the screen. Important: The measuring range is ±306 degrees.

13.4 View and delete customer entries from the database

- In the special functions in the "**Database**" menu, call up the "**Delete**" menu option. The data input screen then appears. Fill in the search boxes with the data to be deleted.
- Using the "**-**" button, this data record can be deleted. It is now possible to use the touchscreen pen to highlight and delete a new data record.
- The screen buttons "**Arrow up**" and "**Arrow down**" enable users to scroll through the entire database.
- To quit the Delete function, press the Cancel button (red spot).

14. Internal program change

Other internal program changes were made which only slightly alter the program run, but which do optimise the alignment check in terms of comfort and speed. This is described in the following pages:

- Optimisation of compensation for lateral runout on wheel rims in relation to speed.
- Optimisation of impact routines: Marking can still be corrected within the gateway. The message "**Turntables not connected**" no longer causes this routine to terminate. Measuring can continue after the turntables have been plugged back in.
- Standardisation of screen colours with the colours on the panel.
- Extension of texts in some foreign languages.
- Elimination of program and cosmetic errors.
- Electronic water scales
- Discontinuation of wheelbase measurement

15. Faults

15.1 Tyre faults

	Error		Impact
1	Tracking, camber, toe difference angle and caster not correct	1	Serious tyre squeak, even at relatively low speeds
2	Too much toe-in or too much positive camber	2	Tyres are worn longitudinally down one outside edge
3	Too much negative camber	3	Tyre wear on inner edge

cardiagn.com

4 Worn front axle suspension points on FWD cars	4 Amplified noise / Vehicle pulls away one-sidedly when accelerating
5 Incorrect toe adjustment	5 Radial adjustment of wheel settings / tyre tread exhibits burr formation within the tread pattern
6 Play in wheel suspension caused by mechanical components (suspension, steering)	6 Washed out areas / wobbling on front wheel
7 Insufficient inflation pressure in the tyre	7 Tyre wear along outer areas

15.2 Front axle fault

Fault	Cause	Remedy
1. Toe deviation	a) Vehicle not in normal position	a) Correct ride height
	b) Tie rod(s) bent	b) Replace tie rod(s)
	c) Ball joints on track rod(s) misaligned	c) Replace tie rod(s)
	d) Rubber mount in control arm faulty	d) Replace control arms
2. Camber deviation: Camber is defined by design and cannot be adjusted.	a) Rubber mount in control arm faulty	a) Replace control arms
	b) Control arm deformed	b) Replace control arms
	c) Spring strut deformed	c) Replace spring strut
	d) Guide joint worn	d) Replace control arms
	e) Spring deflection too great	e) Replace coil spring, ride height

cardiagn.com

	f) Front axle carrier deformed	f) Replacing front axle support
	g) Spring strut shock absorber mount misshapen	g) Repair front end
	h) Distortion in floor assembly (engine carrier)	h) Repair body
3. Castor deviation: Caster is defined by design and cannot be adjusted	a) Rubber mount for tension/traction strut defective	a) Replace rubber mount
	b) Tension/traction strut misshapen	b) Replace tension/traction strut,
	c) Control arm deformed	c) Replace control arms
	d) Spring strut deformed	d) Replace spring strut
	e) Wheel house deformed (spring-strut mount)	e) Repair front end
	f) Distortion in floor assembly (engine carrier)	f) Repair body
4. Toe angle difference deviation	Prerequisite: camber and caster are correct	
	a) Tie rods not adjusted uniformly	a) Adjust toe on left and right sides to same value
5. Wheel-offset deviation	Prerequisite: front wheels have equal single toe to geometrical axis	
	a) Front axle carrier deformed	a) Replacing front axle support
	b) Engine carrier deformed	b) Repair body
	c) Control arm deformed	c) Replace control arms

cardiagn.com

	d) Tension/traction strut misshapen	d) Replace tension/traction strut

15.3 Rear axle defects

Fault	Cause	Remedy
1. Camber deviation	a) Vehicle not in normal position, spring deflection too great	a) Correct ride height
	b) Rubber mount on rear axle carrier unserviceable	b) Replace rubber mount
	c) Rear axle carrier deformed	c) Check rear-axle carrier, replace if necessary
	d) Control arm deformed	d) Check/replace control arm
	e) Traction strut misshapen	e) Check traction strut, replace if necessary
	f) Distortion in floor assembly	f) Repair body
	g) Swinging arm deformed	g) Replace swinging arm
2. Rear-wheel position incorrect	a) Rear axle carrier displaced laterally	a) Check rubber mounts on rear-axle carrier, replace if necessary
	b) Distortion in floor assembly	b) Repair body
3. Toe deviation	a) Vehicle not in normal position, i.e. spring deflection too great	a) Correct ride height
	b) Rubber mounts in rear-axle carrier faulty	b) Replace rubber mount
	c) Control arm deformed	c) Replace control arms
	d) Rubber mount and swinging arm unserviceable	d) Replace swinging arm

cardiagn.com

	e) Rear axle carrier deformed	e) Check rear-axle carrier, replace if necessary
	f) Traction strut misshapen	f) Check traction strut, replace if necessary
4. Deviation from the geometric axis	Prerequisite: rear wheel total toe value must be correct.	
	a) Distortion in floor assembly	a) Repair body

Other notes on the topic of the ”kinematics diagnosis system" can be found in the BMW KDS (Beissbarth / Bosch) operating instructions.

None of the function and system descriptions are covered by an update service. Availability of parts and scope for immediate ordering cannot be derived from this information. The specialist departments shall be in touch with the markets at an appropriate time with further details.

cardiagn.com

32 01 99 (503)

Kinematics diagnosis system and environment

BMW KDS (Beissbarth)

Table of contents

1. Foreword

1.1 Objective

1.2 Further development of the BMW kinematics diagnosis system

1.3 Technical data

1.4 Delivery specification

1.5 Required accessories

1.6 Advisable accessories

2. Measuring options with the BMW KDS

2.1 Front Axle

2.2 Rear Axle

2.3 Other rmeasuring options

3. System description

3.1 BMW KDS 1, based on the ML4000 from Beissbarth

3.2 Computer

3.3 Graphics pad

3.4 Equipment cabinet

3.5 Remote display

3.6 Measuring pickup with image sensor (CCD camera)

3.7 BMW quick-release brackets

3.8 Rotational / sliding supports

3.9 Sensor tips

3.10 Spoiler adapter

3.11 Quick-clamping units

cardiagn.com

3.12 Retaining claws
4. Work bay
4.1 Environment
4.2 Prerequisite for measurement
4.3 Measuring tolerance
4.4 Levelling of measuring point
5. Chassis-specific terms
5.1 Toe difference angle
5.2 Camber
5.3 Toe
5.4 Castor
5.5 Geometrical driving axis / symmetrical axis
5.6 Wheel offset angle
5.7 Kingpin offset / kingpin radius
6. Wheel suspension
6.1 Rigid axle
6.2 Independent suspension
7. Wheel alignment / procedure
7.1 Measuring options
7.2 Preparatory work:
7.3 Incoming / outgoing wheel alignment
7.4 Printout of the data
8. Special features
8.1 Wheel alignment with non-selective access
8.2 System setting
9. Comparison, BMW KDS (Bosch - Beissbarth)
10. Change in operation (menu)
10.1 Master key with display
10.2 Summary operating instructions
10.3 Display support
11. Software updates / nominal data
11.1 Preconditions
11.2 Procedure (Beissbarth)
11.3 Procedure (Bosch)
12. Creating, copying and editing nominal data
12.1 Copying
12.2 Creating
13.3 Editing
13. Special functions
13.1 Customer button for printer protocol
13.2 Adjustment options
13.3 Turntable test
13.4 Viewing and deleting customer entries from the database
14. Internal program change

cardiagn.com

15. Error

15.1 Tyre fault

15.2 Front axle fault

15.3 Rear axle fault

1 Preface

1.1 Objective

The complexity of wheel alignment as a topic has increased. This BMW Service Technology document is therefore intended to achieve several objectives:

- Compiling guidelines for working with the BMW KDS.
- Getting to grips with the technology of wheel alignment on modern vehicles and clarifying any questions that arise.
- Transparency and clarification of different terminology.
- Clarification of fault causes from the past, so that these can be avoided in future after studying this paper.
- Prerequisites for safe dealings with BMW KDS.

1.2 Further development of the BMW kinematics diagnosis system

- The BMW kinematics diagnosis system (KDS) forms an integral element of systems-based philosophy in relation to automotive technology. This provides the peace of mind of being able to work rationally and in a BMW-compliant manner, and the certainty of being prepared for future technological developments. With regard to precision and performance in the area of wheel alignment and chassis adjustment, BMW has done the best it can with what is technologically feasible: The BMW kinematics diagnosis system (KDS).
- The BMW kinematics diagnosis system from Beissbarth is more than just a further development of conventional axle alignment equipment. It sets new dimensions in terms of precision, performance, speed and handling. Guarantees for the perfection upon which BMW customers count in their dealings with BMW Service.
- Ride comfort, driving safety and tyre wear depend to a large extent on perfect interaction with vehicle kinematics. BMW is constantly delivering new generations of chassis and suspension to the market, each of which is superior and/or even closer to perfection than its predecessor. That means that there are fewer kinematic adjustment points on the chassis and suspension and even tighter specified tolerances with regard to wheel alignment and adjustment.
- Through the use of the multilink rear axle and the E36, the previously recommended electronic wheel alignment equipment was no longer suitable for BMW chassis alignment checks. This related to the measuring procedure as well as to the measuring accuracy. The generation of equipment approved with the introduction of the E36 range is still able today to satisfy all the requirements imposed on modern wheel alignment equipment, including the use of the latest computer technology.
- For wheel alignment purposes, only the BMW kinematics diagnosis systems from Beissbarth and Bosch may be used.

1.3 Technical data

cardiagn.com

1.	Display	- 17 inch graphics screen with high-resolution graphics (640x480 pixels with 256 colours)
2.	Teletext	- in each programmed national language
3.	Wheel sizes	- 12"...20"
4.	Vehicle memory capacity	- unlimited
5.	Turntables	- Load-carrying capacity 1000 kg, angle of rotation ± 360°, 450 x 450 x 50mm (L x B x H), sliding range ± 50 mm, weight 18 kg
6.	Sliding supports	- Load-carrying capacity 1000 kg, angle of rotation ± 10°, 450 x 450 x 50mm (L x B x H), sliding range ± 65 mm, weight 17 kg
7.	Electrical connection	- 100...115 V / 220...240 V 50/60 Hz, 0,5 kW (other connections on request)

1.4 Delivery specification

1 PC display element with graphics screen, graphics panel, equipment cabinet, small or large including automatic charging station, DIN-A4 dot matrix printer

4 Pickup with CCD camera technology and infrared data transfer, with installed voltage supply

1 Wiring harness (comprising 4 cables)

1 Brake tensioner

1 Steering wheel lock

2 Electronic precision turntable supports with integrated sensor and without approach ramp

2 Sliding supports without approach ramp

cardiagn.com

4 BMW quick-release units comprising a locating bell housing P8-68 and quick-release bracket P267 01, incl. coated retaining claws

1 Operating instructions for BMW KDS (8 languages)

1 BMW software and the BMW nominal vehicle data with adjustment images as well as texts for measurement preparations

1.5 Required accessories

2 Locking rods for positioning the vehicle

1 Set of sandbags for specified loading

1.6 Advisable accessories

4 Quick-clamping units

2 Set of collision plates

1 Remote control / display

1 Transport carriage (for ballast pockets, turntables and sliding plates, and 4 quick-release brackets)

2 Measuring options with the BMW KDS

2.1 Front axle

- Toe-in (individual wheel and total toe-in relative to the geometrical driving axis)
- Camber (when driving straight ahead)
- Wheel offset (relative to the left front wheel)
- After-run, steering axis inclination and toe difference angle

2.2 Rear axle

- Toe-in (individual wheel and total toe-in relative to the central plane of the vehicle's longitudinal axis --> previously known as the symmetrical axis)
- Geometrical driving axis
- Camber

2.3 Other rmeasuring options

- Wheel offset, rear
- Wheelbase difference
- Lateral offset, right
- Lateral offset, left
- Track width difference
- Axial offset

3. System description

3.1 BMW KDS 1, based on the ML 4000 from Beissbarth

cardiagn.com

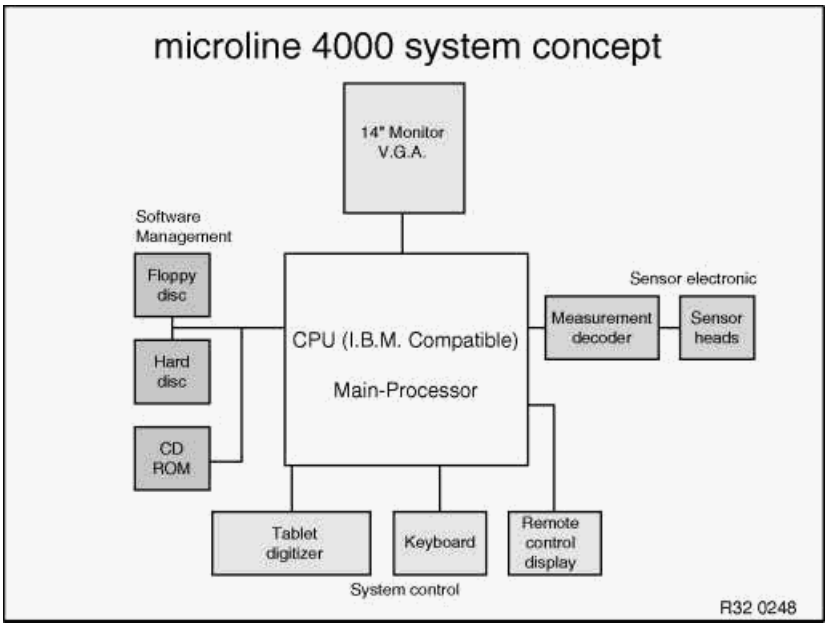

The KDS 1 is available without surcharge in a choice of two design versions:
1. Mobile workstation

2. Mobile compact cabinet

The larger workstation provides a small storage space for accessories, whereas the compact cabinet is mobile and is ideal for confined working areas. Both versions are available as a wireless measuring system (infrared). In terms of measuring technology, the only difference between these two systems is in their handling and their upgrade options. In both these versions, the four pickups are stored in integrated inserts with battery charge points. Following the automatic charging process, the accumulators on the pickups deliver enough power for 10 hours of continuous operation.

3.2 Computer

- KDS system 1 comprises tried-and-tested and thoroughly reliable industrial components. The computer is an IBM-compatible 32-bit Intel processor with CD drive, of the kind commonly used in the PC sector.

cardiagn.com

3.3 Graphics pad

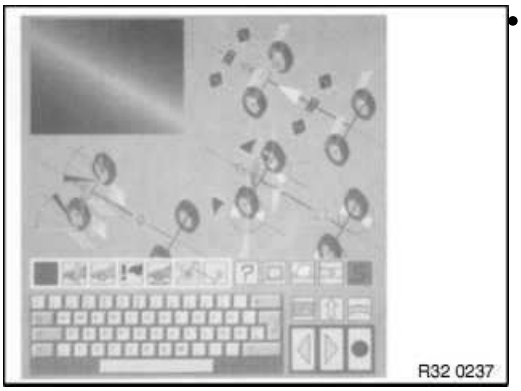

- All functions are depicted graphically on a ”Symbol" pad. The pad is protected beneath a Plexiglas panel. This is easy to replace whenever major design changes are required. The user interface has no membrane and is therefore safely protected against damage. The main functions are enabled by clicking the symbol with the sensor probe.

3.4 Equipment cabinet

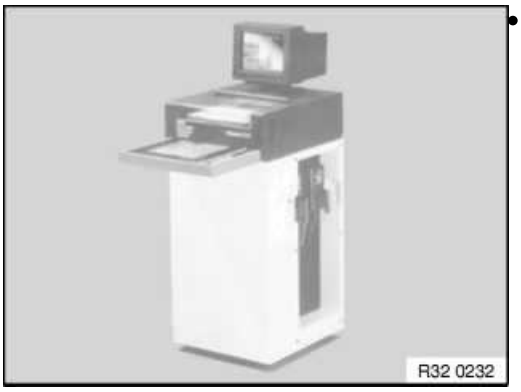

- The PC with graphics monitor and pull-out operating pad, mountings for the pickups, the remote control and the DIN-A4 printer are integrated on the workstation. The charging station is located in the cabinet and can also be connected to the pickups and remote control unit by plug-in cables (operation with simultaneous charging of the accumulators / rechargeable batteries).

3.5 Remote display

A wireless remote display unit can be provided on request. The remote control buttons are only enabled during the measurement and setting process (not in response to customer input, choice of vehicle, processing of nominal data etc.). The following displays are supported by the remote display facility:

- Measured value with nominal/actual variance comparison and tolerance bar
- Touchscreen icon for touch-sensitive routines
- Live overview of toe-in / camber values with nominal / actual comparison
- Rims, lateral runout compensation

3.6 Measuring pickup with image sensors (CCD cameras)

cardiagn.com

Each of the measuring pickups is equipped with two image sensors and its own processor for wireless infrared transmission with integrated accumulators for automatic measurement. Advantages:

- No temperature deviation
- Very high measuring resolution (theoretically, toe-in could be measured in seconds of an angle).
- Single toe-in range of more than ±9 degrees relative to constant screen display of toe-in during the replacement of track rod ends
- Exact system precision, i.e. with measurements on the vehicle following rim lateral runout compensation: an accuracy of 2 minutes of angle for toe-in and camber

3.7 BMW quick-release brackets

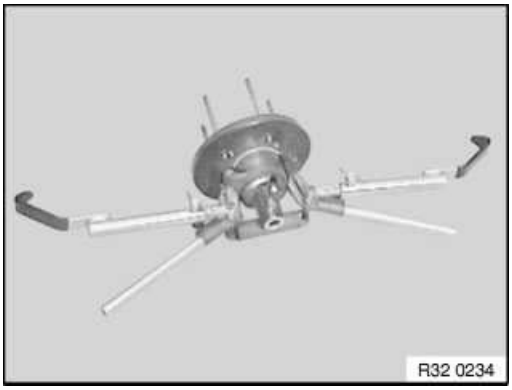

- BMW quick-release brackets for precise mounting of measuring pickups and measurement without compensation of lateral runout on rims.
- **Note:** Quick-release brackets potentially available,, e.g. from older F1600 or ML-3000 models, must not be used with the BMW KDS.

3.8 Rotational / sliding supports

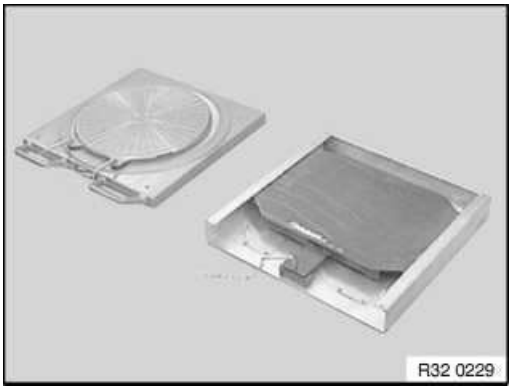

- Electronic precision turntables (rotational supports) for the front wheels with integrated sensor (360 degrees all-round measuring range)
- Robust sliding supports for the rear wheels with a swivelling / rotating upper plate.
- Accessories: Cover for aluminium rotational supports / turntables

3.9 Sensor probes

cardiagn.com

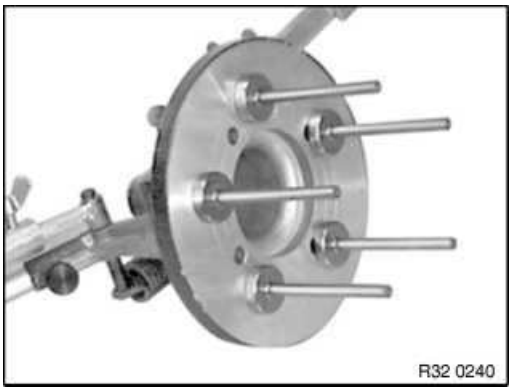

- From April 1993, a new BMW light-alloy wheel (styling No. 18) has been available as a BMW optional accessory. During vehicle alignment checks on these wheels, new sensor probes are required for the quick-release mountings on the recommended wheel alignment equipment.
- On recent deliveries of KDS 1, the new sensor probes are included in the delivery specification (order number: BS 90 19 11).

3.10 Spoiler adapters

- On vehicles with very deep spoilers, it is possible for the measuring beam between the measuring pickups to get interrupted. This is particularly true of the transverse front axle.
- In this case, the spoiler adapter acts as a connecting member between the measuring device holder and the measuring pickup. This causes the measuring pickup to be located 50 mm lower, thereby enabling the measuring beam to pass freely below the spoiler.

3.11 Quick-release mountings

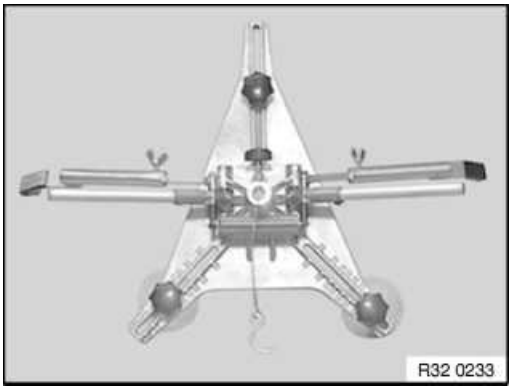

- Quick-release mountings for the wheel alignment of other vehicles with compensation of lateral runout on rims.
- Wheel rims without sensor bore holes (wheel rims for BMW vehicles made my other manufacturers)

3.12 Retaining claws

cardiagn.com

- The versatile retaining claws and the rubberised retaining claws enable an extremely wide and varied range of clamping variants to be used for the measuring equipment holder, even on exotic, i.e. extremely unusual, light-alloy rims.

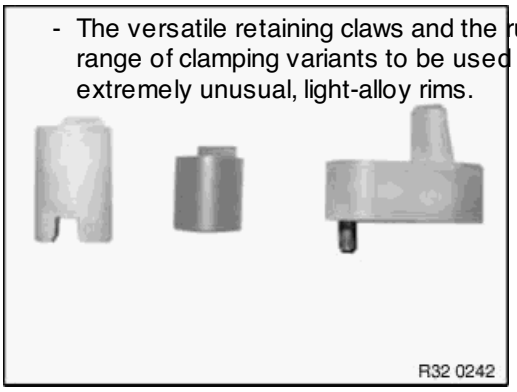

4. Workbay

4.1 Environment

Description:

All the vehicle hoists currently recommended by BMW (cf. Workshop Equipment - Planning Documentation, issue 11) for wheel alignment equipment comply with the requirements for BMW KDS.

The BMW KDS does not impose great demands on its installation location. The device can be used over inspection pits or on vehicle hoists (i.e. workshop ramps).

Prerequisites:

- Wheel alignment pits
- Telescopic mast vehicle hoists with lowering facility
- 2-stamp vehicle hoists with lowering facility
- Repair statuses with lowering facility
- One measuring station (approx. 4.5 m x 7.0 m).
- The rotational supports ('turntables') must be bolted to the vehicle hoist

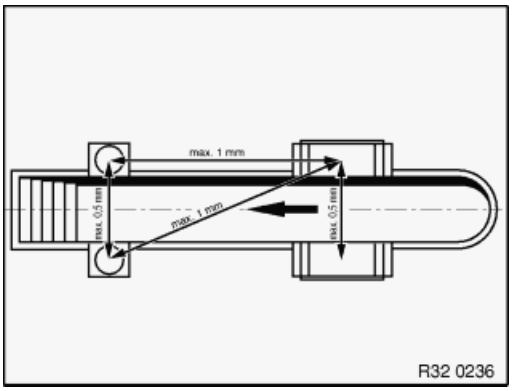

The locating surfaces for rotational and sliding plates must not exceed the maximum difference in height described below:

- from left to right ± 0.5 mm
- from front to back ± 1.0 mm
- diagonally ± 1,0 mm.

Note:

A height difference between turntables of ± 2 mm from left to right gives rise to a measuring error with camber of 4,8°.

For comparison: The camber tolerance on the E36 is ± 10'. Tyre tread difference or different inflation pressures give rise to measuring errors on the same magnitude.

4.2 Prerequisites for the wheel alignment check

During the wheel alignment check, the front and rear wheels need to be standing on the rotational and sliding

cardiagn.com

supports to enable all wheel suspension points during the touch-sensitive routine and the adjusting procedure to remain free of torsional stresses. This demonstrates the need for the rotational and sliding supports for the various wheelbases and track widths on the candidate vehicle for the wheel alignment check to be relocated.

4.3 Measuring tolerance

The full range of measuring tolerance are system tolerances. That means that the total of all individual tolerances yields the value identified in the argumenter. Example - camber: Quick-release bracket + measuring pickup + computer = 1' with a measuring range of ±3° (all BMW vehicles lie within this measuring range).

4.4 Measuring station levelling

The manufacturers of BMW KDS (Beissbarth / Bosch) are able to check the alignment of the measuring station to the required level of precision, using levelling devices to do so. Bars or hose-type water scales are not suitable. Vehicle hoists must be under load when being levelled to ensure that due account is taken of the uneven deflection in vehicle rails.

Important!

A specialist operator must be involved in the setup work on each vehicle hoist (a member of the manufacturer's Service Product Support staff).

5. Chassis-specific terms

5.1 Toe difference angle

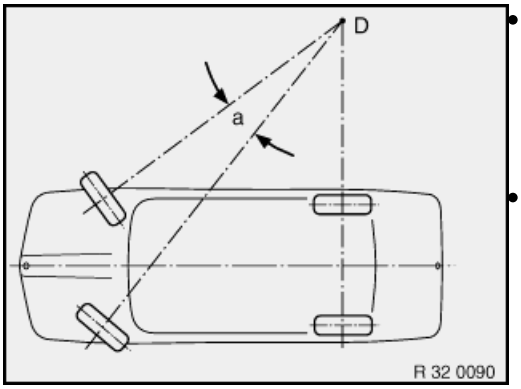

- The toe difference angle (a) is the angle setting of the inner cornering wheel relative to the outer cornering wheel when negotiating a bend in the road. Steering is designed in such a way that the relative angular positions of wheels change as steering lock progresses.
- In ideal situations, the wheel axes intersect at Point D in every steering position (except for straight ahead).

5.2 Camber

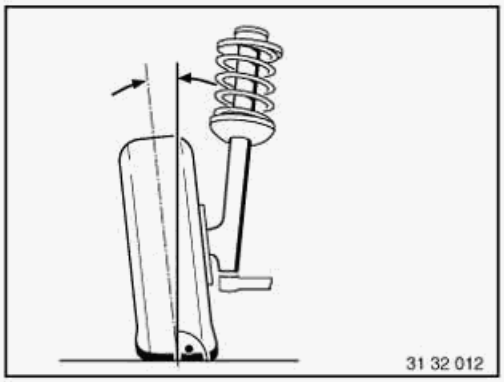

- Camber is the inclination of the wheel from the perpendicular.

5.3 Toe-in

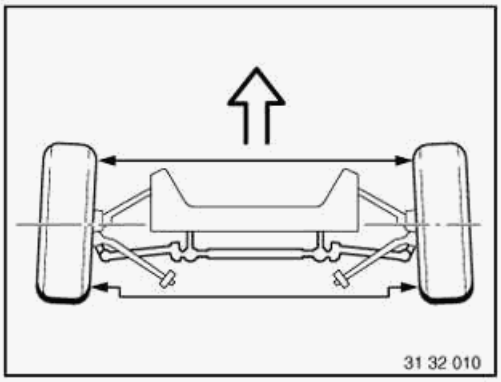

- Toe-in is the reduction in distance of front of front wheels to rear of front wheels. Toe-in prevents the wheels from moving apart when driving (wobbling and scuffing).

5.4 After-run

cardiagn.com

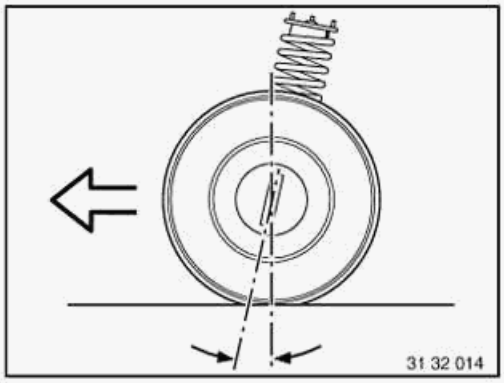

- After-run is the inclination of the kingpin viewed from the side and relative to direction of travel. The line through the centre point of the spring strut support bearing and the control arm ball joint corresponds to the "kingpin".

5.5 Geometrical driving / symmetrical axis

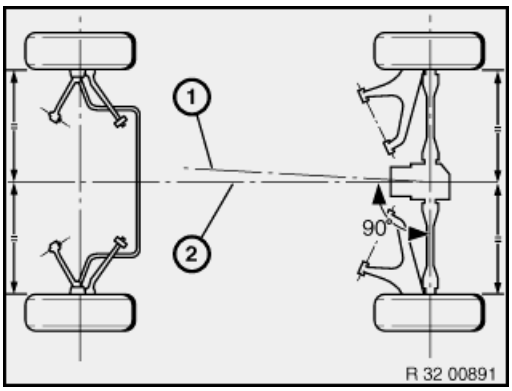

- (1) The geometrical driving axis is the angular intersection point from total toe-in on the rear wheels. Front-wheel measurements are taken in reference to this axis.
- (2) The symmetrical axis constitutes the centreline between front and rear axles.

5.6 Wheel offset angle

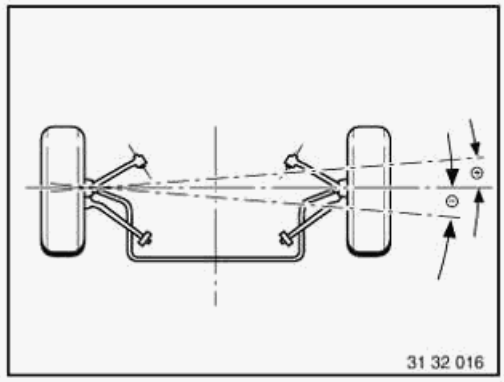

- The wheel offset angle is the angular deviation in the intersection line of wheel contact points at a line drawn at 90° to the geometrical driving axis. The wheel offset angle is positive when the right wheel is displaced towards the front and negative when it is displaced towards the rear.

5.7 Kingpin offset / kingpin radius

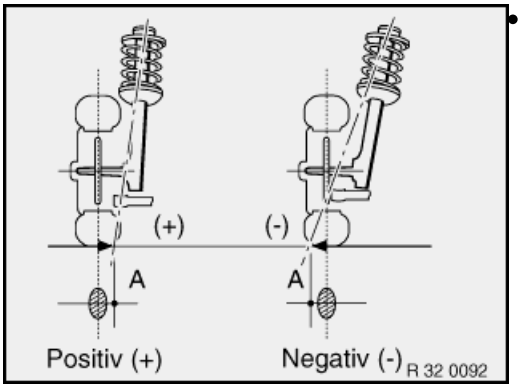

- The kingpin offset / kingpin radius is the distance from the centre of the wheel contact face to the intersection point of the extension of the kingpin axis.

6. Wheel suspension

Wheel suspension includes the components which connect the wheel to the mostly load-bearing floor pan components on the body which guide the vehicle in the desired direction. This connection involves axles or

cardiagn.com

comparable construction elements, guided by trailing arms. The type of wheel suspension is one of the determining factors governing the driving characteristics of a vehicle. A distinction is made between two main groups: 1. The rigid axle and 2. The independent suspension.

6.1 Rigid axle

Description	Advantages	Disadvantages
On the rigid axle, both wheels or pairs of wheels are connected by means of a rigid axle body. Every change in a one wheel is transferred to a greater or lesser extent to the other one. If a rigid axle has been installed, it is now only ever as a rear axle. This is sharp contrast to trucks and buses where they are used frequently.	No changes in camber and toe-in occur during suspension action. This means: low tyre wear and good directional stability.	Non-driven rear axles can also receive negative camber and this increases tyre wear.

6.2 Independent suspension

Description	Advantages	Disadvantages
Based on the modern technology standard independent suspension is available on the front and rear axles of BMW vehicles. This development was prompted by inertia mass because a reduction in unsprung masses improves wheel and ground contact, enabling the wheel to maintain better traction. The tracking of independently suspended wheels requires transverse links and trailing arms which can be called upon to absorb occasional high levels of longitudinal and lateral forces.	Independently suspended wheels do not influence one another.	Depending on design, during suspension action, changes can occur in camber, toe-in, track width, after-run and wheelbase.

7. Wheel alignment / test procedure

7.1 Measuring options

The next section itemises all the measuring options and values in an at-a-glance list (FA = front axle, RA = rear axle).

Measuring options	Measuring accuracy	with measuring range	Total measuring range
Total toe-in (FA + RA)	± 2'	± 2°	± 18°
Single wheel toe (FA + RA)	± 2'	± 2°	± 9°
Camber (FA + RA)	± 1'	± 3°	± 10°
Wheel offset (FA)	± 2'	± 2°	± 9°
Geometrical driving axis	± 2'	± 2°	± 9°
Castor	± 4'	± 18°	± 22°
Steering axis inclination	± 4'	± 18°	± 22°
Toe difference angle	± 4'	± 20°	± 20°
Maximum steering angle (FA)	± 4'	± 60°	± 300°
Maximum steering angle (RA)	± 4'	± 9°	± 9°
After-run correction range	± 4'	± 7°	± 10°

Note:

The details for the measuring accuracy only apply when using precision rotational and sliding

cardiagn.com

supports together with BMW quick release brackets.

7.2 Preparatory work:

Before the measurement can commence, preparatory work is required at the measuring station and on the vehicle (see BMW KDS, operating instructions). This preparatory work includes:

- Ease-of-movement of rotational and sliding plates
- Alignment of rotational and sliding supports to suit track width and wheelbase
- Driving of vehicle centrally onto the supports
- Apply parking brake
- Remove locking pins from the supports to prevent torsional stresses in the chassis and suspension when subjecting the vehicle to load.
- Check the wheel rim and tyre size, tread depth, inflation pressure, steering backlash, wheel bearings and condition of the suspension and shock absorbers
- Secure measuring device bracket to the wheels
- Load vehicle acc. to BMW KDS specification
- Apply sudden load to vehicle with brakes released to obtain a stable centre position.
- Secure the service brake by applying the brake tensioner

7.3 Input / output measurement

This measurement can be conducted as a program-guided measurement check, just like any subsequent adjustment work and the ensuing outgoing alignment check. The sequence of chassis and suspension measuring points to be called up and checked by the systems software. The individual procedural steps cover:

- driving in a straight line to obtain an accurate record of the toe-in and camber value for the rear axle
- touch-sensitive routine to determine after-run, steering axis inclination and toe difference angle
- Recording of toe-in and camber of front axle (prior to this, set the steering centrepoint)
- touch-sensitive routine to measure the maximum steering angle on left and right sides
- Checking the measuring value summary with nominal / actual comparison of all measured values.

7.4 Printout of the data

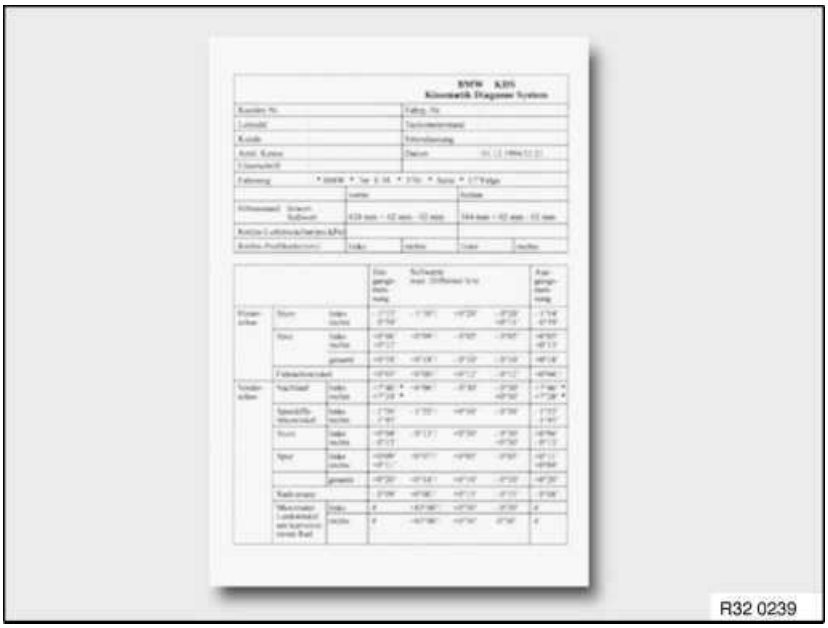

The report printout from the integrated DIN-A4 printer is subdivided into three areas:

- Headers with customer and vehicle identification data --> here, the customer data entered before the start of measuring work are printed out together with the vehicle data.
- Centre section with vehicle data --> these include brand, type, model and model year of the vehicle, as defined during selection of the nominal data record. Furthermore, this section involves printing out the previously measured values for ride height, inflation pressure and tread depth.

cardiagn.com

- The final section with all chassis and suspension measuring values comprises 3 columns: incoming wheel alignment check, nominal values and outgoing measurement. The measured values are recorded separately in these 3 columns.

8. Special features

8.1 Wheel alignment with non-selective access

During wheel alignment checks with non-selective access, the selection and sequence of measuring points can be made in any desired order. When doing this, the following points must be observed in order to achieve the correct measuring results:

- Carry out all work as defined during the program-guided wheel alignment check.
- Before the alignment check of toe-in and camber values on the rear axle, the steering must be set in its 'straight-ahead' position to ensure that it is aligned with the vehicle's centre axis.
- Prior to the alignment check of individual toe-in values on the front axle, the steering wheel centre position needs to be determined to ensure that the steering wheel is in its correct position.

8.2 System settings

The following settings only need to be entered and set once: language, display format, date/time, promotional text, remote control with display, selection of rotary plate and printer setting. These remain saved in memory.

9. Comparison, BMW KDS (Bosch - Beissbarth)

	Bosch	Beissbarth
Recording of measuring values	Infrared	Image sensor
Data transmission	Cable	Infrared / cable
Voltage supply to the pickups	Cable	Accumulator / cable
Master key	Infrared	Infrared
Master key with measuring value display	Cable	Infrared
Nominal data memory	Disk	Hard disk
Measuring value memory	Always the last vehicle measured	unlimited vehicle memory capacity
Operating system	---	MS-DOS
Languages	English and one language on order	EN, DE, NI, SV, IT, FR, SP (other languages on request)
Update	3.5" diskette	3.5" diskette from TIS/DIS
Monitor	20"	17"
Computer	---	Pentium
Drives	2 x diskette	1 x diskette, 1 x CD-Rom

10 Change in operation (menu)

10.1 Master key with display

The process of enabling the master key with display is described in the following procedural steps:

1. in the special functions (button ”**S**"), call up the ”**Service**" menu
2. In the”**Service**" menu, call up the ”**Master key**" submenu
3. In the ”**Master key**" submenu, select the ”**Master key with display**" point - this is a once-only setting.

Important!

On devices without master key, this setting must be set to ”**No master key**".

10.2 Summary of operating instructions

1. Switch on the master key by pressing the ”**ON**" button (it is permissible to switch this on during the alignment check). The title screen then appears on the LCD.

cardiagn.com

2. On the measuring equipment cabinet, select "**Straight-ahead driving**" for the "**Incoming alignment check**", then "**Adjusting procedure**" or the "**Outgoing alignment check**". The following graphic appears on the LCD monitor for "**Driving straight ahead**".
3. Pressing the "**Forwards arrow**" calls up the next measuring screen. What next appears on the LCD display blocks are a designation of the measured value and a tolerance bar with measured value. If that measured value is within tolerance, this is depicted with black numerals on a light background. If that measured value lies outside the tolerance, it is then displayed in inverted fashion (i.e. light numerals on a dark background).
4. Pressing the "**F**" button briefly makes it possible to alternate between the designation of the measured value and the nominal value with tolerance within the display block.
5. To scroll onwards through the measured values, press the "**Forward arrow**", "**Backward arrow**" and the "**Cancel" keys (red spot)** . The function of this button is identical to that of the buttons/keys on the graphics pad.
6. Even when opting for the "**Alignment check with non-selective access**", the measured values can be chosen in the same way as for the "program-guided alignment check" process.
7. Using the "**Printer**" button enables reports to be printed out during the alignment check. The remote control buttons are only enabled during the measurement and setting process (not in response to customer input, choice of vehicle, etc.).

10.3 Display support

- Measured values with nominal/actual comparison and tolerance bar (nominal values can be displayed by pressing the "**F**" key/button)
- Touchscreen icon for touch-sensitive routines
- Summary of measured values with the latest nominal / actual comparison
- Compensation for lateral runout on wheel rims
- With all other functions (e.g. customer input), the title image appears on the liquid crystal display

Note:

Whenever data transfer from the master key / remote control to the computer is interrupted, the master key icon in the lower right-hand corner of the screen changes colour from green to red and the image on the LCD display is depicted in inverted format, i.e. black becomes white and vice versa. This changeover does not occur in the title image. Once visual connection is re-established, the master key recommences work at the point in the program where the interruption occurred. Continuous visual connection during the alignment check is therefore not necessary.

- The "**Egg timer**" icon on the LCD display indicates: "**Please wait**".
- The "**Battery**" icon in the upper right-hand corner of the LCD display indicates that the battery reserve has been reached.
- Switching off the remote control / master key: Press and hold down the "**F**" key for 5 seconds, then place in the charge bracket or plug in the charging cable. The title image then reappears as the charge indicator light.
- If the master key is placed in the charge bracket during the alignment check process, it must when required be switched on using the "**ON**" key.

11 Updating the software / nominal data

No more diskettes will be sent out to any BMW authorised workshops who in the past subscribed to "**BMW KDS** (Beissbarth / Bosch)". For reasons of cost, it is no longer possible to produce these diskettes in-house on the "**DIS tester**" or on the "**TIS/EPC server**". The data are updated on the TIS-CD on a regular basis

11.1 Prerequisites

- BMW KDS (Beissbarth / Bosch)
- Program status (Beissbarth) TIS-CD: from CD 12/95
- Program status EPC: from 12/95
- Program status (Bosch) TIS-CD: from CD 08/97
- Program status DIS: from V6.0
- Diskettes, 3.5", 1,44 MB (Beissbarth 5 diskettes / Bosch 1 diskette)

11.2 Procedure (Beissbarth)

cardiagn.com

1. Go into screen mask "**Administration**"
2. Select **KDS button**
3. Select **Beissbarth**
4. After request, load "**diskette 1**" and acknowledge with "**OK**" (program diskette 1 of 2 is created, perform labelling operation)
5. After request, load "**diskette 2**" and acknowledge with "**OK**" (program diskette 2 of 2 is created, perform labelling operation)
6. After request, load "**diskette 3**" and acknowledge with "**OK**" (program diskette 1 of 3 is created, perform labelling operation)
7. After request, load "**diskette 4**" and acknowledge with "**OK**" (program diskette 2 of 3 is created, perform labelling operation)
8. After request, load "**diskette 5**" and acknowledge with "**OK**" (program diskette 3 of 3 is created, perform labelling operation)
9. Perform software update and /or nominal data input on the KDS in the usual manner using the manufactured diskettes.

11.3 Procedure (Bosch)

1. Go into screen mask "**Administration**"
2. Select **KDS button**
3. Select **Bosch**
4. Write a name on "**Diskette 3.1**", when prompted to do so, insert in the drive and confirm by pressing "**OK**" (2x) --> nominal values are then copied to the diskettes
5. Load nominal value diskette 3.1 in drive 3.1, load operating system diskette 3.0 in drive 3.0.
6. Boot device in the usual manner

Important!

When producing KDS diskettes, all data on the diskettes used are overwritten.

Note:

Whenever an error occurs, this is displayed and the program aborts. This process needs to be restarted from the very beginning, which involves deleting all data from the diskette. Possibly use a new diskette.

12. Creating, copying and editing nominal data

12.1 Copying

- Press the "**C**" button and select the vehicle which is to be copied.
- In the special function section, select menu item "**Editing of nominal data**". Set up a new vehicle record in the familiar way. Now the data input screen displays the nominal values for the previously selected vehicle. Re-enter the modified data and save the data record.

12.2 Create

- Press the "**C**" button and, in the special function, select the "**Editing of nominal data**" menu item. Set up a new vehicle record in the familiar way. An empty data input screen now appears. Enter the data and save the data record.

12.3 Edit

- Nominal data programmed in the factory cannot be deleted or changed. If these data are changed, a new vehicle record with those amended nominal data needs to be set up. New vehicle records set up by the user are designated as such in the selection menu with a "**+**". These vehicles can be deleted by the user by means of the screen button "**-**" or can be amended using the "**< >** " button. These buttons only appear on the screen if the vehicles were entered in the system by the user.

13. Special functions

13.1 Customer button for printer protocol

In the "**Special function**" menu, the "**Customer-specific text**" submenu can be called up. An input screen appears on the display. A name and address must be added to this input screen and saved by pressing the "**S**" screen button. The text entered is then imprinted in the header of the protocol / report.

13.2 Alignment options

cardiagn.com

- in the special functions (button "**S**"), call up the "**Service**" menu

- In the submenu "**alignment**", select the "**Toe-in alignment**" or the "**Toe-in adjustment**" option. The toe-in and camber alignment program guides the user step by step through the alignment process with the help of text and images. At the end of the adjustment process, the deviation in measuring value from every measuring sensor is displayed on the screen.
- These alignment values can be saved in the measuring pickup memory by pressing "**Save**" or the program can be quit by pressing the "**Red button**" without saving (a checking function). The alignment values can be printed out.

13.3 Turntable test

- in the special functions (button "**S**"), call up the "**Service**" menu
- In the "**Service**" menu, call up the "**Turntable test**" function. Rotate left and right-hand turntables and check the display on the screen. Important: The measuring range is ±306 degrees.

13.4 View and delete customer entries from the database

- In the special functions in the "**Database**" menu, call up the "**Delete**" menu option. The data input screen then appears. Fill in the search boxes with the data to be deleted.
- Using the "**-**" button, this data record can be deleted. It is now possible to use the touchscreen pen to highlight and delete a new data record.
- The screen buttons "**Arrow up**" and "**Arrow down**" enable users to scroll through the entire database.
- To quit the Delete function, press the Cancel button (red spot).

14. Internal program change

Other internal program changes were made which only slightly alter the program run, but which do optimise the alignment check in terms of comfort and speed. This is described in the following pages:

- Optimisation of compensation for lateral runout on wheel rims in relation to speed.
- Optimisation of impact routines: Marking can still be corrected within the gateway. The message "**Turntables not connected**" no longer causes this routine to terminate. Measuring can continue after the turntables have been plugged back in.
- Standardisation of screen colours with the colours on the panel.
- Extension of texts in some foreign languages.
- Elimination of program and cosmetic errors.
- Electronic water scales
- Discontinuation of wheelbase measurement

15. Faults

15.1 Tyre faults

	Error		Impact
1	Tracking, camber, toe difference angle and caster not correct	1	Serious tyre squeak, even at relatively low speeds
2	Too much toe-in or too much positive camber	2	Tyres are worn longitudinally down one outside edge
3	Too much negative camber	3	Tyre wear on inner edge

cardiagn.com

4 Worn front axle suspension points on FWD cars	4 Amplified noise / Vehicle pulls away one-sidedly when accelerating
5 Incorrect toe adjustment	5 Radial adjustment of wheel settings / tyre tread exhibits burr formation within the tread pattern
6 Play in wheel suspension caused by mechanical components (suspension, steering)	6 Washed out areas / wobbling on front wheel
7 Insufficient inflation pressure in the tyre	7 Tyre wear along outer areas

15.2 Front axle fault

Fault	Cause	Remedy
1. Toe deviation	a) Vehicle not in normal position	a) Correct ride height
	b) Tie rod(s) bent	b) Replace tie rod(s)
	c) Ball joints on track rod(s) misaligned	c) Replace tie rod(s)
	d) Rubber mount in control arm faulty	d) Replace control arms
2. Camber deviation: Camber is defined by design and cannot be adjusted.	a) Rubber mount in control arm faulty	a) Replace control arms
	b) Control arm deformed	b) Replace control arms
	c) Spring strut deformed	c) Replace spring strut
	d) Guide joint worn	d) Replace control arms
	e) Spring deflection too great	e) Replace coil spring, ride height

cardiagn.com

	f) Front axle carrier deformed	f) Replacing front axle support
	g) Spring strut shock absorber mount misshapen	g) Repair front end
	h) Distortion in floor assembly (engine carrier)	h) Repair body
3. Castor deviation: Caster is defined by design and cannot be adjusted	a) Rubber mount for tension/traction strut defective	a) Replace rubber mount
	b) Tension/traction strut misshapen	b) Replace tension/traction strut,
	c) Control arm deformed	c) Replace control arms
	d) Spring strut deformed	d) Replace spring strut
	e) Wheel house deformed (spring-strut mount)	e) Repair front end
	f) Distortion in floor assembly (engine carrier)	f) Repair body
4. Toe angle difference deviation	Prerequisite: camber and caster are correct	
	a) Tie rods not adjusted uniformly	a) Adjust toe on left and right sides to same value
5. Wheel-offset deviation	Prerequisite: front wheels have equal single toe to geometrical axis	
	a) Front axle carrier deformed	a) Replacing front axle support
	b) Engine carrier deformed	b) Repair body
	c) Control arm deformed	c) Replace control arms

cardiagn.com

	d) Tension/traction strut misshapen	d) Replace tension/traction strut

15.3 Rear axle defects

Fault	Cause	Remedy
1. Camber deviation	a) Vehicle not in normal position, spring deflection too great	a) Correct ride height
	b) Rubber mount on rear axle carrier unserviceable	b) Replace rubber mount
	c) Rear axle carrier deformed	c) Check rear-axle carrier, replace if necessary
	d) Control arm deformed	d) Check/replace control arm
	e) Traction strut misshapen	e) Check traction strut, replace if necessary
	f) Distortion in floor assembly	f) Repair body
	g) Swinging arm deformed	g) Replace swinging arm
2. Rear-wheel position incorrect	a) Rear axle carrier displaced laterally	a) Check rubber mounts on rear-axle carrier, replace if necessary
	b) Distortion in floor assembly	b) Repair body
3. Toe deviation	a) Vehicle not in normal position, i.e. spring deflection too great	a) Correct ride height
	b) Rubber mounts in rear-axle carrier faulty	b) Replace rubber mount
	c) Control arm deformed	c) Replace control arms
	d) Rubber mount and swinging arm unserviceable	d) Replace swinging arm

cardiagn.com

	e) Rear axle carrier deformed	e) Check rear-axle carrier, replace if necessary
	f) Traction strut misshapen	f) Check traction strut, replace if necessary
4. Deviation from the geometric axis	Prerequisite: rear wheel total toe value must be correct.	
	a) Distortion in floor assembly	a) Repair body

Other notes on the topic of the ”kinematics diagnosis system" can be found in the BMW KDS (Beissbarth / Bosch) operating instructions.

None of the function and system descriptions are covered by an update service. Availability of parts and scope for immediate ordering cannot be derived from this information. The specialist departments shall be in touch with the markets at an appropriate time with further details.

cardiagn.com

32 01 99 (503)

Kinematics diagnosis system and environment

BMW KDS (Beissbarth)

Table of contents

1. Foreword

1.1 Objective

1.2 Further development of the BMW kinematics diagnosis system

1.3 Technical data

1.4 Delivery specification

1.5 Required accessories

1.6 Advisable accessories

2. Measuring options with the BMW KDS

2.1 Front Axle

2.2 Rear Axle

2.3 Other rmeasuring options

3. System description

3.1 BMW KDS 1, based on the ML4000 from Beissbarth

3.2 Computer

3.3 Graphics pad

3.4 Equipment cabinet

3.5 Remote display

3.6 Measuring pickup with image sensor (CCD camera)

3.7 BMW quick-release brackets

3.8 Rotational / sliding supports

3.9 Sensor tips

3.10 Spoiler adapter

3.11 Quick-clamping units

cardiagn.com

3.12 Retaining claws
4. Work bay
4.1 Environment
4.2 Prerequisite for measurement
4.3 Measuring tolerance
4.4 Levelling of measuring point
5. Chassis-specific terms
5.1 Toe difference angle
5.2 Camber
5.3 Toe
5.4 Castor
5.5 Geometrical driving axis / symmetrical axis
5.6 Wheel offset angle
5.7 Kingpin offset / kingpin radius
6. Wheel suspension
6.1 Rigid axle
6.2 Independent suspension
7. Wheel alignment / procedure
7.1 Measuring options
7.2 Preparatory work:
7.3 Incoming / outgoing wheel alignment
7.4 Printout of the data
8. Special features
8.1 Wheel alignment with non-selective access
8.2 System setting
9. Comparison, BMW KDS (Bosch - Beissbarth)
10. Change in operation (menu)
10.1 Master key with display
10.2 Summary operating instructions
10.3 Display support
11. Software updates / nominal data
11.1 Preconditions
11.2 Procedure (Beissbarth)
11.3 Procedure (Bosch)
12. Creating, copying and editing nominal data
12.1 Copying
12.2 Creating
13.3 Editing
13. Special functions
13.1 Customer button for printer protocol
13.2 Adjustment options
13.3 Turntable test
13.4 Viewing and deleting customer entries from the database
14. Internal program change

cardiagn.com

15. Error

15.1 Tyre fault

15.2 Front axle fault

15.3 Rear axle fault

1 Preface

1.1 Objective

The complexity of wheel alignment as a topic has increased. This BMW Service Technology document is therefore intended to achieve several objectives:

- Compiling guidelines for working with the BMW KDS.
- Getting to grips with the technology of wheel alignment on modern vehicles and clarifying any questions that arise.
- Transparency and clarification of different terminology.
- Clarification of fault causes from the past, so that these can be avoided in future after studying this paper.
- Prerequisites for safe dealings with BMW KDS.

1.2 Further development of the BMW kinematics diagnosis system

- The BMW kinematics diagnosis system (KDS) forms an integral element of systems-based philosophy in relation to automotive technology. This provides the peace of mind of being able to work rationally and in a BMW-compliant manner, and the certainty of being prepared for future technological developments. With regard to precision and performance in the area of wheel alignment and chassis adjustment, BMW has done the best it can with what is technologically feasible: The BMW kinematics diagnosis system (KDS).
- The BMW kinematics diagnosis system from Beissbarth is more than just a further development of conventional axle alignment equipment. It sets new dimensions in terms of precision, performance, speed and handling. Guarantees for the perfection upon which BMW customers count in their dealings with BMW Service.
- Ride comfort, driving safety and tyre wear depend to a large extent on perfect interaction with vehicle kinematics. BMW is constantly delivering new generations of chassis and suspension to the market, each of which is superior and/or even closer to perfection than its predecessor. That means that there are fewer kinematic adjustment points on the chassis and suspension and even tighter specified tolerances with regard to wheel alignment and adjustment.
- Through the use of the multilink rear axle and the E36, the previously recommended electronic wheel alignment equipment was no longer suitable for BMW chassis alignment checks. This related to the measuring procedure as well as to the measuring accuracy. The generation of equipment approved with the introduction of the E36 range is still able today to satisfy all the requirements imposed on modern wheel alignment equipment, including the use of the latest computer technology.
- For wheel alignment purposes, only the BMW kinematics diagnosis systems from Beissbarth and Bosch may be used.

1.3 Technical data

cardiagn.com

1.	Display	- 17 inch graphics screen with high-resolution graphics (640x480 pixels with 256 colours)
2.	Teletext	- in each programmed national language
3.	Wheel sizes	- 12"...20"
4.	Vehicle memory capacity	- unlimited
5.	Turntables	- Load-carrying capacity 1000 kg, angle of rotation ± 360°, 450 x 450 x 50mm (L x B x H), sliding range ± 50 mm, weight 18 kg
6.	Sliding supports	- Load-carrying capacity 1000 kg, angle of rotation ± 10°, 450 x 450 x 50mm (L x B x H), sliding range ± 65 mm, weight 17 kg
7.	Electrical connection	- 100...115 V / 220...240 V 50/60 Hz, 0,5 kW (other connections on request)

1.4 Delivery specification

1 PC display element with graphics screen, graphics panel, equipment cabinet, small or large including automatic charging station, DIN-A4 dot matrix printer

4 Pickup with CCD camera technology and infrared data transfer, with installed voltage supply

1 Wiring harness (comprising 4 cables)

1 Brake tensioner

1 Steering wheel lock

2 Electronic precision turntable supports with integrated sensor and without approach ramp

2 Sliding supports without approach ramp

cardiagn.com

4 BMW quick-release units comprising a locating bell housing P8-68 and quick-release bracket P267 01, incl. coated retaining claws

1 Operating instructions for BMW KDS (8 languages)

1 BMW software and the BMW nominal vehicle data with adjustment images as well as texts for measurement preparations

1.5 Required accessories

2 Locking rods for positioning the vehicle

1 Set of sandbags for specified loading

1.6 Advisable accessories

4 Quick-clamping units

2 Set of collision plates

1 Remote control / display

1 Transport carriage (for ballast pockets, turntables and sliding plates, and 4 quick-release brackets)

2 Measuring options with the BMW KDS

2.1 Front axle

- Toe-in (individual wheel and total toe-in relative to the geometrical driving axis)
- Camber (when driving straight ahead)
- Wheel offset (relative to the left front wheel)
- After-run, steering axis inclination and toe difference angle

2.2 Rear axle

- Toe-in (individual wheel and total toe-in relative to the central plane of the vehicle's longitudinal axis --> previously known as the symmetrical axis)
- Geometrical driving axis
- Camber

2.3 Other rmeasuring options

- Wheel offset, rear
- Wheelbase difference
- Lateral offset, right
- Lateral offset, left
- Track width difference
- Axial offset

3. System description

3.1 BMW KDS 1, based on the ML 4000 from Beissbarth

cardiagn.com

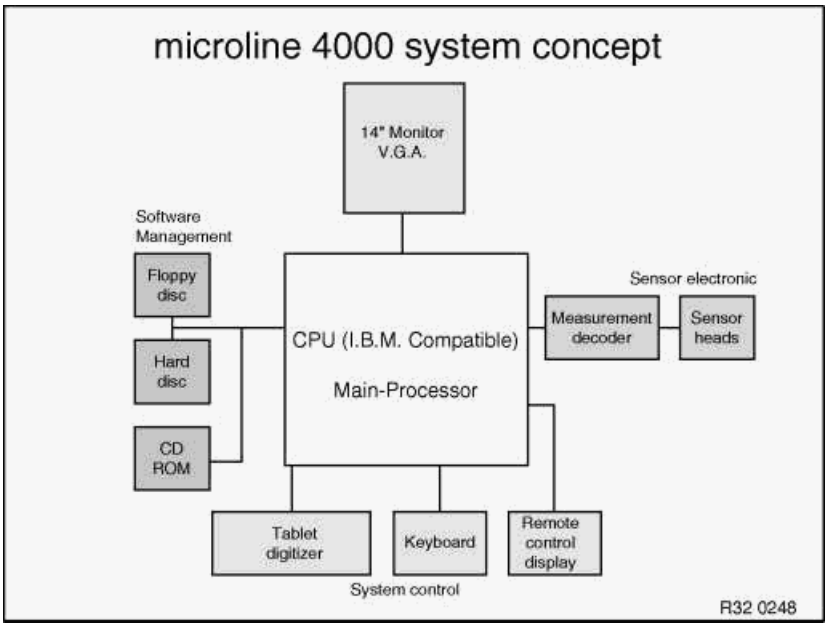

The KDS 1 is available without surcharge in a choice of two design versions:
1. Mobile workstation

2. Mobile compact cabinet

The larger workstation provides a small storage space for accessories, whereas the compact cabinet is mobile and is ideal for confined working areas. Both versions are available as a wireless measuring system (infrared). In terms of measuring technology, the only difference between these two systems is in their handling and their upgrade options. In both these versions, the four pickups are stored in integrated inserts with battery charge points. Following the automatic charging process, the accumulators on the pickups deliver enough power for 10 hours of continuous operation.

3.2 Computer

- KDS system 1 comprises tried-and-tested and thoroughly reliable industrial components. The computer is an IBM-compatible 32-bit Intel processor with CD drive, of the kind commonly used in the PC sector.

cardiagn.com

3.3 Graphics pad

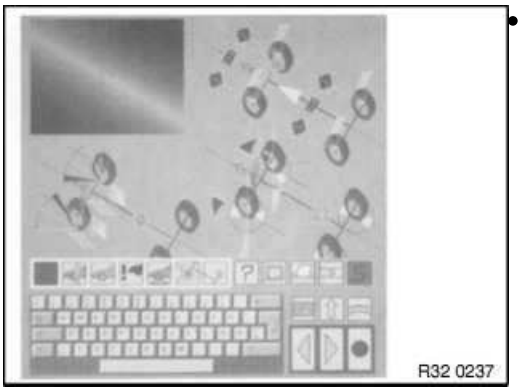

- All functions are depicted graphically on a ”Symbol" pad. The pad is protected beneath a Plexiglas panel. This is easy to replace whenever major design changes are required. The user interface has no membrane and is therefore safely protected against damage. The main functions are enabled by clicking the symbol with the sensor probe.

3.4 Equipment cabinet

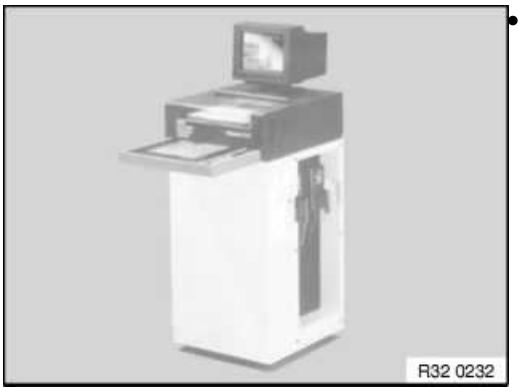

- The PC with graphics monitor and pull-out operating pad, mountings for the pickups, the remote control and the DIN-A4 printer are integrated on the workstation. The charging station is located in the cabinet and can also be connected to the pickups and remote control unit by plug-in cables (operation with simultaneous charging of the accumulators / rechargeable batteries).

3.5 Remote display

A wireless remote display unit can be provided on request. The remote control buttons are only enabled during the measurement and setting process (not in response to customer input, choice of vehicle, processing of nominal data etc.). The following displays are supported by the remote display facility:

- Measured value with nominal/actual variance comparison and tolerance bar
- Touchscreen icon for touch-sensitive routines
- Live overview of toe-in / camber values with nominal / actual comparison
- Rims, lateral runout compensation

3.6 Measuring pickup with image sensors (CCD cameras)

cardiagn.com

Each of the measuring pickups is equipped with two image sensors and its own processor for wireless infrared transmission with integrated accumulators for automatic measurement. Advantages:

- No temperature deviation
- Very high measuring resolution (theoretically, toe-in could be measured in seconds of an angle).
- Single toe-in range of more than ±9 degrees relative to constant screen display of toe-in during the replacement of track rod ends
- Exact system precision, i.e. with measurements on the vehicle following rim lateral runout compensation: an accuracy of 2 minutes of angle for toe-in and camber

3.7 BMW quick-release brackets

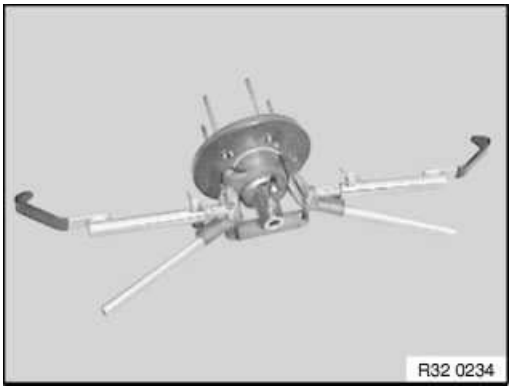

- BMW quick-release brackets for precise mounting of measuring pickups and measurement without compensation of lateral runout on rims.
- **Note:** Quick-release brackets potentially available,, e.g. from older F1600 or ML-3000 models, must not be used with the BMW KDS.

3.8 Rotational / sliding supports

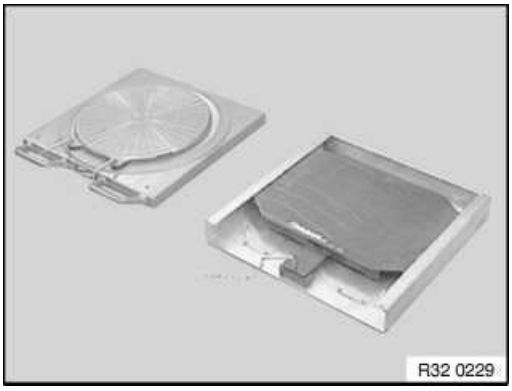

- Electronic precision turntables (rotational supports) for the front wheels with integrated sensor (360 degrees all-round measuring range)
- Robust sliding supports for the rear wheels with a swivelling / rotating upper plate.
- Accessories: Cover for aluminium rotational supports / turntables

3.9 Sensor probes

cardiagn.com

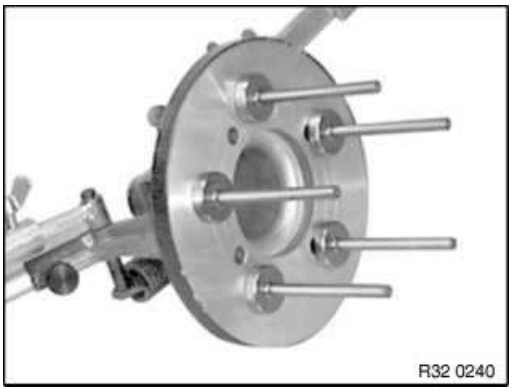

- From April 1993, a new BMW light-alloy wheel (styling No. 18) has been available as a BMW optional accessory. During vehicle alignment checks on these wheels, new sensor probes are required for the quick-release mountings on the recommended wheel alignment equipment.
- On recent deliveries of KDS 1, the new sensor probes are included in the delivery specification (order number: BS 90 19 11).

3.10 Spoiler adapters

- On vehicles with very deep spoilers, it is possible for the measuring beam between the measuring pickups to get interrupted. This is particularly true of the transverse front axle.
- In this case, the spoiler adapter acts as a connecting member between the measuring device holder and the measuring pickup. This causes the measuring pickup to be located 50 mm lower, thereby enabling the measuring beam to pass freely below the spoiler.

3.11 Quick-release mountings

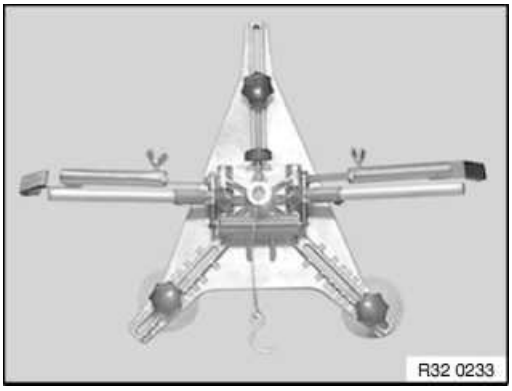

- Quick-release mountings for the wheel alignment of other vehicles with compensation of lateral runout on rims.
- Wheel rims without sensor bore holes (wheel rims for BMW vehicles made my other manufacturers)

3.12 Retaining claws

cardiagn.com

- The versatile retaining claws and the rubberised retaining claws enable an extremely wide and varied range of clamping variants to be used for the measuring equipment holder, even on exotic, i.e. extremely unusual, light-alloy rims.

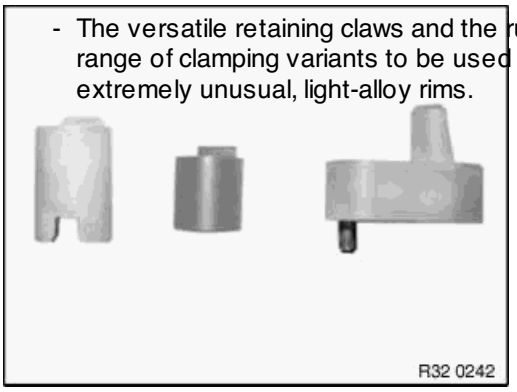

4. Workbay

4.1 Environment

Description:

All the vehicle hoists currently recommended by BMW (cf. Workshop Equipment - Planning Documentation, issue 11) for wheel alignment equipment comply with the requirements for BMW KDS.

The BMW KDS does not impose great demands on its installation location. The device can be used over inspection pits or on vehicle hoists (i.e. workshop ramps).

Prerequisites:

- Wheel alignment pits
- Telescopic mast vehicle hoists with lowering facility
- 2-stamp vehicle hoists with lowering facility
- Repair statuses with lowering facility
- One measuring station (approx. 4.5 m x 7.0 m).
- The rotational supports ('turntables') must be bolted to the vehicle hoist

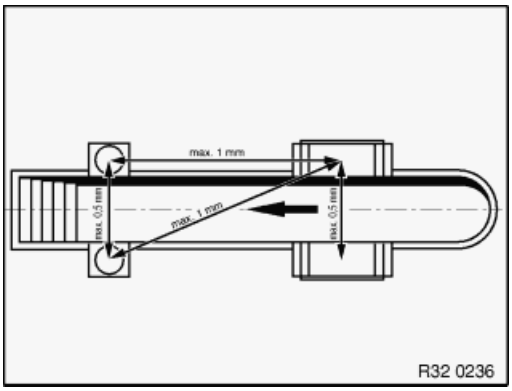

The locating surfaces for rotational and sliding plates must not exceed the maximum difference in height described below:

- from left to right ± 0.5 mm
- from front to back ± 1.0 mm
- diagonally ± 1,0 mm.

Note:

A height difference between turntables of ± 2 mm from left to right gives rise to a measuring error with camber of 4,8°.

For comparison: The camber tolerance on the E36 is ± 10'. Tyre tread difference or different inflation pressures give rise to measuring errors on the same magnitude.

4.2 Prerequisites for the wheel alignment check

During the wheel alignment check, the front and rear wheels need to be standing on the rotational and sliding

cardiagn.com

supports to enable all wheel suspension points during the touch-sensitive routine and the adjusting procedure to remain free of torsional stresses. This demonstrates the need for the rotational and sliding supports for the various wheelbases and track widths on the candidate vehicle for the wheel alignment check to be relocated.

4.3 Measuring tolerance

The full range of measuring tolerance are system tolerances. That means that the total of all individual tolerances yields the value identified in the argumenter. Example - camber: Quick-release bracket + measuring pickup + computer = 1' with a measuring range of ±3° (all BMW vehicles lie within this measuring range).

4.4 Measuring station levelling

The manufacturers of BMW KDS (Beissbarth / Bosch) are able to check the alignment of the measuring station to the required level of precision, using levelling devices to do so. Bars or hose-type water scales are not suitable. Vehicle hoists must be under load when being levelled to ensure that due account is taken of the uneven deflection in vehicle rails.

Important!

A specialist operator must be involved in the setup work on each vehicle hoist (a member of the manufacturer's Service Product Support staff).

5. Chassis-specific terms

5.1 Toe difference angle

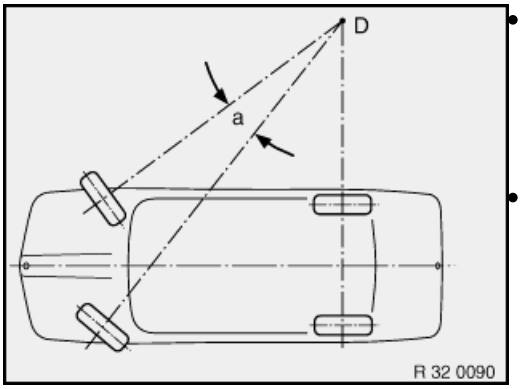

- The toe difference angle (a) is the angle setting of the inner cornering wheel relative to the outer cornering wheel when negotiating a bend in the road. Steering is designed in such a way that the relative angular positions of wheels change as steering lock progresses.
- In ideal situations, the wheel axes intersect at Point D in every steering position (except for straight ahead).

5.2 Camber

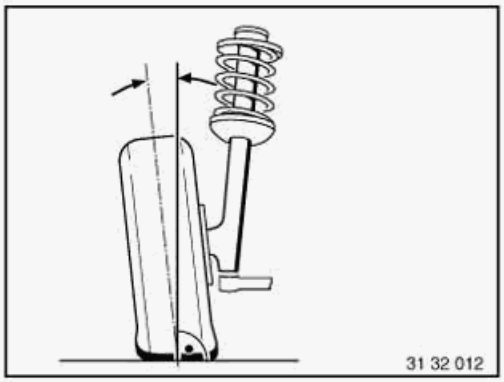

- Camber is the inclination of the wheel from the perpendicular.

5.3 Toe-in

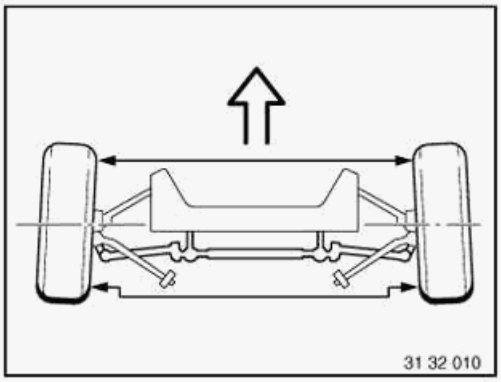

- Toe-in is the reduction in distance of front of front wheels to rear of front wheels. Toe-in prevents the wheels from moving apart when driving (wobbling and scuffing).

5.4 After-run

cardiagn.com

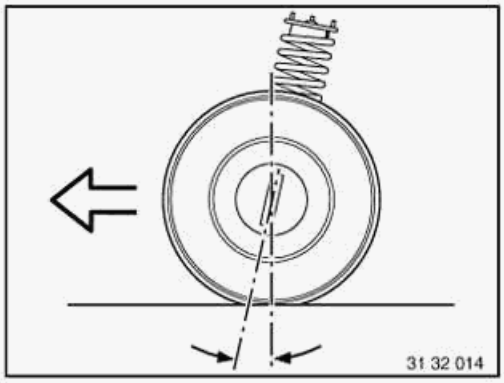

- After-run is the inclination of the kingpin viewed from the side and relative to direction of travel. The line through the centre point of the spring strut support bearing and the control arm ball joint corresponds to the "kingpin".

5.5 Geometrical driving / symmetrical axis

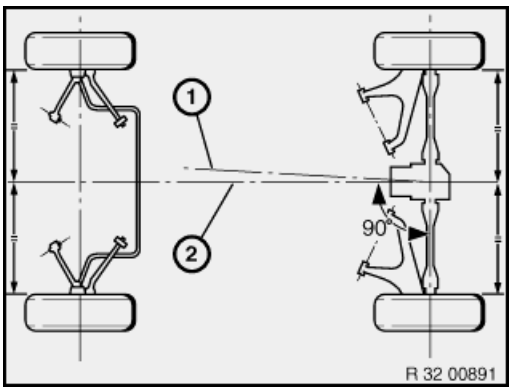

- (1) The geometrical driving axis is the angular intersection point from total toe-in on the rear wheels. Front-wheel measurements are taken in reference to this axis.
- (2) The symmetrical axis constitutes the centreline between front and rear axles.

5.6 Wheel offset angle

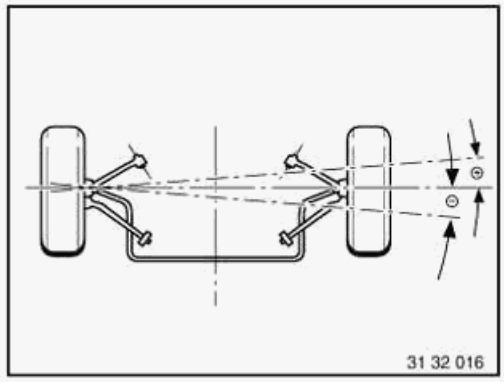

- The wheel offset angle is the angular deviation in the intersection line of wheel contact points at a line drawn at 90° to the geometrical driving axis. The wheel offset angle is positive when the right wheel is displaced towards the front and negative when it is displaced towards the rear.

5.7 Kingpin offset / kingpin radius

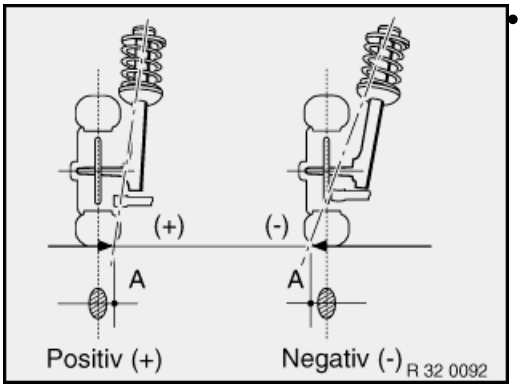

- The kingpin offset / kingpin radius is the distance from the centre of the wheel contact face to the intersection point of the extension of the kingpin axis.

6. Wheel suspension

Wheel suspension includes the components which connect the wheel to the mostly load-bearing floor pan components on the body which guide the vehicle in the desired direction. This connection involves axles or

cardiagn.com

comparable construction elements, guided by trailing arms. The type of wheel suspension is one of the determining factors governing the driving characteristics of a vehicle. A distinction is made between two main groups: 1. The rigid axle and 2. The independent suspension.

6.1 Rigid axle

Description	Advantages	Disadvantages
On the rigid axle, both wheels or pairs of wheels are connected by means of a rigid axle body. Every change in a one wheel is transferred to a greater or lesser extent to the other one. If a rigid axle has been installed, it is now only ever as a rear axle. This is sharp contrast to trucks and buses where they are used frequently.	No changes in camber and toe-in occur during suspension action. This means: low tyre wear and good directional stability.	Non-driven rear axles can also receive negative camber and this increases tyre wear.

6.2 Independent suspension

Description	Advantages	Disadvantages
Based on the modern technology standard independent suspension is available on the front and rear axles of BMW vehicles. This development was prompted by inertia mass because a reduction in unsprung masses improves wheel and ground contact, enabling the wheel to maintain better traction. The tracking of independently suspended wheels requires transverse links and trailing arms which can be called upon to absorb occasional high levels of longitudinal and lateral forces.	Independently suspended wheels do not influence one another.	Depending on design, during suspension action, changes can occur in camber, toe-in, track width, after-run and wheelbase.

7. Wheel alignment / test procedure

7.1 Measuring options

The next section itemises all the measuring options and values in an at-a-glance list (FA = front axle, RA = rear axle).

Measuring options	Measuring accuracy	with measuring range	Total measuring range
Total toe-in (FA + RA)	± 2'	± 2°	± 18°
Single wheel toe (FA + RA)	± 2'	± 2°	± 9°
Camber (FA + RA)	± 1'	± 3°	± 10°
Wheel offset (FA)	± 2'	± 2°	± 9°
Geometrical driving axis	± 2'	± 2°	± 9°
Castor	± 4'	± 18°	± 22°
Steering axis inclination	± 4'	± 18°	± 22°
Toe difference angle	± 4'	± 20°	± 20°
Maximum steering angle (FA)	± 4'	± 60°	± 300°
Maximum steering angle (RA)	± 4'	± 9°	± 9°
After-run correction range	± 4'	± 7°	± 10°

Note:

The details for the measuring accuracy only apply when using precision rotational and sliding

cardiagn.com

supports together with BMW quick release brackets.

7.2 Preparatory work:

Before the measurement can commence, preparatory work is required at the measuring station and on the vehicle (see BMW KDS, operating instructions). This preparatory work includes:

- Ease-of-movement of rotational and sliding plates
- Alignment of rotational and sliding supports to suit track width and wheelbase
- Driving of vehicle centrally onto the supports
- Apply parking brake
- Remove locking pins from the supports to prevent torsional stresses in the chassis and suspension when subjecting the vehicle to load.
- Check the wheel rim and tyre size, tread depth, inflation pressure, steering backlash, wheel bearings and condition of the suspension and shock absorbers
- Secure measuring device bracket to the wheels
- Load vehicle acc. to BMW KDS specification
- Apply sudden load to vehicle with brakes released to obtain a stable centre position.
- Secure the service brake by applying the brake tensioner

7.3 Input / output measurement

This measurement can be conducted as a program-guided measurement check, just like any subsequent adjustment work and the ensuing outgoing alignment check. The sequence of chassis and suspension measuring points to be called up and checked by the systems software. The individual procedural steps cover:

- driving in a straight line to obtain an accurate record of the toe-in and camber value for the rear axle
- touch-sensitive routine to determine after-run, steering axis inclination and toe difference angle
- Recording of toe-in and camber of front axle (prior to this, set the steering centrepoint)
- touch-sensitive routine to measure the maximum steering angle on left and right sides
- Checking the measuring value summary with nominal / actual comparison of all measured values.

7.4 Printout of the data

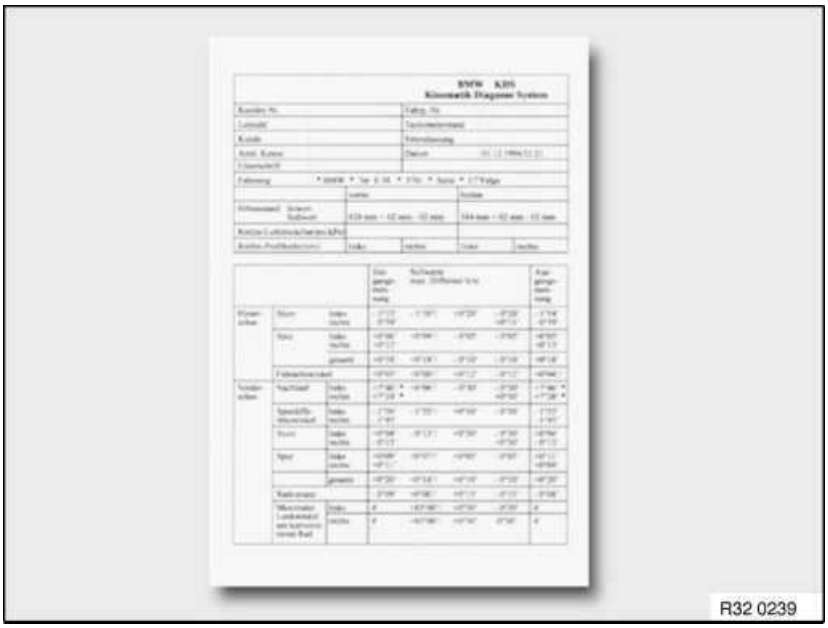

The report printout from the integrated DIN-A4 printer is subdivided into three areas:

- Headers with customer and vehicle identification data --> here, the customer data entered before the start of measuring work are printed out together with the vehicle data.
- Centre section with vehicle data --> these include brand, type, model and model year of the vehicle, as defined during selection of the nominal data record. Furthermore, this section involves printing out the previously measured values for ride height, inflation pressure and tread depth.

cardiagn.com

- The final section with all chassis and suspension measuring values comprises 3 columns: incoming wheel alignment check, nominal values and outgoing measurement. The measured values are recorded separately in these 3 columns.

8. Special features

8.1 Wheel alignment with non-selective access

During wheel alignment checks with non-selective access, the selection and sequence of measuring points can be made in any desired order. When doing this, the following points must be observed in order to achieve the correct measuring results:

- Carry out all work as defined during the program-guided wheel alignment check.
- Before the alignment check of toe-in and camber values on the rear axle, the steering must be set in its 'straight-ahead' position to ensure that it is aligned with the vehicle's centre axis.
- Prior to the alignment check of individual toe-in values on the front axle, the steering wheel centre position needs to be determined to ensure that the steering wheel is in its correct position.

8.2 System settings

The following settings only need to be entered and set once: language, display format, date/time, promotional text, remote control with display, selection of rotary plate and printer setting. These remain saved in memory.

9. Comparison, BMW KDS (Bosch - Beissbarth)

	Bosch	Beissbarth
Recording of measuring values	Infrared	Image sensor
Data transmission	Cable	Infrared / cable
Voltage supply to the pickups	Cable	Accumulator / cable
Master key	Infrared	Infrared
Master key with measuring value display	Cable	Infrared
Nominal data memory	Disk	Hard disk
Measuring value memory	Always the last vehicle measured	unlimited vehicle memory capacity
Operating system	---	MS-DOS
Languages	English and one language on order	EN, DE, NI, SV, IT, FR, SP (other languages on request)
Update	3.5" diskette	3.5" diskette from TIS/DIS
Monitor	20"	17"
Computer	---	Pentium
Drives	2 x diskette	1 x diskette, 1 x CD-Rom

10 Change in operation (menu)

10.1 Master key with display

The process of enabling the master key with display is described in the following procedural steps:

1. in the special functions (button ”**S**"), call up the ”**Service**" menu
2. In the”**Service**" menu, call up the ”**Master key**" submenu
3. In the ”**Master key**" submenu, select the ”**Master key with display**" point - this is a once-only setting.

Important!

On devices without master key, this setting must be set to ”**No master key**".

10.2 Summary of operating instructions

1. Switch on the master key by pressing the ”**ON**" button (it is permissible to switch this on during the alignment check). The title screen then appears on the LCD.

cardiagn.com

2. On the measuring equipment cabinet, select "**Straight-ahead driving**" for the "**Incoming alignment check**", then "**Adjusting procedure**" or the "**Outgoing alignment check**". The following graphic appears on the LCD monitor for "**Driving straight ahead**".
3. Pressing the "**Forwards arrow**" calls up the next measuring screen. What next appears on the LCD display blocks are a designation of the measured value and a tolerance bar with measured value. If that measured value is within tolerance, this is depicted with black numerals on a light background. If that measured value lies outside the tolerance, it is then displayed in inverted fashion (i.e. light numerals on a dark background).
4. Pressing the "**F**" button briefly makes it possible to alternate between the designation of the measured value and the nominal value with tolerance within the display block.
5. To scroll onwards through the measured values, press the "**Forward arrow**", "**Backward arrow**" and the "**Cancel" keys (red spot)** . The function of this button is identical to that of the buttons/keys on the graphics pad.
6. Even when opting for the "**Alignment check with non-selective access**", the measured values can be chosen in the same way as for the "program-guided alignment check" process.
7. Using the "**Printer**" button enables reports to be printed out during the alignment check. The remote control buttons are only enabled during the measurement and setting process (not in response to customer input, choice of vehicle, etc.).

10.3 Display support

- Measured values with nominal/actual comparison and tolerance bar (nominal values can be displayed by pressing the "**F**" key/button)
- Touchscreen icon for touch-sensitive routines
- Summary of measured values with the latest nominal / actual comparison
- Compensation for lateral runout on wheel rims
- With all other functions (e.g. customer input), the title image appears on the liquid crystal display

Note:

Whenever data transfer from the master key / remote control to the computer is interrupted, the master key icon in the lower right-hand corner of the screen changes colour from green to red and the image on the LCD display is depicted in inverted format, i.e. black becomes white and vice versa. This changeover does not occur in the title image. Once visual connection is re-established, the master key recommences work at the point in the program where the interruption occurred. Continuous visual connection during the alignment check is therefore not necessary.

- The "**Egg timer**" icon on the LCD display indicates: "**Please wait**".
- The "**Battery**" icon in the upper right-hand corner of the LCD display indicates that the battery reserve has been reached.
- Switching off the remote control / master key: Press and hold down the "**F**" key for 5 seconds, then place in the charge bracket or plug in the charging cable. The title image then reappears as the charge indicator light.
- If the master key is placed in the charge bracket during the alignment check process, it must when required be switched on using the "**ON**" key.

11 Updating the software / nominal data

No more diskettes will be sent out to any BMW authorised workshops who in the past subscribed to "**BMW KDS** (Beissbarth / Bosch)". For reasons of cost, it is no longer possible to produce these diskettes in-house on the "**DIS tester**" or on the "**TIS/EPC server**". The data are updated on the TIS-CD on a regular basis

11.1 Prerequisites

- BMW KDS (Beissbarth / Bosch)
- Program status (Beissbarth) TIS-CD: from CD 12/95
- Program status EPC: from 12/95
- Program status (Bosch) TIS-CD: from CD 08/97
- Program status DIS: from V6.0
- Diskettes, 3.5", 1,44 MB (Beissbarth 5 diskettes / Bosch 1 diskette)

11.2 Procedure (Beissbarth)

cardiagn.com

1. Go into screen mask "**Administration**"
2. Select **KDS button**
3. Select **Beissbarth**
4. After request, load "**diskette 1**" and acknowledge with "**OK**" (program diskette 1 of 2 is created, perform labelling operation)
5. After request, load "**diskette 2**" and acknowledge with "**OK**" (program diskette 2 of 2 is created, perform labelling operation)
6. After request, load "**diskette 3**" and acknowledge with "**OK**" (program diskette 1 of 3 is created, perform labelling operation)
7. After request, load "**diskette 4**" and acknowledge with "**OK**" (program diskette 2 of 3 is created, perform labelling operation)
8. After request, load "**diskette 5**" and acknowledge with "**OK**" (program diskette 3 of 3 is created, perform labelling operation)
9. Perform software update and /or nominal data input on the KDS in the usual manner using the manufactured diskettes.

11.3 Procedure (Bosch)

1. Go into screen mask "**Administration**"
2. Select **KDS button**
3. Select **Bosch**
4. Write a name on "**Diskette 3.1**", when prompted to do so, insert in the drive and confirm by pressing "**OK**" (2x) --> nominal values are then copied to the diskettes
5. Load nominal value diskette 3.1 in drive 3.1, load operating system diskette 3.0 in drive 3.0.
6. Boot device in the usual manner

Important!

When producing KDS diskettes, all data on the diskettes used are overwritten.

Note:

Whenever an error occurs, this is displayed and the program aborts. This process needs to be restarted from the very beginning, which involves deleting all data from the diskette. Possibly use a new diskette.

12. Creating, copying and editing nominal data

12.1 Copying

- Press the "**C**" button and select the vehicle which is to be copied.
- In the special function section, select menu item "**Editing of nominal data**". Set up a new vehicle record in the familiar way. Now the data input screen displays the nominal values for the previously selected vehicle. Re-enter the modified data and save the data record.

12.2 Create

- Press the "**C**" button and, in the special function, select the "**Editing of nominal data**" menu item. Set up a new vehicle record in the familiar way. An empty data input screen now appears. Enter the data and save the data record.

12.3 Edit

- Nominal data programmed in the factory cannot be deleted or changed. If these data are changed, a new vehicle record with those amended nominal data needs to be set up. New vehicle records set up by the user are designated as such in the selection menu with a "**+**". These vehicles can be deleted by the user by means of the screen button "**-**" or can be amended using the "**< >** " button. These buttons only appear on the screen if the vehicles were entered in the system by the user.

13. Special functions

13.1 Customer button for printer protocol

In the "**Special function**" menu, the "**Customer-specific text**" submenu can be called up. An input screen appears on the display. A name and address must be added to this input screen and saved by pressing the "**S**" screen button. The text entered is then imprinted in the header of the protocol / report.

13.2 Alignment options

cardiagn.com

- in the special functions (button "**S**"), call up the "**Service**" menu

- In the submenu "**alignment**", select the "**Toe-in alignment**" or the "**Toe-in adjustment**" option. The toe-in and camber alignment program guides the user step by step through the alignment process with the help of text and images. At the end of the adjustment process, the deviation in measuring value from every measuring sensor is displayed on the screen.
- These alignment values can be saved in the measuring pickup memory by pressing "**Save**" or the program can be quit by pressing the "**Red button**" without saving (a checking function). The alignment values can be printed out.

13.3 Turntable test

- in the special functions (button "**S**"), call up the "**Service**" menu
- In the "**Service**" menu, call up the "**Turntable test**" function. Rotate left and right-hand turntables and check the display on the screen. Important: The measuring range is ±306 degrees.

13.4 View and delete customer entries from the database

- In the special functions in the "**Database**" menu, call up the "**Delete**" menu option. The data input screen then appears. Fill in the search boxes with the data to be deleted.
- Using the "**-**" button, this data record can be deleted. It is now possible to use the touchscreen pen to highlight and delete a new data record.
- The screen buttons "**Arrow up**" and "**Arrow down**" enable users to scroll through the entire database.
- To quit the Delete function, press the Cancel button (red spot).

14. Internal program change

Other internal program changes were made which only slightly alter the program run, but which do optimise the alignment check in terms of comfort and speed. This is described in the following pages:

- Optimisation of compensation for lateral runout on wheel rims in relation to speed.
- Optimisation of impact routines: Marking can still be corrected within the gateway. The message "**Turntables not connected**" no longer causes this routine to terminate. Measuring can continue after the turntables have been plugged back in.
- Standardisation of screen colours with the colours on the panel.
- Extension of texts in some foreign languages.
- Elimination of program and cosmetic errors.
- Electronic water scales
- Discontinuation of wheelbase measurement

15. Faults

15.1 Tyre faults

	Error		Impact
1	Tracking, camber, toe difference angle and caster not correct	1	Serious tyre squeak, even at relatively low speeds
2	Too much toe-in or too much positive camber	2	Tyres are worn longitudinally down one outside edge
3	Too much negative camber	3	Tyre wear on inner edge

cardiagn.com

4 Worn front axle suspension points on FWD cars	4 Amplified noise / Vehicle pulls away one-sidedly when accelerating
5 Incorrect toe adjustment	5 Radial adjustment of wheel settings / tyre tread exhibits burr formation within the tread pattern
6 Play in wheel suspension caused by mechanical components (suspension, steering)	6 Washed out areas / wobbling on front wheel
7 Insufficient inflation pressure in the tyre	7 Tyre wear along outer areas

15.2 Front axle fault

Fault	Cause	Remedy
1. Toe deviation	a) Vehicle not in normal position	a) Correct ride height
	b) Tie rod(s) bent	b) Replace tie rod(s)
	c) Ball joints on track rod(s) misaligned	c) Replace tie rod(s)
	d) Rubber mount in control arm faulty	d) Replace control arms
2. Camber deviation: Camber is defined by design and cannot be adjusted.	a) Rubber mount in control arm faulty	a) Replace control arms
	b) Control arm deformed	b) Replace control arms
	c) Spring strut deformed	c) Replace spring strut
	d) Guide joint worn	d) Replace control arms
	e) Spring deflection too great	e) Replace coil spring, ride height

cardiagn.com

	f) Front axle carrier deformed	f) Replacing front axle support
	g) Spring strut shock absorber mount misshapen	g) Repair front end
	h) Distortion in floor assembly (engine carrier)	h) Repair body
3. Castor deviation: Caster is defined by design and cannot be adjusted	a) Rubber mount for tension/traction strut defective	a) Replace rubber mount
	b) Tension/traction strut misshapen	b) Replace tension/traction strut,
	c) Control arm deformed	c) Replace control arms
	d) Spring strut deformed	d) Replace spring strut
	e) Wheel house deformed (spring-strut mount)	e) Repair front end
	f) Distortion in floor assembly (engine carrier)	f) Repair body
4. Toe angle difference deviation	Prerequisite: camber and caster are correct	
	a) Tie rods not adjusted uniformly	a) Adjust toe on left and right sides to same value
5. Wheel-offset deviation	Prerequisite: front wheels have equal single toe to geometrical axis	
	a) Front axle carrier deformed	a) Replacing front axle support
	b) Engine carrier deformed	b) Repair body
	c) Control arm deformed	c) Replace control arms

cardiagn.com

	d) Tension/traction strut misshapen	d) Replace tension/traction strut

15.3 Rear axle defects

Fault	Cause	Remedy
1. Camber deviation	a) Vehicle not in normal position, spring deflection too great	a) Correct ride height
	b) Rubber mount on rear axle carrier unserviceable	b) Replace rubber mount
	c) Rear axle carrier deformed	c) Check rear-axle carrier, replace if necessary
	d) Control arm deformed	d) Check/replace control arm
	e) Traction strut misshapen	e) Check traction strut, replace if necessary
	f) Distortion in floor assembly	f) Repair body
	g) Swinging arm deformed	g) Replace swinging arm
2. Rear-wheel position incorrect	a) Rear axle carrier displaced laterally	a) Check rubber mounts on rear-axle carrier, replace if necessary
	b) Distortion in floor assembly	b) Repair body
3. Toe deviation	a) Vehicle not in normal position, i.e. spring deflection too great	a) Correct ride height
	b) Rubber mounts in rear-axle carrier faulty	b) Replace rubber mount
	c) Control arm deformed	c) Replace control arms
	d) Rubber mount and swinging arm unserviceable	d) Replace swinging arm

cardiagn.com

	e) Rear axle carrier deformed	e) Check rear-axle carrier, replace if necessary
	f) Traction strut misshapen	f) Check traction strut, replace if necessary
4. Deviation from the geometric axis	Prerequisite: rear wheel total toe value must be correct.	
	a) Distortion in floor assembly	a) Repair body

Other notes on the topic of the ”kinematics diagnosis system" can be found in the BMW KDS (Beissbarth / Bosch) operating instructions.

None of the function and system descriptions are covered by an update service. Availability of parts and scope for immediate ordering cannot be derived from this information. The specialist departments shall be in touch with the markets at an appropriate time with further details.

cardiagn.com

36 01 04 (078)

Run Flat Indicator

All models

Introduction

The Run Flat Indicator (RPA) monitors the tyre pressure throughout the journey.

The entire vehicle weight is carried by the tyre pressure in the tyres. If the tyre pressure in one of the tyres should drop, the tyre will gradually "cave in". The resulting flexing means that the faulty tyre will quickly receive additional damage during driving. The tyre could burst.

Some 80% of all punctures are caused by small holes (e.g. caused by nails). The holes result in a gradual loss of tyre pressure in the affected tyre. Many "tyre blowouts" can be traced back to preliminary damage caused by a gradual loss of tyre pressure.

A gradual loss of tyre pressure in one tyre may remain unnoticed for a long time. The lack of tyre pressure only makes itself clearly felt when driving when the tyre is almost completely depressurised.

As tyre pressure drops, the radius of the wheel and with it the tyre rolling circumference will also decrease. The upshot is that the wheel speed of the affected tyre is increased. The RPA records the wheel speeds using the wheel-speed sensors of the Dynamic Stability Control (DSC). The Run Flat Indicator compares the speeds of the individual wheels and computes an average speed. In this way the RPA is able to detect a loss of tyre pressure.

The RPA detects a drop in pressure below about 30 % ± 10 % of the initial value. The RPA indicator and warning light indicates a drop in tyre pressure. The RPA will indicate this after just a short distance, as a rule after a few minutes, from a certain minimum speed (e.g. 25 km/h) up to the permissible top speed.

> Different control units for the Run Flat Indicator [System overview ...]

> E46 All-wheel drive [System overview ...]

> E46, E53, E83, E85, E86 [System overview ...]

> E60, E61, E63, E64 [System overview...]

> E65, E66 [System overview...]

> E70 [System overview ...]

> E87, E90, E91, E92, E93 [System overview ...]

cardiagn.com

> R56 [System overview ...]

Despite coming from different manufacturers the systems hardly differ from one model series to the next in the way they appear to the driver (initialisation, Run Flat Indicator telltale and warning lamp, characteristics, diagnosis).

Caution! Responsibility resides with the driver at all times

Check tyre pressures regularly, at least twice a month and before embarking on lengthy journeys. During initialisation, the set tyre pressure is taken as the initial value for the current set of tyres.

If all 4 tyres lose tyre pressure at the same rate, the wheel speeds will also change at the same rate. The Run Flat Indicator is unable to detect a uniform drop in pressure in all tyres (e.g. due to diffusion = natural loss of air from all 4 tyres)

Caution! Correct function of the Run Flat Indicator is not guaranteed when the compact spare wheel is fitted.

As the compact spare wheel has a much smaller diameter, the correct operation of the Run Flat Indicator can no longer be guaranteed.

Brief component description

The SMG system comprises the following key components:

- **4 wheel speed sensors**

  The wheel speed sensors of the Dynamic Stability Control (DSC) measure the wheel speeds of the individual wheels.

- **Run Flat Indicator button**

  > E46, E53, E83, E85, E86

  The Run Flat Indicator button is only needed for initialising the RPA. (Run Flat Indicator initialisation means "teaching the system the tyre pressures").

- **CID: Central information display**

  Vehicles that are equipped with CID are initialised using the CID.

- **On-board computer button and rocker button on the turn signal/high beam switch**

  > E87, E90, E91, E92, E93, R56

  Initialisation is performed on the liquid crystal display, using the on-board computer button and the rocker switch on the turn signal/high beam switch. The on-board computer functions are selected with the rocker switch.

  The R56 does not have a rocker switch. The on-board computer functions are selected with the on-board computer button.

The Run Flat Indicator software is in the following control units, depending on model series:

- **Run Flat Indicator control unit**

  E46 all-wheel drive vehicles

  The E46 all-wheel drive vehicle has a separate Run Flat Indicator control unit. The 4 wheel speed sensors measure the wheel speeds. The DSC control unit sends the signals through 4 direct lines to the Run Flat Indicator control unit.

or

- **DSC control unit with additional software for flat tyre monitor**

  > R56

  The ABS control unit is standard equipment on the R56. Run Flat Indicator is integrated into the DSC control unit by means of additional software.

or

- **DSC control unit with additional software for flat tyre monitor**

  > R56

  ASC+T is optional equipment on the R56 (ASC+T: Automatic Stability Control + Traction (ASC+T)). Run

cardiagn.com

Flat Indicator is integrated into the ASC+T control unit by means of additional software.

or

- **DSC control unit with additional software for flat tyre monitor**

  > E46, E53, E60, E61, E63, E64, E70, E83, E85, E86, E87, E90, E91, E92, E93

  > R56: Optional equipment

  With the DSC Mk60 and the DSC 8, the Run Flat Indicator is integrated into the DSC control unit using additional software (the E70 is equipped with DSC 8 Premium).

or

- **CIM: Chassis integration module**

  > E65, E66

  The CIM controls:

  - Servotronic
  - Steering column adjustment
  - Run Flat Indicator (RPA)

The following control units are involved in the Run Flat Indicator system (in alphabetical order):

- **CAS: Car Access System**

  > E60, E61, E63, E64, E65, E66, E70, E87, E90, E91, E92, E93, R56

  The CAS control unit provides input signals relating to terminal status (e.g. terminal 15 ON).

- **GM: Basic module**

  > E46, E53, E83, E85, E86

  The basic module provides input signals relating to terminal status (e.g. terminal 15 ON).

- **JBE: Junction Box Electronics**

  > E70, E87, E90, E91, E92, E93, R56

  The JBE is the data interface (= gateway) between the K-CAN and the PT-CAN. (K-CAN stands for "Body Controller Area Network"; PT-CAN stands for "Powertrain Controller Area Network")

  The junction box consists of the junction box electronics and the power distribution box.

- **KGM: Body gateway module**

  > E60, E61, E63, E64 from 09/2005

  The body gateway module (KGM) replaces the safety and gateway module (SGM).

  The KGM forms the data interface (= gateway) between the K-CAN and the PT-CAN.

- **M-ASK or CHAMP or CCC: Multi-audio system controller or multimedia platform or Car Communication Computer**

  M-ASK or CCC or CHAMP (multimedia platform: CHAMP; Central Head Unit and Multimedia Platform) issues an acoustic warning through the speakers if the tyre pressure should drop.

  (On vehicles without M-ASK or CCC or CHAMP, the instrument panel will emit the warning.)

- **SGM: Safety and gateway module**

  > E60, E61, E63, E64 up to 09/2005

  > E65, E66 from 03/2004

  The SGM is the data interface (= gateway) between the K-CAN, **byteflight** and the PT-CAN.

- **SZL: Steering column switch cluster**

  > E87, E90, E91, E92, E93, R56

  The signals from the on-board computer button and from the rocker switch are recorded and processed in the SZL. The data is transmitted to the instrument panel (on-board computer).

- **ZGM: Central gateway module**

cardiagn.com

> E65, E66 up to 03/2004

The ZGM forms the data interface (= gateway) between the K-CAN and the PT-CAN.

- **KOMBI and CID: Instrument panel and Central Information Display**

  A fault in the Run Flat Indicator or drop in tyre pressure will be indicated by the Run Flat Indicator telltale and warning lamp in instrument panel.

  At the same time, the symbol will light up in the liquid crystal display.

  Fault statuses registered by the Run Flat Indicator are indicated as follows by the Run Flat Indicator telltale and warning lamp (for deviations, please refer to national-market version):

  - The Run Flat Indicator telltale and warning lamp lights up:
    - **Red** (with acoustic signal):

      The tyre pressure loss is more than approx. 30 % ± 10 %. Driving safety is no longer guaranteed.
    - **Yellow:**

      Run Flat Indicator failed

  Information about the check control message can be called up in the CID (CID is fitted depending on the vehicle equipment).

  [more ...]

System functions

The Run Flat Indicator (RPA) comprises the following functions:

- Self-test
- Initialisation
- Detects drop in tyre pressure
- Visual and acoustic warning
- Actively relieve faulty wheel (only E70)

Self-test

The Run Flat Indicator performs a self-test when terminal 15 is switched ON. A fault in the Run Flat Indicator is indicated by the Run Flat Indicator telltale and warning lamp and by a symbol in the liquid crystal display.

cardiagn.com

Initialisation

Initialisation is started manually (e.g. by pressing the Run Flat Indicator button). Once it has been started, initialisation will continue through to complete calibration. This process may be interrupted any number of times.

It is important that the vehicle is driven away immediately after initialisation is started. The system will not start calibration until the vehicle is driven away. Even a terminal change will not change this.

In principle, calibration is only possible while the vehicle is being driven (driving speeds above 25 km/h).

Initialisation will run as a fully automatic calibration sequence (after the journey has started),. In other words, the circumference of individual tyres are recorded and evaluated.

To allow a drop in tyre pressure to be detected, the system considers different speed ranges and driving situations. Taking account of the driving situation means that the system has to be primed for each speed range individually.

From 09/2004 (starting with E87), these speed ranges and driving situations have been combined into 3 calibration ranges. This means greater clarity for output via the BMW diagnosis systems Group Tester One (GT1) and DISplus.

The initialisation phase lasts approx. 5 to 15 minutes for the individual speed ranges. The end of the initialisation phase is not indicated.

A visual and acoustic warning can only be emitted in the speed ranges that have been calibrated by at least 67 percent.

The calibration process can be delayed by:

- dynamic driving style
- a road with lots of bends
- frequent changes in load (only on vehicles with self-levelling suspension -> control of the air springs/self-levelling suspension)

Detects drop in tyre pressure

The Run Flat Indicator records the wheel speeds using the wheel speed sensors from the DSC. The Run Flat Indicator compares the speeds of the individual wheels and computes an average speed. In this way the RPA is able to detect a loss of tyre pressure. (In the event of a tyre losing pressure, the tyre rolling circumference of the affected tyre is also reduced.)

Visual and acoustic warning

A drop in tyre pressure in one tyre of approx. 30 % ± 10 % from the initial value is indicated by the Run Flat Indicator telltale and warning lamp. In addition, an acoustic signal sounds.

Signal output: Depending on the model concerned, either via the instrument panel or the multi-audio system controller (M-ASK) / Car Communication Computer (CCC).

Note: DSC fault

The sensors used by the Run Flat Indicator are all monitored by the DSC. If DSC detects a fault, the Run Flat Indicator will also register a fault.

Actively reducing load on faulty wheel

> E70

If the Run Flat Indicator detects a puncture on one of the wheels on the rear axle, the self-levelling suspension will actively reduce the load on the wheel concerned. The body may then assume a slight incline. As soon as the puncture has been repaired and the Run Flat Indicator reinitialised, the incline will be levelled out again. No repair work is needed on the air suspension itself.

Special conditions for system function

The following **driving conditions** may cause a **delay in the warning** being given in the event of a drop in tyre pressure:

- Heavy braking

cardiagn.com

- Rapid acceleration
- High rate of lateral acceleration
- Cornering (in a tight corner)
- Vehicle speed dropping below a minimum speed (the Run Flat Indicator only responds when a certain minimum speed has been reached)
- Large difference in slip (between axles or between wheel on one side of vehicle)
- Initialisation not being completed in current speed range (see "Controls")
- Winter conditions
- Heavy changes in load (only vehicles with self-levelling suspension)

The following **operating conditions** may cause a **delay in the warning** being given in the event of a drop in tyre pressure:

- Driving with snow chains fitted

  Driving with snow chains may impair the correct function of the Run Flat Indicator.

  The system will work as normal again after the snow chains have been removed and the vehicle is driven for a few minutes. (Repeat initialisation not necessary.)

Note: Do not perform initialisation when snowchains are fitted.

Initialisation and snow chains will cause incorrect adaptation values.

- Trailer towing

  Initialisation is required for trailer loads exceeding approx. 300 kg. Perform initialisation again after attaching or removing the trailer.

- Old/new tyres

Note: Only fit tyres with the same tread depth!

Avoid fitting tyres with greatly different tread depth (from approx. 2 millimetres) on one axle. The different diameters mean that the correct operation of the Run Flat Indicator is no longer guaranteed.

The following situations may cause **unnecessary warnings**:

- Initialisation not completed after a tyre has been replaced (old/new tyres, summer/winter tyres, change in direction of rotation, or replacement of single faulty tyre) tyre pressures have been changed
- Tyres have different levels of wear
- Frequent changes in load (only on vehicles with self-levelling suspension)
- Tyres that have not been approved by BMW
- Damaged tyres, even if no loss of tyre pressure can be detected (e.g. radial runout)
- Tyre has changed slightly during the running-in phase (settling)

In the following cases, the system will **not emit a warning despite a drop in tyre pressure being detected**:

- The same amount of pressure is lost in 2 or more tyres.
- Drops in tyre pressures caused by diffusion and affecting all 4 tyres equally
- If a tyre is damaged with a sudden loss of all pressure (tyre blowout, warning is given too late)

Operation

The Run Flat Indicator (RPA) is initialised using the following operating elements:

- Run Flat Indicator button
- On-board computer button on turn signal/high beam switch
- With control centre in the Central Information Display (CID) with the controller

Caution! Always perform initialisation immediately after correcting the tyre pressure, especially if a wheel is changed or the wheels are interchanged. Only check tyre pressures when the tyres are cold.

Set the tyres to the correct pressure before performing initialisation. During initialisation, the set tyre pressure is taken as the initial value for the current set of wheels.

Correct the tyre pressures when the tyres are cold to prevent the data recorded from being affected by temperature.

Caution! Responsibility resides with the driver at all times

cardiagn.com

Check tyre pressures regularly, at least twice a month and before embarking on lengthy journeys. During initialisation, the set tyre pressure is taken as the initial value for the current set of tyres.

Initialise the Run Flat Indicator in the following situations:

- If tyre pressure is changed

  (tyre pressure is corrected or reset)
- If the position of the tyres is changed (change of axles, wheels), even if the tyre pressure is not changed
- If a tyre is changed or the wheels are interchanged

  (e.g. old tyres for new tyres, summer tyres for winter tyres, etc.)

Start initialisation as follows:

- Terminal 15 ON

  (engine OFF or ON, do not pull away)
- Vehicles **with** Run Flat Indicator button
  - Press and hold the Run Flat Indicator button until the Run Flat Indicator telltale and warning lamp lights up yellow for a few seconds
- Vehicles **with** on-board computer button (on-board computer function)
  - In the on-board computer function select "RPA" and "INIT" (liquid crystal display) with the rocker switch on the turn signal/high beam switch. Press the on-board computer button to confirm.
  - Press and hold the on-board computer button for approx. 5 seconds, until a box with a tick appears behind the "INIT" display.

  > R56:
  - In the on-board computer function select "SET/INFO" (liquid crystal display in auxiliary instrument) with the on-board computer button on the turn signal/high beam switch.
  - Press and hold the on-board computer button until the display changes
  - Press the on-board computer button repeatedly until the corresponding symbol and the word "RESET" are displayed.
  - Press and hold the on-board computer button until a square with a tick appears.
- Vehicles with Central Information Display

  Initialisation is performed via the Central Information Display (CID) and controller.
  - Select "RPA" in the "Settings" menu and confirm.
  - Select "Set" and confirm.
- Drive off

The end of the initialisation phase is not indicated.

Switch-on conditions

The Run Flat Indicator (RPA) is automatically activated when terminal 15 is switched ON. The Run Flat Indicator cannot be switched off manually.

Notes for Service department

Observe the following information for service:

- General information: [more ...]
- Diagnosis: ---
- Encoding/programming: [more ...]

National-market version for US

A puncture is indicated as follows:

> E53, E83, E85, E86

Yellow Run Flat Indicator telltale and warning lamp **without** acoustic signal

> E60, E61, E63, E64, E65, E66, E70, E90, E91, E92, E93, R56

Yellow Run Flat Indicator telltale and warning lamp **with** acoustic signal

An RPA failure is indicated as follows:

cardiagn.com

- Yellow Run Flat Indicator telltale and warning lamp **without** acoustic signal

Subject to change.

cardiagn.com