2 0 0 1
VOLVO
S80

This manual deals with the operation and care of your Volvo.

This manual deals with the operation and care of your Volvo

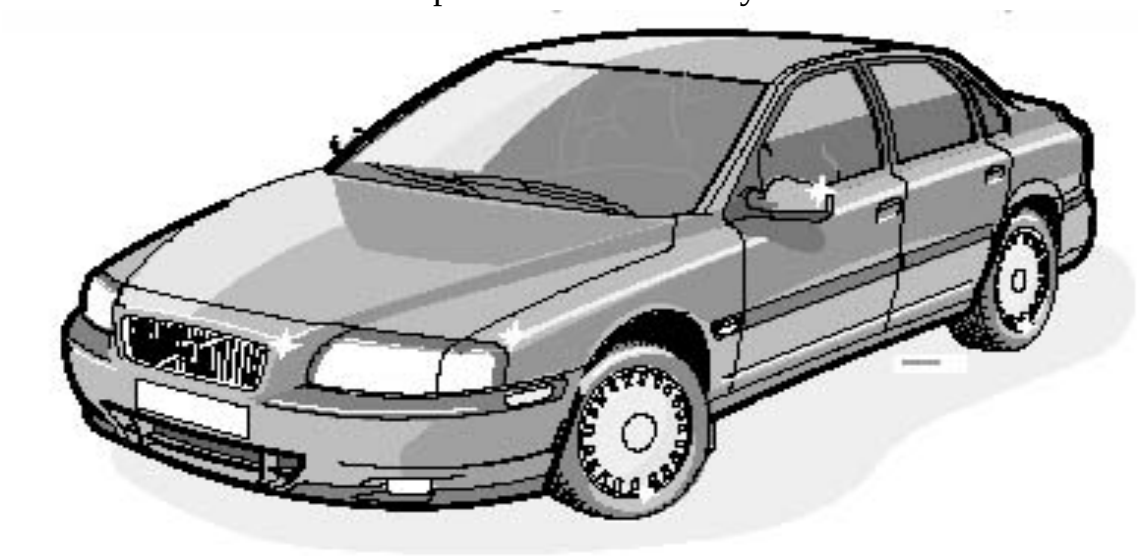

Welcome to the world-wide family of Volvo owners. We trust that you will enjoy many years of safe driving in your Volvo, an automobile designed with your safety and comfort in mind. To help ensure your satisfaction with this vehicle, we encourage you to familiarize yourself with the equipment descriptions, operating instructions and maintenance requirements/recommendations in this manual. We also urge you and your passengers to wear seat belts at all times in this (or any other) automobile. And, of course, please do not operate a vehicle if you may be affected by alcohol, medication or any impairment that could hinder your ability to drive.

Your Volvo is designed to meet all applicable safety and emission standards, as evidenced by the certification labels attached to the driver's door opening and on the left wheel housing in the engine compartment.

For further information please contact your retailer, or:

In the USA:	In Canada:
Volvo Cars of North America	Volvo Canada Ltd.
Customer Relations	175 Gordon Baker Road
P.O. Box 914	Willowdale, Ontario M2H 2N7

Rockleigh, New Jersey 07647-0914

800-663-8255

800-458-1552

We also invite you to visit our Home Page on the Internet at:

http://www.volvocars.com

Contents

Contents

Chapter 1 - Safety

Chapter 2 - Instruments, switches and controls

Chapter 3 - Climate control system

Chapter 4 - Interior

Chapter 5 - Keys, Locks, Alarm

Chapter 6 - Starting and driving

Chapter 7 - Wheels and tires

Chapter 8 - Maintenance/Servicing

Chapter 9 - Specifications

Chapter 10 - Audio systems

HomeLink® Universal Transceiver (option)

Index

© 1998 Volvo Cars of North America Inc.

General information

Shiftlock

When your car is parked, the gear selector is locked in the (P)ark position. To release the selector from this position, turn the ignition key to position II (or start the engine), depress the brake pedal, press the button on the front side of the gear selector and move the selector from (P)ark.

Keylock

This means that when you switch off the ignition, the gear selector must be in the (P)ark position before the key can be removed from the ignition switch.

Anti-lock Brake System (ABS)

The ABS system in your car performs a self-diagnostic test when the vehicle first reaches the speed of approximately 12 mph (20 km/h). The brake pedal will pulsate several times and a sound may be audible from the ABS control module. This is normal.

Fuel tank cover The fuel tank cover, located on the right rear fender, is connected to your car's central locking system. The driver's door must be unlocked before the fuel tank cover can be opened.

Fuel filler cap

After refueling, close the fuel filler cap by turning it clockwise until it *clicks* into place If this cap is not closed tightly or if the engine is running when the car is refueled, the Malfunction Indicator Lamp ("Check Engine" light) may indicate a fault.

Important

Before you operate your car for the first time, please familiarize yourself with the BREAK-IN information on page 62. You should also be familiar with the information in the first three chapters of this manual.

Information contained in the balance of the manual is extremely useful and should be read after operating the vehicle for the first time.

The manual is structured so that it can be used for reference. For this reason, it should be kept in the car for ready access.

Do not export your Volvo to another country before investigating that country's applicable safety and exhaust emission requirements. In some cases it may be difficult or impossible to comply with

these requirements. Modifications to the emission control system(s) may render your Volvo not certifiable for legal operation in the U.S., Canada and other countries.

All information, illustrations and specifications contained in this manual are based on the latest product information available at the time of publication. Please note that some vehicles may be equipped differently, depending on special legal requirments and that optional equipment described in this manual may not be available in all markets.

Volvo reserves the right to make model changes at any time, or to change specifications or design, without notice and without incurring obligation.

Volvo and the environment

Volvo is committed to the well being of our customers. As a natural part of this commitment, we care about the environment in which we all live. Caring for the environment means an everyday involvement in reducing our environmental impact.

Volvo's environmental activities are based on a holistic view, which means we consider the overall environmental impact of a product throughout its complete life cycle. In this context, design, production, product use, and recycling are all important considerations.

In production, Volvo has partly or completely phased out several chemicals including freons, lead chromates, naphtanates, asbestos, mercury and cadmium; and reduced the amount of chemicals used in our plants 50% since 1991.

In use, Volvo was the first in the world to introduce into production a three-way catalytic converter with a Lambda sond, now called oxygen sensor, in 1976. The current version of this highly efficient system reduces emissions of harmful substances (CO, HC, NOx) from the exhaust pipe by approximately 95% and the search to eliminate the remaining emissions continues. Volvo is the only automobile manufacturer to offer CFC-free retrofit kits for the air conditioning system for all models as far back as the M/Y 1975 240. Advanced electronic engine controls, refined purification systems and cleaner fuels are bringing us closer to our goal.

After Volvo cars and parts have fulfilled their use, recycling is the next critical step in completing the life cycle. The metal content is about 75% of the total weight of a car, which makes the car among the most recycled industrial products. In order to have efficient and well controlled recycling, many Volvo variants have printed dismantling manuals, indicating the weight and material of individual components. For Volvo, all homogeneous plastic parts weighing more than 1.7 oz. (50 grams) are marked with international symbols that indicate how the component is to be sorted for recycling.

In addition to continuous environmental refinement of conventional gasoline-powered internal combustion engines, Volvo is actively looking at advanced technology alternative-fuel vehicles.

When you drive a Volvo, you become our partner in the work to lessen the car's impact on the environment.

To reduce your vehicle's environmental impact, you can:

· Maintain proper air pressure in your tires. Tests have shown decreased fuel economy with improperly inflated tires

· Follow the recommended maintenance schedule

· Drive at a constant speed

· See an authorized Volvo retailer as soon as possible for inspection if the check engine (malfunction indicator) lamp illuminates, or stays on after the vehicle has started

· Properly dispose of any vehicle related waste such as used motor oil, used batteries, brake pads, etc.

· When cleaning your car, use Volvo's own car care products, all of which have systematically been adapted to the environment.

For additional information regarding the environmental activities inwhich Volvo Cars of North America, Inc. and Volvo Car Corporation are involved, visit our Internet Home Page at:

http://www.volvocars.com

Top of Page

2 0 0 1
VOLVO
S80

Chapter 1 - Safety

pg. 1 Safety

Not wearing a seat belt is like believing "It'll never happen to me!" Volvo, the inventor of the three-point seat belt, urges you and all adult occupants of your car to wear seat belts and ensure that children are properly restrained, using an infant, car or booster seat determined by age, weight and height. Volvo also believes no child should sit in the front seat of a car.

Fact: In every state and province, some type of child-restraint legislation has been passed. Additionally, most states and provinces have already made it mandatory for occupants of a car to use seat belts.

So, urging you to "buckle up" is not just our recommendation - legislation in your state or province may mandate seat belt usage. The few seconds it takes to buckle up may one day allow you to say, "It's a good thing I was wearing my seat belt."

Seat belts 2

Center head restraint 3

Front airbags (SRS) 4

Side impact airbags (SIPS) 8

Volvo Inflatable Curtain (VIC) 9

Whiplash Protection System (WHIPS) 10

Occupant safety 11

Child safety 12

Brake system 16

Anti-lock Brake System (ABS) 17

Stability Traction Control (STC) 18

Dynamic Stability and Traction Control (DSTC) 18

pg. 2 Seat belts

Seat belts
Always fasten the seat belts before you drive or ride. **A chime will sound several times if the driver has not fastened his seat belt.**

To buckle:

Pull the belt out far enough to insert the latch plate into the receptacle until a distinct click is heard. The seat belt retractor is normally "unlocked" and you can move freely, provided that the shoulder belt is not pulled out too far. The retractor will lock up as follows:
· if the belt is pulled out rapidly
· during braking and acceleration
· if the vehicle is leaning excessively
· when driving in turns

For the seat belt to provide maximum protection in the event of an accident, it must be worn correctly. When wearing the seat belt remember:
· The belt should not be twisted or turned.
· The lap belt must be positioned low on the hips (not pressing against the abdomen).

Make sure that the shoulder belt is rolled up into its retractor and that the shoulder and lap belts are taut.

Before exiting the car, check that the seat belt retracts fully after being unbuckled.
If necessary, guide the belt back into the retractor slot.

NOTE: Legislation in your state or province may mandate seat belt usage.
Adjusting shoulder belt

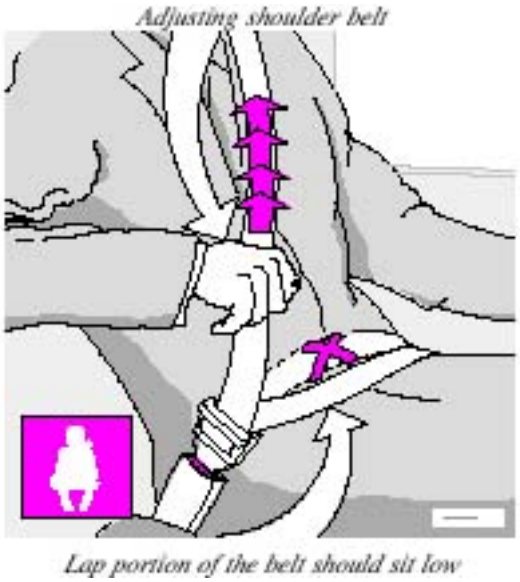

Lap portion of the belt should sit low

Child seats: Please refer to page 14 for information on securing child seats with the seat belts.

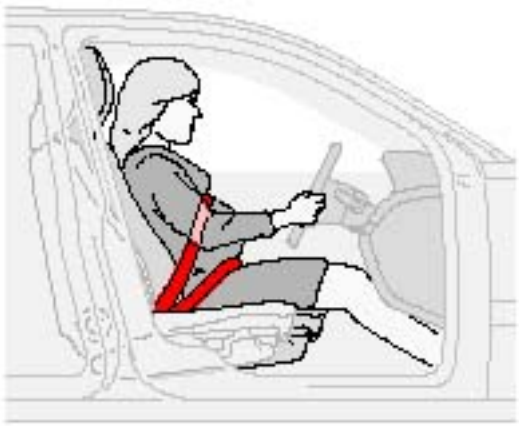

During pregnancy Pregnant women should always wear seat belts. Remember that the belt should always be positioned in such a way as to avoid any possible pressure on the abdomen. The lap portion of the belt should be located low, as shown in the above illustration.

pg. 3 Seat belts, Center head restraint

WARNING!

· Never use a seat belt for more than one occupant.

· Never wear the shoulder portion of the belt under the arm, behind the back or otherwise out of position. Such use could cause injury in the event of an accident.

· As the seat belts lose much of their strength when exposed to violent stretching, they should be replaced after any collision, even if they appear to be undamaged.

· Never repair the belt on your own; have this work done by an authorized Volvo retailer only.

· Any device used to induce slack into the shoulder belt portion of the three-point belt system will have a detrimental effect on the amount of protection available to you in the event of a collision.

· The seat back should not be tilted too far back. The shoulder belt must be taut in order to function properly.

· Do not use child safety seats or child booster cushions/backrests in the front passenger's seat. We also recommend that children who have outgrown these devices sit in the rear seat with the seat belt properly fastened.

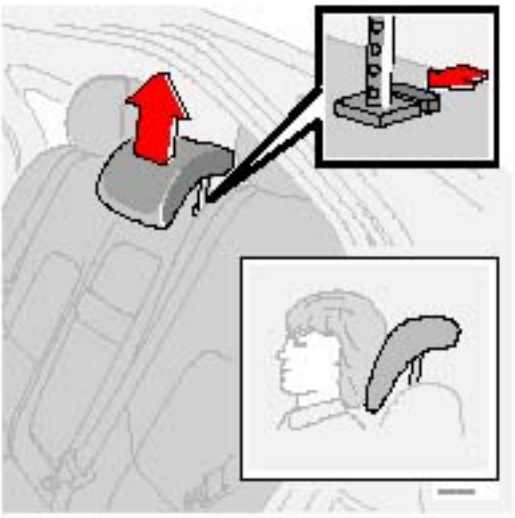

Adjust head restraint height

Adjust head restraint height

Center head restraint

The center head restraint can be adjusted according to the passenger's height. The restraint should be

carefully adjusted to support the occupant's head.

The head restraint can be **raised** by pulling straight up or **lowered** by pressing the catch at the base of the left head restraint support and pushing down.

pg. 4 Front airbags - SRS

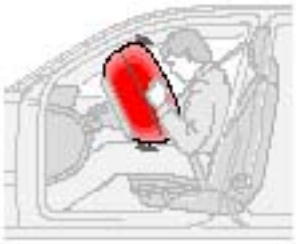

Driver's side airbag - in steering wheel hub

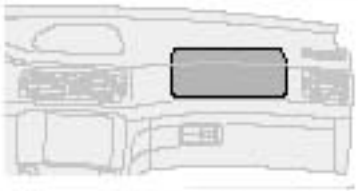

Passenger's side airbag - above glove compartment

As an enhancement to the three-point seat belt system, your Volvo is equipped with a Supplemental Restraint System (SRS). The Volvo SRS consists of an airbag (2) on both the driver's and passenger's sides and seat belt tensioners in both front door pillars (4). The system is designed to supplement the protection provided by the three-point seat belt system. All three rear seat belts are also equipped with tensioners.

The SRS system is indicated by the "SRS" embossed on the steering wheel pad and above the glove compartment, and by decals on both sun visors and on the far right side of the dash.

The airbags are folded and located in the steering wheel hub and above the glove compartment. They are designed to deploy during certain frontal or front-angular collisions, impacts, or decelerations, depending on the crash severity, angle, speed and object impacted. The airbags may also deploy in certain non-frontal collisions where rapid deceleration occurs.

The airbag system includes gas generators (1) surrounded by the airbags (2) and front seat belt tensioners for both of the front seats (4). To deploy the system, the sensor (3) activates the gas generators causing the airbags to be inflated with nitrogen gas. As the movement of the seats' occupants compresses the airbags, some of the gas is expelled at a controlled rate to provide better cushioning. Both seat belt tensioners also deploy, minimizing any seat belt slack.

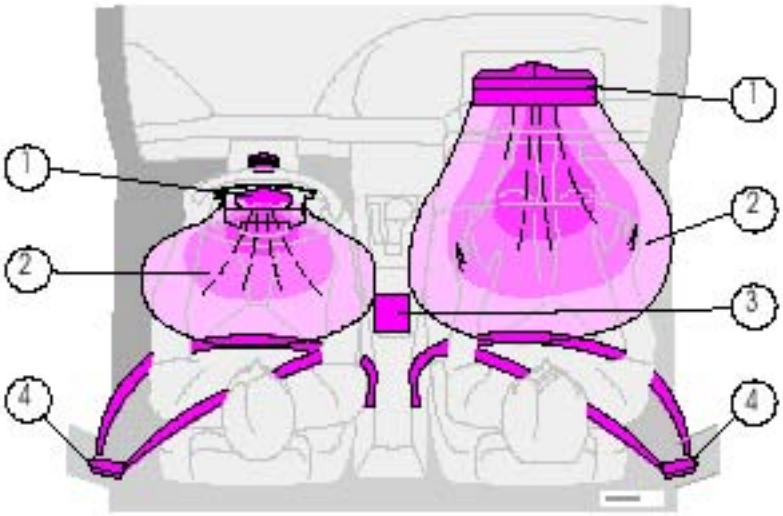

The entire process, including inflation and deflation of the airbags, takes approximately two-tenths of a second.

WARNING!

· As its name implies, SRS is designed to be a SUPPLEMENT to - not a replacement for - the three-point belt system. For maximum protection, wear seat belts at all times. Be aware that no system can prevent all possible injuries that may occur in an accident.

· When installing any optional equipment, make sure that the SRS system is not damaged. Do not attempt to service any component of the SRS yourself. Attempting to do so may result in serious personal injury. If a problem arises, take your car to the nearest authorized Volvo retailer for inspection as soon as possible.

pg. 5 Front airbags - SRS

A self-diagnostic system incorporated in the sensor monitors the SRS, SIPS and IC-system. This system does not, however, monitor the Side Impact Protection System (SIPS) airbags. If a fault is detected, the warning light will illuminate. The light is included in the warning/indicator light cluster in the

instrument panel. Normally, the SRS warning lamp should light up when the ignition key is turned to positions I, II or III and should go out after 7 seconds or when the engine is started. Check that this light is functioning properly every time the car is started.

The following items are monitored by the self-diagnostic system:
· Sensor unit
· SRS wiring
· Inflators

WARNING!

· Never drive an SRS equipped car with your hands on the steering wheel pad / airbag housing.
· No objects, accessory equipment or stickers may be placed on, attached to or installed near the SRS cover in the center of the steering wheel, the SRS cover above the glove compartment or the area affected by airbag deployment.
· If the SRS warning light stays on after the engine has started or if it comes on while you are driving, drive the car to the nearest authorized Volvo retailer for inspection as soon as possible.

The above is a sample of the label found on all seat belts equipped with tensioners, located on the front seat belts near the lower anchorage point.

The above is a sample of the decal which can be found on the edge of the left rear door.

There is no maintenance to perform on the SRS yourself. The month and year shown on the decal on the door pillar indicate when you should contact your Volvo retailer for specific servicing or replacement of airbags and seatbelt tensioners. This service must be performed by an authorized Volvo retailer.

Should you have any questions about the SRS system, please contact

your authorized Volvo retailer or Volvo Customer Support:

In the USA: In Canada:

Volvo Cars of North America
Customer Relations
P.O. Box 914
Rockleigh, New Jersey 07647-0914
800-458-1552

Volvo Cars of Canada Ltd.
175 Gordon Baker Road
Willowdale, Ontario M2H 2N7
1-800-663-8255

pg. 6 Front airbags - SRS

SRS texts on outside of both sun visors

SRS texts on inside of both sun visors

SRS texts on the passenger's dash

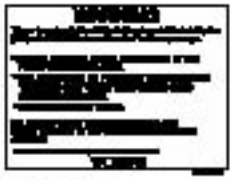

SRS decals at far right of instrument panel

WARNING!
Do not use child safety seats or child booster cushions/backrests in the front passenger's seat. We also recommend that children under 4 feet 7 inches (140 cm) in height who have outgrown these devices sit in the rear seat with the seat belt fastened.

NOTE: Deployment of SRS components occurs only one time during an accident. In a collision where deployment occurs, the air bags and seat belt tensioners activate. Some noise occurs and a small amount of powder is released. The release of the powder may appear as smoke-like matter. This is a normal characteristic and does not indicate fire.

NOTE: Volvo's dual-threshold air bags use special sensors that are integrated with the front seat buckles. The point at which the air bag deploys is determined by whether or not the seat belt is being used, as well as, the severity of the collision. Collisions can occur where only one of the airbags deploys.

NOTE: Volvo's dual-stage airbags: If the impact is less severe, but severe enough to present a clear injury risk, the dual-stage airbags are triggered at just 70% of its total capacity. If the impact is more severe, the dual-stage airbags are triggered with full capacity.

WARNING!

· Children must never be allowed in the front passenger seat. Volvo recommends that ALL occupants (adults and children) shorter than 4 feet 7 inches (140 cm) be seated in the back seat of any vehicle with a front passenger side airbag.
· Occupants in the front passenger's seat must never sit on the edge of the seat, sit leaning toward the instrument panel or otherwise sit out of position. The occupant's back must be as upright as comfort allows and be against the seat back with the seat belt properly fastened.
· Feet must be on the floor, e.g. not on the dash, seat or out of the window.
· No objects or accessory equipment, e.g. dash covers, may be placed on, attached to or installed near the SRS hatch (the area above the glove compartment) or the area affected by airbag deployment (see illustration).
· There should be no loose articles, e.g. coffee cups, on the floor, seat or dash area.
· Never try to open the SRS cover on the steering wheel or the passenger side SRS seam. This should only be done by an authorized Volvo service technician.
· Failure to follow these instructions can result in injury to the vehicle occupants in an accident.

pg. 7 Front airbags - SRS

NOTE: The information on this page does not pertain to the Side Impact Protection System airbags.

When are the airbags deployed?

The SRS system is designed to deploy during certain frontal or frontangular collisions, impacts, or decelerations, depending on the crash severity, angle, speed and object impacted. The SRS sensor is designed to react to both the impact of the collision and the inertial forces generated by it and to determine if the intensity of the collision is sufficient for the airbags to be deployed.

WARNING!

The SRS is designed to help prevent serious injury. Deployment occurs very quickly and with considerable force. During normal deployment and depending on variables such as seating position, one may experience abrasions, bruises, swellings, or other injuries as a result of airbag(s) deployment.

If the airbags have been deployed, we recommend the following:
· Have the car towed to an authorized Volvo retailer. Never drive with the airbags deployed.
· Have an authorized Volvo retailer replace the SRS system components.
· Use only new, Genuine Volvo Parts when replacing SRS components (airbags, seat belts, tensioners, etc.).

When are the airbags NOT deployed? Not all frontal collisions activate the SRS system. If the collision involves a nonrigid object (e.g., a snow drift or bush), or a rigid, fixed object at a low speed, the SRS system will not necessarily deploy. Front airbags do not normally deploy in a side impact collision, in a collision from the rear or in a rollover situation. The amount of damage to the bodywork does not reliably indicate if the airbags should have deployed or not.

Seat belts the heart of the Volvo safety system The heart of the Volvo safety system is the **threepoint seat belt** (a Volvo invention)! In order for the SRS system to provide the protection intended, seat belts must be worn at all times by everyone in the car. **The SRS system is a supplement to the seat belts.**

WARNING!

If your car has been subjected to flood conditions (e.g. soaked carpeting/standing water on the floor of the vehicle) or if your car has become flooddamaged in any way, do not attempt to start the vehicle or put the key in the ignition before disconnecting the battery (see below). This may cause airbag deployment which could result in personal injury. Have the car towed to an authorized Volvo retailer for repairs.

Automatic transmission:

Before attempting to tow the car, use the following procedure to override the shiftlock system to move the gear selector to the neutral position.
· Switch off the ignition for at least 10 minutes and disconnect the battery
· Wait at least one minute
· Insert the key in the ignition and turn it to position II
· Press firmly on the brake pedal.
· Move the gear selector from (P)ark to the (N)eutral position.

WARNING!

Never drive with the airbags deployed. The fact that they hang out can impair the steering of your car. Other safety systems can also be damaged. The smoke and dust formed when the airbags are deployed can cause skin and eye irritation in the event of prolonged exposure.

pg. 8 Side impact airbags (SIPS)

*SIPS airbag **

SIPS airbag (front seats only)

As an enhancement to the structural Side Impact Protection System built into your car, the car is also equipped with Side Impact Protection System (SIPS) airbags. The SIPS airbag system consists of airbag modules built into the sides of both front seat backrests (1), wires (2) and gas generators/sensor units (3).

The SIPS airbag system is designed to help increase occupant protection in the event of certain side impact collisions. The SIPS airbags are designed to deploy only during certain sideimpact collisions, depending on the crash severity, angle, speed and point of impact. The airbags are not designed to deploy in all side impact situations.

NOTE: SIPS airbag deployment (one airbag) occurs only on the side of the vehicle affected by the impact.

WARNING!

· The SIPS airbag system is a supplement to the Side Impact Protection System and the threepoint seat belt system. It is not designed to deploy during collisions from the front or rear of the car or in rollover situations.
· The use of seat covers on the front seats may impede SIPS airbag deployment.
· No objects, accessory equipment or stickers may be placed on, attached to or installed near, the SIPS airbag system or in the area affected by SIPS airbag deployment (see illustration to the right above).
Never try to open or repair any components of the SIPS airbag system. This should only be done by an authorized Volvo service technician.
· In order for the SIPS airbag to provide its best protection, both front seat occupants should sit in an upright position with the seat belt properly fastened.

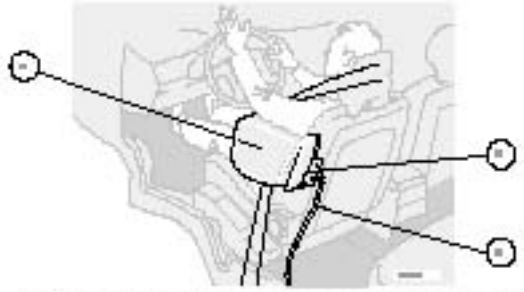

1 - Airbag, 2 - wire, 3 - gas generator/sensor unit

WARNING!
· Never drive with the airbags deployed. The fact that they hang out can impair the steering of your car. Other safety systems can also be damaged. The smoke and dust formed when the airbags are deployed can cause skin and eye irritation in the event of prolonged exposure.
· If your car has been subjected to flood conditions (e.g. soaked carpeting/standing water on the floor of the vehicle) or if your car has become flood-damaged in any way, do not attempt to start the vehicle or put the key in the ignition before disconnecting the battery. This may cause airbag deployment which could result in personal injury. Have the car towed to an authorized Volvo retailer for repairs.

*A SIPS airbag warning decal is also located at the end of the instrument panel on the driver's side of the car.

pg. 9 Volvo Inflatable curtain (VIC)

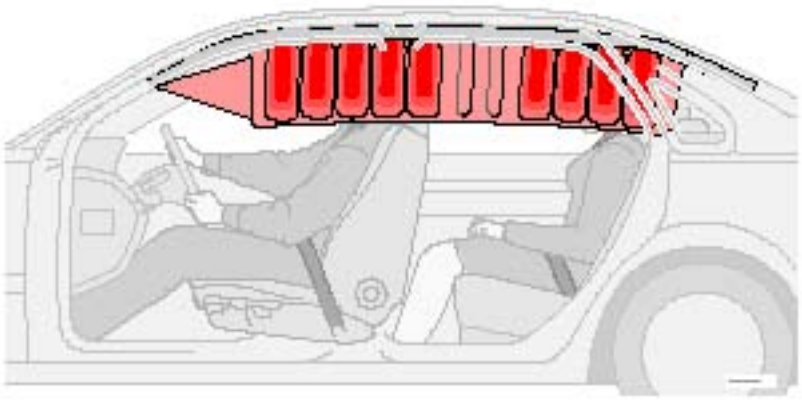

Volvo Inflatable curtain (VIC) This system consists of inflatable curtains located along the sides of the roof liners, stretching from the center of both front side windows to the rear edge of the rear side windows. It is designed to help protect the heads of the occupant of the front seat and the occupant of the outboard rear seat position in certain side impact collisions.

NOTE: IC system deployment occurs only on the side of the vehicle affected by the impact.

In certain side impacts, **BOTH** the Inflatable Curtain (IC) and the Side Impact Airbag System (SIPS-bag) will deploy, whereas, in some cases, **ONLY** the Inflatable Curtain (IC) will deploy. In cases where **BOTH** the IC and the SIPS-bag deploy, deployment will occur simultaneously.

If the inflatable curtain deploys, it remains inflated for approximately 3 seconds.

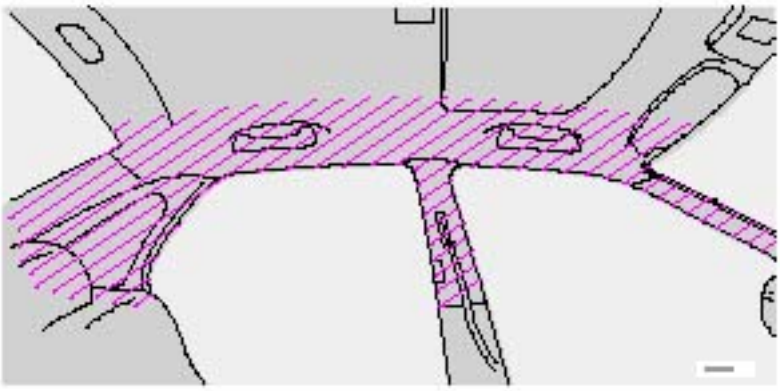

WARNING!

· The IC system is a supplement to the Side Impact Protection System. It is not designed to deploy during collisions from the front or rear of the car or in most rollover situations.
· Never try to open or repair any components of the IC system. This should only be done by an authorized Volvo service technician.
· The inflatable curtains are designed to deploy only during certain sideimpact collisions, depending on the crash severity, angle, speed and impact. The inflatable curtains are not designed to deploy in all side impact situations.
· For best protection from the IC, both front seat occupants and both outboard rear seat occupants should sit in an upright position with the seat belt properly fastened; adults using the seat belt and children using the proper child restraint system. Only adults should sit in the front seats. Children must never be allowed in the front passenger seat. See page 14 for guidelines. Failure to follow these instructions can result in injury to the vehicle occupants in an accident.

2 0 0 1
VOLVO
S80

pg. 10 Whiplash Protection System (WHIPS)

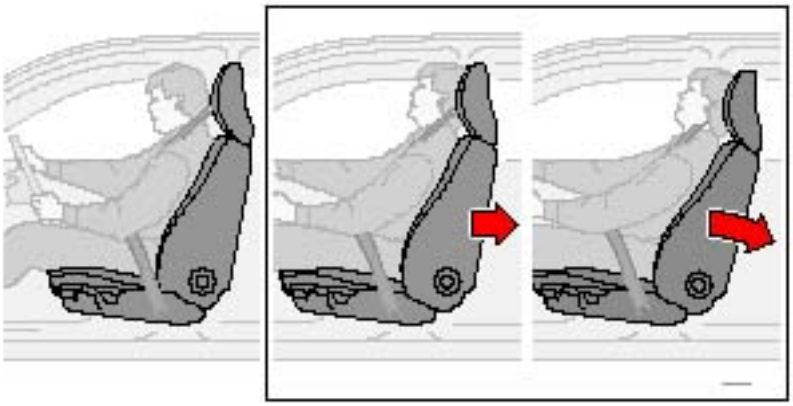

Whiplash Protection System (WHIPS) - front seats only
The WHIPS system consists of specially designed hinges and brackets on the front seat backrests and head restraints designed to help absorb some of the energy generated in a collision from the rear ("rear-ended").

In the event of a collision of this type, the hinges and brackets of the front seat backrests are designed to change position slightly to allow the backrest/head restraint to help support the occupant's head before moving slightly rearward. This movement helps absorb some of the forces that could result in the whiplash effect.

Do not wedge boxes, suitcases, etc. behind front seats

Do not wedge boxes, suitcases, etc. behind front seats

WARNING!

· Any contact between the front seat backrests and the folded rear seat could impede the function of the WHIPS system. If the rear seat is folded down, the occupied front seats must be adjusted forward so that they do not touch the folded rear seat.
· Boxes, suitcases, etc. wedged behind the front seats (see illustration above) could impede the function of the WHIPS system.
· The WHIPS system is designed to supplement the other safety systems in your car. For this system to function properly, the three-point seat belt must be worn. Please be aware that no system can prevent all possible injuries that may occur in an accident.
· If your car has been involved in a collision, the front seat backrests must be inspected by an authorized Volvo retailer even if the seats appear to be undamaged. Certain components in the WHIPS system may need to be replaced. Do not attempt to service any component in the WHIPS system yourself.
· If the rear seat backrests are folded down, cargo must be secured to prevent it from sliding forward against the front seat backrests in the event of a collision from the rear. This could interfere with the action of the WHIPS system.
· The WHIPS system is designed to function in certain collisions from the rear, depending on the crash severity, angle and speed.
· Occupants in the front seats must never sit out of position. The occupant's back must be as upright as comfort allows and be against the seat back with the seat belt properly fastened.

pg. 11 Occupant safety

Seat belt maintenance Check periodically that the seat belts are in good condition. Use water and a mild detergent for cleaning. Check seat belt mechanism function as follows: Attach the seat belt and pull rapidly on the strap.

Volvo Concern for Safety Safety is the cornerstone for Volvo. Our concern dates back to 1927 when the first Volvo rolled off the production line. Threepoint seat belts (a Volvo invention), safety cages, and energyabsorbing impact zones were designed into Volvo cars long before it was fashionable or required by government regulation. We will not compromise our commitment to safety. We continue to seek out new safety features and to refine those already in our cars. You can help. We would appreciate hearing your suggestions about improving automobile safety. We also want to know if you ever have a safety concern with your car. Call us in the U.S. at: 8004581552 or in Canada at: 8006638255.

Occupant safety How safely you drive doesn't depend on how old you are but rather on:
· How well you see.
· Your ability to concentrate.

· How quickly you make decisions under stress to avoid an accident.

The tips listed below are suggestions to help you cope with the ever changing traffic environment.
· Never drink and drive.
· If you are taking any medication, consult your physician about its potential effects on your driving abilities.
· Take a driverretraining course
· Have your eyes checked regularly
· Keep your windshield and headlights clean.
· Replace wiper blades when they start to leave streaks.
· Take into account the traffic, road, and weather conditions, particularly with regard to stopping distance.

Reporting Safety Defects in the U.S.

If you believe that your vehicle has a defect which could cause a crash or could cause injury or death, you should immediately inform the National Highway Traffic Safety Administration (NHTSA) in addition to notifying Volvo Cars of North America. If NHTSA receives similar complaints, it may open an investigation, and if it finds that a safety defect exists in a group of vehicles, it may order a recall and remedy campaign. However, NHTSA cannot become involved in individual problems between you, your retailer, or Volvo Cars of North America. To contact NHTSA, you may either call the Auto Safety Hotline tollfree at 18004249393 (or 202-3660123 in Washington, D.C. area) or write to: NHTSA, U.S. Department of Transportation, Washington D.C. 20590. You can also obtain other information about motor vehicle safety from the Hotline.

Volvo strongly recommends that if your vehicle is covered under a service campaign, safety or emission recall or similar action, it should be completed as soon as possible. Please check with your local retailer or Volvo Cars of North America, Inc. if your vehicle is covered under these conditions.

pg. 12 Child safety

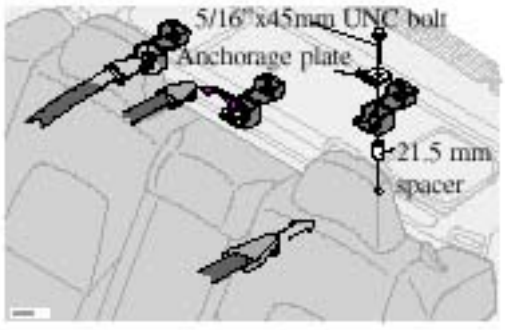

Child restraint anchorages

Volvo cars are or can be fitted with child restraint top tether anchorages in the rear seat.

There are three predrilled anchorage points in the rear window shelf.

Installing the top tether
The predrilled holes for the child restraint anchorages are underneath the rear window shelf. A slot must be cut in the fabric on the shelf to install the anchorage bracket. This installation should be carried out by an authorized Volvo retailer.

Refer to the child seat manufacturer's instructions for information on securing the child seat.

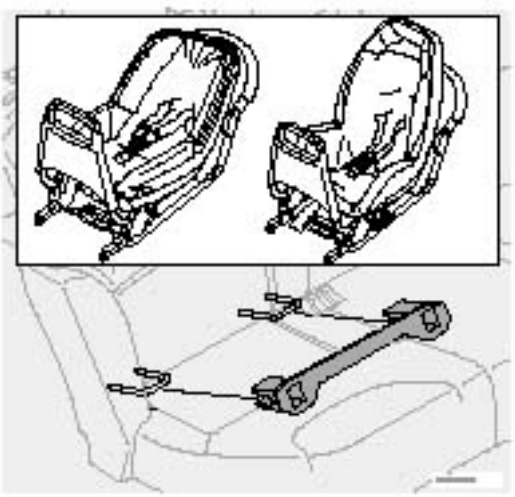

Isofix fasteners and Seat guide
The Isofix fasteners are available as a retailer-installed option in the rear seat on the outboard positions. Consult your Volvo retailer for more information on child safety accessories.

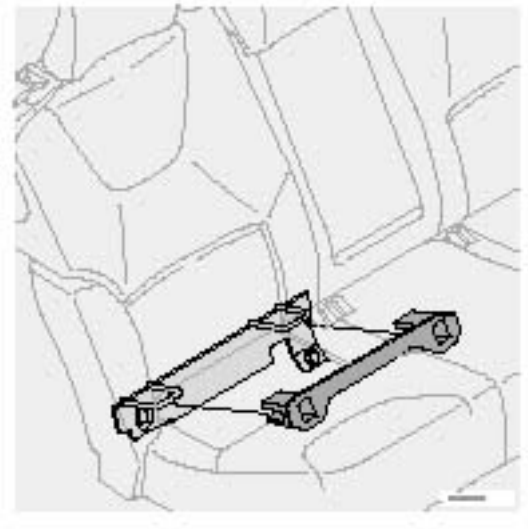

WARNING!

Child Restraint Anchorages are designed to withstand only those loads imposed by correctly fitted Child Restraints. Under no circumstances are they to be used for adult seat belts or harnesses. The anchorages are not able to withstand excessive forces on them in the event of collision if full harness seat belts or adult seat belts are installed to them. An adult who uses a belt anchored in a Child Restraint Anchorage runs a great risk of suffering severe injuries should a collision occur. Do not install rear speakers which would require the removal of the top tether anchors or interfere with the proper use of the top tether strap.

pg. 13 Child safety

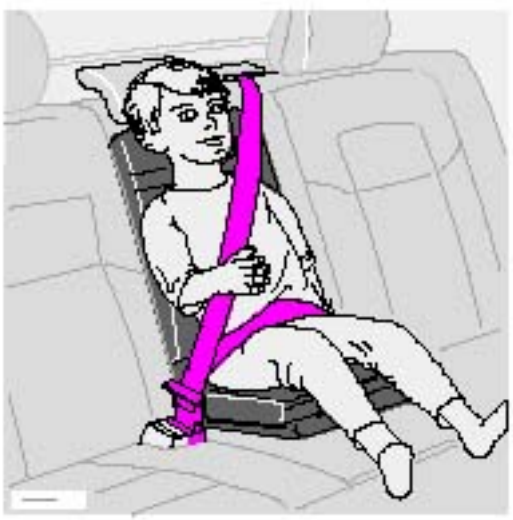

Integrated booster cushion

Integrated booster cushion

Integrated booster cushion (optional)
Volvo's own integrated booster cushion has been specially designed to help safeguard a child seated in the center position of the rear seat. When using the integrated booster cushion, the child must be secured with the vehicle's threepoint seat belt. The booster cushion is approved for children weighing between 33 and 80 lbs (15 and 36 kg) and between 38 and 54 in (97 and 137 cm) in height.

The child should be properly seated on the booster cushion (see illustration in left column). It is essential that the head restraint be adjusted properly to help support the child's head (see page 3).

The hip section of the threepoint seat belt must fit snugly across the child's hips, not across the stomach. The shoulder section of the threepoint seat belt should be positioned across the chest and shoulder (see illustration). The shoulder belt must never be placed behind the child's back or under the arm.

WARNING!

Failure to follow the instructions on this page will increase the risk of your child being injured during a sudden stop or collision. In the event of a collision while the integrated booster cushion was occupied, the entire booster cushion and center seat belt must be replaced. The booster cushion should also be replaced if it is badly worn or damaged in any way. This work should be performed by an authorized Volvo retailer only. The booster cushion should be cleaned while in place in the vehicle if possible. If not, please consult your Volvo retailer.

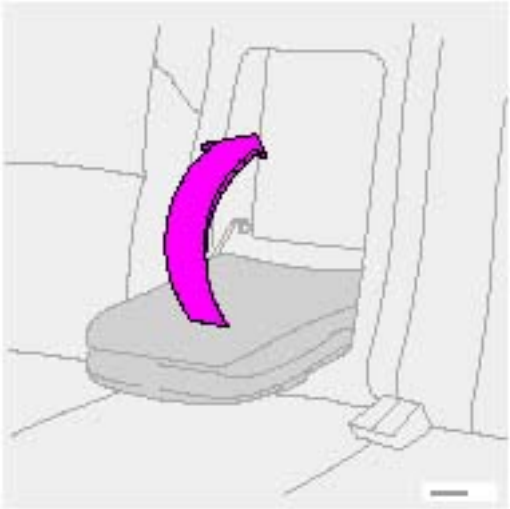

Storing the booster cushion
Fold the seat up - it will lock automatically to the backrest.

NOTE: Please also refer to the instructions on the integrated booster cushion.

pg. 14 Child safety

Keeping child seats in place (ALR/ELR*)

To make child seat installation easier, each seat belt (except for the driver's belt) is equipped with a locking mechanism to help keep the seat belt taut.

When attaching the seat belt to a child seat: · Attach the seat belt to the child seat according to the child seat manufacturer's instructions.
· Pull the seat belt out as far as possible.
· Insert the seat belt latch plate into the buckle (lock) in the usual way.
· Release the seat belt and pull it taut around the child seat.
A sound from the seat belt retractor will be audible at this time and is normal.

The belt will now be locked in place.

This function is automatically disabled when the seat belt is unlocked and the belt is fully retracted.

WARNING!

Do not use child safety seats or child booster cushions/backrests in the front passenger's seat. We also recommend that children who have outgrown these devices sit in the rear seat with the seat belt properly fastened.

Important!

Why Volvo believes no child should sit in the front seat of a car.

It's quite simple really. A front air bag is a very powerful device designed, by law, to help protect an adult. Because of the size of the air bag and its speed of inflation, a child should never be placed in the front seat, even if he or she is properly belted or strapped into a child safety seat. Volvo has been an innovator in safety for over fifty years, and we'll continue to do our part. But we need your help. Please remember to put your children in the back seat, and buckle them up.

Volvo has some very specific recommendations:
· Always wear your seat belt.
· Air bags are a SUPPLEMENTAL safety device which, when used with a three-point seat belt can help

reduce serious injuries during certain types of accidents. Volvo recommends that you do not disconnect the air bag system in your vehicle.
· Volvo strongly recommends that ALL children sit in the rear seat of any vehicle and that they be properly restrained.
· A child should NEVER sit in the front passenger seat of any vehicle equipped with a front passenger side airbag.
· Volvo recommends that ALL occupants (adults and children) shorter than four feet seven inches (140 cm) be seated in the back seat of any vehicle with a front passenger side airbag.

Drive safely!

* Automatic Locking Retractor/Emergency Locking Retractor

pg. 15 Child safety

Child safety

Volvo recommends the proper use of restraint systems for all occupants including children. Remember that, regardless of age and size, a child should always be properly restrained in a car.

Restraint systems for children are designed to be secured in the vehicle by lap belts or the lap portion of a lapshoulder belt. Such child restraint systems can help protect children in cars in the event of an accident only if they are used properly. However, children could be endangered in a crash if the child restraints are not properly secured in the vehicle. Failure to follow the installation instructions for your child restraint can result in your child striking the vehicle's interior in a sudden stop.

Holding a child in your arms is NOT a suitable substitute for a child restraint system. In an accident, a child held in a person's arms can be crushed between the vehicle's interior and an unrestrained person. The child could also be injured by striking the interior, or by being ejected from the vehicle during a sudden maneuver or impact. The same can also happen if the infant or child rides unrestrained on the seat. Other occupants should also be properly restrained to help reduce the chance of injuring or increasing the injury of a child.

All states and provinces have legislation governing how and where children should be carried in a car. Find out the regulations existing in your state or province. Recent accident statistics have shown that children are safer in rear seating positions than front seating positions when properly restrained. A child restraint system can help protect a child in a vehicle. Here's what to look for when selecting a child restraint system:
· It should have a label certifying that it meets applicable Federal Motor Vehicle Safety Standards (FMVSS 213) or in Canada, CMVSS 213.
· Make sure the child restraint system is approved for the child's height, weight and development the

label required by the standard or regulation, or instructions for infant restraints, typically provide this information.

· **In using any child restraint system, we urge you to look carefully over the instructions that are provided with the restraint. Be sure you understand them and can use the device properly and safely in this vehicle. A misused child restraint system can result in increased injuries for both the infant or child and other occupants in the vehicle.**
· If your child restraint requires a top tether strap, consult your authorized Volvo retailer for top tether anchorage and installation information.

When a child has outgrown the child safety seat, you should use the rear seat with the standard seat belt fastened. The best way to help protect the child here is to place the child on a cushion so that the seat belt is properly
located on the hips (see page 2).

A specially designed and tested booster cushion (not available in Canada) for children between the age of 3 and approximately 10 years, weighing 33 - 80 lbs (15 - 36 kg) and 46 - 54" (117 - 137 cm) in height, can be obtained from your Volvo retailer.

WARNING!

Do not use child safety seats or child booster cushions/backrests in the front passenger's seat. We also recommend that children under 4 feet 7 inches (140 cm) in height who have outgrown these devices sit in the rear seat with the seat belt fastened.

WARNING!

Keep vehicle doors and trunk locked and keep keys out of a child's reach. Unsupervised children could lock themselves in an open trunk and risk injury. Children should be taught not to play in vehicles.

WARNING!

On hot days, the temperature in the trunk or vehicle interior can rise very quickly. Exposure of people to these high tempera-tures for even a short period of time can cause heat-related injury or death. Small children are particularly at risk.

pg. 16 Brake system

BRAKE

Brake circuit malfunction

If one of the brake circuits should malfunction, the red warning light will come on, the pedal stroke increases slightly, the pedal feels softer and extra pressure is required for normal braking. If the light comes on while driving or braking, stop immediately and check the brake fluid level in the reservoir.

WARNING!

If the fluid level is below the MIN mark in the reservoir: DO NOT DRIVE. Tow the car to a Volvo retailer and have the brake system checked and any leakage repaired.

NOTE: When the car is at a standstill and the engine is idling, e.g. at a traffic light and the brake pedal is depressed, the pedal may go down slightly. This is a normal function of the power-assisted brake system.

If the brake powerassist does not function

The power assist to the brakes functions only when the engine is running. When the car is moving without the engine running, the brake pedal pressure required to stop the car is increased by 34 times and the brake pedal feels stiff.

Moisture on brake discs and brake pads affects braking

Driving in rain and slush or passing through an automatic car wash can cause water to collect on the brake discs and pads. This will cause a delay in braking effect when the pedal is depressed. To avoid such a delay when the brakes are needed, depress the pedal occasionally when driving through rain, slush etc. This will remove the water from the brakes. Check that brake application feels normal. This should also be done after washing or starting in very damp or cold weather.

Severe strain on the brake system

The brakes will be subject to severe strain when driving in mountains or hilly areas or towing. The speed is usually low which means that the cooling of the brakes is less efficient than when driving on level roads. To reduce the strain on the brakes, it is advisable not to use the brakes excessively. Instead, shift into a lower gear and let the engine help with the braking. Do not forget that, if you are towing a trailer,

the brakes will be subjected to greater load than is normal.

pg. 17 ANTI-lock Brake System (ABS)

ANTI-lock Brake System (ABS) If the warning lamp lights up there is a malfunction of the ABS system (the standard braking system will however function) and the vehicle should be driven cautiously to a Volvo retailer for inspection. The ANTI-lock Braking System (ABS) helps to improve vehicle control (stopping and steering) during severe braking conditions by limiting brake lockup. When the system "senses" impending lockup, braking pressure is automatically modulated in order to help prevent lockup, which could lead to a skid.

The system performs a self-diagnostic test when the engine is started and when the vehicle first reaches a speed of approximately 12 mph (20 km/h). The brake pedal will pulsate several times and a sound may be audible from the ABS control module. This is normal.

To obtain optimal effect from the ABS system, constant pressure should be kept on the brake, keep constant pressure on the brake pedal. Do not pump the brake pedal.

The switching of the ABS modulator will be audible and the brake pedal will pulsate at this time. Please be aware that ABS does not increase the absolute braking potential of the vehicle. While control will be enhanced, ABS will not shorten stopping distances on slippery surfaces.

ABS with EBD (Electronic Brake Force Distribution)

EBD is an integrated part of the ABS system. EBD regulates the hydraulic pressure to the rear brakes to help provide optimal braking capacity.

If the BRAKE and ABS warning lights come on at the same time, this could indicate a fault in the brake system.

· Stop the car in a suitable place and switch off the engine.
· Restart the engine.
· If both warning lights go off, no further action is required.
· If both lights are still on after the engine has been restarted, switch off the engine again and check the brake fluid level (see page 116 for the location of the brake fluid reservoir).

WARNING!

If the fluid level is below the MIN mark in the reservoir, DO NOT DRIVE. Have the car towed to an authorized Volvo retailer and have the brake system inspected.

· If the brake fluid level is above the MIN mark, drive carefully to an authorized Volvo retailer and have the brake system inspected.

pg. 18 (Dynamic) Stability Traction Control (STC) (DSTC) - option

Stability Traction Control (STC)

The STC system is designed to help reduce wheel spin by limiting power to the drive wheels if they begin to lose traction. At speeds over 25 mph (40 km/h), the STC system monitors and compares all four wheels. If one of the drive (front) wheels shows any tendency to slip, such as when driving on slippery roads, the difference in speed is immediately detected. This triggers a signal to the engine management system, which will reduce engine torque (by reducing fuel) until the differential is corrected. This torque reduction is handled in stages, and reaction time is extremely fast. The system can be switched on or off by pressing the button on the center console for at least half a second (see page 27). The indicator light ( ) in the instrument panel will be ON when you have switched the system off. The STC system comes on each time you start your car.

The STC indicator light ( ) will come on for approximately **2 seconds** when the engine is started as the system performs a self-diagnostic test.

This system should be switched off if you, for any reason, temporarily have to drive with tires of different dimensions (e.g., spare tire).

The symbol will flash when STC is actively regulating power to the drive wheels. Normal power may be reduced at this time. This is normal as power is momentarily reduced to help keep the drive wheels from losing traction and spinning.

If the STC system has been switched on using the button in the center console (the indicator light will normally go off) and the indicator light *remains on*, there is a fault in the system. In this case:
· Stop the car in a suitable place and switch off the engine.
· Restart the engine.
· If the indicator light goes off, no further action is required.

· If the light remains on, have the STC system inspected by an authorized Volvo retailer.

Dynamic Stability Traction Control (DSTC)

The DSTC system performs all of the functions of the STC system. In addition, DSTC also applies the brakes to one or more of the wheels to help maintain stability if a wheel begins to lose traction. The system functions at speeds above 12 mph (20 km/h) and works on all four wheels, on any road surface. When DSTC is active, brake pressure is regulated automatically and the brake pedal will move slightly. If you press the brake pedal while DSTC is automatically regulating brake pressure, it will feel stiffer than normal. A pulsating sound will be audible at this time, which is quite normal.

Switching off DSTC

DSTC comes on each time you start your car, and should be left on at all times. If for any reason the steering wheel position or the front wheels are not properly aligned, DSTC should be switched off since the system may receive incorrect signals.

When the LED in the button is on, this indicates that DSTC is switched on (the light will also come on if a fault has been detected in the system). To avoid inadvertently switching the system off, the button must be pressed for at least one second before DSTC is deactivated.

The symbol will come on to indicate that DSTC has been switched off. The system is automatically switched on when the engine is restarted.

The DSTC indicator light ( ) will flash when:

DSTC is actively functioning to help avoid loss of traction.

The DSTC indicator light ( ) will stay on when:

The car is started (for approximately 2 seconds as DSTC performs a self-diagnostic test).

DSTC has been switched off by pressing the DSTC button in the middle console.

DSTC has been temporarily switched off due to high brake temperature. The system will automatically switch on again when the brakes have cooled.

If the system has been switched off due to a fault. An authorized Volvo retailer should check the system.

Contents | Top of Page

2 0 0 1
VOLVO
S80

Chapter 2 - Instruments, switches and controls

pg. 19 Instruments, switches and controls

Interior 20

Exterior 21

Instruments 22

Instrument panel 23

Indicator and warning lights 24

Indicator and warning lights 24

Text information window 26

Switches in center console 27

Trip computer 28

Cruise control 29

Headlights, parking lights, fog lights, instrument illumination 30

Turn signals, windshield wipers/washers 31

Steering wheel adjustment/lock, ignition switch 32

Warning flashers, heated mirrors/rear window/front seats 33

Parking brake, auxiliary socket 34

Electrically operated windows 35

Rearview/sideview/vanity mirrors 36

Sun roof 37

Sun blinds 38

pg. 20 Interior

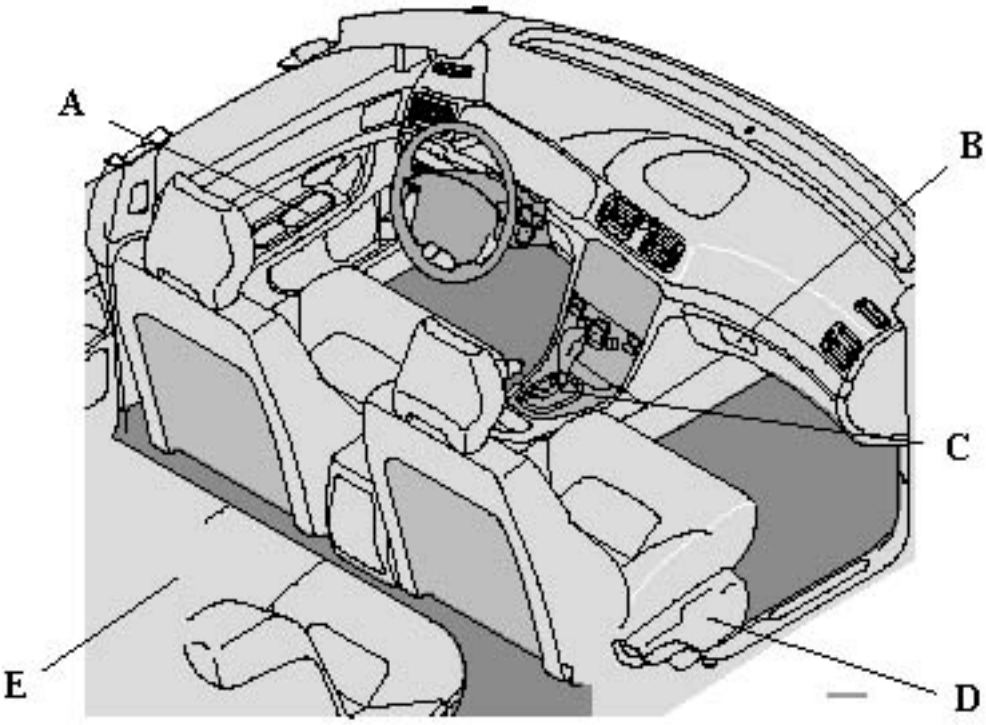

A

Locking and unlocking the car	56/59
Alarm	60
Power windows	35
Sideview mirror controls	36

B

Glove compartment	56

C

Automatic transmission	67
Geartronic	69
Parking brake	34

Center console switches 27

D

Power seat adjustment 48

Heated seats (option) 33

Cleaning upholstery 105

E

Folding rear seat 54

Panel for long loads 54

Folding down head restraint 27

Adjusting head restraint 3

Child safety locks 62

Integrated booster cushion 13

pg. 21 Exterior

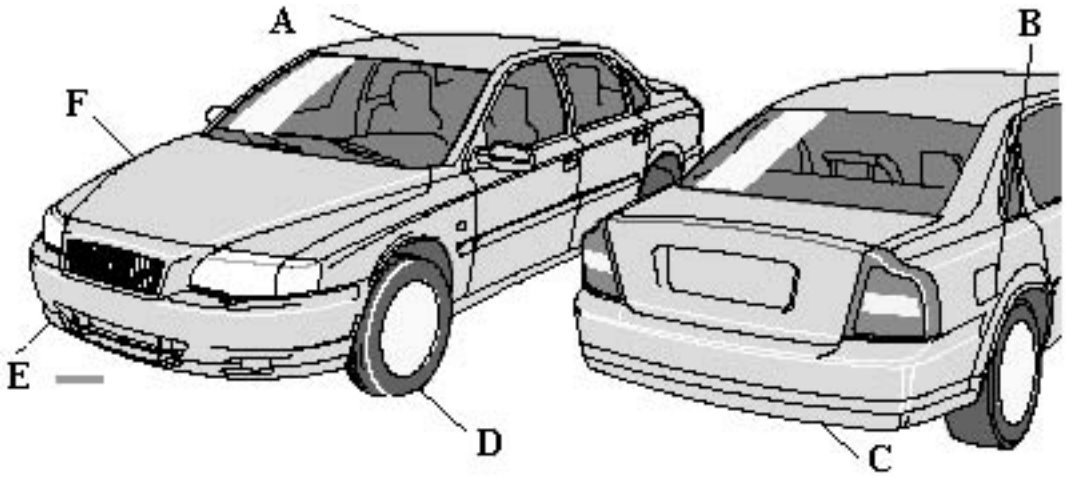

A

Sun roof (option) 37

B

Fuel tank cover 65

Refuelling 65

Economical driving 71

C

Replacing a back-up light 98

Replacing a brake light 98
Replacing a tail light 98
Replacing a direction indicator 98
Replacing a fog light 98
Replacing license plate lights 100

D

Tires 84
Wheels 84
Brake system 16
Spare wheel 86
Changing wheels 88

E

Replacing a high beam 96
Replacing a low beam 96
Replacing a parking light 97
Replacing a direction indicator 97
Replacing a fog light 99
Replacing a headlight wiper 119

F

Washing the car 104
Paint touch-up 103

pg. 22 Instruments

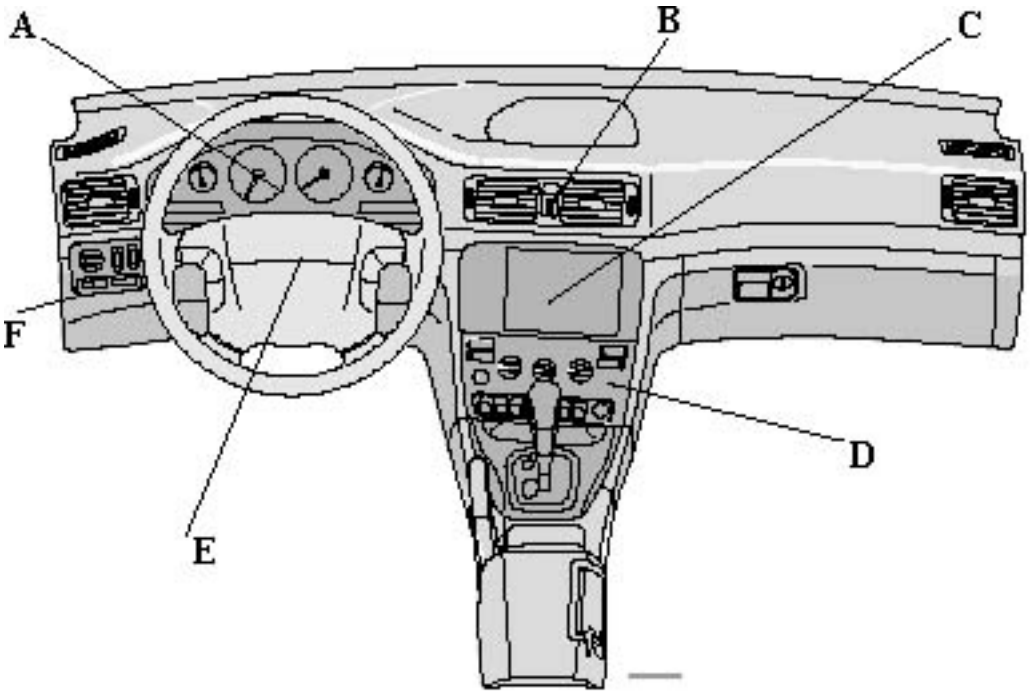

A

Temperature gauge	23
Speedometer	23
Odometer	23
Trip odometer	23
Warning lights	24
Text window	26
Tachometer	23
Clock	23
Ambient temperature sensor	23
Fuel gauge	23

B

Hazard warning flashers	33

C

Audio system	125

D

Electronic climate control	41
Heated seats (option)	33
Heated rear window/rearview mirrors	33

E

Steering wheel adjustment	32
Airbag	4
Cruise control	29
Windshield wipers/washer	31
Turn signal lever	31
Trip computer	28
Audio system controls	133

F

High/low beam headlights	30
Parking lights	30
Fog lights	30
Instrument panel lighting	30

pg. 23 Instrument panel

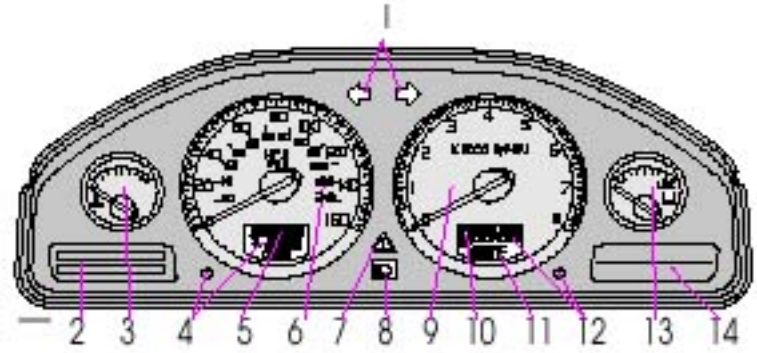

1 Turn signals

2 Text window

3 Temperature gauge

The pointer should be approximately midway on the gauge when driving.

Do not drive the car if the warning light is on. The text window will provide you with additional information.

If the engine temperature remains high, check coolant level - see page 110.

4 Trip odometer/reset button

The trip odometer is used for measuring shorter distances. The last digit indicates 1/10 mile/kilometer. Press the button quickly to toggle between trip odometers 1 and 2. Hold in the button for more than 2 seconds to reset.

5 Odometer

6 Speedometer

7 General warning light (see page 24).

8 High beam indicator light

9 Tachometer

Indicates engine speed in thousands of rpm. Do not drive for long with the needle in the red section. The engine has an built-in function preventing too high an engine speed. When this function operates, you may discern some pulsation, which in that case is quite normal.

10 Gear and driving mode indicator

The currently selected driving mode is displayed here. If you use the geartronic function on the automatic transmission, the currently selected gear will be displayed.

11 Ambient temperature indicator

This sensor indicates the air temperature outside your car. A "snowflake" symbol in the text window is displayed when the temperature is in the range of 23 - 36° F (-5 - +2° C).

Please note that this symbol does not indicate a fault with your car.

At low speeds or when the car is not moving, the temperature readings may be slightly higher than the actual ambient temperature.

12 Clock/reset button

Turn the button to adjust the clock.

13 Fuel gauge

The fuel tank holds approximately 21.1 US gal. (80 liters).

When the warning light comes on there is approximately 1.8 US gal. (8 liters) of fuel remaining.

14 Indicator and warning lights

pg. 24 Indicator and warning lights

The indicator and warning lights described on pages 24 and 25 should never stay on when driving

When the ignition key is turned, all of the warning lights in the lower right-hand side of the instrument panel should go on to test the function of the bulbs. If a light does not go off after the engine has started, the
system indicated should be inspected.

NOTE: The parking brake reminder light will not go off until the parking brake has been fully released.

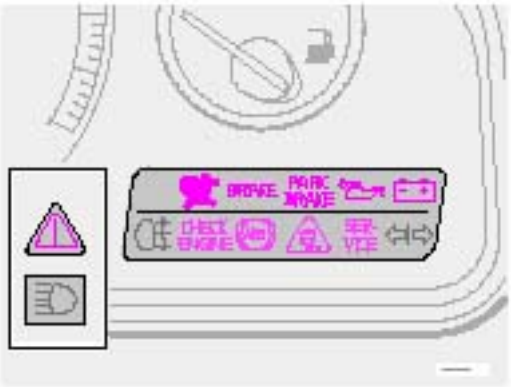

Warning lamp ⚠ **in the center of the instrument panel** This lamp lights up **red** or **orange** depending on the severity of the fault that has been detected.

Orange light: Follow the instructions shown in the text window.

Red light: Stop the car as soon as possible in a suitable location and read the message shown in the text window.

Supplemental Restraint System (SRS)

If the light comes on (or stays on after the vehicle has started), the SRS diagnostic system has detected a fault. Drive to an authorized Volvo retailer for an inspection of the system. See the SRS section for more information.

BRAKE

Brake failure warning light

If the light comes on while driving or braking, stop immediately, open the hood and check the brake fluid level in the reservoir. See page 113 for reservoir position and page 116 for instructions.

Canadian models are equipped with this warning light:

Park
Brake

Parking brake reminder light

This light will be on when the parking brake (hand brake) is applied. The parking brake lever is situated between the front seats.

Canadian models are equipped with this warning light:

Oil pressure warning light

If the light comes on while driving, stop the car and then stop the engine immediately and check the engine oil level. See page 114. If the light stays on after restart, have the car towed to the nearest authorized Volvo retailer. After hard driving, the light may come on occasionally when the engine is idling. This is normal, provided it goes off when the engine speed is increased.

Generator warning light

If the light comes on while the engine is running, have the charging system checked.

pg. 25 Indicator and warning lights

Rear fog light

This light indicates that the rear fog light is on.

CHECK ENGINE

Malfunction indicator lamp

If the light comes on (or stays on after the vehicle has started), the engine diagnostic system has detected a possible fault in the emission control system. Although driveability may not be affected, see an authorized Volvo retailer as soon as possible for inspection. Canadian models are equipped with this warning light:

NOTE: If the fuel filler cap is not closed tightly or if the engine is running when the car is refueled, the Malfunction Indicator Lamp may indicate a fault. However, your vehicle's performance will not be affected. Use only Volvo original or approved fuel filler caps.

Anti-lock Brake System ABS

If the warning light comes on, there is a malfunction of the ABS system (the standard braking system pwill however function). The vehicle should be driven to a Volvo retailer for inspection. See page 17 for additional information.

Stability Traction Control (STC) system (option)

Dynamic Stability and Traction Control (DSTC) system (option)

An LED in the STC or DSTC switch in the center console will light up to indicate that the system is activated. See page 18 for further information.

Service reminder indicator

This light will come on at 7,500 mile (12,000 km) intervals, after 750 hours of driving or after 12 months, whichever occurs first, to remind the driver that the service interval has been exceeded. The light will stay on for 2 minutes after start until reset by the servicing retailer.

Turn signal indicator - trailer (certain models)

If you are towing a trailer, this light will flash simultaneously with the turn signals on the trailer. If the light does not flash when signaling, neither the trailer's turn signals nor the car's turn signals are functioning.

Contents | Top of Page

2 0 0 1
VOLVO
S80

pg. 26 Text information window

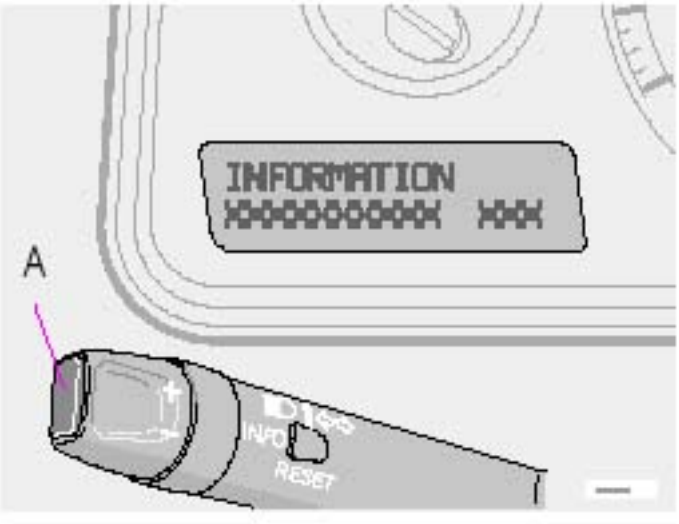

Messages in the text window

When a warning light in the instrument panel comes on, a message is also displayed in the text window. After you have read the message, you can erase it by pressing button A (see illustration above).

NOTE: Certain messages cannot be erased until the condition has been corrected.

Erased messages are stored in the system's memory until the required action has been taken. You can scroll through the stored messages by pressing button A. The text window can be cleared (the message will be returned to memory) by pressing button A again.

General messages	
SLOW DOWN:	Reduce speed to help prevent damage.
DRIVE SLOWLY:	Drive the car carefully to an authorized Volvo retailer for inspection.
STOP SAFELY ASAP:	Stop and switch off the engine - to help prevent serious risk of damage.

SERVICE URGENT:	Take your car to an authorized Volvo retailer for inspection as soon as possible.
SERVICE REQUIRED:	Take your car to an authorized Volvo retailer for inspection at your convenience (but preferably before the next scheduled maintenance service).
FIX NEXT SERVICE:	Have the system affected inspected at the next scheduled maintenance service.
SEE MANUAL:	Refer to your owner's manual. For additional information, please contact your Volvo retailer.

pg. 27 Switches in the center console

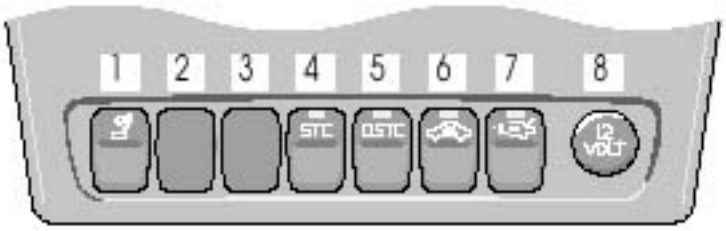

The positions of these buttons may vary, depending on the specifications of your car

The positions of these buttons may vary, depending on the specifications of your car

1. Folding head restraints
This button is used to fold down the *outboard* rear head restraints. The ignition key must be in position I or II or the engine must be running.

NOTE: If the head restraints have been folded down, they must be returned to their original position *manually*.

The head restraints should be in the upright position before the rear seat backrests are folded down.

WARNING!

For safety reasons, no one should be allowed to sit in the outboard rear seat positions if the head restraints are folded down. If these positions are occupied, the head restraints should be in the upright (fixed) position.

2. Not in use

3. Not in use

4. Stability Traction Control (STC) - option

Press this switch for at least 2 seconds to turn the STC system on or off. An LED in the switch will light up to indicate that the system is on. See page 18 for more information on STC. This system should be switched off if you, for any reason, temporarily have to drive with tires of different dimensions (e.g., spare tire).

NOTE: To help reduce the risk that this system is turned off inadvertently, the switch must be held in for at least 2 seconds to turn STC off. The warning symbol in the instrument panel will light up to indicate that STC is OFF.

5. Dynamic Stability Traction Control (DSTC) - option
This button is used to switch DSTC off. When the LED in the button is ON, this indicates that the system is ON (the light will also come on if a fault has been detected in the system).

NOTE: To avoid inadvertently switching the system off, the button must be pressed for at least one second before DSTC is deactivated. The warning symbol will come on to indicate that DSTC has been switched off. The system is automatically switched on when the engine is started. **DSTC should be switched off if the steering wheel position or the front wheels are not properly aligned.**

WARNING!
Please be aware that the car's handling characteristics may be affected if Dynamic Stability Traction Control (DSTC) is switched off.

6. Temporarily disconnecting the alarm sensor(s) - option
For more details see page 61.

7. Trunk lock
Pressing this switch locks the trunk, even if the doors are unlocked. The trunk will remain locked even if the doors are locked/unlocked using the central locking system.

Please see page 59 for more information on this function.

8. Auxiliary socket
This 12 volt socket can be used to plug in certain accessories such as cellular telephones, etc. The ignition key must be in position 1 (or higher) for the auxiliary socket to function.

NOTE: The auxiliary sockets can also be used for cigarette lighters, which are available at your Volvo retailer.

pg. 28 Trip computer

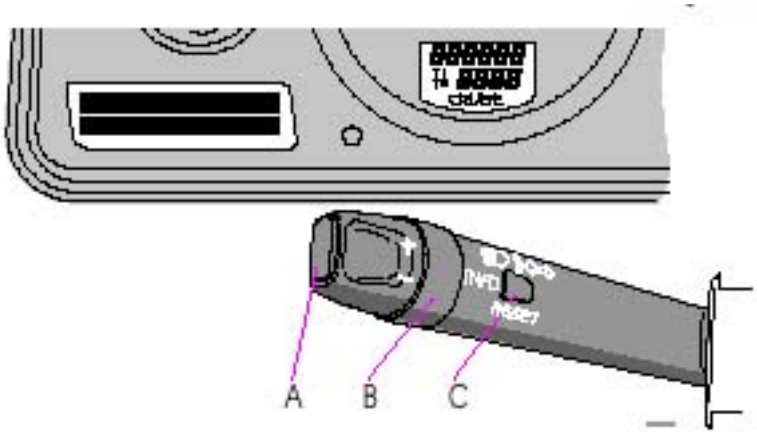

Trip computer
The trip computer stores information gathered from several systems in your car and has five menus that can be displayed in the text window.
· Driving distance on current fuel reserve
· Average fuel consumption
· Current fuel consumption
· Average speed
· Remaining fuel

NOTE: Warning messages from the car's monitoring systems will override the trip computer function. If a warning message is displayed in the text window while you are using the trip computer, you must acknowledge the message by pressing button A. Press button A again to return to the trip computer function.

Trip computer controls
The four trip computer functions can be accessed by twisting control B one step at a time in either direction. Twisting a fifth time returns you to the original function.

The trip computer can be reset (current data will be erased from system memory) by pressing RESET (button C).

Trip computer functions

Driving distance on current fuel reserve
This function shows the approximate distance that can be driven on the fuel remaining in the tank. This calculation is based on average fuel consumption during the last 12 miles (20 km) of driving and the amount of fuel remaining in the tank when the reading was taken.

When the driving distance on current fuel reserve is less than 12 miles (20 km), "----" will be displayed

in the text window.

Average fuel consumption
This value indicates fuel consumption since the last time the trip computer was reset (by pressing RESET, button C). When the engine is switched off, information on fuel consumption is stored and remains in system memory until the RESET (button C) is pressed again.

Current fuel consumption
This value indicates the current fuel consumption, based on readings taken once per second. When the car is not moving, "----" will be displayed.

Average speed
This value indicates average speed since the last time the trip computer was reset (by pressing RESET, button C). When the engine is switched off, information on average speed is stored and remains in system memory until the RESET (button C) is pressed again.

Remaining fuel
The value indicates the amount of remaining fuel.

pg. 29 Cruise control

Cruise control
The cruise control panel is located on the left side of the steering wheel hub.

Engaging cruise control/setting speed
· Press the CRUISE button
· Increase or decrease speed as desired
· Press + or - to set the current speed

NOTE: Cruise control will not function at speeds below 22 mph (35 km/h).

Braking
Cruise control is automatically disengaged when the brake pedal is depressed. The currently set speed is stored in memory. Quickly pressing resume (⟲) will return the car to the previously set speed.

Acceleration
Momentary acceleration, such as when passing another car, does not affect cruise control operation. The car will automatically return to the previously set speed when you release the accelerator pedal.

When the cruise control is already engaged, the car's speed can be increased or decreased by holding

down + or - until the car reaches the desired speed. One short press on either symbol corresponds to a speed change of approximately 1 mph (1.6 km/h).

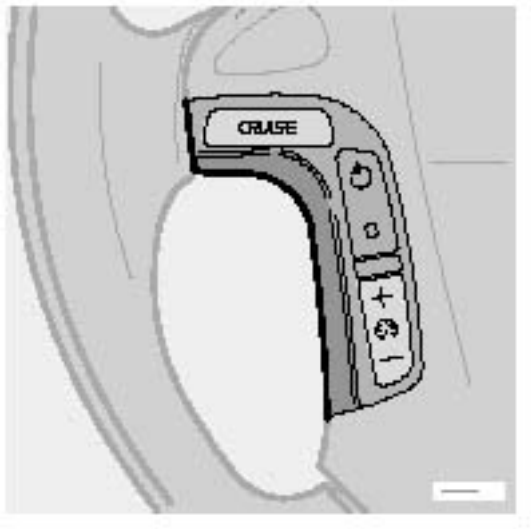

Disengaging cruise control
Cruise control can be disengaged by:
· Pressing the CRUISE button.
· Putting the gear selector in (N)eutral.

NOTE: Cruise control is automatically disengaged if the engine is switched off, if the gear selector is placed in (N)eutral, if the car's speed drops to under 70% of the currently set speed or if the wheels start to spin.

Temporarily disengaging cruise control
· Press 0 to temporarily disengage cruise control. Press "resume" (⟲) to return to the previously set speed.
· Press the brake pedal. Press "resume" (⟲) to return to the previously set speed.

WARNING!

Cruise control should not be used in heavy traffic or when driving on wet or slippery roads. Cruise control may not maintain set speed on steep downgrades.

pg. 30 Headlights, Parking lights, Fog lights, Instrument illumination

A - Headlights, parking lights

O All lights off

Models with daytime running lights: Low beam headlights will automatically come on if the ignition key is in position II. Front and rear parking lights and license plate lights will also be on.

Volvo recommends the use of daytime running lights. If, however, you would prefer to have these lights turned off (USA only), please consult your Volvo retailer. Please note that the use of daytime running lights is mandatory in Canada.

Parking lights on

Headlights, parking lights, license plate lights and instrument panel illumination are on if the ignition key is in position II.

If the headlight switch is in position all lights will go out when the ignition is switched off. The headlight switch must be in this position before the high beams will function.

Switch from high to low beams and vice versa by moving the turn signal switch lever on the left side of steering column towards the steering wheel.

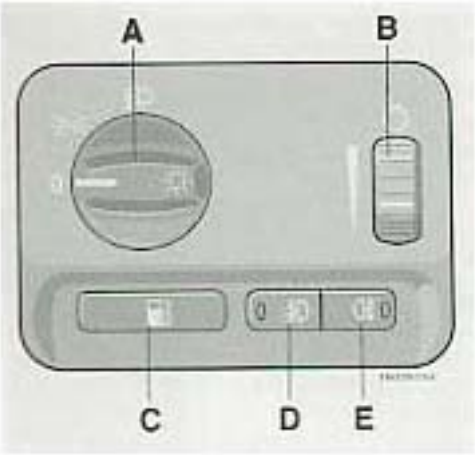

B - Instrument illumination
Move the thumbwheel up to increase brightness or down to decrease brightness. There is also an instrument panel illumination sensor (see illustration on page 41) which automatically adjusts the level of illumination.

C - Front fog lights (option)
The front fog lights will only function in combination with the low beam headlights.

An LED in the switch indicates when the front fog lights are on.

D - Rear fog light
The rear fog light is considerably brighter than the normal tail lights and should be used only when conditions such as fog, rain, snow, smoke or dust reduce visibility for other vehicles to less than 500 ft (150 meters).

An LED in the switch indicates when the rear fog light is on. The rear fog light will only function in combination with the high/low beam headlights.

By design, there is one rear fog light only, located in the driver's side tail light cluster.

Rear light in the instrument panel
This light indicates that the rear fog light is on.

pg. 31 Turn signals, Windshield wipers/washers

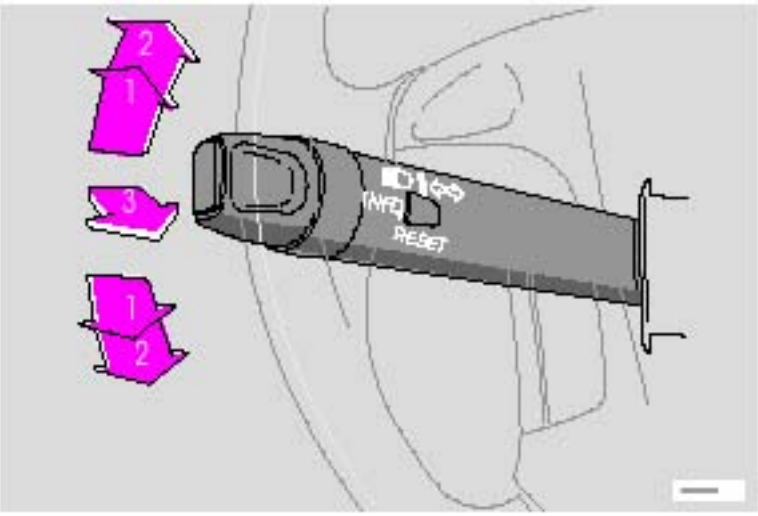

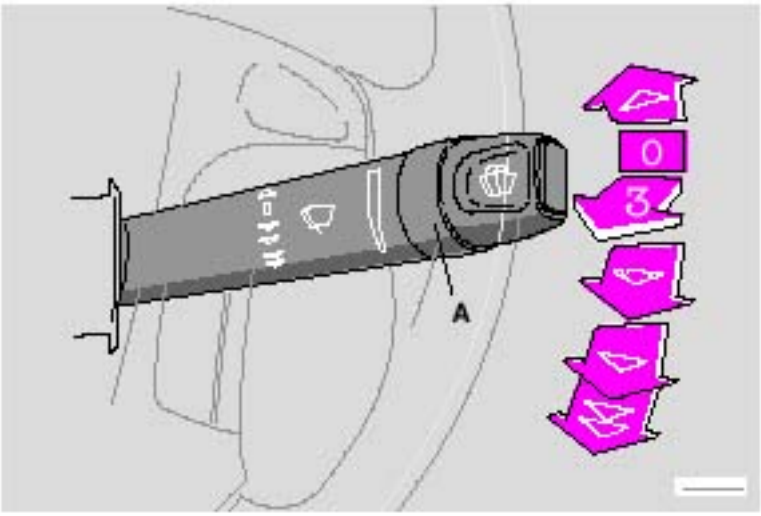

Turn signals
1 Lane change position. In maneuvers such as lane changing, the driver can flash the turn signals by moving the turn signal lever to the first stop and holding it there. The lever will return to the neutral position when released.

2 Signal lever engaged for normal turns.

3 High beam/low beam switch (headlights on).
Move the lever towards the steering wheel and release it.

Headlight flasher (headlights off).

Move the lever towards the steering wheel. The headlight high beam will be on until the lever is

released.

NOTE: If the turn signal indicator flashes faster than normal, check for a burned-out turn signal bulb.

Windshield wipers/washers
0 Windshield wipers off

Intermittent wiper function. With the lever in this position, you can set the wiper interval by twisting control A toward + to increase wiper speed or - to decrease the speed.

Normal wiper speed

High wiper speed

3 Windshield wiper/washer, headlight wiper/washer (certain models). The wipers will make 23 sweeps across the windshield and headlights (certain models) after the lever is released.

"Single sweep" position: Move the lever slightly upward from the 0 position for one sweep of the wipers. The lever returns automatically to 0 when released.

pg. 32 Steering wheel adjustment, Ignition switch/steering wheel lock

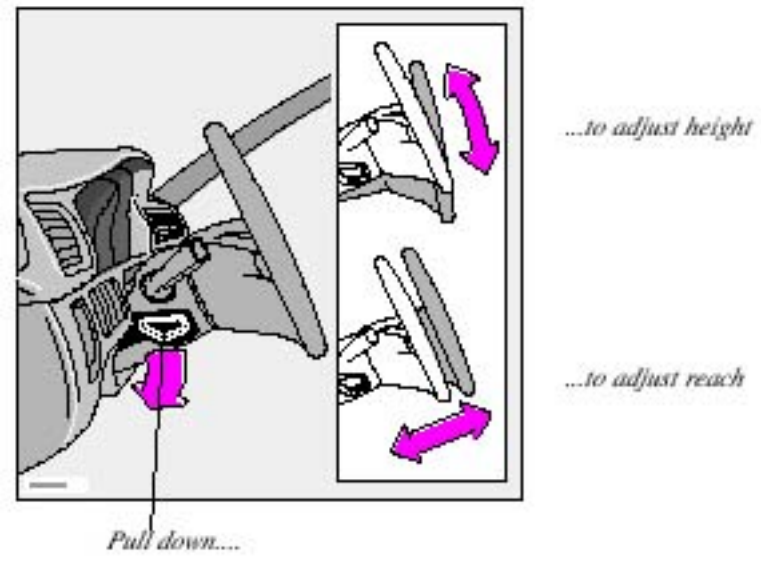

Steering wheel adjustment

Both the height and the reach of the steering wheel can be adjusted to a comfortable position for the driver. Pull down the lever on the left of the steering column. Adjust the steering wheel to a suitable

position and press the lever back into place to lock the steering wheel in the new position. Check that the steering wheel is locked in the new position.

WARNING!
Never adjust the steering wheel while driving.

Ignition switch

O **Locked position:** Remove the key to lock the steering wheel*

WARNING! Never turn the key to position O while driving or when the car is being towed.

I **Intermediate position:** Certain accessories, radio, etc. on, daytime running lights off.

II **Drive position:** Key position when engine is running.

III **Starting position:** Release the key when the engine starts. The key returns automatically to the Drive position.

A chime will sound if the starting key is left in the ignition lock and the front door on the driver's side is opened.

* The gear selector must be in the (P)ark position.

Steering wheel lock

The steering wheel lock might be under tension when the car is parked.

Turn the steering wheel slightly to free the ignition key.

In order to reduce car theft, make sure the steering wheel lock is engaged before leaving the car.

Contents | Top of Page

2 0 0 1
VOLVO
S80

pg. 33 Warning flashers, Heated mirrors/rear window, Heated front seats

Hazard warning flashers

The four-way flasher should be used to indicate that the vehicle has become a traffic hazard. To activate the flashers, press the triangular button in the center dash. Press the button again to turn off the flashers. **NOTE:** Regulations regarding the use of the hazard warning flasher may vary, depending on where you live.

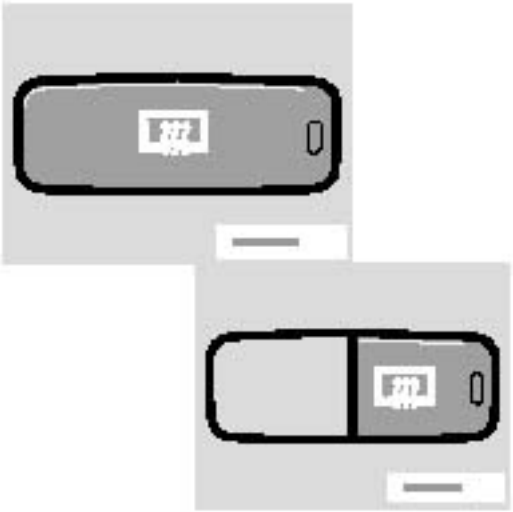

Heated sideview mirrors/rear window

Press the switch to start heating the rear window and sideview mirrors to remove ice or condensation. An LED in the switch will light up.

A timer automatically switches off the heating to the sideview mirrors after approximately 6 minutes and to the rear window after approximately 12 minutes. The LED will go out correspondingly.

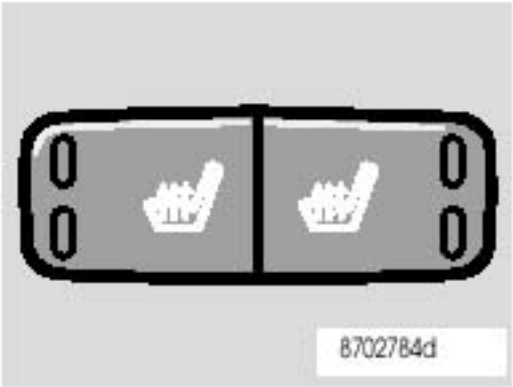

Heated front seats (option)

The front seat heating can be switched on and off as required. · Press the switch once for full heating effect (both LED's in the switch will light up).
· Press the switch twice for reduced heating effect (one LED in the switch will light up).
· Press the switch a third time to turn the heating off completely.

The seat heating for the passenger seat should be switched off when the seat is not occupied.

pg. 34 Parking brake, Auxiliary socket, Ashtrays

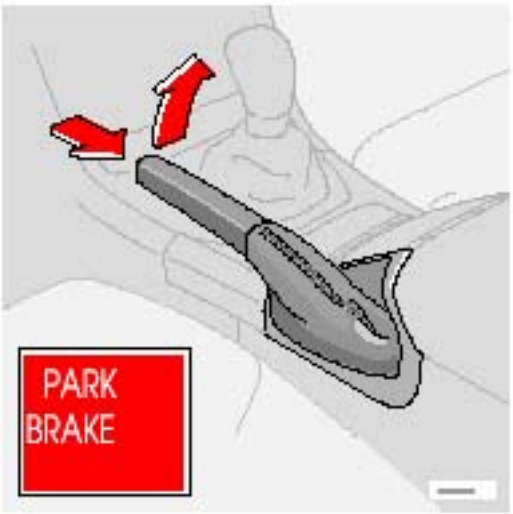

Parking brake (hand brake)

The lever is situated between the front seats. The brake is applied to the rear wheels. The indicator light in the instrument panel will light up to indicate when the parking brake is applied. Apply the parking brake by pulling up firmly on the lever. Release the parking brake by depressing the button at the end of the lever and lowering the lever completely.

WARNING!

· Always use the parking brake (hand brake) when parking. On hills, also turn the front wheels toward the curb.
· The indicator light in the instrument panel will light up even if the parking brake is only applied slightly. Be sure to pull the lever up sufficiently.

Front auxiliary socket

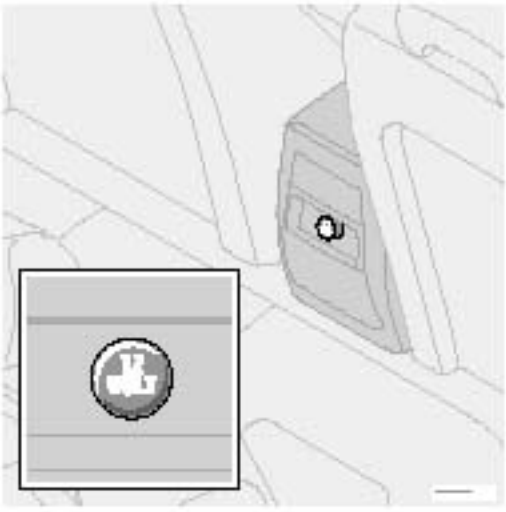

Rear auxiliary socket

Auxiliary sockets

This 12 volt sockets can be used to plug in certain accessories such as cellular telephones, etc. The key must be in position I (or higher) for the auxiliary socket to function.
The auxiliary sockets can also be used as cigarette lighters, which are available at your Volvo retailer.

NOTE: The cover should be kept on when the auxiliary sockets are not in use.

Ashtrays Volvo cars in North America do not have an ashtray in the front seat as standard equipment. If you want to have an ashtray in the front seat, please contact your Volvo retailer.

pg. 35 Electrically operated windows

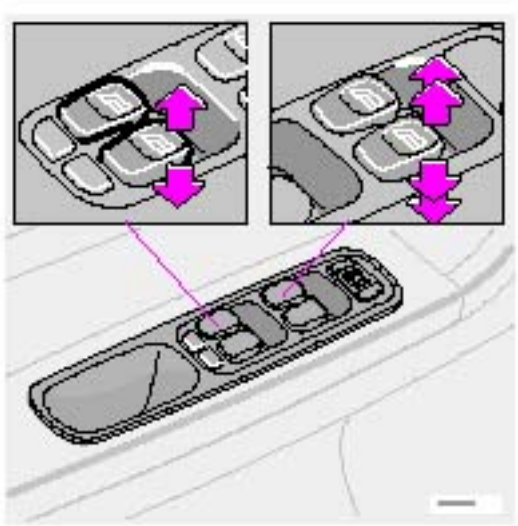

Electrically operated windows

The electrically operated windows are controlled by buttons in the arm rests. The ignition switch must be ON * (ignition key in position I or II) for the electrically operated windows to function.

To lower: Press down the front edge of the button to the first detent ("stop").

To raise: Pull up the front edge of the button to the first detent ("stop").

* The electrically operated windows will also function after the ignition has been switched off **as long as neither of the front doors has been opened**.

Auto up/down function (front doors only):

Either front door window can be opened or closed automatically.

Auto down: Press the front part of the button as far down as possible and release it immediately. To stop the window at any time, pull the button up.

Auto up: Pull the front part of the button up as far as possible and release it immediately. To stop the window at any time, press the button down.

NOTE: The power windows in the front seat have an overload protecting circuit breaker which reverses movement of the power windows to their starting points, if they are obstructed in any way. Thereafter the windows will operate normally again.

WARNING!

· Always remove the ignition key when the vehicle is unattended.
· Make sure that childrens' hands are clear before raising the windows.
· Never leave children unattended in the car.

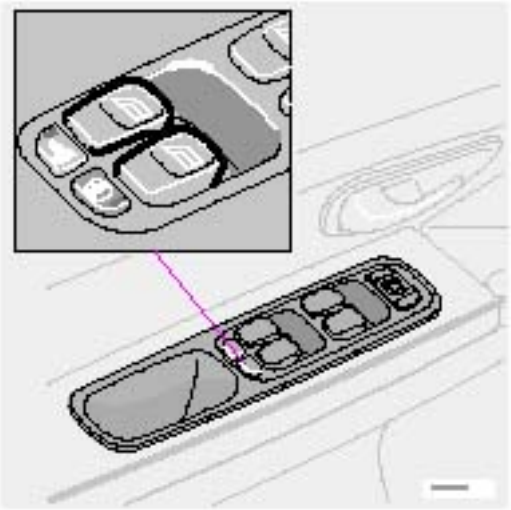

Cutout switch for rear windows

The electrically operated rear door windows can be disabled by a switch located on the driver's door (see illustration).

If the LED in the switch is OFF: The rear door windows can be raised or lowered with the buttons on the rear door armrests or with the buttons on the driver's door armrest.

If the LED in the switch is ON: The rear door windows can only be raised or lowered with the buttons

on the driver's door armrest.

pg. 36 Rearview/sideview mirrors, Vanity mirrors

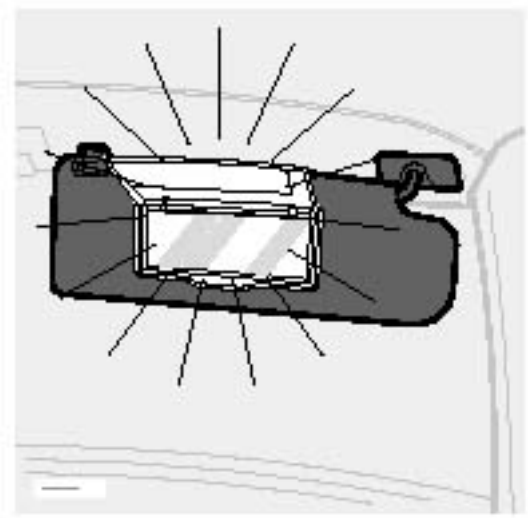

Vanity mirror

Vanity mirrors
The light comes on when the cover is opened.

Rearview mirror

A Normal position

B Night position, reduces glare from following headlights

Autodim function (option)

The autodim function reacts to headlights from following traffic and automatically reduces glare.

NOTE: This function is automatically switched off when the gear selector is placed in the Reverse position.

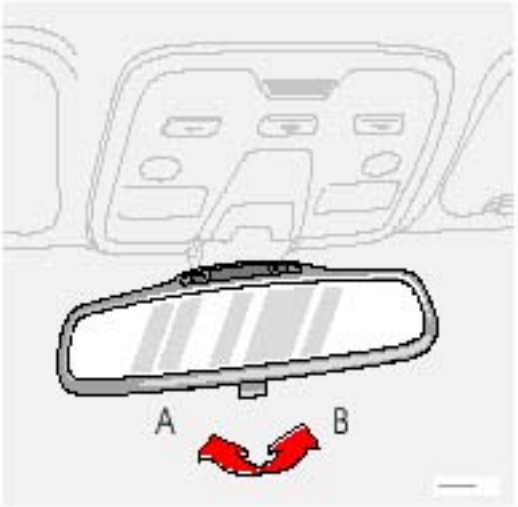

Rearview mirror

Electrically operated sideview mirrors

The mirror control switches are located on the driver's door armrest.

Driver's side: Press the L switch (an LED in the switch will light up) to activate the adjustment control and then use this control to adjust the driver's door mirror.

Passenger's door: Press the R switch (an LED in the switch will light up) and then use the adjustment control to adjust the passenger's door mirror.

After you have adjusted the mirror(s), press the L or R switch again (the LED will go out) to deactivate the adjustment control.

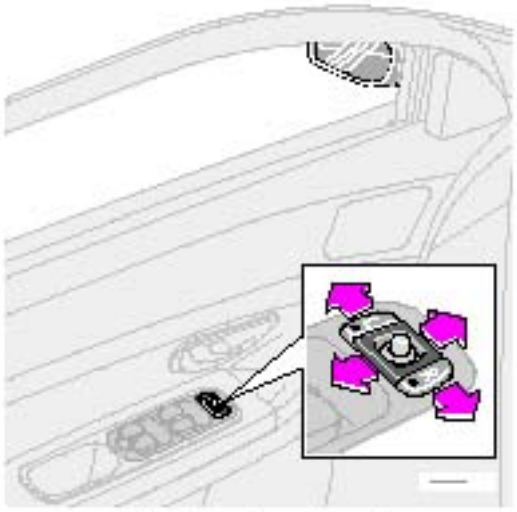

Sideview mirror controls

Remote control (central locking system)
If you lock the car and later unlock it with the same same same same same remote control and open the driver's door, the sideview mirrors will automatically move to the position they were in when you left

the car. See page 57 for more information on this function.

WARNING!

The mirrors should always be adjusted prior to driving. Objects seen in the wide-angle sideview mirror are closer than they appear to be.

pg. 37 Sun roof (option)

Sun roof switch

Electrically operated sun roof

To operate the sun roof, the ignition key must first be turned to the intermediate or drive position (position I or II, or the engine running). · **To slide open the sun roof :** Pull the switch back to the first detent ("stop") and hold it until the sun roof has opened to the position you prefer. The sun roof will initially open to the "comfort" * position. Pull and hold the switch again to open the sun roof completely.
· **AUTO open:** Pull the switch as far back as possible and release it to automatically slide open the sun roof to the "comfort" * position. Pull the switch again to open the sun roof completely.

Ventilation position

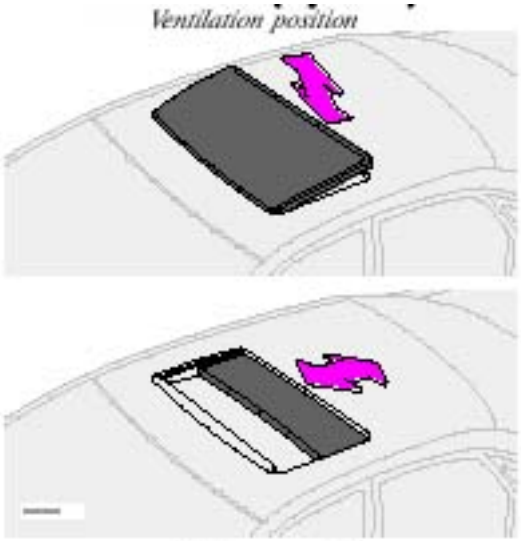

Sliding sun roof

· **To close the sun roof**: Push the switch
forward to the first detent ("stop") and hold it ***until the sun roof has closed completely.***
· **AUTO close:** Push the switch forward as far as possible and release it to automatically close the sun roof.

NOTE: If the sun roof is impeded during **AUTO close**, it will reverse direction, reopen and stop.

· **Ventilation position (opening the rear edge of the sun roof):** With the sun roof closed, push up the rear section of the switch.
To close, pull the front section of the switch straight down until the sun roof has closed completely.

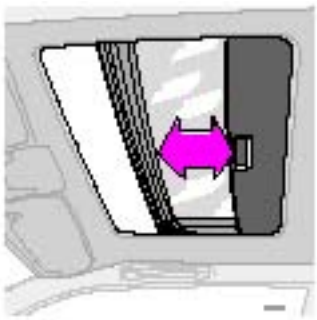

Sun visor

Sun visor: The sun roof also features a sliding sun visor. The visor slides back automatically when the sun roof is opened. The visor must be closed manually.

CAUTION:

Do not attempt to fully close the sun visor when the sun roof is in the ventilation position as this could

damage the mechanism.

WARNING!

The sun roof must never be obstructed in any way when in operation.

* A position where the sun roof is not quite fully open which helps alleviate "rumbling" wind noise.

pg. 38 Sun blinds (option)

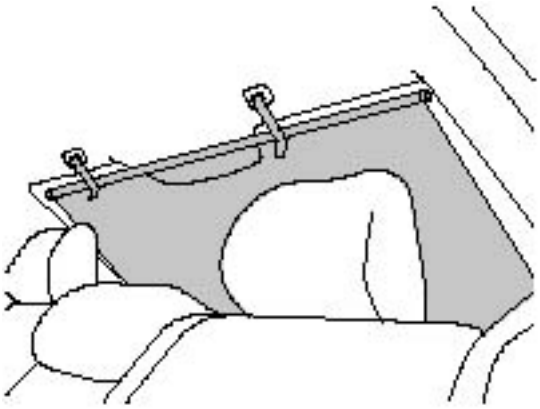

Sun blind - rear window
Pull up the blind from the rear parcel shelf and attach the two hooks in the fasteners in the roof liner above the rear window, as shown in the illustration above.

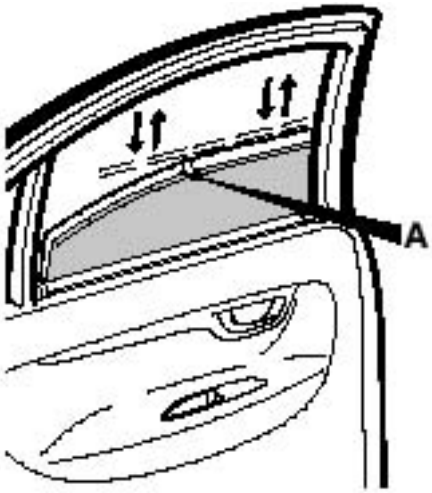

Sun blind - rear side windows
Roll the window down slightly, pull up the blind and place its hook (A) over the upper edge of the

window. The window can then be raised or lowered freely.

Contents | Top of Page

2 0 0 1
VOLVO
S80

Chapter 3 - Climate control system

pg. 39 Climate control system

Ventilation 40

Electronic Climate Control (ECC) 41

Climate control system - general information 44

pg. 40 Ventilation

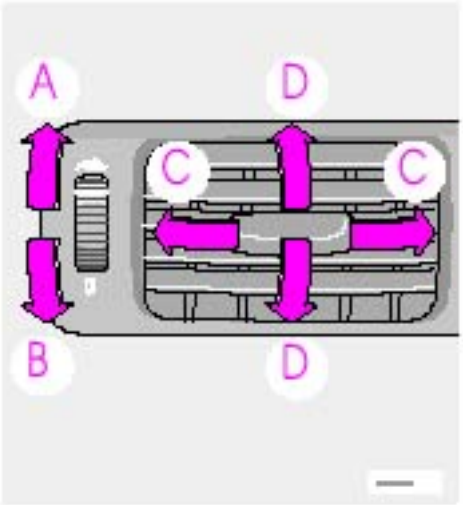

Air vents in dash

Air vents (dash)
A Open
B Closed
C Horizontal air flow
D Vertical air flow

Direct the outer air vents toward the side windows to demist.

In cold weather, close the air vents in the center of the dash to direct as much air as possible toward the windows.

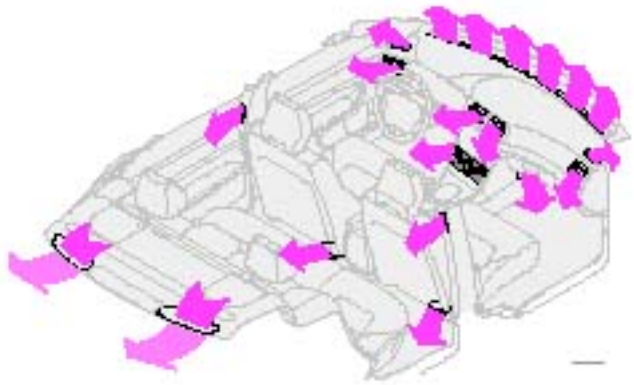

Air flow

The air that is drawn into the passenger compartment is distributed from 14 ventilation points.

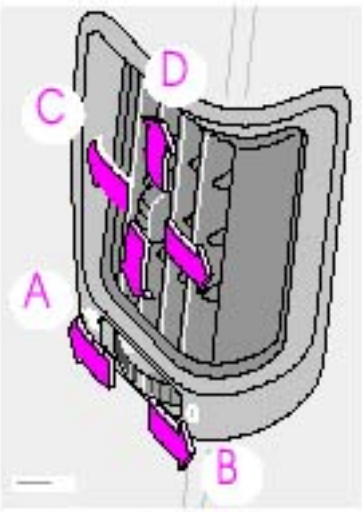

Air vents in door pillars

Air vents in door pillars
A Closed
B Open
C Horizontal air flow
D Vertical air flow

Direct the air vents toward the rear side windows to demist.

Direct the air vents toward the rear seat for the best heating/cooling effect.

pg. 41 Electronic Climate Control (ECC)

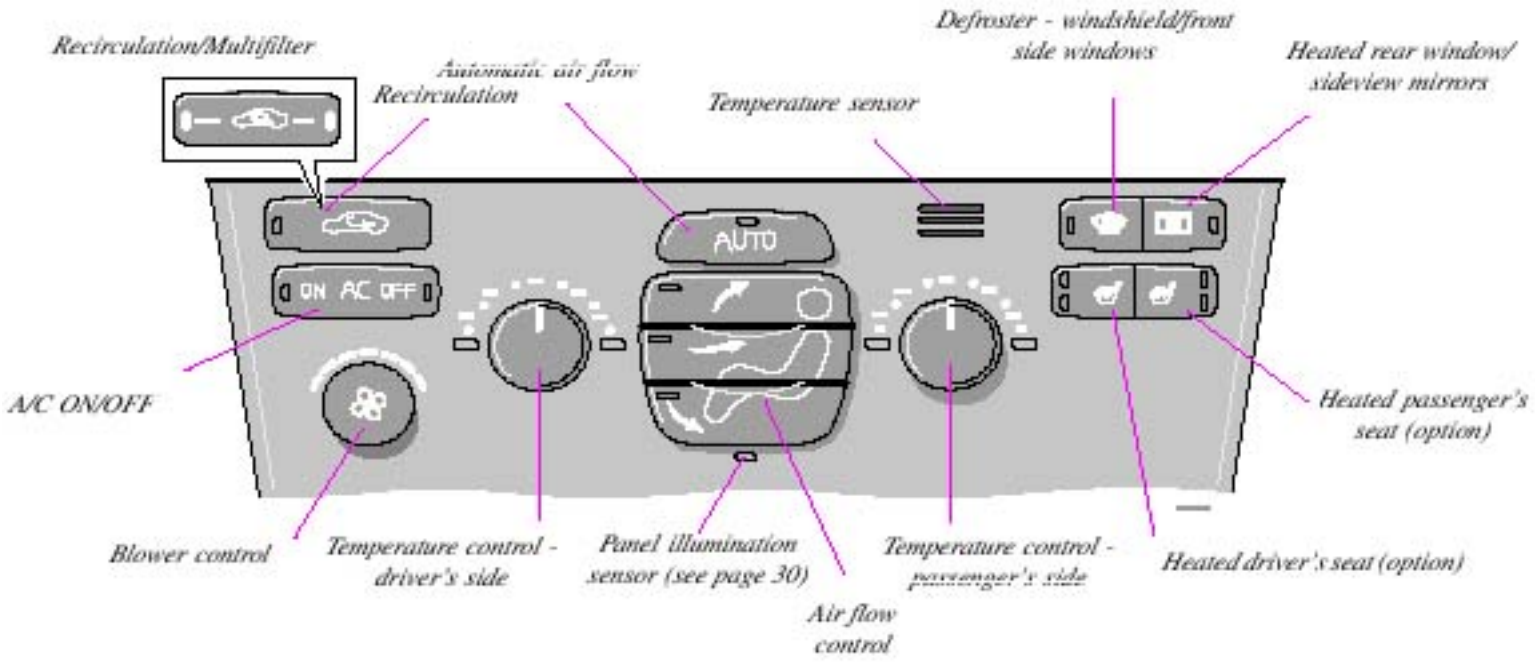

pg. 42 Electronic Climate Control (ECC)

AUTO

This function automatically regulates the Electronic Climate Control system so that the selected temperatures are maintained. The blower, heating, air distribution (air flow) and air conditioning are controlled. If you prefer to manually set any of these functions, the remaining functions will still be controlled automatically. Pressing the AUTO button overrides any settings that were previously made manually.

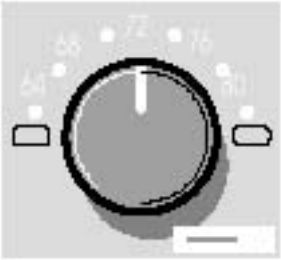

Temperature

These controls are used to individually set the temperature for both sides of the passenger compartment. Please note that the compartment will not be heated or cooled faster by setting the temperature higher or lower than necessary.
Set the control to the temperature you prefer.

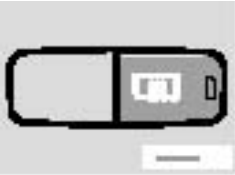

Defroster

This function demists/de-ices the windshield and front side windows. The LED in the switch will light up to indicate that the defrost function is engaged. Blower speed increases automatically and the air in the passenger compartment is dehumidified. Recirculation will not function while defrost is engaged.

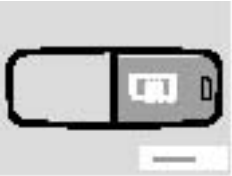

Heated rear window/sideview mirrors

This function demists/de-ices the rear window and sideview mirrors. The LED in the switch will light up to indicate that the heating function is engaged. See page 33 for additional information on this function.

CAUTION:

Never use ice scrapers made of metal as they can easily scratch the mirror surface.

pg. 43 Electronic Climate Control (ECC) - manual settings

Recirculation

Press this switch to engage the recirculation function (air in the passenger compartment recirculates - no fresh air enters the compartment). The LED in the switch will light up to indicate that the function is engaged.

· Use this function if the outside air is contaminated with exhaust gases, smoke, etc or to heat/cool the car quickly.

· Recirculation should not be used for more than 15 minutes. *If your windows begin to fog or mist, make sure that the recirculation function is switched off.*
· Selecting **Defroster** automatically switches recirculation off.
· Timer function: (cars equipped with the optional Interior Quality system do not have the timer function) Pressing and holding the switch for at least 3 seconds activates a timer function. The LED in the switch will flash for approximately 5 seconds. Recirculation will then always operate for periods of 5 to 12 minutes, depending on the ambient temperature, after which it will switch off automatically. Pressing the switch at any time during the recirculation period will disengage the function and allow fresh air into the passenger compartment.
Press and hold the switch again for at least 3 seconds to return the button to its original function (i.e., recirculation will remain on until you switch it off).

Blower control

Turn the control clockwise to increase or counterclockwise to decrease the blower speed. Pressing the AUTO switch will automatically regulate blower speed and override manual adjustment.

NOTE: Turning the blower control counterclockwise as far as possible (an LED next to the control will light up) will turn both the blower and the air conditioning off.

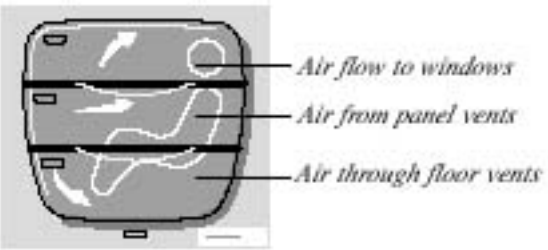

Air flow

Press **AUTO** to automatically regulate air flow or press any combination of the controls shown in the illustration to manually adjust air flow. An LED in

2 0 0 1
VOLVO
S80

Chapter 4 - Interior

pg. 47 Interior

Front seats 48

Coat hanger 49

Interior lighting 50

Storage compartments 51

Storage compartments in center console 52

Spare tire, Cargo net in trunk 53

Folding rear seat backrests, Carrying long loads 54

pg. 48 Front seats

Electrically operated front seats

From the time the driver's door is unlocked, the driver's seat can be adjusted *with the ignition off* during a **10 minute period, if the door remains opened**. If the door is closed, the seat can be adjusted for 40 seconds.
1 - Power seat control panel
2 - Lumbar support

Turn the control for softer or firmer lumbar support.

Move the seat as far rearward as possible for easiest access to the lumbar support control.

Electrically operated seats with memory function *

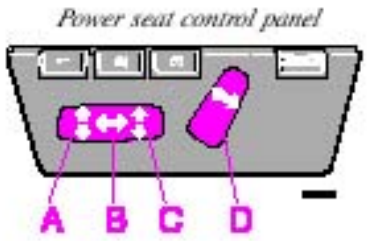

A Front edge of seat (raise/lower)
B Forward - rearward
C Rear edge of seat (raise/lower)
D Backrest tilt

WARNING!

· From the time the driver's door is unlocked, the driver's seat can be adjusted *with the ignition off* during a **10 minute period, if the door remains opened** (40 seconds if the door is closed). Therefore, children should never be left unattended in the car.
· Movement of the seat can be STOPPED at any time by pressing any button on the power seat control panel.
· Do not adjust the seat while driving. The seat should be adjusted so that the brake pedal can be depressed fully. In addition, position the seat as far rearward as comfort and control allow.
· The seat rails on the floor must not be obstructed in any way when the seat is in motion.

Programming the memory

Three seat positions can be programmed. To program a seat position:

1 Adjust the seat to the desired position.

2 Hold down the MEM button.

3 While holding down the MEM button, press button 1 to program the current position of the seat.

Buttons 2 and 3 can be programmed in the same way.

To move the seat to a programmed position, press and hold down button 1, 2 or 3 until the seat moves to the preset position and stops.

As a safety precaution, the seat will stop automatically if the button is released before the seat has reached the programmed position.

NOTE: The seat has an overload protector which engages if an object blocks the movement of the seat. If this happens, remove the object and wait 20 seconds before operating the seat again.

* Only the driver's seat is equipped with the memory function.

pg. 49 Front seats, Coat hanger

Electrically operated seats - general information

Adjusting the front seats:

Passengers's seat: The passenger's seat can only be adjusted if the ignition key is in position I or II (see page 48).

Driver's seat: The driver's seat can be adjusted if the ignition key is in position I or II (see page 48). However, it can also be adjusted:
· Within 40 seconds after the ignition has been switched off (even if the key has been removed from the ignition switch).
· Within 40 seconds after the driver's door has been unlocked with the key or remote control and opened.

The key does not have to be in the ignition switch during this period.

Remote control (central locking system)

If you lock the car and later unlock it with the **same** remote control and open the driver's door, the driver's seat will automatically move to the position it was in when you left the car. See page 56 for more information on this function.

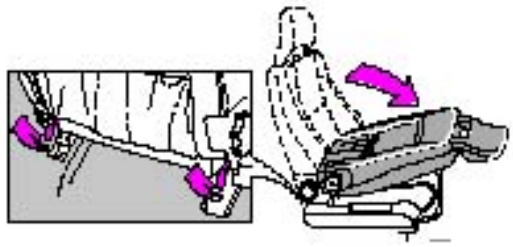

Folding passenger's seat backrest

The passenger seat backrest can be folded down to the horizontal position for carrying long loads. To fold down the backrest:

· Move the seat as far rearward as possible
· Adjust the backrest tilt to the most upright position
· Lift the catches on the lower rear side of the backrest
· Without releasing the catches, push the backrest forward
· Move the seat as far forward as possible

WARNING!

Cover sharp edges on the load to help prevent injury to occupants. Secure the load to help prevent shifting during sudden stops.

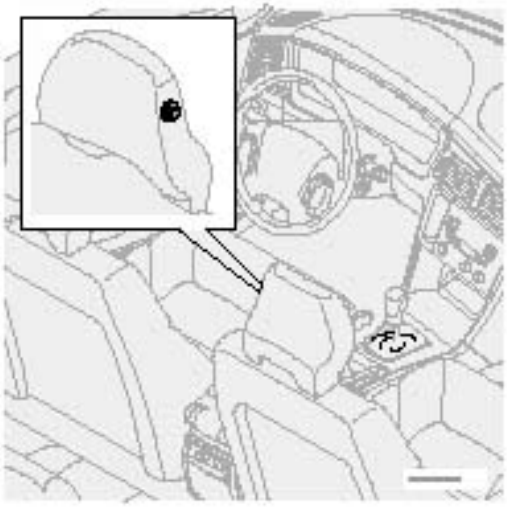

Coat hanger
Use the coat hanger for clothes of normal weight.

pg. 50 Interior lighting

Courtesy lights

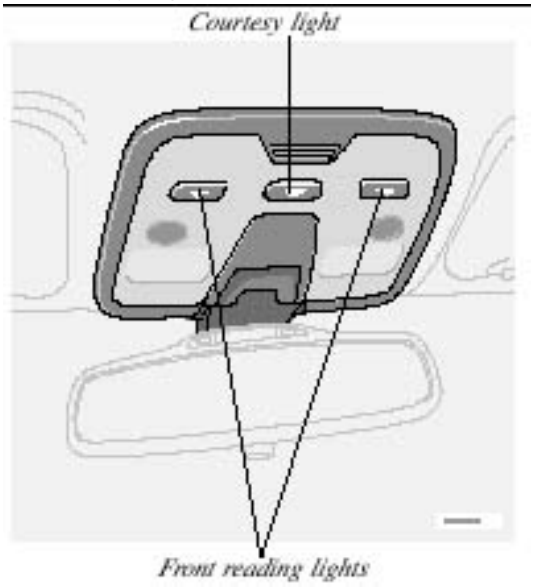

Courtesy light

The courtesy light can be turned on or off by pressing the button. The light also has a timer function which turns the light on for 30 *seconds* if:
· You unlock the car from the outside with the key or remote control.
· You switch off the ignition (turn the key to position 0).

The courtesy light stays on for 10 *minutes* if one of the doors is left open after the car is unlocked.

The courtesy light switches off if:
· The engine is started.
· The car is locked from the outside with the key or remote control.

The interior courtesy light can be switched on or off at any time by pressing the center button in the panel above the rearview mirror. When switched on with the engine off, the light will stay on for 10 minutes. When switched on with the engine running, the light will stay on indefinitely.The light may be switched off at any time by pressing the center button a second time.

The courtesy light timer periods can be changed.Consult your Volvo retailer.

Overriding the Interior and Trunk Courtesy Lights

Normally if a car door is left open with the engine turned off, the interior courtesy light will stay on for 10 minutes. Normally, if the trunk is left open with the engine turned off, the trunk courtesy lights will stay on for 10 minutes.

If a car door is left open or the interior courtesy lights are turned on while the engine is left running, the interior courtesy lights will stay on indefinitely. Likewise, if the trunk is left open while the engine is running, the trunk courtesy light will stay on indefinitely.

At times, you may wish to be assured that the courtesy lights will stay off regardless of door or trunk lid position.

To switch off the interior and trunk courtesy lights indefinitely, press and hold the center button in the panel above the rearview mirror for 3 seconds.The courtesy lights will go off and remain off until the center button is pressed again.

Rear reading lights

Reading lights - front/rear

The reading lights can be switched on or off by pressing the respective buttons. These lights are designed to switch off automatically after 10 minutes or can be switched off at any time by pressing the button.

pg. 51 Storage compartments

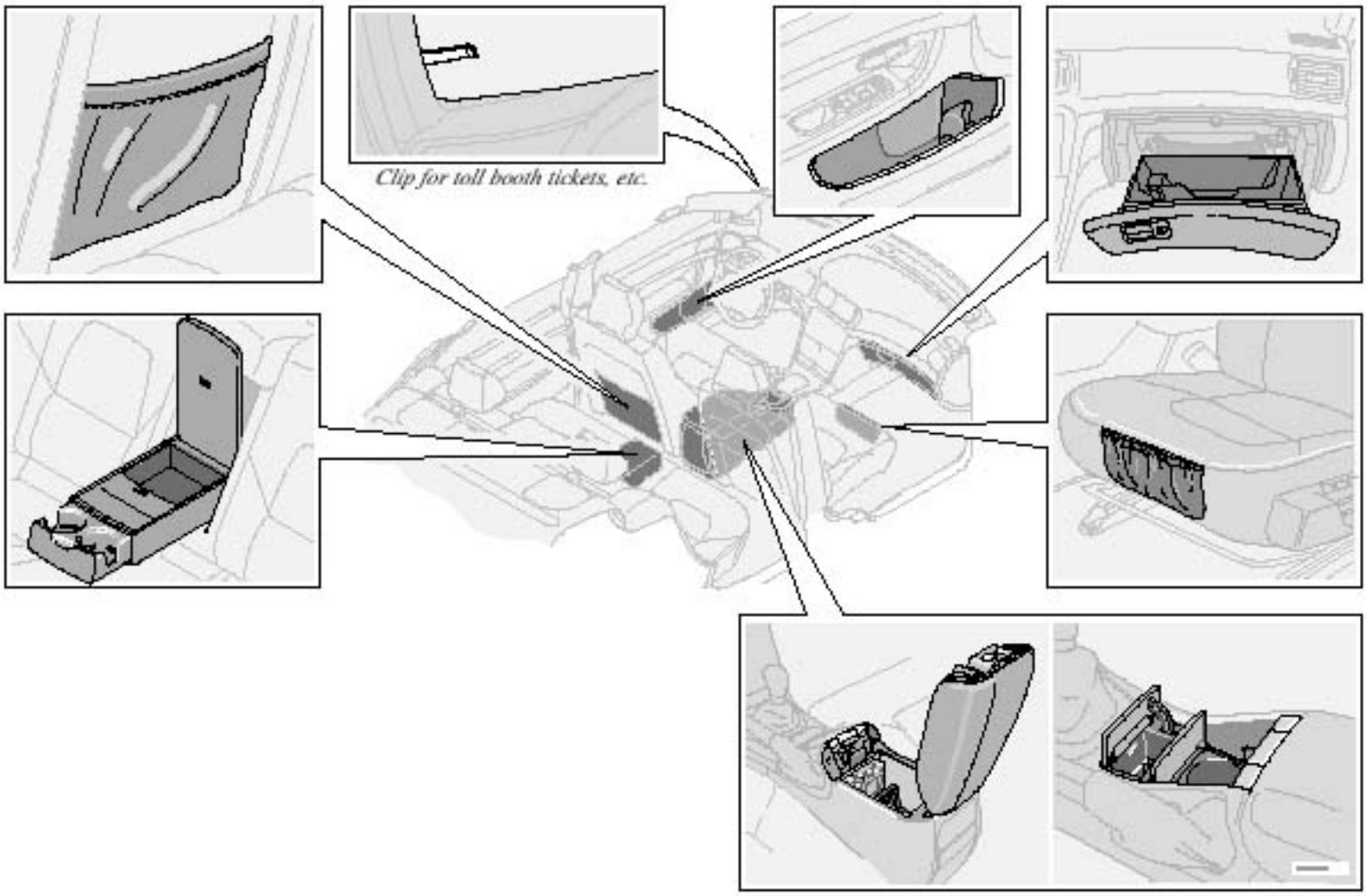

WARNING!

Packages on the rear window shelf can obscure vision and may become dangerous projectiles in the event of a sudden stop or an accident.

Anchor any heavy objects to help prevent them from moving during sudden stops.

pg. 52 Storage compartment in center console

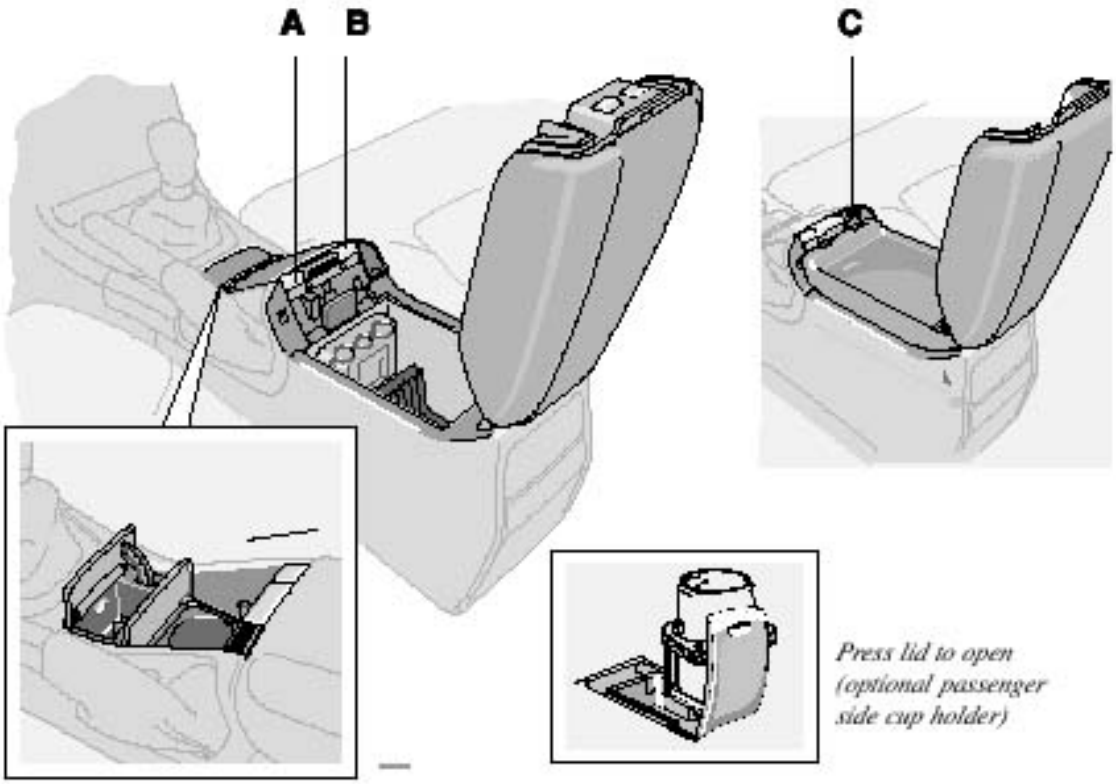

Press lid to open

Storage compartment in center console/cup holders

· Press button A to pop open the cup holder.
· Press button B to open the storage space in the center console for cassettes, change holder, etc.
· Press button C to open the outer cover only over the storage compartment.

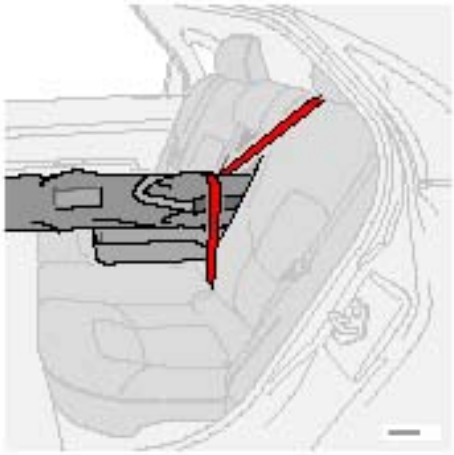

Secure long loads with the seat belt

Carry long loads

The center backrest cushion folds forward, allowing you to transport long, light cargo such as skis in the trunk of your car. To lower the backrest:
· Pull the right release control handle in the trunk to release the backrest (see page 54).
· From the rear seat, fold down the right section of the backrest slightly *.

· Release the flap by pushing the catch (located on the rear side of the backrest) upward and pulling the flap forward.
· Return the backrest to the upright position.
* If your car is equipped with the optional integrated child booster cushion, this cushion must be folded down before you fold down the backrest (see page 13).

pg. 53 Spare tire, Cargo net in trunk

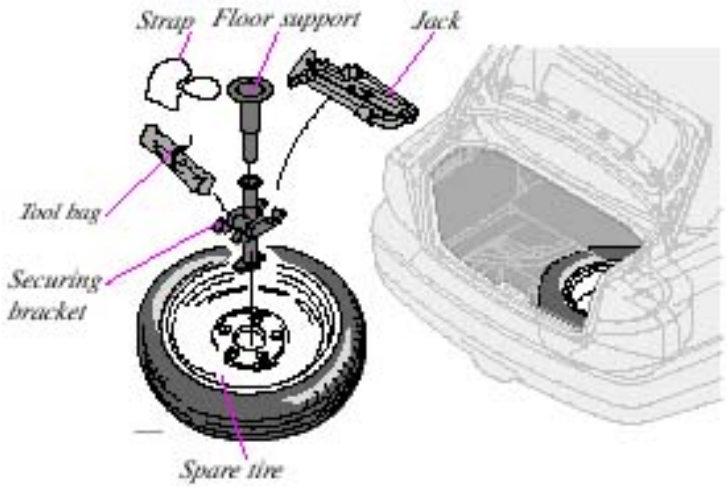

Spare tire

The spare tire, jack and tool bag are located under the floor of the trunk. To access the spare tire: · Raise the rear edge of the floor of the trunk and fold it back toward the rear seat backrest.
· Lift out the trunk floor support (certain models) from the spare tire securing bracket.
· Release the strap to lift out the jack and tool bag.
· Unscrew the securing bracket and lift out the spare tire.
· To return the spare tire to the trunk, follow the reverse procedure.

WARNING!

Make sure that the spare tire, jack and tool bag are properly secured with the securing bracket and strap to help keep these components in place in the event of a sudden stop.

NOTE: See page 88 for information on how the jack should be used.

Cargo net in the trunk

The cargo net in the trunk can be used to secure light objects.Pull the net out and slide the runner in the handle down into one of the two slots provided at the rear edge of the trunk. Use the release tab to release

tension on the net while it is being placed around an object. Be sure the net is then pulled taut around the object.

The net can be retracted when not in use.

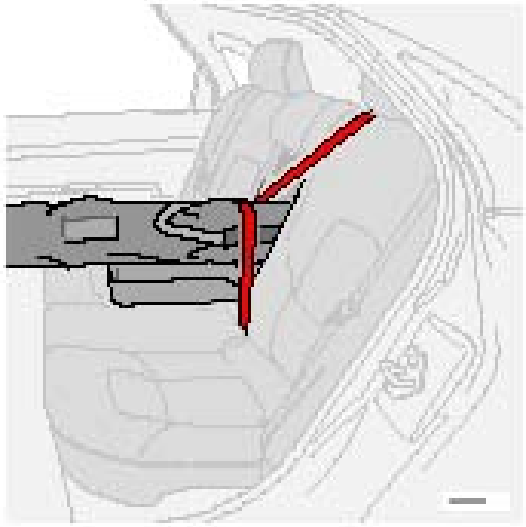

Secure long loads with the seat belt

NOTE: If you have purchased the accessory plastic floor cover for the trunk, it may be necessary to cut notches in the rear edge of this cover so that the runner on the cargo net can be securely pressed into the slots provided.

WARNING!

Never use this net to secure sharp or heavy objects. In such cases, tie down the object using the cargo eyelets provided. Both rear seat backrests should be secured in the upright position when the cargo net is in use.

pg. 54 Folding rear seat backrests, Carrying long loads

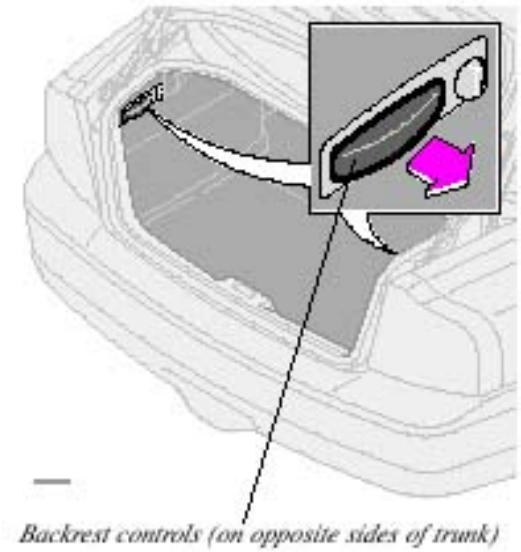

Backrest controls (on opposite sides of trunk)

Folding rear seat backrest The rear seat backrest is split into two sections. Each section can be folded independently to allow you to transport long objects.

To fold down the backrest(s):
· Pull the release control handle(s) in the trunk to release the backrest(s) (see illustration above). If the outboard rear head restraints are folded down, they should be returned to the upright position before folding the backrest down. It may be necessary to manually adjust the center head restraint.
· Fold the backrest down.

WARNING!
All S80 cars feature 60/40 split fold-down rear seats. This function is performed by handles inside the trunk, and also provides a means for children and adults to enter the passenger compartment in the event they become locked inside the trunk. Adults are advised to familiarize them-selves with the operation and location of the release handles. To fold down the rear seats from inside the trunk, pull the release control handles located on either side of the trunk.

WARNING!

· Keep vehicle doors and the luggage compartment locked and keep keys out of a child's reach. Unsupervised children could lock themselves in an open trunk and risk injury. Children should be taught not to play in vehicles.
· On hot days, the temperature in the trunk or vehicle interior can rise very quickly. Exposure of people to these high temperatures for even a short period of time can cause heat-related injury or death. Small children are particularly at risk.

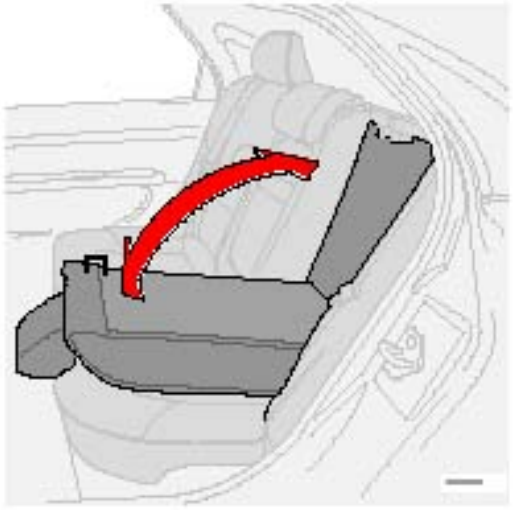

WARNING!

· When the backrest is returned to the upright position, check that it is properly locked in place. Return the head restraints to the upright position.
· Long loads should always be securely anchored to help avoid injury in the event of a sudden stop.
· Always turn the engine off and apply the parking brake when loading/unloading the vehicle.
· Place the transmission in the P (PARK) position to help prevent inadvertent movement of the gear selector.

Contents | Top of Page

2 0 0 1
VOLVO
S80

Chapter 5 - Keys, Locks, Alarm

pg. 55 Keys, Locks, Alarm

Keys, Exterior courtesy lights, Locking and unlocking the car 56

Remote keyless entry system 57

Unlocking the trunk with the master key, Central locking buttons, "Trunk lock" function 59

Alarm 60

Child safety locks - rear doors 62

pg. 56 Keys, Exterior courtesy lights, Locking and unlocking the car

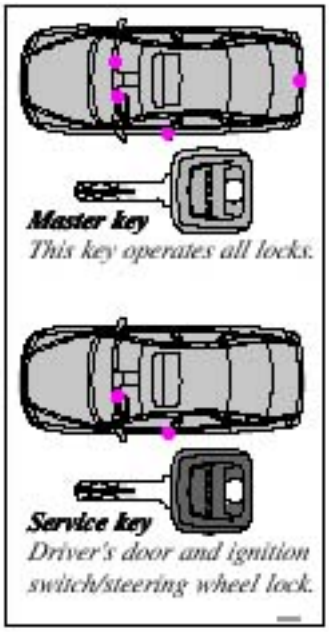

Keys

Two keys are provided with your car; a master key and a service key. The master key, the remote control, and the central locking button may all be used to lock and unlock all of your car's locks.
The service key will operate only the driver's door and the ignition switch. It is intended to help deter unwanted entry into the glove compartment and trunk.

Turn the key once to unlock the driver's door only.

Turn the key again (within 10 seconds) to unlock all doors and the trunk.
One turn with the key towards lock in the drivers door locks all doors, trunk.
Use the switch on the front door armrests to lock/unlock the car from the inside.

WARNING!

If the doors are locked while driving, this may hinder rapid access to the occupants of the car in the event of an accident. (Also see information on "Child safety locks").

Note: To help prevent accidentally locking the keys in the car, the central locking system is designed to unlock the doors immediately if the key is left in the ignition switch, the car is locked using the lock button on the door and the door is then closed. **A sound from the lock will be audible at this time.**

Please note that this function will not unlock the doors if the engine is running.

Immobilizer (start inhibitor)

Each of the keys supplied with your car contains a coded transmitter. The code in the key is transmitted to an antenna in the ignition switch where it is compared to the code stored in the start inhibitor module. The car will start only with a properly coded key.
If you misplace a key, take the other keys to an authorized Volvo retailer for reprogramming as an antitheft measure.

This device complies with part 15 of the FCC rules. Operation is subject to the following condition: (1) This device may not cause harmful interference, and (2) this device must accept any interference received, including interference that may cause undesired operation.

Courtesy lights

Home Safe System

When you leave your car at night, you can make use of the courtesy lighting function:
· Remove the key from the ignition switch.
· Pull the direction indicator lever towards the steering wheel (as when using the headlight flasher function).
· Exit the car and lock the doors.

The headlights, parking lights, license plate lights and the lights in the sideview mirrors will now come on and remain on for 30, 60 or 90 seconds (the time interval is at your discretion and can be changed by an authorized Volvo retailer).

Approach lighting

When approaching the car at night, press the yellow button in the central locking remote control (see illustration on page 57). This lights up the interior courtesy light, parking lights, license plate lights and the lights in the sideview mirrors.

pg. 57 Remote keyless entry system

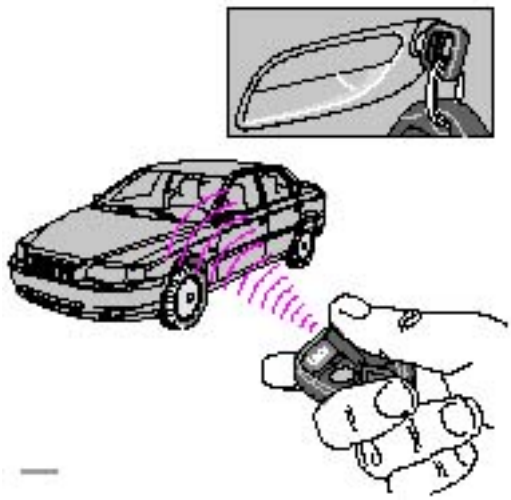

Remote keyless entry system

Your car is equipped with a remote control transmitter. This transmitter uses a radio signal to allow "keyless" entry into the passenger compartment or the trunk. You will be supplied with two coded key ring transmitters, which will enable you to lock/unlock all doors and the trunk from a distance of 10-15 feet (3-5 meters).

On vehicles equipped with an alarm, the alarm will also be activated/deactivated by this system.

The car can also be locked/unlocked with the key.

As an extra security precaution in certain situations (valet parking, etc.), Volvo recommends that the transmitter not be included when the keys are given to anyone. The service key can be used instead. If one of the transmitters is misplaced, contact the nearest authorized Volvo retailer for assistance.

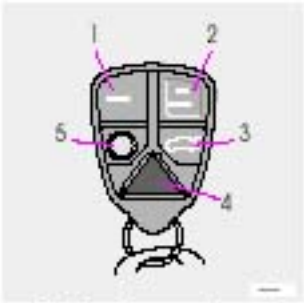

Buttons in remote control

1 - Lock, 2 - Unlock, 3 - Open trunk
*4 - "Panic" function *, 5 - Approach lighting*

Using the remote control

· Press the **LOCK** button once to lock all doors and trunk.

· Press the **UNLOCK** button **once** to unlock the driver's door only. Press this button again (within 10 seconds) to unlock all doors, trunk.
· To pop open the trunk (without unlocking the other doors), press the **OPEN trunk** button *twice* within 3 seconds.

* See page 60 for more information on this function.

Remote keyless entry system and driver's seat

The remote control transmitter also controls the electrically operated driver's seat in the following way:
· Adjust the seat to your preferences.
· When you leave your car, lock it using the remote control.
· The next time you unlock the driver's door with the **same** remote control (the one you used to lock the doors with) *and open the driver's door*, the driver's seat will automatically move to the position in which you left it.
The seat will move to this position even if someone else has adjusted the seat since you last drove the car.

NOTE:
· This feature will work in the same way with all of the remote control transmitters (up to 3) that you use with your car.
· This feature will not function if you lock your car with the key.

This device complies with FCC rules Part 15. Operation is subject to the following two conditions: (1) This device may not cause harmful interference and (2) this device must accept any interference that may be received, including interference that may cause undesired operation.

pg. 58 Remote keyless entry system

NOTE:
· If the doors are unlocked, the locks will automatically reengage (re-lock) and the alarm will reset after 2 minutes unless a door has been opened.
· The keys may also be used to lock and unlock the doors, and to activate and deactivate the alarm system.
· To avoid leaving your keys in the car, make a habit of always locking the car with the remote control.

Automatic locking (Retailer installed option on certain models) If your car is equipped with this option, all unlocked doors will automatically be locked when the car exceeds a speed of 3 mph (5 km/h). Please be aware of the following:
· If the doors are unlocked using the central locking button after the doors have automatically locked and no door has been opened, the doors will not automatically re-lock the next time the car exceeds 3 mph (5 km/h).
· If any doors are unlocked by pulling up the lock knob after the doors have been automatically locked and no door has been opened, the doors will not automatically re-lock the next time the car exceeds 3 mph (5 km/h).
· If a door is opened after the car has exceeded 3 mph (5 km/h), that door will not be re-locked.

WARNING!
Never use the transmitter to lock the doors from inside the car.
Doing so would ACTIVATE:
· the break-in alarm, which would sound if one of the doors were opened.
· the interior motion and inclination alarm sensors, if equipped. Doing so would DEACTIVATE:
· the sunroof and interior courtesy light controls.
· the central locking buttons on the front door armrests, although the interior door handles would still function to allow occupants to leave the car.
Disabled features would remain disabled until the remote were used again to unlock the car.
In addition, locking an occupied vehicle would hinder rapid access to the occupants in an accident or emergency.

td>

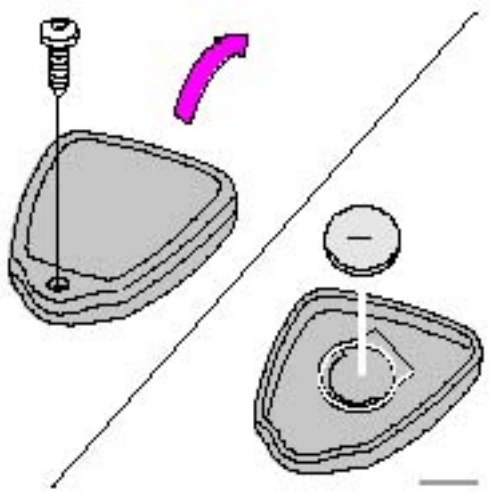

Remote keyless entry system - replacing batteries

If the range of the transmitter is noticeably reduced, this indicates that the battery is weak and should be replaced.

To replace the battery
· Remove the screw on the transmitter cover with a small screwdriver
· Remove the cover carefully pressing it rearward/upward
· Replace the battery with a new 3-volt, CR 2032 battery. The battery should be inserted with the minus side upward. Avoid touching the contact surfaces of the battery with your fingers.
· Reinstall the cover and tighten the screw to help protect the transmitter.

pg. 59 Locking and unlocking the car

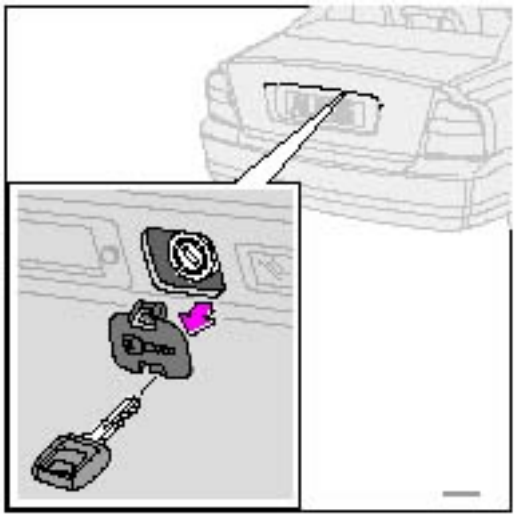

Unlocking the trunk with the master key

Normally, the trunk should be locked and unlocked via the central locking system using the remote control or by using the key in the driver's door lock. The master key should be used only if it is not possible to unlock the trunk via the central locking system.

NOTE: Unlocking the trunk in this manner will cause the alarm to sound. See page 60 for information on turning off the alarm. Unlocking the trunk this way will not unlock the other doors.

If, for any reason, it should be necessary to unlock the trunk with the master key:
· Press the key into the upper or lower edge of the cover over the lock in the trunk lid.
· Move the key upward or downward to remove the cover.
· Insert the master key in the lock and unlock the trunk.

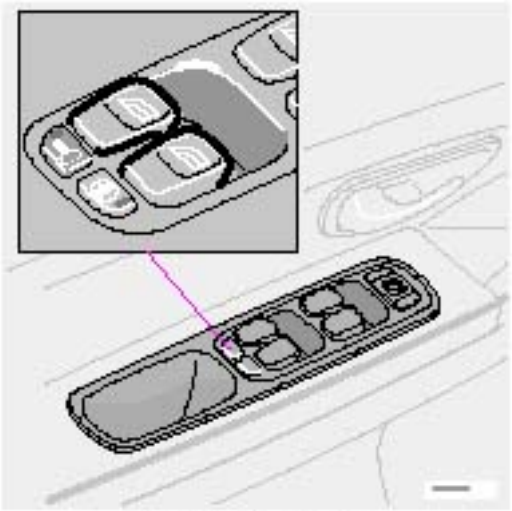

Central locking buttons

Central locking buttons

These buttons (located on the both front door armrests) can be used to lock/unlock all doors and the trunk and set the alarm.

The lock buttons on all doors can be used in the same way.

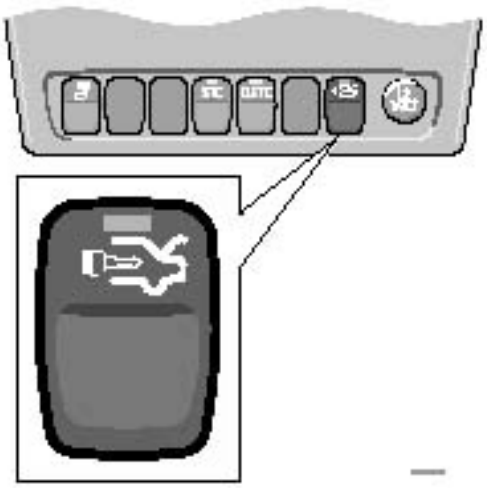

*Trunk lock button**

"Trunk lock" function

Pressing this switch locks the trunk, even if the
doors are unlocked. The trunk will remain locked even if the doors are locked/unlocked using the **master** key or the remote control.

To use this function:
· Turn the **master** key to position II.
· Press the "trunk lock" button. An LED in the button will light up and a message will be displayed in the text window to indicate that this function is activated.
· The function can be turned off (deactivated) by turning the ignition key to position II and pressing the "trunk lock" button again (the LED in the button will go out).

* The position of this button may vary, depending on the specifications of your car.

---

pg. 60 Alarm

Alarm

The alarm is automatically set (armed) whenever you lock your car.

When armed (set), the alarm continuously monitors a number of points on the car. The following conditions will set off the alarm:

· The hood is forced opened.
· The trunk is forced opened.
· A door is forced opened.
· The ignition switch is tampered with.
· If there is movement in the passenger compartment (if the car is equipped with the optional movement sensor).
· The car is lifted or towed (if the car is equipped with the optional inclination sensor).
· The battery is disconnected (while the alarm is set).

Arming (setting) the alarm

Press the LOCK button on the remote control, lock the car using the key in the driver's door or press the central lock button on one of the front doors with the door open. One long flash of the turn signals will confirm that the alarm is set.

Disarming the alarm

Press the UNLOCK button on the remote control or unlock the doors with the key.

Turning off (stopping) the alarm

If the alarm is sounding, it can be stopped by pressing the UNLOCK button on the remote control or by unlocking the driver's door with the key.

Visual alarm signal

The visual alarm signal is given by flashing all turn signals and turning on the interior lighting for approximately 5 minutes.

Audible alarm signal

An audible alarm signal is given by a battery powered siren. One alarm cycle lasts for 25 seconds.

"Panic" function

In an emergency situation, this feature can be used to attract attention.

Activate the "panic" function by pressing the red button on the remote control (see illustration on page 57) for at least 3 seconds or by pressing this button twice within 3 seconds. The turn signals will flash, the interior lights will go on and the car's horn will sound.

The function can be turned off by pressing any of the buttons on the remote control or will stop automatically after 25 seconds. When a button is pressed, there is a 5 second delay before the panic alarm is deactivated.

NOTE: This button will **NOT** unlock the car.

pg. 61 Alarm

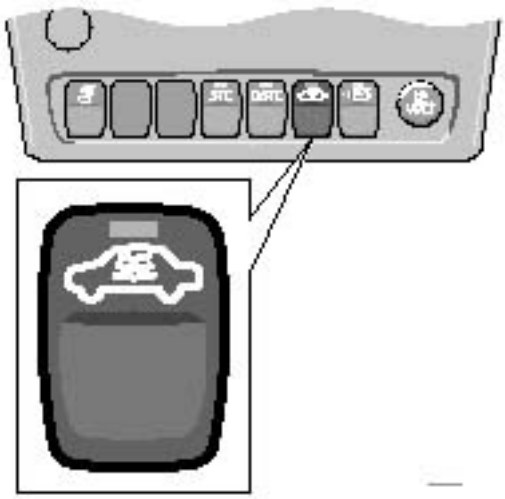

Temporarily disconnecting the alarm sensor(s) - option

This button will only be found in cars equipped with the optional inclination and/or movement sensors.

In certain situations it may be desirable to turn off the optional inclina-tion and movement alarm sensors if, for example, you drive your car onto a ferry where the rocking of the boat could trigger the alarm or if a pet is left in the car with the doors locked.

To temporarily turn off the inclination and movement alarm sensor frpm the alarm system:

From the time the ignition key is turned from the Drive position (position II) until you lock the car, you can press the button in the center console *. The LED in the switch will light up and a message will be displayed in the text window to indicate that the sensors are disconnected.

The car can then be locked in the usual way to set the alarm.

NOTE: The optional sensors are automatically reconnected to the alarm system the next time the car is unlocked and then locked again.

LED alarm status signals

The status of the alarm system is indicated by the red LED at the top of the dash:

· LED off - the alarm is not armed
· LED flashes once per second - the alarm is armed
· LED flashes rapidly before the ignition is switched on - the alarm has been triggered
· **Fault in the alarm system:** If a fault has been detected in the alarm system, a message will be displayed in the text window. Contact a Volvo retailer.

Automatic reset function

If the car is unlocked with the remote, the car will re-lock and the alarm will re-arm after 2 minutes unless a door or the trunk has been opened.

* The position of this button may vary, depending on the specifications of your car.

pg. 62 Child safety locks - rear doors

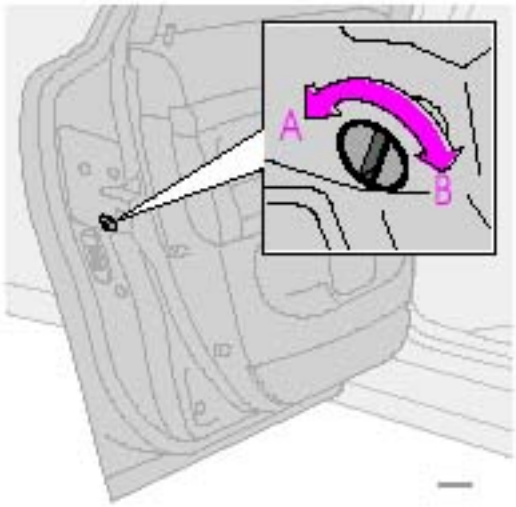

Child safety lock control in left rear door

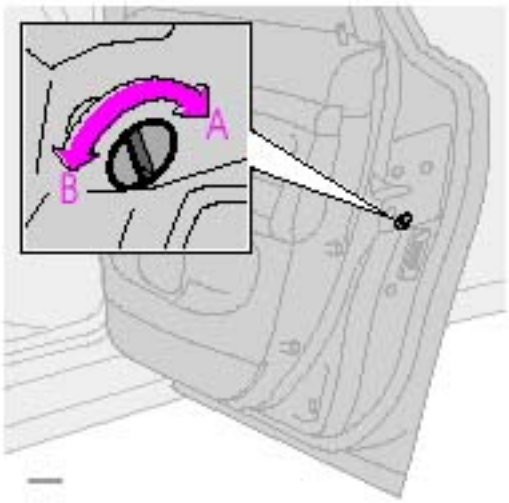

Child safety lock control in right rear door

Child safety locks - rear doors

The controls are located on the rear door jambs. Use a screwdriver to adjust these controls.

A The door cannot be opened from the inside. Normal operation from the outside.

B The door lock functions normally.

WARNING!

Remember, in the event of an accident, the rear seat passengers cannot open the doors from the inside with the buttons in position A.

Contents | Top of Page

2 0 0 1
VOLVO
S80

Chapter 6 - Starting and driving

pg. 63 Starting and driving

Fuel requirements 64

Refueling 65

Starting the engine 66

Automatic transmission 67

Driving economy 71

Points to remember 72

Emergency towing 74

Vehicle towing information 75

Towing a trailer 76

Jump starting 79

Winter driving 80

Long distance trips 81

Three-way catalytic converter 82

pg. 64 Fuel requirements

NOTE ENGINE OIL:

Although some oil consumption occurs during normal engine operation, more oil is consumed when the engine is new as the internal parts generate higher friction while wearingin to each other. **From the time the engine is new until the first service is performed, the oil consumption could be higher than normal. For this reason, it is especially important to check the oil every time you refuel your car during this period. See page 115.**

Fuel requirements

Octane rating

Volvo engines are designed for optimum performance on unleaded premium gasoline with an octane rating. AKI of 91, or above. AKI (ANTI KNOCK INDEX) is an average of the Research Octane Number, RON, and the Motor Octane Number, MON. (RON + MON/2).

The minimum octane requirement is AKI 87 (RON 91).

Deposit control gasoline (detergent additives)

Volvo recommends the use of gasoline containing deposit control additives. These additives have shown to be efficient in keeping injectors and intake valves clean. Consistent use of deposit control gasolines will help ensure good driveability and fuel economy. If you are not sure whether the gasoline contains deposit control additives, check with the service station operator.

Unleaded fuel

Each Volvo has a three-way catalytic converter and must use only unleaded gasoline. U.S. and Canadian regulations require that pumps delivering unleaded gasoline be labelled "UNLEADED". Only these pumps have nozzles which fit your car's filler inlet. It is unlawful to dispense leaded fuel into a vehicle labelled "unleaded gasoline only". Leaded gasoline damages the three-way catalytic converter and the heated oxygen sensor system. Repeated use of leaded gasoline will lessen the effectiveness of the emission control system and could result in loss of emission warranty coverage. State and local vehicle inspection programs will make detection of misfueling easier, possibly resulting in emission test failure for misfueled vehicles.

NOTE: Some U.S. and Canadian gasolines contain an octane enhancing additive called methyl-cyclopentadienyl manganese tricarbonyl (MMT). If such fuels are used, your Emission Control System performance may be affected, and the Check Engine Light (malfunction indicator lamp) located on your instrument panel may light. If this occurs, please return your vehicle to an authorized Volvo retailer for service.

Gasoline containing alcohol and ethers

"Oxygenated fuels"

Some fuel suppliers sell gasoline containing "oxygenates" which are usually alcohols or ethers. In some areas, state or local laws require that the service pump be marked indicating use of alcohols or ethers. However, there are areas in which the pumps are unmarked. If you are not sure whether there is alcohol or ethers in the gasoline you buy, check with the service station operator. To meet seasonal air quality standards, some areas require the use of "oxygenated" fuel.

Volvo allows the use of the following "oxygenated fuels; however, the octane ratings listed on this page must still be met.

Alcohol — Ethanol: Fuels containing up to 10% ethanol by volume may be used. Ethanol may also be referred to as Ethyl alcohol, or "Gasohol".

Ethers — MTBE: Fuels containing up to 15% MTBE may be used.

pg. 65 Refueling

Refueling

The fuel tank is designed to hold approximately 21.1 US gal. (80 liters) with sufficient volume left over to accommodate possible expansion of the fuel in hot weather. Be aware that the "usable" tank capacity will be somewhat less than the specified maximum. When the fuel level is low, such factors as ambient temperature, the fuel's "Reid vapor pressure" characteristics, and terrain can affect the fuel pumps' ability to supply the engine with an adequate supply of fuel. Therefore, it is advisable to refuel as soon as possible when the needle nears the red zone, or when the fuel warning light comes on.

Fuel filler door

If you lock your car with the key or remote control, the fuel filler door will lock after a 10- minute delay. If you intend to leave your car while it is being refueled, this feature enables you to lock the doors/trunk while leaving the fuel filler door unlocked.

You can also keep the car locked if you remain inside it during refueling. The central locking button does not lock the fuel filler door. Be sure the fuel filler door is not obstructed and is completely closed after refueling.

Open the fuel filler cap slowly during hot weather conditions.

NOTE: During a transitional period, a small number of service stations may still have fuel nozzles that are not compatible with the fuel filler neck on cars equipped with the evaporative control system. Please refer to page 109 for additional information.

CAUTION:
· Do not refuel with the engine running *. Turn the ignition off or to position I. If the ignition is on, an incorrect reading could occur in the fuel gauge.
· After refueling, close the fuel filler cap by turning it clockwise until it *clicks* into place *.
· Allow for fuel expansion by not overfilling the tank. Overfilling could also cause damage to the emission control systems.
· Avoid spilling gasoline during refueling. In addition to causing damage to the environment, gasolines containing alcohol can cause damage to painted surfaces, which may not be covered under the New Vehicle Limited Warranty.
· Do not use gasolines containing methanol (methyl alcohol, wood alcohol). This practice can result in vehicle performance deterioration and can damage critical parts in the fuel system. Such damage may not be covered under the New Vehicle Limited Warranty.

**** If the fuel filler cap is not closed tightly or if the engine is running when the car is refueled, the Check Engine Light (Malfunction Indicator Lamp) may indicate a fault. However, your vehicle's performance will not be affected. Use only Volvo original or approved fuel filler caps.***

pg. 66 Starting the engine

Starting the engine

1. Fasten the seat belt.

WARNING!

Before starting, check that the seat, steering wheel and mirrors are adjusted properly. Make sure the brake pedal can be depressed completely. Adjust the seat if necessary. See page 48.

2. Apply the parking brake, if not already set. The gear selector is locked in the (**P**)ark position **(SHIFTLOCK).**

3. Without touching the accelerator pedal, turn the ignition key* to the starting position. Allow the starter to operate for up to 5 seconds (turbo: 10 seconds). Release the key as soon as the engine starts. If the engine fails to start, repeat this step.

For cold starts at altitudes above 6000 ft (1800 meters), depress the accelerator pedal halfway and turn the key to the starting position. Release the pedal slowly when the engine starts.

4. To release the gear selector from the (P)ark position, the engine must be running (or the ignition key must be in position II) and the brake pedal must be depressed.

5. Select the desired gear. The gear engages after a very slight delay which is especially noticeable when selecting R.

NOTE:
· Your car is equipped with a **KEYLOCK** system. When the engine is switched off, the gear selector must be in the (**P**)ark position before the key can be removed from the ignition switch.
· When starting in cold weather, the transmission may shift up at slightly higher engine speeds than normal until the automatic transmission fluid reaches normal operating temperature.

CAUTION:
· The engine should be idling when you move the gear selector. Never accelerate until after you feel the transmission engage! Accelerating immediately after selecting a gear will cause harsh gear engagement and premature transmission wear.
· Selecting P or N when idling at a standstill for prolonged periods of time will help prevent overheating of the automatic transmission fluid.
· Do not race a cold engine immediately after starting. Oil flow may not reach some lubrication points fast enough to prevent engine damage.

WARNING!

· Always place the gear selector in Park and apply the parking brake before leaving the vehicle. Never leave the car unattended with the engine running.
· Always open the garage doors fully before starting the engine inside a garage to ensure adequate ventilation. The exhaust gases contain carbon monoxide, which is invisible and odorless but very poisonous.

* Your car is equipped with an electronic start inhibitor (immobilizer). The keys you received with your car are specially coded. The code in the key is transmitted to an antenna in the ignition switch where it is compared to the code stored in the start inhibitor module. The car can only be started if a properly coded key is used.

If two of the keys to your car are close together, e.g., on the same key ring, when you try to start the car, this could cause interference in the immobilizer system and result in the car not starting. If this should occur, remove one of the keys from the key ring before trying to start the car again.

pg. 67 Automatic transmission AW5

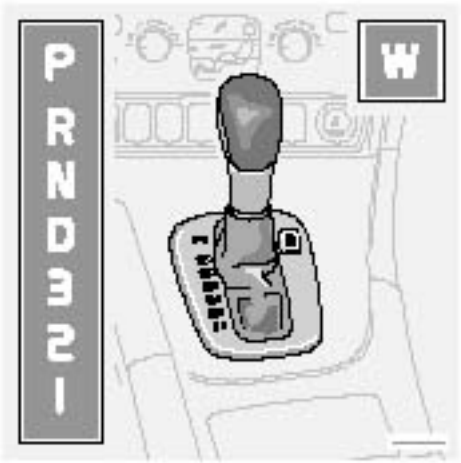

P (Park)

Use this position when starting the engine or parking the car.

Never use P while the car is in motion.

The parking brake should also be set whenever the car is parked.

The gear selector is mechanically locked in the P position (SHIFTLOCK). To release the gear

selector from this position, the engine must be running (or the ignition key must be in position II) and the brake pedal must be depressed.

WARNING!

Never leave the car unattended when the engine is running. If, by mistake, the gear selector is moved from P, the car may start moving.

R (Reverse)

Never engage R while the car is moving forward.

N (Neutral)

Neutral - no gear engaged. Use the parking brake.

D (Drive)

D is the normal driving position and should be used as often as possible to help improve fuel economy. The car should not be moving when shifting from R to the D position.

3 (Intermediate gear)

The transmission will shift automatically between gears 3, 2 or 1 from this position. **The transmission cannot shift up to (D)rive (D) from third gear.**

2 (Intermediate gear)

The transmission will shift automatically between gears 2 and 1 from this position. **The transmission cannot shift up to third gear from second gear.**

1 (Low gear)

If you select this gear at speeds above 30 mph (50 km/h), the transmission will first shift to second gear and then to first gear at lower speeds.

NOTE: The intermediate and low gears can be used for:
· Driving in a mountainous area
· Towing a trailer
· Increasing the braking effect of the engine.

· The transmission has a built-in limiter designed to help prevent excessive engine speeds (high rpm) when gears 3,2 or 1 are selected.

Kickdown

Automatic shift to a lower gear (kickdown) is achieved by depressing the accelerator pedal fully and briskly. An upshift will occur when approaching the top speed for a particular gear or by releasing the accelerator pedal slightly. Kickdown can be used for maximum accelera-tion or when passing at highway speeds.

Automatic transmission - adaptive system

The automatic transmission is controlled by an adaptive guidance system that constantly monitors the way in which the transmission functions. It senses and adapts each gear shift for optimal performance. The system also monitors your particular driving style and adapts gear shifting accordingly.

pg. 68 Automatic transmission AW5

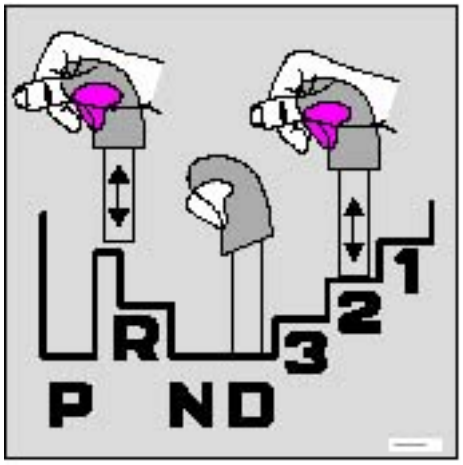

Automatic transmission - shift gate positions

The gear selector can be moved freely between N and D.

Depressing the selector knob enables you to move the gear selector to positions P, R, N, D, 3, 2 and 1.

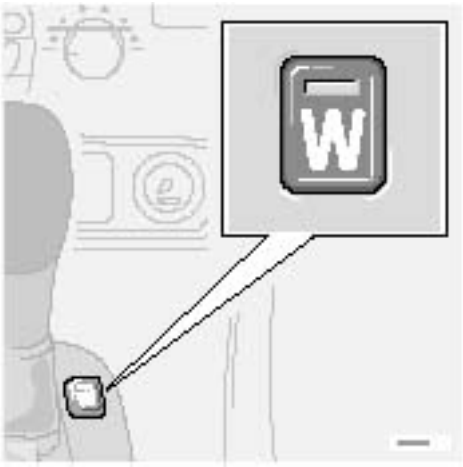

W Winter/Wet driving mode - enhanced vehicle traction

· Mode W will only function if the gear selector is in the (D)rive position.
· Press the button at the base of the gear selector to engage/disengage this driving mode (see illustration).
· An LED in the button will light up to indicate that **W** is engaged and this will also be displayed in the instrument panel (see page 23).
· This mode may be selected for starting/moving off on slippery roads.

pg. 69 Automatic transmission (Geartronic)

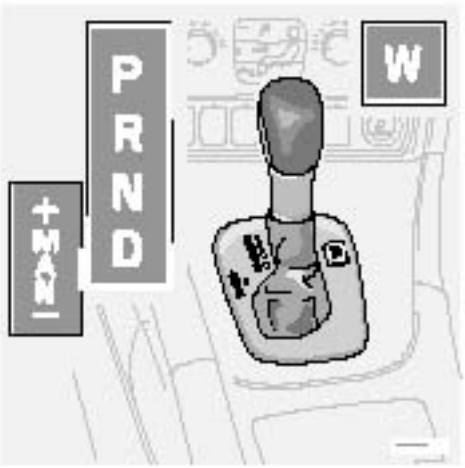

P (Park)

Use this position when starting the engine or parking the car.

Never use P while the car is in motion.

The parking brake should also be used when parking on grades.

The gear selector is mechanically locked in the P position (SHIFTLOCK). To release the gear selector from this position, the engine must be running (or the ignition key must be in position II) and the brake pedal must be depressed.

WARNING!

Never leave the car unattended when the engine is running. If, by mistake, the gear selector is moved from P, the car may start moving.

R (Reverse)

Never engage R while the car is moving forward.

N (Neutral)

Neutral - no gear engaged. Use the parking brake.

D (Drive)

D is the normal driving position and should be used as often as possible to help improve fuel economy. The car should not be moving when shifting from R to the D position.

Kickdown

Automatic shift to a lower gear (kickdown) is achieved by depressing the accelerator pedal fully and briskly. An upshift will occur when approaching the top speed for a particular gear or by releasing the accelerator pedal slightly.
Kickdown can be used for maximum acceleration or when passing at highway speeds. **Kickdown does not function when the transmission is in the manual shift (geartronic) mode (see next page).**

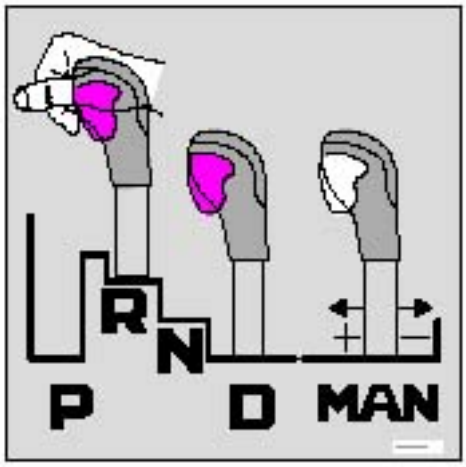

Shift gate positions

Shift gate positions

Automatic transmission - adaptive system

The automatic transmission is controlled by an adaptive control system that constantly monitors the way in which the transmission functions. It senses and adapts each gear shift for optimal performance. The system also monitors your particular driving style and adapts gear shifting accordingly.

Automatic transmission - shift gate positions

You can move the gear selector freely between the **(MAN)**ual and **(D)**rive positions while driving.

Depress the selector knob on the front side of the gear selector to move between the R, N, D and P positions.

Please see the following page for information on using the Geartronic manual shift mode.

pg. 70 Automatic transmission (Geartronic)

Manual shifting - Geartronic

You can move the gear selector freely between the **(MAN)**ual and **(D)**rive positions while driving. Gears 2, 3, and 4 have a "lock-up" function which reduces engine speed and helps save fuel.

The currently selected gear will be displayed in the instrument panel (see page 23).

· To access the (MAN)ual shifting position from (D)rive, pull the gear selector back slightly from D and move it to the left to MAN.
· To return to the (D)rive position from MAN, move the gear selector to the right and push it forward to

the (D)rive position.

While driving

If you select the (MAN)ual position while driving, the gear that was being used in the (D)rive position will also initially be selected in (MAN)ual position.
· Move the gear selector forward (toward "+") to shift to a higher gear or rearward (toward "-") to shift to a lower gear.
· If you hold the gear selector toward "-", the transmission will downshift, one gear at a time, and will utilize the braking power of the engine. If the current speed is too high for using a lower gear, the downshift will not occur until the speed has decreased enough to allow the lower gear to be used.
· If you slow down to a very low speed, the transmission will automatically shift down.
· When starting in the (MAN)ual position, 3rd gear is the highest gear that may be selected.

NOTE: Kickdown (see previous page) **does not function** when the transmission is in the manual shift (geartronic) mode.

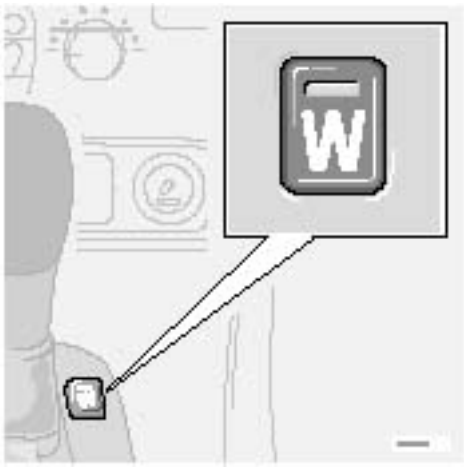

W Winter/Wet driving mode - enhanced vehicle traction

· Mode W will only function if the gear selector is in the (D)rive position.
· Press the button at the base of the gear selector to engage/disengage this driving mode (see illustration).
· An LED in the button will light up to indicate that **W** is engaged and this will also be displayed in the instrument panel (see page 23).
· This mode may be selected for starting/moving off on slippery roads.

pg. 71 Driving economy

Economical driving conserves natural resources

Better driving economy may be obtained by thinking ahead, avoiding rapid starts and stops and

adjusting the speed of your vehicle to immediate traffic conditions. Observe the following rules:
· Bring the engine to normal operating temperature as soon as possible by driving with a light foot on the accelerator pedal for the first few minutes of operation. A cold engine uses more fuel and is subject to increased wear.
· Whenever possible, avoid using the car for driving short distances. This does not allow the engine to reach normal operating temperature.
· Drive carefully and avoid rapid acceleration and hard braking.
· Do not exceed posted speed limits.
· Avoid carrying unnecessary items (extra load) in the car.
· Maintan correct tire pressure. Check tire pressure regularly (when tires are cold).
· Remove snow tires when threat of snow or ice has ended.
· Note that roof racks, ski racks, etc., increase air resistance and also fuel consumption.
· Avoid using automatic transmission kickdown feature unless necessary.
· However, at higher driving speeds, fuel consumption will be lower with the air conditioning on and the windows closed than with the air conditioning off and the windows open.
· Using the onboard trip computer's fuel consumption modes can help you learn how to drive more economically.

Other factors which decrease gas mileage are:

· Worn or dirty spark plugs
· Incorrect spark plug gap
· Dirty air cleaner
· Dirty engine oil and clogged oil filter
· Dragging brakes
· Incorrect front end alignment

Some of the above mentioned items and others are checked at the standard Maintenance Service intervals.

NOTE: Vehicles equipped with automatic transmissions should use (D)rive as often as possible and avoid using "kickdown" to help improve fuel economy.

Cooling system

The risk for engine overheating is greatest, especially in hot weather, when:
· Towing a trailer up steep inclines for prolonged periods at wide open throttle and low engine rpm.
· Stopping the engine suddenly after high speed driving (so-called "after-boiling" can occur).
· To avoid overheating, the following rules should be followed: Do not drive for prolonged periods at engine speeds above 4500 rpm if you are towing a trailer in hilly terrain.
· Reduce speed when towing a trailer up long, steep inclines. The risk of overheat-ing can be reduced by switching off the air conditioning system for a short time.

· Do not let the engine idle unnecessarily for prolonged periods.
· Do not mount auxiliary lamps in front of the grill. When the risk of overheating is imminent, or in the event of overheating (the temperature gauge goes repeatedly into, or stays continual-ly in, the red section), the following precau-tions should be taken:
· Switch off the air conditioning system.
· Pull off the road, away from traffic, stop the car and put the gear selector into Park. **Do not stop the engine!**
· Switch the heater to full (maximum) position. Increase the engine speed to approx. 2000 rpm (twice idling speed) until the temperature begins to drop.
· If the warning light in the center of the instrument panel is red, and the message "Coolant level lo stop engine" is displayed, switch off the engine as soon as possible.

WARNING!
Do not remove coolant expansion tank cap. The coolant will be extremely hot.

If necessary, see See page 110 for information on checking and topping-up the coolant level.

Contents | Top of Page

2 0 0 1
VOLVO
S80

pg. 72 Points to remember

Speed-sensitive power steering (turbo models)

(Optional on models equipped with the 2.9 liter normally-aspirated engine) With this feature, the steering is most respon-sive at lower speeds to make parking, driving in city traffic, etc., easier. The effect of the power steering diminishes as you accelerate for greater stability at highway speeds.

Weight distribution affects handling

At the specified curb weight your car has a tendency to understeer, which means that the

steering wheel has to be turned more than might seem appropriate for the curvature of a bend. This ensures good stability and reduces the risk of rear wheel skid. Remember that these properties can alter with the vehicle load. The heavier the load in the trunk (max. 220 lbs, 100 kg), the less the tendency to understeer.

Handling, roadholding

Vehicle load, tire design and inflation pressure all affect vehicle handling. Therefore, check that the tires are inflated to the recommended pressure according to the vehicle load. See "Tire pressure" section.

Loads should be distributed so that capacity weight or maximum permissible axle loads are not exceeded.

CAUTION:

Drive slowly and carefully if going through standing water (i.e. flooded roadways, etc.). Damage to the engine could result if excess water is drawn in through the air intake system. Never drive the vehicle in water deeper than 1 foot (300 mm). See the flood warning on page 7.

WARNING!

· **Driving with the trunk open:** Driving with the trunk open could lead to poisonous exhaust gases entering the passenger compartment.
If the trunk must be kept open for any reason, proceed as follows:

- Close the windows.

- Set the ventilation system control to air flow to floor, windshield and side windows and blower control to its highest setting.
· **Tires:** It is recommended that tires of the same make and dimensions be used on all four wheels (including the use of snow tires). Do not use bias ply tires as this will adversely alter vehicle handling characteristics. Maintain correct tire pressure.
· **Floor mats:** An extra mat on the driver's floor can cause the accelerator pedal to catch. Check that the movement of the accelerator pedal is not impeded. No more than one protective floor covering may be used at one time.

Electrical system

When replacing the battery or when carrying out work involving the electrical system, the

following should be observed:

· A battery connection to the wrong terminal will damage the electrical system. Be sure to connect the positive battery cable to the positive battery terminal and the negative battery cable to the negative battery terminal.
· If booster batteries are used for starting, they must be properly connected to minimize the risk of the electrical system being damaged. For correct connection, see "Jump starting" section.
· Never disconnect the battery circuit (for example, to replace the battery) while the engine is running, as this may damage the generator. Always make sure that all the battery connections are properly cleaned and tightened.
· If any electrical welding work is performed on the vehicle, the battery's ground lead (negative cable) and all the connecting cables of the generator must be disconnected and the welder cables placed as near the welding points as possible.
· The radio must be turned off before the battery is disconnected.
· Switch off the ignition for at least 10 minutes before disconnecting the battery.

pg. 73 Roof racks/Load carriers

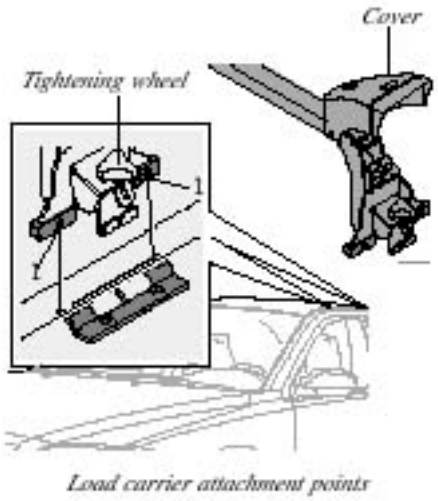

Attaching carriers (models without rails)

The attachment brackets for the load carriers are located under the roof molding.
1 Make sure that the load carriers are placed in the right direction. See the mark on the decal under the cover.
2 Press the guide lugs into the holes (1).
3 Carefully lower the opposite side of the load carrier to the roof.
4 Loosen the tightening wheel slightly. Slide the hook on the load carrier attach-ment into the attachment bracket under the roof molding.
5 Turn the tightening wheel to secure the load carrier in the attachment bracket.
6 Repeat this procedure for the other load carrier attachments.
7 Check that the hooks on all four load carrier attachments are securely tightened in the respective attachment brackets on the roof of the car.
8 Press down the covers
. **Check periodically that the load carriers and load are properly secured.**

Load carriers(accessory)
Load carriers are available as Volvo accesso-ries. Observe the following points when in use:
· To avoid damaging your car and to achieve maximum safety when driving, we recommend using the load carriers that Volvo has developed especially for your car.
· The maximum weight that may be loaded on the roof is 220 lbs (100 kg), including load carriers.
· Avoid single-point loads. Distribute loads evenly.
· Place heavier cargo at the bottom of the load.
· Secure the cargo correctly with appropriate tie-down equipment.
· **Check periodically that the load carriers are properly secured.**
· Remember that the car's center of gravity and handling change when you carry a load on the roof.
· The car's wind resistance and fuel consumption will increase with the size of the load.
· Drive smoothly. Avoid rapid starts, fast cornering and hard braking.

pg. 74 Emergency towing

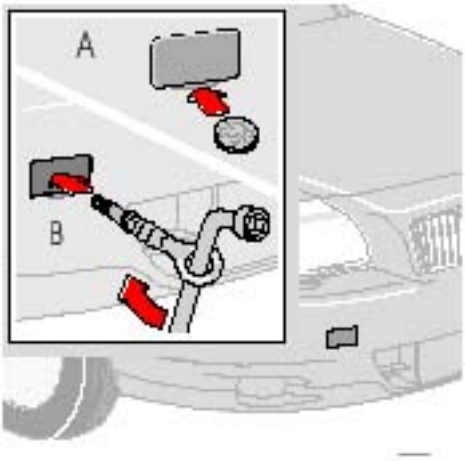

Front towing eyelet

Emergency towing

The towing eyelet is located in the tool bag, under the floor of the trunk, with the spare tire. This eyelet must be screwed into the positions provided on the right sides of either the front or rear bumper (see illustration). To attach the towing eyelet:
· Use a coin to pry open the lower edge of the cover (A).
· Screw the towing eyelet in place, first by hand and then using the tire iron (B) until it is securely in place.

After the car has been towed, the eyelet should be removed and returned to the tool bag. Press the cover back into position.

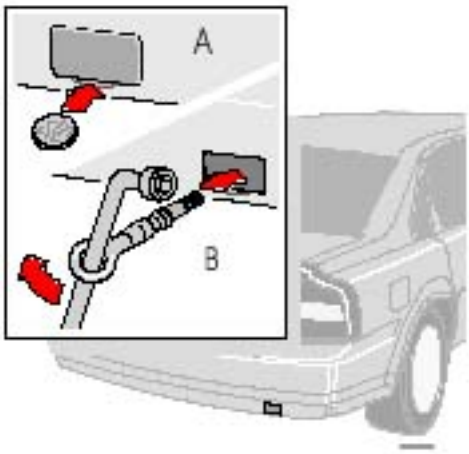

Rear towing eyelet

Precautions when the car is in tow

· The steering wheel must be unlocked. Turn the ignition key to position I or II.

· The gear selector must be in position N.
· Maximum speed: AW5 and GM: 50 mph (80km/h)
· Maximum speed: 50 mph (80 km/h)
· While the car is being towed, try to keep the tow rope taut at all times.
· The cars should only be towed in forward direction.

CAUTION:
· Please check with state and local authorities before attempting this type of towing, as vehicles being towed are subject to regulations regarding maximum towing speed, length and type of towing device, lighting, etc.
· If the car's battery is dead, do not attempt to start the vehicle by pushing or pulling it as this will damage the three-way catalytic converter(s). The engine must be jump started using an auxiliary battery (see see page 79).
· If the car is being towed on a flat bed truck, the towing eyelets must not be used to secure the car on the flat bed. Consult the tow truck operator.

WARNING!

· Remember that the power brakes and power steering will not function when engine is not running. The braking and steering systems will function but the brake pedal pressure required is 3 - 4 times above normal and greater steering effort must be exerted.
· The towing eyelets must not be used for pulling another vehicle out of a ditch or for any similar purpose involving severe strain.
· Do not use the towing eyelets to pull the car up onto a flat bed tow truck.

pg. 75 Vehicle towing information

Towing cars with front wheel drive

Volvo recommends the use of flat bed equipment.

If wheel lift equipment must be used, please use extreme caution to help avoid damage to the car. **In this case, the car should be towed with the rear wheels on the ground if at all possible.**

If it is absolutely necessary to tow the vehicle with the front wheels on the ground, please refer to the towing information on the previous page.

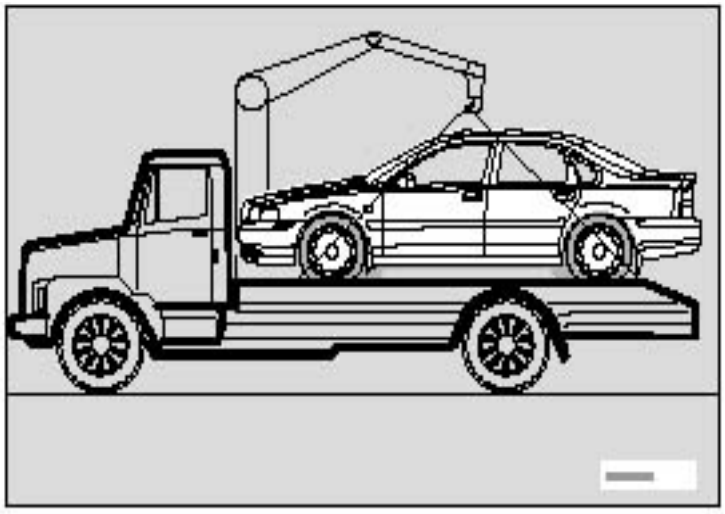

CAUTION:
· Sling-type equipment applied at the front will damage radiator and air conditioning lines.
· It is equally important not to use sling-type equipment at the rear or apply lifting equipment inside the rear wheels; serious damage to the rear axle may result.
· If the car is being towed on a flat bed truck, the towing eyelets must not be used to secure the car on the flat bed. Consult the tow truck operator.

· Do not use the towing eyelets to pull the car up onto a flat bed tow truck.

pg. 76 Towing a trailer

When preparing for trailer towing, observe the following:

Volvo recommends the use of Volvo trailer hitches which are specially designed for the car.
· Maximum trailer weight recommended by Volvo is:

Trailers without brakes: 1100 lbs (500 kg)

Trailers with brakes: 2" (50 mm) ball - 3300 lbs (1,500 kg), 1 7/8" (47 mm) ball - 2000 lbs (908 kg).

Observe the legal requirements of the state/province in which the vehicles are registered.
· All Volvo models are equipped with energy-absorbing shock-mounted bumpers. Trailer hitch installation should not interfere with the proper operation of this bumper system.

Trailer towing does not normally present any particular problems, but take into consideration:
· Increase tire pressure to recommended full. See section "Wheels and tires".

· When your car is new, avoid towing heavy trailers during the first 620 miles (1000 km).
· Recommended hitch tongue load is:
Trailer weights **below** 2,650 lbs (1,200 kg) - 110 lbs (50 kg)
Trailer weights **above** 2,650 lbs (1,200 kg) - 165 lbs (75 kg)
· Maximum speed when towing a trailer: 50 mph (80 km/h).
· Engine and transmission are subject to increased loads. Therefore, engine coolant temperature should be closely watched when driving in hot climates or hilly terrain. Use a lower gear and turn off the air conditioner if the temperature gauge pointer enters the red range.
· If the automatic transmission begins to overheat, a message will be displayed in the text window.
· Avoid overload and other abusive operation.
· Hauling a trailer affects handling, durability, and economy.
· It is necessary to balance trailer brakes with the towing vehicle brakes to provide a safe stop (check and observe state/local regulations).
· Do not connect the trailer's brake system directly to the vehicle's brake system.
· More frequent vehicle maintenance is required.
· Remove the ball and drawbar assembly when the hitch is not being used.
· Volvo recommends the use of synthetic engine oil when towing a trailer over long distances or in mountainous areas.

WARNING!

· Bumperattached trailer hitches must not be used on Volvos, nor should safety chains be attached to the bumper.
· Trailer hitches attaching to the vehicle rear axle must not be used.
· Never connect a trailer's hydraulic brake system directly to the vehicle brake system, nor a trailer's lighting system directly to the vehicle lighting system. Consult your nearest authorized Volvo retailer for correct installation.
· When towing a trailer, the trailer's safety wire must be correctly fastened to the hole or hook provided in the trailer hitch on the car. The safety wire should never be fastened to or wound around the drawbar ball.

NOTE:
· When parking the car with a trailer on a hill, apply the parking brake **before** putting the gear selector in (P)ark. When starting on a hill, put the gear selector in (D)rive **before** releasing the parking brake.
· If you use the manual (Geartronic) shift positions while towing a trailer, make sure the gear you select does not put too much strain on the engine (using too high gears).
· The drawbar assembly/trailer hitch may be rated for trailers heavier than the car is designed to tow. Please adhere to Volvo's recom-mended trailer weights.

pg. 77 Detachable trailer hitch - installing

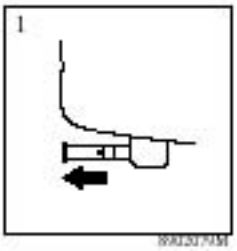

Remove the protective cover.

Insert the key and turn it clockwise to the unlocked position.

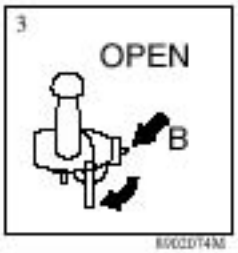

Grasp the ball section and turn the handle clockwise to the locked position.

Push the ball section into the locked position.

Check that the red indicator pin (B) is in the innermost position (not visible).

Turn the key counterclockwise to the locked position. Remove the key.

pg. 78 Jump starting

Insert the key and turn it clockwise to the unlocked position.

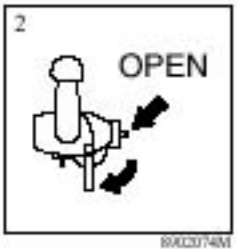

Turn the handle clockwise to the locked position.

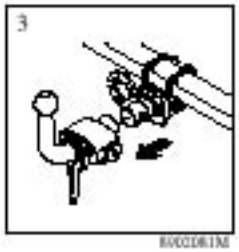

Pull the ball section off the coupling pin.

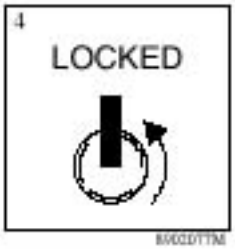

Turn the key counterclockwise to the locked position. Remove the key.

Slide on the protective cover as shown in the illustration.

pg. 79 Jump starting

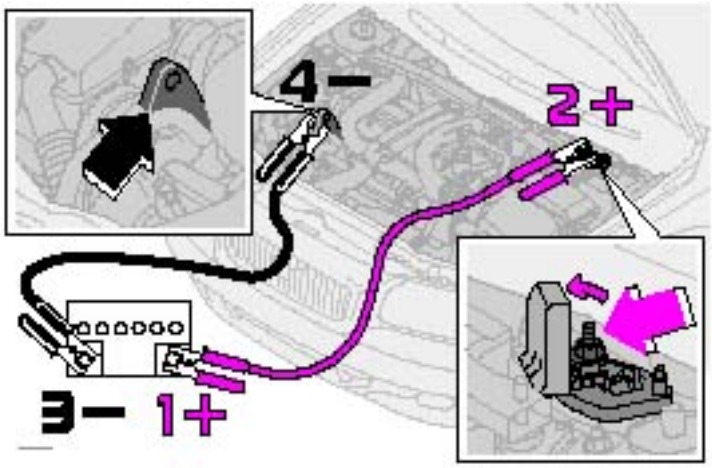

Jump starting

Follow these instructions to jump start your car's dead battery or to jump start another car's dead battery using your car. Although your car's battery is located under the floor of the cargo area, jumper cables should be connected in the **engine compartment** , to the points shown in the illustrations.
If the 12-volt auxiliary battery to be used is in another car, check that the cars are not touching to prevent premature completion of a circuit. Be sure to follow jump starting instructions provided for the other vehicle.

To jump start your car:

· Switch off the ignition.
· First connect the auxiliary battery's positive (+) terminal (1) to the positive (+) terminal in your car's engine compartment (2).
· Then connect the auxiliary battery's negative (-) terminal (3) to the ground point in your car's engine compartment (4). Start the engine in the assisting car, then start the engine in the car with dead battery.
· After the engine has started, first remove the negative (-) terminal jumper cable. Then remove the

positive (+) terminal jumper cable.

CAUTION:

Improper hookup of jumper cables or use of other than 12-volt batteries will result in damage to equipment and/or the battery..

WARNING!

· Do not connect the jumper cable to any part of the fuel system or to any moving parts. Avoid touching hot manifolds.
· Never expose the battery to open flame or electric spark.
· Do not smoke near the battery.
· Batteries generate hydrogen gas which is flammable and explosive.
· Battery fluid contains sulfuric acid. Do not allow battery fluid to contact eyes, skin, fabrics or painted surfaces. If contact occurs, flush the affected area immediately with water. Obtain medical help immediately if eyes are affected.

Failure to follow the instructions for jump starting can lead to personal injury.

NOTE: Refer to pages 117-118 for information on properly maintaining the battery.

PROPOSITION 65WARNING!
Battery posts, terminals, and related accessories contain lead and lead compounds, chemicals known to the state of California to cause cancer and reproductive harm. Wash hands after handling.

pg. 80 Winter driving

Cold weather precautions

If you wish to check your car before the approach of cold weather, the following advice is worth noting:

· Make sure that the **engine coolant** contains 50 percent antifreeze. This gives protection against freezing down to -31°F
(-35°C). See section "Coolant". **The use of "recycled" antifreeze is not approved by Volvo. Different types of antifreeze may not be mixed.**
· Volvo recommends using only genuine Volvo antifreeze in your car's radiator. Your Volvo retailer stocks plenty of Volvo engine coolant to protect your car during cold weather.

· Try to keep the **fuel tank** well filled - this prevents the formation of condensation in the tank. In addition, in extremely cold weather conditions it is worthwhile to add fuel line de-icer before refueling.
· The viscosity of the engine oil is important. Oil with low viscosity (thinner oil) improves cold-weather starting as well as decreasing fuel consumption while the engine is warming up. For winter use, 5W-30 oil, particularly the synthetic type *, is recommended. Be sure to use good quality oil but do not use this cold-weather oil for hard driving or in warm weather. **See section "Engine oil" for more information.**
· The load placed on **the battery** is greater during the winter since the windshield wipers, lighting, etc. are used more often. Moreover, the capacity of the battery decreases as the temperature drops. In very cold weather, a poorly charged battery can freeze and be damaged. It is therefore advisable to check the state of charge more frequently and spray an anti-rust oil on the battery posts.
· Volvo recommends the use of **snow tires** on all four wheels for winter driving - see section "Wheels and tires".
· To prevent the **washer fluid reservoir** from freezing, add washer solvents containing antifreeze (see page 112 for the location of the washer fluid reservoir). This is important since dirt is often splashed on the windshield during winter driving, requiring the frequent use of the washers and wipers. The Volvo Washer Solvent should be diluted as follows:
Down to 14° F (-10° C): 1 part washer solvent and 4 parts water
Down to 5° F (-15° C): 1 part washer solvent and 3 parts water
Down to 0° F (-18° C): 1 part washer solvent and 2 parts water
Down to -18° F (-28° C): 1 part washer solvent and 1 part water
· Use Volvo Teflon Lock Spray in the locks.

NOTE: Avoid the use of de-icing sprays as they can cause damage to the locks.

W Winter/Wet driving mode - enhanced vehicle traction

· Mode W will only function if the gear selector is in the (D)rive position.
· Press the button at the base of the gear selector to engage/disengage this driving mode (see illustration).
· An LED in the button will light up to indicate that **W** is engaged and this will also be displayed in the instrument panel (see page 23).
· This mode may be selected for starting/moving off on slippery roads.

* Synthetic oil is not used when the oil is changed at the normal maintenance service intervals.

pg. 81 Long distance trips

Before a long distance trip

It is always worthwhile to have your car checked at a Volvo retailer before driving long distances. Your retailer will also be able to supply you with bulbs, fuses, spark plugs and wiper blades for your use in the

event that problems occur.

As a minimum, the following items should be checked before any long trip:

· Check that engine runs smoothly and that fuel consumption is normal.
· Check engine oil, coolant levels, and for possible fuel leakage.
· Check transmission oil level.
· Check condition of drive belts.
· Check state of the battery's charge.
· Examine tires carefully (the spare tire as well), and replace those that are worn. Check tire pressures.
· The brakes, front wheel alignment, and steering gear should be checked by your Volvo retailer only.
· Check all lights, including high beams.
· Reflective warning triangles are legal requirement in some countries.
· Have a word with your Volvo retailer if you intend to drive in countries where it may be difficult to obtain the correct fuel.
· Consider your destination. If you will be driving through an area where snow or ice are likely to occur, consider snow tires.

* To prevent injury from contact with hot surfaces, do not inspect your car's transmission fluid yourself. Have your car's transmission fluid level inspected by a qualified Volvo service technician according to the maintenance schedule on see page 107.

pg. 82 Three-way catalytic converters

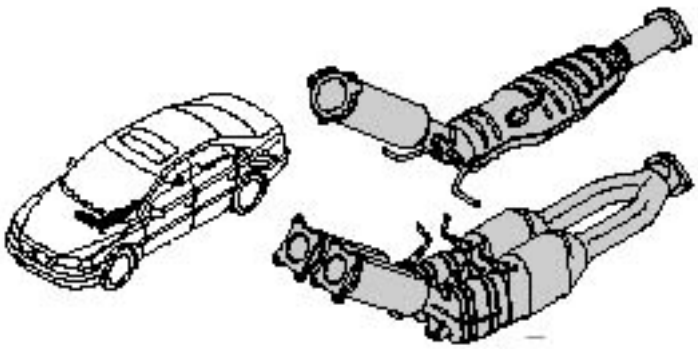

Three-way catalytic converter cautions

· Keep your engine properly tuned. Certain engine malfunctions, particularly involving the electrical, fuel or distributor ignition systems, may cause unusually high three-way catalytic converter temperatures. **Do not continue to operate your vehicle if you detect engine misfire, noticeable loss of power or other unusual operating conditions, such as engine overheating or backfiring.** A properly

tuned engine will help avoid malfunctions that could damage the three-way catalytic converters.
· Do not park your car over combustible materials, such as grass or leaves, which can come into contact with the hot exhaust system and cause such materials to ignite under certain wind and weather conditions.
· Excessive starter cranking (in excess of one minute), with an intermittently firing or flooded engine, can cause three-way catalytic converter or exhaust system overheating.

· Remember that tampering or unauthorized modifications to the engine or the vehicle may be illegal and can cause three-way catalytic converter or exhaust system overheating. This includes:
- Altering fuel injection setting or components.
- Altering emission system components or location or removing components.
- Repeated use of leaded fuel.

NOTE: Unleaded fuel is required for cars with three-way catalytic converters

---

Contents | Top of Page

2 0 0 1
VOLVO
S80

Chapter 7 - Wheels and tires

pg. 83 Wheels and tires

General information, Wear indicator, Tire economy, Flat spots 84

Snow chains, Snow tires/studded tires 85

Inflation pressure, Spare tire 86

Uniform tire quality grading 87

Changing wheels 88

pg. 84 Wheels and tires

General information

Your vehicle is equipped with tires according to the tire information label on the inside of the fuel filler door.

The following is an **example** of a tire designation code: 225/55 R16

225 = tire width in mm.

55 = tire profile. This is the relationship (in percent) between the section height and width of the tire.

R = radial tires.

16 = diameter in inches.

The tires have good road holding characteristics and offer good handling on dry and wet surfaces. It should be noted however that the tires have been developed to give these features on snow/icefree surfaces. **Certain models are equipped with "all-season" tires, which provide a somewhat higher degree of road holding on slippery surfaces than tires without the "all-season" rating.** However, for optimum road holding on icy or snow covered roads **we recommend suitable winter tires on all four wheels.** When replacing tires, be sure that the new tires are the same size designation, type (radial) and preferably from the same manufacturer, on all four wheels. Otherwise there is a risk of altering the car's roadholding and handling characteristics.

NOTE: When storing wheel/tire assemblies (e.g. winter tires and wheels), either stand the assemblies upright, or suspend them off the ground. Laying wheel/tire assemblies on their sides for prolonged periods can cause wheel and/or tire damage.

Wear indicator

The tires have wear indicator strips runnin across or paralle to the tread. When approx. 1/16" (1.6 mm) is left on the tread, these strips become visible and indicate that the tire should be replaced.

Tires with less than 1/16" (1.6 mm) tread have a very poor grip in rain
or snow.

When replacing worn tires, it is recommended that the tire be identical in type (radial) and size as the one being replaced. Using a tire of the same make (manufacturer) will prevent alteration of the driving characteristics of the vehicle.

To improve tire economy:

· Maintain correct tire pressure. See the tire pressure label on the inside of the fuel filler door.
· Drive smoothly: avoid fast starts, hard braking and tire screeching.
· Tire wear increases with speed.
· Correct front wheel alignment is very important.
· Unbalanced wheels impair tire economy and driving comfort.
· Volvo does not recommend rotating the tires. If tires are rotated, they must be kept on the same side of the car so that they revolve in the same direction as before rotation.
· Hitting curbs or potholes can damage the tires and/or wheels permanently.

Flat spots

All tires become warm during use. After cooling, when the vehicle is parked, the tires have a tendency to distort slightly, forming flat spots. These flat spots can cause vibrations similar to the vibrations caused by unbalanced wheels. They do, however, disappear when the tire warms up. The degree to which flat

spots form depends on the type of cord used in the tire. In cold weather, it takes longer for the tire to warm up and consequently longer for the flat spot to disappear.

CAUTION:

The car must not be driven with wheels of different dimensions or with a spare tire other than the one that came with the car. The use of different size wheels can seriously damage your car's transmission.

pg. 85 Wheels and tires

Snow chains

Snow chains can be used on your Volvo with the following restrictions:

· Snow chains should be installed on front wheels only. Use only Volvo approved snow chains.
· Special snow chains must be mounted on 215/55 R16, 225/55 R16 and 225/50 R17 tires. Consult your Volvo retailer.
· If accessory, aftermarket or "custom" tires and wheels are installed and are of a size different than the original tires and wheels, chains in some cases CANNOT be used. Sufficient clearances between chains and brakes, suspension and body components must be maintained.
· Some strapon type chains will interfere with brake components and therefore CANNOT be used.

Consult your Volvo retailer for additional snow chain information.

CAUTION:
· Check local regulations regarding the use of snow chains before installing.
· Always follow the chain manufacturer's installation instructions carefully. Install chains as tightly as possible and retighten periodically.
· Never exceed the chain manufacturer's specified maximum speed limit. (Under no circumstances should that limit be higher than
31 mph (50 km/h).
· Avoid bumps, holes or sharp turns when driving with snow chains.
· The handling of the vehicle can be adversely affected when driving with chains. Avoid fast or sharp turns as well as locked wheel braking.

Snow tires, studded tires *

Tires for winter use:

Owners who live in or regularly commute through areas with sustained periods of snow or icy driving conditions are strongly advised to fit suitable winter tires to help retain the highest degree of traction.

It is important to install winter tires **on all four wheels** to help retain traction during cornering, braking, and accelerating. Failure to do so could reduce traction to an unsafe level or adversely affect handling. Do not mix tires of different design as this could also negatively affect overall tire road grip.

Volvo recommends 215/55 R16 winter tires on all four wheels.

Winter tires wear more quickly on dry roads in warm weather. They should be removed when the winter driving season has ended.

Studded tires should be runin 300600 miles (5001000 km) during which the car should be driven as smoothly as possible to give the studs the opportunity to seat properly in the tires. The tires should have the same rotational direction throughout their entire lifetime. In other words, if you wish to rotate the wheels, make sure that the same wheels are always on the same side of the car.

NOTE: Please consult state or provincial regulations restricting the use of studded winter tires before installing such tires.

* Where permitted.

pg. 86 Wheels and tires

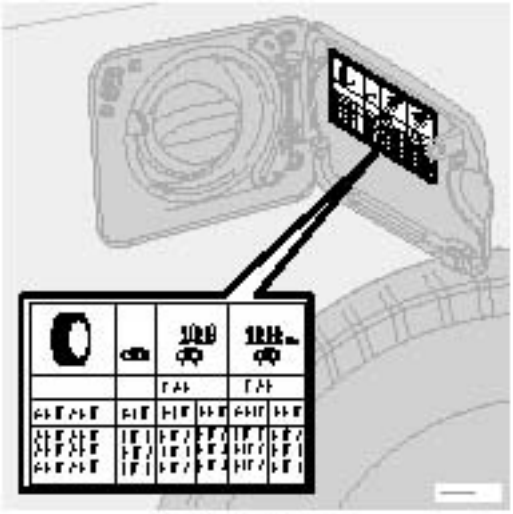

Tire pressure label

Checking and correcting tire pressure

· Check the tire pressure regularly.
· The tire pressure should be corrected only when the tires are cold.
· With warm tires, correct only when the pressure is too low. The tire temperature rises after driving just a few miles.

Vehicle loading

The tires on your Volvo will perform to specifications at all normal loads when inflated as recommended on the tire information label located on the inside of the fuel filler door. This label lists both tire and vehicle design limits.

Do not load your car beyond the load limits indicated.

Temporary Spare (certain models)

The spare tire in your car is called a "Temporary Spare". It has the following designation: T125/80 R17.

Recommended tire pressure (see decal on fuel filler door) should be maintained irrespective of which position on the car the Temporary Spare tire is used on.

In the event of damage to this tire, a new one can be purchased from your Volvo retailer.

WARNING!

Current legislation prohibits the use of the "Temporary Spare" tire other than as a temporary replacement for a punctured tire. In other words, it must be replaced as soon as possible by a standard tire. Road holding and handling may be affected with the "Temporary Spare" in use. Do not exceed 50 mph (80 km/h). Do not drive farther than 50 miles (80 km) on a temporary spare tire.

CAUTION:

The car must not be driven with wheels of different dimensions or with a spare tire other than the one that came with the car. The use of different size wheels can seriously damage your car's transmission.

NOTE: Certain models may be equipped with a full-size spare tire. When used, it should be inflated to the same pressure as the tire it is replacing.

pg. 87 Wheels and tires

Uniform tire quality grading

All passenger car tires must conform to Federal Safety Requirements in addition to these grades

Quality grades can be found, where applicable, on the tire sidewall between the tread should and maximum section width. For example:
Treadwear 200 Traction AA Temperature A

TREADWEAR

The treadwear grade is a comparative rating based on the wear rate of the tire when tested under controlled conditions on a specified government test course. For example, a tire graded 150 would wear one and one half (1 1/2) times as well on the government course as a tire graded 100. The relative performance of tires depends upon the actual conditions of their use, however, and many depart significantly from the norm due to variation in driving habits, service practices and differences in road characteristics and climate.

TRACTION

The traction grades, from highest to lowest, are AA, A, B, and C, as measured under controlled conditions on specified government test surfaces of asphalt and concrete. A tire marked C may have poor traction performance.

WARNING!

The traction grade assigned to this tire is based on braking (straight-ahead) traction tests and does not include cornering (turning) traction.

TEMPERATURE

The temperature grades are AA (the highest), A, B, and C, representing the tire's resistance to the generation of heat and its ability to dissipate heat when tested under controlled conditions on a specified indoor laboratory test wheel. Sustained high temperature can cause the material of the tire to degenerate and reduce tire life, and excessive temperature can lead to sudden tire failure. The grade C corresponds to a minimum level of performance that all passenger car tires must meet under the Federal Motor Safety Standard No. 109. Grades B and A represent higher levels of performance on the laboratory test wheel than the minimum required by law.

WARNING!

The temperature grade for this tire is established for a tire that is properly inflated and not overloaded. Excessive speed, under-inflation, or excessive loading, either separately or in combination, can cause heat buildup and possible tire failure.

pg. 88 Changing wheels

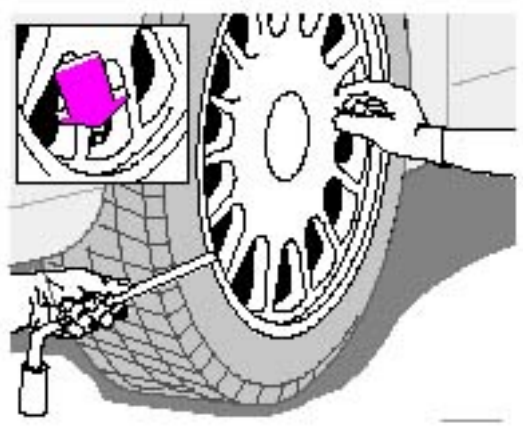

Insert flat end of lug wrench and turn/pull straight out

Changing wheels

The spare wheel is located under the carpet on the trunk floor. The jack and crank are secured in the wheel recess.

There are two jack attachment points on each side of the car.

To change a wheel:

· Engage the parking brake.
· Put the gear selector in (P)ark.
· Remove the wheel cap (where applicable) using the lug wrench in the tool kit.
· With the car still on the ground, use the lug wrench to loosen the wheel bolts 1/2 1 turn. Turn the bolts counterclockwise to loosen.

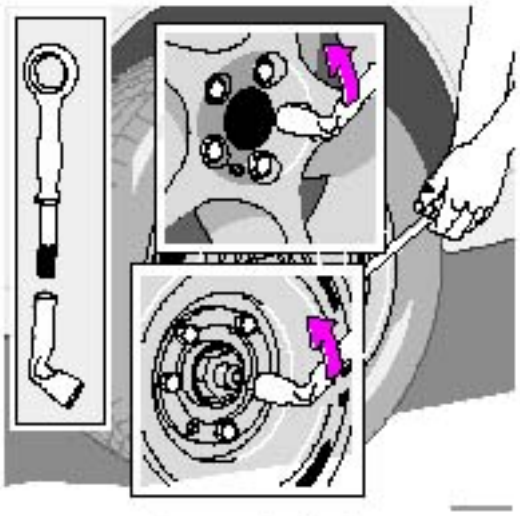

Loosen wheel bolts

· Position the jack on the bar in the attachment (**A** in the illustration in right column) and crank while simultaneously guiding the base of the jack to the ground. **The base of the jack must be flat on a level, firm, non-slippery surface. Before raising the car, check that the jack is still correctly positioned in the attachment.**
· Raise the vehicle until the wheel to be changed is lifted off the ground.
· Unscrew the wheel bolts completely and carefully remove the wheel so as not to damage the thread on the studs.

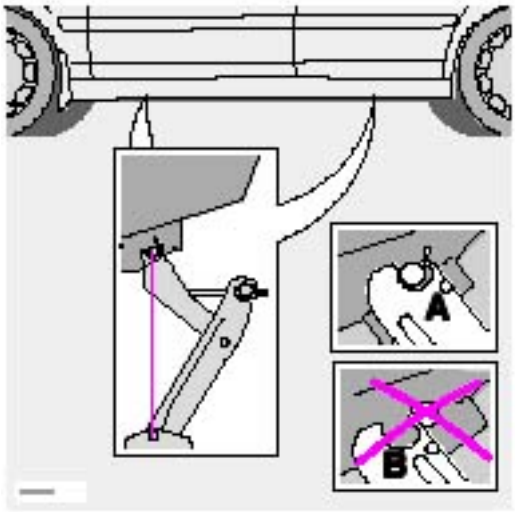

Attaching the jack

NOTE: To avoid excessive wear and the necessity of rebalancing, mark and reinstall wheels in the same location and position as before removal. To lessen the chance of imbalance, each wheel hub is equipped with a guide stud to ensure that a removed wheel can be reinstalled in its original position (as when changing over to winter tires/wheels).

pg. 89 Changing wheels

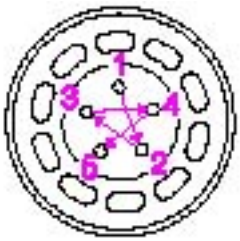

Correct tightening order for wheel bolts

Installing the wheel

· Clean the contact surfaces on the wheel and hub.
· Lift the wheel and place it on the hub. Make sure that you align the wheel with the guide stud on the wheel hub prior to installation.
· Install the wheel bolts and tighten handtight. use the lug wrench, tighten crosswise(see illustration above) until all bolts are snug.
· Lower the vehicle to the ground and alternately tighten the bolts crosswise to 100 ft. lbs. (136 Nm).
· Install the wheel cap (where applicable).

WARNING!

· The jack must correctly engage the bar in the jack attachment (A). The car's weight must not rest on the jack attachment (B). See illustration on page 88.
· Be sure the jack is on a firm, level, non-slippery surface.
· Never allow any part of your body to be extended under a car supported by a jack.
· Use the jack intended for the car when replacing a wheel. For any other job, use stands to support the side of the car being worked on.
· Apply the parking brake and put the gear selector in the (P)ark position.
· Block the wheels standing on the ground, use rigid wooden blocks or large stones.
· The jack should be kept well-greased.

CAUTION:
· The car must not be driven with wheels of different dimensions or with a spare tire other than the one that came with the car. The use of different size wheels can seriously damage your car's transmission.
· Correct tightening torque on wheel bolts must be observed. The wheel bolts should never be greased or lubricated. The extended, chromed wheel bolts must not be used with steel rims, as they make it impossible to fit the hub caps.

pg. 90

Contents | Top of Page

2 0 0 1
VOLVO
S80

Chapter 8 - Maintenance/Servicing

pg.91 Maintenance/Servicing

Fuses 92

Replacing bulbs 96

Paint touch up 103

Washing the car 104

Cleaning the upholstery 105

Maintenance service, Warranty 106

Maintenance schedule 107

Fuel/emissions systems 109

Drive belt, Air pump system, Coolant 110

Servicing 111

Opening the hood, Engine compartment 113

Engine oil 114

Power steering/Brake fluid reservoirs 116

Battery maintenance 117

Replacing wiper blades 119

pg.92 Fuses

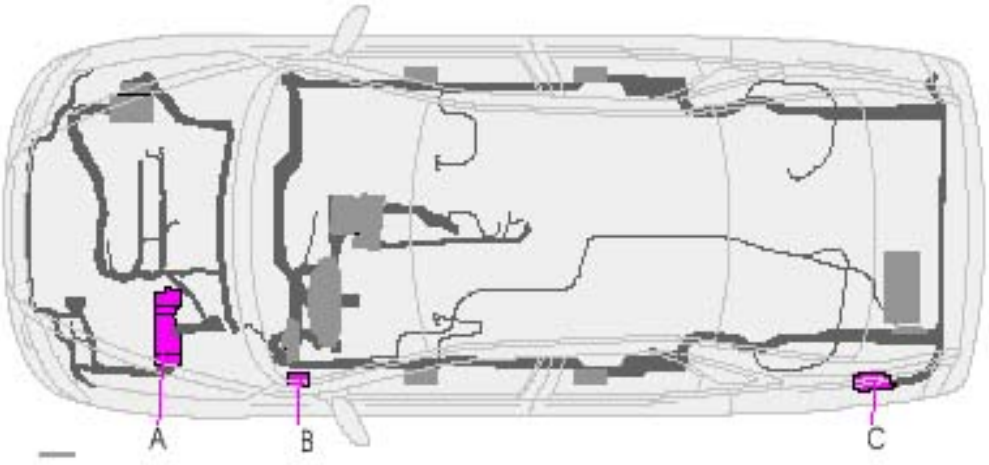

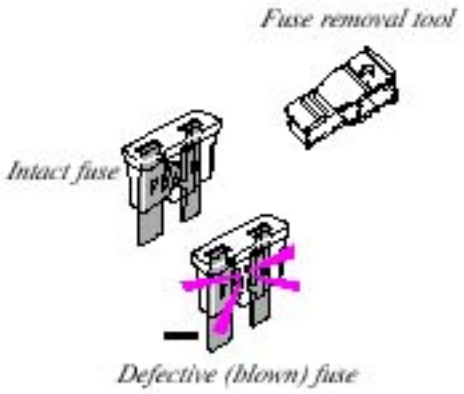

Replacing fuses

If an electrical component fails to function, it is likely that a fuse has blown due to a temporary circuit overload.

The fuse boxes are located in three different places:

A - Relays/fuse box in the engine compartment

B - Fuse box in the passenger compartment

C - Relays/fuse box in the trunk

A label on the inside of each cover indicates the amperage and the electrical components that are connected to each fuse.

The easiest way to see if a fuse is blown is to remove it. Pull the fuse straight out. If a fuse is difficult to remove, you will find a special fuse removal tool in the passenger compartment fuse box. From the side, examine the curved metal wire to see if it is broken. If so, put in a new

fuse of the **same color and amperage** (written on the fuse). Spare fuses are stored in the fuse box in the passenger compartment. If fuses burn out repeatedly, have the electrical system inspected by an authorized Volvo retailer.

pg.93 Fuses in the engine compartment

Relays/fuses in the engine compartment

When replacing fuses, be sure to replace a blown fuse with a new one of the **same color and amperage** (written on the fuse).

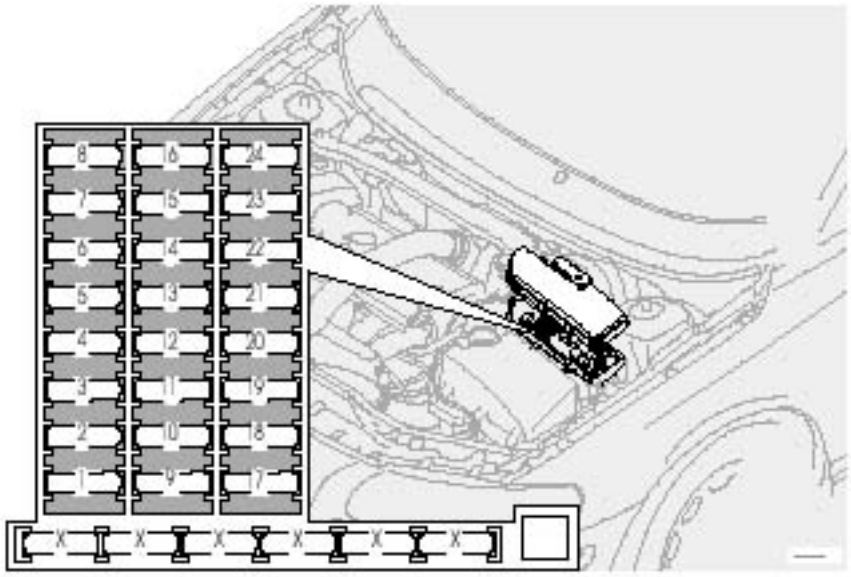

Ordinary fuses

Location	Amperage	
1	Accessories	25A
2	Auxiliary lamps (option)	15A
3	-	
4	Oxygen sensors	20A
5	Crankcase ventilation heater, Solenoid valves	15A
6	Mass airflow sensor, Engine control module, Injectors	15A
7	Throttle module	10A
8	AC compressor, Accelerator pedal position sensor	10A
9	Horn	15A
10	-	
11	AC compressor, Ignition coils	20A
12	Brake light switch	5A
13	Windshield wipers	25A

15	-	
16	A/ Windshield and headlight washers	15A
17	-	
18	-	
19	ABS	30A
20	-	
21	-	
22	Starter motor	25A
23	Engine control module	5A

pg.94 Fuses in the passenger compartment

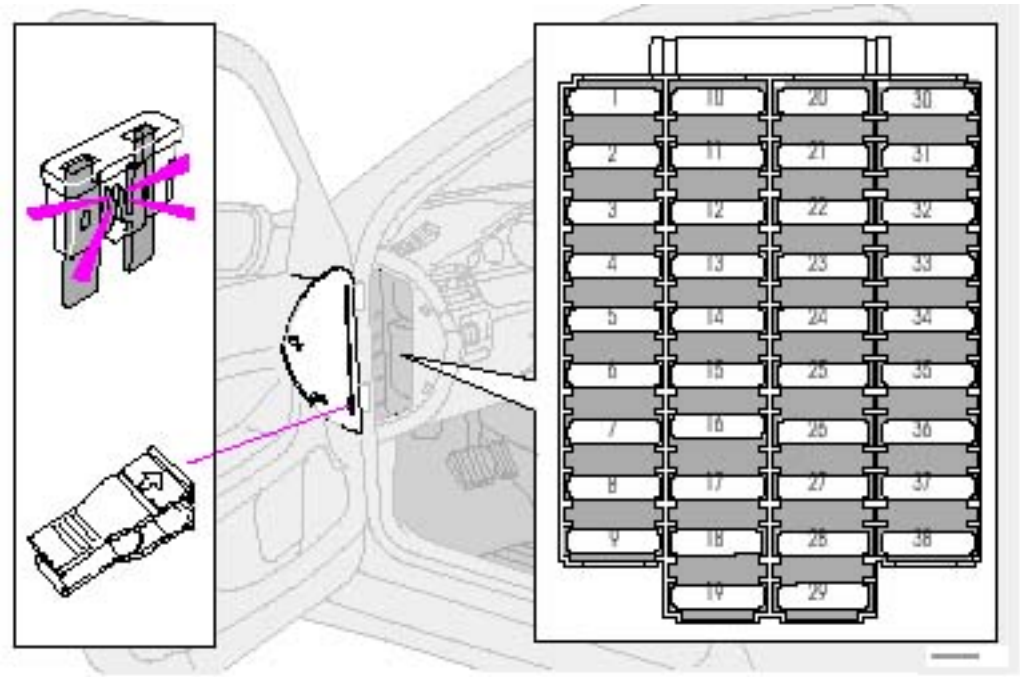

Fuse box in the passenger compartment

This fuse box is located at the far left side of the instrument panel. Extra fuses and the fuse removal tool are also stored here. When replacing a blown fuse, be sure to replace it with a new one of the **same color and amperage** (written on the fuse).

Location		**Amperage**
1	Left low beam	10A
2	Right low beam	10A
3	Front beam headlights	15A

4	High beam headlights	20A
5	Power driver's seat	30A
6	Power passenger's seat	30A
7	Heated front seats - left	15A
8	Heated front seats - right	15A
9	ABS	5A
10	Left high beam	15A
11	Right high beam	15A
12	Headlight wipers	15A
13	Electric socket 12 V	20A
14	Power passenger's seat	5A
15	Audio system	5A
16	Audio system 20A	
17	Radio amplifier	30A
18	Front fog lights	15A
19	VNS display (option)	15A
20	Transport switch	15A
20	Transmission module	10A
22	Direction indicators	20A
23	Headlight switch module, module for electrical connections, climate control system, onboard diagnostic connector , steering wheel lever modules	5A
24	Relay for extended X-feed: climate control system, power driver's seat, text window, shiftlock geartronic	10A
25	Ignition switch, Relay starter motor	10A
26	Control module - climate control blower	30A
27	Central locking system, power windows, defroster, lighting, sideview mirrors, door warning lights, power sideview mirrors	15A
28	Power sun roof, courtesy lights, vanity mirror lights	10A
29	Telephone (option)	10A
30	Left front/rear parking lights	10A
31	Right front/rear parking lights, license plate lights	10A
32	Central electrical module, vanity mirror lighting, interior courtesy lights, power steering	10A
33	Fuel pump	15A
34	Power sun roof	15A

35	Central locking system, power windows - left front	25A
36	Defroster, Lighting, Sideview mirrors, central locking system, power windows - right front	25A
37	Power windows - rear doors, child safety locks	30A
38	Siren alarm	5A

pg.95 Fuses in the trunk

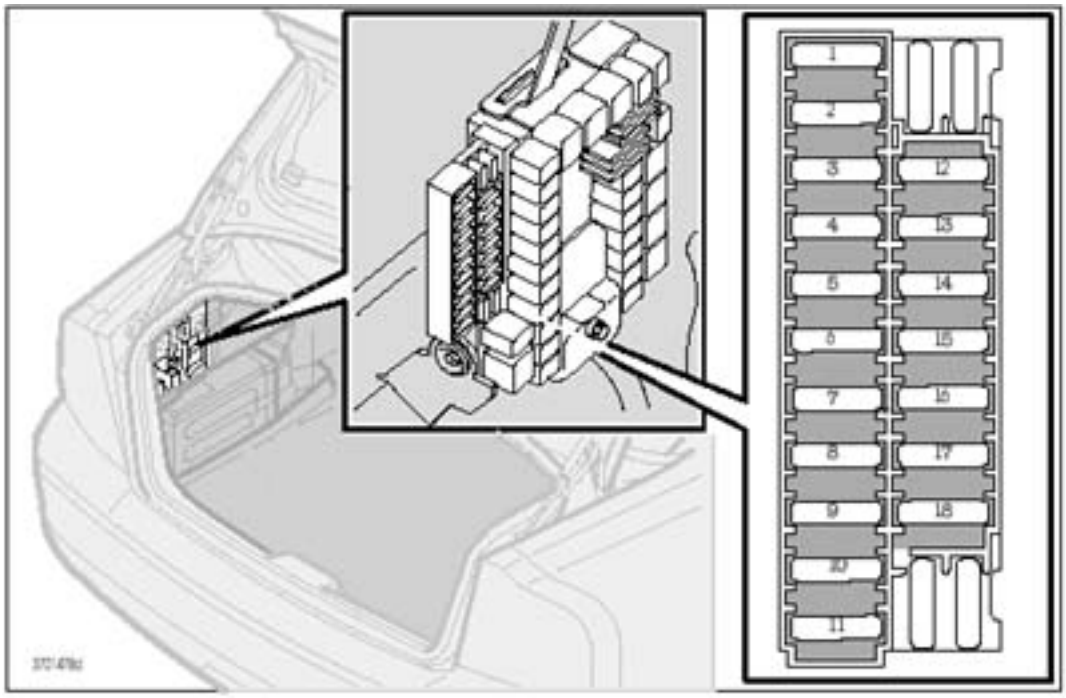

Fuses in the trunk

The fuses in the trunk are located behind the left panel. When replacing a blown fuse, be sure to replace it with a new one of the **same color and amperage** (written on the fuse).

Ordinary fuses

Location		Amperage
1	Rear electrical module, trunk lights	10A
2	Rear fog light	10A
3	Brake lights	15A
4	Backup lights	10A
5	Rear window heater	5A

6	Trunk release	10A
7	Folding rear outboard head restraints	10A
8	Central locking system - rear doors/fuel filler door	15A
9	Traailer (30 supply)	20A
10	CD changer, CD ROM, VNS, antenna	10A
11	-	
12	-	
13	-	
14	-	
15	Trailer (15 supply)	15A
16	-	
17	-	
18	-	

pg.96 Replacing bulbs

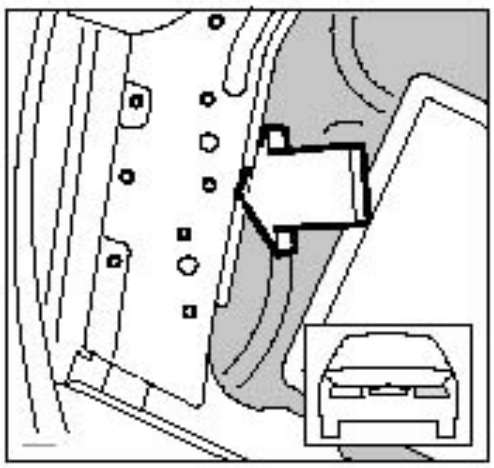

Replacing high/low beam headlight bulbs

The headlight bulbs must be replaced from the engine compartment.

CAUTION:
· Do not touch the glass on halogen bulbs with your fingers. Grease, oil or any other impurities can be carbonized onto the bulb and cause damage to the reflector.

· Be sure to use bulbs of the correct type and voltage.

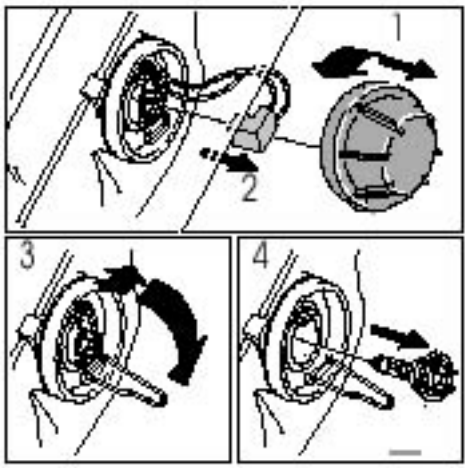

Removing a defective bulb

To remove a defective bulb:

· Switch off the ignition.
· Open the hood.
· Remove the plastic cover over the bulb (1) by turning it counterclockwise.
· Remove the connector (2).
· Loosen the retaining spring (3) by first moving it to the right and then moving it down, out of the way.
· Pull out the defective bulb. Note the position of the guide lug on the base of the bulb (4).

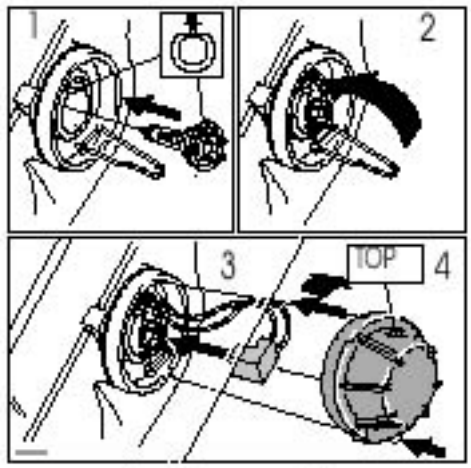

Installing a new bulb

To install a new bulb:

· Insert the new bulb, without touching the glass, with the guide lug upward (1). The bulb will only seat properly in this position.
· Move the retaining spring up and push it slightly to the left until it seats properly (2).
· Press the connector into place on the bulb (3).
· Reinstall the plastic cover and turn it clockwise until it is correctly in place (4). "TOP" must be upward.

NOTE: If the vertical aim of your headlights needs to be adjusted for any reason (e.g., towing a trailer for extended periods), this should be done by an authorized Volvo retailer.

pg.97 Replacing bulbs

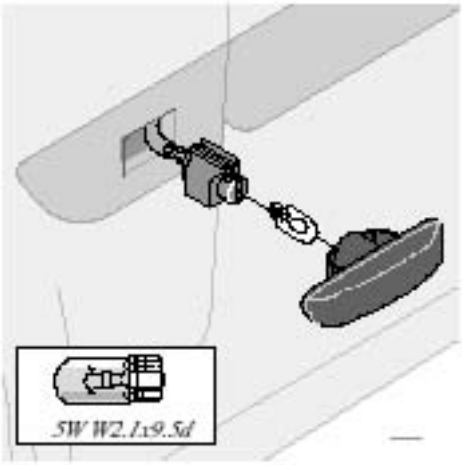

Side direction indicator

· Open the front door halfway.
· From the inside of the fender, push the lamp housing out.
· Turn the bulbs holder 1/4 turn counterclockwise and pull it out from the lens.
· Remove the defective bulb by pulling it straight out.
· Insert a new bulb.
· Reinsert the bulb holder in the lens and press the entire lamp housing back into place on the fender.

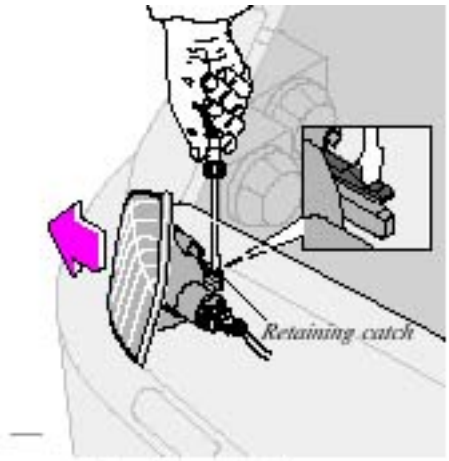

Front direction indicator

Front parking lights/direction indicators

· Switch off the ignition.
· Open the hood.
· Press down the retaining catch with a screwdriver and pull out the lamp housing.
· Press the retaining spring downward and pull the connector out of the lamp housing.
· Turn the bulb holder counterclockwise and remove it.
· Remove the defective bulb from the holder by first pressing it in slightly and then turning it counterclockwise.
· Install a new bulb in the holder and reinsert
the bulb and holder in the lamp housing.

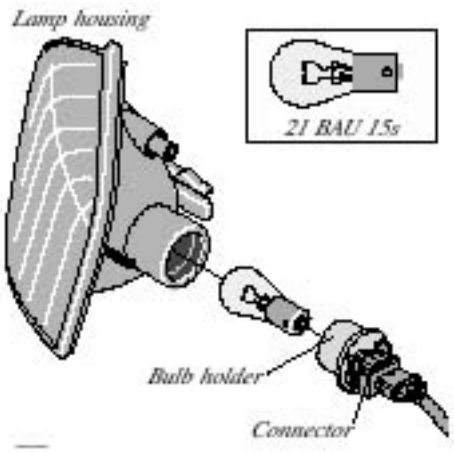

· Press the connector onto the bulb holder.
· Switch on the ignition to test the bulb.
· Press the lamp housing back into place on the fender. Be sure it seats properly.

pg.98 Replacing bulbs

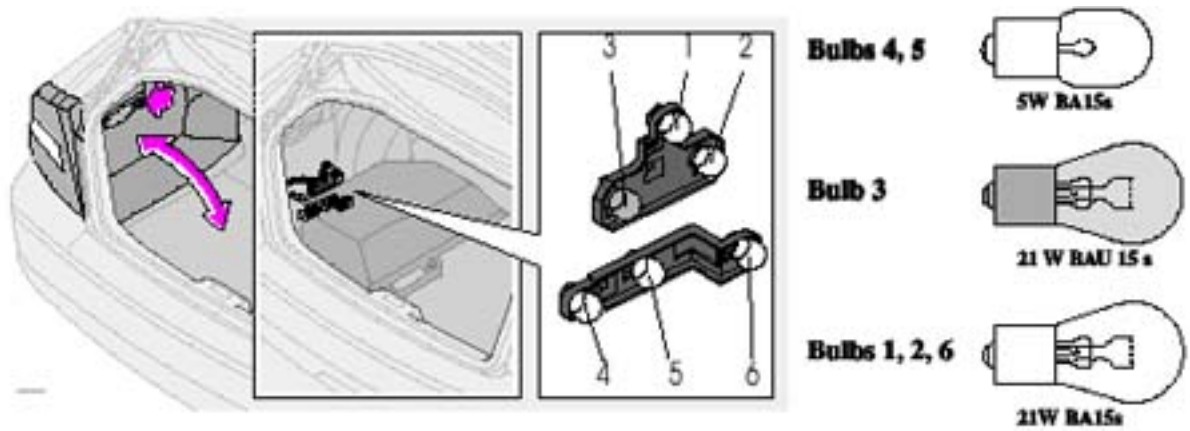

Tail lights

1. Brake light
2. Back-up light
3. Direction indicator
4/5. Tail lights
6. Fog light (left side only)

All tail light bulbs are accessed from inside the trunk.
· Switch off the ignition and open the trunk.
· Fold the covering panel inward to access the bulbs. When replacing right tail light bulbs, access is made easier if you pull out the cargo net in the trunk completely before folding down the panel.

The bulbs are located in upper and a lower holders. . Each holder has a retaining catch.

To replace a bulb in the *upper* holder:

· Disconnect the wiring from the bulb holder.
· Press the retaining catch upward to release the lower part of the holder.
· Press the retaining catch downward to release the upper part of the holder.
· Replace the defective bulb.
· Press the bulb holder back into place.
· Reconnect the wiring.
· Fold up and close the covering panel.

To replace a bulb in the *lower* holder:

· Disconnect the wiring from the bulb holder.
· Press the retaining catch toward the outside of the car to release the holder.
· Replace the defective bulb.
· Press the bulb holder back into place.
· Reconnect the wiring.
· Fold up and close the covering panel.

pg.99 Replacing bulbs

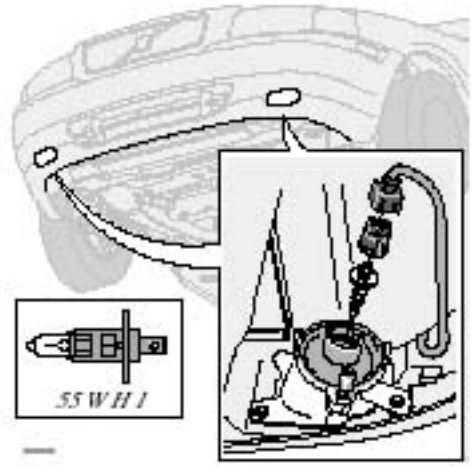

Front fog lights (option)

CAUTION:

Avoid touching the glass on the bulb with your fingers.

· Switch off the ignition.
· Turn the bulb holder slightly counterclockwise to release it.
· Replace the bulb. The shape of the foot of the bulb corresponds to the shape of the bulb holder.
· Reinstall the bulb holder by turning it slightly clockwise. "TOP" on the holder should be upward.

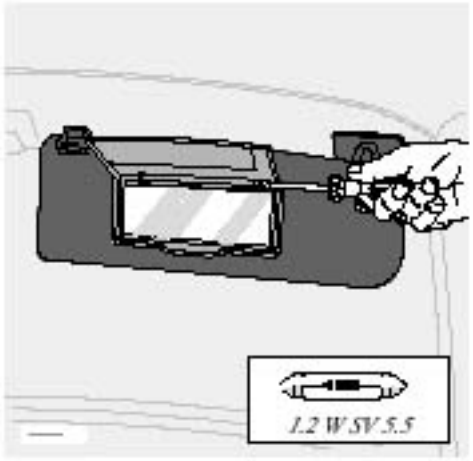

Vanity mirror lights

· Carefully insert a screwdriver and pry out the lens.
· Pry out the bulb and replace it.
· Carefully press the lower edge of lens onto the four tabs and press the upper edge of the lens into place.

pg.100 Replacing bulbs

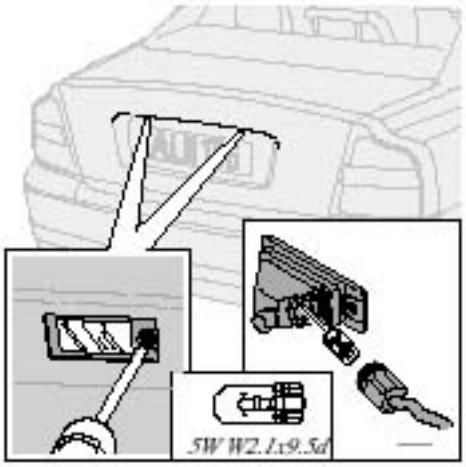

License plate lights

· Switch off the ignition.
· Loosen the screws with a torx screwdriver.
· Carefully pull out the lamp housing.
· Turn the bulb holder counterclockwise and pull it out.
· Pull out the defective bulb and insert a new one.
· Reinsert the bulb holder into the housing and turn it clockwise.
· Reinstall the housing and screw it in place.

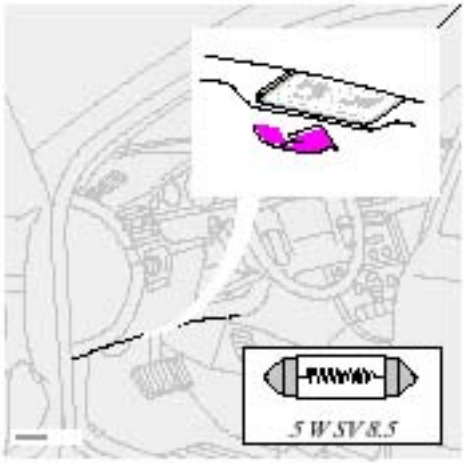

Door step courtesy lights

The door step courtesy lights are located under the dash on the driver's and passenger's sides. To replace a bulb:
· Carefully insert a screwdriver and pry out the lens.

· Replace the defective bulb.
· Reinstall the lens.

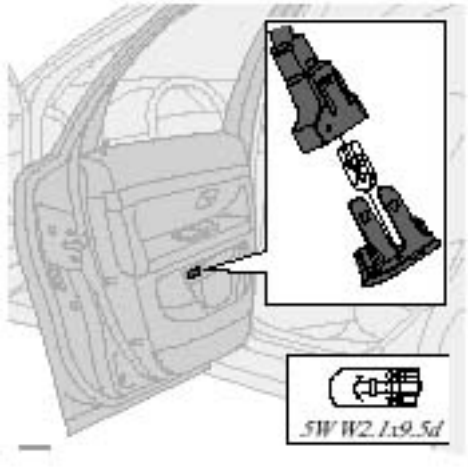

Rear door step lights

· Carefully insert a screwdriver and pry out the lens.
· Disconnect the wiring from the lamp housing.
· Remove the lens from the lamp housing by pressing the two side catches out.
· Pull out the defective bulb and replace it.
· Reinstall the lamp housing in the reverse order.

Contents | Top of Page

2 0 0 1
VOLVO
S80

pg.101 Replacing bulbs

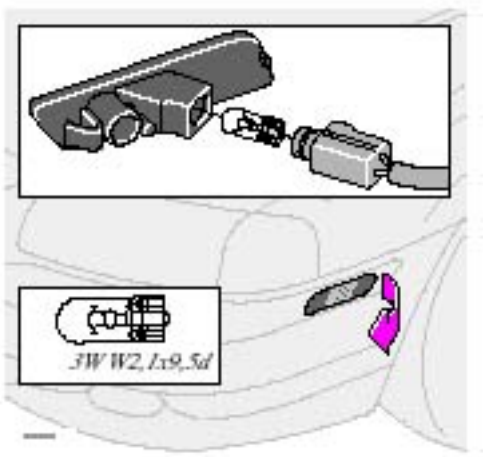

Side marker lights

· Push the lamp unit forward.
· Using your fingers, (or a small piece of plastic or wood if necessary to avoid scratching the paint) pry the lamp unit out of the fender.
· Turn the bulb holder counterclockwise and pull it out.
· Replace the bulb.
· Press the bulb holder into place and turn it clockwise.
· Reinstall the lamp unit in the fender.

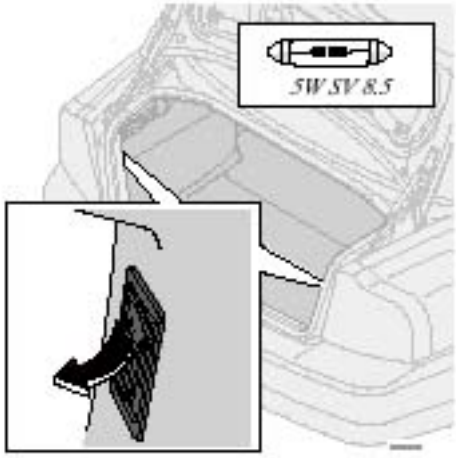

Trunk lights

· Carefully insert a screwdriver and pry out the lamp unit.
· Replace the bulb.
· Press the lamp unit back into place.

pg.102 Replacing bulbs

Front courtesy lights

These bulbs may be difficult for you to replace yourself. We recommend that you let an authorized Volvo retailer replace these bulbs if necessary.

Rear reading lights

These bulbs may be difficult for you to replace yourself. We recommend that you let an authorized Volvo retailer replace these bulbs if necessary.
NOTE: Other bulbs may be difficult for you to replace yourself. Let an authorized Volvo retailer replace these bulbs if necessary.

pg.103 Paint touch up

Paint touchup

Paint damage requires immediate attention to avoid rusting. Make it a habit to check the finish regularly when washing the car for instance. Touchup if necessary.

Paint repairs require special equipment and skill. Contact your Volvo retailer for any extensive damage.

Minor scratches can be repaired by using Volvo touchup paint.

NOTE: When ordering touchup paint from your Volvo retailer, use the paint code indicated on the model plate. The plate is located in the engine compartment.

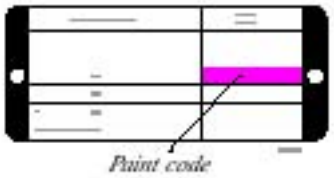

Minor stone chips and scratches
Material:

Primer can
Paint touchup bottle
Brush
Masking tape

NOTE: When touching up the car, it should be clean and dry. The surface temperature should be above 60° F (15° C).

Minor scratches on the surface

If the stone chip has not penetrated down to the metal and an undamaged layer of paint remains, the touchup paint can be applied as soon as the spot has been cleaned.

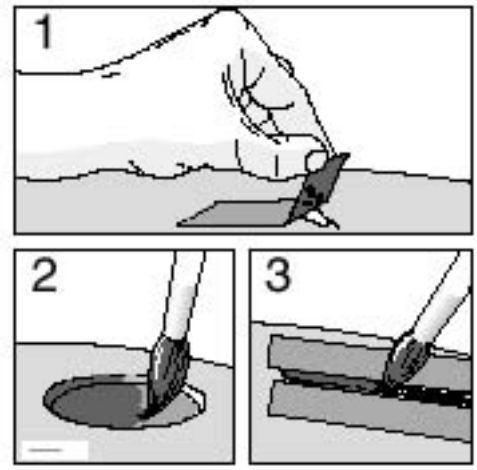

Deep scratches

1. Place a strip of masking tape over the damaged surface. Pull the tape off so that any loose flakes of paint adhere to it.

2. Thoroughly mix the primer and apply it with a small brush.
When the primer surface is dry, the paint can be applied using a brush. Mix the paint thoroughly; apply several thin paint coats and let dry after each application.

3. If there is a longer scratch, you may want to protect surrounding paint by masking it off.

pg.104 Washing the car

Washing the car

· The car should be washed at regular intervals since dirt, dust, insects and tar spots adhere to the paint and may cause damage. It is particularly important to wash the car frequently in the wintertime to

prevent corrosion, when salt has been used on the roads.
· When washing the car, do not expose it to direct sunlight. Use lukewarm water to soften the dirt before you wash with a sponge, and plenty of water, to avoid scratching.
· **Bird droppings:** Remove from paintwork as soon as possible. Otherwise the finish may be permanently damaged.
· A detergent can be used to facilitate the softening of dirt and oil.
· A water-soluble grease solvent may be used in cases of sticky dirt. However, use a wash place equipped with a drainage separator.
· Dry the car with a clean chamois and remember to clean the drain holes in the doors and rocker panels.
· Tar spots can be removed with kerosene or tar remover after the car has been washed.
· A stiff-bristle brush and lukewarm soapy water can be used to clean the wiper blades. Frequent cleaning improves visibility considerably.
· Wash off the dirt from the underside (wheel housings, fenders, etc.).
· In areas of high industrial fallout, more frequent washing is recommended.

CAUTION:

During high pressure washing, the spray mouthpiece must never be closer to the vehicle than 13" (30 cm). Do not spray into the locks.

· When washing or steam cleaning the engine, avoid spraying water or steam directly on the electrical components or toward the rear side of the engine.
· After cleaning the engine, the spark plug wells should be inspected for water and blown dry if necessary.

Suitable detergents: Special car washing detergents should be used. A suitable mixture is about 2.5 fl. oz. (8.5 cl) of detergent to 2.6 US gal.
(10 liters) of warm water. After washing with a detergent the car should be well rinsed with clean water.

Bumpers: Wash the bumpers with the same cleaning agent used on the rest of the car. Never clean the bumpers with gasoline or paint thinner. Difficult spots can be removed with denatured alcohol. To avoid scratches, do not dry the bumpers with paper.

NOTE: When washing the car, remember to remove dirt from the drain holes in the doors and sills.

WARNING!

· When the car is driven immediately after being washed, apply the brakes several times in order to remove any moisture from the brake linings.
· Engine cleaning agents should not be used when the engine is warm. This constitutes a fire risk.

Drain holes

pg.105 Washing the car, Cleaning the upholstery

Automatic washing simple and quick

· An automatic wash is a simple and quick way to clean your car, but it is worth remembering that it may not be as thorough as when you yourself go over the car with sponge and water. Keeping the underbody clean is most important, especially in the winter. Some automatic washers do not have facilities for washing the underbody.
· Before driving into an automatic wash, make sure that side view mirrors, auxiliary lamps, etc., are secure, otherwise there is risk of the machine dislodging them.

· We do NOT recommend washing your car in an automatic wash during the first six months (because the paint will not have hardened sufficiently).

Polishing and waxing

· Normally, polishing is not required during the first year after delivery, however, waxing may be beneficial.
· Before applying polish or wax the car must be washed and dried. Tar spots can be removed with kerosene or tar remover. Difficult spots may require a fine rubbing compound.
· After polishing use liquid or paste wax.
· Several commercially available products contain both polish and wax.
· Waxing alone does not substitute for polishing of a dull surface.
· A wide range of polymerbased car waxes can be purchased today. These waxes are easy to use and produce a longlasting, highgloss finish that protects the bodywork against oxidation, road dirt and fading.

· Do not polish or wax your car in direct sunlight (the surface of the car should not be warmer than 113° F (45° C).

Cleaning the upholstery

· The **fabric** can be cleaned with soapy water or a detergent. For more difficult spots caused by oil, ice cream, shoe polish, grease, etc., use a clothing/fabric stain remover.
· The **plastic** in the upholstery can be cleaned with a soft cloth and mild soap solution.

· **Leather upholstery/suede-like upholstery (alcantera™)** can be cleaned with a soft cloth and mild soap solution. For more difficult spots, Volvo offers a leather care kit.

· **On no account must gasoline, naphtha or similar cleaning agents be used on the plastic or the leather since these can cause damage.**

Cleaning the seat belts

Clean only with lukewarm water and mild soap solution.

Cleaning floor mats

The floor mats should be vacuumed or brushed clean regularly, especially during winter when they should be taken out for drying. Spots on textile mats can be removed with a mild detergent.

Bear in mind

· Take extra care when removing stains such as ink or lipstick since the coloring can spread.
· Use solvents sparingly. Too much solvent can damage the seat padding.
· Start from the outside of the stain and work toward the center.

pg.106 Maintenance service, Warranty

Maintenance service

Volvo advises you to follow the service program which is outlined in the Warranty and Service Records Information booklet. This maintenance program contains inspections and services necessary for the proper function of your car. The maintenance services contain several checks which require special instruments and tools and therefore must be performed by a qualified technician. To keep your Volvo in top condition, specify time-tested and proven Genuine Volvo Parts and Accessories.

The Federal Clean Air Act U.S.

The Clean Air Act requires vehicle manufacturers to furnish written instructions to the ultimate purchaser to assure the proper functioning of those components that control emissions. The maintenance instructions listed in this manual represent the minimum maintenance required. These services are not covered by the warranty. You will be required to pay for labor and material used. Refer to your Warranty and Service Records Information booklet for further details.

Maintenance services

Your Volvo has passed several major inspections before being delivered to you, according to Volvo specifications. The maintenance services outlined in this book should be performed as indicated. The extended maintenance service intervals make it even more advisable to follow this program. Inspection and service should also be performed any time a malfunction is observed or suspected. It is recommended that receipts for vehicle emission services be retained in the event that questions arise concerning maintenance. See your Warranty and Service Records Information booklet.

Applicable warranties U.S.

In accordance with U.S. Federal Regulations, the following list of applicable U.S. warranties is provided. For Canadian specification vehicles, see your separate warranty booklet.

· New Car Limited Warranty
· Parts and Accessories Limited Warranty
· Corrosion Protection Limited Warranty
· Seat belt and Supplemental Restraint Systems Limited Warranty
· Emission Design and Defect Warranty
· Emission Performance Warranty

These are the Federal warranties; other warranties are provided as required by state law. Refer to your separate Warranty and Service Records Information booklet for detailed information concerning each of the warranties.

pg.107 Maintenance schedule

2001
MAINTENANCE SCHEDULE
S80

For complete maintenance information, please refer to your Warranty and Service Records Information Booklet.

R= Replace
I= Inspect (Correct or Replace if necessary)
L= Lubricate

Maintenance Operation	**thousand miles**	7.5	15	22.5	30	37.5	45	52.5	60	67.5	75	82.5	90 [2]
	(thousand km)	(12)	(24)	(36)	(48)	(60)	(72)	(84)	(96)	(108)	(120)	(132)	(144)
EMISSION SYSTEM MAINTENANCE													
Engine oil and filter [1]		R	R	R	R	R	R	R	R	R	R	R	R
Engine drive belt (accessory belt)									I				
Air cleaner filter					R				R				R
Spark plugs					R				R				R
Automatic transmission fluid			I		I		I		I		I		I
Timing belt - all engines[3]													

1) See section "Engine oil" for detailed information.

NOTE: The oil should be changed at these intervals, after 750 hours of driving or after 12 months, whichever occurs first.

2) For services beyond 90,000 miles (144,000 km), please refer to the Warranty and Service Records Information Booklet".

3) For proper functioning of the vehicle and its emission control systems, the timing belt and tensioner must be replaced every 105,000 miles (168,000 km).

pg.108 Maintenance schedule

2001
MAINTENANCE SCHEDULE
S80

R= Replace
I= Inspect (Correct or Replace if necessary)
L= Lubricate

Maintenance Operation	**thousand miles**	7.5	15	22.5	30	37.5	45	52.5	60	67.5	75	82.5	90
	(thousand km)	(12)	(24)	(36)	(48)	(60)	(72)	(84)	(96)	(108)	(120)	(132)	(144)
EMISSION SYSTEM MAINTENANCE													
Engine													
Fuel line filter[1]													
PCV nipple (orifice)/hoses, clean									I				I
Battery (check charge and electrolyte level)		I	I	I	I	I	I	I	I	I	I	I	I
Brakes													
Inspect brake pads, replace components as necessary			I	I	I	I	I	I	I	I	I	I	I
Brake fluid level[2] - check			I		I		I		I		I		I
Steering/suspension													
Tires[3], check pressure, wear and condition		I	I	I	I	I	I	I	I	I	I	I	I
Check power steering fluid level			I		I		I		I		I		I
Body													
Power antenna (clean)			L		L		L		L		L		L
Trunk/hood, hinges and latches			L		L				L				L
Cabin air filter (see page 111)			R		R		R		R		R		R

1) Replace at 105,000 miles (168,000 km)

2) Brake fluid should be changed at owner request every second year or 30,000 miles (48,000 km). The fluid should be replaced once a year or every 15,000 miles (24,000 km) when driving under extremely hard conditions (mountain driving, etc.).

3) Rotate tires at owner request.

The following items should be checked weekly by the driver (it takes only a few minutes):

Engine oil level, brake fluid level, radiator coolant level, operation of all lights, horns, windshield wipers, tire pressure (all five tires), windshield washer fluid level

The following should also be carried out at regular intervals:

Washing (check all drain holes), polishing, cleaning

pg.109 Fuel/emissions systems

Fuel system

The fuel system continually compensates for variation in engine load, speed and temperature. A mass air flow sensor continuously measures the inducted air and makes rapid adjustments for changes in air temperature and density, to balance fuel economy, emissions, and engine power requirements.

Heated oxygen sensor

This is an emission control system designed to reduce emissions and improve fuel economy. The heated oxygen sensor monitors the composition of the exhaust gases leaving the engine. The exhaust gas analysis is fed into an electronic module. This adjusts the air/fuel ratio to improve combustion and reduce the three major pollutants (hydrocarbons, carbon monoxide, and oxides of nitrogen (NOx)) via a three-way catalytic converter.

Crankcase ventilation

The engine is provided with positive crankcase ventilation which prevents crankcase gases from being released into the atmosphere. Instead, the crankcase gases are routed to the intake manifold and cylinders.

Prem-Air

On the surface of the radiator, in the engine compartment, there is a special coating called Prem-Air. Prem-Air works as a catalytic converter, converting most of the ozone passing through the radiator into oxygen, thereby reducing harmful ground-level ozone.

Evaporative control system

The car is equipped with an evaporative control system which prevents gasoline vapor from being released into the atmosphere.

The system consists of a fuel tank with filler pipe and cap, two rollover valves, a Fill Limit Vent Valve (FLVV), vapor vent lines, a charcoal canister, a purge line, a purge control valve and engine connections.

In addition, there is a pressure sensor connected to the fuel tank and a filter-protected Canister Close Valve (CCV) on the atmospheric side of the canister, for system diagnosis.

The gasoline vapor is channeled through the rollover valves and the FLVV via the vapor vent lines into the charcoal canister, where it is stored. When the engine is started, the gasoline vapor is drawn from the charcoal canister to the engine's air intake system and into the combustion process.

NOTE:

· Overfilling the fuel tank can cause damage to the evaporative control system.
· If the fuel filler cap is not closed tightly or if the engine is running when the car is refueled, the Malfunction Indicator Lamp may indicate a fault.
· During a transitional period, a small number of service stations may still have fuel nozzles that are not compatible with the fuel filler neck on cars equipped with the evaporative control system mandat-ed by the U.S. Environmental Protection Agency and the California Air Resources Board. If you experience difficulties in refueling your vehicle, please ask the gas station attendant for assistance.

CAUTION:

Fuel must not be siphoned from the fuel tank. This will damage the Evaporative control system.

pg.110 Drive belt, Air pump system, Coolant

Belt check

Check the belt regularly to make sure it is in good condition and is clean. A worn or dirty belt can cause poor cooling and low generator output as well as impair the operation of the power steering and the air conditioning unit.

NOTE: The drive belt is equipped with a selftensioning mechanism and requires no adjustment between changes.

WARNING!

The engine must not be running when this check is performed.

Check coolant level

The cooling system must be filled with coolant and not leak to operate at maximum efficiency. Check the coolant level regularly. The level should be between the "MAX" and "MIN" marks on the expansion tank. The check should be made with particular thoroughness when the engine is new or when the cooling system has been drained.

Do not remove the filler cap other than for topping up with coolant. Frequent removal may prevent coolant circulation between the engine and the expansion tank during engine warm up and cooling.

Changing coolant

Normally, the coolant does not need to be changed. If the system must be drained, consult your Volvo retailer.

NOTE: Do not top up with water only. This reduces the rustprotective and antifreeze qualities of the coolant and has a lower boiling point. It can also cause damage to the cooling system if it should freeze. Top up with Volvo Genuine Coolant/Antifreeze only.

CAUTION:

The cooling system must always be kept filled to the correct level. If it is not kept filled, there can be high local temperatures in the engine which could result in damage. Different types of antifreeze/coolant may not be mixed.

WARNING!

Never remove the radiator cap while the engine is warm. Wait until the car cools.

Contents | Top of Page

2 0 0 1
VOLVO
S80

pg.111 Servicing

Air cleaner

Replace the air cleaner cartridge with a new one every 30,000 miles (48,000 km). The cartridge should be replaced more often when driving under dirty and dusty conditions. The filter cannot be cleaned and therefore should always be replaced with a new one.

Timing belt

For proper functioning of the vehicle and its emission control systems, the timing belt must be replaced every 105,000 miles (168,000 km). Engine damage will occur if the belt fails.

Fuel system cap, tank and lines and connections

The effectiveness of the fuel system to contain hydrocarbons is dependent largely on a leakfree system. Check for proper sealing of the fuel filler cap which contains "O" ring type seals.

NOTE: If the fuel filler cap is not closed tightly or if the engine is running when the car is refueled, the Malfunction Indicator Lamp ("Check Engine") may indicate a fault. However, your vehicle's performance will not be affected. Use only Volvo original or approved fuel filler caps.

Fuel (line) filter

For proper functioning of the vehicle and its emission control systems, the fuel line filter should be replaced at 105,000 miles (168,000 km). The filter is replaced as one complete unit. Replace more frequently if contaminated fuel is introduced into the tank (or if there is reason to suspect that this has occurred).

PCV system

The orifice nipple in the intake manifold and the filter at the end of the PCV hose in the air cleaner

should be inspected at 60,000 miles (96,000 km) and thereafter, at 30,000 mile (48,000 km) intervals.

Cabin air filter

Replace the cabin air filter with a new one at 15,000 mile (24,000 km) intervals. Volvo recommends replacing the filter more often if the car is driven under dirty and dusty conditions. The filter cannot be cleaned and therefore should always be replaced with a new one.

pg.112 Servicing

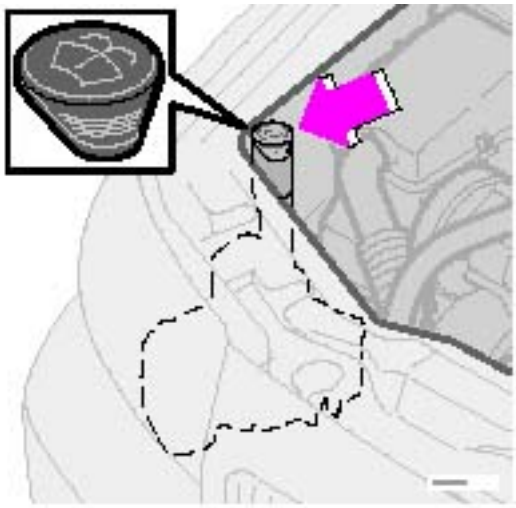

Washer fluid reservoir

The washer fluid reservoir is located in the engine compartment and holds approx. 4.7 US qts. (4.5 liters).

During cold weather, the reservoir should be filled with windshield washer solvent containing antifreeze.

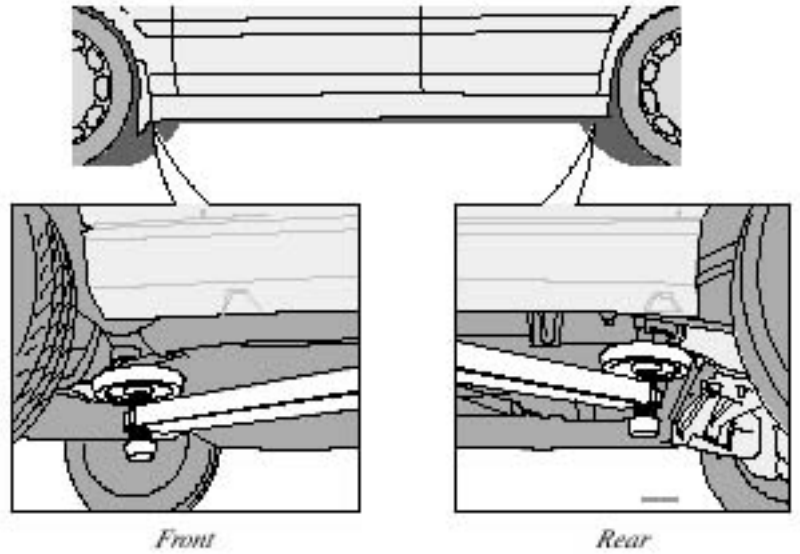

Hoisting the car

If a garage jack is used to lift the car, the two jack attachments points should be used. They are specially reinforced to bear the weight of the car. A garage jack can also be placed under the front of the engine support frame. Take care not to damage the splash guard under the engine. **Ensure that the jack is positioned so that the car cannot slide off it. Always use axle stands or similar structures.**

If a twopost hoist is used to lift the car, the front and rear lift arm pads should be centered under the reinforced lift plates on the inboard edge of the sill rail (see illustration above).

pg.113 Opening the hood, Engine compartment

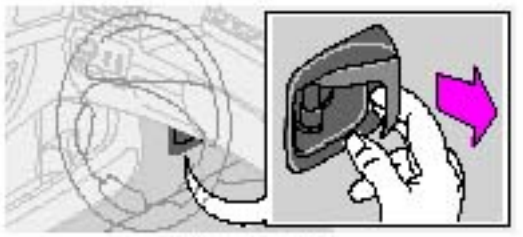

Pull the handle...

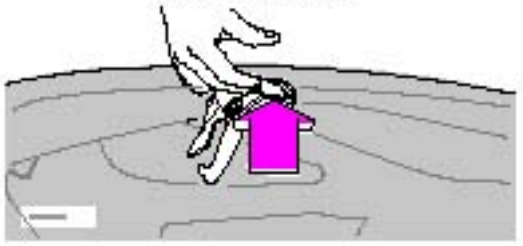

...press up and open the hood

Opening the hood

· Pull the lever located under the left side of the dash to release the hood lock.
· Lift the hood slightly.
· Press up the release control located under the front edge of the hood (at the center) and lift.

WARNING!

Check that the hood locks properly when closed.

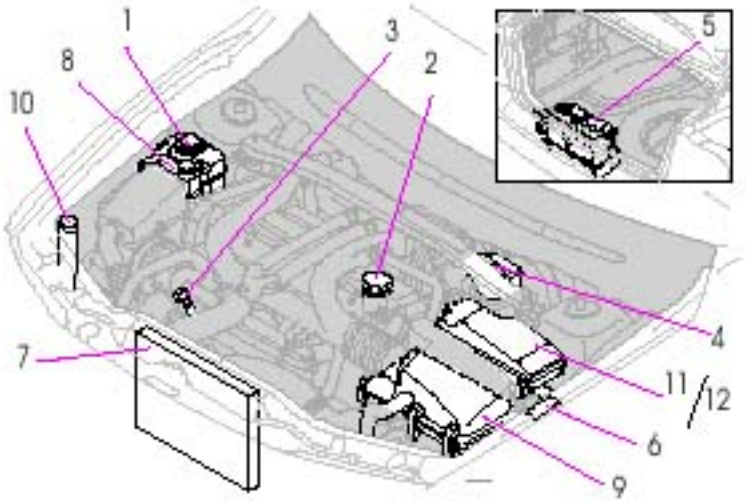

Engine compartment
1 Expansion tank - coolant
2 Oil filler cap - engine
3 Dipstick - engine oil
4 Brake fluid reservoir
5 Battery (in trunk)
6 Data plate
7 Radiator/cooling fan
8 Power steering fluid reservoir
9 Air cleaner
10 Washer fluid reservoir
11 Main fuse box
12 Relay/fuse box

WARNING!

The cooling fan may start or continue to operate (for up to 6 minutes) after the engine has been switched off.

pg.114 Engine oil

Oil quality

Meeting minimum ILSAC specification GF-2, including ACEA A1, API SJ, SJ/CF and SJ/Energy Conserving.

Depending on your driving habits, premium or synthetic oils may provide superior fuel economy and engine protection. Consult your Volvo retailer for recommendations on premium or synthetic oils. **Oil additives must not be used unless advised by an authorized Volvo retailer.**

Volvo recommends use of oil with a quality rating equal to or higher than ILSAC GF-2. Equivalent and better oils include ACEA A1, API SJ, SJ/CF, and SJ/Energy conserving. Lower quality oils may not offer the same fuel economy, engine performance, or engine protection.

Oil iscosity (stable ambient temperatures)
Operation in temperate climates

Incorrect viscosity oil can shorten engine life. Under normal use when temperatures do not exceed 86 ¡F, SAE 5W/30 will provide good fuel economy and engine protection. See the viscosity chart at right.

Operation in hot climates

When temperatures exceed 86 ¡F in your area, Volvo recommends, for the protection of your engine, that you use a heavier weight oil, such as SAE 10W/30. See the viscosity chart at right.

Extreme engine operation

Synthetic oils meeting SAE 10W/30 and complying with oil quality requirements are recommended for driving in areas of sustained temperature extremes (hot or cold), when towing a trailer over long distances, and for prolonged driving in mountainous areas.

Changing oil and oil filter

Oil and oil filter changes should be made at 7,500 mile (12,000 km) intervals.

Extra oil additives must not be used unless advised by an authorized Volvo retailer. Synthetic oil is not used when the oil is changed at the normal maintenance service intervals.

The API Service Symbol "donut" is divided into three parts:
· The top half describes the oil's performance level.
· The center identifies the oil's viscosity.
· The bottom half tells whether the oil has demonstrated energy-conserving proper-ties in a standard test in comparison to a reference oil.

Viscosity (stable ambient temperatures):

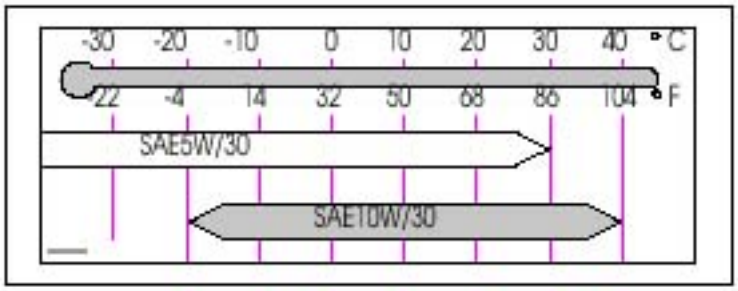

pg.115 Engine oil

Checking the oil level

The oil level should be checked every time the car is refuelled. This is especially important during the period up to the first service.

CAUTION:

Not checking the oil level regularly can result in serious engine damage if the oil level becomes too low.

Park the car on a level surface and wait for at least 5 minutes after the engine has been switched off. Be sure the oil level is maintained between the upper and lower marks on the dipstick. Low oil level can cause internal damage to the engine and overfilling can result in high oil consumption. The distance between the dipstick marks represents approx. 1.6 US qt (1.5 liter). The oil should preferably be checked when cold, before the engine has been started.

NOTE: The engine must be stopped when checking the oil.

WARNING!

Do not allow oil to spill onto or come into contact with hot exhaust pipe surfaces.

Adding oil (topping up)

· Add oil of the same kind as already used.
· Capacity (including filter):

Normally-aspirated 6-cylinder engine - 7.3 US qts (6.9 liters).

Turbo 6-cylinder engine - 7.3 US qts (6.9 liters).

· The oil filter should be replaced at every oil change.

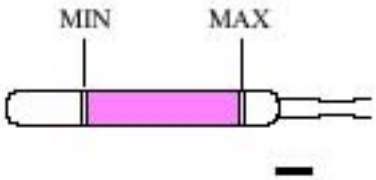

Approx. 1.6 US qt (1.5 liter)

pg.116 Power steering/Brake fluid reservoirs

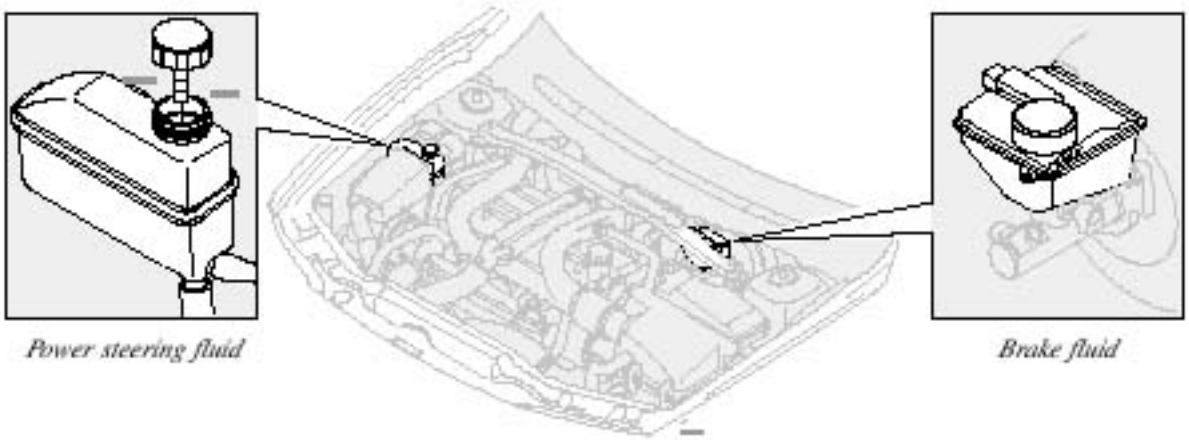

Power steering fluid

The fluid level should always be between the MIN and MAX marks.

Fluid type: ATF

Replace: No fluid change required

Brake fluid

The brake fluid should always be above the MIN mark on the side of the reservoir. Check, without removing the cap, that there is sufficient fluid in the reservoir.

Fluid type: DOT 4+

Replace: Every second year or 30,000 miles (48,000 km). The fluid should be replaced once a year or every 15,000 miles (24,000 km) when driving under extremely hard conditions (mountain driving, etc.)

Always entrust brake fluid changing to an authorized Volvo retailer.

pg.117 Battery maintenance

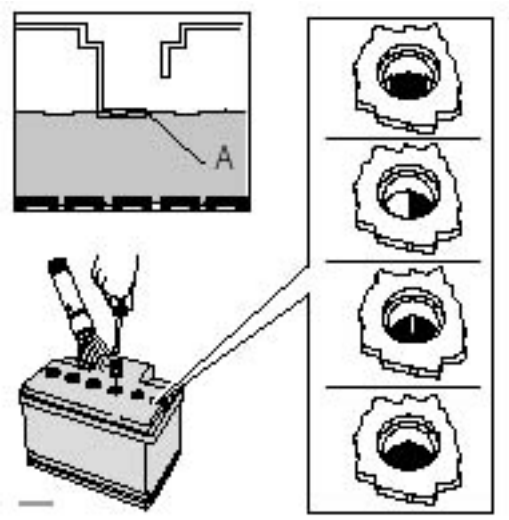

Battery maintenance

The battery in your car is located under the floor of the trunk.

Driving habits and conditions, climate, the number of starts, etc. all affect the service life and function of the battery. In order for your battery to perform satisfactorily, keep the following in mind:

· Check the fluid level in each cell in the battery every 6 months or every 7,500 * miles (12,000 km). The fluid should be at the level shown in the illustration above (A).
Use a screw driver to open the caps and a flashlight to inspect the level.

· If necessary, add **distilled water**. The level should never be above the indicator (A).
· The fluid level should be checked if the battery has been recharged.
· After inspection, be sure the cap over each battery cell is securely in place.
· Check that the battery cables are correctly connected and properly tightened.
· The battery should be disconnected from the vehicle when a battery charger is used directly on the battery.
· The battery should be disconnected when a boost charger is used directly on the battery. However, if the battery is being charged via the connecting points in the engine compartment (see page 79), the battery **must** be connected.

PROPOSITION 65 WARNING!
Battery posts, terminals, and related accessories contain lead and lead com-pounds, chemicals known to the state of California to cause cancer and reproductive harm. Wash hands after handling.

Battery warning symbols

Wear protection goggles

See owner's manual for details

Keep away from children

Corrosive

No smoking, no open flames, no sparks

Explosion

* More frequently in warm climates.

** The level indicator inside the battery could be designed in various ways. See illustration above!

pg.118 Battery maintenance

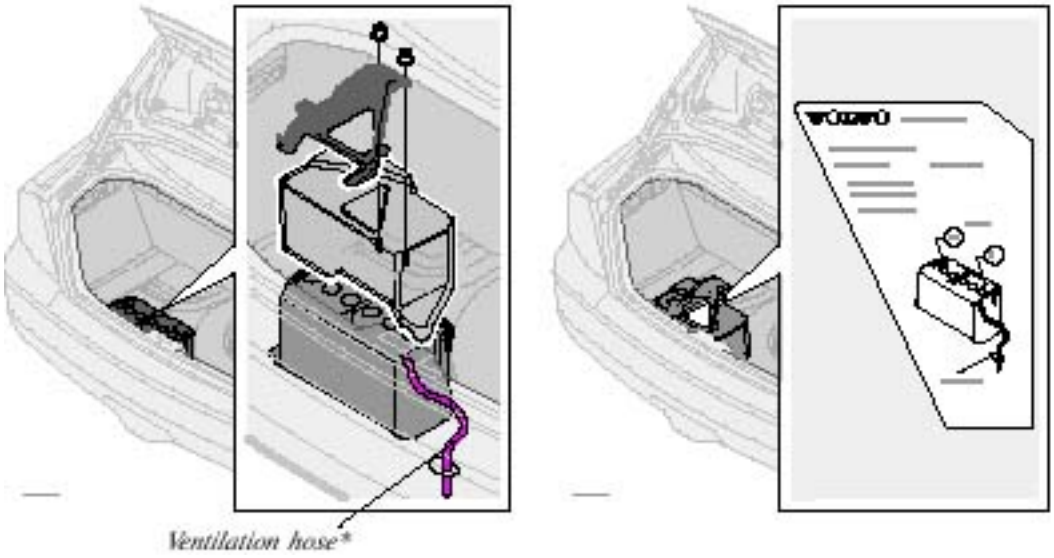

Replacing the battery

· Switch off the ignition.
· Unscrew the cover over the battery. Wait at least **10** minutes after switching off the ignition before disconnecting the battery so that all information in the car's electrical system can be stored in the control modules.
· Disconnect the negative (ground) cable first.
· Disconnect the positive cable and pull the ventilation hose* from the battery.
· Lift out the old battery and put a new battery into place.
· Connect the positive cable first.
· Connect the negative (ground) cable.
· Be sure that the ventilation hose* is securely connected to the battery and that the other end of the hose is properly routed through the ventilation opening in the floor of the battery compartment.
· Reinstall the cover and screw it securely in place.

WARNING!

· Never expose the battery to open flame or electric spark.
· Do not smoke near the battery.
· Battery fluid contains sulfuric acid. Do not allow battery fluid to contact eyes, skin, fabrics or painted surfaces. If contact occurs, flush the affected area immediately with water. Obtain medical help immediately if eyes are affected.

WARNING!

*** Ventilation hose: The battery generates hydrogen gas, which is flammable and explosive. The battery is fitted with a ventilation hose which vents hydrogen gas out of the battery compartment through a ventilation opening in the bottom of this compartment. If the battery must be replaced, it is essential that the ventilation hose is properly connected to the battery and that it is routed through the ventilation opening provided (see illustration).**
Be sure the ventilation hose is free of debris.
Only use replacement batteries equipped with a ventilation hose. Consult your Volvo retailer.

pg.119 Replacing wiper blades

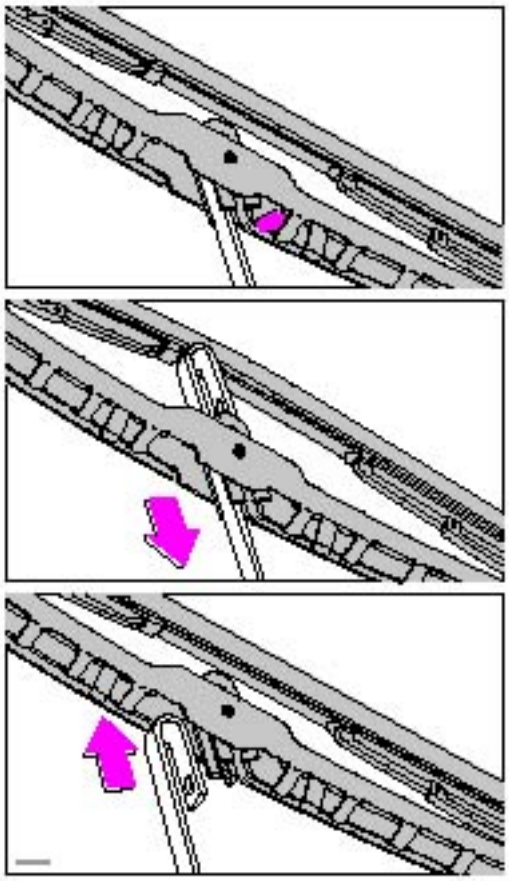

The driver's side wiper blade is straight. The passenger's side wiper blade is curved to match the curve at the base of the windshield.

Windshield wiper blades

Lift the wiper arm off the windshield and hold the blade at a 45° to the arm. Press the end of the plastic clip located on the arm.

Slide the wiper blade along the arm to release it from the hook. The entire hooked part of the wiper arm must pass through the opening in the wiper blade.

Pull the old blade free of the wiper arm. Install the new blade (installation is the reverse of removal) and make sure that it is properly attached to the wiper arm.

NOTE: For reasons of safety, you should change the windshield wiper blades as soon as they start to leave marks on the windshield or fail to wipe efficiently and cleanly.

To obtain maximum lifetime from a set of wiper blades, clean them with a stiffbristle brush and warm, soapy water as part of a normal car wash.

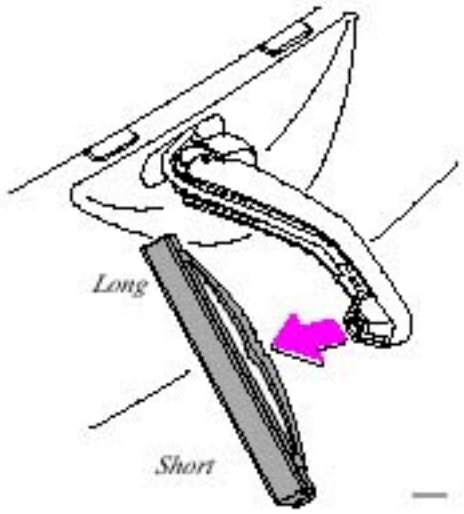

Headlight wiper blades (certain models)

Pull the wiper blade in the direction indicated by the arrow in the illustration to remove it. Press the new wiper blade into place. The long section of the blade should point toward the grille. Check that the new blade is properly attached to the wiper arm.

pg.120

Contents | Top of Page

2 0 0 1
VOLVO
S80

Chapter 9 - Specifications

pg.121 Specifications

Label information 122

Dimensions and weights 123

Engine/transmission specifications 124

Oil/fluid specifications and volumes 125

Fuel system, Distributor ignition system, Suspension 126

Electrical system 127

Volvo On Call 128

pg.122 Label information

1 Vehicle Emission Control Information

Your Volvo is designed to meet all applicable emission standards, as evidenced by the certification label on the underside of the hood. For further information regarding these regulations, please consult your Volvo retailer.

2 Vacuum hose routing
(underside of hood)

3 Loads and Tire Pressures
(on inside of fuel filler door)

4 Model plate

Vehicle Identification Number (VIN). Codes for color and upholstery, etc. The plate is located in the engine compartment, on the inside of the left front fender.

5 Vehicle Identification Number (VIN) *

The VIN plate is located on the top left surface of the dashboard. The VIN is also stamped on the right hand door pillar.

6 Federal Motor Vehicle Safety Standards (FMVSS) specifications (USA) and Ministry of Transport (CMVSS) standards (Canada)

Your Volvo is designed to meet all applicable safety standards, as evidenced by the certification label on the facing side of the driver's door. For further information regarding these regulations, please consult your Volvo retailer.

7 Child safety latch label

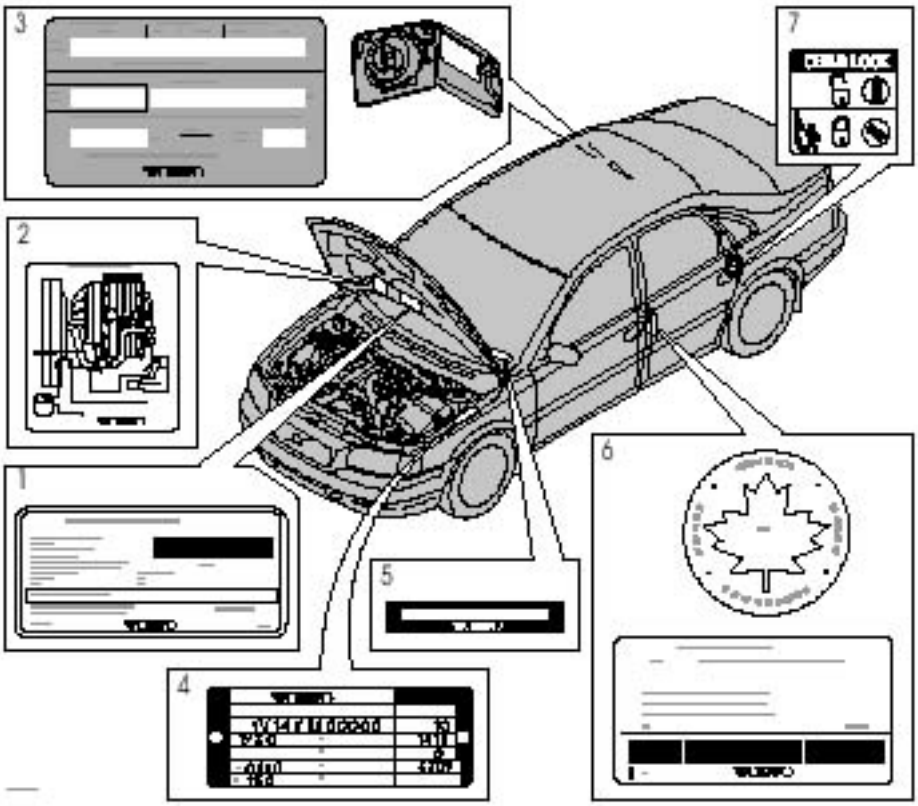

* The Vehicle Identification Number (VIN) should always be quoted in all correspondence concerning your vehicle with the retailer and when ordering parts.

All specifications are subject to change without prior notice.

pg.123 Dimensions and weights

Dimensions

Length	189.8 in. (482 cm)
Width	72 in. (183 cm)
Height	57.1 in. (145 cm)
Wheelbase	109.8 in. (279 cm)
Track, front	62.2 in. (158 cm)
Track, rear	61.4 in. (156 cm)
Turning circle (between curbs)	35.8 - 39 ft. (10.9 - 12 m)
Cargo capacity - trunk	14.2 cu. ft. (0.4 m^3)

Weights

	USA	Canada
Gross vehicle weight (GVW)		
6 cyl.	4608 lbs (2090 kg)	2090 kg
6 cyl. turbo	4670 lbs (2118 kg)	2120 kg
Capacity weight *		
6 cyl.	890 lbs (400 kg)	400 kg
6 cyl. turbo	890 lbs (400 kg)	400 kg
Curb weight		
6 cyl.	3585-3620 Ibs (1626-1642 kg)	1625-1640 kg
6 cyl. turbo	3655-3685 Ibs (1658-1671 kg)	1655-1675 kg
Permissible axle weight, front		
6 cyl.	2491 Ibs (1129 kg)	1130 kg
Permissible axle weight, rear		
6 cyl.	2293 lbs (1039 kg)	1040 kg
Max roof load	220 lbs (100 kg)	100 kg
Max trailer weight		

(w/o brakes)	1100 lbs (500 kg)	500 kg
Max trailer weight (with brakes)		
2" ball	3300 lbs (1500 kg)	1500 kg
1 7/8" ball	2000 lbs (908 kg)	900 kg
Max tongue weight **	165 lbs (75 kg)	75 kg

WARNING!

When adding accessories, equipment, luggage and other cargo to your vehicle, the total loaded weight capacity of the vehicle must not be exceeded.

* The max permissible axle loads or the gross vehicle weight must not be exceeded.

** See also section "Trailer towing"

All specifications are subject to change without prior notice.

pg.124 Engine/transmission specifications

Engine specifications

Designation: Volvo B 6284 T	
Output	268 hp at 5400 rpm (200 KW/90 rps)
Max torque	280 ft. lbs. at 2100-5000 rpm (380 Nm at 35-83 rps)
Number of cylinders	6
Bore	3.19" (81 mm)
Stroke	3.54" (90 mm)
Displacement	2.78 liters
Compression ratio	8.5:1
Number of valves	24

Charge air cooler (Intercooler)

Turbocharged engines employ a turbocompressor to force air into the engine inlet manifold and a charge air cooler to cool the compressed inlet air. The resulting increase in air flow raises pressure in the intake manifold and increases engine power over that developed by the normallyaspirated engine. The charge air cooler (which resembles a radiator) is located between the turbocompressor and inlet manifold.

Designation: Volvo B 6294 S	
Output	197 hp at 6000 rpm (147 KW/100 rps)
Max. torque	207 ft. lbs. at 4200 rpm (280 Nm at 70 rps)
Number of cylinders	6
Bore	3.27" (83 mm)
Stroke	3.54" (90 mm)
Displacement	2.92 liters
Compression ratio	10.5:1
Number of valves	24

Transmission specifications

Automatic transmission

Gear ratios:

Engine:	**B 6284 T**	**B 6294 S**
1st gear	2.92:1	3.27:1
2nd gear	1.57:1	1.76:1
3rd gear	1.00:1	1.12:1
4 th gear	0.70:1	0.79:1
5 th gear		
Reverse	2.38:1	2.67:1
Final drive	3.29:1	3.69:1

All specifications are subject to change without prior notice.

pg.125 Oil/fluid specifications and volumes

Engine oil

Meeting minimum ILSAC specification GF-2, including ACEA A1, API SJ, SJ/CF and SJ/Energy Conserving.

Extra oil additives must not be used unless advised by an authorized Volvo retailer.

Volume: (including filter):
Normally-aspirated 6-cylinder engine - 7.3 US qts (6.9 liters).
Turbo 6-cylinder engine - 7.3 US qts (6.9 liters).

Automatic transmission fluid

Geartronic: ATF Dexron® III.
AW5: Only Volvo gearbox oil (1161540-8). Do not mix with other oils.

Volume: 7.9 US qts (7.5 liters).

Cooling system

Type: Positive pressure, closed system. The thermostat begins to open at 194 °F (90 °C).
Coolant: Volvo original coolant/antifreeze.

Volume: Normally-aspirated 6-cylinder engine - 9.3 US qts (8.8 liters).
Turbo 6-cylinder engine - 10.1 US qts (9.6 liters).

Power steering fluid

ATF fluid.

Volume:6 cyl engine - 0.95 US qt (0.9 liter).

Brake fluid

DOT 4+

Volume: 0.6 US qt (0.6 liter)

Climate control system - refrigerant (R 134a)

Oil: PAG

Volume: 2.2 lbs (1000 g) R134a.

Fuel

Minimum octane requirement - AKI 87 (RON 91)

Volume (fuel tank): 21.1 US gals (80 liters)

Washer fluid reservoir

Volume: 6 cyl: 4.7 US qts. (4.5 liters)

All specifications are subject to change without prior notice.

pg.126 Fuel system, Distributor ignition system, Suspension

Fuel system

The engine is equipped with a multiport fuel injection system.

Distributor ignition system

Firing order:	15-3-6-2-4
Distributor ignition setting:	Not adjustable
Spark plugs:	B 6284 T: P/N 271367-4 (or equivalent)
	B 6294 S: P/N 272371-8 (or equivalent)
Spark plug gap:	0.028-0.032" (0.7-0.8 mm)
Tightening torque:	18.4 ft. lbs. (25 Nm)

Replacing spark plugs

The spark plugs should be changed every 30,000 miles (48,000 km). However, city driving or fast highway driving may necessitate changing after 15,000 miles (24,000 km) of driving. When installing new plugs, be sure to fit the right type and use correct torque. When changing the plugs, check that the suppressor connectors are in good condition. Cracked or damaged connectors should be replaced. When changing the spark plugs, clean the terminals and the rubber seals.

WARNING!

The distributor ignition system operates at very high voltages. Special safety precautions must be followed to prevent injury. Always turn the ignition off when:

· Replacing distributor ignition components e.g. plugs, coil, etc.

· Do not touch any part of the distributor ignition system while the engine is running. This may result in unintended movements and body injury.

Front suspension

Spring strut suspension with integrated shock absorbers and control arms linked to the support frame. Powerassisted rack and pinion steering. Safety type steering column.

The alignment specifications apply to an unladen car but include fuel, coolant and spare wheel.

Toe-in measured on the wheel rims: 2.3 mm +/ 0.8 mm

Toe-in measured on tire sides: 2.8 +/ 0.9 mm

Rear suspension

Individual rear wheel suspension with longitudinal support arms, double link arms and track rods.

Toe-in measured on the tire sides: 1.9 mm +/ 1.9 mm

Vehicle loading

The tires on your Volvo should perform to specifications at all normal loads when inflated as recommended on the tire information label. The label is located on the inside of the fuel tank cover. The label lists both tire and vehicle design limits. Do not load your car beyond the load limits indicated.

WARNING!

Improperly inflated tires will reduce tire life, adversely affect vehicle handling and can possibly lead to failure resulting in loss of vehicle control without prior warning.

All specifications are subject to change without prior notice.

pg.127 Electrical system

Electrical system

12 Volt, negative ground.

Voltagecontrolled generator. Singlewire system with chassis and engine used as conductors. Grounded on chassis.

Battery

Voltage: 12 Volt, capacity: 600 A/115 min.

The battery contains corrosive and poisonous acids. It is of the utmost importance that old batteries are disposed of correctly. Your Volvo retailer can assist you in this matter.

Generator

Rated output: max. current: 120 A

Starter motor:

Output: 1.7 kW

Bulbs

Bulb	US no.	Power	Socket
Headlights			
High beam	H7	55W	-
Low beam	H7	55W	-
Front parking lights/ direction indicators	1157NA	21/5 W	BAY 15d
Front fog lights	H1	55 W	-
Side marker lights	-	3 W	W2.1x9.5d
Rear direction indicators	-	21W	BAU 15 s
Tail lights	67	5W/4cp	BA 15 s

Brake lights	1156	21W/32cp	BA 15 s
Backup lights	1156	21W/32cp	BA 15 s
Rear fog light	1156	21W/32cp	BA 15 s
License plate light	-	5 W	W 2.1x9.5d
Door step courtesy lights			
Front	-	5W	SV 8.5
Rear	-	5W	W 2.1x9.5d
Trunk lights	-	10 W	SV 8.5
Glove compartment light	-	2 W	BA 9s
Vanity mirror lights	-	1.2 W	SV 5.5
Instrument lighting	-	3 W	W 2.1x9.5d
Rear ashtray	-	1.2 W	W 2x4.6d
Front courtesy lights	-	10 W	SV 8.5
Rear reading lights	-	5 W	W2.1x9.5d
Sideview mirror	-	5W	W2.1x9.5d

All specifications are subject to change without prior notice.

pg.128 Volvo On Call

Your new Volvo comes with a four year ON CALL road assistance. Additional information, features, and benefits are described in a separate information package in your glove compartment. If you have misplaced your package, dial:

In the U.S.A.

1-800-63-VOLVO (1-800-638-6586)

In Canada:

1-800-263-0475

Volvo supports Voluntary Mechanic Certification by the A.S.E. (pertains to the USA only). Certified mechanics have demonstrated a high degree of competence in specific areas. Besides passing exams each mechanic must also have worked in the field for two or more years before a certificate is issued. These professional mechanics are fully able to analyze vehicle problems and perform the necessary service procedures to keep your Volvo at peak operating condition.
All specifications are subject to change without prior notice.

Contents | Top of Page

2 0 0 1
VOLVO
S80

Chapter 10 - Audio systems

pg.129 Audio systems

HU-611 overview 130

HU-801 overview 131

Functions 132

Specifications 144

General information 145

HomeLink¨ Unversal Transceiver (option) 146

NOTE: The text on the face of the radio, describing the button functions, may vary slightly depending on which audio system you have in your car.

pg.130 Audio system HU-611 - overview

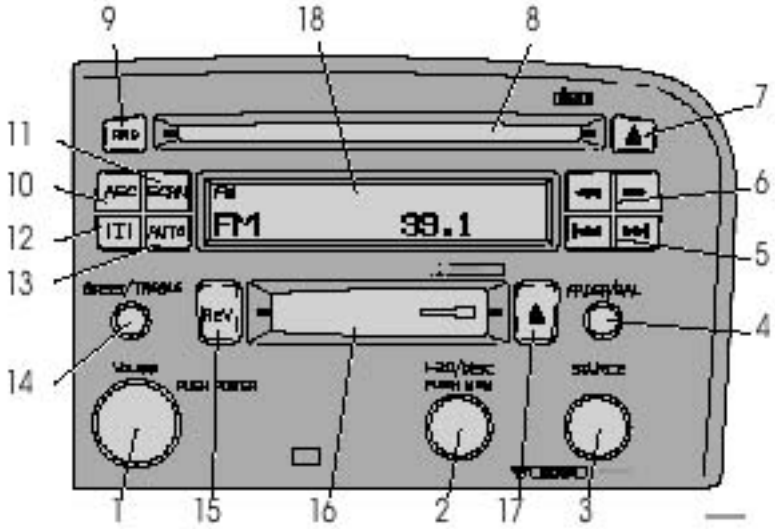

1. On/off - press
Volume - turn
2. Selector knob for:
Stored radio frequencies
CD changer - selecting disc
3. Selector knob:
Radio
Cassette
CD
CD changer
TV (option on certain models)
4. Fader - press and turn
Balance - press, pull and turn
5. Radio - Station seek up/down
Cassette - selecting next/previous track
CD - Selecting next/previous track
6. Radio - Manual station selection
Cassette - Fast winding forward/backward
CD - Fast forwards/backward
7. CD eject
8. CD slot
9. CD random play
10. Active Sound Control (ON or OFF)
11. Scan function
12. Dolby B Noise Reduction
13. Automatic presetting of radio stations
14. Bass - press and turn
Treble - press, pull and turn
15. Tape direction selector
16. Cassette opening

17. Cassette eject
18. Display

pg.131 Audio system HU-801 - overview

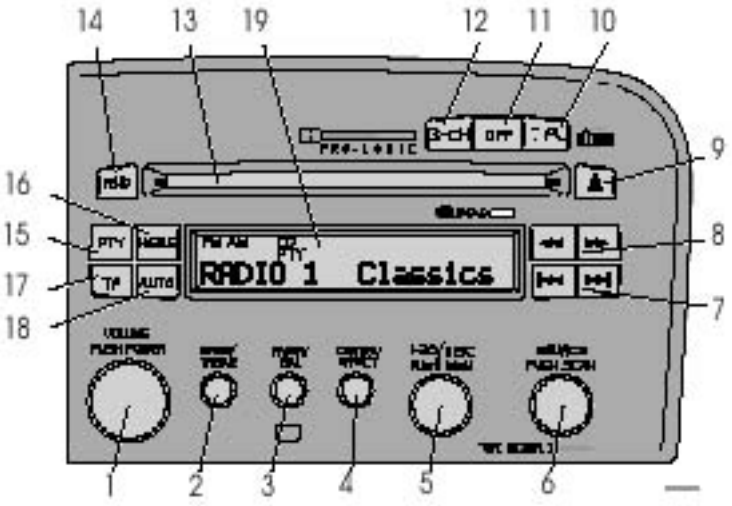

1. On/off - press
Volume - turn
2. Bass - press and turn
Treble - press, pull and turn
3. Fader - press and turn
Balance - press, pull and turn
4. Center volume - press and turn
Effect channel volume - press, pull and turn
5. Selector knob for:
Stored radio frequencies
CD - selecting disc
6. Selector knob:
Radio
Internal CD changer
CD
Station scan - press
TV (option on certain models)
External CD changer (option)
7. Radio - Station seek up/down
CD - Selecting next/previous track
8. Radio - Manual station selection
CD - Fast forward/backward
9. CD eject
10. Dolby Pro Logic - switching on

11. 2 channel stereo
12 3 channel stereo
13. CD slot
14. CD random play
15. Program type
Active Sound Control (ON or OFF)
16. News
17. Traffic information
18. Automatic presetting of radio stations
19. Display

pg.132 Audio systems HU-611/HU-801

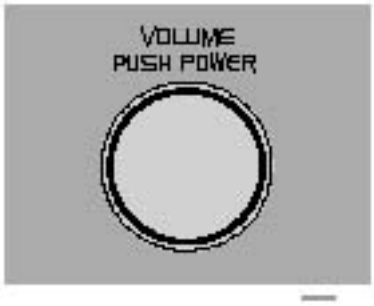

Switch on/off

Press the knob to switch on or turn off the radio.

Volume control

Turn the knob clockwise to increase volume. Volume control is electronic and does not have an end stop. If you have a key pad in the steering wheel, increase or decrease the volume with the + or- buttons.

Bass

Adjust the bass by pressing the button to extend the control and turning it to the left (less bass) or to the right (more bass). A "detent" indicates "equalized" bass. Press the button back in when you have made the adjustment.

Treble

Adjust the treble by pressing the button to extend the control, pulling it out as far as possible, and then turning it to the left

(less treble) or to the right (more treble). A "detent" indicates "equalized" treble. Press the button back in when you have made the adjustment.

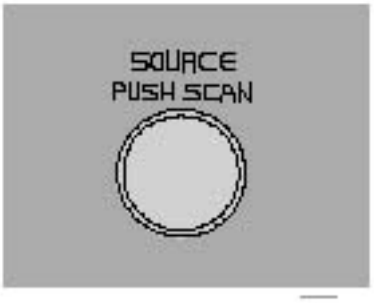

Wavelength selector

Turn "SOURCE" knob to select FM or AM. The station and wavelength are displayed. You can also select cassette deck, CD or CD changer, if connected, with this knob.

Active sound control (ASC)

The ASC (Active Sound Control) automatically adapts volume to vehicle speed.

Press the ASC button (HU-611) or the PTY button (HU-801) for several seconds to switch this function ON or OFF.

This function is included in the Advanced User Mode on the HU-801 equipped with this feature.

"ASC ON" or "ASC OFF" will be shown in the display for several seconds.

pg.133 Audio systems HU-611/HU-801

Fader - Balance front/rear

Adjust front/rear speaker balance by pressing the button to extend the control and turning it to the left (more sound from the rear speakers) or to the right (more sound from the front speakers). A "detent" indicates "equalized" balance. Press the button back in when you have made the adjustment.

Balance right/left

Adjust left/right speaker balance by pressing the button to extend the control, pulling it out as far as possible and then turning it to the left (more sound from the left speakers) or to the right (more sound from the right speakers). A "detent" indicates "equalized" balance. Press the button back in when you have made the adjustment.

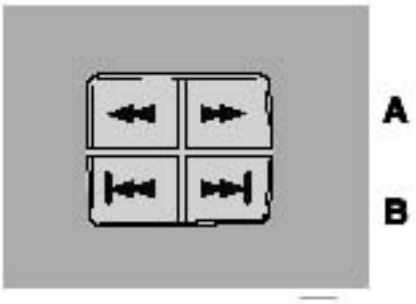

A - Setting station

Press the left side of the button to select lower frequencies and the right side for higher frequencies. Set frequencies are displayed.

B - Station seek up/down

Press the left side (lower frequency) or right side (higher frequency) of the button to start the seek function. The radio seeks the next audible station and tunes it in. Repeat the procedure to continue the seek function.

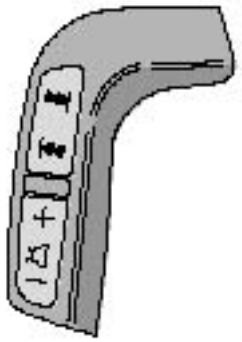

Audio system controls on the steering wheel

Audio system controls on the steering wheel

Station seek up/down

If you have a key pad in the steering wheel press the right or left arrow to switch between preset stations.

Scan function

Press the SCAN button (HU-611) or the SOURCE button (HU-801) to start the station scan function. When a station is found, scanning stops for several seconds, after which scanning will continue.

Press the SCAN or SOURCE button when a station has been found if you would like to listen to that station and to discontinue the scan function.

pg.134 Audio systems HU-611/HU-801 - radio

A - Automatic station preset

This function seeks and stores up to 10 strong AM or FM stations in a separate memory. This function is especially useful in areas where you are not familiar with the radio stations.

1. Press in the "AUTO" button. A number of strong signal stations (max. 10) from the currently selected waveband are now stored automatically in the memory. An "A" and "AUTO" is displayed. If there is no

station with sufficient signal strength "NO STATION" is displayed.

2. Turn "1-20/DISC" button if you wish to change to another of the auto-stored stations.

Another auto-stored station is selected with each turn.

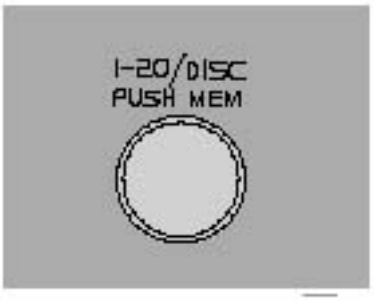

Programming stations

1. Tune in the desired frequency.

2. Press the "1-20/DISC" button. Select a number by turning forwards or backwards. Press again to store the selected frequency and station.

Preset

To choose a pre-set station, turn "1-20/DISC" button to the stored number. The currently selected station is displayed.
Radio Data System (RDS, also referred to as RBDS) - HU-801 only

The HU-801 radio in your car is equipped with an advanced system allowing information from broadcasters to be transmitted visually, as text, together with the audio signal. This information is then decoded by the radio and made available for several new and unique features. **The RDS or Radio Data System operates in the FM band only, and the information transmitted is supplied exclusively by participating broadcasters.** Volvo has no control over the accuracy of the data or information. Please refer to the following pages regarding specific descriptions and operation of these functions.

Volvo was among the first to pioneer this technology throughout Europe and it is slowly making its way to North America. Coverage by local broadcasters may be limited at this time, but as the technology and benefits grow, you will find the radio in your car is equipped to take advantage of this system.

pg.135 Audio systems HU-801 - radio

Traffic information (TP) - HU-801 only

This feature may not be apply in your area and only functions with FM broadcasts.

Push the "TP" button for traffic information from RDS stations. "TP" is displayed when the function is connected.

When the unit is in Cassette or CD mode, the FM radio function will seek in the background for a station with a strong signal broadcasting traffic information. If a cassette or CD are playing when the radio receives a traffic bulletin, that function is interrupted and the bulletin is broadcast with the volume pre-selected for traffic information.

When the bulletin is finished the unit immediately returns to the previously set volume and continues playing the cassette or CD.

· Traffic information can only be heard when is displayed.

· If only TP is displayed, this indicates that no traffic information is being received at the time.

· If you do not wish to listen to an ongoing traffic bulletin, press the "TP" button. The TP function will remain active and the radio will continue to monitor traffic information.

· To turn the TP function off, press the **TP** button. TP is no longer shown in the display.

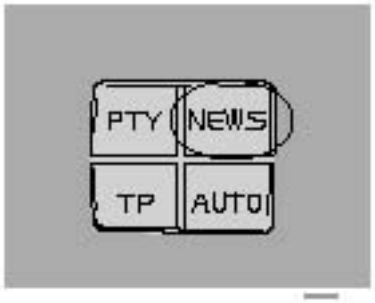

News on/off - HU-801 only

This feature may not be apply in your area and only functions with FM broadcasts.

Press the "NEWS" button to activate the news function. The text NEWS is displayed. Press the "NEWS" button again if you want to switch off the function.

As soon as a news broadcast begins, the news program will interrupt the Cassette, CD or CD changer.

If you do not wish to listen to the news program, press the "NEWS" button again. The news function will remain active and the radio will continue to monitor news programs.

pg.136 Audio systems HU-801 - radio

Program types (HU-801 only)

-

Program type	Text displayed
News	News
Information	Inform
Sports	Sports
Talk	Talk
Rock	Rock
Classic rock	Cls_Rock
Adult hits	Adlt_Hit
Soft rock	Soft_Rck
Top 40	Top_40
Country	Country
Oldies	Oldies
Soft	Soft
Nostalgia	Nostalga
Jazz	Jazz
Classical	Classicl
Rhythm and Blues	R_&_B
Soft Rhythm and Blues	Soft_R&B
Foreign language	Language

Religious music	Rel_Musc
Religious talk	Rel_Talk
Personality	Persnlty
Public	Public
College	College
-	
-	
-	
-	
Weather	Weather

Contents | Top of Page

2 0 0 1
VOLVO
S80

pg.137 AUM (Advaced User Mode) - certain models

AUM (Asvanced User Mode)

· With the radio switched off, press and hold the volume wheel down for at least 5 seconds to start the AUM function.

· Turn the **1-20/DISC** knob to choose an AUM function (see function list on the right).

· When the function has been chosen, the function's current setting flashes. Press the **1-20/DISC** knob to choose an alternative (e.g. ON/OFF, LOW/MID/HIGH, etc., depending on the function).

· Continue to choose function/alternative.

To reset all AUM functions to factory settings, turn the **1-20/** knob until **"SET TO DEFAULT"** is shown in the display, and then press the same knob. All AUM settings are reset to default position and the radio reverts to normal status (music, news, etc.). **To** save any changes and revert to normal position, turn the **1-20/** knob until **"BACK and SAVE"** are shown in the display, and press the same knob. To revert to normal position without saving the changes, turn the **1-20/** knob until **"BACK without SAVE"** is shown in the display, and press the same knob.

AUM functions (starting position "default" is underscored)

The following functions are available on all audio systems:

· SET TO DEFAULT (See left-hand column).

· ASC (Active Sound Control) ON/OFF - The ASC function automatically matches the sound volume to the speed of the car.

· ASC TABLE - Choose level of the ASC function (LOW/MID/HIGH)..

· SRC ON/OFF - Use this function to activate/deactivate the function which reduces the noise in poor reception conditions. The function is normally used when the radio is in AM mode.

· SRC TABLE - Choose level of SRC function (LOW/MID/HIGH).

· TAPE DOLBY ON/OFF - Activates/ deactivates Dolby noise reduction when you listen to a cassette tape (HU 405/605).

· BACK and SAVE (See left-hand column).

· BACK without SAVE (See left-hand column).

The following functions are available on the HU-801 only:

· AF SWITCHING ON/OFF (automatic frequency update) - The AF function ensures that the strongest available transmitter for a program is selected.

· REGIONAL ON/OFF (regional radio program) - This function makes it possible to continue to listen to a regional transmit-ter, even if the signal is weak.

· EON (Enhanced Other Networks) LOCAL/DISTANT - This function determines whether the radio program you are listening to is to be switched off before e.g. a traffic report or news broadcast (if these functions are selected) only if the signal is strong (LOCAL) or whether the radio must also try to capture weaker signals (DISTANT).

· NETWORK ALL/TUNED - With this function you can decide whether the radio program you are listening to is to be switched off before e.g. a traffic report or news broadcast (if these functions are selected) only if the report is on the channel you are listening to (TUNED), or whether the program is to be switched off regardless of which radio channel the report/broadcast is on (ALL).

pg.138 Audio systems HU-801 - radio

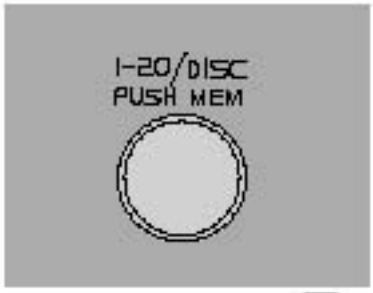

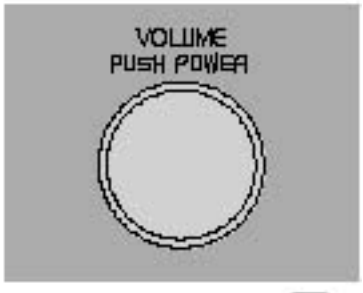

Program type - HU-801 only

The PTY function enables you to select specific types of programs.

To search for a particular program type:

1. Press "PTY" button to initiate the function. The currently tuned station's program type is displayed.
2. Scroll through the list of program types by turning the "1-20/DISC" button.
3. When you have reached the program type you require press the "1-20/DISC" button to begin the search.
4. If the radio finds a station with the selected program type, it sets it. If the radio finds no station with the selected program type, it will return to its previous function. PTY is then in standby mode and remains so until a program of the selected type begins The radio then changes to the station with the selected program type.
5. The PTY symbol is displayed until the radio finds the selected program type and as long as that program is being transmitted.
6. To manually deactivate this function, press the PTY button again. The PTY function is automatically deactivate after it is used once.

certain models

This function can also be used in the CD mode. Steps 1-4 are the same as described to the left. 5. If there is more than one station with the selected program type, you can select using , or the scan button. The PTY function is active until the radio finds the selected program type and as long as the selected station transmits that program type. 6. To return to standby mode, press PTY again. The CD will resume playing until the selected program type is sent again. 7. To deactivate PTY standby, press the PTY button again. The PTY symbol will turn off.

Volume of traffic information/news/PTY -

HU-801 only

If you change the volume when the TP, PTY or NEWS function is active, the new volume setting will be stored automatically.

pg.139 Audio system HU-611/HU-801 - CD player

CD eject button

CD player - on

HU-611: Insert a CD.

HU-801: Insert a CD. If you would like to insert another disc (a maximum of 4 CD's can be inserted in the player), turn the
"1-20/DISC" button so that "CD 2 Load Disc" is displayed. Insert the CD. Repeat this procedure for discs 3 and 4.

Once the disc(s) have been inserted, select the CD function by turning the "SOURCE" knob.

Selecting a disc (HU-801 only)

Turn the "1-20/DISC" knob. The number of the disc and track is displayed.

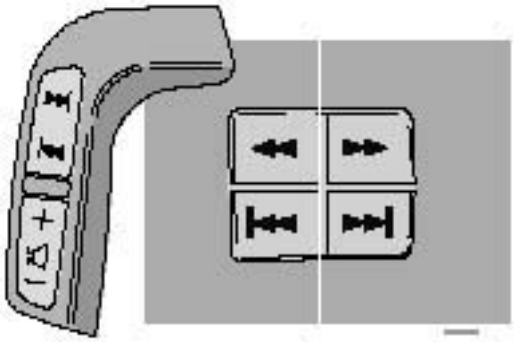

CD eject

HU-611: If you press this button the CD stops playing and the disc is ejected.

HU-801: The CD currently playing will be ejected. If more than one CD has been inserted, turn the "1-20/DISC" to display the number of the CD you would like to eject and press the CD eject button.

NOTE: For traffic safety reasons, the ejected CD must be removed within 12 seconds or it will be

automatically reinserted into the CD player.

Fast winding

Press " " or " " to seek within a track.

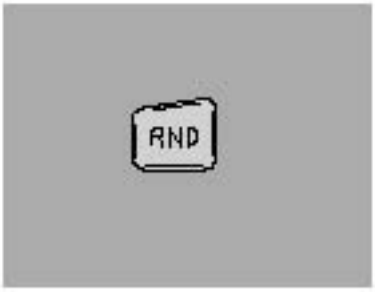

Next/previous track

Press " " to skip to the next track or " " to skip to the previous track. The track number is shown in the display. If you have the key pad in the steering wheel you can also use these arrows in the same way.

Random

Press "RND" to connect the random function. The unit plays tracks from the disc in random order. "RND" (random) is displayed as long as the function is activated.

pg.140 Audio system HU-611/HU-801 - CD changer (option)

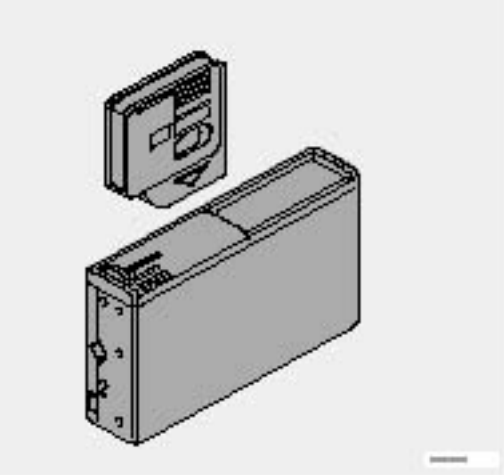

CD changer

The optional CD changer, mounted in the trunk, can accommodate 10 discs. To load the magazine:

· Slide the cover on the CD changer open.

· Press the eject button.

· Pull the magazine out of the changer and insert the discs.

· Press the magazine back into the changer and slide the cover back into place.

Playing a CD

Turn "SOURCE" to activate CD changer mode. The CD changer continues playing the disc and track that was being played most recently. If the CD changer magazine is empty "LOAD MAGAZINE" is displayed.

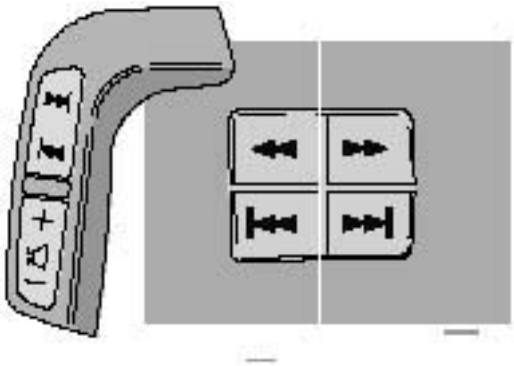

Selecting a disc

Turn the "1-20/DISC" knob. The number of the disc and track is displayed.

Fast winding

Press " ◄◄ " or " ►► " to seek within a track.

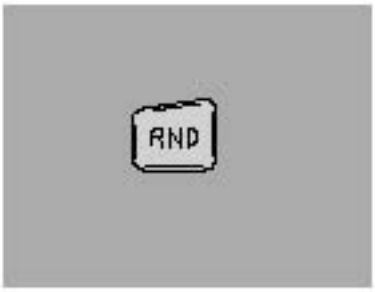

Next/previous track

Press " ⏭ " to skip to the next track or " ⏮ " to skip to the previous track. Disc and track number are displayed. If you have the key pad in the steering wheel you can also use these arrows in the same way.

Random

Press "RND" to connect in the random function. A randomly selected track is chosen from a randomly selected disc. Then a new track is selected in the same way. "RND" (random) is displayed as long as the function is activated.

pg.141 Audio system HU-611 - cassette deck

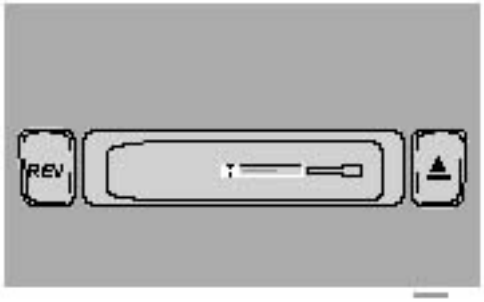

Cassette deck (HU-611 only) - inserting a cassette

Slide a cassette into the slot with the tape to the right (side 1 or A upwards). The ignition key must be in position I or II before a cassette can be inserted. "TAPE A" or "TAPE B" is displayed. When one side has finished playing the unit will automatically begin playing the other side. If a cassette is already inserted in the cassette deck select cassette play by turning the "SOURCE" knob.

Changing tape direction

Press the "REV" button if you wish play the other side of the tape. The side being played is displayed.

Tape eject button

Tape eject

If you press this button the tape stops and the cassette is ejected. To select a new mode (radio, CD) turn the "SOURCE" button. A cassette can be ejected even if the ignition is switched off.

Dolby B Noise reduction

The function is preset. To switch the function off, hold down the " " button until the Dolby symbol in the display goes out. Press the same button again to reactivate the function.

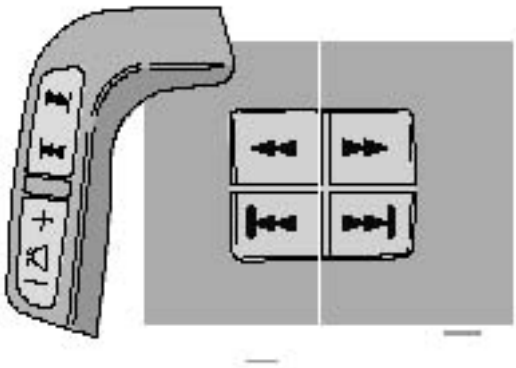

Fast winding

The tape can be wound forward with " " and backwards with " ". During fast winding "FF" (forward) respectively "REW" (backward) is displayed. Fast winding is interrupted if you press the button again.

Next/Previous track

If you press " " button the tape automatically winds forward to the next track. If you press " " button the tape automatically rewinds to the previous track. This feature requires at least a 5 second break between tracks. If you have the key pad in the steering wheel you can also use these

arrows in the same way.

pg.142 Dolby Surround Pro Logic HU-801 (option)

Dolby Surround Pro Logic (HU-801 only)

During CD playback, Dolby Pro Logic Surround Sound, together with the speaker in the center of the dashboard, offers you very clear and realistic sound.

The Dolby unit divides the normal stereo channels from left - right to left - center - right. In addition, ambient surround sound is produced by the rear speakers. This ambient surround sound mirrors the resonance of a recording studio.

Most recordings today are made so that the vocalist/soloist is heard from the center foreground while the orchestra is heard over the entire left-right panorama as well as from behind. This enables the Dolby Surround Pro Logic system to provide a unique listening experience.

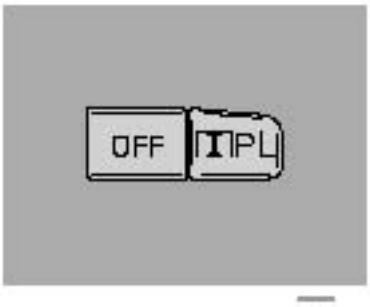

Dolby Surround Pro Logic

To select Dolby Pro Logic during CD playback, press " PL". "Dolby Pro Logic" is displayed. Press "OFF" to return to 2 channel stereo.

pg.143 Dolby Surround Pro Logic HU-801 (option)

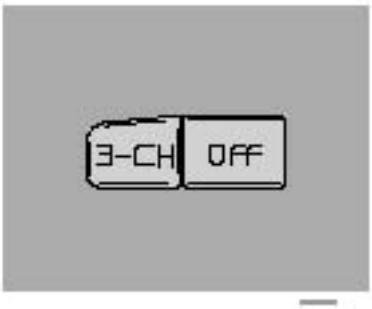

3 channel stereo

To select 3 channel stereo press "3-CH". "3 ch" is displayed. Press "OFF" to return to 2 channel stereo.

Center speaker volume

Set the center speaker volume by pressing the button to extend the control and turning it to the left (quieter) or to the right (louder). A "detent" indicates "normal" volume. Press the button back after setting.

Effect channel volume *

Set the power output of the rear channels by pressing the button to extend the control, pulling it out as far as possible and turning it left or right. A "detent" indicates "normal" power output.

Press the button back after setting (Dolby Surround Pro Logic only).

* The "Effect" button will work only during CD playback in Surround Pro Logic mode.

pg.144 Audio systems - specifications

HU-611/HU-801

Output:	4 x 25 W
(HU-801 optional center speaker)	1 x 25 W plus 4 x 50 W through the supplementary amplifier
Impedance:	4 Ohm.
Voltage required:	12 V, negative ground
Radio	
Frequency range:	
AM	530 - 1710 kHz
FM	87.9 - 107.9 MHz

Alarm (HU-801 only)

"Alarm!" is displayed when an alarm message is sent. The function is used to warn the driver of a serious accident or disaster situation.

Dolby noise reduction is manufactured under license from Dolby Laboratories Licensing Corporation. Dolby and the double D sign are trademarks of Dolby Laboratories Licensing Corporations.

Dolby Pro Logic is the trademark of Dolby Laboratories Licensing Corporation. The Dolby Pro Logic Surround System is manufactured under licence from Dolby Laboratories Licensing Corporation.

CAUTION:

The optional supplementary amplifier (HU-801) may be mounted under the front passenger's seat. If the floor of the car has become soaked for any reason, do not turn on the radio. This would cause damage to the amplifier. Contact a Volvo retailer.

pg.145 Audio systems - general information

Cassettes

· Store cassettes in their cases.

· Do not touch the tape surface with your fingers.

· Tapes should not be exposed to direct sunlight or extreme temperatures.

· Keep tapes away from oil, grease and other contaminants.

· For optimal tape deck performance Volvo does not recommend the use of C-120 tapes.

· Take up slack using a pen or a pencil before inserting a cassette in the cassette slot.

Cassette cleaning

We recommend the use of the Volvo Cleaning Cassette available as a genuine Volvo accessory. Regular use improves sound quality, cleans vital parts and prevents tape tangle.

Compact disc care

· Before using a new disc for the first time, remove any burrs in the center/outer edge by running the stem of a pen or similar object around the hole/edge of the disc.

· Use high quality discs only.

· Keep the discs clean. Wipe them with a soft, clean, lint-free cloth, working from the center outwards. If necessary, dampen the cloth with a neutral soap solution. Dry thoroughly before using.

· Never use cleaning spray or antistatic liquid. Use only cleaners specifically made for CD's.

· Use discs of the correct size only (3.5" discs should never be used).

· Do not put tape or labels on the disc itself.

· Volvo does not recommend the use of plastic outer rings on the disc.

· Condensation may occur on discs/optical components of the changer in cold winter weather. The disc can be dried with a clean, lint-free cloth. Optical components in the CD changer may, however, take up to one hour to dry off.

· Never attempt to play a disc which is damaged in any way.

· When not in use, the discs should be stored in their covers. Avoid storing discs in excessive heat, direct

sunlight or dusty locations.

Contents | Top of Page

2 0 0 1
VOLVO
S80

HomeLink® Universal Transceiver (option)

pg.146 HomeLink® Universal Transceiver (option)

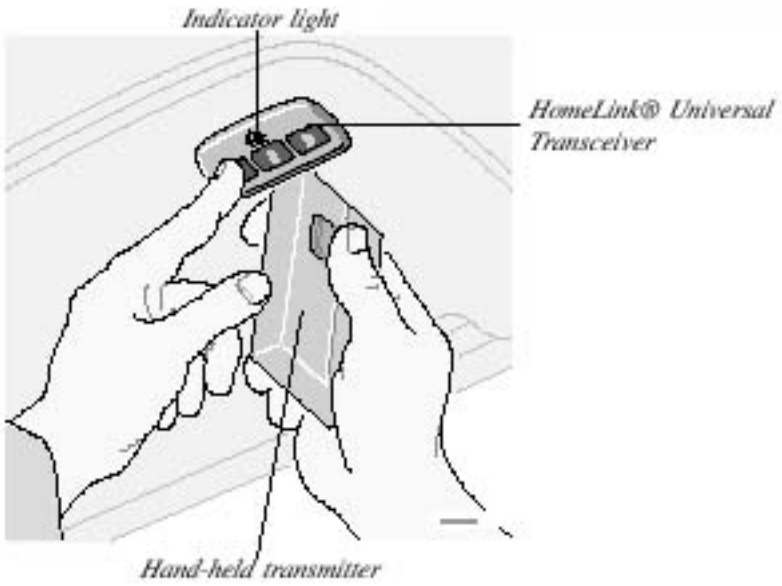

HomeLink® Universal Transceiver

HomeLink® is an advanced system that can be programmed to learn the codes of three different remote controlled-devices (e.g., garage door openers, remote lighting, entry door lock). HomeLink®'s sun visor-mounted transceiver, powered by your car's electrical system, may then be used in place of your hand-held remote controls..

NOTE: As a security precaution, the HomeLink® Universal Transceiver is designed to **not** function if the car has been locked from the *outside*.

Programming the transceiver

1. The ignition switch must be turned to the "accessory" position (II) before programming the HomeLink® Universal Transceiver.

2. Begin by erasing all 3 factory default channels. Hold down the two outside buttons (buttons 1 and 3 in the illustration) on the HomeLink® Universal Transceiver for about 20 seconds, until HomeLink®'s indicator light begins to flash. Then release the buttons.

3. Hold your hand-held transmitter (garage door opener, for example) 2 to 5 in. (5 to 12 cm) away from the HomeLink® surface, keeping the indicator light in view. For placement questions, contact HomeLink® toll-free 1-800-355-3515 (Internet: www.HomeLink.jci.com).

4. Using two hands, push and hold both your hand-held transmitter's button and the transceiver button you wish to program. The indicator light will flash first slowly, then rapidly. Rapid flashing tells you the HomeLink® button has been successfully programmed. Release both buttons.

5. If you are programming a rolling code-equipped device (e.g., garage door opener or entry door lock), refer to "Programming rolling codes" on the next page to complete the programming process. Repeat steps 3 and 4 to program the other two transceiver buttons. If, after several attempts, you are unable to successfully train the HomeLink® Universal Transceiver to learn your hand-held transmitter's signal, contact HomeLink® toll-free 1-800-355-3515 (Internet: www.HomeLink.jci.com).

pg.147 HomeLink® Universal Transceiver (option)

WARNING!

· If you use HomeLink® to open a garage door or gate, be sure no one is near the gate or door while it is in motion.

· Do not use the HomeLink® Universal Transceiver with any garage door opener that lacks safety "stop" and "reverse" features as required by federal safety standards. (This includes any garage door opener model manufactured before April 1, 1982) A garage door opener that cannot "detect" an object, signalling the door to "stop" and "reverse" does not meet current federal safety standards. Using a garage door opener without these features increases the risk of serious injury or death. For more information on this matter, call toll-free 1-800-355-3515 (Internet: www.HomeLink.jci.com).

NOTE - Canadian residents:

During programming, your hand-held transmitter may automatically stop transmitting. To successfully train HomeLink®, continue to hold the HomeLink® button. At the same time, repeatedly press and hold your hand-held transmitter's button at two-second intervals until HomeLink® has learned your transmitter's code. The HomeLink® indicator light will flash first slowly, and then rapidly to indicate

that the button has been successfully programmed..

Programming rolling codes

Determine, in one of the following ways, if your garage door uses a rolling code system and is manufactured after 1996:

· Refer to the garage door opener owner's manual for verification.

· If your hand-held transmitter appears to program the HomeLink® Universal Transceiver but the programmed button does not activate the garage door, your garage door opener may have a rolling code.

· Press the programmed HomeLink® button. If the garage door opener has the rolling code feature, the HomeLink® indicator light flashes rapidly and then glows steadily after approximately 2 seconds.

To train a garage door opener with the rolling code feature, follow these instructions after the transceiver has been programmed (the aid of a second person may make the training quicker and easier):

1. Locate the training button on the *garage door opener motor head unit*. The exact location and color of the button may vary. If you encounter difficulty, refer to the garage door opener owner's manual or call: 1-800-355-3515 (Internet: www.HomeLink.jci.com).

2. Press the "training" button on the garage door opener motor head unit until the "training" light comes on.

3. Firmly press and release the programmed HomeLink® button. Press and release the HomeLink® button a *second* time to complete the training process.
Some garage door openers may require you to do this procedure a *third time* to complete the training.

The programmed button on your HomeLink® Universal Transceiver
should now operate your garage door opener. The original hand-held transmitter can also be used, if necessary, to operate the garage door.

The remaining two HomeLink® buttons can be programmed in the same way. In the event of any problems in programming the HomeLink® Universal Transceiver, call toll-free 1-800-355-3515 (Internet: www.HomeLink.jci.com).

Operating the HomeLink® Universal Transceiver

Once programmed, the HomeLink® Universal Transceiver can be used in place of hand-held transmitters.

To operate, the key must be turned to the "accessory" position (II) or the engine must be running. Press the programmed HomeLink® button to activate the garage door, driveway gate, security lighting, home security system, etc.

Your original hand-held transmitters may, of course, be used at any time.

pg.148 HomeLink® Universal Transceiver (option)

Erasing programmed buttons

Individual buttons cannot be erased. To erase all three programmed buttons:

1. Turn the ignition key to the "accessory" position (II).

2. Hold down the two outside buttons on the HomeLink® Universal Transceiver for about 20 seconds, until HomeLink®'s indicator light begins to flash.

3. Release both buttons.

The HomeLink® buttons can be reprogrammed using the procedures described on the previous pages.

Reprogramming a single HomeLink® button

1. Press and hold the desired HomeLink® button. **Do not release** the button until step 3 has been completed.

2. When the indicator light begins to flash slowly (after approximately 20 seconds), position the hand-held transmitter 2 to 5 in. (5 to 12 cm) away from the HomeLink® surface.

3. Press and hold the hand-held transmitter button. The HomeLink® indicator light will flash first slowly, then rapidly. When the indicator light flashes rapidly, release both buttons.

The previously programmed device has now been erased and the new device can be activated by pressing the HomeLink® button that has just been programmed. This procedure will not affect any other programmed HomeLink® buttons.

NOTE:

· Retain the original transmitter(s) for future programming procedures (i.e., if you purchase a new car).

· For your own security, erase all programmed buttons on the HomeLink® Universal Transceiver when you sell your car.

· Metallic sun protection films should not be used on any windows in a car equipped with HomeLink® Universal Transceiver. This could interfere with the transceiver's function.

Contents | Top of Page

2 0 0 1
VOLVO
S80

Index

pg.162 Index

A

ABS.....17
ABS - warning light.....25
Accessory lights.....27
Adjusting the steering wheel.....32
Advanced User Mode (AUM) - radio.....137
Air conditioning.....41, 42, 43, 45
Air pump system.....110
Air vents.....40
Airbag (SIPS).....8
Airbag (SRS).....4
Alarm.....60, 61
Alarm - "panic" function.....60
ALR/ELR.....14
Anti-lock Brake System (ABS).....17
Anti-lock Brake System - warning light.....25
Antifreeze.....80, 110
Approach lighting.....56
Ashtrays.....34
Audio systems.....129
..cassette deck.....141

..CD player.....139
..HU-611 - overview.....130
..HU-801 - overview.....131
..radio.....134
..specifications.....144
AUM (Advanced User Mode) - radio.....137
Automatic car washing.....105
Automatic locking.....58
Automatic Locking Retractor (ALR).....14
Automatic transmission
..Geartronic.....69, 70
..Kickdown.....69
..Specifications.....124
Auxiliary socket.....27, 34

B

Backrests, rear seat - folding.....54
Battery.....80, 127
Battery maintenance.....117, 118
Replacing the battery.....118
Ventilation hose.....118
Blinds - rear/side rear windows.....38
Booster cushion.....13, 15
Booster cushion - integrated.....13
Brake failure warning light 24
Brake fluid.....116, 125
Brake system.....16
Break-in period.....64
Bulbs (list).....127
Bulbs - replacing.....96-102

C

Capacities (oils and fluids).....121, 125
Cargo net in trunk.....53

Catalytic converters - three-way.....82
Center console - switches.....27
Center head restraint - rear seat.....3
Central locking buttons.....59
Chains - winter driving.....85
Changing wheels.....88, 89
Child booster cushion 13, 15
Child restraint anchorages 12
Child safety.....12, 13, 14, 15
Child safety locks - rear doors.....62
Climate controls.....41, 42, 43, 45
Climate system - general information.....44
Clock.....23
Coat hanger.....49
Cold weather driving.....80
Combination filter.....41, 45
Coolant.....110, 125
Cooling system.....71, 125
Courtesy light.....50
Courtesy lights (front) - replacing.....102
Courtesy lights - exterior.....56
Cruise control.....29
Cup holder - opening.....52

D

Dimensions.....123
Direction indicator bulbs (front).....97
Direction indicators.....31
Distributor ignition system.....126
Door step courtesy lights - replacing.....100
Doors and locks.....56
Drive belt.....110
Driving economy.....71

Driving mode indicator.....23

Driving mode W.....68, 70, 80

Driving with trunk open.....72

E

Economical driving.....71

Electrical system.....127

Electrical system - general information.....72

Electrically operated front seats.....48

Electrically operated sideview mirrors.....36

Electrically operated sun roof.....37

Electrically operated windows.....35

Electronic Brake Force Distribution.....17

Electronic Climate Control

(ECC).....41, 42, 43, 45

Emergency Locking Retractor (ELR).....14

Emergency towing.....74, 75

Emergency warning flashers.....33

Emissions systems.....109

Engine - specifications.....124

Engine - starting.....66

Engine compartment.....113

Engine oil.....64, 80, 114, 115, 125

Exterior courtesy lights.....56

Exterior features - overview.....21

F

Fog light - rear.....25, 30

Fog lights - front.....30

Folding head restraints.....27

Folding passenger's seat backrest.....49

Folding rear seat backrests 54

Folding sideview mirrors.....27

Front airbags - SRS.....4-7

Front airbags - SRS - warning light.....24

Front courtesy lights - replacing.....102

Front fog lights.....30

Front fog lights - replacing 99

Front reading lights.....50

Front seats - adjusting.....48

Front seats - heated.....33

Front suspension.....126

Fuel.....64, 125

Fuel filler cap.....65

Fuel filler door.....65

Fuel gauge.....23

Fuel requirements.....64

Fuel system.....109, 126

Fuel/emissions systems.....109

Fuses.....92, 93, 94

G

Gas cap.....65

Gasoline.....64

Gear indicator.....23

Gear ratios.....124

Geartronic (automatic transmission).....69, 70

Generator.....127

Generator warning light.....24

H

Hand brake.....34

Handling.....72

Hazard warning flashers.....33

Head restraint - center rear.....3

Head restraints, rear - folding.....27

Headlight bulbs - replacing.....96

Headlight wiper blades - replacing.....119

Headlights.....30

Heated front seats.....33

Heated rear window.....33

Heated sideview mirrors.....33

Heating.....41, 42, 43, 45

Hoisting the car.....112

Home Safe System.....56

HomeLink¨ 146-148

Hood - opening.....113

I

Ignition switch.....32

Immobilizer (start inhibitor).....56,66

Indicator lights.....24, 25

Inflatable curtain (IC).....9

Instrument illumination.....30

Instrument panel.....23

Instruments.....22

Integrated booster cushion 13

Interior Air Quality system 45

Interior features - overview.....20

Interior lighting.....50

Isofix fasteners.....12

J

Jack.....53, 88, 89

Jump starting.....79

K

Key - removing from ignition switch.....66

Keyless entry system.....57, 58

Keyless entry system - replacing batteries.....58

Keylock.....66

Keys.....56

Kickdown.....69

L

Label information.....122

License plate lights - replacing.....100

Lifting the car.....112

Lights - accessory.....27

Load carriers.....73

Locking - automatic.....58

Locking and unlocking the car.....56

Locking steering wheel.....32

Long distance trip.....81

Long loads.....49, 54

M

Maintenance schedule.....107, 108

Maintenance service.....106

Malfunction indicator lamp.....25

Memory function - front seats.....48

Mirrors.....36

Mirrors, sideview - folding 27

Mirrors, sideview - memory function.....36

O

Occupant safety.....11

Octane rating.....64

Odometer.....23

Oil - engine.....64, 80, 114, 115, 125

Oil pressure warning light 24

Opening the hood.....113

P

Paint touch-up.....103

Panic function (alarm).....60

Parking brake.....34

Parking brake reminder light.....24

Parking lights.....30

Passenger's seat backrest - folding.....49

Polishing.....105

Power seats.....48

Power steering - speed-sensitive.....72

Power steering fluid 116, 125

Power windows.....35

PROPOSITION 65 WARNING.....117

R

Reading lights - front/rear 50

Rear door step lights - replacing.....100

Rear fog light.....25, 30

Rear reading lights.....50

Rear seat backrests - folding.....54

Rear suspension.....126

Rear window - heated.....33

Rearview mirror.....36

Refrigerant.....44, 125

Refueling.....65

Remote control - keyless entry system.....57

Remote keyless entry system.....57

Remote keyless entry system - replacing batteries.....58

Replacing bulbs.....96-102

Replacing fuses.....92

Replacing wiper blades.....119

Reporting safety defects.....11

Road assistance.....128

Roadholding.....72

Roof load - maximum.....123

Roof racks.....73

S

Safety defects - reporting.....11

Safety locks - child.....62

Seat belt maintenance.....11

Seat belts.....2, 3, 14

Seat belts - cleaning.....105

Seats - front.....48

Servicing.....111, 112

Shiftlock.....66, 67, 69

Side direction indicator - replacing.....99

Side impact airbag system (SIPS).....8

Side marker lights - replacing.....101

Sideview mirrors.....36

Sideview mirrors - folding 27

Sideview mirrors - heated.....33

Sideview mirrors - memory function.....36

Snow chains.....85

Snow tires.....85

Spare tire..... 53, 86

Spark plugs.....126

Specifications.....124

Speed-sensitive power steering.....72

SRS.....6

SRS diagnostic system.....24

Stability Traction Control (STC).....18, 27

Start inhibitor (immobilizer).....56, 66

Starting the engine.....66

Steering wheel adjustment 32

Steering wheel lock.....32

Storage compartment in center console.....52

Storage compartments.....51

Studded tires.....85

Sun blinds.....38

Sun roof.....37

Supplemental Restraint System.....4, 24

Suspension.....126

Switches in center console 27

T

Tachometer.....23

Tail light bulbs - replacing 98

Temperature gauge.....23

Temporary spare tire.....86

Text window.....26

Three-way catalytic converters.....82

Tire pressure.....86

Tires.....72, 84, 85, 86, 87

Tires - changing.....88, 89

Tool bag.....53

Towing a trailer.....76

Towing eyelet.....74

Towing the car.....74, 75

Trailer towing.....76

Trailer weight - maximum.....123

Transmission - automatic.....67, 68, 69, 70

Transmission - specifications.....124

Transmission fluid (automatic).....125

Trip computer.....28

Trip odometer.....23

Trunk - unlocking with master key.....59

Trunk lights - replacing.....101

Trunk lock switch.....27

Turn signals.....31

U

Uniform tire quality grading.....87

Unlocking the trunk with key.....59

Upholstery - cleaning.....105

V

Vanity mirror lights - replacing.....99

Warning flashers.....33

Washer fluid reservoir.....125

Vehicle Identification Number (VIN).....122

Vehicle loading.....126

Ventilation.....40

Viscosity.....114

Volumes (oils and fluids) 125

Volvo On Call.....128

W

Warning light - center.....24

Warning lights.....24, 25

Warranty.....106

Washer fluid reservoir.....112

Washer fluid solvent.....80

Washing the car.....104, 105

Waxing.....105

Weight distribution.....72

Weights.....123

Wheels - changing.....88, 89

Wheels and tires.....84, 85, 86, 87, 88, 89

Whiplash Protection System (WHIPS).....10

Windows - electrically operated.....35

Windshield washer solvent 80

Windshield wiper blades - replacing.....119

Windshield wipers/washers.....31

Winter driving.....80

Winter tires.....85

Winter/Wet driving mode.....68, 70, 80

Wiper blades - replacing.....119

Contents | Top of Page