TIMING BELT

EM0AC-02

COMPONENTS

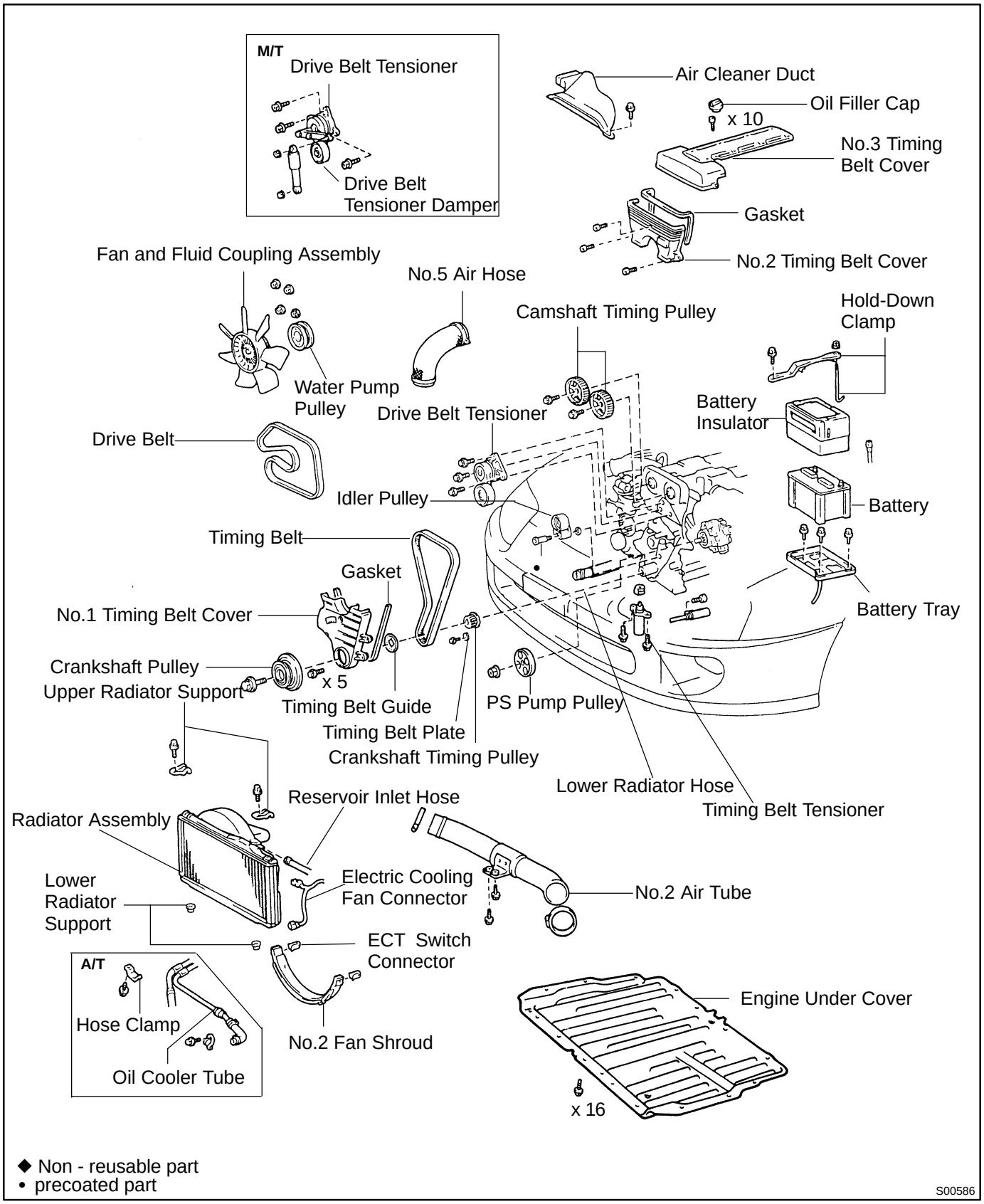

CYLINDER HEAD

EM0AG-02

COMPONENTS

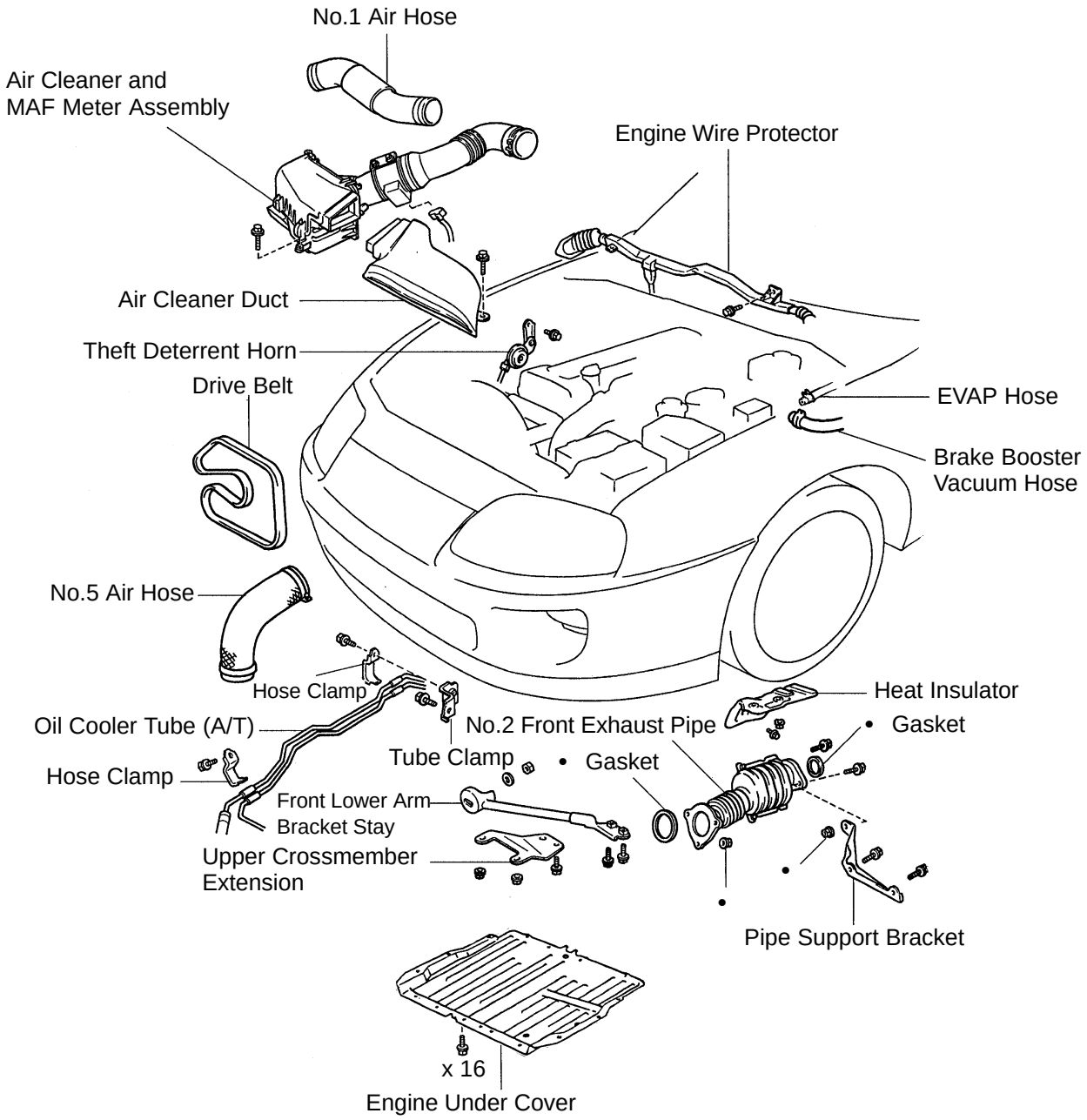

• Non-reusable part

Z13597

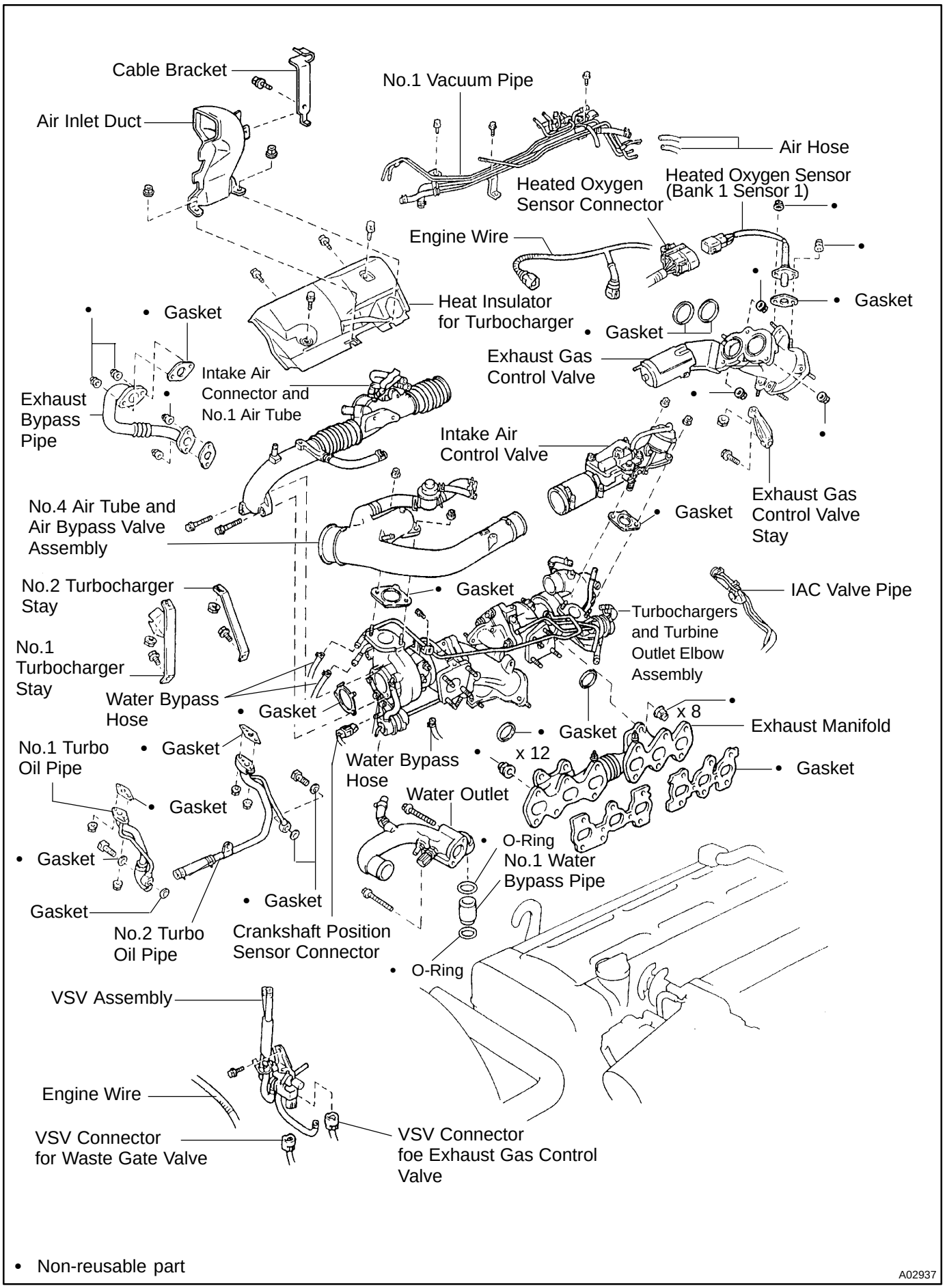
Cable Bracket
Air Inlet Duct
No.1 Vacuum Pipe
Air Hose
Heated Oxygen Sensor Connector
Heated Oxygen Sensor (Bank 1 Sensor 1)
Engine Wire
Heat Insulator for Turbocharger
Gasket
Exhaust Gas Control Valve
Intake Air Connector and No.1 Air Tube
Exhaust Bypass Pipe
Intake Air Control Valve
Exhaust Gas Control Valve Stay
No.4 Air Tube and Air Bypass Valve Assembly
No.2 Turbocharger Stay
No.1 Turbocharger Stay
IAC Valve Pipe
Turbochargers and Turbine Outlet Elbow Assembly
Water Bypass Hose
x 8
Exhaust Manifold
x 12
No.1 Turbo Oil Pipe
Water Outlet
O-Ring
No.1 Water Bypass Pipe
No.2 Turbo Oil Pipe
Crankshaft Position Sensor Connector
VSV Assembly
Engine Wire
VSV Connector for Waste Gate Valve
VSV Connector foe Exhaust Gas Control Valve
• Non-reusable part
A02937

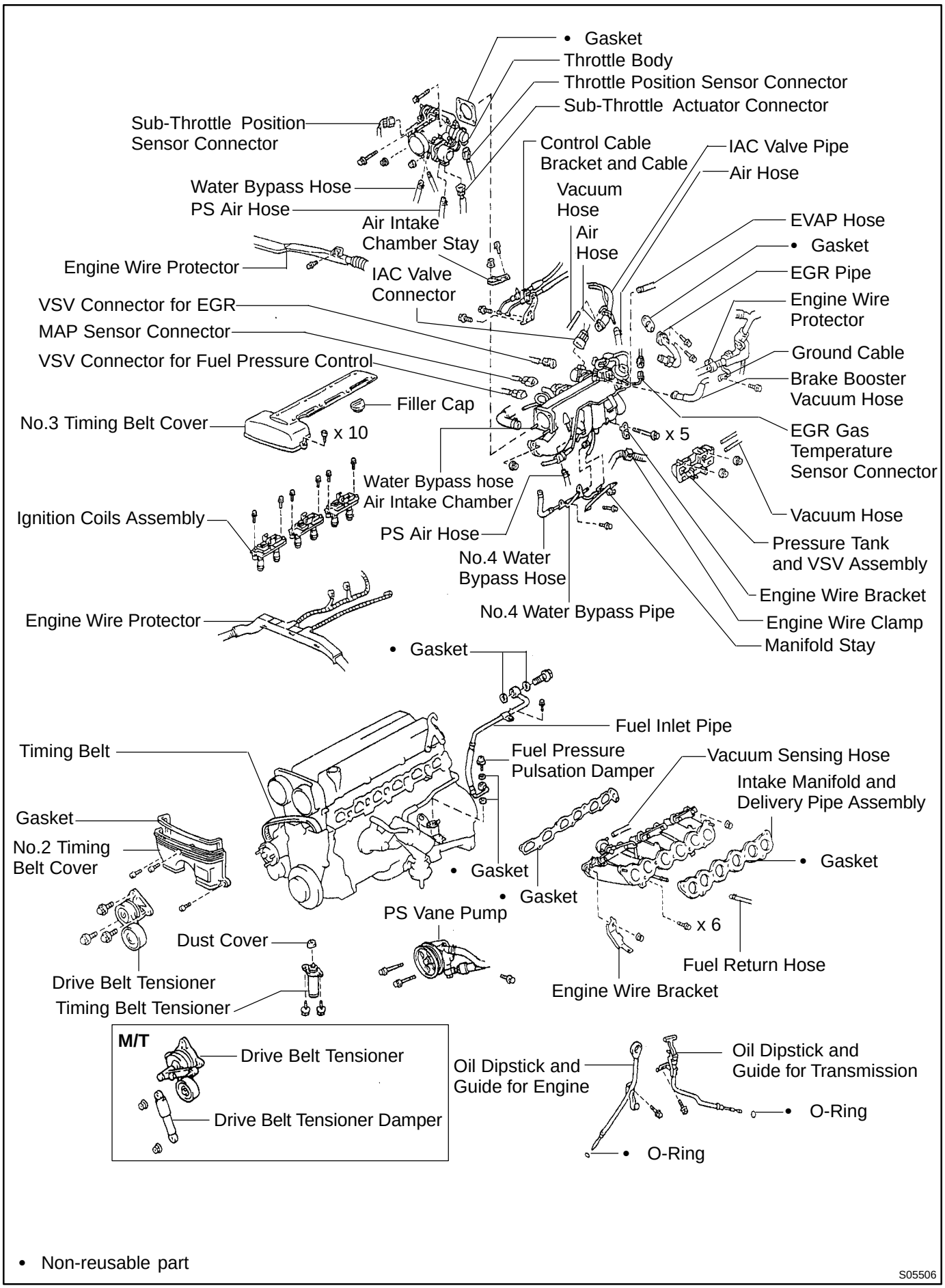
• Gasket
Throttle Body
Throttle Position Sensor Connector
Sub-Throttle Actuator Connector
Sub-Throttle Position Sensor Connector
Control Cable Bracket and Cable
IAC Valve Pipe
Air Hose
Water Bypass Hose
PS Air Hose
Vacuum Hose
Air Intake Chamber Stay
Air Hose
EVAP Hose
• Gasket
Engine Wire Protector
IAC Valve Connector
EGR Pipe
VSV Connector for EGR
Engine Wire Protector
MAP Sensor Connector
Ground Cable
VSV Connector for Fuel Pressure Control
Brake Booster Vacuum Hose
Filler Cap
No.3 Timing Belt Cover
x 10
x 5
EGR Gas Temperature Sensor Connector
Water Bypass hose
Air Intake Chamber
Ignition Coils Assembly
Vacuum Hose
PS Air Hose
Pressure Tank and VSV Assembly
No.4 Water Bypass Hose
Engine Wire Bracket
Engine Wire Protector
No.4 Water Bypass Pipe
Engine Wire Clamp
Manifold Stay
• Gasket
Fuel Inlet Pipe
Timing Belt
Fuel Pressure Pulsation Damper
Vacuum Sensing Hose
Intake Manifold and Delivery Pipe Assembly
Gasket
No.2 Timing Belt Cover
• Gasket
• Gasket
• Gasket
PS Vane Pump
x 6
Dust Cover
Fuel Return Hose
Drive Belt Tensioner
Engine Wire Bracket
Timing Belt Tensioner
M/T
Drive Belt Tensioner
Drive Belt Tensioner Damper
Oil Dipstick and Guide for Engine
Oil Dipstick and Guide for Transmission
• O-Ring
• O-Ring
• Non-reusable part
S05506

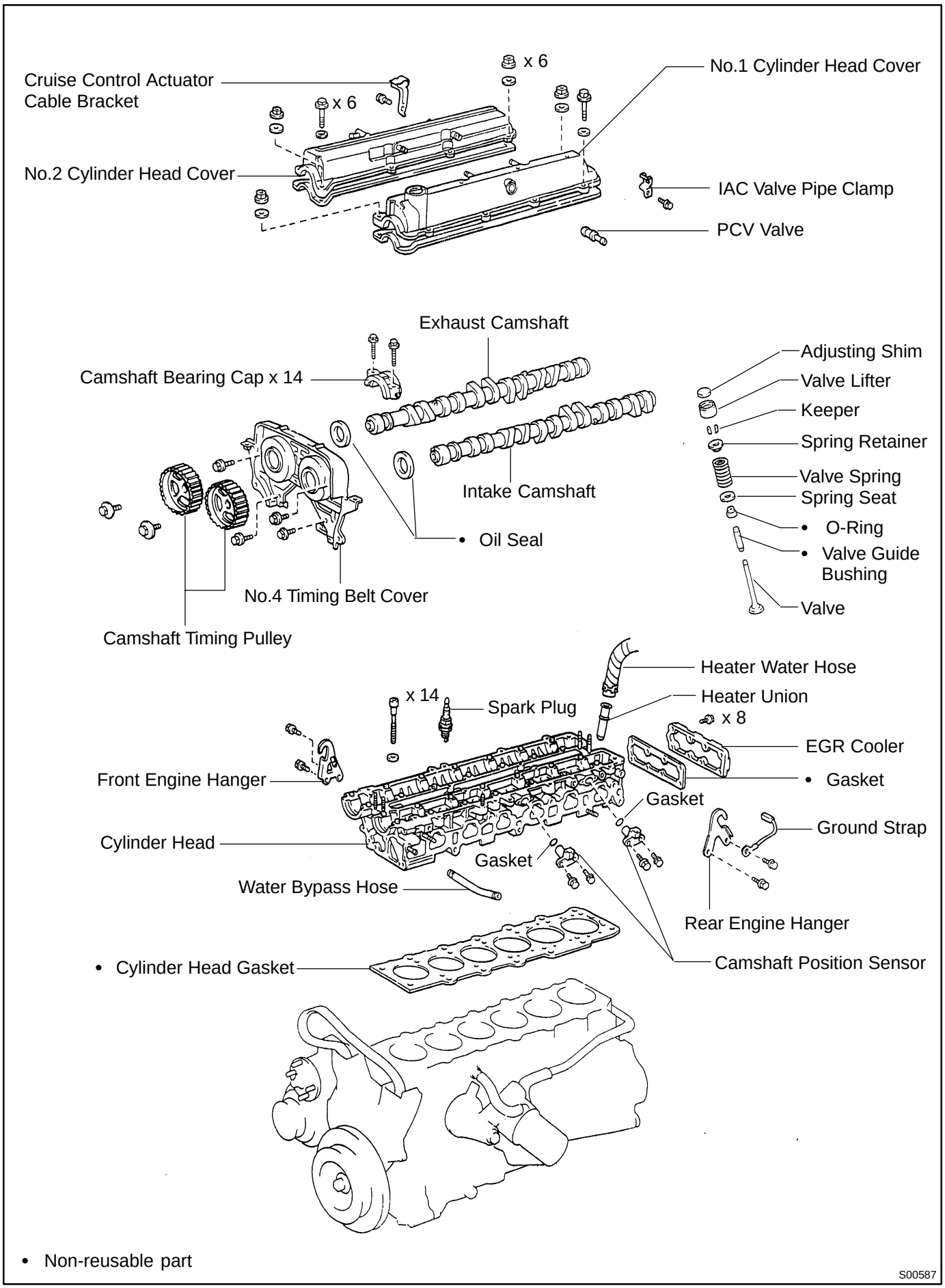

• Non-reusable part

S00587

EM0AI-02

DISASSEMBLY

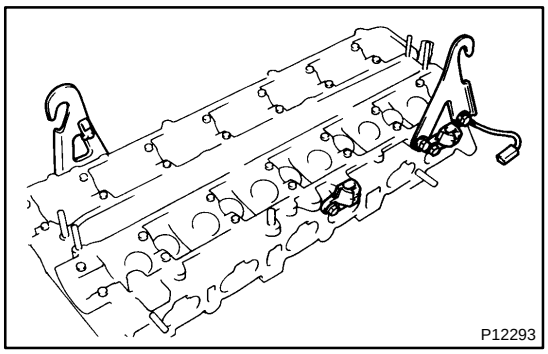

1. REMOVE ENGINE HANGERS AND GROUND STRAP

2. REMOVE CAMSHAFT POSITION SENSORS

3. REMOVE EGR COOLER

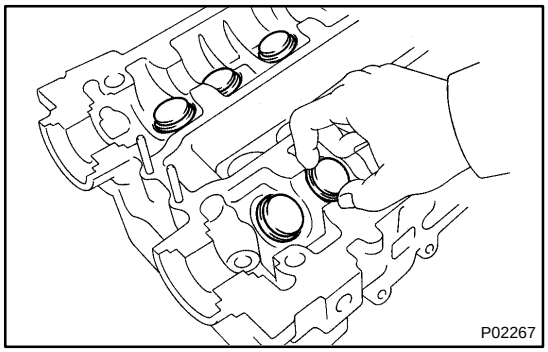

4. REMOVE VALVE LIFTERS AND SHIMS

HINT:

Store the valve lifters and shims in correct order.

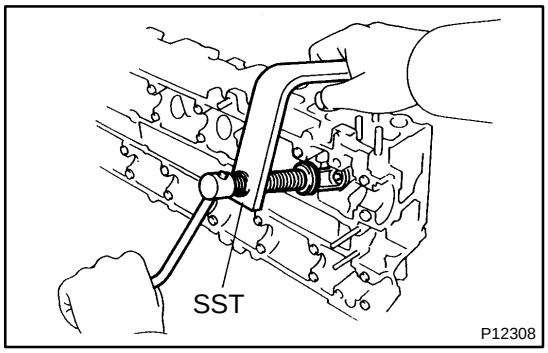

5. REMOVE VALVES

(a) Using SST, compress the valve spring and remove the 2 keepers.

SST 09202-70020 (09202-00010)

(b) Remove the spring retainer, valve spring, valve and spring seat.

HINT:

Store the valves, valve springs, spring seats and spring retainers in correct order.

(c) Using needle-nose pliers, remove the oil seal.

EM0AJ-02

INSPECTION

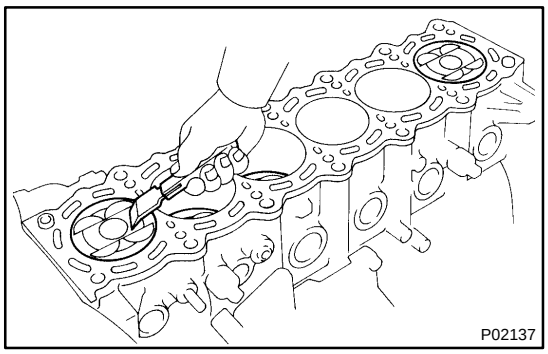

1. CLEAN TOP SURFACES OF PISTONS AND CYLINDER BLOCK

(a) Turn the crankshaft, and bring each piston to top dead center (TDC). Using a gasket scraper, remove all the carbon from the piston top surface.

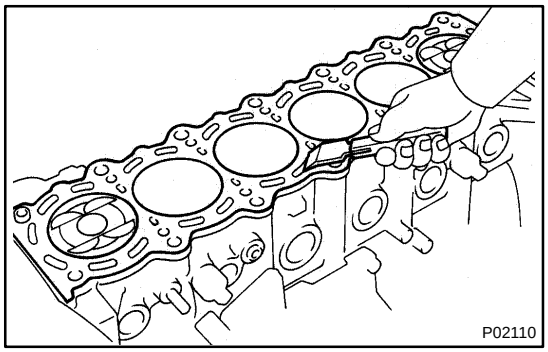

(b) Using a gasket scraper, remove all the gasket material from the top surface of the cylinder block.

(c) Using compressed air, blow carbon and oil from the bolt holes.

CAUTION:

Protect your eyes when using high pressure-compressed air.

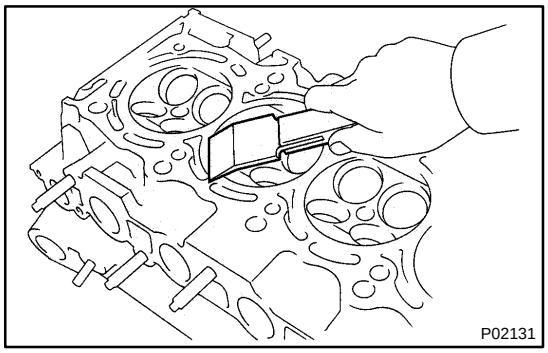

2. REMOVE GASKET MATERIAL

Using a gasket scraper, remove all the gasket material from the cylinder block surface.

NOTICE:

Be careful not to scratch the cylinder block contact surface.

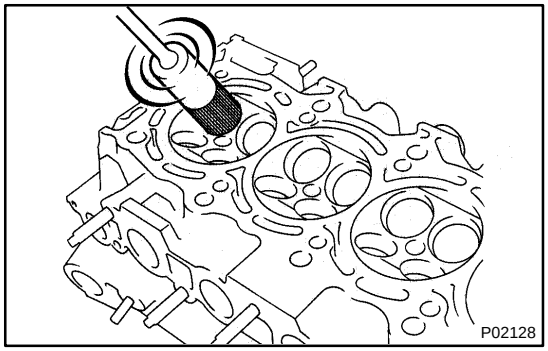

3. CLEAN COMBUSTION CHAMBERS

Using a wire brush, remove all the carbon from the combustion chambers.

NOTICE:

Be careful not to scratch the cylinder block contact surface.

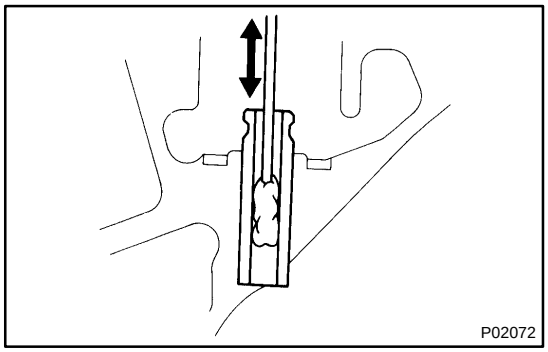

4. CLEAN VALVE GUIDE BUSHINGS

Using a valve guide bushing brush and solvent, clean all the guide bushings.

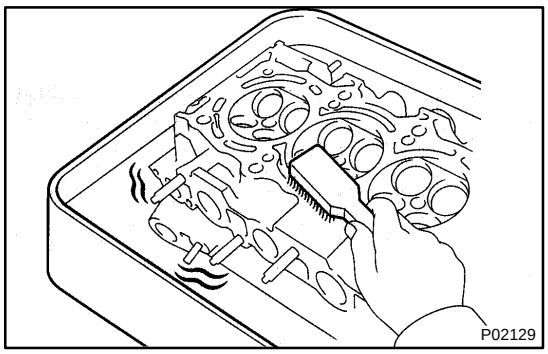

5. CLEAN CYLINDER HEAD

Using a soft brush and solvent, thoroughly clean the cylinder head.

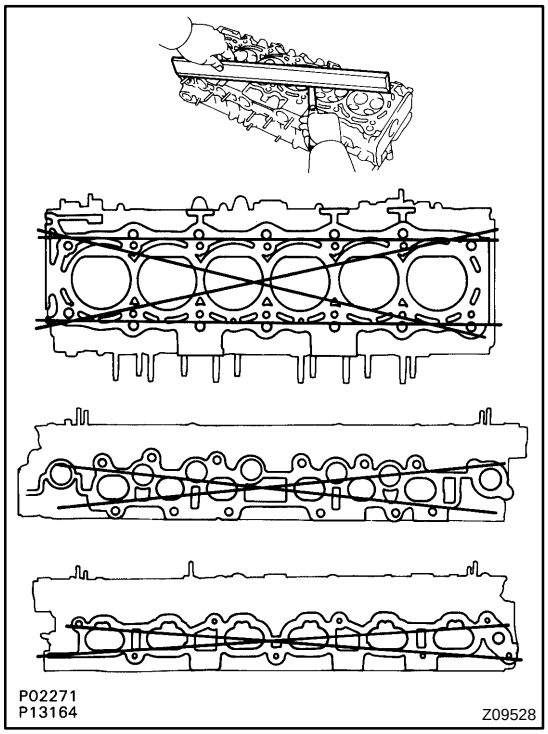

6. INSPECT FOR FLATNESS

Using precision straight edge and feeler gauge, measure the surfaces contacting the cylinder block, intake and exhaust manifolds for warpage.

Maximum warpage: 0.10 mm (0.0039 in.)

If warpage is greater than maximum, replace the cylinder head.

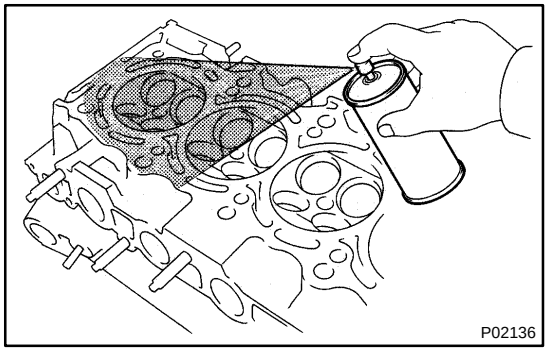

7. INSPECT FOR CRACKS

Using a dye penetrant, check the combustion chamber, intake ports, exhaust ports and cylinder block surface for cracks.
If cracked, replace the cylinder head.

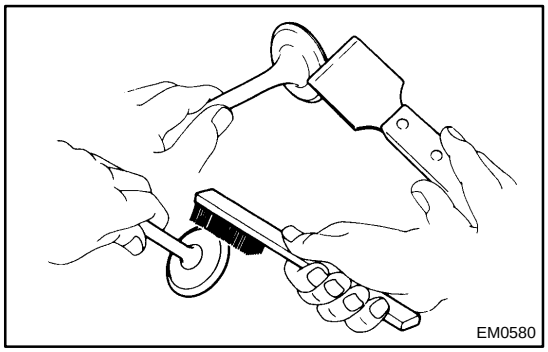

8. CLEAN VALVES

(a) Using a gasket scraper, chip off any carbon from the valve head.

(b) Using a wire brush, thoroughly clean the valve.

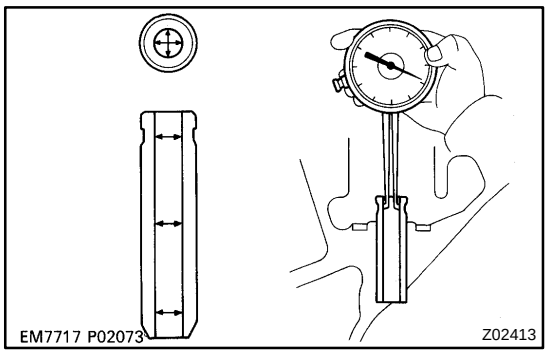

9. INSPECT VALVE STEMS AND GUIDE BUSHINGS

(a) Using a caliper gauge, measure the inside diameter of the guide bushing.
Bushing inside diameter:
6.010 - 6.030 mm (0.2366 - 0.2374 in.)

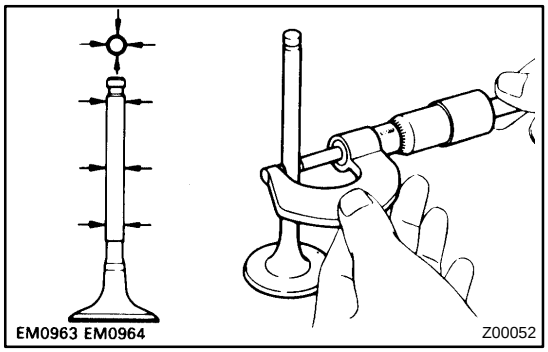

(b) Using a micrometer, measure the diameter of the valve stem.
Valve stem diameter:
Intake 5.970 - 5.985 mm (0.2350 - 0.2356 in.)
Exhaust 5.965 - 5.980 mm (0.2348 - 0.2354 in.)

(c) Subtract the valve stem diameter measurement from the guide bushing inside diameter measurement.
Standard oil clearance:
Intake 0.025 - 0.060 mm (0.0010 - 0.0024 in.)
Exhaust 0.030 - 0.065 mm (0.0012 - 0.0026 in.)
Maximum oil clearance:
Intake 0.08 mm (0.0031 in.)
Exhaust 0.10 mm (0.0039 in.)

If the clearance is greater than maximum, replace the valve and guide bushing.

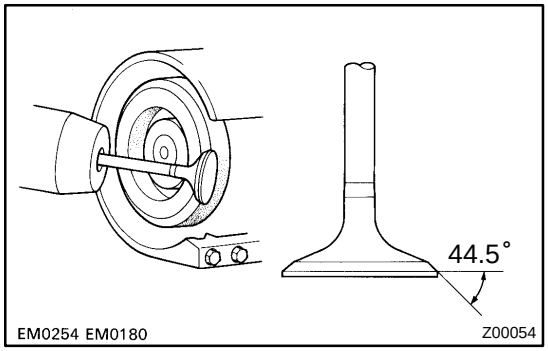

10. INSPECT AND GRIND VALVES

(a) Grind the valve enough to remove pits and carbon.

(b) Check that the valve is ground to the correct valve face angle.
Valve face angle: 44.5°

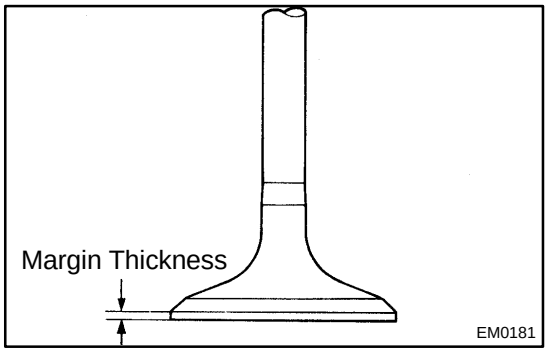

(c) Check the valve head margin thickness.
Standard margin thickness:
0.8 - 1.2 mm (0.031 - 0.047 in.)
Minimum margin thickness:
0.5 mm (0.020 in.)

If the margin thickness is less than minimum, replace the valve.

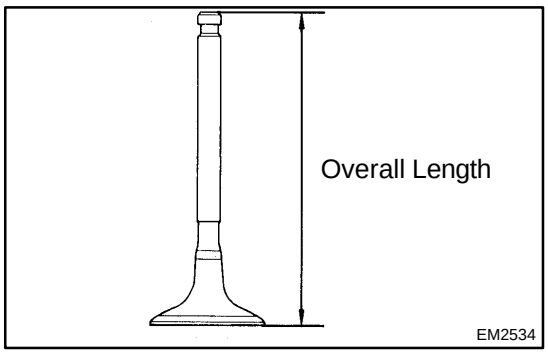

(d) Check the valve overall length.
Standard overall length:
Intake 98.29 - 98.79 mm (3.8697 - 3.8894 in.)
Exhaust 98.84 - 99.34 mm (3.8913 - 3.9110 in.)
Minimum overall length:
Intake 98.19 mm (3.8657 in.)
Exhaust 98.74 mm (3.8874 in.)
If the overall length is less than minimum, replace the valve.

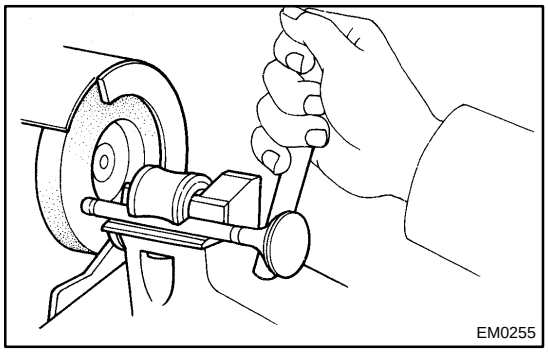

(e) Check the surface of the valve stem tip for wear.
If the valve stem tip is worn, resurface the tip with a grinder or replace the valve.
NOTICE:
Do not grind off more than the minimum overall length.

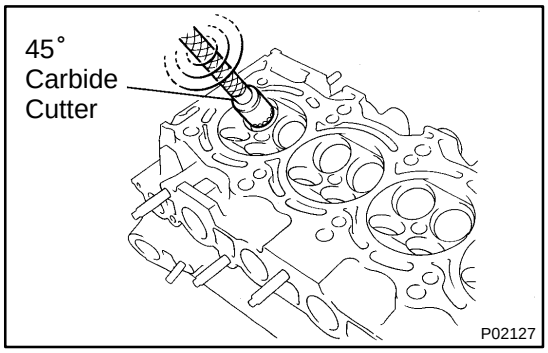

11. INSPECT AND CLEAN VALVE SEATS
(a) Using a 45° carbide cutter, resurface the valve seats. Remove only enough metal to clean the seats.

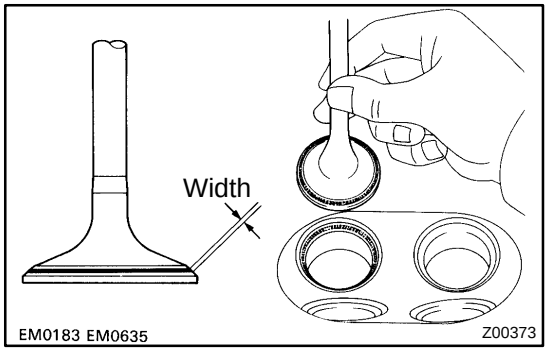

(b) Check the valve seating position.
Apply a thin coat of prussian blue (or white lead) to the valve face. Lightly press the valve against the seat. Do not rotate the valve.
(c) Check the valve face and seat for the following:
- If blue appears 360° around the face, the valve is concentric. If not, replace the valve.
- If blue appears 360° around the valve seat, the guide and face are concentric. If not, resurface the seat.
- Check that the seat contact is in the middle of the valve face with the following width:

Intake 1.0 - 1.4 mm (0.039 - 0.055 in.)
Exhaust 1.2 - 1.6 mm (0.047 - 0.063 in.)
If not, correct the valve seats as follows:
- If the seating is too high on the valve face, use 15° and 45° cutters to correct the seat.

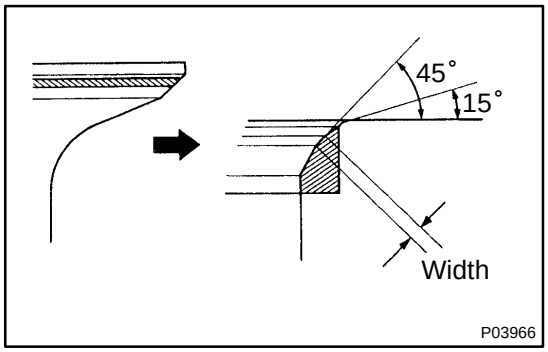

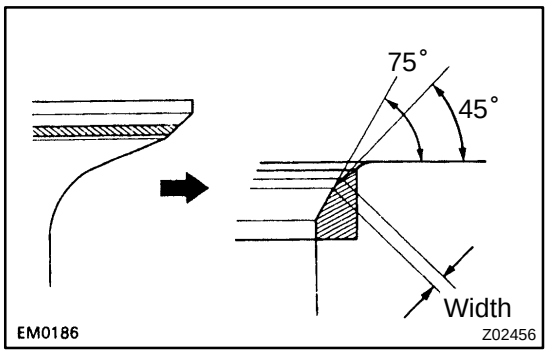

- If the seating is too low on the valve face, use 75° and 45° cutters to correct the seat.

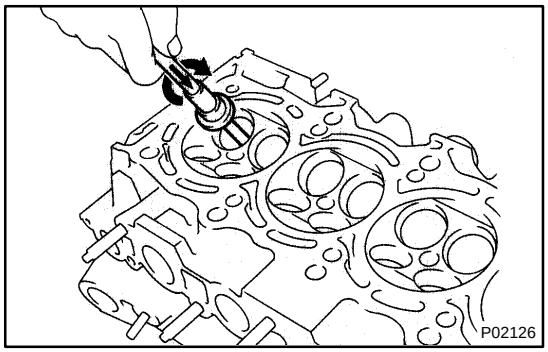

(d) Hand-lap the valve and valve seat with an abrasive compound.

(e) After hand-lapping, clean the valve and valve seat.

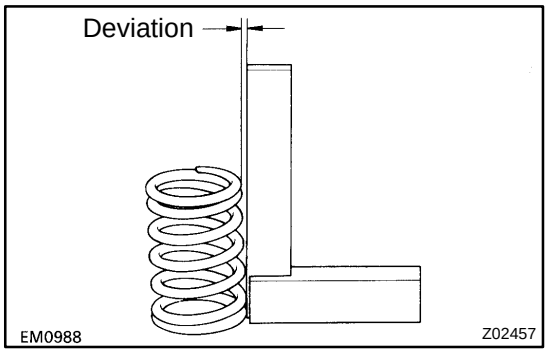

12. INSPECT VALVE SPRINGS

(a) Using a steel square, measure the deviation of the valve spring.

Maximum deviation: 2.0 mm (0.079 in.)

If deviation is greater than maximum, replace the valve spring.

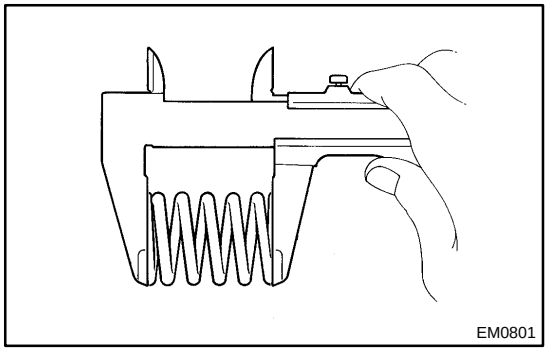

(b) Using vernier calipers, measure the free length of the valve spring.

Free length: 41.70 mm (1.6417 in.)

If the free length is not as specified, replace the valve spring.

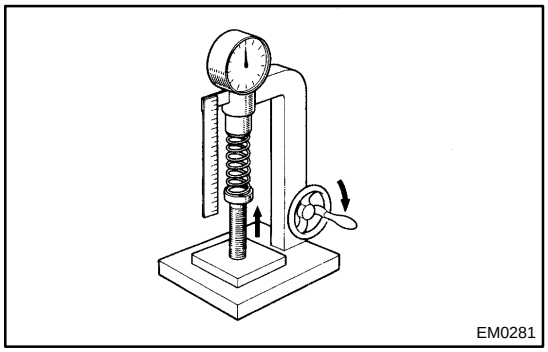

(c) Using a spring tester, measure the tension of the valve spring at the specified installed length.

Installed tension:
186 - 206 N (19.0 - 21.0 kgf, 42 - 46 lbf)
at 34.5 mm (1.358 in.)

If the installed tension is not as specified, replace the valve spring.

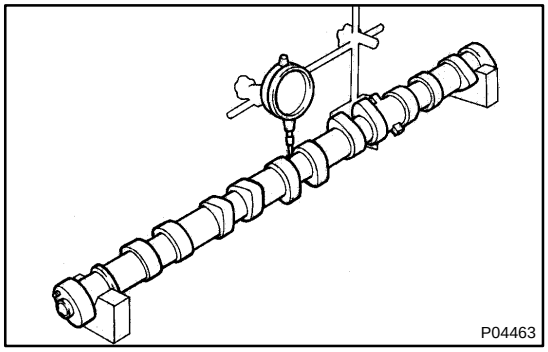

13. INSPECT CAMSHAFT FOR RUNOUT

(a) Place the camshaft on V-blocks.

(b) Using a dial indicator, measure the circle runout at the center journal.

Maximum circle runout: 0.08 mm (0.0031 in.)

If the circle runout is greater than maximum, replace the camshaft.

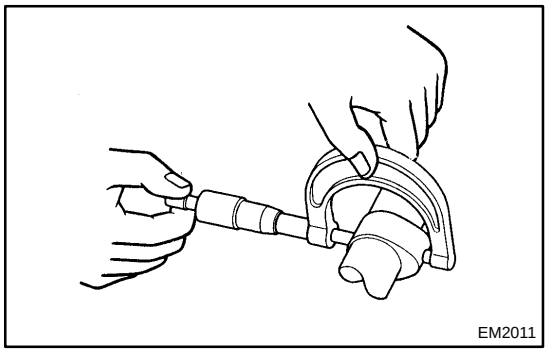

14. INSPECT CAM LOBES

Using a micrometer, measure the cam lobe height.

Standard cam lobe height:
Intake 44.570 - 44.670 mm (1.7547 - 1.7587 in.)
Exhaust 44.770 - 44.870 mm (1.7626 - 1.7665 in.)
Maximum cam lobe height:
Intake 44.42 mm (1.7488 in.)
Exhaust 44.62 mm (1.7567 in.)

If the cam lobe height is less than minimum, replace the camshaft.

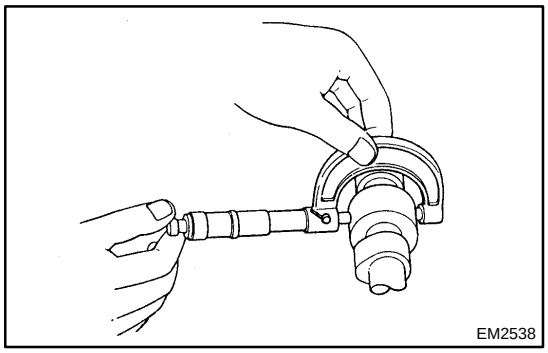

15. INSPECT CAMSHAFT JOURNALS

Using a micrometer, measure the journal diameter.

Journal diameter:
28.949 - 28.965 mm (1.1397 - 1.1404 in.)

If the journal diameter is not as specified, check the oil clearance.

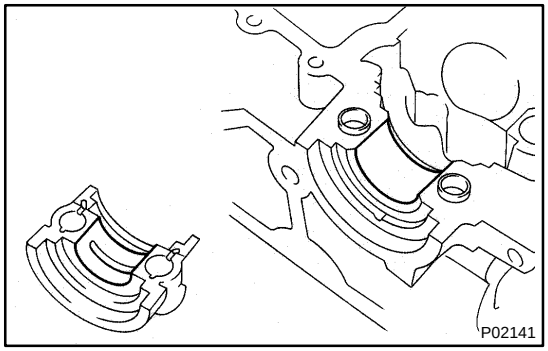

16. INSPECT CAMSHAFT BEARINGS

Check the bearings for flaking and scoring.

If the bearings are damaged, replace the bearing caps and cylinder head as a set.

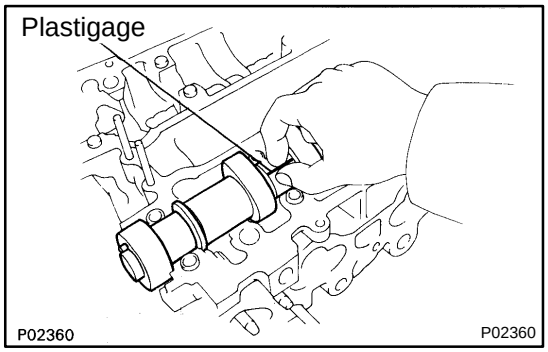

17. INSPECT CAMSHAFT JOURNAL OIL CLEARANCE

(a) Clean the bearing caps and camshaft journals.

(b) Place the camshafts on the cylinder head.

(c) Lay a strip of Plastigage across each of the camshaft journals.

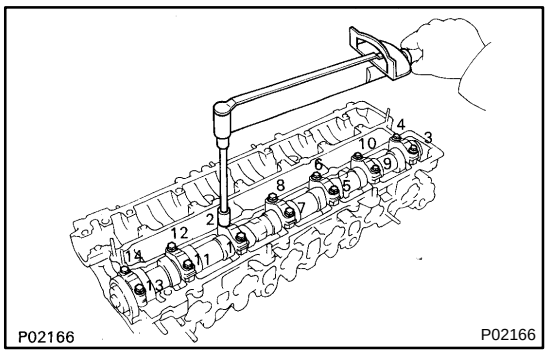

(d) Install the bearing caps (See page EM-47).
Torque: 20 N·m (200 kgf·cm, 14 ft·lbf)

NOTICE:

Do not turn the camshaft.

(e) Remove the bearing caps.

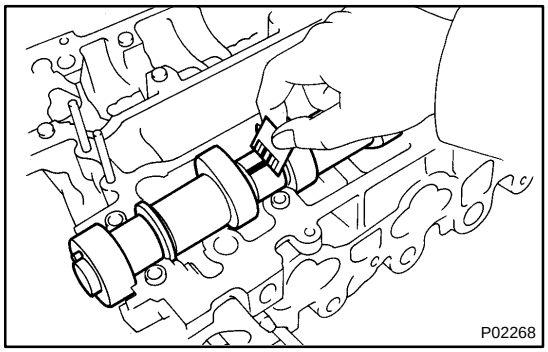

(f) Measure the Plastigage at its widest point.
Standard oil clearance:
0.035 - 0.072 mm (0.0014 - 0.0028 in.)
Maximum oil clearance:
0.10 mm (0.0039 in.)

If the oil clearance is greater than maximum, replace the camshaft. If necessary, replace the bearing caps and cylinder head as a set.

(g) Completely remove the Plastigage.

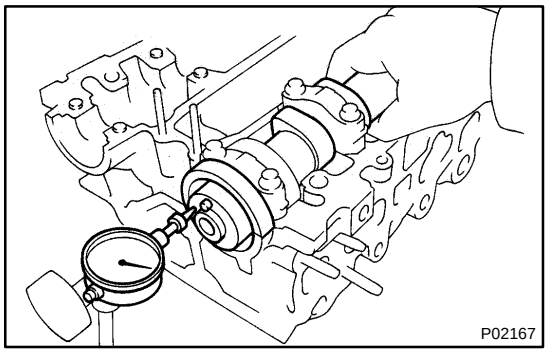

18. INSPECT CAMSHAFT THRUST CLEARANCE

(a) Install the camshafts (See page EM-47).

(b) Using a dial indicator, measure the thrust clearance while moving the camshaft back and forth.
Standard thrust clearance:
0.080 - 0.190 mm (0.0031 - 0.0075 in.)
Maximum thrust clearance:
0.30 mm (0.0118 in.)

If the thrust clearance is greater than maximum, replace the camshaft. If necessary, replace the bearing caps and cylinder head as a set.

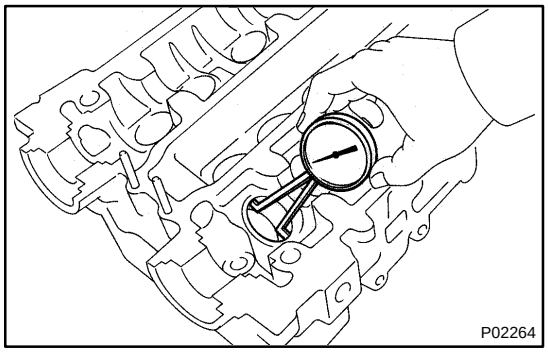

19. INSPECT VALVE LIFTERS AND LIFTER BORES

(a) Using a caliper gauge, measure the lifter bore diameter of the cylinder head.
Lifter bore diameter:
31.000 - 31.016 mm (1.2205 - 1.2211 in.)

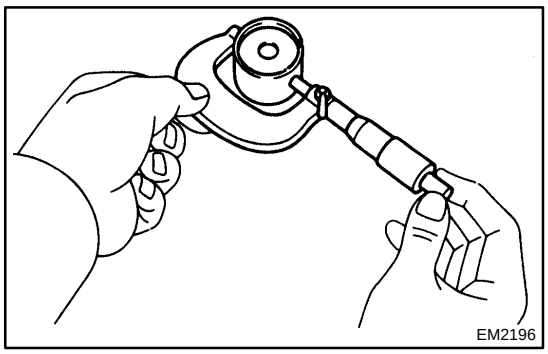

(b) Using a micrometer, measure the lifter diameter.
Lifter diameter:
30.966 - 30.976 mm (1.2191 - 1.2195 in.)

(c) Subtract the lifter diameter measurement from the lifter bore diameter measurement.
Standard oil clearance:
0.024 - 0.050 mm (0.0009 - 0.0020 in.)
Maximum oil clearance:
0.07 mm (0.0028 in.)

If the oil clearance is greater than maximum, replace the lifter. If necessary, replace the cylinder head.

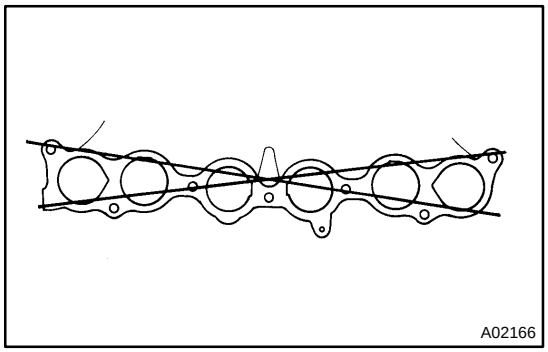

20. INSPECT AIR INTAKE CHAMBER

Using a precision straight edge and feeler gauge, measure the surfaces contacting the intake manifold for warpage.
Maximum warpage: 0.15 mm (0.0059 in.)
If warpage is greater than maximum, replace the chamber.

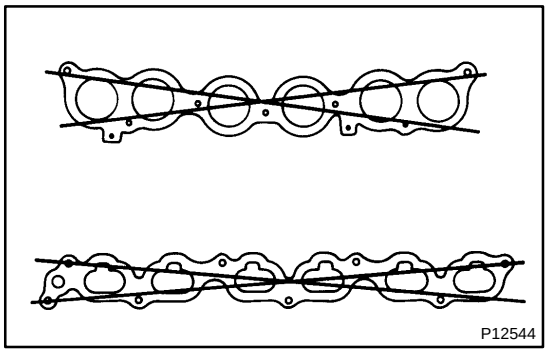

21. INSPECT INTAKE MANIFOLD

Using a precision straight edge and feeler gauge, measure the surfaces contacting the cylinder head and air intake chamber for warpage.
Maximum warpage: 0.15 mm (0.0059 in.)
If warpage is greater than maximum, replace the manifold.

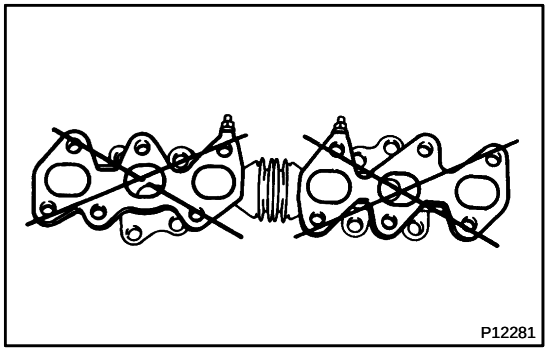

22. INSPECT EXHAUST MANIFOLD

Using a precision straight edge and feeler gauge, measure the surfaces contacting the cylinder head for warpage.
Maximum warpage: 0.80 mm (0.0315 in.)
If warpage is greater than maximum, replace the manifold.

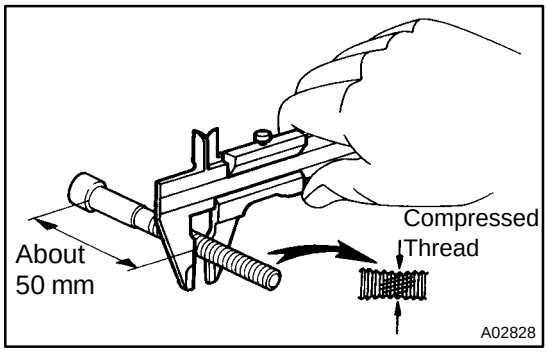

23. INSPECT CYLINDER HEAD BOLTS

Using a vernier caliper, measure the thread outside diameter of the bolt.
Standard outside diameter:
10.8 - 11.0 mm (0.425 - 0.433 in.)
Minimum outside diameter: 10.7 mm (0.421 in.)
If the diameter is less than minimum, replace the bolt.

EM0AK-02

REPLACEMENT

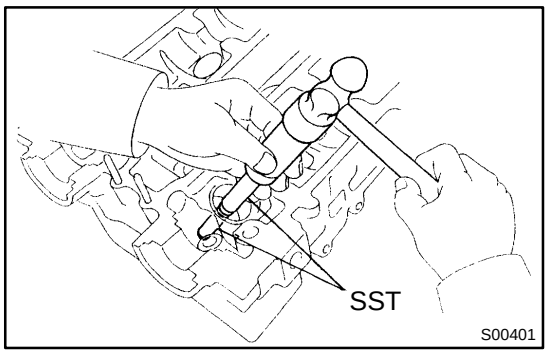

1. REPLACE VALVE GUIDE BUSHINGS

(a) Using SST and a hammer, tap out the guide bushing.
SST 09201-10000 (09201-01060),
09950-70010 (09951-07100)

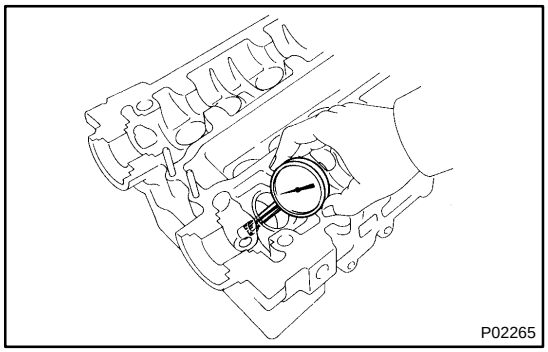

(b) Using a caliper gauge, measure the bushing bore diameter of the cylinder head.

(c) Select a new guide bushing (STD or O/S 0.05).
Both intake and exhaust

Bushing bore diameter mm (in.)	Bushing size
10.985 - 11.006 (0.4350 - 0.4333)	Use STD
11.035 - 11.056 (0.4344 - 0.4353)	Used O/S 0.05

If the bushing bore diameter of the cylinder head is greater than 11.006 mm (0.4333 in.), machine the bushing bore to the following dimension:

11.035 - 11.056 mm (0.4344 - 0.4353 in.)

If the bushing bore diameter of the cylinder head is greater than 11.056 mm (0.4353 in.), replace the cylinder head.

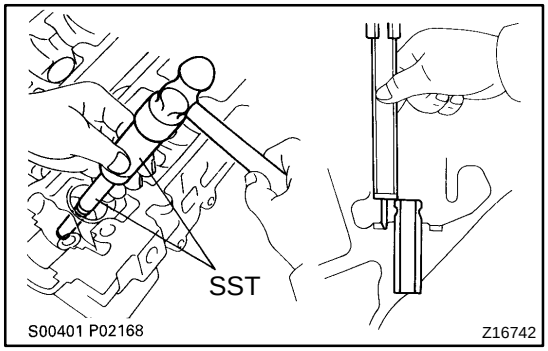

(d) Using SST and a hammer, tap in a new guide bushing to the specified protrusion height.
SST 09201-10000 (09201-01060),
09950-70010 (09951-07100)
Protrusion height:
Intake 12.3 - 12.7 mm (0.484 - 0.500 in.)
Exhaust 11.4 - 11.8 mm (0.449 - 0.465 in.)

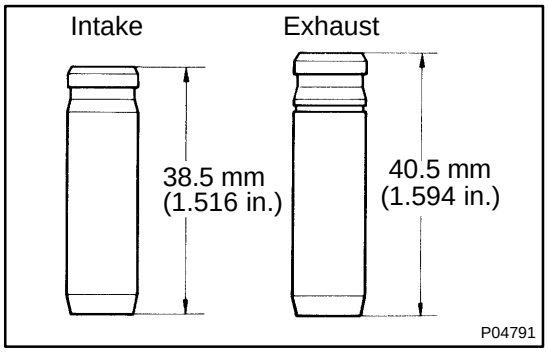

HINT:
Different bushings are used for the intake and exhaust.

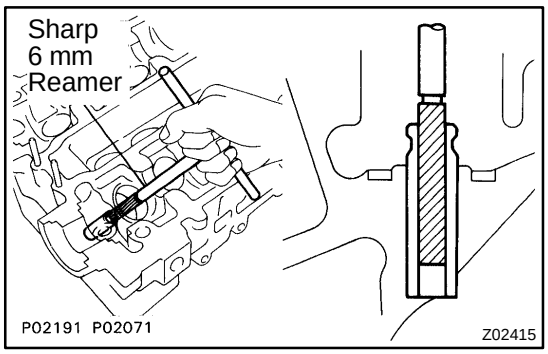

(e) Using a sharp 6 mm reamer, ream the guide bushing to obtain the standard specified clearance (See page EM-35) between the guide bushing and valve stem.

EM0AL-02

REASSEMBLY

HINT:

- Thoroughly clean all parts to be assembled.
- Before installing the parts, apply fresh engine oil to all sliding and rotating surfaces.
- Replace all gaskets and oil seals with new ones.

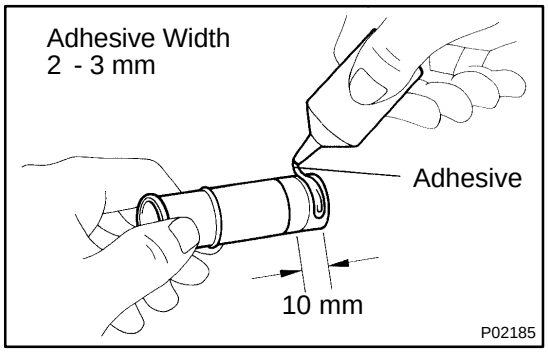

1. INSTALL HEATER UNION

HINT:

When using a new cylinder head, a new heater union must be installed.

(a) Apply adhesive to the end of the heater union as shown in the illustration.
Adhesive:
Part No. 08833-00070, THREE BOND 1324 or equivalent

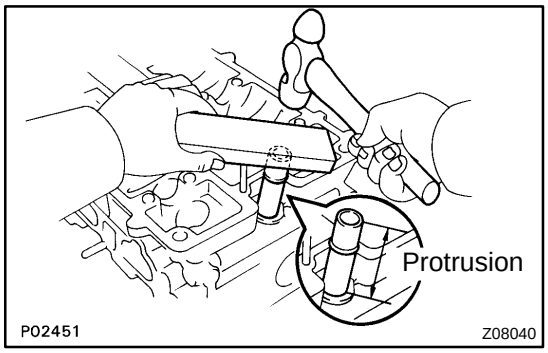

(b) Using a wooden block and hammer, tap in a new heater union, leaving standard position protruding from the cylinder head.
Standard protrusion:
48 mm (1.89 in.)

NOTICE:

Do not tap it in too far.

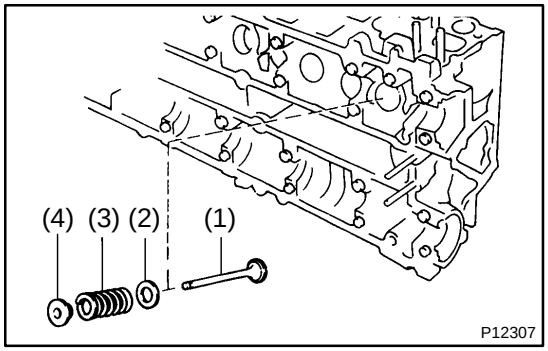

2. INSTALL VALVES

(a) Install a new oil seal on the valve guide bushing.

(b) Install these parts:
(1) Valve
(2) Spring seat
(3) Valve spring
(4) Spring retainer

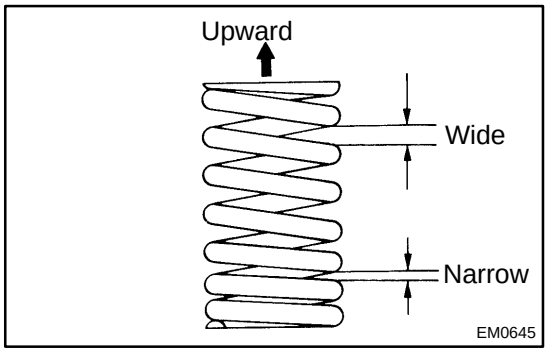

NOTICE:

Confirm the correct direction of the valve spring.

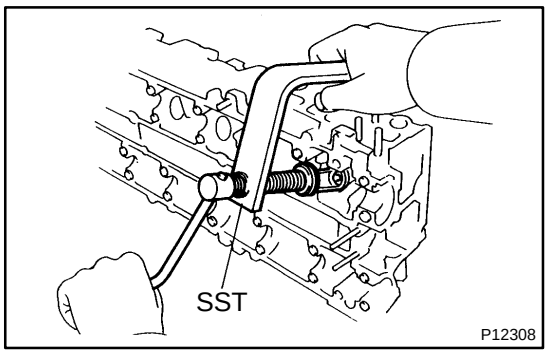

(c) Using SST, compress the valve spring and place the 2 keepers around the valve stem.
SST 09202-70020 (09202-00010)

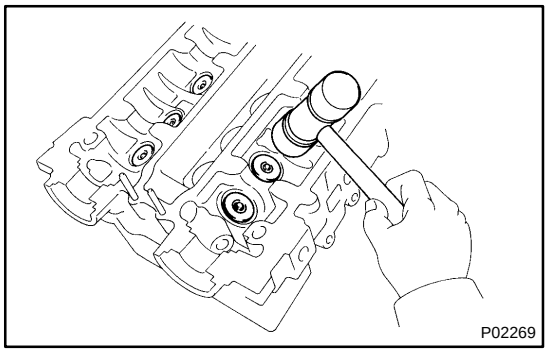

(d) Using a plastic-faced hammer, lightly tap the valve stem tip to ensure a proper fit.

3. INSTALL VALVE LIFTERS AND SHIMS

(a) Install the valve lifter and shim.

(b) Check that the valve lifter rotates smoothly by hand.

4. INSTALL EGR COOLER

Install a new gasket and the EGR cooler with the 8 bolts.

Torque: 8.8 N·m (90 kgf·cm, 78 in.·lbf)

5. INSTALL CAMSHAFT POSITION SENSORS

Install the gasket and sensor with the 2 bolts.

Torque: 8.8 N·m (90 kgf·cm, 78 in.·lbf)

6. INSTALL ENGINE HANGERS AND GROUND STRAP

Torque: 39 N·m (400 kgf·cm, 29 ft·lbf)

EM0AM-02

INSTALLATION

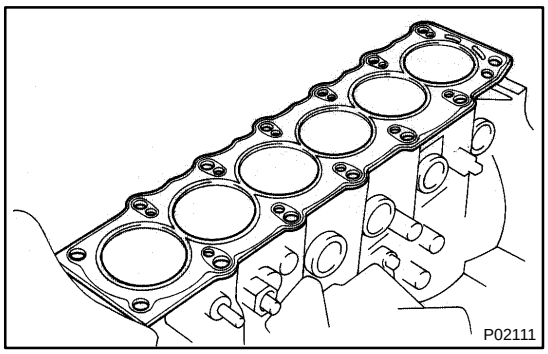

1. PLACE CYLINDER HEAD ON CYLINDER BLOCK

(a) Place a new cylinder head gasket in position on the cylinder block.

NOTICE:

Be sure to install it correctly.

(b) Place the cylinder head in position on the cylinder head gasket.

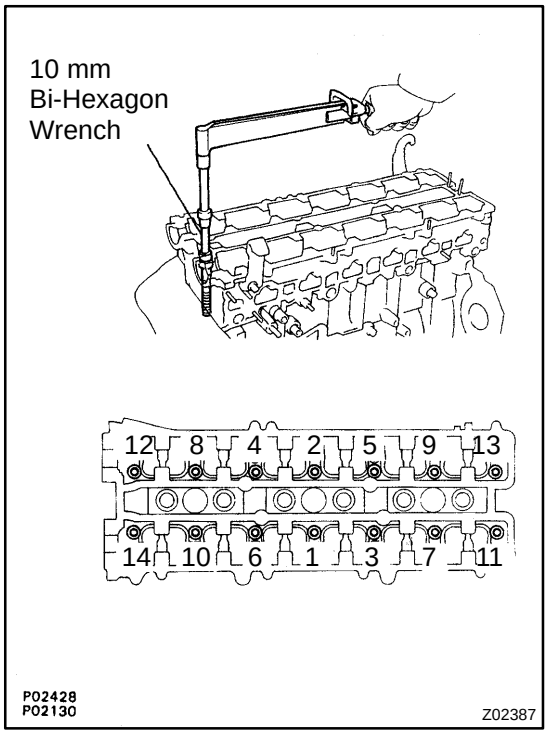

2. INSTALL CYLINDER HEAD BOLTS

HINT:

- The cylinder head bolts are tightened in 2 progressive steps (steps (c) and (f)).
- If any of bolts break or deform, replace them.

(a) Apply a light coat of engine oil on the threads and under the heads of the cylinder head bolts.

(b) Install the 14 plate washers to each cylinder head bolt.

(c) Using a 10 mm bi-hexagon wrench, uniformly tighten the cylinder head bolts, in several passes, in the sequence shown.

Torque: 34 N·m (350 kgf·cm, 25 ft·lbf)

If any of the bolts do not meet the torque specification, replace the bolt.

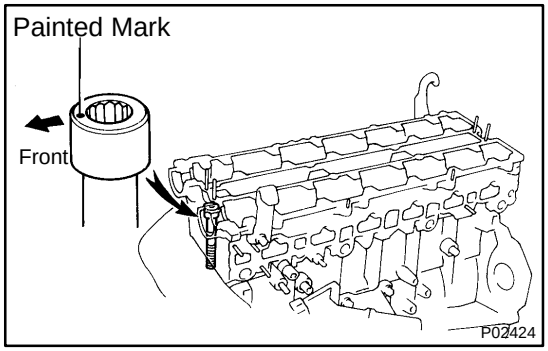

(d) Mark the front of the cylinder head bolt head with paint.

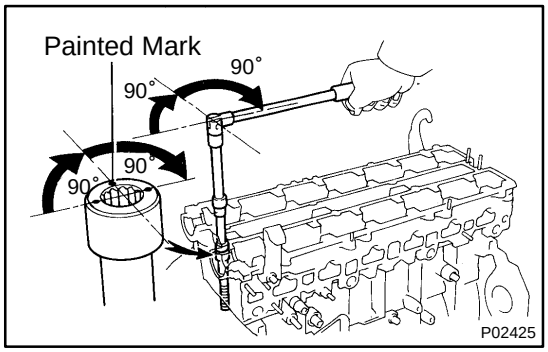

(e) Retighten the cylinder head bolts by 90° in the numerical order shown in the illustration on previous page.

(f) Retighten cylinder head bolts by an additional 90° shown in the illustration on previous page.

(g) Check that the painted mark is now turned to the rear.

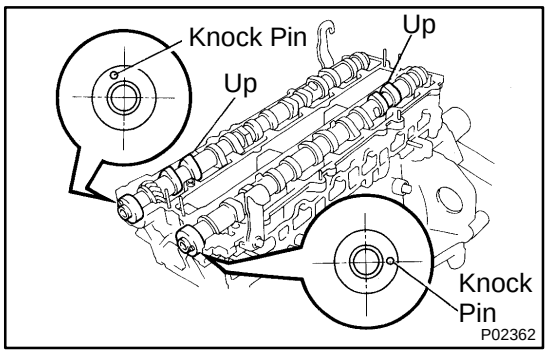

3. INSTALL CAMSHAFTS

(a) Apply engine oil to the thrust portion of the camshaft.

(b) Place the camshaft on the cylinder head with the cam lobe facing up as shown.

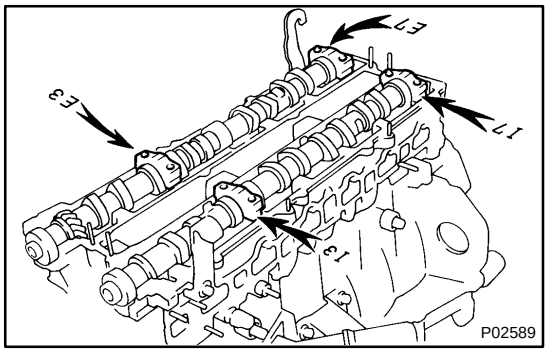

(c) Place the No.3 and No.7 bearing caps in their proper location.

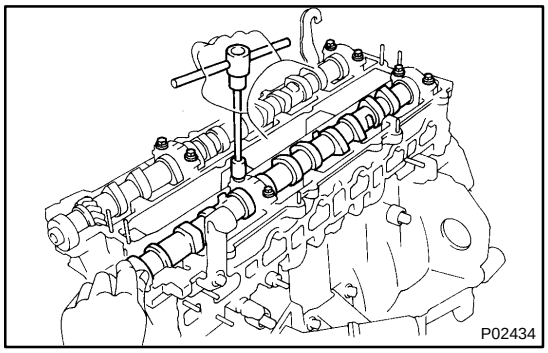

(d) Apply a light coat of engine oil on the threads and under the heads of the bearing cap bolts.

(e) Temporarily tighten these bearing cap bolts uniformly and alternately, in several passes, until the bearing caps are snug with the cylinder head.

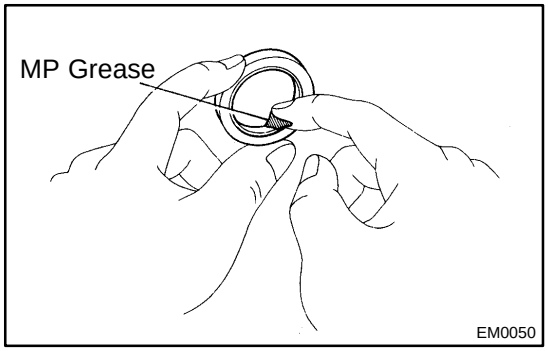

(f) Apply MP grease to a new camshaft oil seal lip.

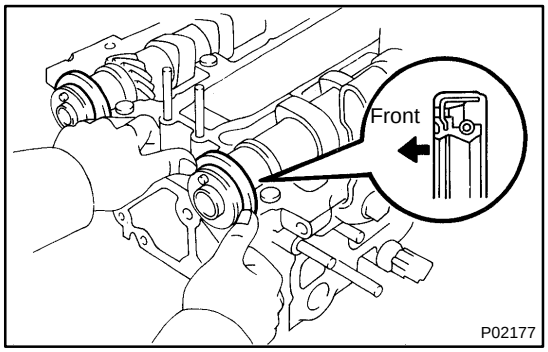

(g) Install the 2 oil seals to the camshafts.

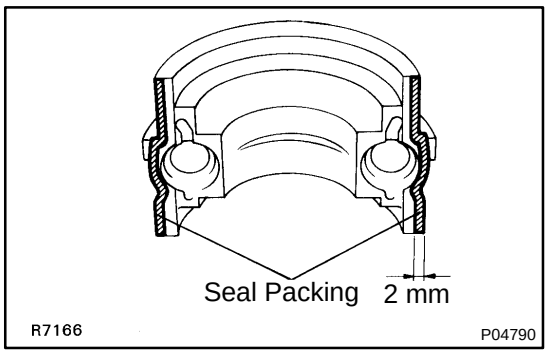

(h) Clean the installed surfaces of the No.1 bearing cap and cylinder head with cleaner.

(i) Apply seal packing to the No.1 bearing cap as shown.
Seal packing: Part No. 08826-00080 or equivalent

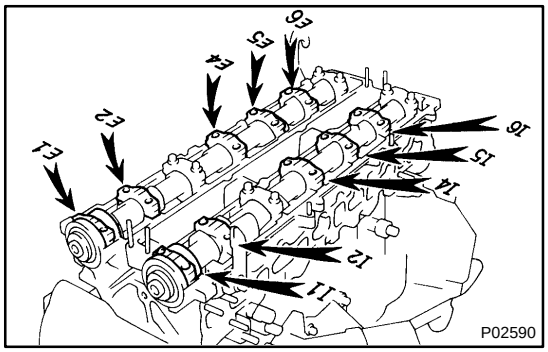

(j) Install the No.1, No.2, No.4, No.5 and No.6 bearing caps in their proper locations.

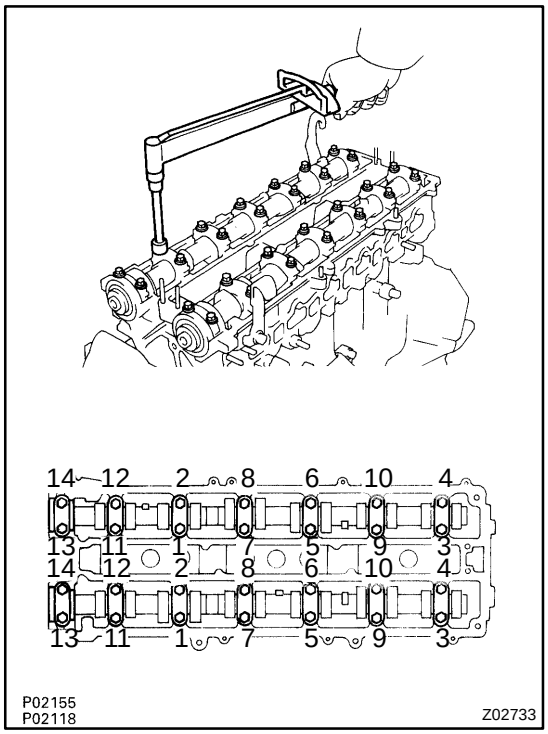

(k) Apply a light coat of engine oil on the threads and under the heads of the bearing cap bolts.

(l) Install and uniformly tighten the 14 bearing cap bolts on one side, in several passes, in the sequence shown.
Torque: 20 N·m (200 kgf·cm, 14 ft·lbf)

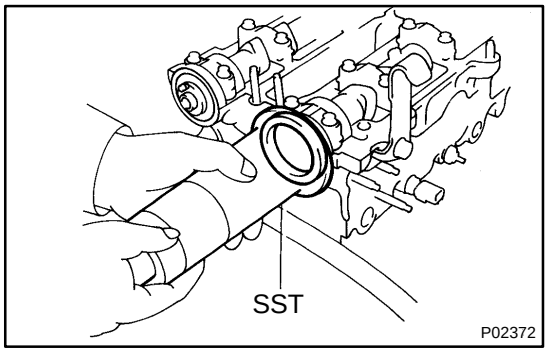

(m) Using SST, push the 2 oil seals in as far as they can go.
SST 09316-6001 1 (09316-00011, 09316-00051)

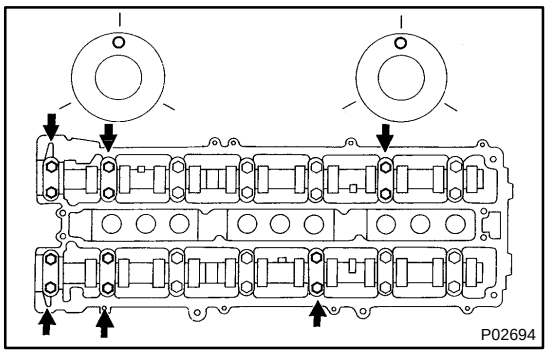

(n) Rotate the camshaft with a wrench at the hexagon position, bring the forward straight pin up.

(o) Loosen the 12 bearing cap bolts as shown, until they can be turned by hand; retighten, in several passes.
Torque: 20 N·m (200 kgf·cm, 14 ft·lbf)

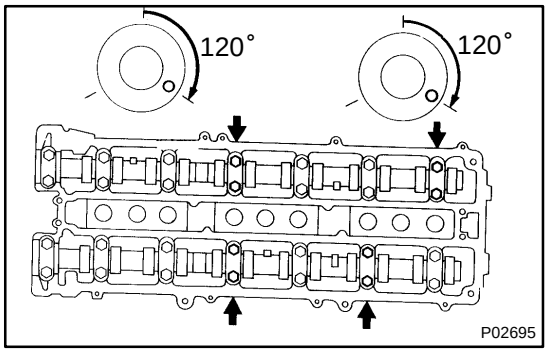

(p) Turn the camshaft 1/3 of revolution.

(q) Loosen the 8 bearing cap bolts as shown, until they can be turned by hand; retighten, in several passes.
Torque: 20 N·m (200 kgf·cm, 14 ft·lbf)

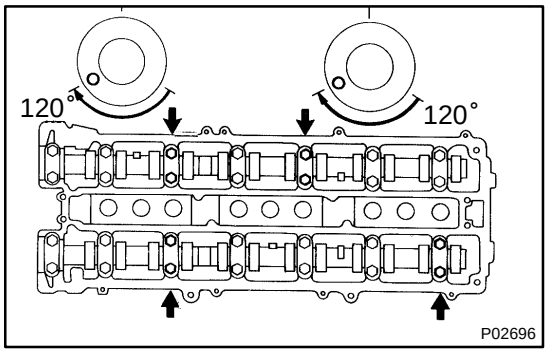

(r) Turn the camshaft a further 1/3 of a revolution.

(s) Loosen the 8 bearing cap bolts as shown, until they can be turned by hand; retighten, in several passes.
Torque: 20 N·m (200 kgf·cm, 14 ft·lbf)

4. CHECK AND ADJUST VALVE CLEARANCE
(See page EM-4)

Turn the camshaft, and position the cam lobe upward, check and adjust the valve clearance.

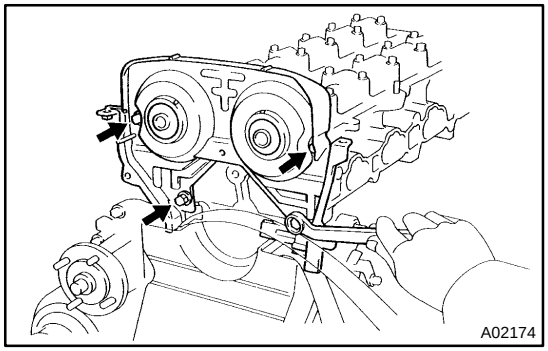

5. INSTALL NO.4 TIMING BELT COVER

Install the timing belt cover with 4 bolts.
Torque: 8.0 N·m (80 kgf·cm, 71 in.·lbf)

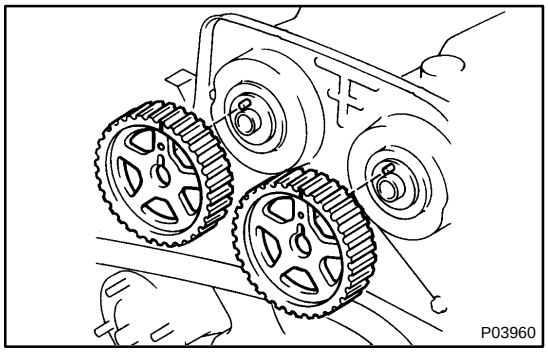

6. INSTALL CAMSHAFT TIMING PULLEYS

(a) Align the camshaft knock pin with the groove in the pulley, and slide on the pulley.

(b) Temporarily install the timing pulley bolt.

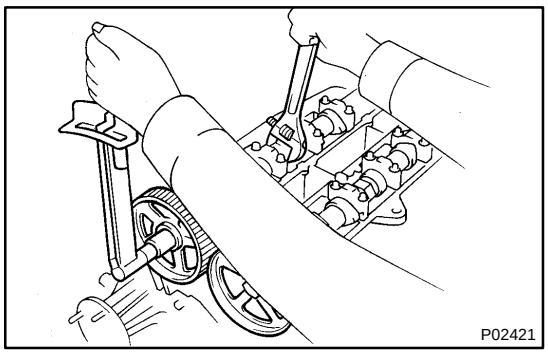

(c) Hold the hexagon portion of the camshaft with a wrench, and tighten the timing pulley bolt.
Torque: 81 N·m (810 kgf·cm, 60 ft·lbf)

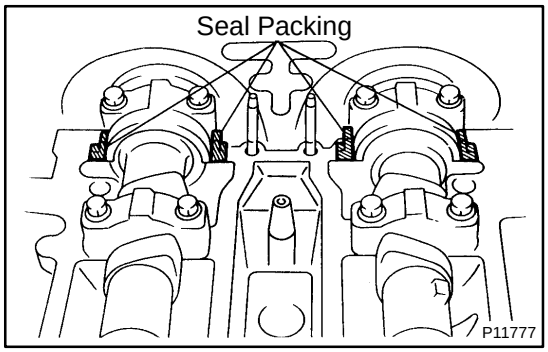

7. INSTALL NO.1 AND NO.2 CYLINDER HEAD COVERS

(a) Remove any old packing (FIPG) material.

(b) Apply seal packing to the cylinder head as shown in the illustration.
Seal packing: Part No. 08826-00080 or equivalent

(c) Install the gaskets to the No.1 and No.2 cylinder head covers.

(d) Install the seal washers to the mounting bolts.

(e) Install the No.1 cylinder head cover with the 4 seal washers and 4 bolts.
Torque: 5.5 N·m (55 kgf·cm, 49 in.·lbf)

(f) Install the No.2 cylinder head cover with the 4 seal washers and 4 bolts.
Torque: 5.5 N·m (55 kgf·cm, 49 in.·lbf)

(g) Install the PCV valve.

(h) Install the cruise control actuator cable bracket and IAC valve pipe clamp with the 2 bolts.

8. INSTALL SPARK PLUGS

9. INSTALL IGNITION COILS ASSEMBLIES
(See page IG-7)

10. INSTALL TIMING BELT (See page EM-21)

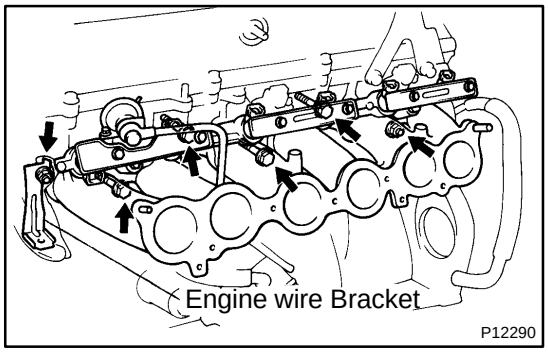

11. INSTALL INTAKE MANIFOLD AND DELIVERY PIPE ASSEMBLY

Install a new gasket, the intake manifold, delivery pipe assembly and engine wire bracket with the 4 bolts and 2 nuts.
Torque: 27 N·m (280 kgf·cm, 20 ft·lbf)

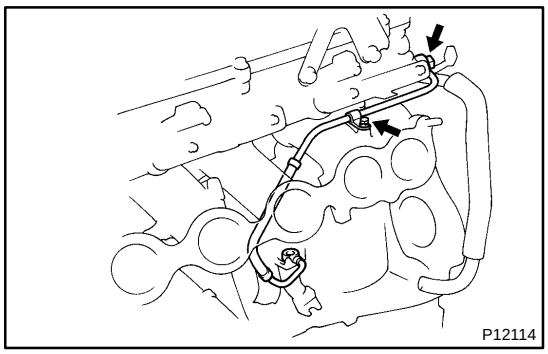

12. INSTALL FUEL INLET PIPE

(a) Connect the fuel inlet pipe with 2 new gaskets and the union bolt.
Torque: 42 N·m (420 kgf·cm, 30 ft·lbf)

(b) Install the clamp bolt to the intake manifold.

13. INSTALL FUEL PRESSURE PULSATION DAMPER
(See page SF-32)

14. INSTALL PRESSURE TANK AND VSV ASSEMBLY
Torque: 21 N·m (210 kgf·cm, 15 ft·lbf)

15. CONNECT ENGINE WIRE

(a) Install the engine wire protector to the intake manifold with the nut.

(b) Install the 2 ground straps to the intake manifold with the bolts.

(c) Connect these connectors and clamps:
- VSV connector for EVAP
- 6 injectors connectors

HINT:
The No.1, No.3 and No.5 injector connectors are dark gray, and the No.2, No.4 and No.6 injector connectors are gray.

- 2 camshaft position sensor connectors
- 3 engine wire clamps to injector holders

16. INSTALL AIR INTAKE CHAMBER ASSEMBLY
(See page SF-29)

17. CONNECT FUEL RETURN HOSE

18. INSTALL PS PUMP
Torque: 58 N·m (590 kgf·cm, 43 ft·lbf)

19. INSTALL NO.1 WATER BYPASS PIPE AND WATER OUTLET

(a) Install 2 new O-rings to the No.1 water bypass pipe.

(b) Apply soapy water to the O-rings.

(c) Install the No.1 water bypass pipe to the water pump.

(d) Install a new gasket and the water outlet with the 2 bolts.
Torque: 21 N·m (210 kgf·cm, 15 ft·lbf)

(e) Connect the ECT sensor and sender gauge connectors.

(f) Connect the upper radiator hose to the water outlet.

20. INSTALL DRIVE BELT

Install the drive belt by turning the drive belt tensioner clockwise.

21. M/T:
INSTALL DRIVE BELT TENSIONER DAMPER
(See page EM-21)

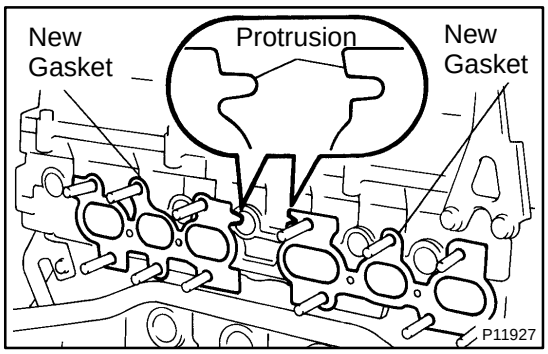

22. INSTALL EXHAUST MANIFOLD

(a) Place 2 new gaskets to the cylinder head facing the protrusion as shown.

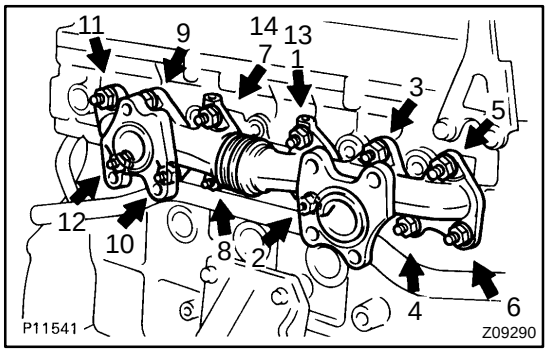

(b) Install the exhaust manifold with 12 new nuts, in several passes, in the sequence shown.
Torque: 39 N·m (400 kgf·cm, 29 ft·lbf)

23. INSTALL TURBOCHARGER (See page TC-20)

ENGINE UNIT

COMPONENTS

EM0AU-03

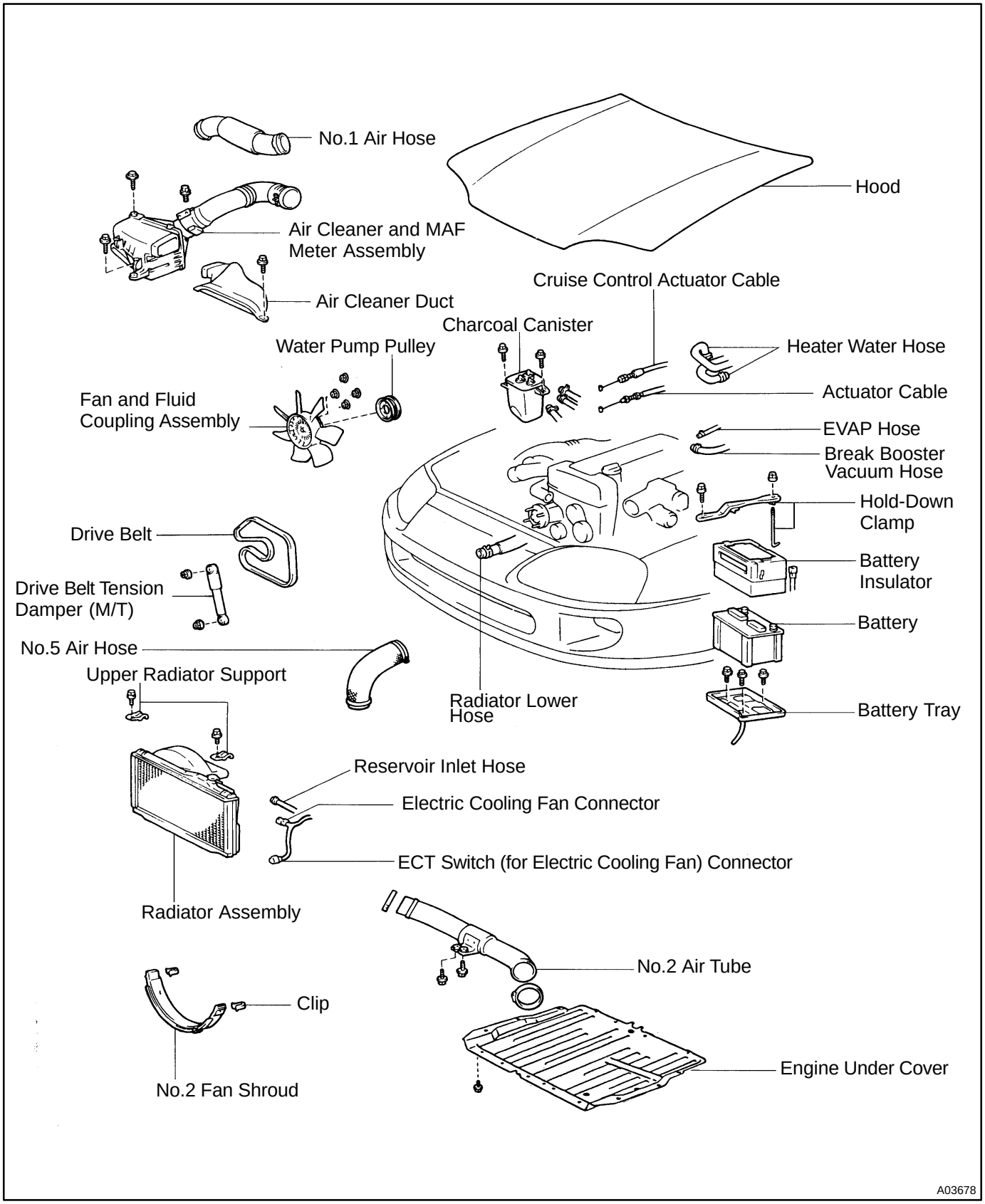

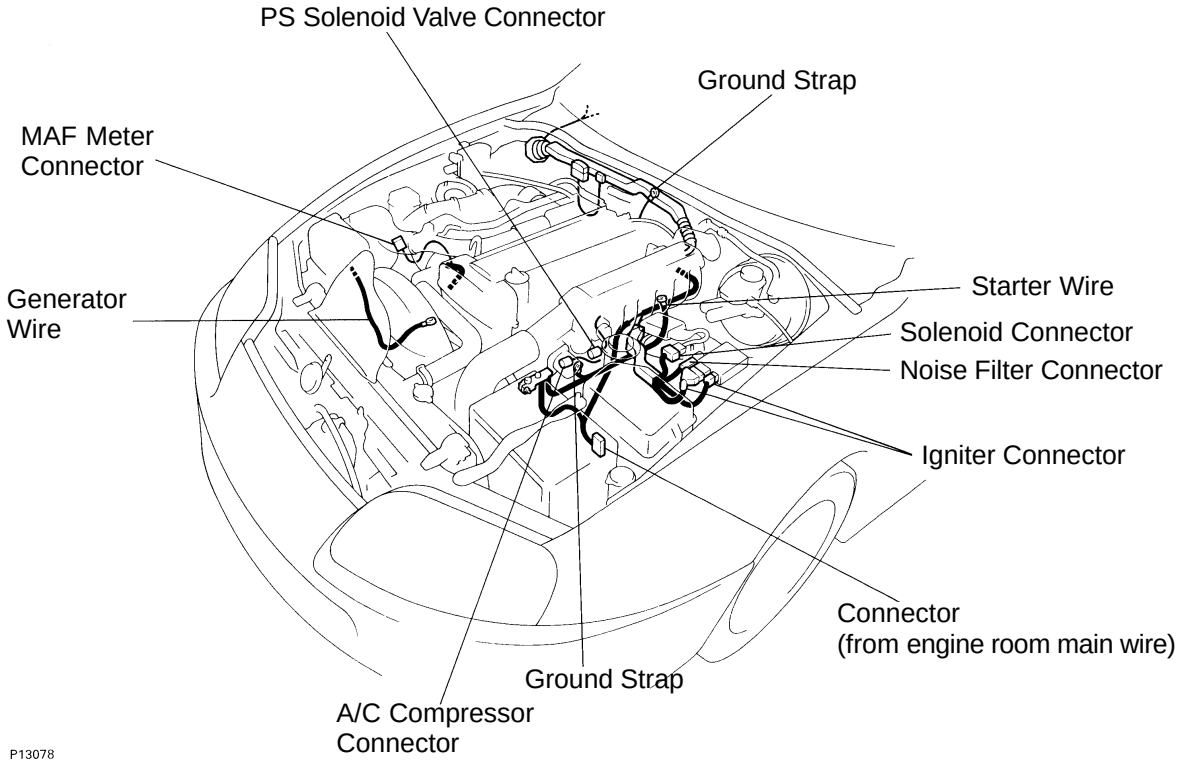
PS Solenoid Valve Connector
Ground Strap
MAF Meter Connector
Generator Wire
Starter Wire
Solenoid Connector
Noise Filter Connector
Igniter Connector
Connector (from engine room main wire)
Ground Strap
A/C Compressor Connector
P13078

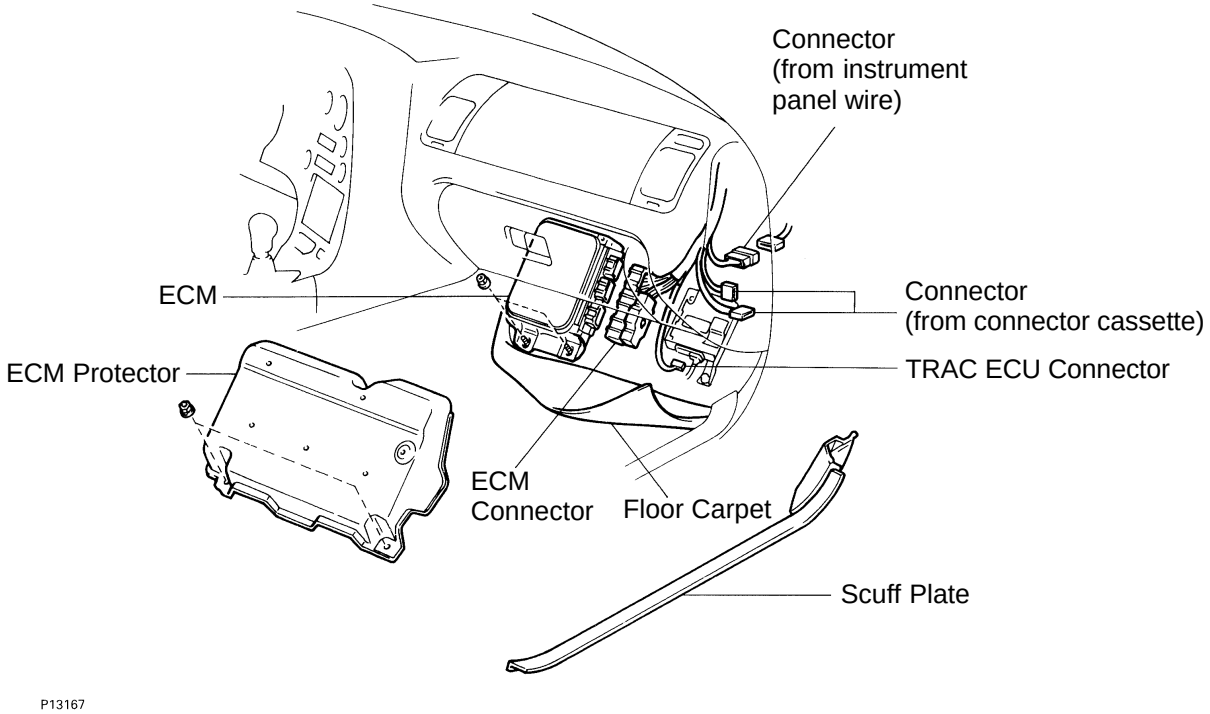
Connector (from instrument panel wire)
ECM
Connector (from connector cassette)
ECM Protector
TRAC ECU Connector
ECM Connector
Floor Carpet
Scuff Plate
P13167

Z16797

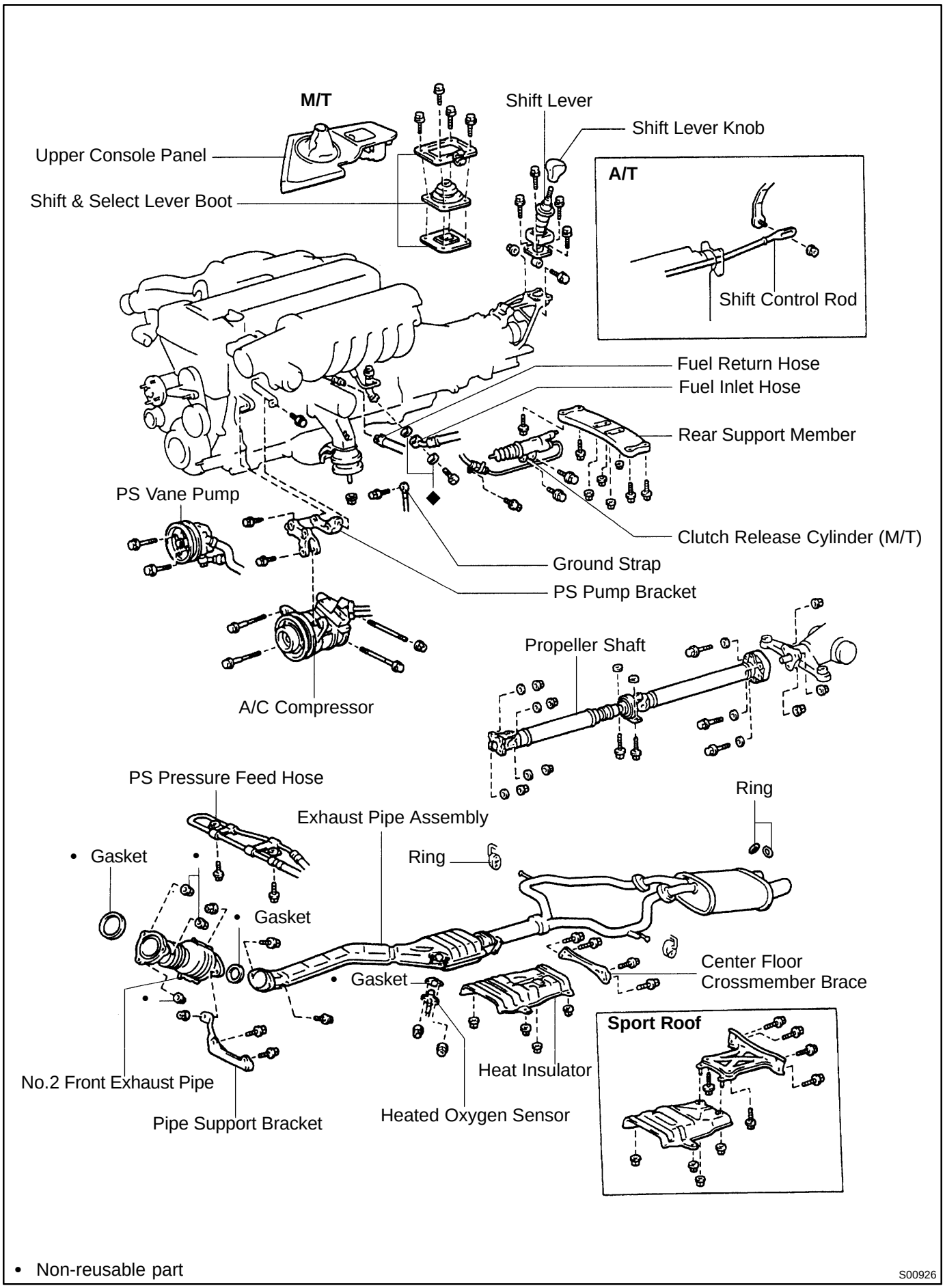

• Non-reusable part

S00926

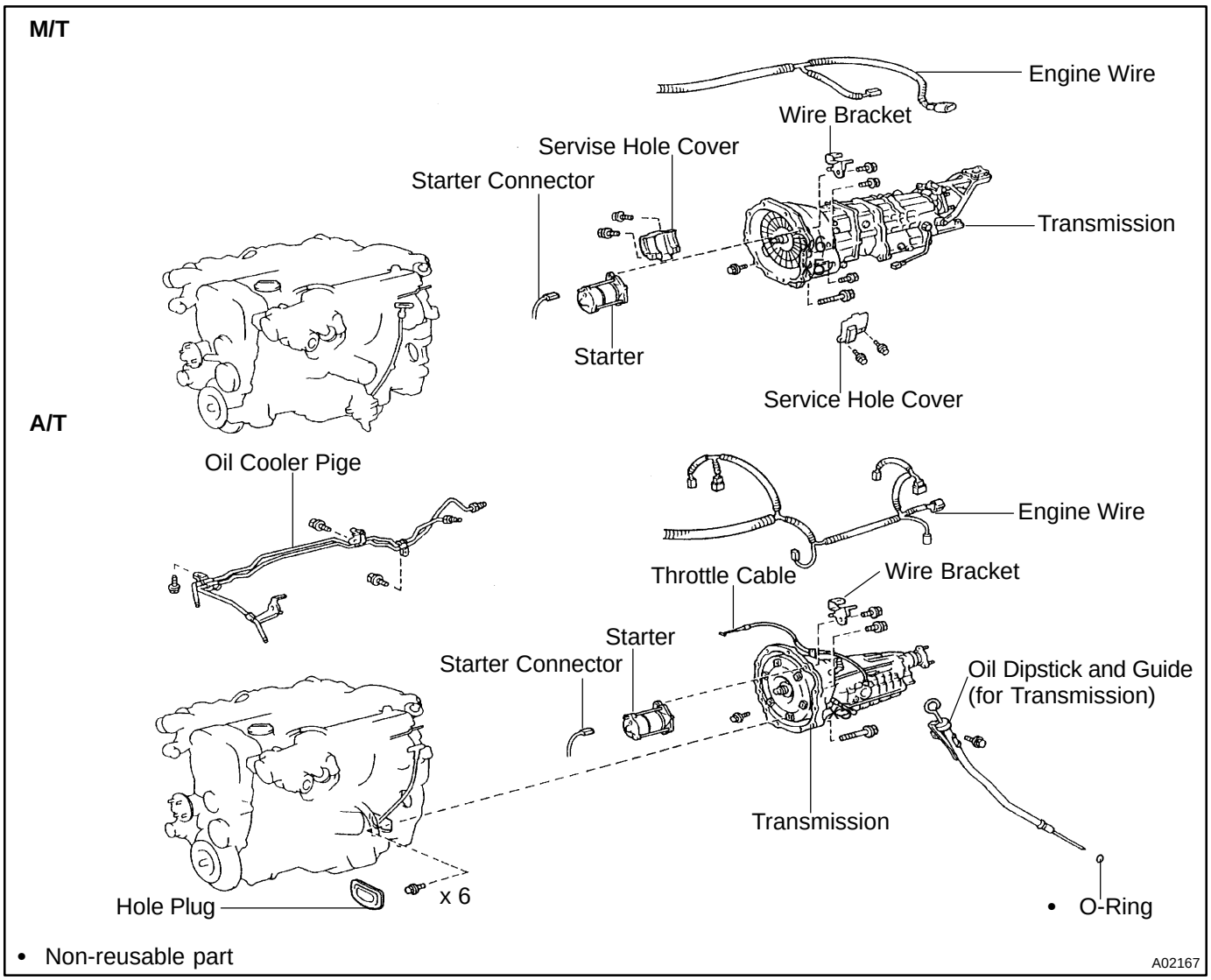
M/T
Engine Wire
Wire Bracket
Servise Hole Cover
Starter Connector
Transmission
Starter
Service Hole Cover
A/T
Oil Cooler Pige
Engine Wire
Throttle Cable
Wire Bracket
Starter
Starter Connector
Oil Dipstick and Guide
(for Transmission)
Transmission
Hole Plug
x 6
• O-Ring
• Non-reusable part
A02167

REMOVAL

1. REMOVE HOOD

2. REMOVE RADIATOR ASSEMBLY
(See page CO-22)

3. DRAIN ENGINE OIL EM0AV-02

4. DRAIN FUEL FROM FUEL TANK

5. REMOVE NO.1 AIR HOSE

6. DISCONNECT CONTROL CABLES FROM THROTTLE BODY

Disconnect these cables:

- Accelerator cable
- Cruise control actuator cable

7. REMOVE AIR CLEANER AND MAF METER ASSEMBLY

(a) Remove the 3 bolts.

(b) Loosen the hose clamp, disconnect the air hose from the intake air connector.

(c) Disconnect the MAF meter wire from the clamp on the air cleaner case.

(d) Disconnect the MAF meter connector, and remove the air cleaner and MAF meter assembly.

8. M/T:
REMOVE DRIVE BELT TENSIONER DAMPER
(See page EM-15)

9. REMOVE DRIVE BELT, FAN, FLUID COUPLING ASSEMBLY AND WATER PUMP PULLEY
(See page CO-7)

10. REMOVE CHARCOAL CANISTER

11. DISCONNECT HEATER WATER HOSES

12. DISCONNECT BRAKE BOOSTER VACUUM HOSE

13. DISCONNECT EVAP HOSE

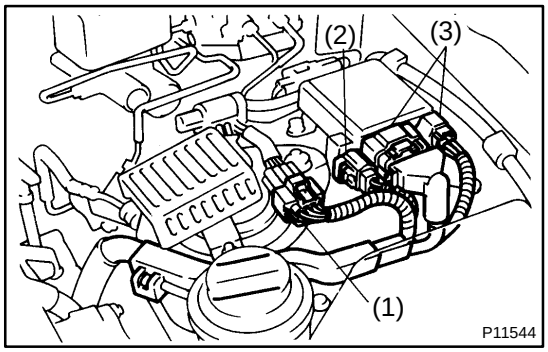

14. DISCONNECT WIRES AND CONNECTORS

(a) Disconnect these connectors:
(1) Solenoid resistor connector
(2) Noise filter connector
(3) Igniter connectors

(b) Disconnect the engine wire from the PS oil reservoir protector
.

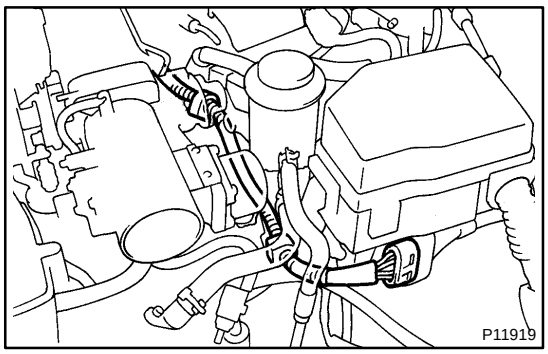

(c) Disconnect the connector from the engine room main wire.
(d) Disconnect the engine wire from the 2 wire clamps.
(e) Remove the rubber cap and nut, and disconnect the generator wire.
(f) Disconnect the wire clamp and PS solenoid valve connector.
(g) Remove the bolt and disconnect the ground strap from the cylinder block.

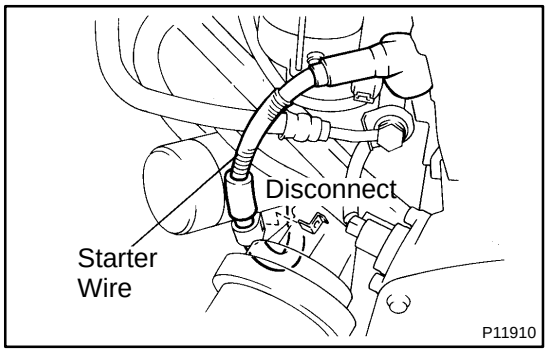

(h) Disconnect the starter wire from the LH engine mounting bracket.
(i) Remove the rubber cap and nut, and disconnect the starter wire.

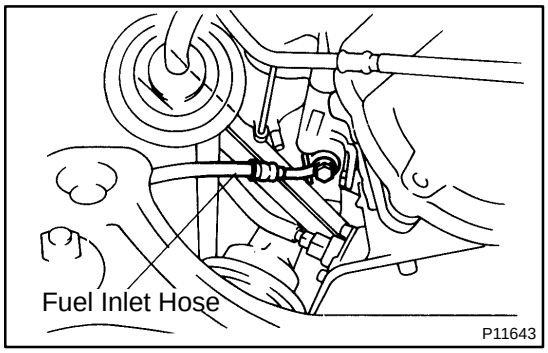

15. DISCONNECT FUEL HOSES

(a) Remove the union bolt and 2 gaskets, and disconnect the fuel inlet hose.

HINT:
- Put a suitable container or shop rag under the fuel pipe support.
- Slowly loosen the union bolt.

(b) Suspend the hose union end upward.

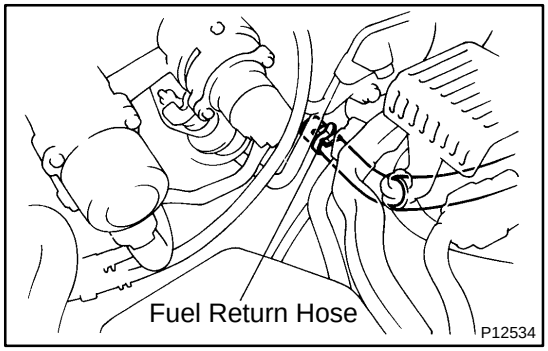

(c) Disconnect the fuel return hose from the clamp of the dipstick guide.
(d) Disconnect the fuel return hose from the fuel return pipe. Plug the hose end.

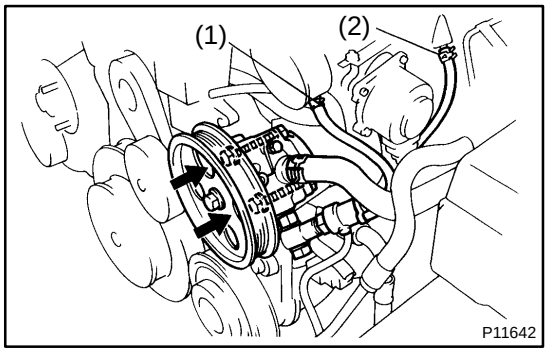

16. DISCONNECT PS PUMP WITHOUT DISCONNECTING HOSES

(a) Disconnect these hoses:
  (1) PS air hose from throttle body
  (2) PS air hose from air intake chamber
(b) Remove the 2 bolts, and disconnect the vane pump from the pump bracket.

HINT:
Put aside the vane pump, and suspend it securely.

(c) Remove the 3 bolts and pump bracket.

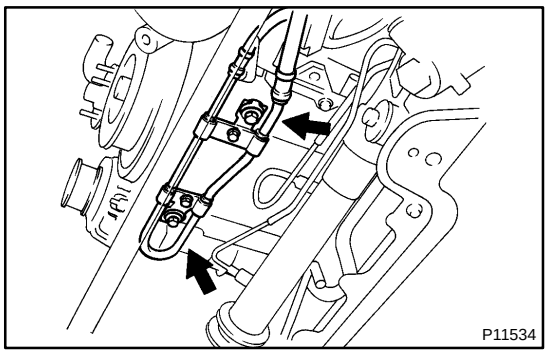

17. DISCONNECT PS PRESSURE FEED HOSE FROM ENGINE

Remove the 2 clamp bolts and disconnect the pressure feed hose.

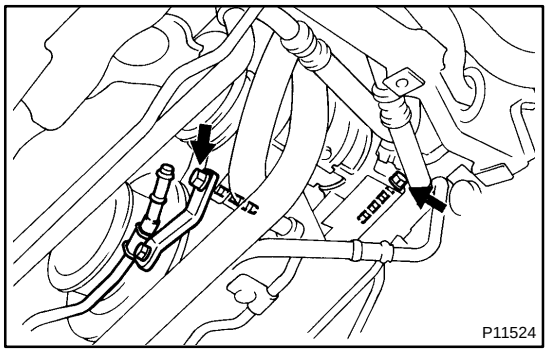

18. DISCONNECT A/C COMPRESSOR WITHOUT DISCONNECTING HOSES

(a) Remove the 2 bolts.

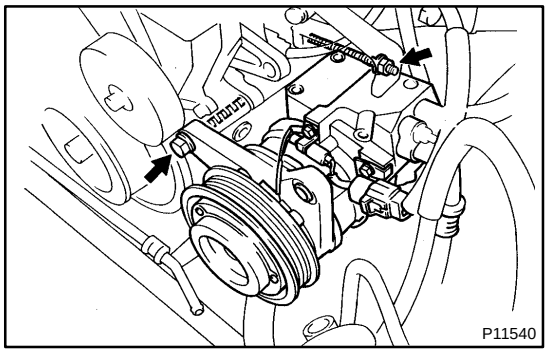

(b) Disconnect the compressor connector.

(c) Remove the bolt and nut.

(d) Using a torx socket (E10), remove the stud bolt, and disconnect the compressor from the engine.

HINT:

Put aside the compressor, and suspend it securely.

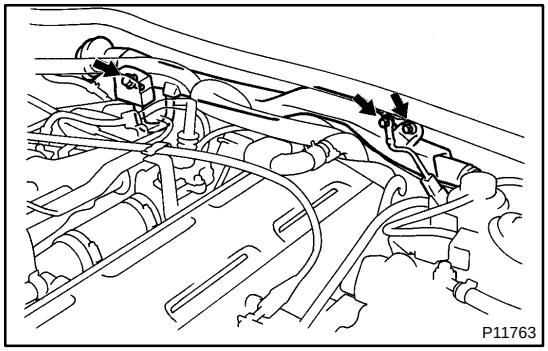

19. DISCONNECT ENGINE WIRE FROM COWL PANEL

(a) Remove the bolt, and disconnect the ground strap.

(b) Remove the 2 bolts, and disconnect the engine wire protector.

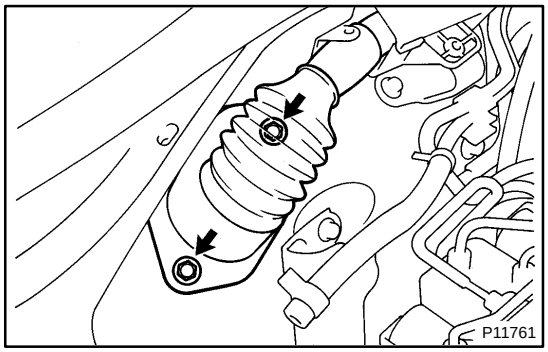

(c) Remove the 2 bolts holding the engine wire retainer to the cowl panel.

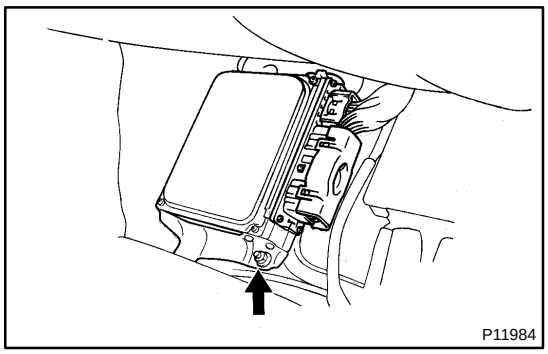

20. DISCONNECT ENGINE WIRE FROM CABIN

(a) Remove the scuff plate.
(b) Take out the front side of the floor carpet.
(c) Remove the 2 nuts and ECM protector.
(d) Remove the nut, and disconnect the ECM from the floor panel.

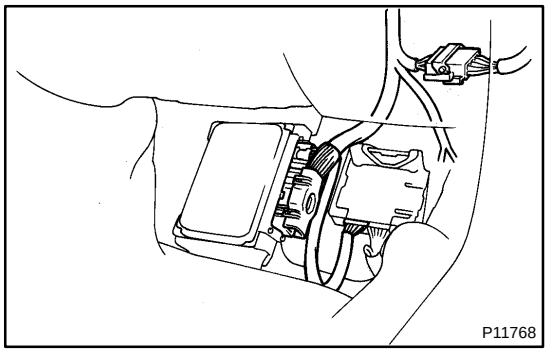

(e) Disconnect the 2 connectors from the ECM.
(f) Disconnect the connector from the TRAC ECU.
(g) Disconnect the connector from the instrument panel wire.
(h) Disconnect the 2 connectors from the connector cassette.
(i) Pull out the engine wire from the cabin.

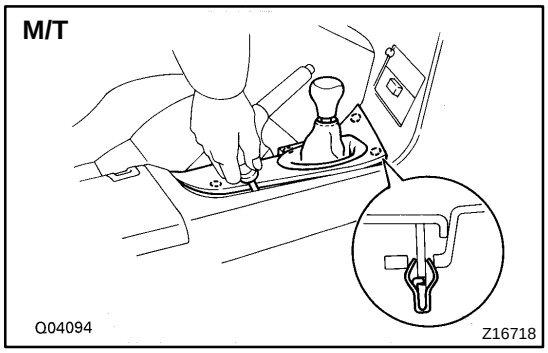

21. M/T:
REMOVE UPPER CONSOLE PANEL, SHIFT LEVER BOOTS AND HOLDING BOLTS

(a) Remove the shift lever knob.
(b) Using a screwdriver, pry out the upper console panel.

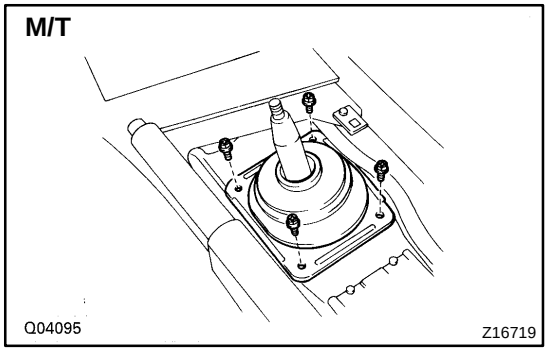

(c) Remove the 4 bolts holding the lever boot to the transmission cover.
(d) Remove the shift & select lever boots.
(e) Remove the 4 bolts holding the shift lever to the shift lever retainer.

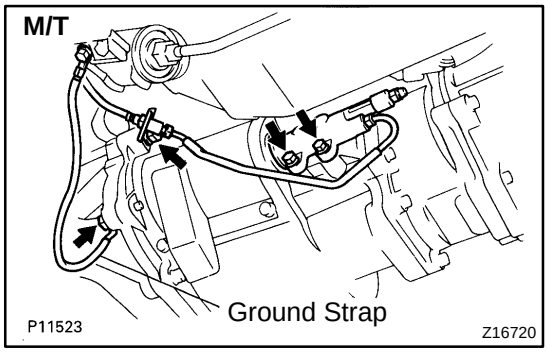

22. M/T:
DISCONNECT CLUTCH RELEASE CYLINDER AND GROUND STRAP FROM TRANSMISSION

(a) Remove the 2 bolts, and disconnect clutch release cylinder.
(b) Remove the bolt, and disconnect the clutch line tube.
(c) Remove the bolt, and disconnect ground strap.

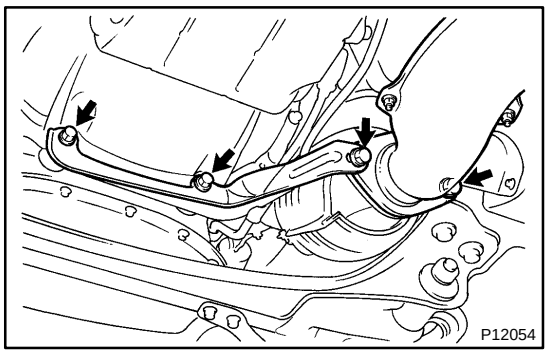

23. PDISCONNECT HEATED OXYGEN SENSOR FROM FRONT EXHAUST PIPE

Remove the 2 nuts, and disconnect oxygen sensor and gasket.

24. REMOVE EXHAUST PIPE ASSEMBLY

(a) Remove the 2 bolts and nuts holding the front exhaust pipe to the No.2 front exhaust pipe.

(b) Remove the 2 bolts and pipe support bracket.

(c) Remove the gasket, and disconnect the front exhaust pipe.

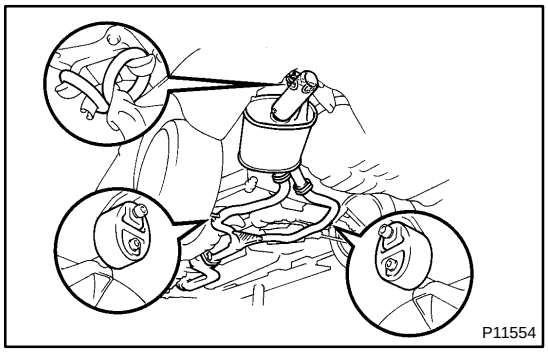

(d) Disconnect the hook of the tailpipe from the 2 rings.

(e) Disconnect the 2 rings on the exhaust pipe from the exhaust pipe brackets, and remove the exhaust pipe assembly.

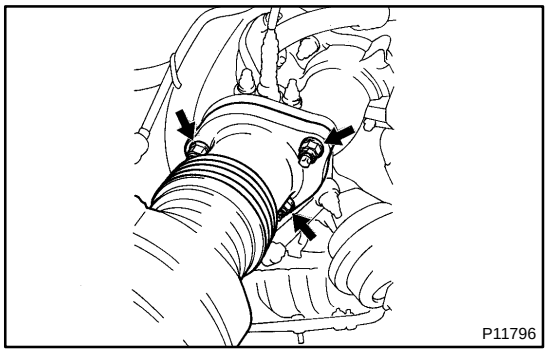

25. REMOVE NO.2 FRONT EXHAUST PIPE

Remove the 3 nuts, front exhaust pipe and gasket.

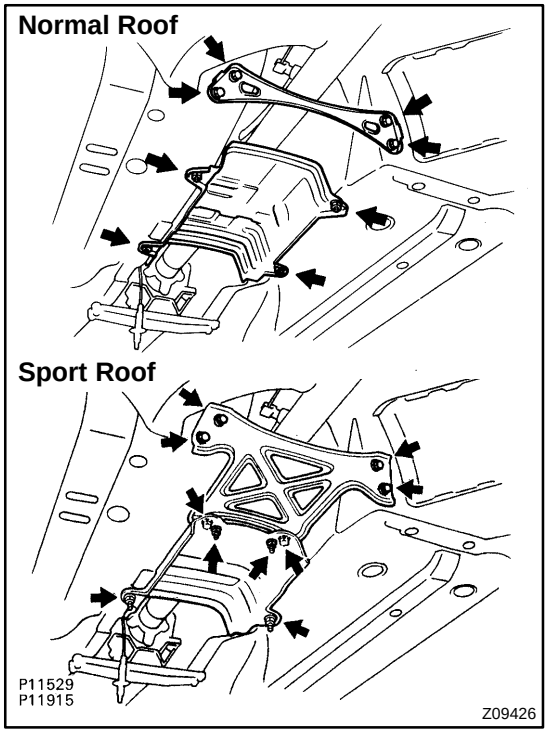

26. REMOVE EXHAUST PIPE HEAT INSULATOR

Remove the 4 nuts and heat insulator.

27. REMOVE REAR CENTER FLOOR CROSSMEMBER BRACE

Remove the 4 bolts (Normal roof) or 6 bolts (Sport roof) and crossmember brace.

28. REMOVE PROPELLER SHAFT

(See page PR-4)

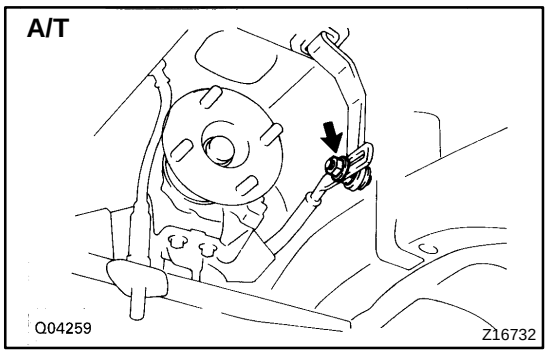

29. A/T:
DISCONNECT TRANSMISSION CONTROL ROD

Remove the nut, and disconnect the control rod from the shift lever.

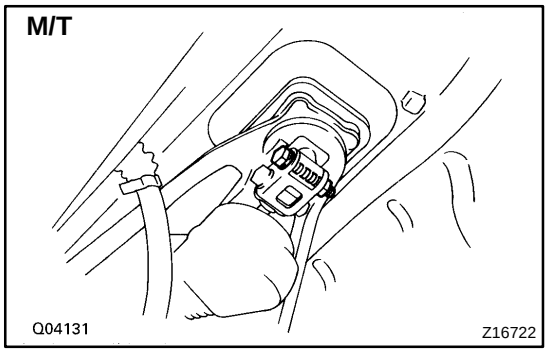

30. M/T:
REMOVE TRANSMISSION SHIFT LEVER

(a) Remove the bolt and nut.
(b) Remove the transmission shift lever, inside of vehicle.

31. PLACE JACK UNDER TRANSMISSION

NOTICE:

Be sure to put a wooden block between the jack and the transmission oil pan to prevent damage (A/T).

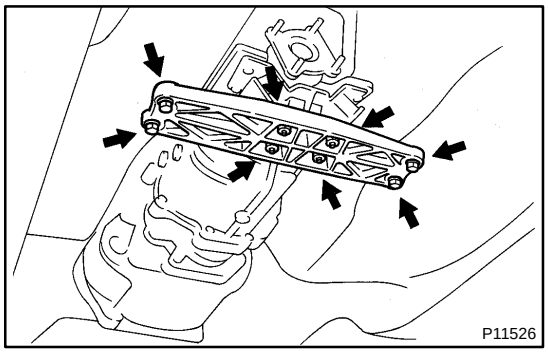

32. REMOVE REAR SUPPORT MEMBER

(a) Remove the 4 nuts holding the member to the engine rear mounting insulator.
(b) Remove the 4 bolts and rear support member.

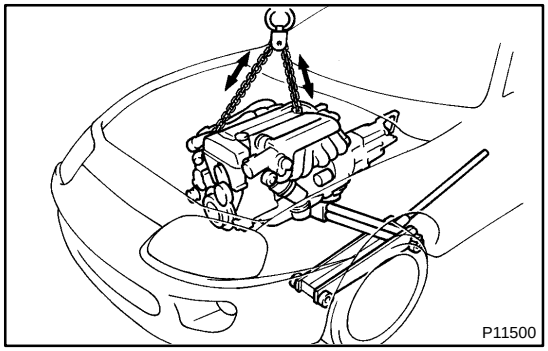

33. REMOVE ENGINE AND TRANSMISSION ASSEMBLY FROM VEHICLE

(a) Attach the engine hoist chain to the 2 engine hangers.

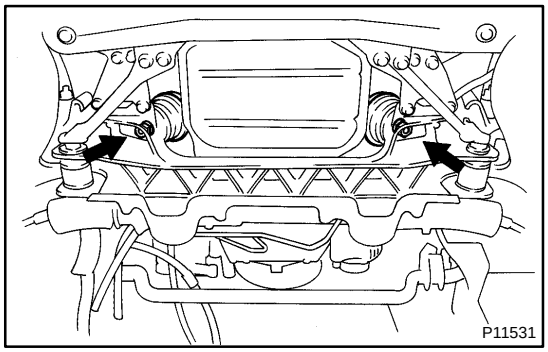

(b) Remove the 2 nuts holding the engine front mounting insulators to the front suspension crossmember.

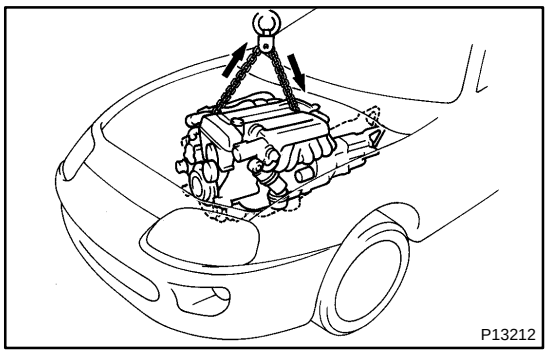

(c) Lift the engine out of the vehicle slowly and carefully.

NOTICE:

Remove the engine and transmission assembly carefully without damaging the shift lever retainer (M/T), A/C compressor or PS solenoid valve.

(d) Make sure the engine is clear of all wiring, hoses and cables.

(e) Place the engine and transmission assembly onto the stand.

34. A/T:
REMOVE OIL DIPSTICK AND GUIDE FOR TRANSMISSION

(a) Remove the bolt.

(b) Pull out the dipstick and guide from the transmission.

(c) Remove the O-ring from the dipstick guide.

35. DISCONNECT ENGINE WIRE FROM TRANSMISSION

(a) Disconnect the connectors.

(b) Disconnect the wire clamps from the brackets.

36. REMOVE STARTER

(a) Disconnect the starter connector.

(b) Remove the 2 bolts, wire bracket and starter.

37. A/T:
REMOVE OIL COOLER TUBES FOR TRANSMISSION

(a) Remove the 2 hose clamp bolts and tube clamp bolt.

(b) Loosen the 2 union nuts, and remove the oil cooler tubes.

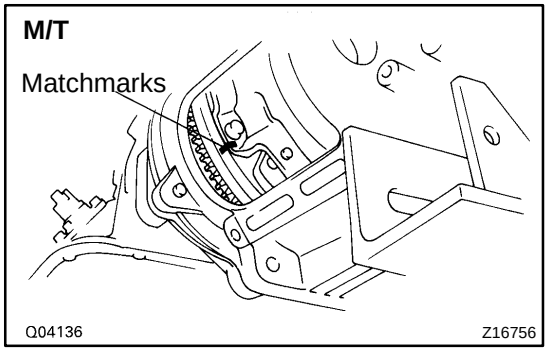

38. M/T:
REMOVE CLUTCH COVER SET BOLTS

(a) Remove the 2 bolts and service hole cover.

(b) Place the matchmarks on the flywheel and clutch cover.

(c) Remove the 6 bolts.

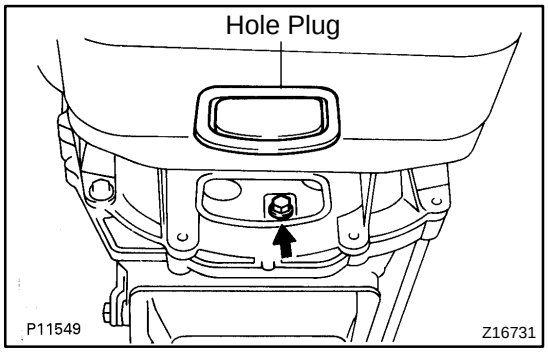

39. A/T:
REMOVE TORQUE CONVERTER CLUTCH MOUNTING BOLTS

(a) Remove the hole plug.

(b) Turn the crankshaft to gain access to each bolt. Remove the 6 bolts.

40. SEPARATE ENGINE AND TRANSMISSION

Remove the 6 bolts and transmission.

EM0AW-03

INSTALLATION

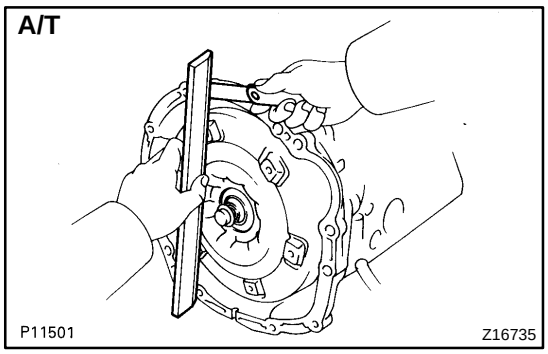

1. A/T:

CHECK TORQUE CONVERTER CLUTCH INSTALLATION

Using calipers and straight edge, measure from the installed surface of the torque converter clutch to the front surface of the transmission.

Correct distance: Less than 0.1 mm (0.004 in.)

If the distance is not as specified, check for an improper installation.

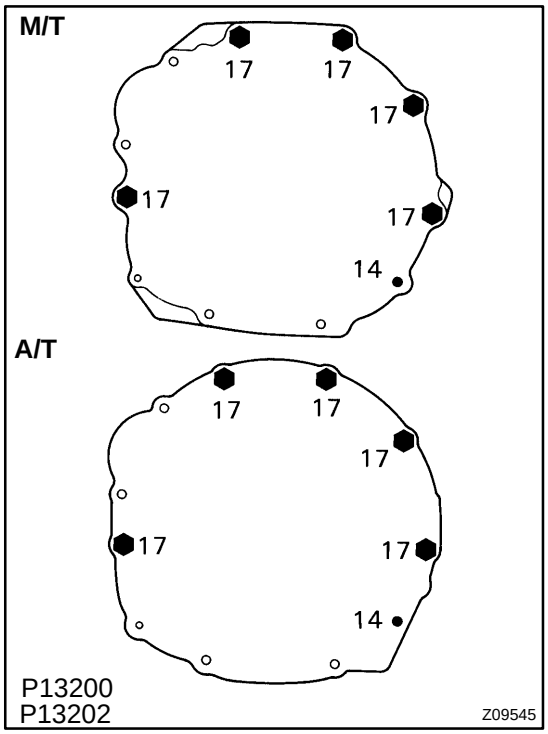

2. ASSEMBLE ENGINE AND TRANSMISSION

(a) M/T:
Align the input spline with the clutch disc and install the transmission to the engine.

(b) Align the 2 knock pins on the cylinder block with the pin holes of the clutch housing.

(c) Install the transmission with the 6 bolts.
Torque:
14 mm head 39 N·m (400 kgf·cm, 29 ft·lbf)
17 mm head 72 N·m (730 kgf·cm, 43 ft·lbf)

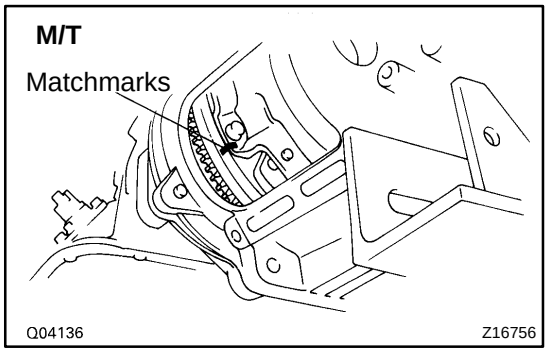

3. M/T:

INSTALL CLUTCH COVER SET BOLTS

(a) Align the matchmarks.

(b) Install the 6 bolts while turning the crankshaft to gain access. Tighten the bolts evenly.
Torque: 19 N·m (195 kgf·cm, 14 ft·lbf)

(c) Install the service hole cover with the 2 bolts.
Torque: 12 N·m (120 kgf·cm, 9 ft·lbf)

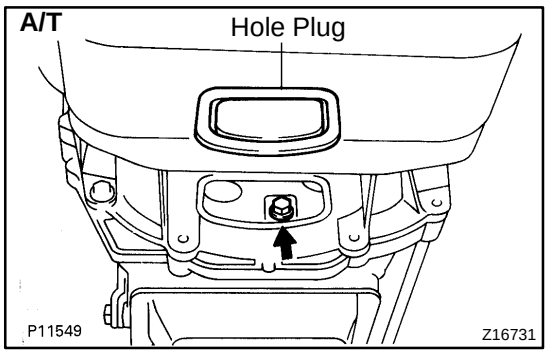

4. A/T:
INSTALL TORQUE CONVERTER CLUTCH MOUNTING BOLTS

(a) First, install the gray bolt. Then install 5 black bolts while turning the crankshaft to gain access. Tighten the bolts evenly.
Torque: 33 N·m (340 kgf·cm, 25 ft·lbf)

(b) Install the hole plug.

5. A/T:
INSTALL OIL COOLER PIPE FOR TRANSMISSION

(a) Temporarily install the 2 oil cooler pipe, 2 hose clamps and tube clamp with 3 clamp bolts.

(b) Connect the 2 oil cooler tubes to the unions on the transmission. Tighten the union nuts.
Torque:44 N·m (450 kgf·cm, 33 ft·lbf)

(c) Tighten the 3 clamp bolts.

6. INSTALL STARTER

7. CONNECT ENGINE WIRE TO TRANSMISSION

8. A/T:
INSTALL OIL DIPSTICK AND GUIDE FOR TRANSMISSION

(a) Install a new O-ring to the dipstick guide.

(b) Connect the dipstick guide end to the dipstick tube of the oil pan.

(c) Install the dipstick guide with the bolt.

(d) Install the dipstick.

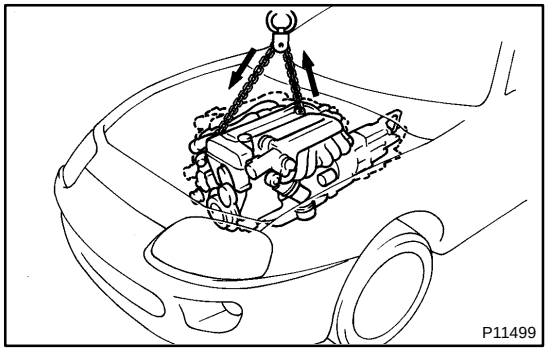

9. INSTALL ENGINE AND TRANSMISSION ASSEMBLY IN VEHICLE

(a) Attach the engine hoist chain to the engine hangers.

(b) Lower the engine and transmission assembly into the engine compartment.

NOTICE:
Install the engine and transmission assembly carefully without damaging the shift lever retainer (M/T), A/C compressor and PS solenoid valve.

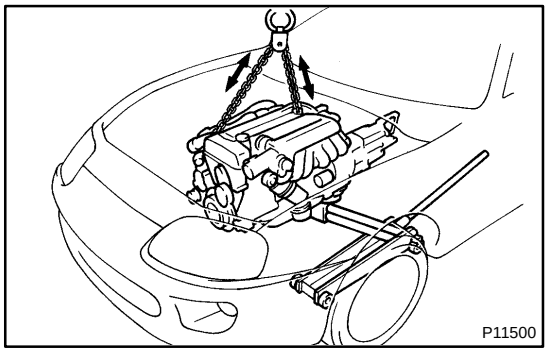

(c) Insert the stud bolts of the front engine mounting insulators into the stud bolt holes of the front suspension crossmember.

(d) Temporarily install the 2 nuts holding the engine front mounting insulators to the front suspension crossmember.

(e) Keep the engine level with a jack.

(f) Remove the hoist chain.

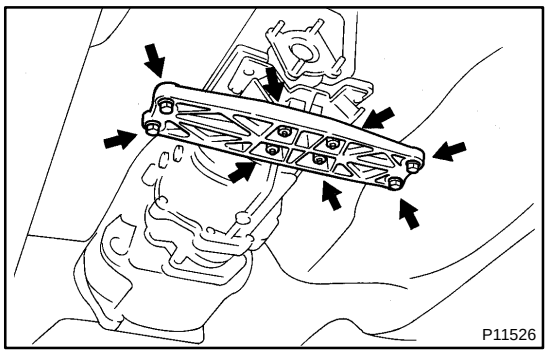

(g) Temporarily install the support member to the engine rear mounting insulator with the 4 nuts.

(h) Install the 4 bolts holding the support member to the body.
Torque: 25.5 N·m (260 kgf·cm, 19 ft·lbf)

(i) Tighten the 4 nuts holding the support member to the engine rear mounting insulator.
Torque: 13 N·m (135 kgf·cm, 10 ft·lbf)

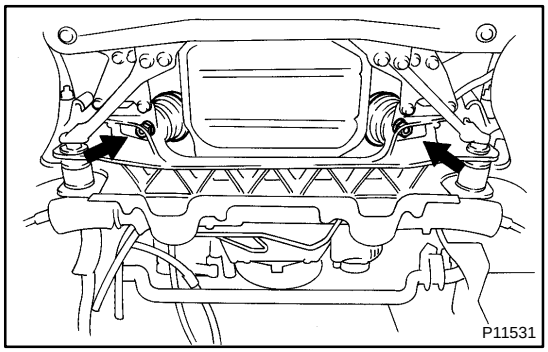

(j) Tighten the 2 nuts holding the engine front mounting insulators to the front suspension crossmember.
Torque:Torque: 59 N·m (600 kgf·cm, 43 ft·lbf)

10. M/T:
INSTALL TRANSMISSION SHIFT LEVER
Torque: 19 N·m (195 kgf·cm, 14 ft·lbf)

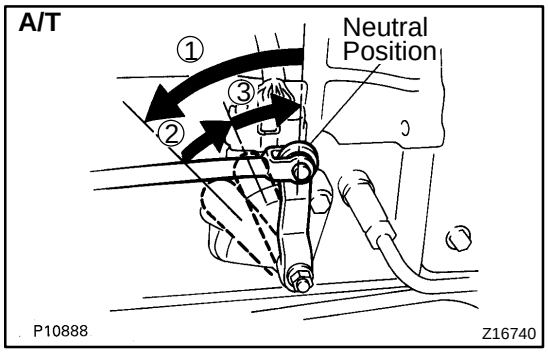

11. A/T:
CONNECT TRANSMISSION CONTROL ROD

(a) Shift the shift lever to N position.

(b) Fully turn the control shaft lever back and return 2 notches. It is now in neutral position.

(c) Connect the control rod to the shift lever with the nut.
Torque: 13 N·m (130 kgf·cm, 9 ft·lbf)

12. INSTALL PROPELLER SHAFT
(See page PR-1 1)

13. INSTALL REAR CENTER FLOOR CROSSMEMBER BRACE
Torque: 28 N·m (290 kgf·cm, 21 ft·lbf)

14. INSTALL EXHAUST PIPE HEAT INSULATOR

15. INSTALL NO.2 FRONT EXHAUST PIPE

Install a new gasket and the front exhaust pipe with 3 new nuts.
Torque: 62 N·m (630 kgf·cm, 46 ft·lbf)

16. INSTALL EXHAUST PIPE ASSEMBLY

(a) Install the hook of the tailpipe to the 2 rings on the tailpipe bracket.

(b) Install the hook of the exhaust pipe to the 2 rings on the exhaust pipe brackets.

(c) Install the pipe support bracket with the 2 bolts.
Torque: 43 N·m (440 kgf·cm, 32 ft·lbf)

(d) Install a new gasket and the No.2 front exhaust pipe to the front exhaust pipe with the 2 bolts and 2 new nuts.
Torque: 58 N·m (590 kgf·cm, 43 ft·lbf)

17. INSTALL HEATED OXYGEN SENSOR

Install a new gasket, the oxygen sensor and sensor cover with the 2 nuts.

Torque: 20 N·m (200 kgf·cm, 14 ft·lbf)

18. M/T:

INSTALL CLUTCH RELEASE CYLINDER AND GROUND STRAP

(a) Install the clutch release cylinder with the 2 bolts.
Torque: 13 N·m (130 kgf·cm, 9 ft·lbf)

(b) Connect the clutch line tube with the bolt.
Torque: 37 N·m (380 kgf·cm, 27 ft·lbf)

(c) Install the ground strap with the bolt.
Torque: 37 N·m (380 kgf·cm, 27 ft·lbf)

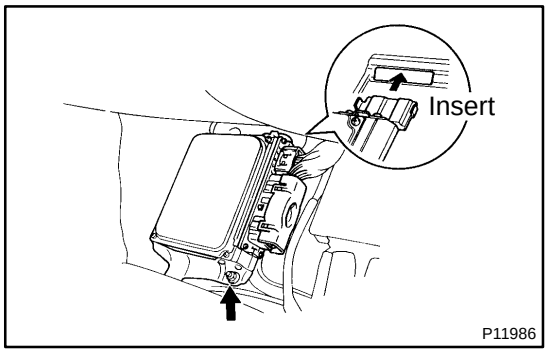

19. CONNECT ENGINE WIRE TO CABIN

(a) Push in the engine wire through the cowl panel.

NOTICE:

Be careful not to damage the engine wire.

(b) Connect the 2 connectors to the connector cassette.

(c) Connect the connector to the instrument panel wire connector.

(d) Connect the 2 connectors to the ECM.

(e) Connect the connector to the TRAC ECU.

(f) Insert the ECM bracket into the stay on the floor panel.

(g) Install the ECM with the nut.

(h) Install the ECM protector with the 2 nuts.

(i) Install the floor carpet.

(j) Install the scuff plate.

20. M/T:

INSTALL UPPER CONSOLE PANEL, SHIFT LEVER BOOTS AND HOLDING BOLTS

21. CONNECT ENGINE WIRE TO COWL PANEL

22. INSTALL A/C COMPRESSOR

(a) Using a torx socket (E10), install the stud bolt and compressor.
Torque: 26 N·m (265 kgf·cm, 19 ft·lbf)

(b) Connect the compressor connector.

(c) Temporarily install the compressor with nut and 3 bolts.

(d) Alternately tighten the bolt and nut.
Torque: 52 N·m (530 kgf·cm, 38 ft·lbf)

23. INSTALL PS PRESSURE FEED HOSE

Install the pressure feed hose with the 2 clamp bolts.

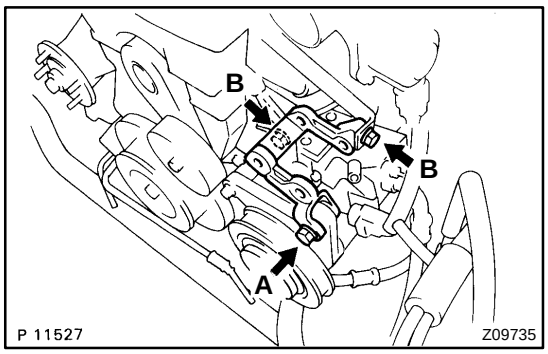

24. INSTALL PS PUMP

(a) Install the pump bracket with the 3 bolts.
Torque:
A 58 N·m (590 kgf·cm, 43 ft·lbf)
B 39 N·m (400 kgf·cm, 29 ft·lbf)

(b) Install the vane pump with the 2 bolts.
Torque: 58 N·m (590 kgf·cm, 43 ft·lbf)

(c) Connect these hoses:
- PS air hose to throttle body
- PS air hose to air intake chamber

25. CONNECT FUEL HOSES

(a) Connect the fuel return hose to the fuel return pipe.

(b) Install the fuel return hose to the clamp of the dipstick guide.

(c) Install the fuel inlet hose with 2 new gaskets and the union bolt.
Torque: 29 N·m (300 kgf·cm, 22 ft·lbf)

26. CONNECT WIRES AND CONNECTORS

27. CONNECT EVAP HOSE

28. CONNECT BRAKE BOOSTER VACUUM HOSE

29. CONNECT HEATER WATER HOSES

30. INSTALL CHARCOAL CANISTER

31. INSTALL WATER PUMP PULLEY, FAN, FLUID COUPLING ASSEMBLY AND DRIVE BELT
(See page CO-11)

32. M/T:
INSTALL DRIVE BELT TENSIONER DAMPER
(See page EM-21)

33. INSTALL AIR CLEANER AND MAF METER ASSEMBLY

34. INSTALL NO.1 AIR HOSE

35. CONNECT CONTROL CABLES TO THROTTLE BODY

36. FILL WITH ENGINE OIL

37. INSTALL RADIATOR ASSEMBLY
(See page CO-28)

38. START ENGINE AND CHECK FOR LEAKS

39. INSTALL HOOD

40. ROAD TEST

Check for abnormal noise, shock slippage, correct shift points and smooth operation.

41. RECHECK ENGINE COOLANT AND ENGINE OIL LEVELS

CYLINDER BLOCK

EM0AN-03

COMPONENTS

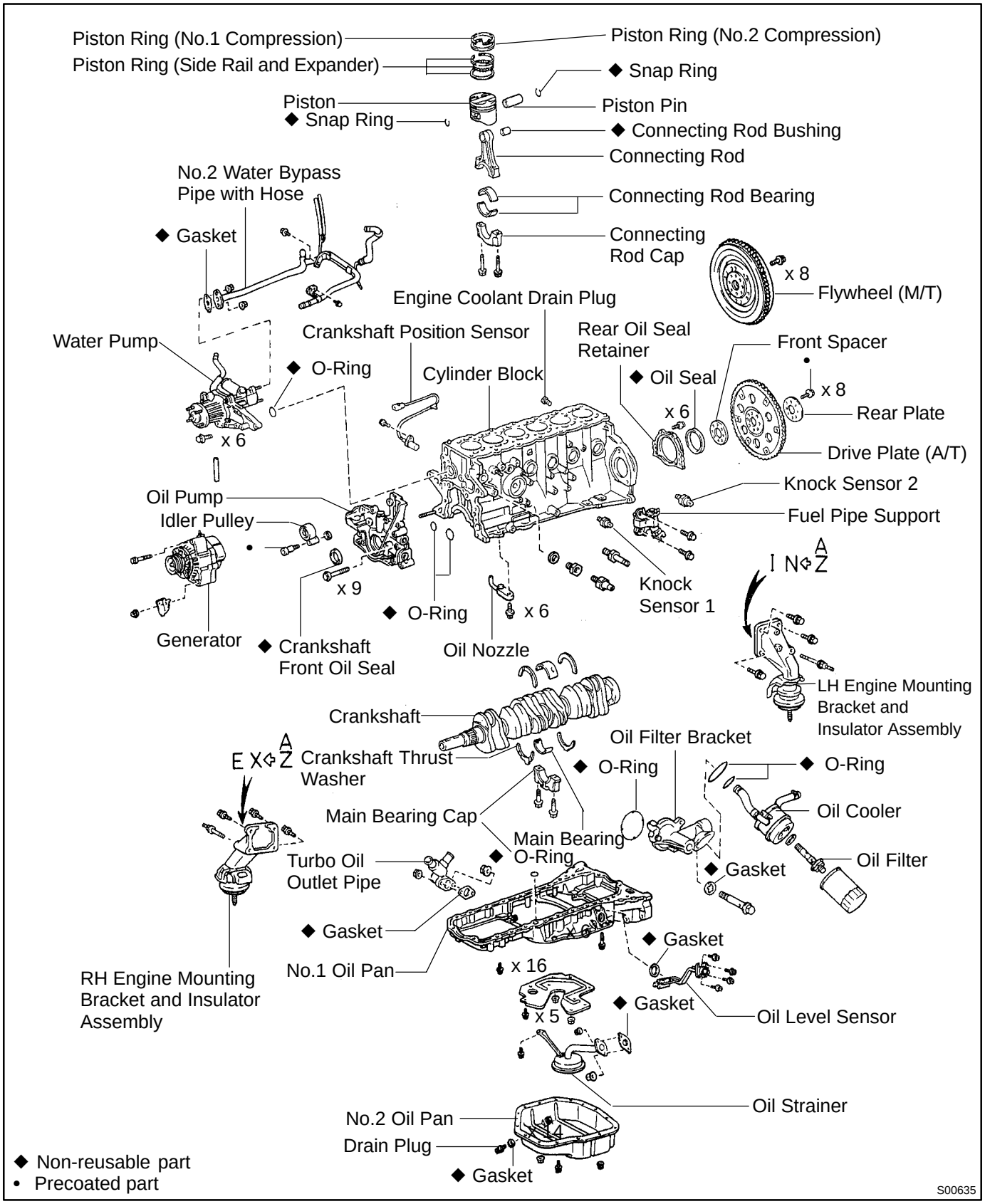

EM0AO-02

DISASSEMBLY

1. M/T:
REMOVE FLYWHEEL

2. A/T:
REMOVE DRIVE PLATE

3. INSTALL ENGINE TO ENGINE STAND FOR DISASSEMBLY

4. REMOVE GENERATOR

5. REMOVE TIMING BELT AND PULLEYS (See page EM-15)

6. REMOVE CYLINDER HEAD (See page EM-29)

7. REMOVE OIL COOLER (See page LU-20)

8. REMOVE NO.2 WATER BYPASS PIPE WITH HOSE

Remove the 2 bolts, 2 nuts, water bypass pipe and gasket.

9. REMOVE KNOCK SENSORS

Using SST, remove the switch and sensors.

SST 09816-30010

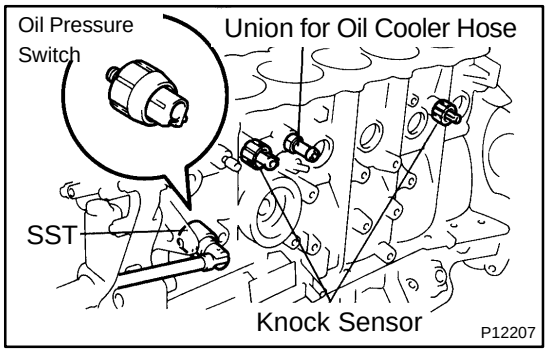

10. REMOVE OIL FILTER BRACKET

Remove the union bolt, gasket, oil filter bracket and O-ring.

11. REMOVE LH ENGINE MOUNTING BRACKET AND INSULATOR ASSEMBLY

12. REMOVE FUEL PIPE SUPPORT

13. REMOVE OIL PRESSURE SWITCH AND KNOCK SENSORS

(a) Using SST, remove the switch and sensors.
SST 09816-30010

(b) Remove the union nut and gasket.

14. REMOVE UNION FOR OIL COOLER HOSE

15. REMOVE ENGINE COOLANT DRAIN PLUG

16. REMOVE RH ENGINE MOUNTING BRACKET AND INSULATOR ASSEMBLY

17. REMOVE CRANKSHAFT POSITION SENSOR

18. REMOVE WATER PUMP (See page CO-7)

19. REMOVE OIL PUMP (See page LU-9)

20. REMOVE REAR OIL SEAL RETAINER

(a) Remove the 6 bolts.

(b) Remove the oil seal retainer by prying the area between the oil seal retainer and main bearing cap with a screwdriver.

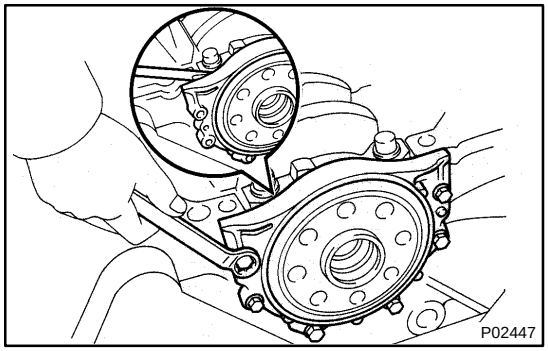

21. CHECK CONNECTING ROD THRUST CLEARANCE

Using a dial indicator, measure the thrust clearance while moving the connecting rods back and forth.

Standard thrust clearance:
0.250 - 0.402 mm (0.0098 - 0.0158 in.)
Maximum thrust clearance:
0.50 mm (0.0197 in.)

If the thrust clearance is greater than maximum, replace the connecting rod assembly(s). If necessary, replace the crankshaft.

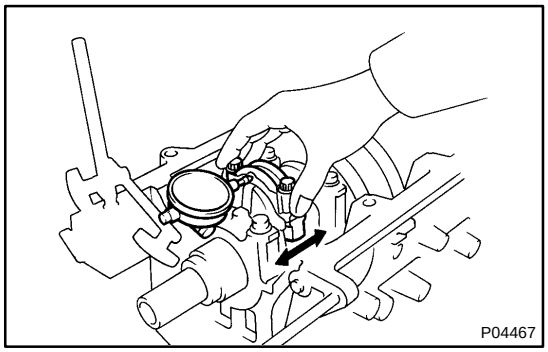

Connecting rod thickness:
25.898 - 25.950 mm (1.0196 - 1.0217 in.)

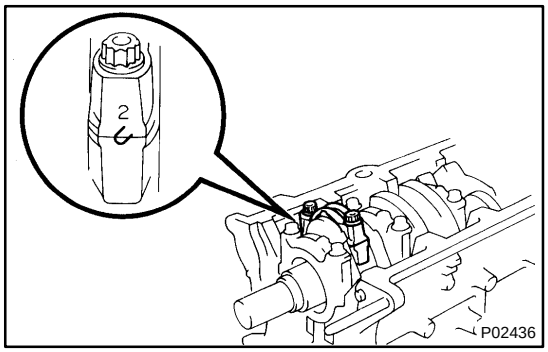

22. REMOVE CONNECTING ROD CAPS AND CHECK OIL CLEARANCE

(a) Check the matchmarks on the connecting rod and cap to ensure correct reassembly.

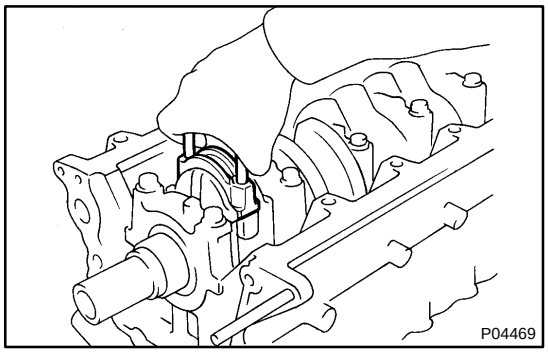

(b) Remove the connecting rod cap bolts.

(c) Using the 2 removed connecting rod bolts, remove the connecting rod cap and lower bearing by wiggling the connecting rod cap right and left.

HINT:
Keep the lower bearing inserted with the connecting rod cap.

(d) Clean the crank pin and bearings.

(e) Check the crank pin and bearing for pitting and scratches.

If the crank pin or bearing is damaged, replace the bearings. If necessary, replace the crankshaft.

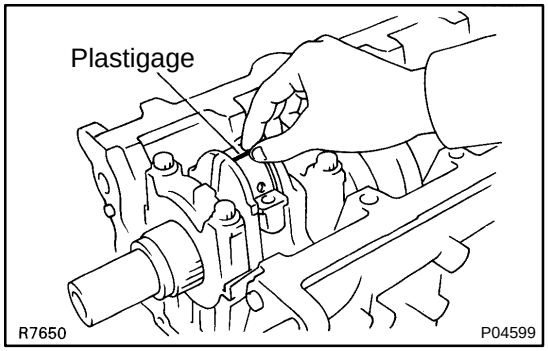

(f) Lay a strip of Plastigage across the crank pin.

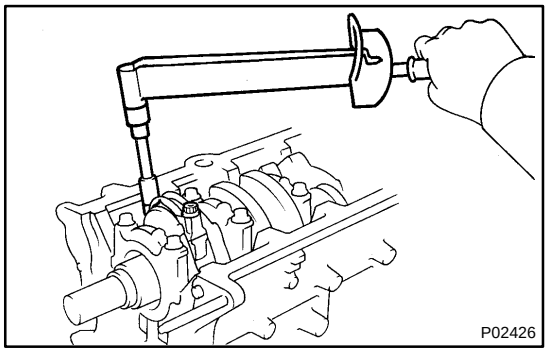

(g) Install the connecting rod cap with the 2 bolts.
(See page EM-88)
1st 29 N·m (300 kgf·cm, 22 ft·lbf)
2nd Turn extra 90°

NOTICE:
Do not turn the crankshaft.

(h) Remove the 2 bolts, connecting rod cap and lower bearing. (See procedure step (b) and (c))

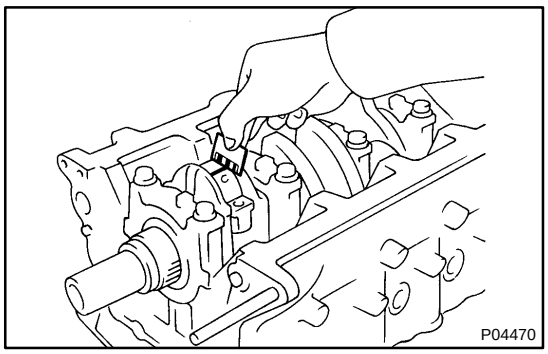

(i) Measure the Plastigage at its widest point.
Standard oil clearance:
STD 0.023 - 0.041 mm (0.0009 - 0.0016 in.)
U/S 0.25 0.028 - 0.066 mm (0.0011 - 0.0026 in.)
Maximum oil clearance.
STD 0.07 mm (0.0027 in.)
U/S 0.25 0.08 mm (0.0031 in.)
If the oil clearance is greater than maximum, replace the bearings. If necessary, grind or replace the crankshaft.

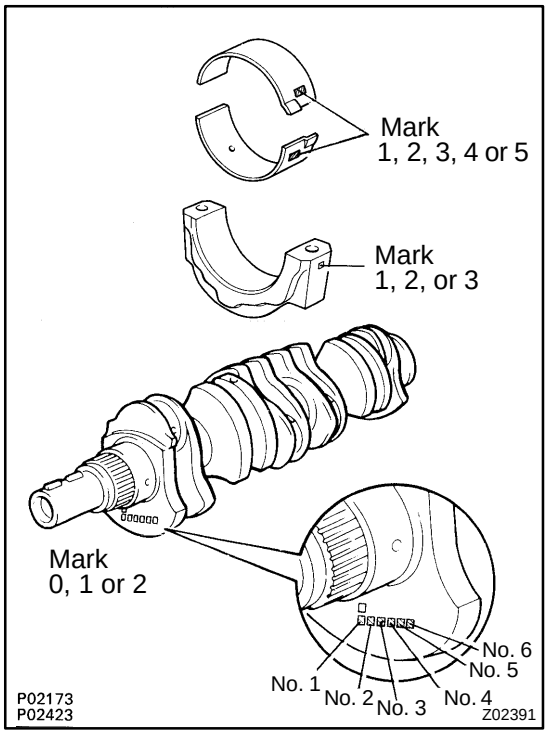

HINT:
If using a standard bearing, replace with one having the same number. If the number of the bearing cannot be determined, select the correct bearing by adding together the numbers imprinted on the connecting rod cap and crankshaft, then selecting the bearing with the same number as the total. There are 5 sizes of standard bearings, marked ”1”, ”2”, ”3”, ”4” and ”5” accordingly.

	Number mark								
Connecting rod cap	1			2			3		
Crankshaft	0	1	2	0	1	2	0	1	2
Use bearing	1	2	3	2	3	4	3	4	5

EXAMPLE: Connecting rod cap ”3” +Crankshaft ”1”
= Total number 4 (Use bearing ”4”)

Reference:
Connecting rod big end inside diameter:

Mark ”1”	55.025 - 55.031 mm (2.1663 - 2.1666 in.)
Mark ”2”	55.031 - 55.037 mm (2.1666 - 2.1668 in.)
Mark ”3”	55.037 - 55.043 mm (2.1668 - 2.1670 in.)

Crankshaft crank pin diameter:

Mark ”0”	51.994 - 52.000 mm (2.0470 - 2.0472 in.)
Mark ”1”	51.988 - 51.994 mm (2.0468 - 2.0470 in.)
Mark ”2”	51.982 - 51.988 mm (2.0465 - 2.0468 in.)

Bearing center wall thickness:

Mark ”1”	1.498 - 1.501 mm (0.0590 - 0.0591 in.)
Mark ”2”	1.501 - 1.504 mm (0.0591 - 0.0592 in.)
Mark ”3”	1.504 - 1.507 mm (0.0592 - 0.0593 in.)
Mark ”4”	1.507 - 1.510 mm (0.0593 - 0.0594 in.)
Mark ”5”	1.510 - 1.513 mm (0.0594 - 0.0596 in.)

(j) Completely remove the Plastigage.

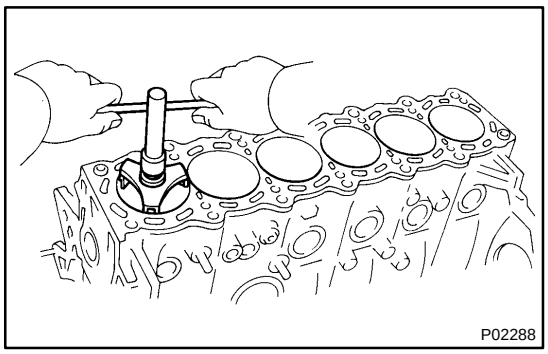

23. REMOVE PISTON AND CONNECTING ROD ASSEMBLIES

(a) Using a ridge reamer, remove all the carbon from the top of the cylinder.

(b) Push the piston, connecting rod assembly and upper bearing through the top of the cylinder block.

HINT:

- Keep the bearings, connecting rod and cap together.
- Arrange the piston and connecting rod assemblies in correct order.

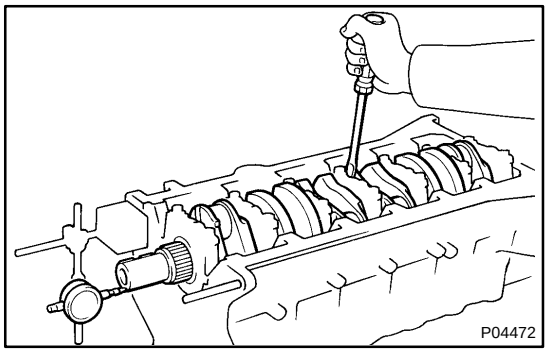

24. CHECK CRANKSHAFT THRUST CLEARANCE

Using a dial indicator, measure the thrust clearance while prying the crankshaft back and forth with a screwdriver.

Standard thrust clearance:
0.020 - 0.220 mm (0.0008 - 0.0087 in.)
Maximum thrust clearance:
0.30 mm (0.0118 in.)

If the thrust clearance is greater than maximum, replace the thrust washers as a set.

Thrust washer thickness:
1.940 - 1.990 mm (0.0764 - 0.0783 in.)

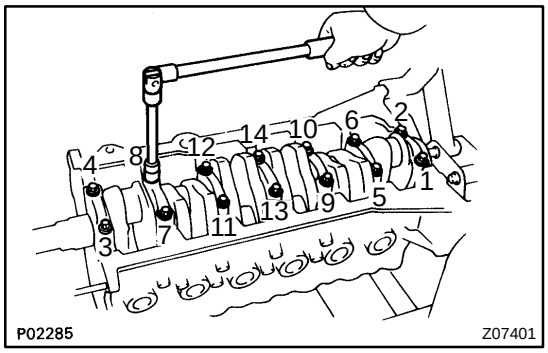

25. REMOVE MAIN BEARING CAPS AND CHECK OIL CLEARANCE

(a) Uniformly loosen and remove the 14 main bearing cap bolts, in several passes, in the sequence shown.

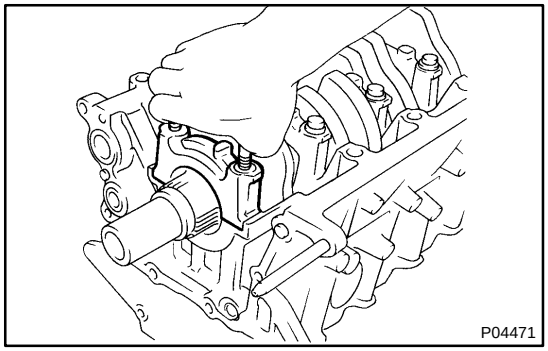

(b) Using the removed main bearing cap bolts, pry the main bearing cap back and forth, and remove the main bearing caps, lower bearings and lower thrust washers (No.4 main bearing cap only).

HINT:

- Keep the lower bearing and main bearing cap together.
- Arrange the main bearing caps and lower thrust washers in correct order.

(c) Lift out the crankshaft.

HINT:

Keep the upper bearing and upper thrust washers together with the cylinder block.

(d) Clean each main journal and bearing.

(e) Check each main journal and bearing for pitting and scratches.

If the journal or bearing is damaged, replace the bearings. If necessary, grind or replace the crankshaft.

(f) Place the crankshaft on the cylinder block.

(g) Lay a strip of Plastigage across each journal.

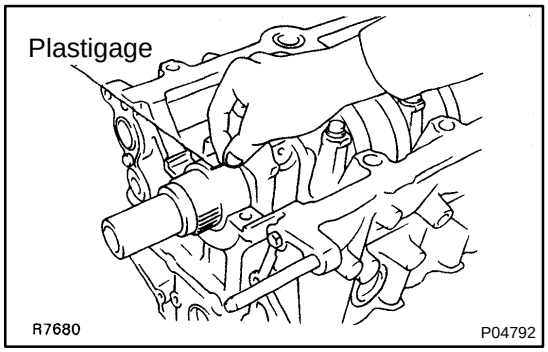

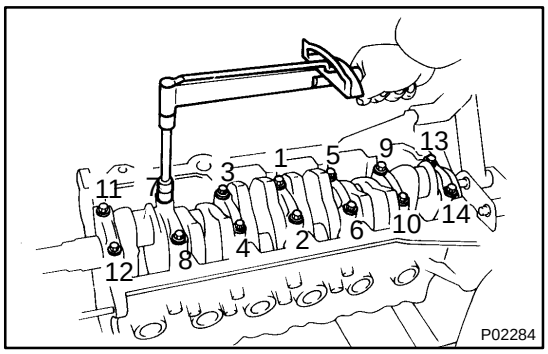

(h) Install the main bearing caps.(See page EM-88)
Torque:
1st 44 N·m (450 kgf·cm, 33 ft·lbf)
2nd Turn extra 90°

NOTICE:
Do not turn the crankshaft.

(i) Remove the main bearing caps.
(See procedure step (a) and (b))

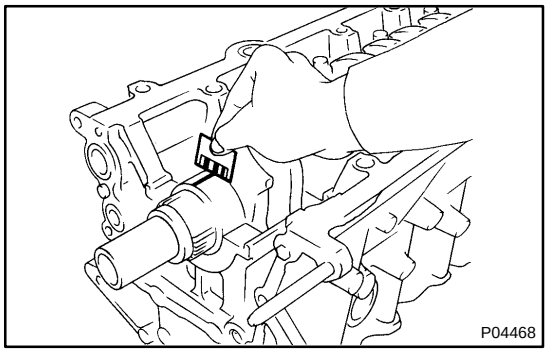

(j) Measure the Plastigage at its widest point.
Standard clearance:
STD 0.026 - 0.040 mm (0.0010 - 0.0016 in.)
U/S 0.25 0.025 - 0.061 mm (0.0010 - 0.0024 in.)
Maximum clearance:
STD 0.06 mm (0.0024 in.)
U/S 0.25: 0.08 mm (0.0031 in.)

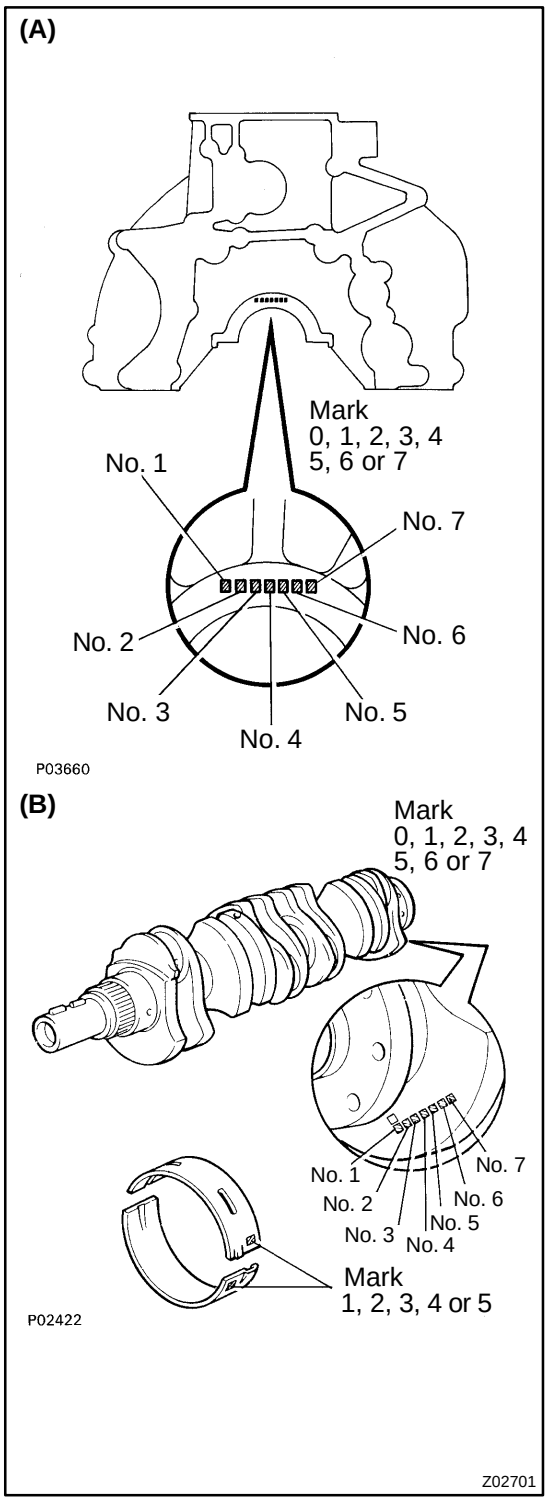

If the oil clearance is greater than maximum, replace the bearings. If necessary, grind or replace the crankshaft.

HINT:

If using a standard bearing, replace with one having the same number. If the number of the bearing cannot be determined, select the correct bearing by adding together the numbers imprinted on the cylinder block and crankshaft, then refer to the table below for the appropriate bearing number. There are 5 sizes of standard bearings, marked ”1”, ”2”, ”3”, ”4” and ”5” accordingly.

Standard sized bearing selection chart

	Total number			” ”:Number mark	
Cylinder block (A) + Cankshaft (B) =	0 - 2	3 - 5	6 - 8	9 - 11	12 - 14
Use bearing	”1”	”2”	”3”	”4”	”5”

EXAMPLE: Cylinder block ”3” (A) + Crankshaft ”4”(B)
= Total number 7 (Use bearing ”3”)

Crankshaft number mark	Cylinder block number mark							
	0	1	2	3	4	5	6	7
0	1	1	1	2	2	2	3	3
1	1	1	2	2	2	3	3	3
2	1	2	2	2	3	3	3	4
3	2	2	2	3	3	3	4	4
4	2	2	3	3	3	4	4	4
5	2	3	3	3	4	4	5	5
6	3	3	3	4	4	5	5	5
7	3	3	4	4	5	5	5	5

EXAMPLE: Cylinder block ”3” Crankshaft ”4”
= Use bearing ”3”

Reference:

Cylinder block main journal bore diameter (A):

Mark ”0”	66.020 - 66.022 mm (2.59922 - 2.59929 in.)
Mark ”1”	66.022 - 66.024 mm (2.59929 - 2.59936 in.)
Mark ”2”	66.024 - 66.026 mm (2.59936 - 2.59944 in.)
Mark ”3”	66.026 - 66.028 mm (2.59944 - 2.59952 in.)
Mark ”4”	66.028 - 66.030 mm (2.59952 - 2.59960 in.)
Mark ”5”	66.030 - 66.032 mm (2.59960 - 2.59968 in.)
Mark ”6”	66.032 - 66.034 mm (2.59968 - 2.59976 in.)
Mark ”7”	66.034 - 66.036 mm (2.59976 - 2.59984 in.)

Crankshaft main journal diameter (B):

Mark ”0”	61.998 - 62.000 mm (2.44086 - 2.44094 in.)
Mark ”1”	61.996 - 61.998 mm (2.44078 - 2.44086 in.)
Mark ”2”	61.994 - 61.996 mm (2.44070 - 2.44078 in.)
Mark ”3”	61.992 - 61.994 mm (2.44063 - 2.44070 in.)
Mark ”4”	61.990 - 61.992 mm (2.44055 - 2.44063 in.)
Mark ”5”	61.988 - 61.990 mm (2.44047 - 2.44055 in.)
Mark ”6”	61.986 - 61.988 mm (2.44039 - 2.44047 in.)
Mark ”7”	61.984 - 61.986 mm (2.44031 - 2.44039 in.)

Bearing center wall thickness:

Mark ”1”	1.994 - 1.997 mm (0.0785 - 0.0786 in.)
Mark ”2”	1.997 - 2.000 mm (0.0786 - 0.0787 in.)
Mark ”3”	2.000 - 2.003 mm (0.0787 - 0.0789 in.)
Mark ”4”	2.003 - 2.006 mm (0.0789 - 0.0790 in.)
Mark ”5”	2.006 - 2.009 mm (0.0790 - 0.0791 in.)

(k) Completely remove the Plastigage.

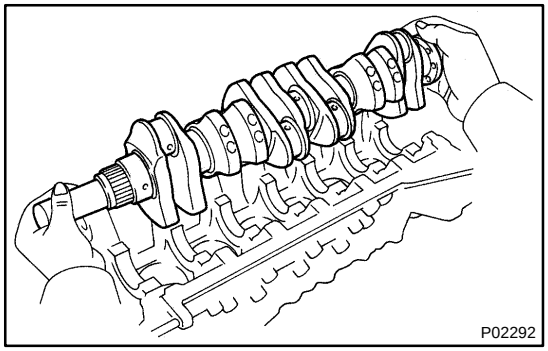

26. REMOVE CRANKSHAFT

(a) Lift out the crankshaft

(b) Remove the upper bearings and upper thrust washers from the cylinder block.

HINT:

Arrange the main bearing caps, bearings and thrust washers in the correct order.

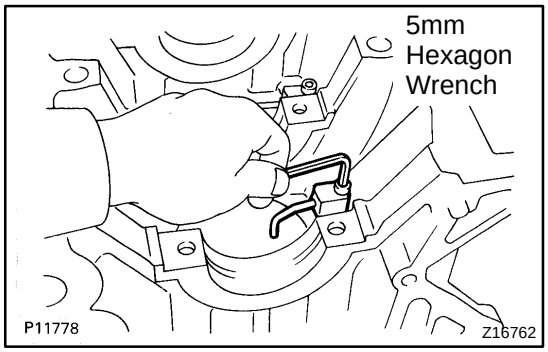

27. REMOVE OIL NOZZLES (WITH RELIEF VALVES)

Using a 5 mm hexagon wrench, remove the bolt and oil nozzle. Remove the 6 oil nozzles.

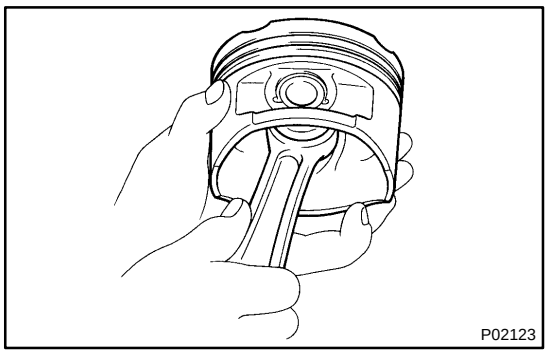

28. CHECK FIT BETWEEN PISTON AND PISTON PIN

Try to move the piston back and forth on the piston pin.
If any movement is felt, replace the piston and pin as a set.

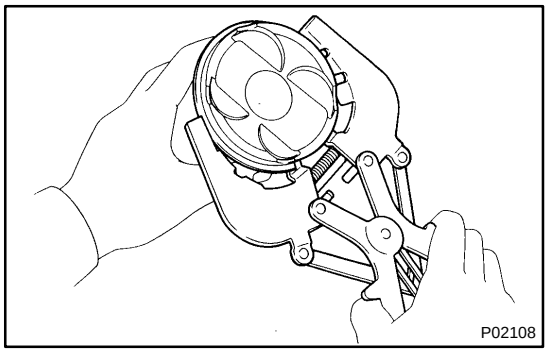

29. REMOVE PISTON RINGS

(a) Using a piston ring expander, remove the 2 compression rings.
(b) Remove the 2 side rails and oil ring expander by hand.

HINT:
Arrange the piston rings in correct order only.

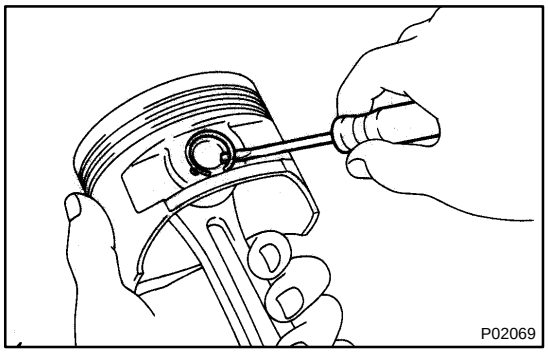

30. DISCONNECT CONNECTING ROD FROM PISTON

(a) Using a small screwdriver, remove the 2 snap rings.

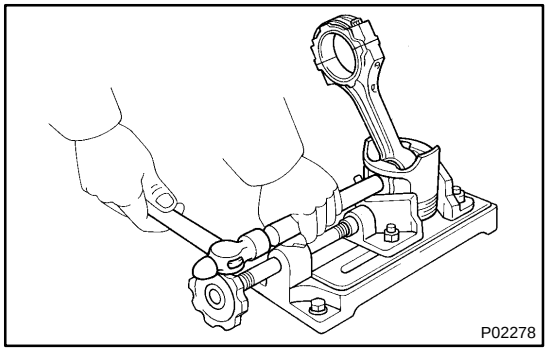

(b) Gradually heat the piston to about 80˚C (176˚F).
(c) Using a plastic-faced hammer and brass bar, lightly tap out the piston pin and remove the connecting rod.

HINT:
- The piston and pin are a matched set.
- Arrange the pistons, pins, rings, connecting rods and bearings in the correct order.

EM0AP-02

INSPECTION

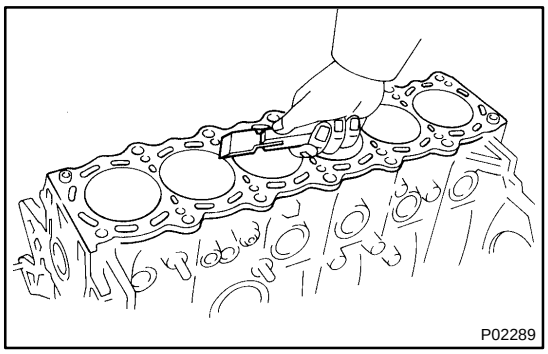

1. REMOVE GASKET MATERIAL

Using a gasket scraper, remove all the gasket material from the cylinder block surface.

2. CLEAN CYLINDER BLOCK

Using a soft brush and solvent, thoroughly clean the cylinder block.

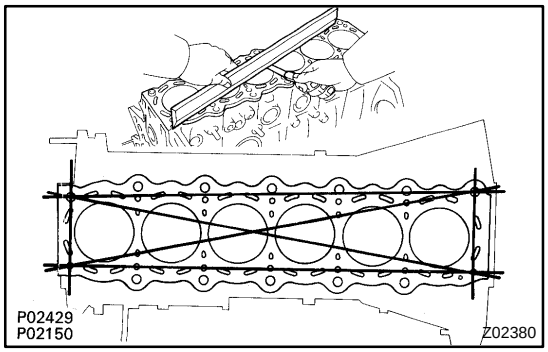

3. INSPECT CYLINDER BLOCK SURFACE FOR FLATNESS

Using precision straight edge and feeler gauge, measure the surfaces of the cylinder block for warpage.

Maximum warpage: 0.07 mm (0.0028 in.)

If warpage is greater than maximum, replace the cylinder block.

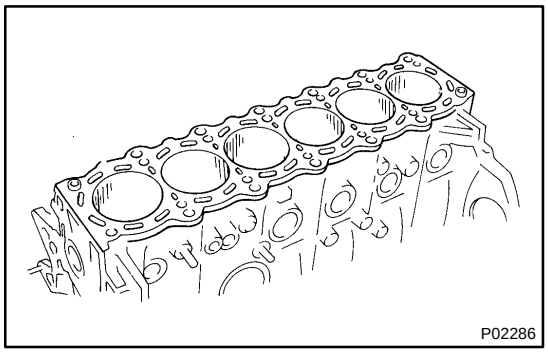

4. INSPECT CYLINDER FOR VERTICAL SCRATCHES

Visually check the cylinder for vertical scratches.

If deep scratches are present, replace the cylinder block.

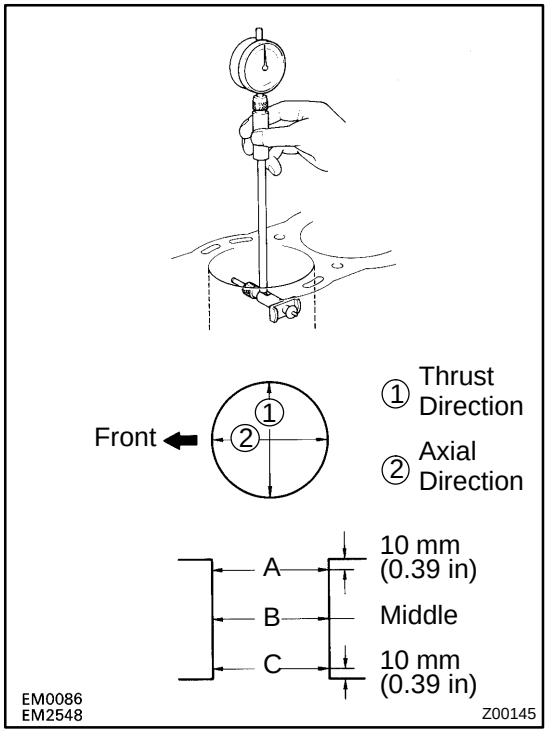

5. INSPECT CYLINDER BORE DIAMETER

Using a cylinder gauge, measure the cylinder bore diameter at positions A, B and C in the thrust and axial directions.

Standard diameter:
86.000 - 86.013 mm (3.3858 - 3.3863 in.)
Maximum diameter: 86.02 mm (3.3866 in.)

If the diameter is greater than maximum, replace the cylinder block.

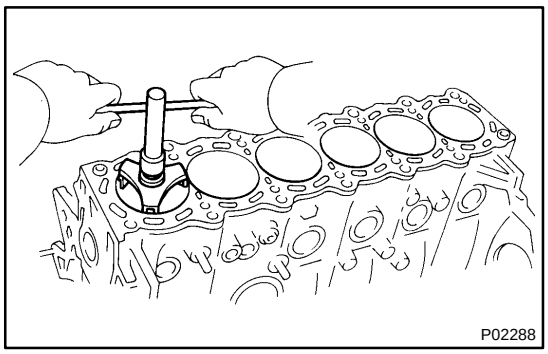

6. REMOVE CYLINDER RIDGE

If the wear is less than 0.2 mm (0.008 in.), using a ridge reamer, grind the top of the cylinder.

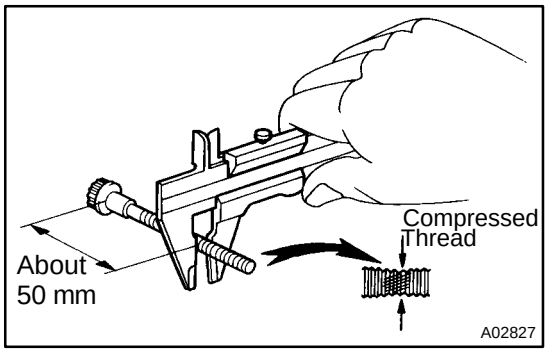

7. INSPECT MAIN BEARING CAP BOLTS

Using vernier calipers, measure the minimum diameter of the compressed thread at the measuring point.

Standard diameter:
9.96 - 9.97 mm (0.3921 - 0.3925 in.)
Minimum diameter: 9.7 mm (0.382 in.)

If the diameter is less than minimum, replace the bolt.

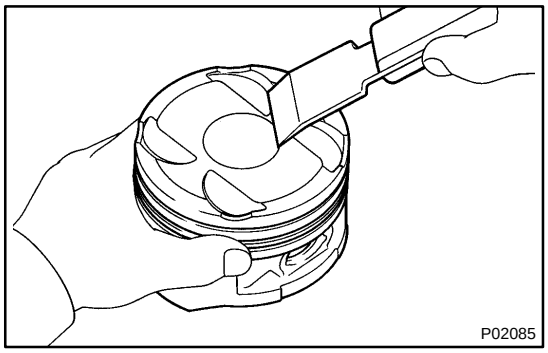

8. CLEAN PISTON

(a) Using a gasket scraper, remove the carbon from the piston top.

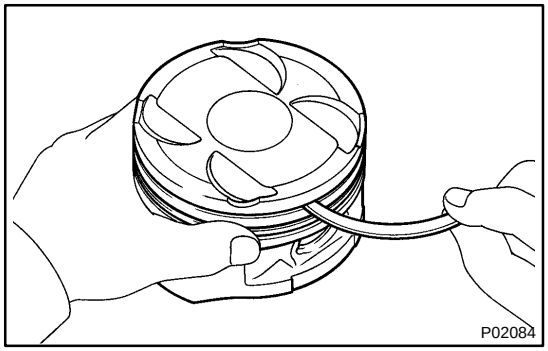

(b) Using a groove cleaning tool or broken ring, clean the piston ring grooves.

(c) Using solvent and a brush, thoroughly clean the piston.

NOTICE:

Do not use a wire brush.

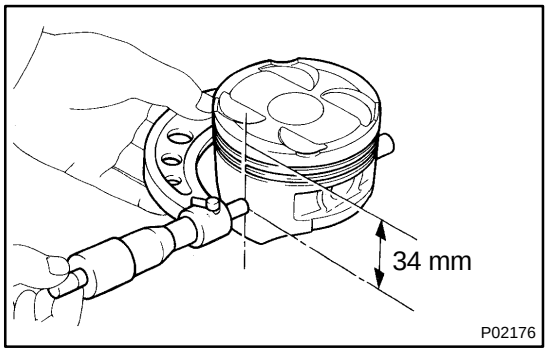

9. INSPECT PISTON OIL CLEARANCE

(a) Using a micrometer, measure the piston diameter at right angles to the piston pin center line, 34 mm (1.34 in.) from the piston head.

Piston diameter:
85.917 - 85.927 mm (3.3826 - 3.3830 in.)

(b) Measure the cylinder bore diameter in the thrust directions. (See step 5)

(c) Subtract the piston diameter measurement from the cylinder bore diameter measurement.

Standard oil clearance:
0.073 - 0.096 mm (0.0029 - 0.0038 in.)
Maximum oil clearance:
0.12 mm (0.0047 in.)

If the oil clearance is greater than maximum, replace all the 6 pistons. If necessary, replace the cylinder block.

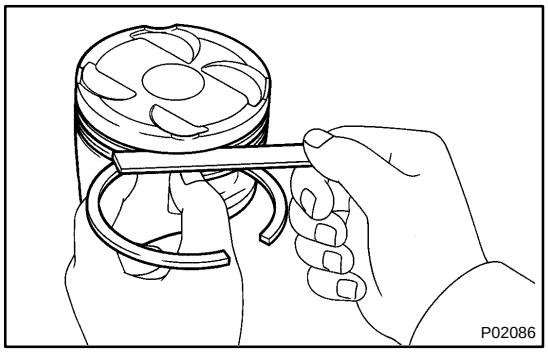

10. INSPECT PISTON RING GROOVE CLEARANCE

Using a feeler gauge, measure the clearance between new piston ring and the wall of the piston ring groove.

Ring groove clearance:
No.1 0.040 - 0.080 mm (0.0016 - 0.0031 in.)
No.2 0.030 - 0.070 mm (0.0012 - 0.0028 in.)

If the clearance is not as specified, replace the piston.

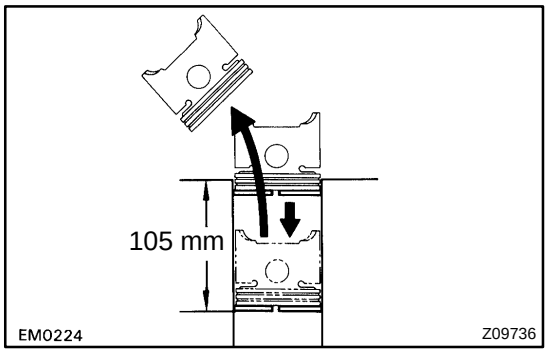

11. INSPECT PISTON RING END GAP

(a) Insert the piston ring into the cylinder bore.

(b) Using a piston, push the piston ring a little beyond the bottom of the ring travel, 105 mm (4.13 in.) from the top of the cylinder block.

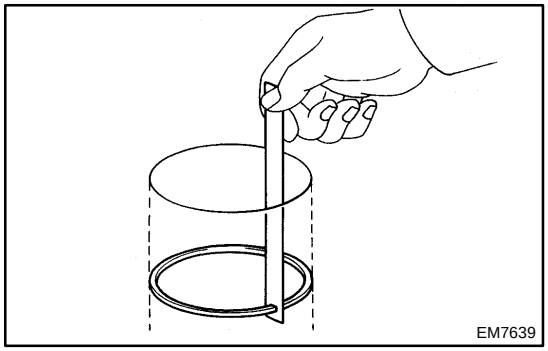

(c) Using a feeler gauge, measure the ring end gap.

Ring end gap:

Piston ring	STD mm (in.)	Maximum mm (in.)
No.1	0.300 - 0.400 (0.0118 - 0.0157)	1.000 (0.0394)
No.2	0.350 - 0.450 (0.0138 - 0.0178)	1.050 (0.0413)
Oil (Side rail)	0.130 - 0.380 (0.0051 - 0.0150)	0.980 (0.0386)

If the end gap is greater than maximum, replace the piston ring. If the end gap is greater than maximum, even with a new piston ring, replace the cylinder block.

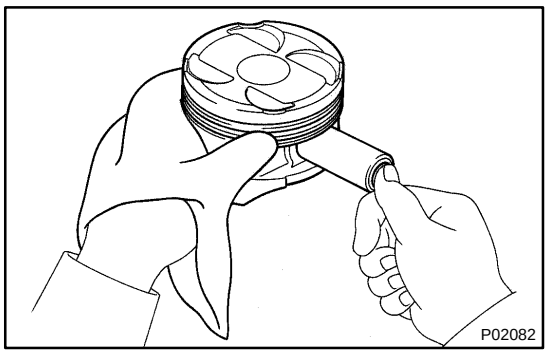

12. PINSPECT PISTON PIN FIT

At 80˚C (176˚F), you should be able to push the piston pin into the piston pin hole with your thumb.

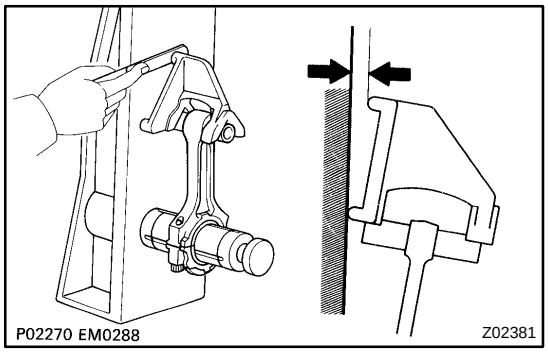

13. INSPECT CONNECTING ROD ALIGNMENT

Using a feeler gauge and rod aligner, check the connecting rod alignment.

- Check for out-of-alignment

Maximum out-of-alignment:
0.05 mm (0.0020 in.) per 100 mm (3.94 in.)

If out-of-alignment is greater than maximum, replace the connecting rod assembly.

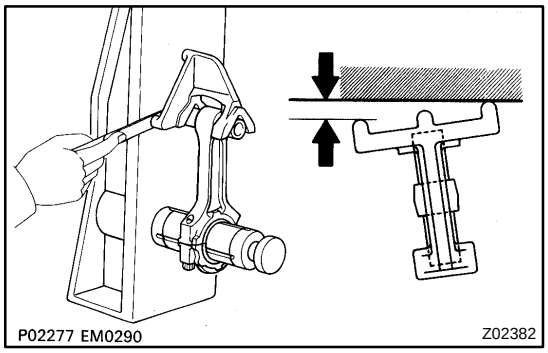

- Check for twist

Maximum twist:
0.15 mm (0.0059 in.) per 100 mm (3.94 in.)

If twist is greater than maximum, replace the connecting rod assembly.

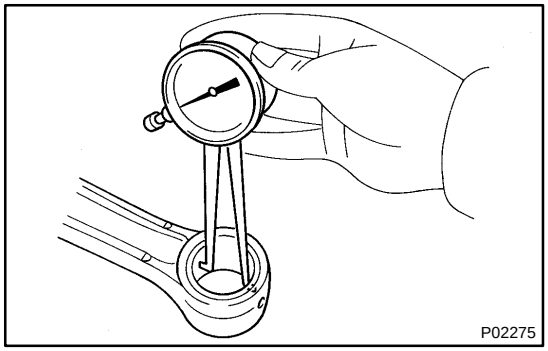

14. INSPECT PISTON PIN OIL CLEARANCE

(a) Using a caliper gauge, measure the inside diameter of the connecting rod bushing.
Bushing inside diameter:
22.005 - 22.014 mm (0.8663 - 0.8667 in.)

(b) Using a micrometer, measure the piston pin diameter.
Piston pin diameter:
21.997 - 22.006 mm (0.8660 - 0.8664 in.)

(c) Subtract the piston pin diameter measurement from the bushing inside diameter measurement.
Standard oil clearance:
0.005 - 0.011 mm (0.0002 - 0.0004 in.)
Maximum oil clearance:
0.05 mm (0.0020 in.)

If the oil clearance is greater than maximum, replace the bushing. If necessary, replace the piston and piston pin as a set.

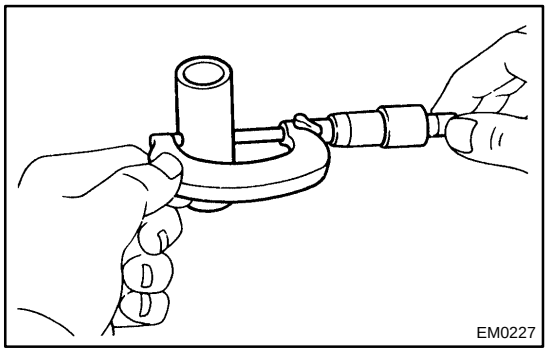

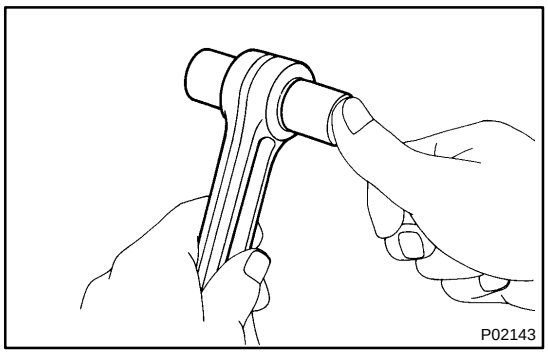

(d) Check the piston pin fit at room temperature.
Coat the piston pin with engine oil and push it into the connecting rod with your thumb.

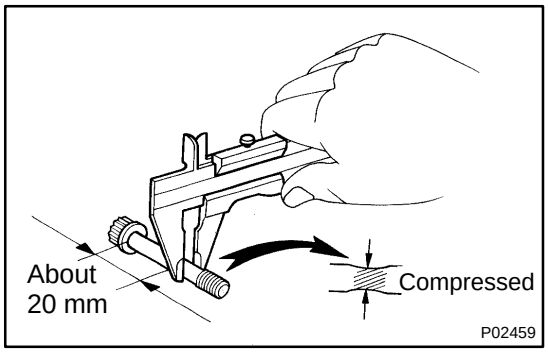

15. INSPECT CONNECTING ROD BOLTS

Using vernier calipers, measure the minimum diameter of the compressed bolt at the measuring point.

Standard diameter: 8.1 - 8.3 mm (0.319 - 0.327 in.)
Minimum diameter: 8.0 mm (0.315 in.)

If the diameter is less than minimum, replace the connecting rod bolt.

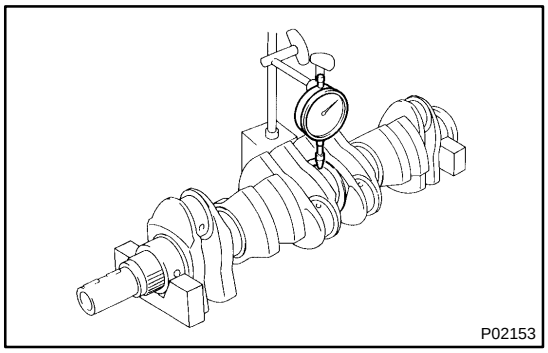

16. INSPECT CRANKSHAFT FOR RUNOUT

(a) Place the crankshaft on V-blocks.
(b) Using a dial indicator, measure the circle runout at the center journal.
Maximum circle runout: 0.06 mm (0.0024 in.)

If the circle runout is greater than maximum, replace the crankshaft.

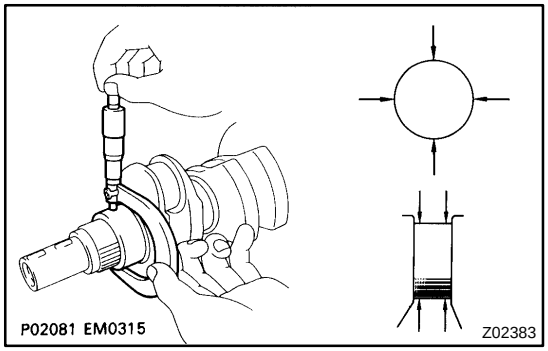

17. INSPECT MAIN JOURNALS AND CRANK PINS

(a) Using a micrometer, measure the diameter of each main journal and crank pin.
Diameter:

Item	STD mm (in.)	U/S 0.25 mm (in.)
Main journal	61.984 - 62.000 (2.4403 - 2.4409)	61.745 - 61.755 (2.4309 - 2.4313)
Crank pin	51.982 - 52.000 (2.0465 - 2.0472)	51.745 - 51.755 (0.0372 - 2.0376)

If the diameter is not as specified, check the oil clearance. (See page EM-71)

(b) Check each main journal and crank pin for taper and out-of-round as shown.
Maximum taper and out-of round:
0.02 mm (0.0008 in.)

If the taper or out-of-round is greater than maximum, grind or replace the crankshaft.

18. IF NECESSARY, GRIND AND HONE MAIN JOURNALS AND/OR CRANK PINS

(a) Grind and hone the main journals and/or crank pins to the finished undersized diameter
(See procedure step 17).

(b) Install new main journal and/or crank pin undersized bearings.

EM0AQ-02

REPLACEMENT

HINT:

There are 2 methods A and B to replace the oil seal as follows:

1. REPLACE CRANKSHAFT FRONT OIL SEAL

(a) If oil pump is removed from cylinder block.

(1) Using a screwdriver, pry out the oil seal.

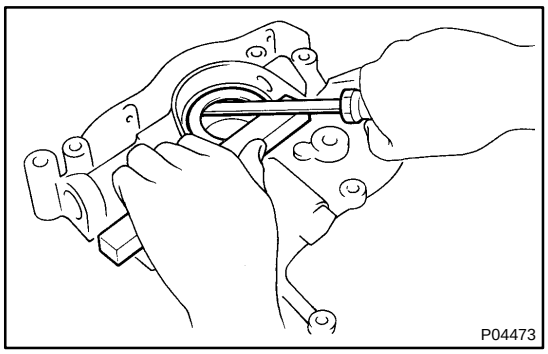

(2) Using SST and a hammer, tap in a new oil seal until its surface is flush with the oil pump body edge.

SST 09316-6001 1 (09316-00011)

(3) Apply MP grease to the oil seal lip.

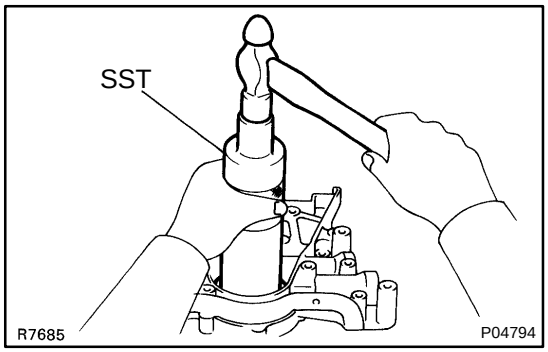

(b) If oil pump is installed on cylinder block:

(1) Using a knife, cut off the oil seal lip.

(2) Using a screwdriver, pry out the oil seal.

NOTICE:

Be careful not to damage the crankshaft. Tape the screwdriver tip.

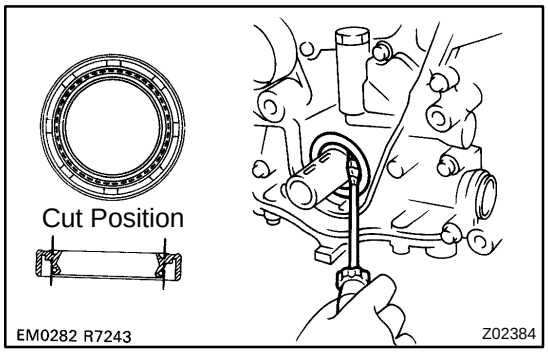

(3) Apply MP grease to a new oil seal lip.

(4) Using SST and a hammer, tap in the oil seal until its surface is flush with the oil pump body edge.

SST 09316-6001 1 (09316-00011)

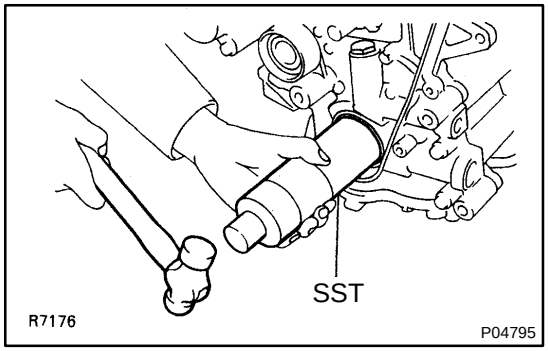

2. REPLACE CRANKSHAFT REAR OIL SEAL

(a) If rear oil seal retainer is removed from cylinder block:

(1) Using a screwdriver and hammer, tap out the oil seal.

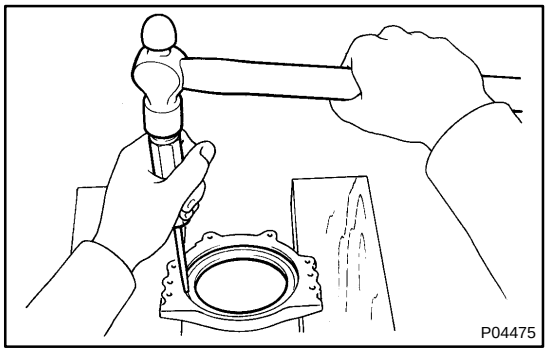

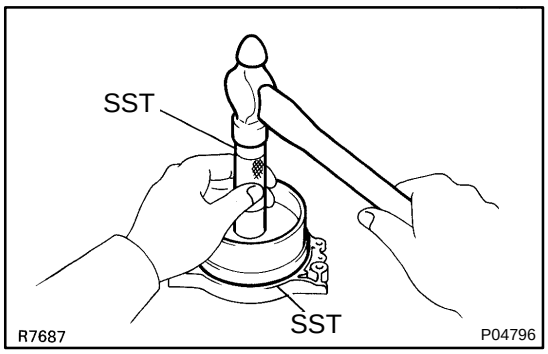

(2) Using SST and a hammer, tap in a new oil seal until its surface is flush with the rear oil seal retainer edge.
SST 09223-15030, 09950-70010 (09951-07100)
(3) Apply MP grease to the oil seal lip.

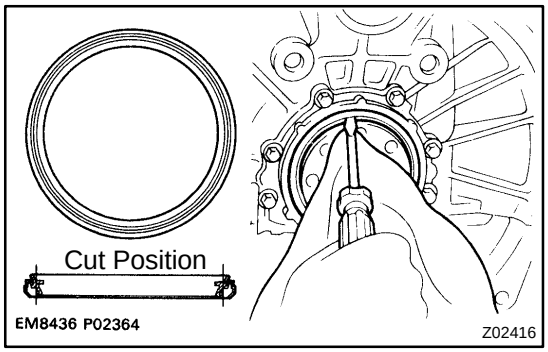

(b) If rear oil seal retainer is installed on cylinder block:
(1) Using a knife, cut off the oil seal lip.
(2) Using a screwdriver, pry out the oil seal.

NOTICE:
Be careful not to damage the crankshaft. Tape the screwdriver tip.

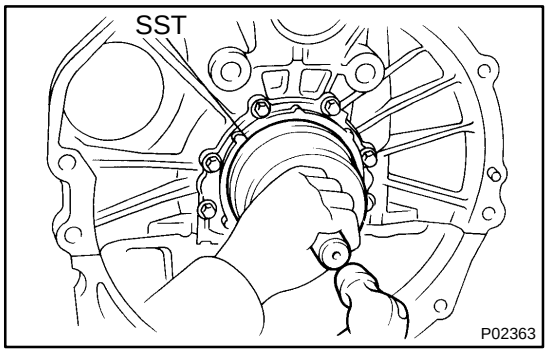

(3) Apply MP grease to a new oil seal lip.
(4) Using SST and a hammer, tap in the oil seal until its surface is flush with the rear oil seal retainer edge.
SST 09223-15030, 09950-70010 (09951-07100)

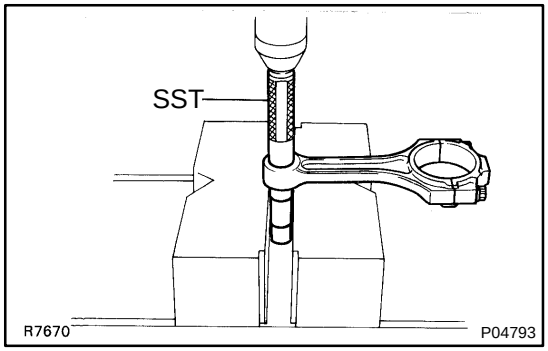

3. REPLACE CONNECTING ROD BUSHING

(a) Using SST and a press, press out the bushing.
SST 09222-30010

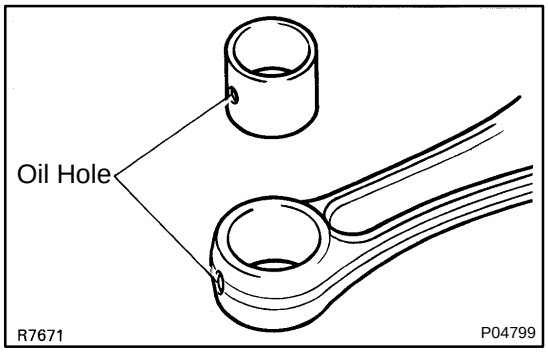

(b) Align the oil holes of a new bushing and the connecting rod.
(c) Using SST and a press, press in the bushing.
SST 09222-30010

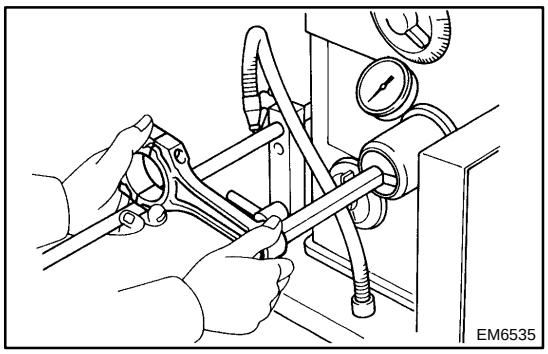

(d) Using a pin hole grinder, bore the bushing to obtain the standard specified clearance (See page EM-79) between the bushing and piston pin.

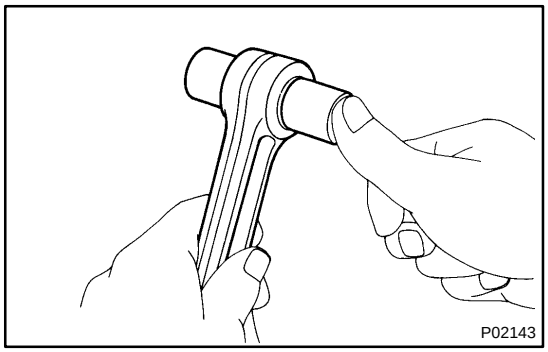

(e) Check the piston pin fit at room temperature.
Coat the piston pin with engine oil and push it into the connecting rod with your thumb.

EM1DZ-01

REASSEMBLY

HINT:

- Thoroughly clean all parts to be assembled.
- Before installing the parts, apply fresh engine oil to all sliding and rotating surfaces.
- Replace all gaskets, O-rings and oil seals with new parts.

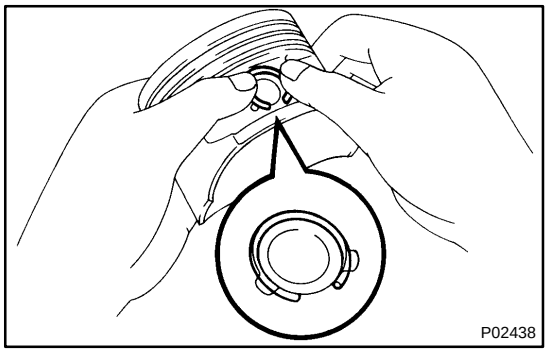

1. ASSEMBLE PISTON AND CONNECTING ROD

(a) Install a new snap ring at one end of the piston pin hole.

HINT:

Be sure that end gap of the snap ring is not aligned with the pin hole cutout portion of the piston.

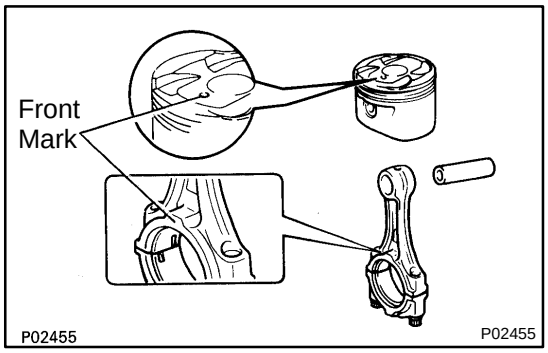

(b) Gradually heat the piston to about 80˚C (176˚F).

(c) Coat the piston pin with engine oil.

(d) Align the front marks of the piston and connecting rod, and push in the piston pin with your thumb.

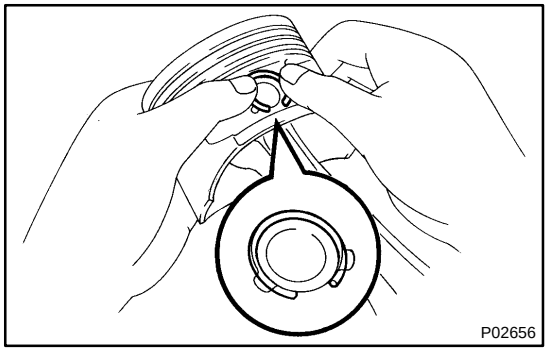

(e) Install a new snap ring at the other end of the piston pin hole.

HINT:

Be sure that end gap of the snap ring is not aligned with the pin hole cutout portion of the piston.

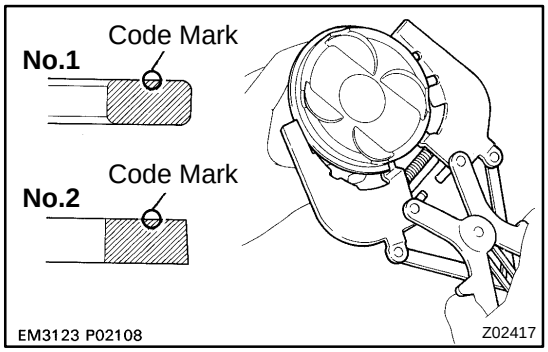

2. INSTALL PISTON RINGS

(a) Install the oil ring expander and 2 side rails by hand.

(b) Using a piston ring expander, install the 2 compression rings with the code mark facing up.

Code mark:

No.1 2T

No.2 2N

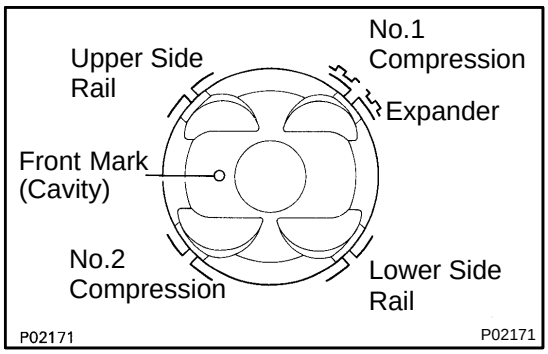

(c) Position the piston rings so that the ring ends are as shown.

NOTICE:

Do not align the piston ring ends.

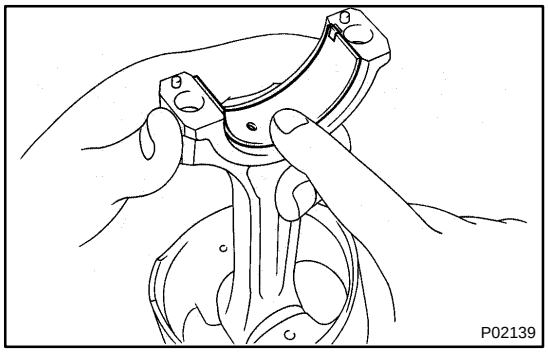

3. INSTALL BEARINGS

(a) Align the bearing claw with the groove of the connecting rod and connecting cap.

(b) Install the bearings in the connecting rod and connecting rod cap.

NOTICE:

Apply a generous amount of oil on the sliding surface of the bearing, and not on the back of it or on the surface to which it is installed.

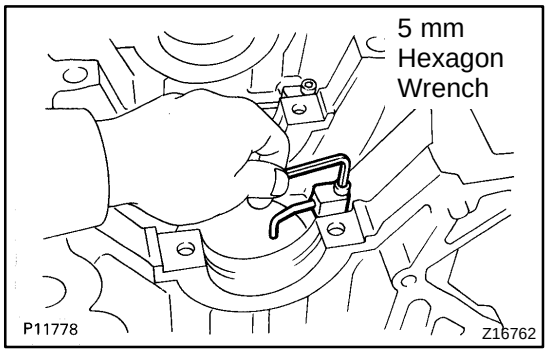

4. INSTALL OIL NOZZLES (WITH RELIEF VALVES)

Using a 5 mm hexagon wrench, install the oil nozzle with the bolt. Install the 6 oil nozzles.

Torque: 8.8 N·m (90 kgf·cm, 78 in.·lbf)

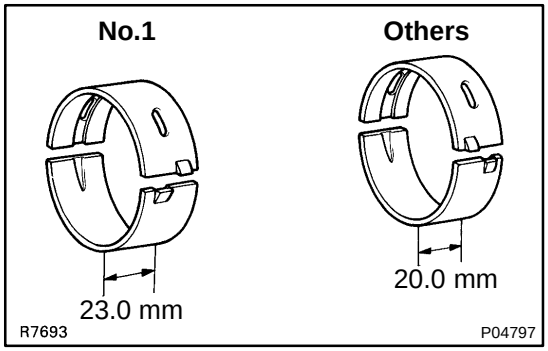

5. INSTALL MAIN BEARINGS

HINT:

- Main bearings come in widths of 20.0 mm (0.787 in.) and 23.0 mm (0.906 in.). Install the 23.0 mm bearings in the No.1 cylinder block journal position with the main bearing cap. Install the 20.0 mm bearings in the other positions.
- Upper bearings have an oil groove and oil holes; lower bearings do not.

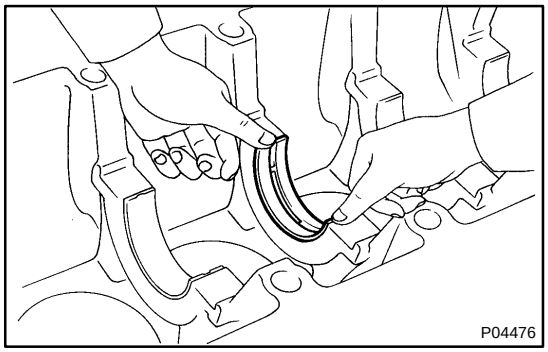

(a) Align the bearing claw with the claw groove of the main bearing cap or cylinder block.

NOTICE:

Install the bearing with the oil hole in the cylinder block.

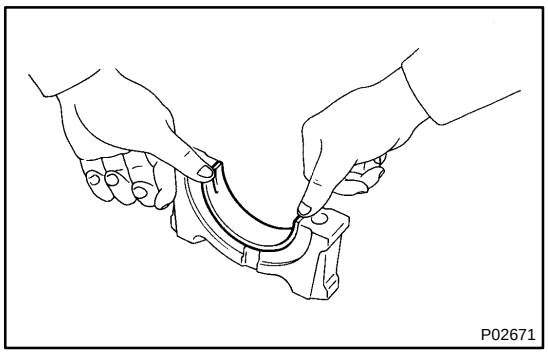

(b) Install the bearings in the cylinder block and main bearing caps.

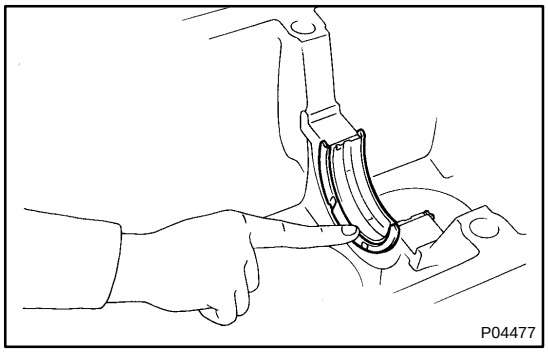

6. INSTALL UPPER THRUST WASHERS

Install the 2 thrust washers under the No.4 main journal position of the cylinder block with the oil grooves facing outward.

7. PLACE CRANKSHAFT ON CYLINDER BLOCK

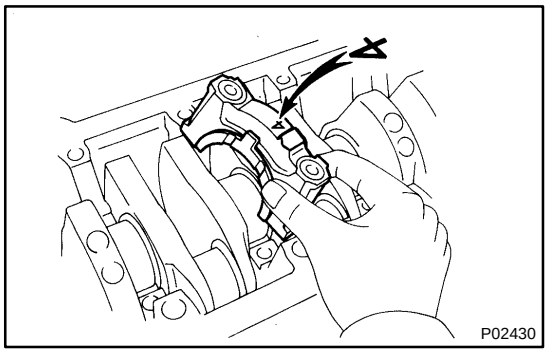

8. PLACE MAIN BEARING CAP AND LOWER THRUST WASHERS ON CYLINDER BLOCK

(a) Install the lower thrust washers on the No.4 main bearing with the grooves facing outward.

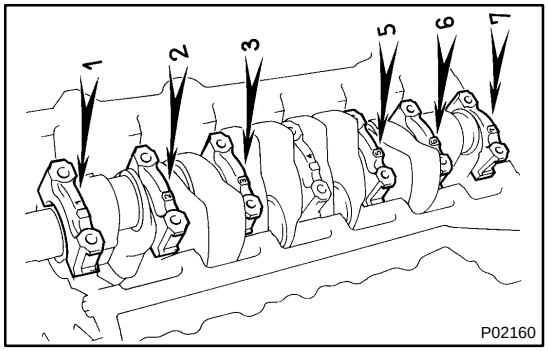

(b) Install the main bearing caps in numerical order with the arrows facing forward.

9. INSTALL MAIN BEARING CAP BOLTS

HINT:

- The main bearing cap bolts are tightened in 2 progressive steps (steps (b) and (d)).
- If any of the main bearing bolts break or deform, replace them.

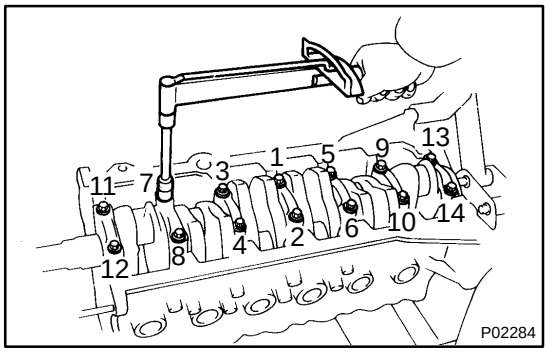

(a) Apply a light coat of engine oil on the threads and under the heads of the main bearing cap bolts.

(b) Install and uniformly tighten the 14 main bearing cap bolts, in several passes, in the sequence shown.

Torque: 44 N·m (450 kgf·cm, 33 ft·lbf)

If any one of the main bearing cap bolts does not meet the torque specification, replace the main bearing cap bolt.

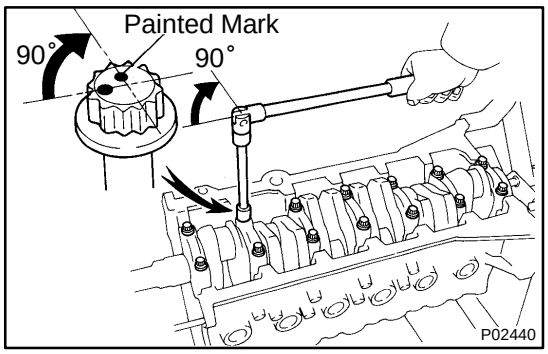

(c) Mark the front of the main bearing cap bolt head with paint.

(d) Retighten the main bearing cap bolts 90° in the numerical order shown above.

(e) Check that the painted mark is now at a 90° angle to the front.

(f) Check that the crankshaft turns smoothly.

10. CHECK CRANKSHAFT THRUST CLEARANCE
(See page EM-71)

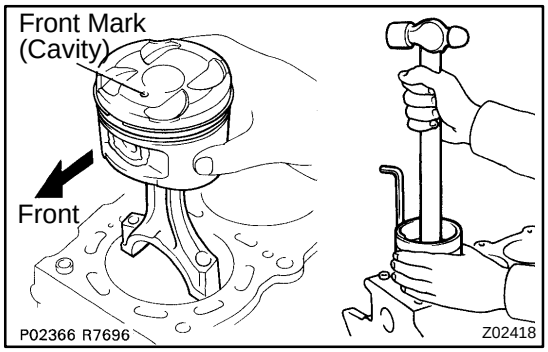

11. INSTALL PISTON AND CONNECTING ROD ASSEMBLIES

Using a piston ring compressor, push the correctly numbered piston and connecting rod assemblies into each cylinder with the front mark of the piston facing forward.

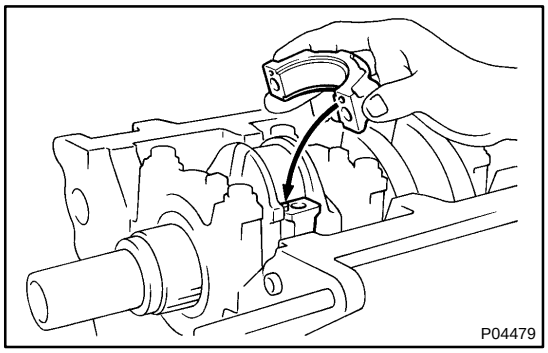

12. PLACE CONNECTING ROD CAP ON CONNECTING ROD

(a) Match the numbered connecting rod cap with the connecting rod.

(b) Install the connecting rod cap with by aligning the dowel pin to the corresponding hole.

13. INSTALL CONNECTING ROD CAP BOLTS

HINT:

- The connecting rod cap bolts are tightened in 2 progressive steps (steps (b) and (d)).
- If any of the connecting rod bolts break or deform, replace them.

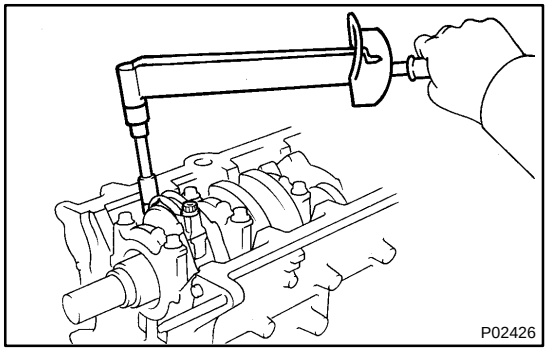

(a) Apply a light coat of engine oil on the threads and under the heads of the connecting rod cap bolts.

(b) At first, install and alternately tighten the bolts of the connecting rod cap in several passes.
Torque: 29 N·m (300 kgf·cm, 22 ft·lbf)

If any one of the connecting rod cap bolts does not meet the torque specification, replace the cap bolt.

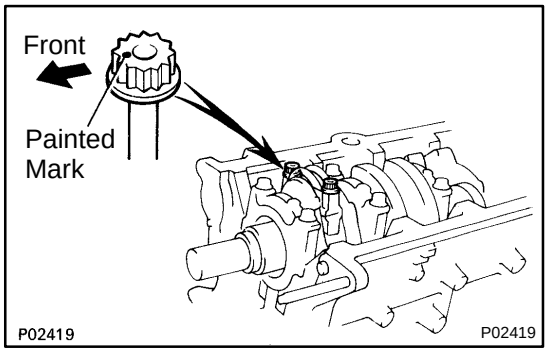

(c) Mark the front of the connecting rod cap bolt with paint.

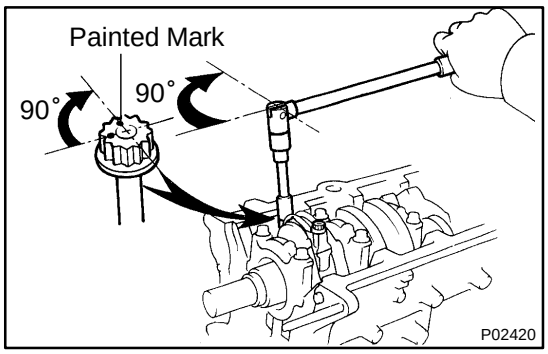

(d) Retighten the connecting rod cap bolts 90° in the numerical order shown.

(e) Check that the painted mark is now at a 90° angle to the front.

(f) Check that the crankshaft turns smoothly.

14. CHECK CONNECTING ROD THRUST CLEARANCE (See page EM-79)

15. INSTALL REAR OIL SEAL RETAINER

(a) Remove any old packing (FIPG) material and be careful not to drop any oil on the contact surfaces of the retainer and cylinder block.

- Using a razor blade and gasket scraper, remove all the old packing (FIPG) material from the gasket surfaces and sealing groove.
- Thoroughly clean all components to remove all debris.
- Using a non-residue solvent, clean both sealing surfaces.

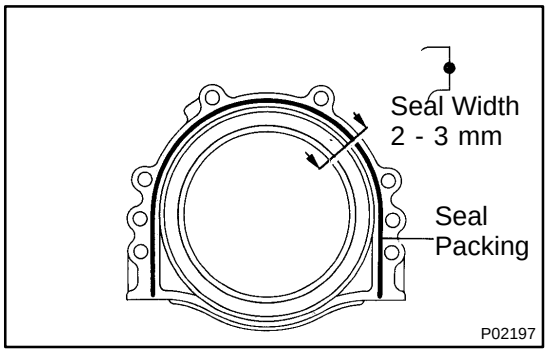

(b) Apply seal packing to the retainer as shown in the illustration.

Seal packing:
Part No. 08826-00080 or equivalent

- Install a nozzle that has been cut to a 2 - 3 mm (0.08 - 0.12 in.) opening.
- Parts must be assembled within 3 minutes of application. Otherwise the material must be removed and reapplied.
- Immediately remove nozzle from the tube and reinstall cap.

(c) Install the retainer with the 6 bolts.
Torque: 6.0 N·m (60 kgf·cm, 53 in.·lbf)

16. INSTALL OIL PUMP (See page LU-16)

17. INSTALL WATER PUMP (See page CO-1 1)

18. INSTALL CRANKSHAFT POSITION SENSOR
Torque: 9.0 N·m (90 kgf·cm, 80 in.·lbf)

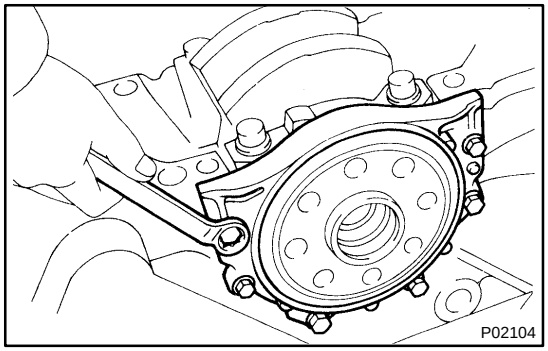

19. INSTALL RH ENGINE MOUNTING BRACKET AND INSULATOR ASSEMBLY
Torque: 59 N·m (590 kgf·cm, 44 ft·lbf)

20. INSTALL ENGINE COOLANT DRAIN PLUG
Torque: 30 N·m (300 kgf·cm, 22 ft·lbf)

21. INSTALL UNION FOR OIL COOLER HOSE

(a) Apply adhesive to 2 or 3 threads of the union.
Adhesive:
Part No. 08833-00070, THREE BOND 1324, or equivalent

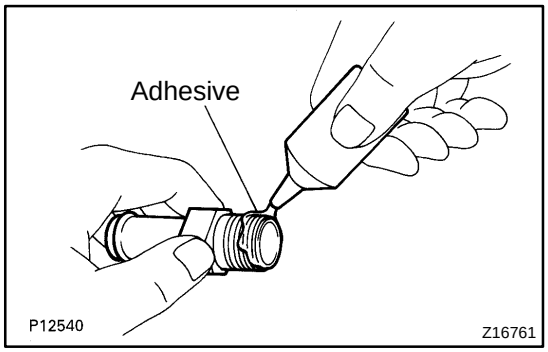

(b) Install the union.
Torque: 40 N·m (400 kgf·cm, 30 ft·lbf)

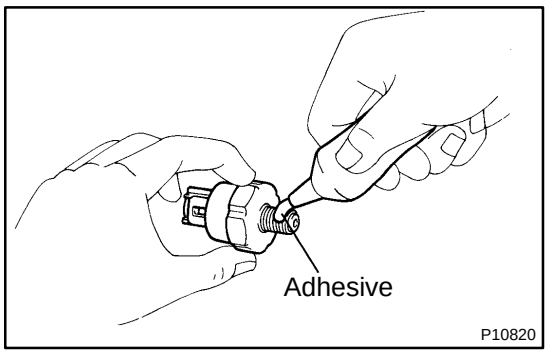

22. INSTALL OIL PRESSURE SWITCH AND KNOCK SENSORS

(a) Install the union nut with a new gasket.
SST 09816-30010
Torque: 55 N·m (550 kgf·cm, 41 ft·lbf)

(b) Apply adhesive to 2 or 3 threads of the oil pressure switch.
Adhesive:
Part No. 08833-00080, THREE BOND 1344, LOCKTITE 242 or equivalent

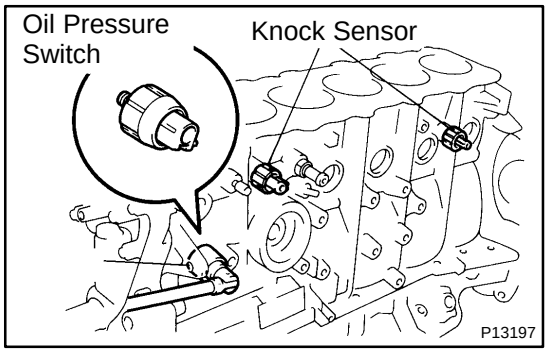

(c) Using SST, install the switch and sensors.
SST 09816-30010
Torque:
Oil pressure switch: 14 N·m (150 kgf·cm, 11 ft·lbf)
Knock sensor: 44 N·m (450 kgf·cm, 33 ft·lbf)

23. INSTALL FUEL PIPE SUPPORT
Torque: 28 N·m (290 kgf·cm, 21 ft·lbf)

24. INSTALL LH ENGINE MOUNTING BRACKET AND INSULATOR ASSEMBLY
Torque: 58 N·m (590 kgf·cm, 44 ft·lbf)

25. INSTALL OIL FILTER BRACKET

(a) Check and clean the oil filter bracket installation.
(b) Place a new O-ring in position on the oil filter bracket.
(c) Apply clean engine oil to the O-ring.
(d) Install a new gasket to the union bolt.
(e) Install the oil filter bracket with the union bolt.
Torque: 90 N·m (900 kgf·cm, 66 ft·lbf)

26. INSTALL NO.2 WATER BYPASS PIPE WITH HOSE

(a) Install a new gasket to the water pump.
(b) Install the water bypass pipe with the 2 bolts and 2 nuts.
Torque: 21 N·m (210 kgf·cm, 15 ft·lbf)

27. INSTALL OIL COOLER (See page LU-22)

28. INSTALL CYLINDER HEAD (See page EM-47)

29. INSTALL TIMING PULLEYS AND BELT (See page EM-21)

30. INSTALL GENERATOR (See page CH-18)

31. REMOVE ENGINE STAND FROM ENGINE

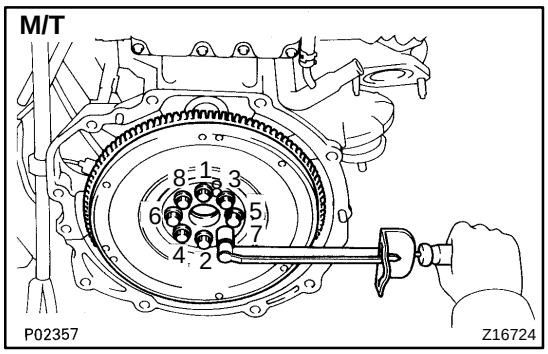

32. M/T:
INSTALL FLYWHEEL

HINT:
The flywheel bolts are tightened in 2 progressive step, (b) and (d).

(a) Install the flywheel on the crankshaft.

(b) Install and uniformly tighten the 8 bolts, in several passes, in the sequence shown.
Torque: 49 N·m (500 kgf·cm, 36 ft·lbf)

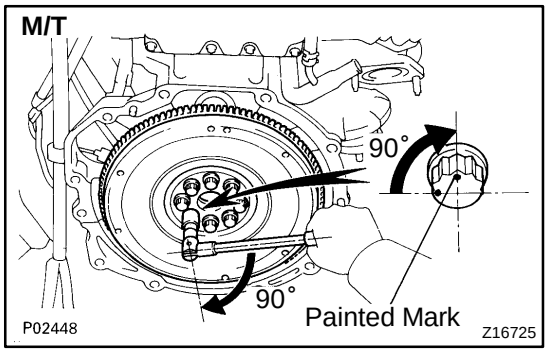

(c) Mark the flywheel bolt with paint.

(d) Retighten the flywheel bolts by an additional 90˚.

(e) Check that the painted mark is now at a 90˚ angle to (d).

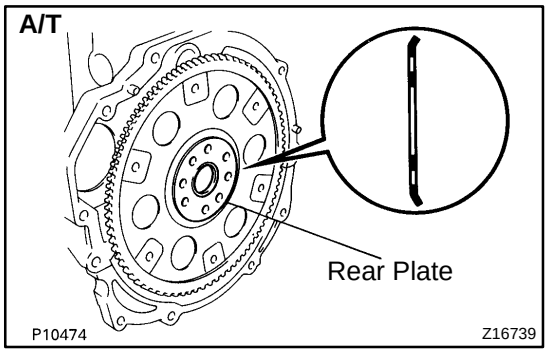

33. A/T:
INSTALL DRIVE PLATE

(a) Install the front spacer, drive plate and rear plate on the crankshaft.

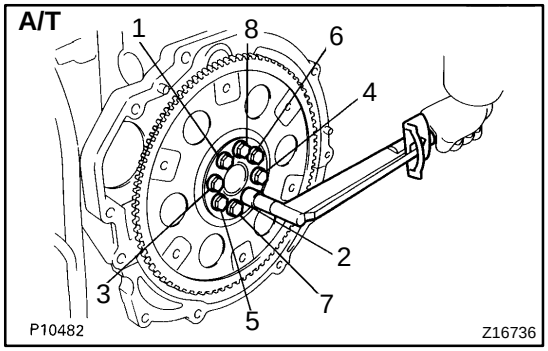

(b) Apply adhesive to 2 or 3 threads of the mounting bolt end.
Adhesive:
Part No. 08833-00070, THREE BOND 1324 or equivalent

(c) Install and uniformly tighten the 8 bolts, in several passes, in the sequence shown.
Torque: 83 N·m (850 kgf·cm, 61 ft·lbf)

EXHAUST SYSTEM

EM0AS-02

COMPONENTS

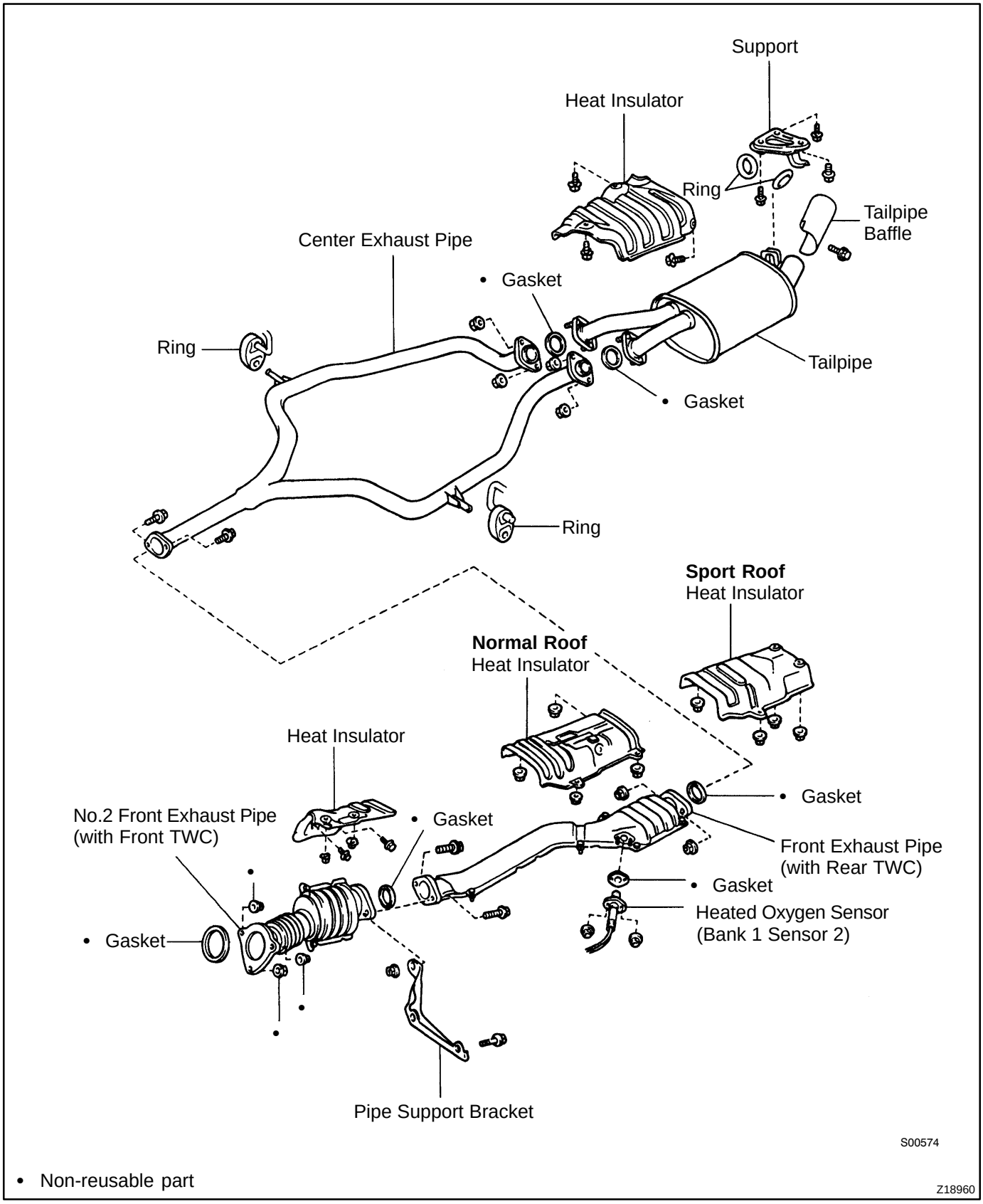

PP0QF-01

EQUIPMENT

OBDII scan tool	Engine speed
Caliper gauge	
CO/HC meter	
Compression gauge	
Connecting rod aligner	
Cylinder gauge	
Dial indicator	
Dye penetrant	
Engine tune-up tester	
Heater	
Micrometer	
Mirror	
Magnetic finger	
Piston ring compressor	
Piston ring expander	
Plastigage	
Precision straight edge	
Spring tester	Valve spring
Steel square	Valve spring
Thermometer	
Torque wrench	
Valve seat cutter	
Vernier calipers	
V-block	

CO/HC

EM0A7-02

INSPECTION

HINT:
This check is used only to determine whether or not the idle CO/HC complies with regulations.

1. INITIAL CONDITIONS

(a) Engine at normal operating temperature
(b) Air cleaner installed
(c) All pipes and hoses of air induction system connected
(d) All accessories switched OFF
(e) All vacuum lines properly connected

HINT:
All vacuum hoses for EGR system, etc. should be properly connected.

(f) SFI system wiring connectors fully plugged
(g) Ignition timing checked correctly
(h) Transmission in neutral position
(i) Tachometer and CO/HC meter calibrated by hand

2. START ENGINE

3. RACE ENGINE AT 2,500 RPM FOR APPROX. 180 SECONDS

4. INSERT CO/HC METER TESTING PROBE AT LEAST 40 cm (1.3 ft) INTO TAILPIPE DURING IDLING

5. IMMEDIATELY CHECK CO/HC CONCENTRATION AT IDLE AND/OR 2,500 RPM

HINT:
When performing the 2 mode (2,500 rpm and idle) test, follow the measurement order prescribed by the applicable local regulations.

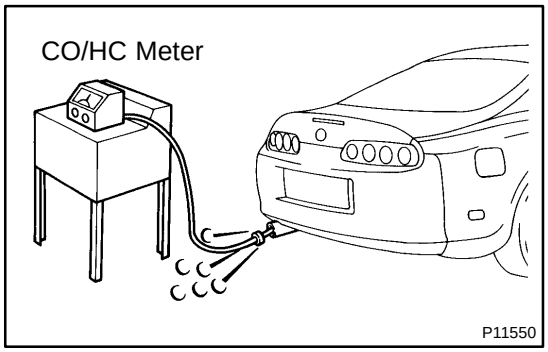

If the CO/HC concentration does not comply with regulations, troubleshoot in the order given below.

(1) Check heated oxygen sensors operation.
(See page SF-82)

(2) See the table below for possible causes, and then inspect and correct the applicable causes if necessary.

CO	HC	Phenomenon	Causes
Normal	High	Rough idle	1. Faulty ignitions: • Incorrect timing • Fouled, shorted or improperly gapped plugs 2. Incorrect valve clearance 3. Leaky EGR valve 4.Leaky intake and exhaust valves 5.Leaky cylinder
Low	High	Rough idle (Fluctuating HC reading)	1. Vacuum leaks: • PCV hose • EGR valve • Intake manifold • Air intake chamber • Throttle body • IAC valve • Brake booster line 2. Lean mixture causing misfire
High	High	Rough idle (Black smoke from exhaust)	1. Restricted air filter: 2. Faulty SFI system: • Faulty fuel pressure regulator • Clogged fuel return line • Defective ECT sensor • Defective turbo pressure sensor • Faulty ECM • Faulty injector • Faulty throttle position sensor • Faulty MAF meter

COMPRESSION

EM0A8-02

INSPECTION

HINT:

If there is lack of power, excessive oil consumption or poor fuel economy, measure the compression pressure.

1. WARM UP AND STOP ENGINE

Allow the engine to warm up to normal operating temperature.

2. DISCONNECT CAMSHAFT POSITION SENSOR CONNECTORS

3. REMOVE IGNITION COILS ASSEMBLIES

(See page IG-6)

4. REMOVE SPARK PLUGS

5. CHECK CYLINDER COMPRESSION

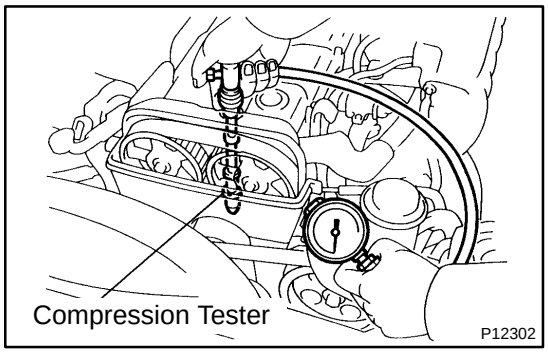

(a) Insert a compression tester into the spark plug hole.

(b) While cranking the engine, measure the compression pressure.

HINT:

Always use a fully charged battery to obtain engine revolutions of 250 rpm or more.

(c) Repeat steps (a) through (b) for each cylinder.

NOTICE:

This measurement must be done in as short a time as possible.

Standard pressure:
1,079 kPa (11.0 kgf/cm^2, 156 psi) or more
Minimum pressure:
883 kPa (9.0 kgf/cm^2, 128 psi)
Difference between each cylinder:
98 kPa (1.0 kgf/cm^2, 14 psi) or less

(d) If the cylinder compression in 1 or more cylinders is low, pour a small amount of engine oil into the cylinder through the spark plug hole and repeat steps (a) through (b) for the cylinder with low compression.

- If adding oil helps the compression, it is likely that the piston rings and/or cylinder bore are probably worn or damaged.
- If pressure stays low, a valve may be sticking or seating improper, or there may be leakage past the gasket.

6. REINSTALL SPARK PLUGS

7. REINSTALL IGNITION COILS ASSEMBLIES

(See page IG-7)

8. RECONNECT CAMSHAFT POSITION SENSOR CONNECTORS

IDLE SPEED

EM0AB-01

INSPECTION

1. INITIAL CONDITIONS

(a) Engine at normal operating temperature
(b) Air cleaner installed
(c) All pipes and hoses of air induction system connected
(d) All accessories switched OFF
(e) All vacuum lines properly connected

HINT:
All vacuum hoses for EGR system, etc. should be properly connected.

(f) SFI system wiring connectors fully plugged
(g) Ignition timing checked correctly
(h) Transmission in neutral position

2. CONNECT TOYOTA HAND-HELD TESTER OR OBDII SCAN TOO (See page EM-1 1)

3. INSPECT IDLE SPEED

(a) Race the engine speed at 2,500 rpm for approx. 90 seconds.
(b) Check the idle speed.
Idle speed: 650 ± 50 rpm

If the idle speed is not as specified, check the IAC valve.

4. DISCONNECT TOYOTA HAND-HELD TESTER OR OBDII SCAN TOOL

IGNITION TIMING

EM0AA-02

INSPECTION

1. WARM UP ENGINE

Allow the engine to warm up to normal operating temperature.

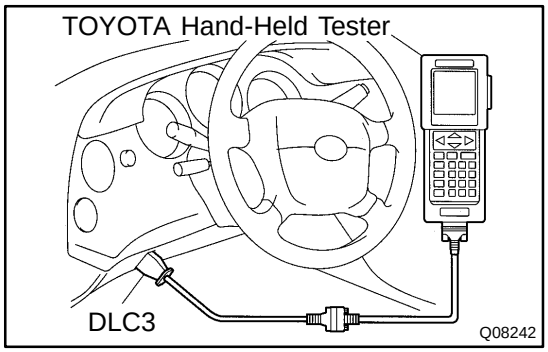

2. CONNECT TOYOTA HAND-HELD TESTER OR OBDII SCAN TOOL

(a) Connect the TOYOTA hand-held tester or OBDII scan tool to the DLC3.

(b) Please refer to the TOYOTA hand-held tester or OBDII scan tool operator's manual for further details.

3. CONNECT TIMING LIGHT TO ENGINE

4. CHECK IDLE SPEED

(a) Race the engine speed at 2,500 rpm for approx. 90 seconds.

(b) Check the idle speed.
Idle speed: 650 ± 50 rpm

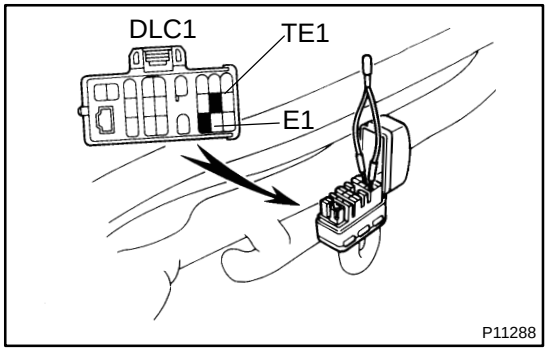

5. INSPECT IGNITION TIMING

(a) Using SST, connect terminals TE1 and E1 of the DLC1.
SST 09843-18020

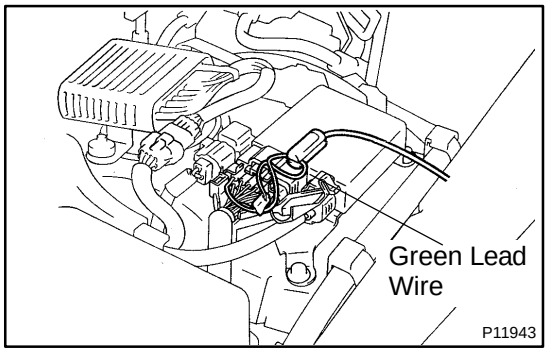

(b) Open the igniter connector cover and remove the green lead wire.

(c) Connect the timing light clip to the green lead wire.

NOTICE:

- **Use a timing light that can detect the primary signal.**
- **After finishing the inspection, make sure the lead wire is stored inside the connector cover.**

(d) Using a timing light, check the ignition timing.
Ignition timing: 10 ± 2° BTDC @ idle
(Transmission in neutral position)

(e) Remove the SST from the DLC1.
SST 09843-18020

6. FURTHER CHECK IGNITION TIMING
Ignition timing: 10 - 20˚ BTDC @ idle
(Transmission in neutral position)

HINT:
The timing mark moves in a range between 10˚ and 20˚.

7. DISCONNECT TIMING LIGHT FROM ENGINE

8. DISCONNECT TOYOTA HAND- HELD TESTER OR OBDII SCAN TOOL

EM0AE-02

INSPECTION

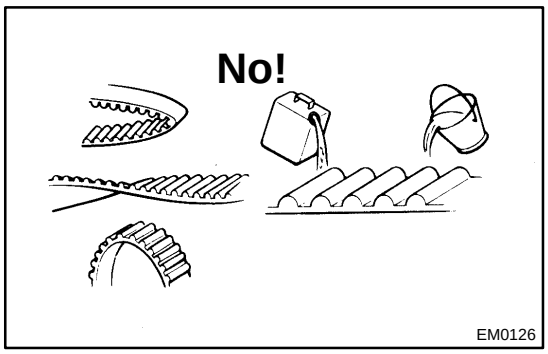

1. INSPECT TIMING BELT

NOTICE:

- **Do not bend, twist or turn the timing belt inside out.**
- **Do not allow the timing belt to come into contact with oil, water or steam.**
- **Do not utilize timing belt tension when installing or removing the mount bolt of the camshaft timing pulley.**

If there are any defects, as shown in the illustrations, check the following points.

(a) Premature parting
- Check for proper installation.
- Check the timing cover gasket for damage and proper installation.

(b) If the belt teeth are cracked or damaged, check to see if either camshaft is locked.

(c) If there is noticeable wear or cracks on the belt face, check to see if there are nicks on the side of the idler pulley lock.

(d) If there is wear or damage on only one side of the belt, check the belt guide and the alignment of each pulley.

(e) If there is noticeable wear on the belt teeth, check timing cover for damage and check gasket has been installed correctly and for foreign material on the pulley teeth.

If necessary, replace the timing belt.

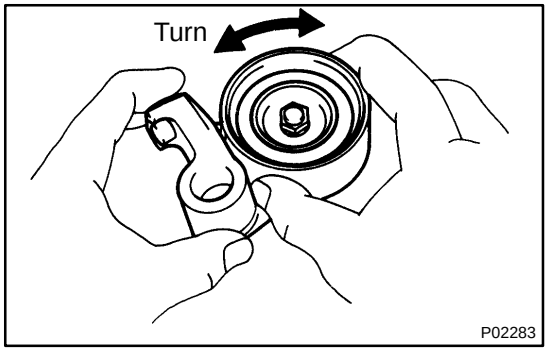

2. INSPECT IDLER PULLEY

(a) Check the turning smoothness of the idler pulley.

If necessary, replace the idler pulley.

(b) Check the turning smoothness of the tensioner.

If necessary, replace the tensioner.

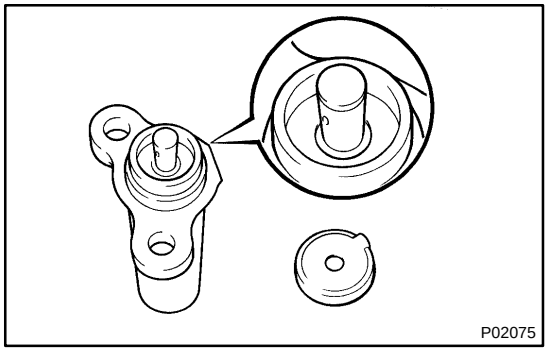

3. INSPECT TIMING BELT TENSIONER

(a) Visually check tensioner for oil leakage.

HINT:

If there is only the faintest trace of oil on the seal on the push rod side, the tensioner is all right.

If leakage is found, replace tensioner.

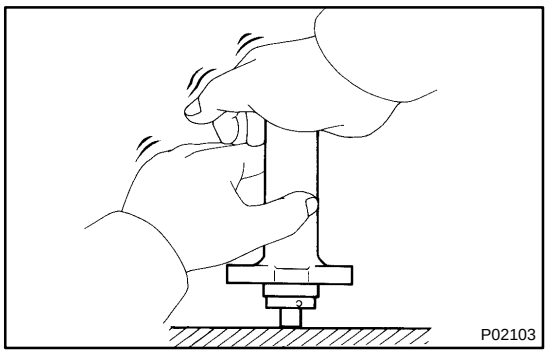

(b) Hold the tensioner with both hands and push the push rod strongly against the floor or wall to check that it doesn't move.

If the push rod moves, replace the tensioner.

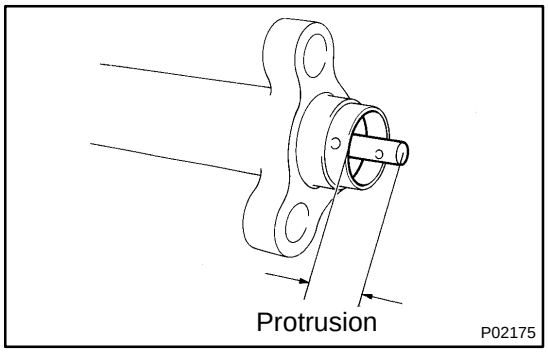

(c) Measure the protrusion of the push rod from the housing end.

Protrusion: 8.0 - 8.8 mm (0.315 - 0.346 in.)

If the protrusion is not as specified, replace the tensioner.

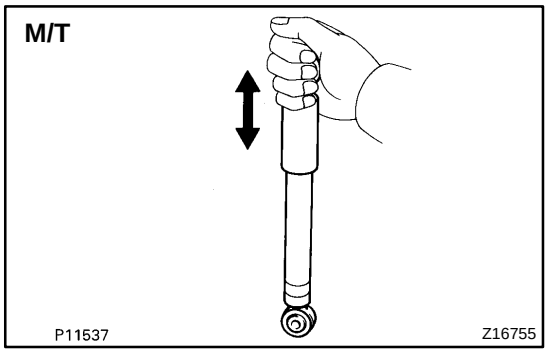

4. M/T:

INSPECT DRIVE BELT TENSION DAMPER

Compress and extend the tension damper rod and check that there is no abnormal resistance or unusual operation sounds. If there is any abnormality, replace the tension damper with a new one.

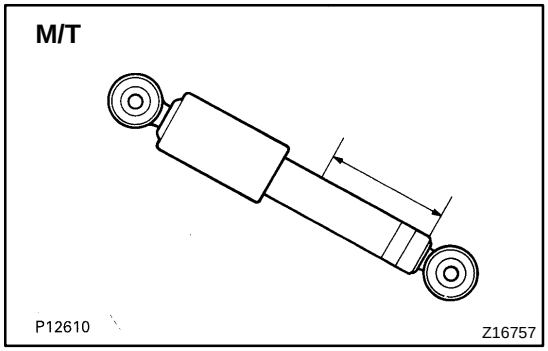

NOTICE:

When discarding the tension damper, use the following procedure.

- **Fully extend the damper rod.**
- **Using a drill, make a hole in the cylinder as shown to release the gas inside.**

CAUTION:

The gas coming out is harmless, but be careful of the chips which may fly up when drilling.

VALVE CLEARANCE

EM0A9-02

INSPECTION

HINT:

Inspect and adjust the valve clearance when the engine is cold.

1. REMOVE IGNITION COILS ASSEMBLIES
(See page IG-6)

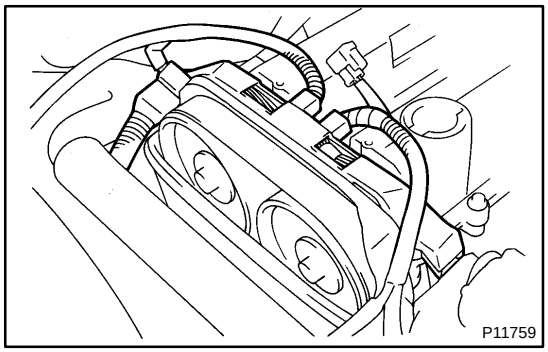

2. DISCONNECT ENGINE WIRE PROTECTOR FROM NO.4 TIMING BELT COVER

(a) Disconnect the engine wire from the 4 wire clamps.

(b) Lift out the engine wire protector from the cylinder head covers.

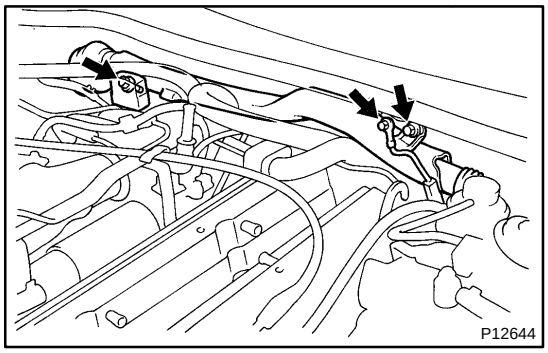

3. DISCONNECT ENGINE WIRE PROTECTOR FROM COWL TOP PANEL

(a) Remove the bolt, and disconnect the ground strap.

(b) Remove the 2 bolts, and lift up the engine wire protector.

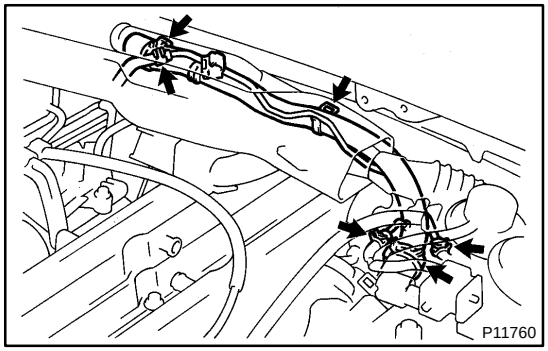

4. REMOVE IAC VALVE PIPE

(a) Disconnect the 5 air hoses from the IAC valve pipe.

(b) Remove the IAC valve pipe from the pipe clamp on the No.1 cylinder head cover.

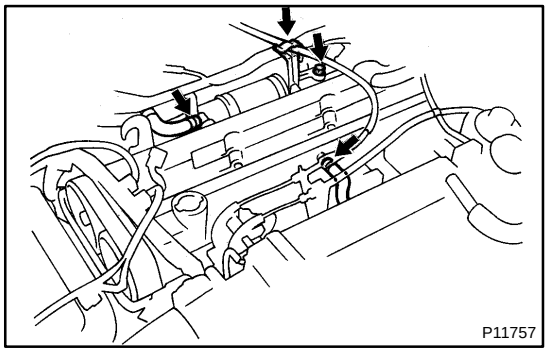

5. REMOVE NO.1 AND NO.2 CYLINDER HEAD COVERS

(a) Disconnect the cruise control actuator cable from the cable bracket.

(b) Remove the bolt holding the VSV to the turbo outlet duct.

(c) Disconnect the 2 PCV hoses from the cylinder head covers.

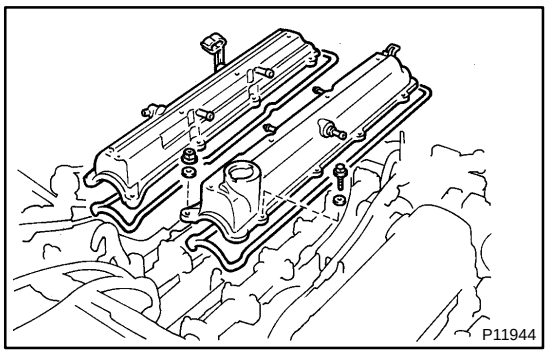

(d) Remove the 6 bolts, 2 nuts, 8 seal washers, No.1 cylinder head cover and gasket.

(e) Remove the 6 bolts, 2 nuts, 8 seal washers, No.2 cylinder head cover and gasket.

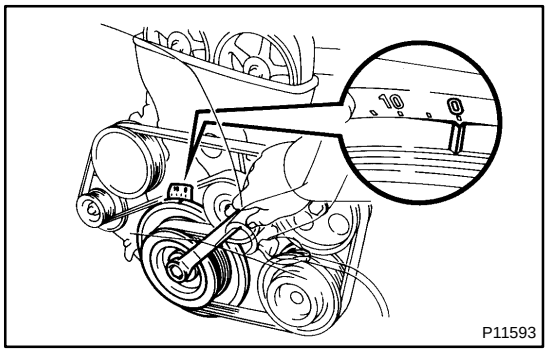

6. SET NO.1 CYLINDER TO TDC/COMPRESSIO

(a) Turn the crankshaft pulley, and align its groove with timing mark ”0” of the No.1 timing belt cover.

NOTICE:

Always turn the crankshaft clockwise.

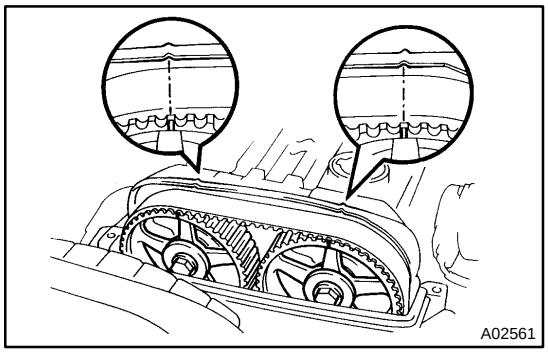

(b) Check that the timing marks of the camshaft timing pulleys are aligned with the timing marks of the No.4 timing belt cover.

If not, turn the crankshaft 1 revolution (360˚).

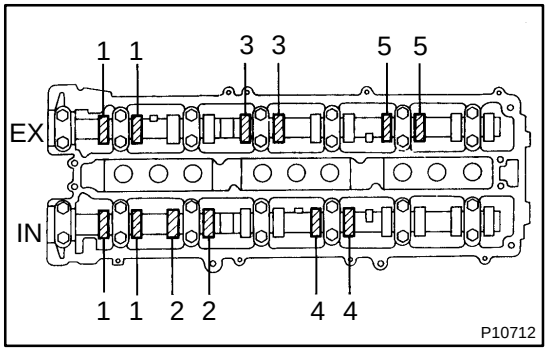

7. INSPECT VALVE CLEARANCE

(a) Check only those valves indicated in the illustration.

- Using a feeler gauge, measure the clearance between the valve lifter and camshaft.
- Record the valve clearance measurements of those that are out of specification. They will be used later to determine the required replacement adjusting shim.

Valve clearance (Cold):
Intake 0.15 - 0.25 mm (0.006 - 0.010 in.)
Exhaust 0.25 - 0.35 mm (0.010 - 0.014 in.)

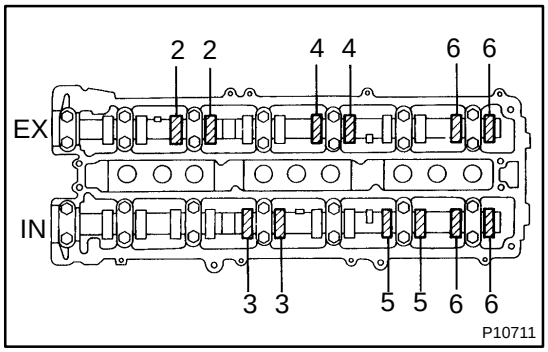

(b) Turn the crankshaft pulley 1 revolution (360˚), and align the groove with timing mark ”0” of the No.1 timing belt cover.

(c) Check only the valves indicated as shown. Measure the valve clearance. (See procedure in step (a))

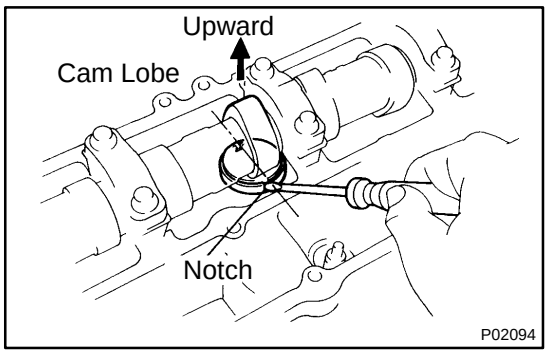

8. ADJUST VALVE CLEARANCE

(a) Remove the adjusting shim.

- Turn the camshaft so that the cam lobe for the valve to be adjusted faces up.
- Turn the valve lifter with a screwdriver so that the notches are perpendicular to the camshaft.

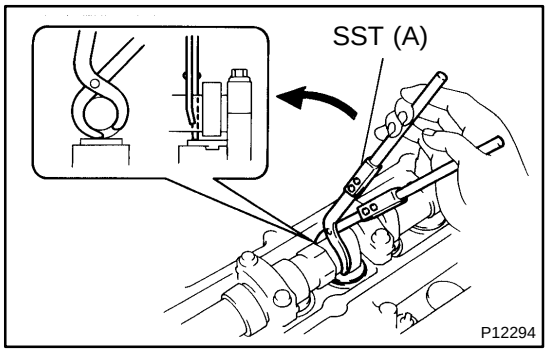

- Using SST (A), hold the camshaft as shown in the illustration.

SST 09248-55040 (09248-05410)

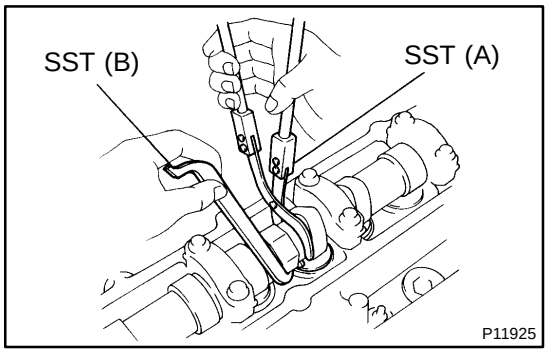

- Using SST (A), press down the valve lifter and place SST (B) between the camshaft and valve lifter. Remove SST (A).

SST 09248-55040 (09248-05410, 09248-05420)

HINT:

- Apply SST (B) at slight angle on the side marked with ”7”, at the position shown in the illustration

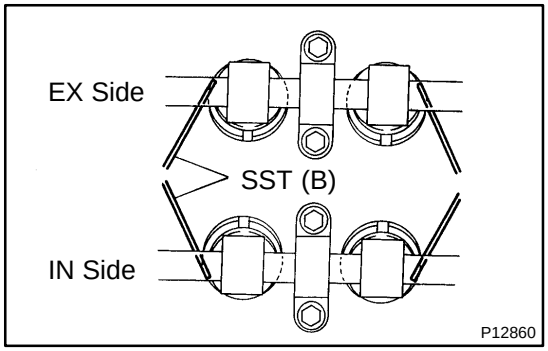

- Insert SST (B) gently from the inside as shown in the illustration.

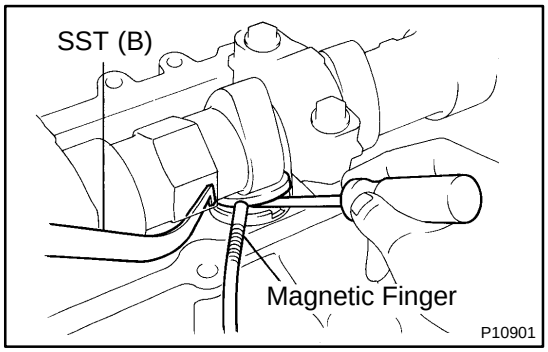

- Using a small screwdriver and a magnetic finger, remove the adjusting shim.

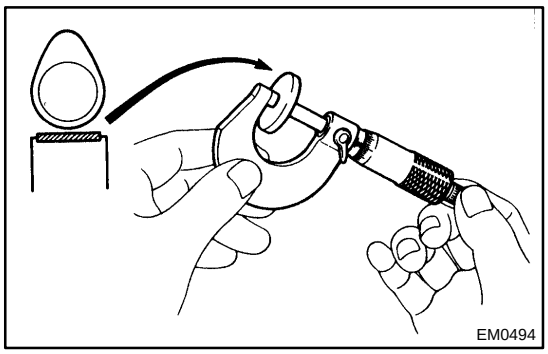

(b) Determine the replacement adjusting shim size according to the following Formula or Charts:
- Using a micrometer, measure the thickness of the removed shim.
- Calculate the thickness of a new shim so the valve clearance comes within specified value.

T ..... Thickness of used shim
A ..... Measured valve clearance
N ..... Thickness of new shim

Intake
N = T + (A - 0.20 mm (0.008 in.))
Exhaust
N = T + (A - 0.30 mm (0.012 in.))

- Select a new shim with a thickness as close as possible to the calculated values.

HINT:
Shims are available in 17 sizes in increments of 0.050 mm (0.0020 in.), from 2.500 mm (0.0984 in.) to 3.300 mm (0.1299 in.).

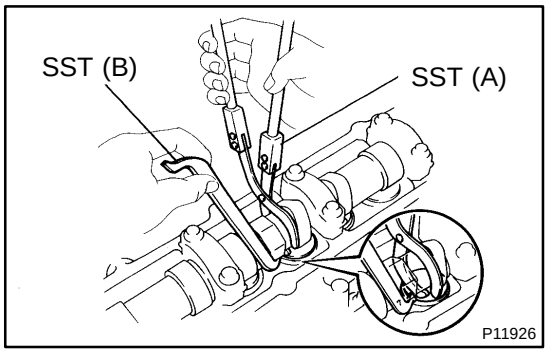

(c) Install a new adjusting shim.
- Place a new adjusting shim on the valve lifter, with imprinted numbers facing down.
- Press down the valve lifter with SST (A), and remove SST (B).

SST 09248-55040

(d) Recheck the valve clearance.

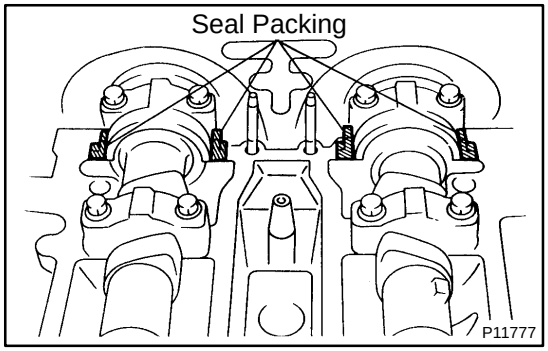

9. REINSTALL NO.1 AND NO.2 CYLINDER HEAD COVERS

(a) Remove any old packing (FIPG) material.
(b) Apply seal packing to the cylinder head as shown in the illustration.
Seal packing:
Part No. 08826-00080 or equivalent
(c) Install the gaskets to the No.1 and No.2 cylinder head covers.
(d) Install the 12 seal washers to the bolts.
(e) Install the No.2 cylinder head cover with the 6 bolts, 4 seal washers and 4 nuts..
Torque: 5.4 N·m (55 kgf·cm, 48 in.·lbf)
(f) Install the No.1 cylinder head cover with the 6 bolts, 4 seal washers and 4 nuts..
Torque: 5.4 N·m (55 kgf·cm, 48 in.·lbf)
(g) Connect the 2 PCV hoses to the cylinder head covers.
(h) Install the bolt holding the VSV to the turbo outlet duct.
(i) Connect the cruise control actuator cable to the cable bracket.

10. **RECONNECT ENGINE WIRE PROTECTOR TO NO.4 TIMING BELT COVER**
11. **REINSTALL IAC VALVE PIPE**
12. **RECONNECT ENGINE WIRE PROTECTOR TO COWL TOP PANEL**
13. **REINSTALL IGNITION COILS ASSEMBLIES**
    (See page IG-7)

Adjusting Shim Selection Chart (Intake)

Measured clearance mm (in.) \ Installed shim thickness mm (in.)	2.500 (0.0984)	2.520 (0.0992)	2.540 (0.1000)	2.550 (0.1004)	2.560 (0.1008)	2.580 (0.1016)	2.600 (0.1024)	2.620 (0.1031)	2.640 (0.1039)	2.650 (0.1043)	2.660 (0.1047)	2.670 (0.1051)	2.680 (0.1055)	2.690 (0.1059)	2.700 (0.1063)	2.710 (0.1067)	2.720 (0.1071)	2.730 (0.1075)	2.740 (0.1079)	2.750 (0.1083)	2.760 (0.1087)	2.770 (0.1091)	2.780 (0.1094)	2.790 (0.1098)	2.800 (0.1102)	2.810 (0.1106)	2.820 (0.1110)	2.830 (0.1114)	2.840 (0.1118)	2.850 (0.1122)	2.860 (0.1126)	2.870 (0.1130)	2.880 (0.1134)	2.890 (0.1138)	2.900 (0.1142)	2.910 (0.1146)	2.920 (0.1150)	2.930 (0.1154)	2.940 (0.1157)	2.950 (0.1161)	2.960 (0.1165)	2.970 (0.1169)	2.980 (0.1173)	2.990 (0.1177)	3.000 (0.1181)	3.010 (0.1185)	3.020 (0.1189)	3.030 (0.1193)	3.040 (0.1197)	3.050 (0.1201)	3.060 (0.1205)	3.080 (0.1213)	3.100 (0.1220)	3.120 (0.1228)	3.140 (0.1236)	3.150 (0.1240)	3.160 (0.1244)	3.180 (0.1252)	3.200 (0.1260)	3.220 (0.1268)	3.240 (0.1276)	3.250 (0.1280)	3.260 (0.1283)	3.280 (0.1291)	3.300 (0.1299)
0.000 – 0.020 (0.0000 – 0.0008)									1	1	1	1	1	1	1	1	2	2	2	2	2	3	3	3	3	3	4	4	4	4	4	5	5	5	5	5	6	6	6	6	6	7	7	7	7	7	8	8	8	8	8	9	9	10	10	10	10	11	11	12	12	12	12	13	13
0.021 – 0.040 (0.0008 – 0.0016)								1	1	1	1	1	1	1	2	2	2	2	2	3	3	3	3	3	4	4	4	4	4	5	5	5	5	5	6	6	6	6	6	7	7	7	7	7	8	8	8	8	8	9	9	9	10	10	10	11	11	11	12	12	12	13	13	13	14
0.041 – 0.060 (0.0016 – 0.0024)							1	1	1	1	1	1	2	2	2	2	2	3	3	3	3	3	4	4	4	4	4	5	5	5	5	5	6	6	6	6	6	7	7	7	7	7	8	8	8	8	8	9	9	9	9	10	10	10	11	11	11	12	12	12	13	13	13	14	14
0.061 – 0.080 (0.0024 – 0.0031)						1	1	1	1	1	2	2	2	2	2	3	3	3	3	3	4	4	4	4	4	5	5	5	5	5	6	6	6	6	6	7	7	7	7	7	8	8	8	8	8	9	9	9	9	9	10	10	10	11	11	11	12	12	12	13	13	13	14	14	14
0.081 – 0.100 (0.0032 – 0.0039)				1	1	1	1	1	2	2	2	2	2	3	3	3	3	3	4	4	4	4	4	5	5	5	5	5	6	6	6	6	6	7	7	7	7	7	8	8	8	8	8	9	9	9	9	9	10	10	10	10	11	11	12	12	12	12	13	13	14	14	14	14	15
0.101 – 0.120 (0.0040 – 0.0047)			1	1	1	1	1	2	2	2	2	3	3	3	3	3	4	4	4	4	4	5	5	5	5	5	6	6	6	6	6	7	7	7	7	7	8	8	8	8	8	9	9	9	9	9	10	10	10	10	10	11	11	12	12	12	12	13	13	14	14	14	14	15	15
0.121 – 0.140 (0.0048 – 0.0055)		1	1	1	1	1	2	2	2	3	3	3	3	3	4	4	4	4	4	5	5	5	5	5	6	6	6	6	6	7	7	7	7	7	8	8	8	8	8	9	9	9	9	9	10	10	10	10	10	11	11	11	12	12	12	13	13	13	14	14	14	15	15	15	16
0.141 – 0.149 (0.0056 – 0.0059)		1	1	1	1	2	2	2	3	3	3	3	4	4	4	4	4	5	5	5	5	5	6	6	6	6	6	7	7	7	7	7	8	8	8	8	8	9	9	9	9	9	10	10	10	10	10	11	11	11	11	12	12	12	13	13	13	14	14	14	15	15	15	16	16
0.150 – 0.250 (0.0059 – 0.0098)																																																																	
0.251 – 0.260 (0.0099 – 0.0102)	2	3	3	3	3	4	4	5	5	5	5	6	6	6	6	6	7	7	7	7	7	8	8	8	8	8	9	9	9	9	9	10	10	10	10	10	11	11	11	11	11	12	12	12	12	12	13	13	13	13	13	14	14	15	15	15	15	16	16	17	17	17	17	17	
0.261 – 0.280 (0.0103 – 0.0110)	2	3	3	3	4	4	4	5	5	5	6	6	6	6	6	7	7	7	7	7	8	8	8	8	8	9	9	9	9	9	10	10	10	10	10	11	11	11	11	11	12	12	12	12	12	13	13	13	13	13	14	14	14	15	15	15	16	16	16	17	17	17	17	17	
0.281 – 0.300 (0.0111 – 0.0118)	3	3	4	4	4	4	5	5	6	6	6	6	6	7	7	7	7	7	8	8	8	8	8	9	9	9	9	9	10	10	10	10	10	11	11	11	11	11	12	12	12	12	12	13	13	13	13	13	14	14	14	14	15	15	16	16	16	16	17	17	17	17	17		
0.301 – 0.320 (0.0119 – 0.0126)	3	4	4	4	4	5	5	6	6	6	6	7	7	7	7	7	8	8	8	8	8	9	9	9	9	9	10	10	10	10	10	11	11	11	11	11	12	12	12	12	12	13	13	13	13	13	14	14	14	14	14	15	15	16	16	16	16	17	17	17	17				
0.321 – 0.340 (0.0126 – 0.0134)	4	4	4	5	5	5	6	6	6	7	7	7	7	7	8	8	8	8	8	9	9	9	9	9	10	10	10	10	10	11	11	11	11	11	12	12	12	12	12	13	13	13	13	13	14	14	14	14	14	15	15	15	16	16	16	17	17	17	17	17					
0.341 – 0.360 (0.0134 – 0.0142)	4	4	5	5	5	6	6	6	7	7	7	7	8	8	8	8	8	9	9	9	9	9	10	10	10	10	10	11	11	11	11	11	12	12	12	12	12	13	13	13	13	13	14	14	14	14	14	15	15	15	15	16	16	16	17	17	17	17	17						
0.361 – 0.380 (0.0142 – 0.0150)	4	5	5	5	6	6	6	7	7	7	8	8	8	8	8	9	9	9	9	9	10	10	10	10	10	11	11	11	11	11	12	12	12	12	12	13	13	13	13	13	14	14	14	14	14	15	15	15	15	15	16	16	16	17	17	17	17	17							
0.381 – 0.400 (0.0150 – 0.0157)	5	5	6	6	6	6	7	7	8	8	8	8	8	9	9	9	9	9	10	10	10	10	10	11	11	11	11	11	12	12	12	12	12	13	13	13	13	13	14	14	14	14	14	15	15	15	15	16	16	16	16	16	17	17	17	17	17								
0.401 – 0.420 (0.0158 – 0.0165)	5	6	6	6	6	7	7	8	8	8	8	9	9	9	9	9	10	10	10	10	10	11	11	11	11	11	12	12	12	12	12	13	13	13	13	13	14	14	14	14	14	15	15	15	15	15	16	16	16	16	16	17	17	17	17										
0.421 – 0.440 (0.0166 – 0.0173)	6	6	6	7	7	7	8	8	8	9	9	9	9	9	10	10	10	10	10	11	11	11	11	11	12	12	12	12	12	13	13	13	13	13	14	14	14	14	14	15	15	15	15	15	16	16	16	16	16	17	17	17	17	17											
0.441 – 0.460 (0.0174 – 0.0181)	6	6	7	7	7	8	8	8	9	9	9	9	10	10	10	10	10	11	11	11	11	11	12	12	12	12	12	13	13	13	13	13	14	14	14	14	14	15	15	15	15	15	16	16	16	16	16	17	17	17	17	17	17												
0.461 – 0.480 (0.0181 – 0.0189)	6	7	7	7	8	8	8	9	9	9	10	10	10	10	10	11	11	11	11	11	12	12	12	12	12	13	13	13	13	13	14	14	14	14	14	15	15	15	15	15	16	16	16	16	16	17	17	17	17	17	17	17													
0.481 – 0.500 (0.0189 – 0.0197)	7	7	8	8	8	8	9	9	10	10	10	10	10	11	11	11	11	11	12	12	12	12	12	13	13	13	13	13	14	14	14	14	14	15	15	15	15	15	16	16	16	16	16	17	17	17	17	17	17	17	17														
0.501 – 0.520 (0.0197 – 0.0205)	7	8	8	8	8	9	9	10	10	10	10	11	11	11	11	11	12	12	12	12	12	13	13	13	13	13	14	14	14	14	14	15	15	15	15	15	16	16	16	16	16	17	17	17	17	17	17	17	17																
0.521 – 0.540 (0.0205 – 0.0213)	8	8	8	9	9	9	10	10	10	11	11	11	11	11	12	12	12	12	12	13	13	13	13	13	14	14	14	14	14	15	15	15	15	15	16	16	16	16	16	17	17	17	17	17	17	17	17																		
0.541 – 0.560 (0.0213 – 0.0220)	8	8	9	9	9	10	10	10	11	11	11	11	12	12	12	12	12	13	13	13	13	13	14	14	14	14	14	15	15	15	15	15	16	16	16	16	16	17	17	17	17	17	17	17	17																				
0.561 – 0.580 (0.0221 – 0.0228)	8	9	9	9	10	10	10	11	11	11	12	12	12	12	12	13	13	13	13	13	14	14	14	14	14	15	15	15	15	15	16	16	16	16	16	17	17	17	17	17	17	17	17																						
0.581 – 0.600 (0.0229 – 0.0236)	9	9	10	10	10	10	11	11	12	12	12	12	12	13	13	13	13	13	14	14	14	14	14	15	15	15	15	15	16	16	16	16	16	17	17	17	17	17	17	17	17																								
0.601 – 0.620 (0.0237 – 0.0244)	9	10	10	10	10	11	11	12	12	12	12	13	13	13	13	13	14	14	14	14	14	15	15	15	15	15	16	16	16	16	16	17	17	17	17	17	17	17	17																										
0.621 – 0.640 (0.0244 – 0.0252)	10	10	10	11	11	11	12	12	12	13	13	13	13	13	14	14	14	14	14	15	15	15	15	15	16	16	16	16	16	17	17	17	17	17	17	17	17																												
0.641 – 0.660 (0.0252 – 0.0260)	10	10	11	11	11	12	12	12	13	13	13	13	14	14	14	14	14	15	15	15	15	15	16	16	16	16	16	17	17	17	17	17	17	17	17																														
0.661 – 0.680 (0.0260 – 0.0268)	10	11	11	11	12	12	12	13	13	13	14	14	14	14	14	15	15	15	15	15	16	16	16	16	16	17	17	17	17	17	17	17	17																																
0.681 – 0.700 (0.0268 – 0.0276)	11	11	12	12	12	12	13	13	14	14	14	14	14	15	15	15	15	15	16	16	16	16	16	17	17	17	17	17	17	17	17																																		
0.701 – 0.720 (0.0276 – 0.0283)	11	12	12	12	12	13	13	14	14	14	14	15	15	15	15	15	16	16	16	16	16	17	17	17	17	17	17	17	17																																				
0.721 – 0.740 (0.0284 – 0.0291)	12	12	12	13	13	13	14	14	14	15	15	15	15	15	16	16	16	16	16	17	17	17	17	17	17	17	17																																						
0.741 – 0.760 (0.0292 – 0.0299)	12	12	13	13	13	14	14	14	15	15	15	15	16	16	16	16	16	17	17	17	17	17	17	17	17																																								
0.761 – 0.780 (0.0300 – 0.0307)	12	13	13	13	14	14	14	15	15	15	16	16	16	16	16	17	17	17	17	17	17	17	17																																										
0.781 – 0.800 (0.0307 – 0.0315)	13	13	14	14	14	14	15	15	16	16	16	16	16	17	17	17	17	17	17	17	17																																												
0.801 – 0.820 (0.0315 – 0.0323)	13	14	14	14	14	15	15	16	16	16	16	17	17	17	17	17	17	17	17																																														
0.821 – 0.840 (0.0323 – 0.0331)	14	14	14	15	15	15	16	16	16	17	17	17	17	17	17	17	17																																																
0.841 – 0.860 (0.0331 – 0.0339)	14	14	15	15	15	16	16	16	17	17	17	17	17	17	17																																																		
0.861 – 0.880 (0.0339 – 0.0346)	14	15	15	15	16	16	16	17	17	17	17	17	17																																																				
0.881 – 0.900 (0.0347 – 0.0354)	15	15	16	16	16	16	17	17	17	17	17																																																						
0.901 – 0.920 (0.0355 – 0.0362)	15	16	16	16	16	17	17	17	17																																																										
0.921 – 0.940 (0.0363 – 0.0370)	16	16	16	17	17	17	17	17																																																											
0.941 – 0.960 (0.0370 – 0.0378)	16	16	17	17	17	17	17																																																												
0.961 – 0.980 (0.0378 – 0.0386)	16	17	17	17	17	17																																																													
0.981 – 1.000 (0.0386 – 0.0394)	17	17	17	17	17																																																														
1.001 – 1.020 (0.0394 – 0.0402)	17	17	17																																																																
1.021 – 1.040 (0.0402 – 0.0409)	17	17																																																																	
1.041 – 1.050 (0.0410 – 0.0413)	17																																																																		

Intake valve clearance (Cold):
0.15 - 0.25 mm (0.006 - 0.010 in.)

EXAMPLE: The 2.800 mm (0.1102 in.) shim is installed, and the measured clearance is 0.450 mm (0.0177 in.)
Replace the 2.800 mm (0.1102 in.) shim with a new No.12 shim.

New shim thickness mm (in.)

Shim No.	Thickness	Shim No.	Thickness
1	2.500 (0.0984)	10	2.950 (0.1161)
2	2.550 (0.1004)	11	3.000 (0.1181)
3	2.600 (0.1024)	12	3.050 (0.1201)
4	2.650 (0.1043)	13	3.100 (0.1220)
5	2.700 (0.1063)	14	3.150 (0.1240)
6	2.750 (0.1083)	15	3.200 (0.1260)
7	2.800 (0.1102)	16	3.250 (0.1280)
8	2.850 (0.1122)	17	3.300 (0.1299)
9	2.900 (0.1142)		

HINT: New shims have the thickness in millimeters imprinted on the face.

V00719

Author :

Date :

Adjusting Shim Selection Chart (Exhaust)

Installed shim thickness mm (in.) / Measured clearance mm (in.)	2.500 (0.0984)	2.520 (0.0992)	2.540 (0.1000)	2.550 (0.1004)	2.560 (0.1008)	2.580 (0.1016)	2.600 (0.1024)	2.620 (0.1031)	2.640 (0.1039)	2.650 (0.1043)	2.660 (0.1047)	2.670 (0.1051)	2.680 (0.1055)	2.690 (0.1059)	2.700 (0.1063)	2.710 (0.1067)	2.720 (0.1071)	2.730 (0.1075)	2.740 (0.1079)	2.750 (0.1083)	2.760 (0.1087)	2.770 (0.1091)	2.780 (0.1094)	2.790 (0.1098)	2.800 (0.1102)	2.810 (0.1106)	2.820 (0.1110)	2.830 (0.1114)	2.840 (0.1118)	2.850 (0.1122)	2.860 (0.1126)	2.870 (0.1130)	2.880 (0.1134)	2.890 (0.1138)	2.900 (0.1142)	2.910 (0.1146)	2.920 (0.1150)	2.930 (0.1154)	2.940 (0.1157)	2.950 (0.1161)	2.960 (0.1165)	2.970 (0.1169)	2.980 (0.1173)	2.990 (0.1177)	3.000 (0.1181)	3.010 (0.1185)	3.020 (0.1189)	3.030 (0.1193)	3.040 (0.1197)	3.050 (0.1201)	3.060 (0.1205)	3.080 (0.1213)	3.100 (0.1220)	3.120 (0.1228)	3.140 (0.1236)	3.150 (0.1240)	3.160 (0.1244)	3.180 (0.1252)	3.200 (0.1260)	3.220 (0.1268)	3.240 (0.1276)	3.250 (0.1280)	3.260 (0.1283)	3.280 (0.1291)	3.300 (0.1299)
0.000 – 0.020 (0.0000 – 0.0008)																		1	1	1	1	1	1	1	1	1	2	2	2	2	2	3	3	3	3	3	4	4	4	4	4	5	5	5	5	5	6	6	6	6	6	7	7	8	8	8	8	9	9	10	10	10	10	11	11
0.021 – 0.040 (0.0008 – 0.0016)																1	1	1	1	1	1	1	1	1	2	2	2	2	2	3	3	3	3	3	4	4	4	4	4	5	5	5	5	5	6	6	6	6	6	7	7	7	8	8	8	9	9	9	10	10	10	11	11	11	12
0.041 – 0.060 (0.0016 – 0.0024)														1	1	1	1	1	1	1	1	1	2	2	2	2	2	3	3	3	3	3	4	4	4	4	4	5	5	5	5	5	6	6	6	6	6	7	7	7	7	8	8	8	9	9	9	10	10	10	11	11	11	12	12
0.061 – 0.080 (0.0024 – 0.0031)												1	1	1	1	1	1	1	1	1	2	2	2	2	2	3	3	3	3	3	4	4	4	4	4	5	5	5	5	5	6	6	6	6	6	7	7	7	7	7	8	8	8	9	9	9	10	10	10	11	11	11	12	12	12
0.081 – 0.100 (0.0032 – 0.0039)										1	1	1	1	1	1	1	1	1	2	2	2	2	2	3	3	3	3	3	4	4	4	4	4	5	5	5	5	5	6	6	6	6	6	7	7	7	7	7	8	8	8	8	9	9	10	10	10	10	11	11	12	12	12	12	13
0.101 – 0.120 (0.0040 – 0.0047)									1	1	1	1	1	1	1	1	2	2	2	2	2	3	3	3	3	3	4	4	4	4	4	5	5	5	5	5	6	6	6	6	6	7	7	7	7	7	8	8	8	8	8	9	9	10	10	10	10	11	11	12	12	12	12	13	13
0.121 – 0.140 (0.0048 – 0.0055)								1	1	1	1	1	1	1	2	2	2	2	2	3	3	3	3	3	4	4	4	4	4	5	5	5	5	5	6	6	6	6	6	7	7	7	7	7	8	8	8	8	8	9	9	9	10	10	10	11	11	11	12	12	12	13	13	13	14
0.141 – 0.160 (0.0056 – 0.0063)							1	1	1	1	1	1	2	2	2	2	2	3	3	3	3	3	4	4	4	4	4	5	5	5	5	5	6	6	6	6	6	7	7	7	7	7	8	8	8	8	8	9	9	9	9	10	10	10	11	11	11	12	12	12	13	13	13	14	14
0.161 – 0.180 (0.0063 – 0.0071)						1	1	1	1	1	2	2	2	2	2	3	3	3	3	3	4	4	4	4	4	5	5	5	5	5	6	6	6	6	6	7	7	7	7	7	8	8	8	8	8	9	9	9	9	9	10	10	10	11	11	11	12	12	12	13	13	13	14	14	14
0.181 – 0.200 (0.0071 – 0.0079)				1	1	1	1	1	2	2	2	2	2	3	3	3	3	3	4	4	4	4	4	5	5	5	5	5	6	6	6	6	6	7	7	7	7	7	8	8	8	8	8	9	9	9	9	9	10	10	10	10	11	11	12	12	12	12	13	13	14	14	14	14	15
0.201 – 0.220 (0.0079 – 0.0087)			1	1	1	1	1	2	2	2	2	3	3	3	3	3	4	4	4	4	4	5	5	5	5	5	6	6	6	6	6	7	7	7	7	7	8	8	8	8	8	9	9	9	9	9	10	10	10	10	10	11	11	12	12	12	12	13	13	14	14	14	14	15	15
0.221 – 0.240 (0.0087 – 0.0094)		1	1	1	1	1	2	2	2	3	3	3	3	3	4	4	4	4	4	5	5	5	5	5	6	6	6	6	6	7	7	7	7	7	8	8	8	8	8	9	9	9	9	9	10	10	10	10	10	11	11	11	12	12	12	13	13	13	14	14	14	15	15	15	16
0.241 – 0.249 (0.0095 – 0.0098)		1	1	1	1	2	2	2	3	3	3	3	4	4	4	4	4	5	5	5	5	5	6	6	6	6	6	7	7	7	7	7	8	8	8	8	8	9	9	9	9	9	10	10	10	10	10	11	11	11	11	12	12	12	13	13	13	14	14	14	15	15	15	16	16
0.250 – 0.350 (0.0098 – 0.0138)																																																																	
0.351 – 0.360 (0.0138 – 0.0142)	2	3	3	3	3	4	4	5	5	5	5	6	6	6	6	6	7	7	7	7	7	8	8	8	8	8	9	9	9	9	9	10	10	10	10	10	11	11	11	11	11	12	12	12	12	12	13	13	13	13	13	14	14	15	15	15	15	16	16	17	17	17	17	17	
0.361 – 0.380 (0.0142 – 0.0150)	2	3	3	3	4	4	4	5	5	5	6	6	6	6	6	7	7	7	7	7	8	8	8	8	8	9	9	9	9	9	10	10	10	10	10	11	11	11	11	11	12	12	12	12	12	13	13	13	13	13	14	14	14	15	15	15	16	16	16	17	17	17	17	17	
0.381 – 0.400 (0.0150 – 0.0157)	3	3	4	4	4	4	5	5	6	6	6	6	6	7	7	7	7	7	8	8	8	8	8	9	9	9	9	9	10	10	10	10	10	11	11	11	11	11	12	12	12	12	12	13	13	13	13	13	14	14	14	14	15	15	16	16	16	16	17	17	17	17	17		
0.401 – 0.420 (0.0158 – 0.0165)	3	4	4	4	4	5	5	6	6	6	6	7	7	7	7	7	8	8	8	8	8	9	9	9	9	9	10	10	10	10	10	11	11	11	11	11	12	12	12	12	12	13	13	13	13	13	14	14	14	14	14	15	15	16	16	16	16	17	17	17	17				
0.421 – 0.440 (0.0166 – 0.0173)	4	4	4	5	5	5	6	6	6	7	7	7	7	7	8	8	8	8	8	9	9	9	9	9	10	10	10	10	10	11	11	11	11	11	12	12	12	12	12	13	13	13	13	13	14	14	14	14	14	15	15	15	16	16	16	17	17	17	17	17					
0.441 – 0.460 (0.0174 – 0.0181)	4	4	5	5	5	6	6	6	7	7	7	7	8	8	8	8	8	9	9	9	9	9	10	10	10	10	10	11	11	11	11	11	12	12	12	12	12	13	13	13	13	13	14	14	14	14	14	15	15	15	15	16	16	16	17	17	17	17	17						
0.461 – 0.480 (0.0181 – 0.0189)	4	5	5	5	6	6	6	7	7	7	8	8	8	8	8	9	9	9	9	9	10	10	10	10	10	11	11	11	11	11	12	12	12	12	12	13	13	13	13	13	14	14	14	14	14	15	15	15	15	15	16	16	16	17	17	17	17	17							
0.481 – 0.500 (0.0189 – 0.0197)	5	5	6	6	6	6	7	7	8	8	8	8	8	9	9	9	9	9	10	10	10	10	10	11	11	11	11	11	12	12	12	12	12	13	13	13	13	13	14	14	14	14	14	15	15	15	15	15	16	16	16	16	17	17	17	17	17								
0.501 – 0.520 (0.0197 – 0.0205)	5	6	6	6	6	7	7	8	8	8	8	9	9	9	9	9	10	10	10	10	10	11	11	11	11	11	12	12	12	12	12	13	13	13	13	13	14	14	14	14	14	15	15	15	15	15	16	16	16	16	16	17	17	17	17										
0.521 – 0.540 (0.0205 – 0.0213)	6	6	6	7	7	7	8	8	8	9	9	9	9	9	10	10	10	10	10	11	11	11	11	11	12	12	12	12	12	13	13	13	13	13	14	14	14	14	14	15	15	15	15	15	16	16	16	16	16	17	17	17	17	17											
0.541 – 0.560 (0.0213 – 0.0220)	6	6	7	7	7	8	8	8	9	9	9	9	10	10	10	10	10	11	11	11	11	11	12	12	12	12	12	13	13	13	13	13	14	14	14	14	14	15	15	15	15	15	16	16	16	16	16	17	17	17	17	17	17												
0.561 – 0.580 (0.0221 – 0.0228)	6	7	7	7	8	8	8	9	9	9	10	10	10	10	10	11	11	11	11	11	12	12	12	12	12	13	13	13	13	13	14	14	14	14	14	15	15	15	15	15	16	16	16	16	16	17	17	17	17	17	17	17													
0.581 – 0.600 (0.0229 – 0.0236)	7	7	8	8	8	8	9	9	10	10	10	10	10	11	11	11	11	11	12	12	12	12	12	13	13	13	13	13	14	14	14	14	14	15	15	15	15	15	16	16	16	16	16	17	17	17	17	17	17	17	17														
0.601 – 0.620 (0.0237 – 0.0244)	7	8	8	8	8	9	9	10	10	10	10	11	11	11	11	11	12	12	12	12	12	13	13	13	13	13	14	14	14	14	14	15	15	15	15	15	16	16	16	16	16	17	17	17	17	17	17	17	17																
0.621 – 0.640 (0.0244 – 0.0252)	8	8	8	9	9	9	10	10	10	11	11	11	11	11	12	12	12	12	12	13	13	13	13	13	14	14	14	14	14	15	15	15	15	15	16	16	16	16	16	17	17	17	17	17	17	17	17																		
0.641 – 0.660 (0.0252 – 0.0260)	8	8	9	9	9	10	10	10	11	11	11	11	12	12	12	12	12	13	13	13	13	13	14	14	14	14	14	15	15	15	15	15	16	16	16	16	16	17	17	17	17	17	17	17	17																				
0.661 – 0.680 (0.0260 – 0.0268)	8	9	9	9	10	10	10	11	11	11	12	12	12	12	12	13	13	13	13	13	14	14	14	14	14	15	15	15	15	15	16	16	16	16	16	17	17	17	17	17	17	17	17																						
0.681 – 0.700 (0.0268 – 0.0276)	9	9	10	10	10	10	11	11	12	12	12	12	12	13	13	13	13	13	14	14	14	14	14	15	15	15	15	15	16	16	16	16	16	17	17	17	17	17	17	17	17																								
0.701 – 0.720 (0.0276 – 0.0283)	9	10	10	10	10	11	11	12	12	12	12	13	13	13	13	13	14	14	14	14	14	15	15	15	15	15	16	16	16	16	16	17	17	17	17	17	17	17	17																										
0.721 – 0.740 (0.0284 – 0.0291)	10	10	10	11	11	11	12	12	12	13	13	13	13	13	14	14	14	14	14	15	15	15	15	15	16	16	16	16	16	17	17	17	17	17	17	17	17																												
0.741 – 0.760 (0.0292 – 0.0299)	10	10	11	11	11	12	12	12	13	13	13	13	14	14	14	14	14	15	15	15	15	15	16	16	16	16	16	17	17	17	17	17	17	17	17																														
0.761 – 0.780 (0.0300 – 0.0307)	10	11	11	11	12	12	12	13	13	13	14	14	14	14	14	15	15	15	15	15	16	16	16	16	16	17	17	17	17	17	17	17	17																																
0.781 – 0.800 (0.0307 – 0.0315)	11	11	12	12	12	12	13	13	14	14	14	14	14	15	15	15	15	15	16	16	16	16	16	17	17	17	17	17	17	17	17																																		
0.801 – 0.820 (0.0315 – 0.0323)	11	12	12	12	12	13	13	14	14	14	14	15	15	15	15	15	16	16	16	16	16	17	17	17	17	17	17	17	17																																				
0.821 – 0.840 (0.0323 – 0.0331)	12	12	12	13	13	13	14	14	14	15	15	15	15	15	16	16	16	16	16	17	17	17	17	17	17	17	17																																						
0.841 – 0.860 (0.0331 – 0.0339)	12	12	13	13	13	14	14	14	15	15	15	15	16	16	16	16	16	17	17	17	17	17	17	17	17																																								
0.861 – 0.880 (0.0339 – 0.0346)	12	13	13	13	14	14	14	15	15	15	16	16	16	16	16	17	17	17	17	17	17	17	17																																										
0.881 – 0.900 (0.0347 – 0.0354)	13	13	14	14	14	14	15	15	16	16	16	16	16	17	17	17	17	17	17	17	17																																												
0.901 – 0.920 (0.0355 – 0.0362)	13	14	14	14	14	15	15	16	16	16	16	17	17	17	17	17	17	17	17																																														
0.921 – 0.940 (0.0363 – 0.0370)	14	14	14	15	15	15	16	16	16	17	17	17	17	17	17	17	17																																																
0.941 – 0.960 (0.0370 – 0.0378)	14	14	15	15	15	16	16	16	17	17	17	17	17	17	17																																																		
0.961 – 0.980 (0.0378 – 0.0386)	14	15	15	15	16	16	16	17	17	17	17	17	17																																																				
0.981 – 1.000 (0.0386 – 0.0394)	15	15	16	16	16	16	17	17	17	17	17																																																						
1.001 – 1.020 (0.0394 – 0.0402)	15	16	16	16	16	17	17	17	17																																																										
1.021 – 1.040 (0.0402 – 0.0409)	16	16	16	17	17	17	17	17																																																											
1.041 – 1.060 (0.0410 – 0.0417)	16	16	17	17	17	17	17																																																												
1.061 – 1.080 (0.0418 – 0.0425)	16	17	17	17	17	17																																																													
1.081 – 1.100 (0.0426 – 0.0433)	17	17	17	17	17																																																														
1.101 – 1.120 (0.0433 – 0.0441)	17	17	17																																																															
1.121 – 1.140 (0.0441 – 0.0449)	17	17																																																																
1.141 – 1.150 (0.0449 – 0.0453)	17																																																																		

Exhaust valve clearance (Cold):
0.25 - 0.35 mm (0.010 - 0.014 in.)

EXAMPLE: The 2.800 mm (0.1102 in.) shim is installed, and the measured clearance is 0.450 mm (0.0177 in.)
Replace the 2.800 mm (0.1102 in.) shim with a new No.10 shim.

New shim thickness mm (in.)

Shim No.	Thickness	Shim No.	Thickness
1	2.500 (0.0984)	10	2.950 (0.1161)
2	2.550 (0.1004)	11	3.000 (0.1181)
3	2.600 (0.1024)	12	3.050 (0.1201)
4	2.650 (0.1043)	13	3.100 (0.1220)
5	2.700 (0.1063)	14	3.150 (0.1240)
6	2.750 (0.1083)	15	3.200 (0.1260)
7	2.800 (0.1102)	16	3.250 (0.1280)
8	2.850 (0.1122)	17	3.300 (0.1299)
9	2.900 (0.1142)		

HINT: New shims have the thickness in millimeters imprinted on the face.

V00720

EM0AF-02

INSTALLATION

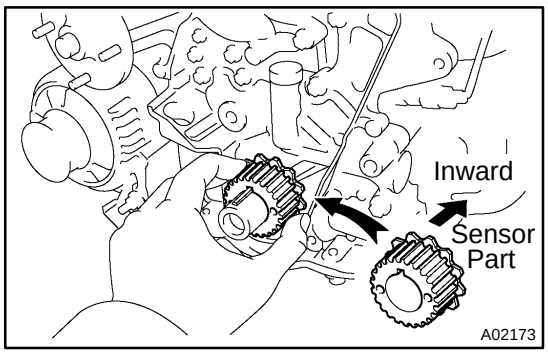

1. INSTALL CRANKSHAFT TIMING PULLEY

(a) Align the pulley set key with the key groove of the pulley.

(b) Slide on the timing pulley facing the flange side inward.

NOTICE:

Do not scratch the sensor part of the crankshaft timing pulley.

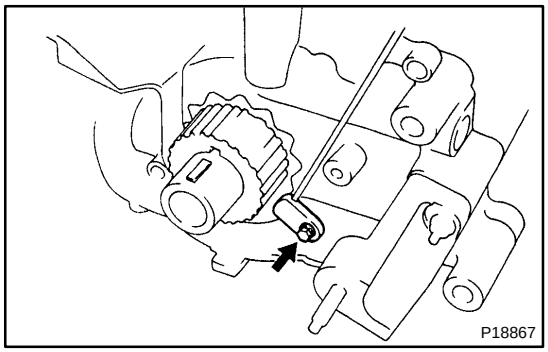

(c) Install the timing belt plate with the bolt.
Torque: 7.8 N·m (80 kgf·cm, 69 in.·lbf)

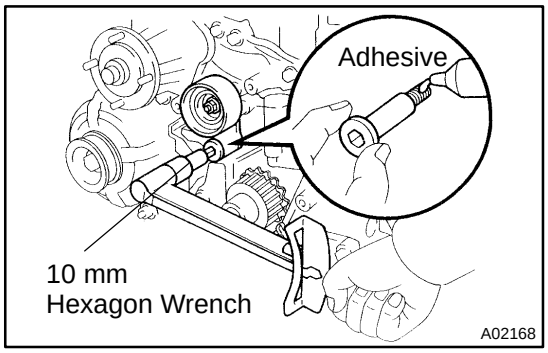

2. INSTALL IDLER PULLEY

(a) Apply adhesive to 2 or 3 threads of the pivot bolt.
Adhesive:
Part No. 08833-00080, THREE BOND 1344, LOCTITE 242 or equivalent

(b) Using a 10 mm hexagon wrench, install the plate washer and pulley with the pivot bolt.
Torque: 35 N·m (350 kgf·cm, 26 ft·lbf)

(c) Check that the pulley bracket moves smoothly.

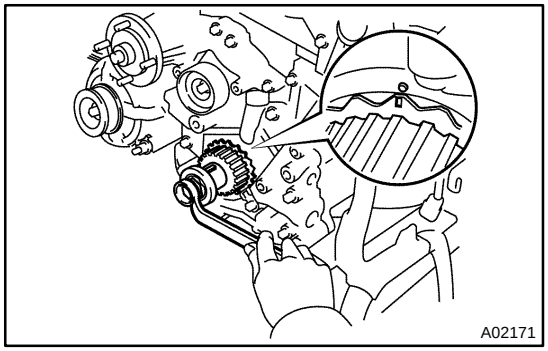

3. TEMPORARILY INSTALL TIMING BELT

NOTICE:

The engine should be cold.

(a) Using the crankshaft pulley bolt, turn the crankshaft, and align the timing marks on the crankshaft timing pulley and on the oil pump body.

(b) Remove any oil or water on the crankshaft timing pulley and idler pulley, and keep them clean.

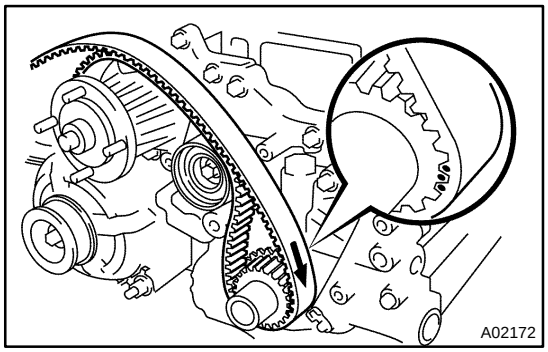

(c) Install the timing belt on the crankshaft timing pulley and idler pulley.

HINT:

(When re-using timing belt):

Align the match marks of the crankshaft timing pulley and timing belt, and install the belt with the arrow pointing in the direction of engine revolution.

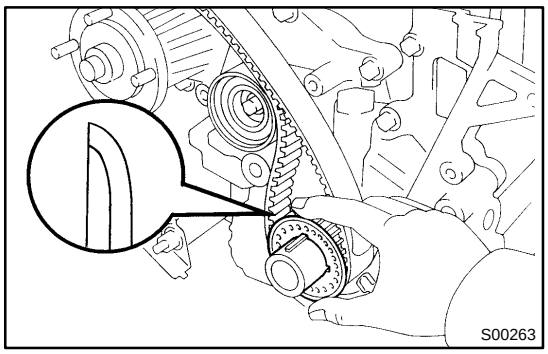

4. INSTALL TIMING BELT GUIDE

Install the guide, facing the cup side outward.

5. INSTALL NO.1 TIMING BELT COVER

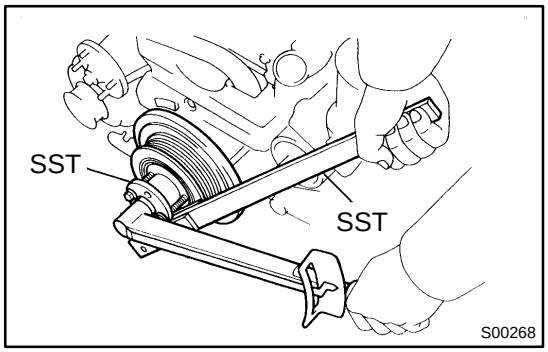

6. INSTALL CRANKSHAFT PULLEY

(a) Align the pulley set key with the key groove of the pulley, and slide on the pulley.

(b) Using SST, install the bolt.
SST 09213-70010, 09330-00021
Torque: 324 N·m (3,300 kgf·cm, 239 ft·lbf)

7. A/T:
CONNECT OIL COOLER TUBES

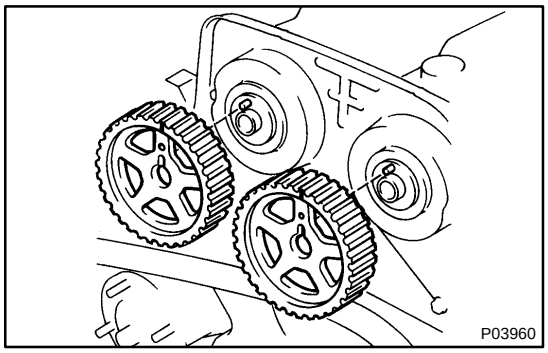

8. INSTALL CAMSHAFT TIMING PULLEYS

(a) Align the camshaft knock pin with the groove of the pulley, and slide on the timing pulley.

(b) Temporarily install the timing pulley bolt.

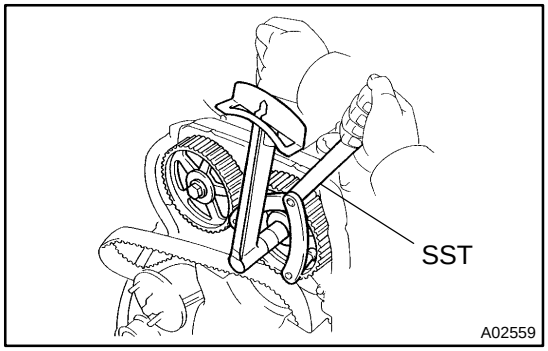

(c) Using SST, tighten the pulley bolt.
SST 09960-10010 (09962-01000, 09963-01000)
Torque: 79 N·m (810 kgf·cm, 59 ft·lbf)

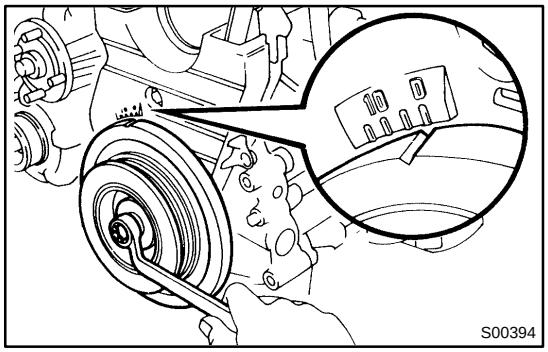

9. SET NO.1 CYLINDER TO TDC/COMPRESSION

(a) Turn the crankshaft pulley, and align its groove with timing mark ”0” of the No.1 timing belt cover.

NOTICE:
Always turn the crankshaft clockwise.

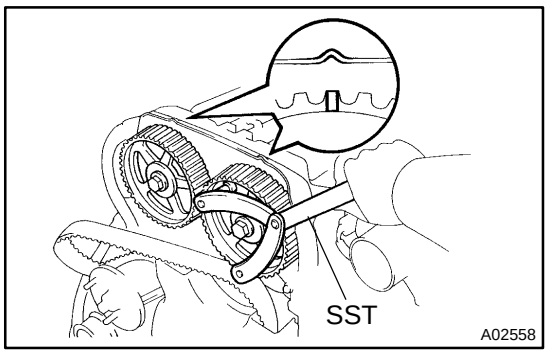

(b) Using SST, align the timing marks of the camshaft timing pulleys and No.4 timing belt cover.
SST 09960-10010 (09962-01000, 09963-01000)

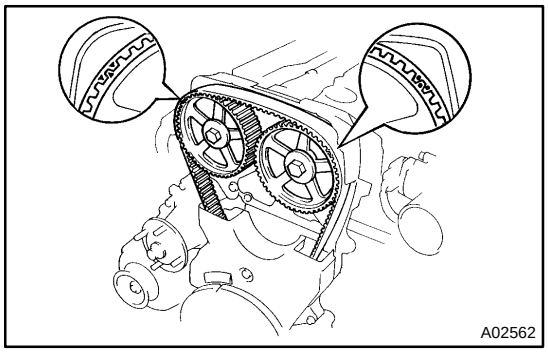

10. INSTALL TIMING BELT

HINT:
(When re-using timing belt):
Align the matchmarks of the timing belt and camshaft timing pulleys.

(a) Remove any oil or water on the camshaft timing pulley, and keep it clean.
(b) Install the timing belt, checking the tension between the crankshaft timing pulley and exhaust camshaft timing pulley.

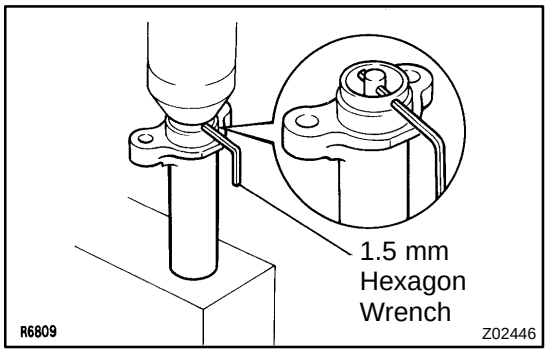

11. SET TIMING BELT TENSIONER

(a) Using a press, slowly press in the push rod using 981 - 9,807 N (100 - 1,000 kgf, 220 - 2,205 lbf) of force.
(b) Align the holes of the push rod and housing, pass a 1.5 mm hexagon wrench through the holes to keep the push rod retracted.
(c) Release the press.

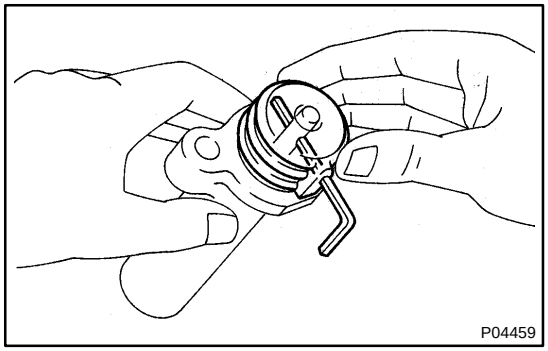

(d) Install the dust boot onto the tensioner.

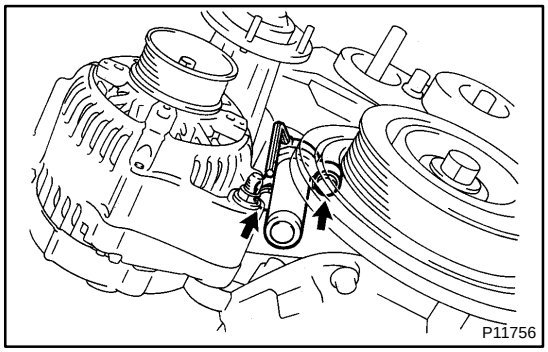

12. INSTALL TIMING BELT TENSIONER

(a) Temporarily install the tensioner with the 2 bolts.
(b) Alternately tighten the 2 bolts.
Torque: 26 N·m (270 kgf·cm, 20 ft·lbf)

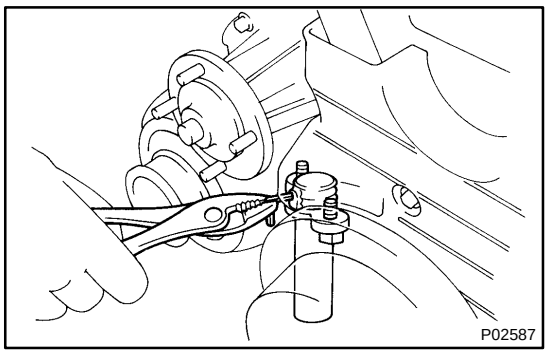

(c) Remove the 1.5 mm hexagon wrench from the tensioner.

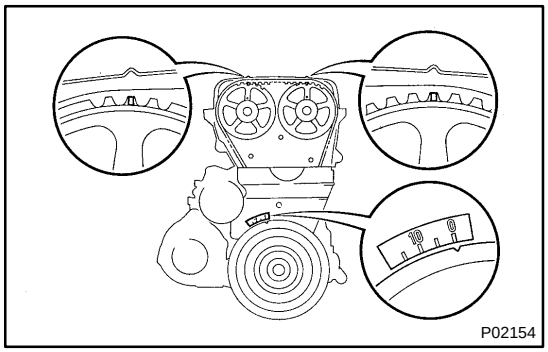

13. CHECK VALVE TIMING

(a) Slowly turn the crankshaft pulley 2 revolutions from TDC to TDC.

NOTICE:

Always turn the crankshaft clockwise.

(b) Check that each pulley aligns with the timing marks as shown in the illustration.

If the marks do not align, remove the timing belt and reinstall it.

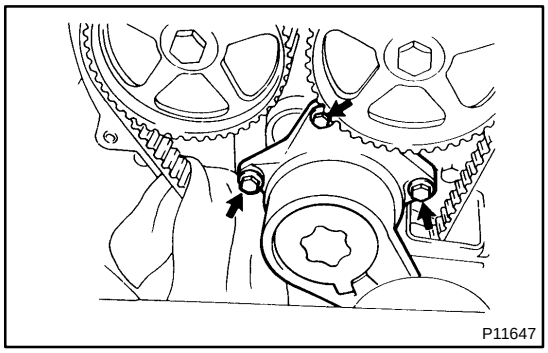

14. INSTALL DRIVE BELT TENSIONER

Install the tensioner with the 3 bolts.

Torque: 21 N·m (210 kgf·cm, 15 ft·lbf)

NOTICE:

Be careful not to drop the bolts inside the timing belt cover.

15. INSTALL NO.2 TIMING BELT COVER

16. INSTALL NO.3 TIMING BELT COVER

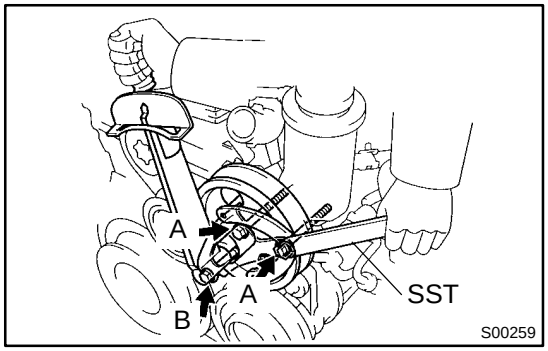

17. INSTALL PS PUMP

(a) Temporarily install the pump pulley with the nut.

(b) Using SST, tighten the pulley nut.

SST 09960-10010 (09962-01000, 09963-01000)

Torque: 43 N·m (440 kgf·cm, 32 ft·lbf)

18. INSTALL WATER PUMP PULLEY, FAN, FLUID COUPLING ASSEMBLY AND DRIVE BELT

(See page CO-11)

19. M/T:

INSTALL DRIVE BELT TENSIONER DAMPER

Torque: 20 N·m (200 kgf·cm, 14 ft·lbf)

20. INSTALL RADIATOR ASSEMBLY

(See page CO-28)

21. ROAD TEST

Check for abnormal noise, shock, slippage, correct shift points and smooth operation.

OIL AND FILTER

LU0JY-01

INSPECTION

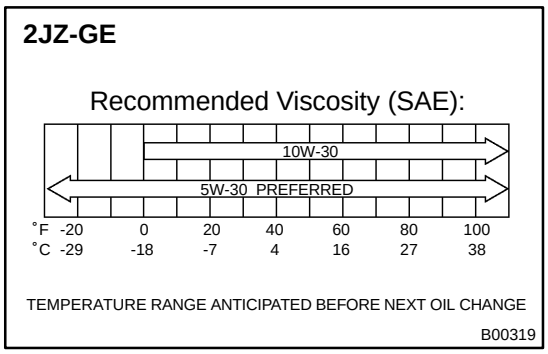

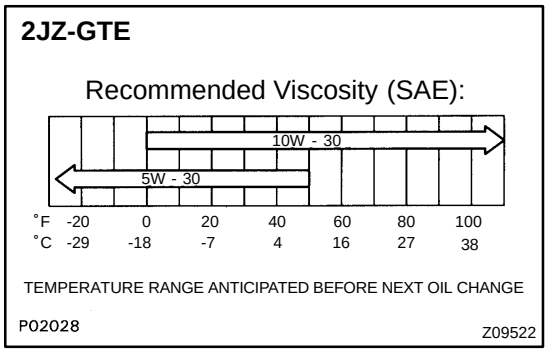

1. CHECK OIL QUALITY

Check the oil for deterioration, entry of water, discoloring or thinning.

If oil quality is visibly poor, replace the oil.

Oil grade (2JZ-GE):

API grade SH Energy-Conserving II or SJ, Energy-Conserving or ILSAC multigrade engine oil.

SAE 5W-30 is the best choice for your vehicle, for good fuel economy, and good starting in cold weather.

Oil grade (2JZ-GTE):

API grade SH Energy-Conserving II or SJ, Energy-Conserving or ILSAC multigrade engine oil.

Recommended viscosity is as shown in the illustration.

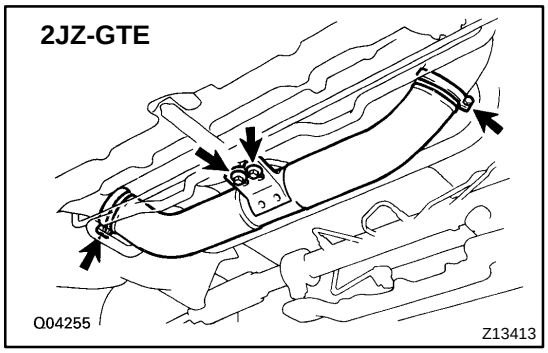

2. CHECK ENGINE OIL LEVEL

The oil level should be between the low level and full level marks on the dipstick.

If low, check for the leakage and add oil up to full level mark.

3. REMOVE ENGINE UNDER COVER

4. 2JZ-GTE:

REMOVE NO.2 AIR TUBE

Loosen the 2 hose clamps, and remove 2 bolts and air tube.

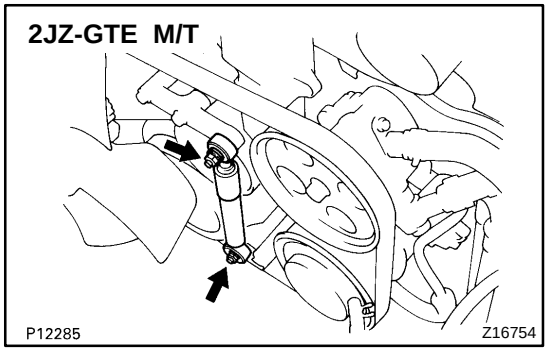

5. 2JZ-GTE M/T:

REMOVE DRIVE BELT TENSION DAMPER

Remove the 2 nuts and tensioner damper.

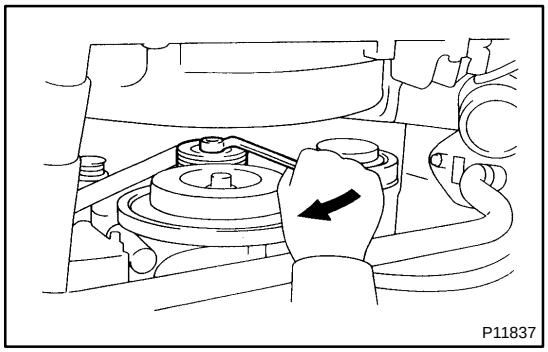

6. REMOVE DRIVE BELT

Loosen the drive belt tension by turning the drive belt tensioner clockwise, and remove the drive belt.

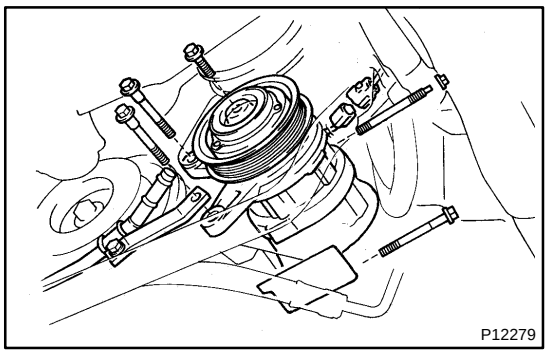

7. DISCONNECT A/C COMPRESSOR FROM ENGINE

(a) Remove the 4 bolts and nut.
(b) Using a torx socket (E10), remove the stud bolt.
(c) Disconnect the compressor connector.
(d) Remove 4 bolts and pull the compressor downward.

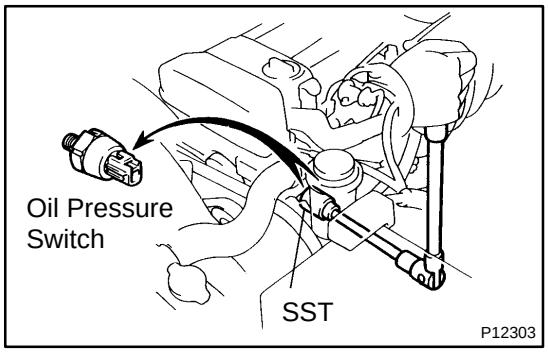

8. REMOVE OIL PRESSURE SWITCH, AND INSTALL OIL PRESSURE GAUGE

(a) Disconnect the oil pressure switch connector.
(b) Using SST, remove the oil pressure switch.
SST 09816-30010
(c) Install an oil pressure gauge.

9. REINSTALL A/C COMPRESSOR

(a) Temporarily install the A/C compressor with the 4 bolts.
(b) Connect the compressor connector.
(c) Install the compressor with the stud bolts, 4 bolts and nut.
Torque:
Stud bolt: 26 N·m (265 kgf·cm, 19 ft·lbf)
Bolt and nut: 52 N·m (530 kgf·cm, 38 ft·lbf)

10. REINSTALL DRIVE BELT

Install the drive belt by turning the drive belt tensioner clockwise.

11. WARM UP ENGINE

Allow the engine to warm up to normal operating temperature.

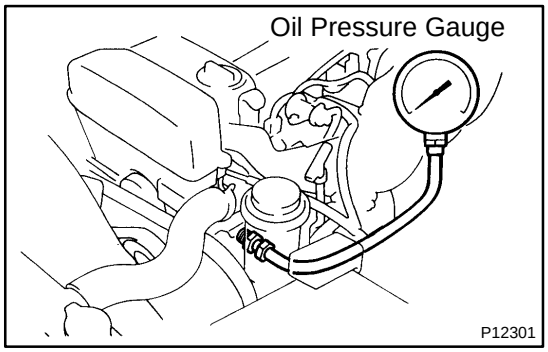

12. CHECK OIL PRESSURE

Oil pressure:
At idle
49 kPa (0.5 kgf/cm^2, 7.1 psi) or more
At 3,000 rpm (2JZ-GE) or 4,000 rpm (2JZ-GTE)
324 - 579 kPa
(3.3 - 5.9 kgf/cm^2, 47 - 84 psi)

13. REMOVE DRIVE BELT

14. DISCONNECT A/C COMPRESSOR FROM ENGINE

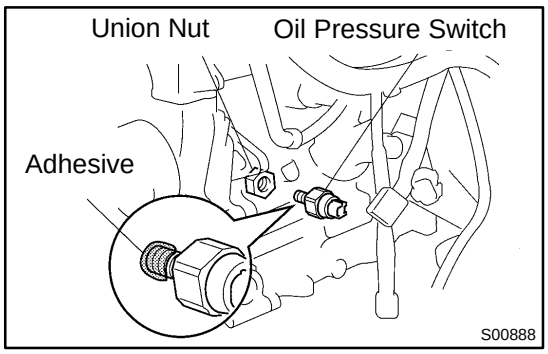

15. REMOVE OIL PRESSURE GAUGE, AND REINSTALL OIL PRESSURE SWITCH

(a) Remove the oil pressure gauge.

(b) Tighten the union nut.
Torque: 60 N·m (600 kgf·cm, 44 ft·lbf)

(c) Apply adhesive to 2 or 3 thread of the oil pressure switch.
Adhesive:
Part No. 08833-00080, THREE BOND 1344, LOCKTITE 242 or equivalent

(d) Using SST, install the oil pressure switch.
SST 09816-30010
Torque: 14 N·m (150 kgf·cm, 11 ft·lbf)

(e) Connect the oil pressure switch connector.

16. REINSTALL A/C COMPRESSOR

17. REINSTALL DRIVE BELT

18. START ENGINE AND CHECK FOR REAKS

19. 2JZ-GTE M/T:
INSTALL DRIVE BELT TENSIONER DAMPER
Torque: 20 N·m (200 kgf·cm, 14 ft·lbf)

20. 2JZ-GTE:
REINSTALL NO.2 AIR TUBE

21. REINSTALL ENGINE UNDER COVER

LU0JZ-01

REPLACEMENT

CAUTION:

- **Prolonged and repeated contact with mineral oil will result in the removal of natural fats from the skin, leading to dryness, irritation and dermatitis. In addition, used engine oil contains potentially harmful contaminants which may cause skin cancer.**
- **Exercise caution in order to minimize the length and frequency of contact of your skin to used oil. Wear protective clothing and gloves. Wash your skin thoroughly with soap and water, or use water-less hand cleaner, to remove any used engine oil. Do not use gasoline, thinners, or solvents.**
- **In order to preserve the environment, used oil and used oil filters must be disposed of only at designated disposal sites.**

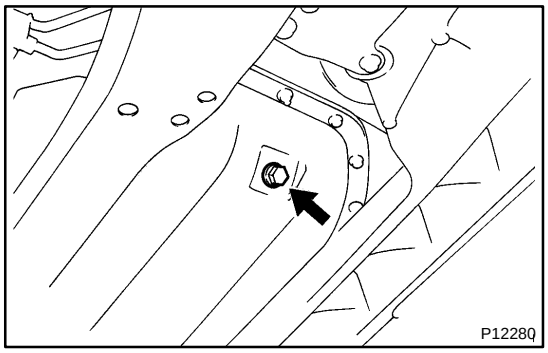

1. DRAIN ENGINE OIL

(a) Remove the oil filler cap.

(b) Remove the oil drain plug, and drain the oil into a container.

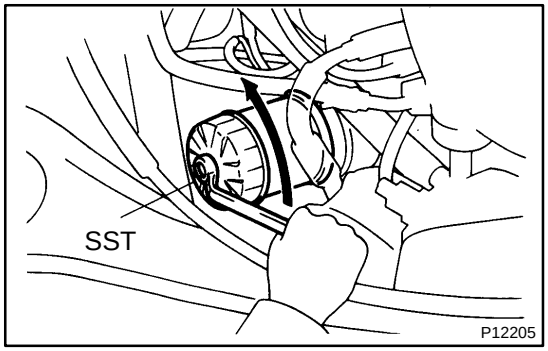

2. REPLACE OIL FILTER

(a) Using SST, remove the oil filter.
SST 09228-07501

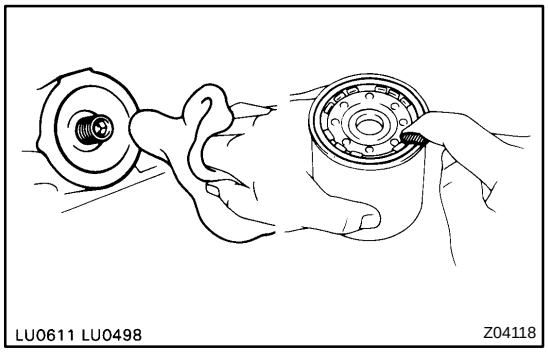

(b) Check and clean the oil filter installation surface.

(c) Apply clean engine oil to the gasket of a new oil filter.

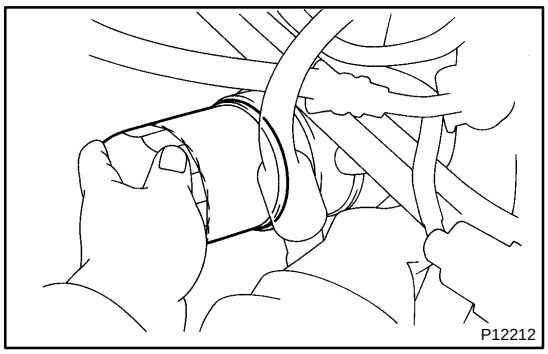

(d) Lightly screw the oil filter into place, and tighten it until the gasket contacts the seat.

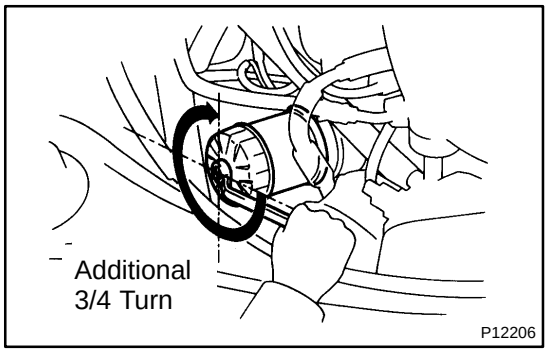

(e) Using SST, tighten it an additional 3/4 turn.
SST 09228-07501

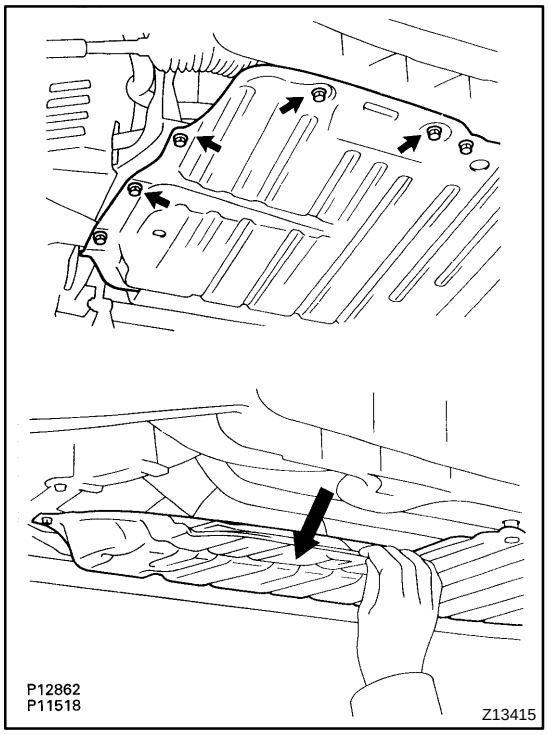

3. REFILL WITH ENGINE OIL

(a) To wipe off oil that has dripped onto the engine under cover, remove the 4 screws and bend the under cover downward.

NOTICE:

- **To avoid damaging the silencer, do not bend the engine under cover more than 150 mm (5.91 in.).**
- **If oil gets on the silencer, wipe it off with a dry rag.**

(b) Clean and install the oil drain plug with a new gasket.
Torque: 38 N·m (375 kgf·cm, 27 ft·lbf)

(c) Fill with fresh engine oil.

	w/ Oil filter Change	w/o Oil filter Change	Dry fill
2JZ-GE	5.2 liters (5.5 US qts, 4.6 Imp. qts)	4.9 liters (5.2 US qts, 4.3 Imp. qts)	6.5 liters (6.9 US qts, 5.7 Imp. qts)
2JZ-GTE	5.0 liters (5.3 US qts, 4.4 Imp. qts)	4.7 liters (5.0 US qts, 4.1 Imp. qts)	6.5 liters 6.9 US qts, 5.7 Imp. qts)

(d) Reinstall the oil filler cap.

4. START ENGINE AND CHECK FOR OIL LEAKS

5. RECHECK ENGINE OIL LEVEL

OIL PUMP

COMPONENTS

LU04U-02

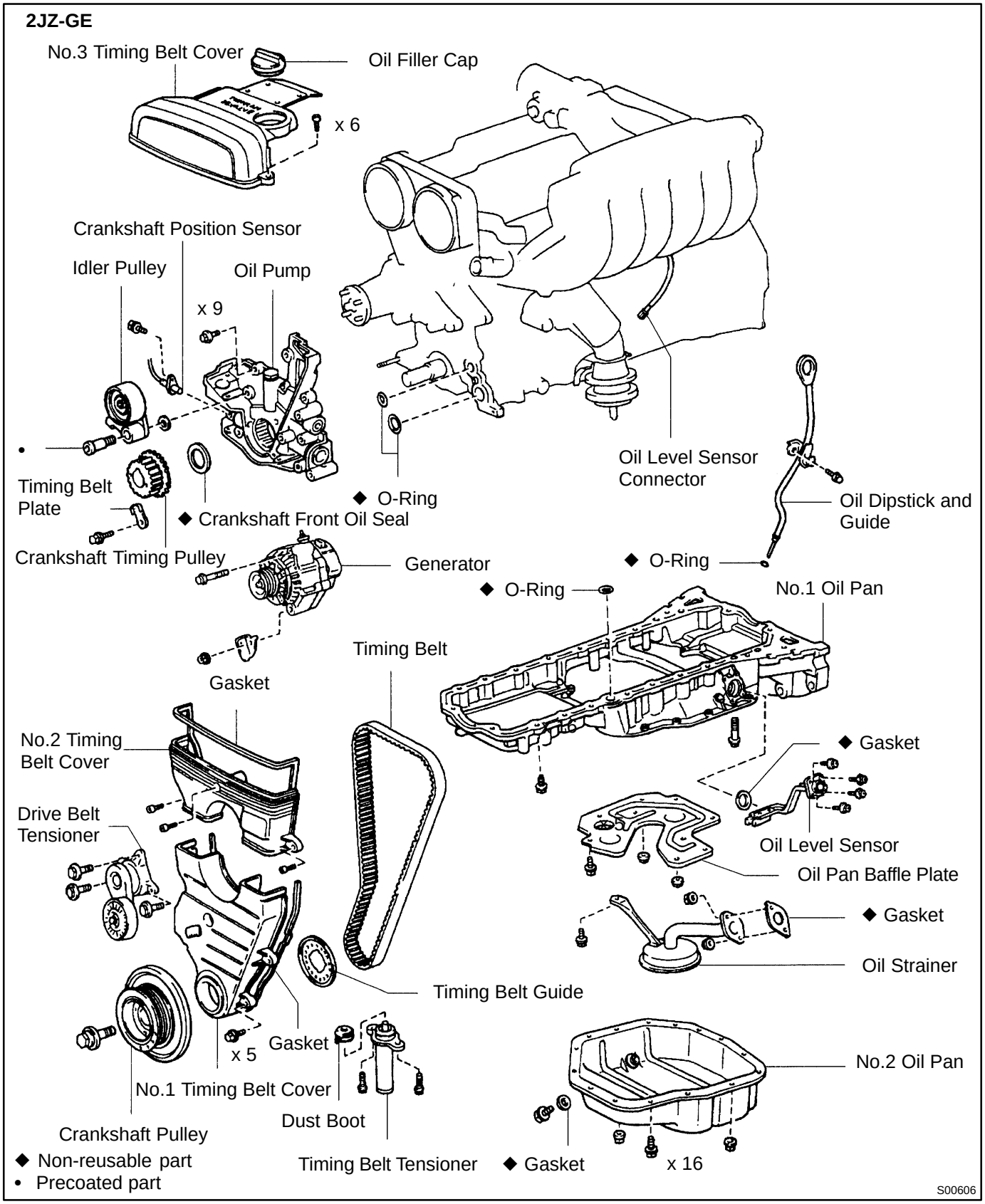

2JZ-GTE

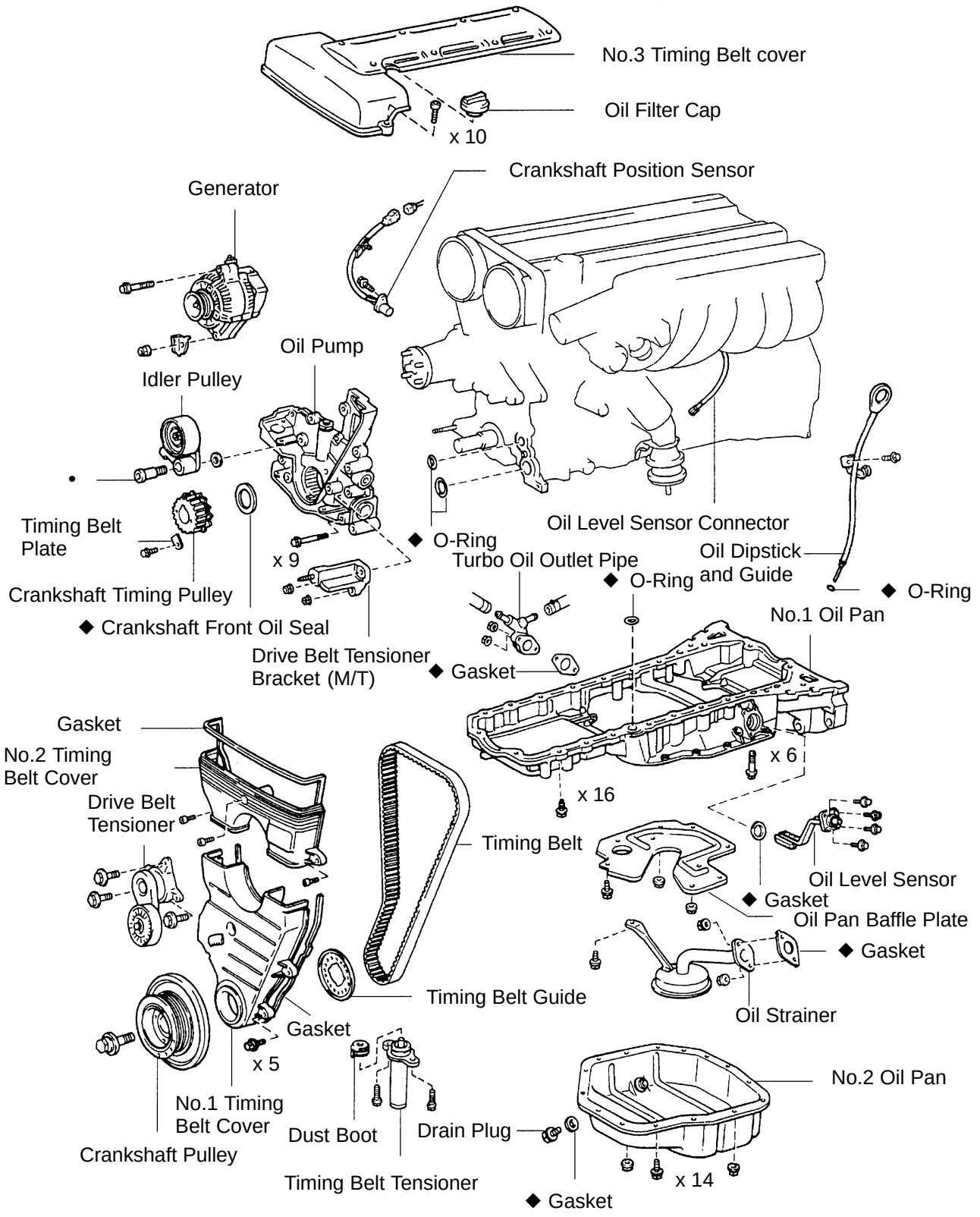

◆Non-reusable part
• Precoated part

S00866

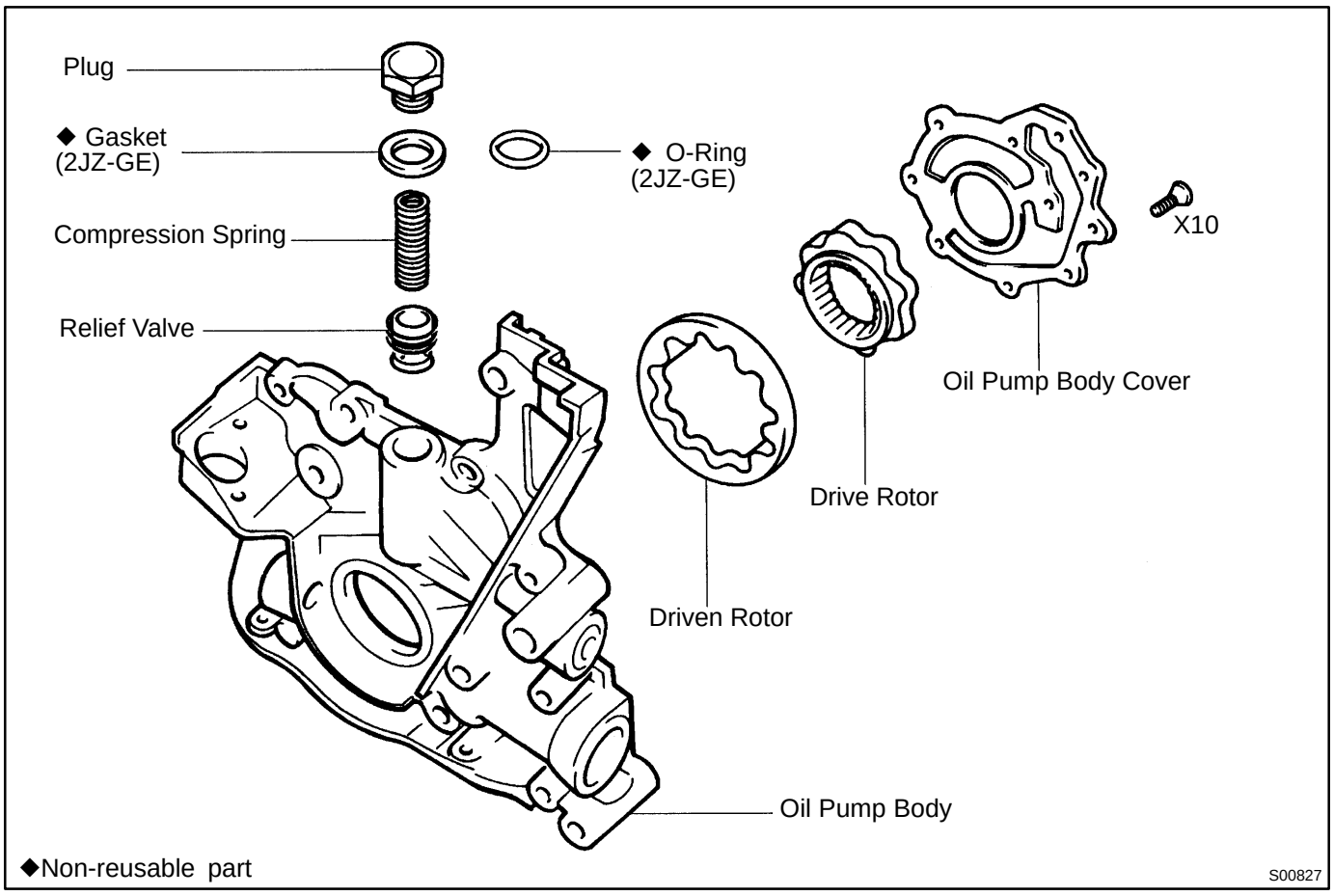
Plug
◆ Gasket
(2JZ-GE)
◆ O-Ring
(2JZ-GE)
Compression Spring
Relief Valve
X10
Oil Pump Body Cover
Drive Rotor
Driven Rotor
Oil Pump Body
◆Non-reusable part
S00827

LU0K0-01

REMOVAL

HINT:

When repairing the oil pump, the oil pan and strainer should be removed and cleaned.

1. REMOVE ENGINE WITH TRANSMISSION
(2JZ-GE: See page EM-57)
(2JZ-GTE: See page EM-58)

2. SEPARATE ENGINE AND TRANSMISSION
(2JZ-GE: See page AT-20)
(2JZ-GTE: See page EM-58)

3. INSTALL ENGINE TO ENGINE STAND FOR REMOVAL

4. REMOVE GENERATOR (See page CH-8)

5. REMOVE CRANKSHAFT POSITION SENSOR

(a) Disconnect the sensor connector from the clamp bracket.

(b) Disconnect the sensor connector from the wiring connector.

(c) 2JZ-GTE:
Disconnect the wire clamp from the cylinder block.

(d) Remove the bolt and position sensor.

6. REMOVE TIMING BELT
(2JZ-GE: See page EM-13)
(2JZ-GTE: See page EM-15)

7. 2JZ-GTE M/T:
REMOVE DRIVE BELT TENSIONER BRACKET

Remove the 2 nuts and tensioner bracket.

8. REMOVE IDLER PULLEY AND CRANKSHAFT TIMING PULLEY
(2JZ-GE: See page EM-13)
(2JZ-GTE: See page EM-15)

9. REMOVE OIL DIPSTICK AND GUIDE

(a) Remove the bolt.

(b) Pull out the dipstick guide together with the dipstick.

(c) Remove the O-ring from the dipstick guide.

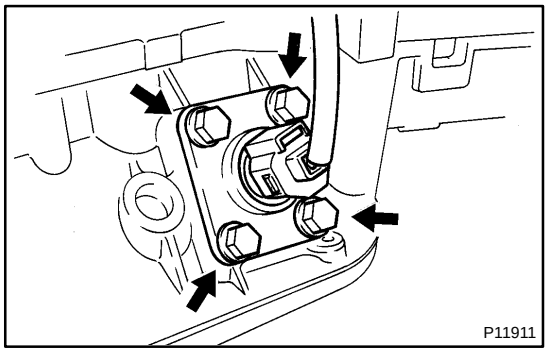

10. REMOVE OIL LEVEL SENSOR

(a) Disconnect the level sensor connector.

(b) Remove the 4 bolts and level sensor.

(c) Remove the gasket from the level sensor.

NOTICE:

Be careful not to drop the oil level sensor when removing it.

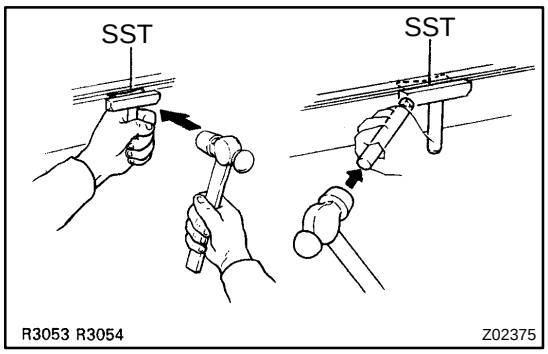

11. REMOVE NO.2 OIL PAN

(a) Remove the 14 bolts and 2 nuts.

(b) Insert the blade of SST between the No.1 and No.2 oil pan, break the seal of the applied sealer and remove the No.2 oil pan.
SST 09032-00100

NOTICE:

- **Be careful not to damage the No.2 oil pan contact surface of the No.1 oil pan.**
- **Be careful not to damage the oil pan flange.**

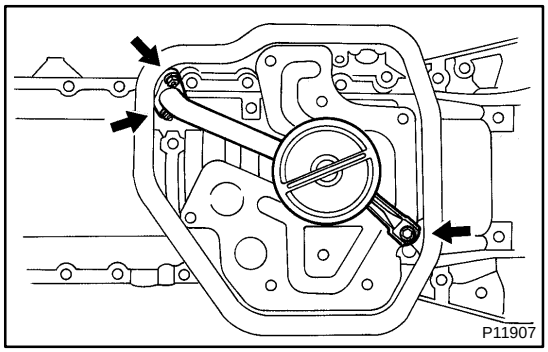

12. REMOVE OIL STRAINER

Remove the bolt, 2 nuts, oil strainer and gasket.

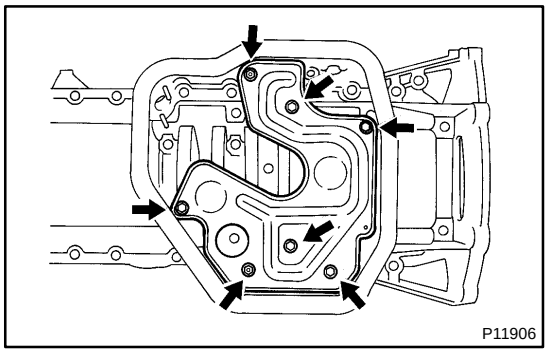

13. REMOVE OIL PAN BAFFLE PLATE

Remove the 5 bolts, 2 nuts and baffle plate.

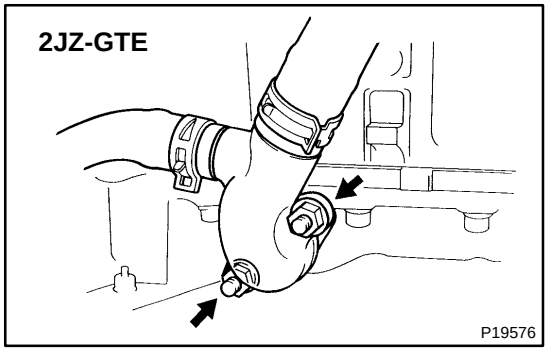

14. 2JZ-GTE:
REMOVE TURBO OIL OUTLET PIPE

(a) Disconnect the 2 turbo oil outlet hoses.

(b) Remove the 2 nuts, oil outlet pipe and gasket.

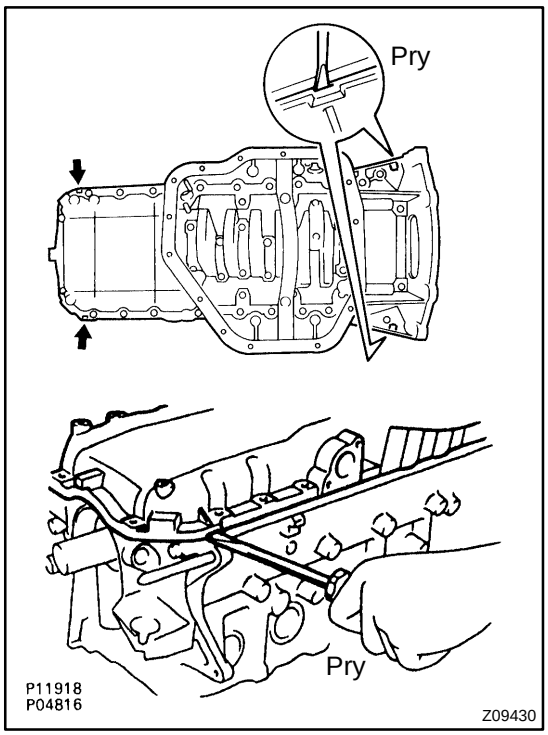

15. REMOVE NO.1 OIL PAN

(a) Remove the 22 bolts.

(b) Remove the No.1 oil pan by prying the portions between the cylinder block and No.1 oil pan with a screwdriver.

NOTICE:

Be careful not to damage the contact surfaces of the cylinder block and No.1 oil pan.

(c) Remove the O-ring from the cylinder block.

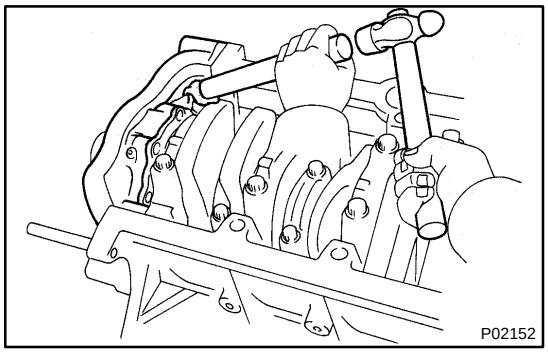

16. REMOVE OIL PUMP

(a) Remove the 9 bolts.

(b) Using a hammer and brass bar, remove the oil pump by carefully tapping the oil pump body.

(c) Remove the 2 O-rings from the cylinder block.

LU0K1-01

DISASSEMBLY

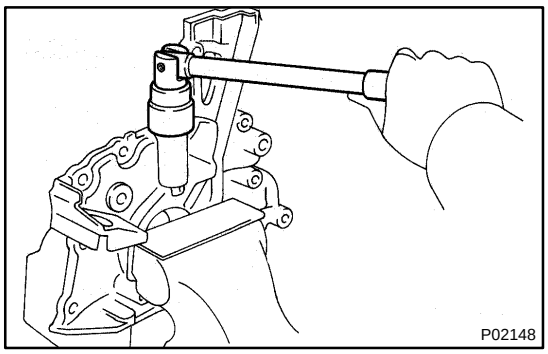

1. REMOVE RELIEF VALVE

(a) Slightly mount the pump body in a vise.

NOTICE:

Be careful not to damage the pump body.

(b) Remove the plug, gasket (2JZ-GE), O-ring (2JZ-GTE), compression spring and relief valve.

HINT:

At the time of reassembly, please refer to the following items.

Use a new gasket (2JZ-GE) or O-ring (2JZ-GTE).

Torque:

2JZ-GE: 49 N·m (500 kgf·cm, 36 ft·lbf)

2JZ-GTE: 29 N·m (300 kgf·cm, 22 ft·lbf)

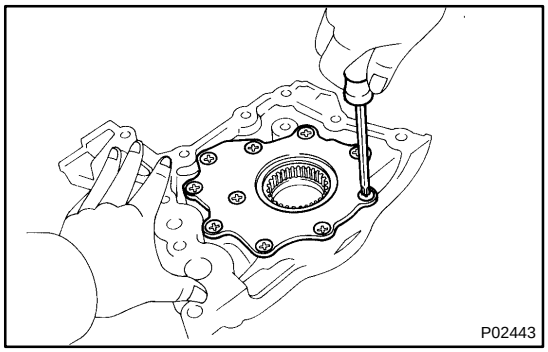

2. REMOVE DRIVE AND DRIVEN ROTORS

Remove the 10 screws, pump body cover, the drive and driven rotors.

Torque: 10 N·m (105 kgf·cm, 8.0 ft·lbf)

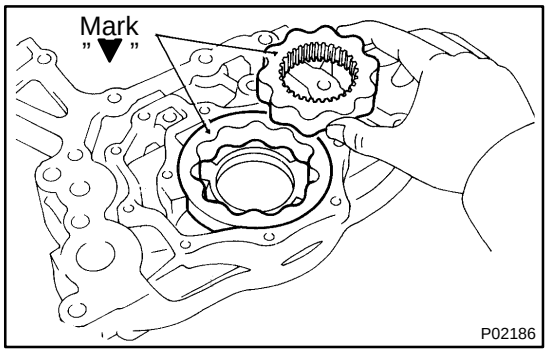

HINT:

At the time of reassembly, please refer to the following item.

Place the drive and driven rotors into the oil pump body with the mark facing upward.

LU04X-02

INSPECTION

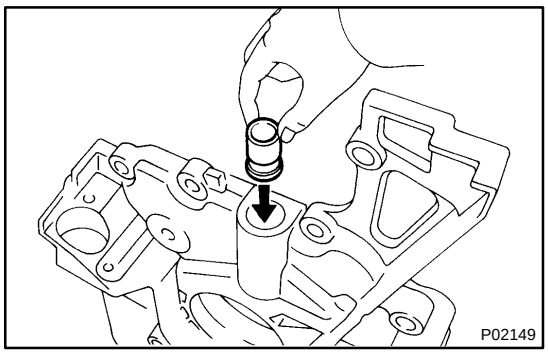

1. INSPECT RELIEF VALVE

Coat the valve with engine oil and check that it falls smoothly into the valve hole under its own weight.

If it doesn't, replace the relief valve. If necessary, replace the oil pump assembly.

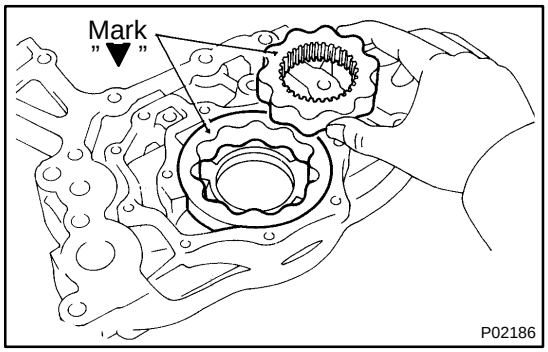

2. PLACE DRIVE AND DRIVEN ROTORS INTO OIL PUMP BODY

(a) Place drive and driven rotors into oil pump body

HINT:

Place the drive and driven rotors into the oil pump body with the mark facing upward.

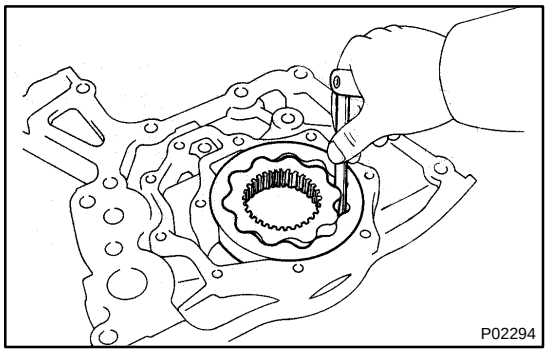

3. INSPECT ROTOR TIP CLEARANCE

Using a feeler gauge, measure the clearance between the drive and driven rotors.

Standard tip clearance:
2JZ-GE: 0.060 - 0.240 mm (0.0024 - 0.0094 in.)
2JZ-GTE: 0.056 - 0.326 mm (0.0022 - 0.0128 in.)
Maximum tip clearance:
2JZ-GE: 0.30 mm (0.0118 in.)
2JZ-GTE: 0.40 mm (0.0157 in.)

If the tip clearance is greater than maximum, replace the rotors as a set.

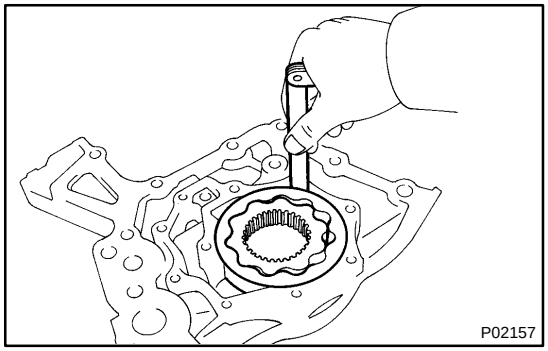

4. INSPECT ROTOR BODY CLEARANCE

Using a feeler gauge, measure the clearance between the driven rotor and pump body.

Standard body clearance:
2JZ-GE: 0.100 - 0.175 mm (0.0039 - 0.0069 in.)
2JZ-GTE: 0.080 - 0.135 mm (0.0031 - 0.0053 in.)
Maximum body clearance:
2JZ-GE: 0.20 mm (0.0079 in.)
2JZ-GTE: 0.16 mm (0.0063 in.)

If the body clearance is greater than maximum, replace the rotors as a set. If necessary, replace the oil pump assembly.

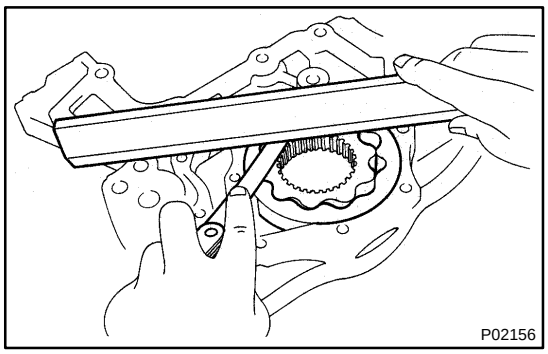

5. INSPECT ROTOR SIDE CLEARANCE

Using a feeler gauge and precision straight edge, measure the clearance between the rotors and precision straight edge.

Standard side clearance:
2JZ-GE: 0.030 - 0.090 mm (0.0012 - 0.0035 in.)
2JZ-GTE: 0.020 - 0.065 mm (0.0007 - 0.0026 in.)
Maximum side clearance:
2JZ-GE: 0.12 mm (0.0047 in.)
2JZ-GTE: 0.10 mm (0.0039 in.)

If the side clearance is greater than maximum, replace the rotors as a set. If necessary, replace the oil pump assembly.

6. REMOVE DRIVE AND DRIVEN ROTORS

LU050-02

INSTALLATION

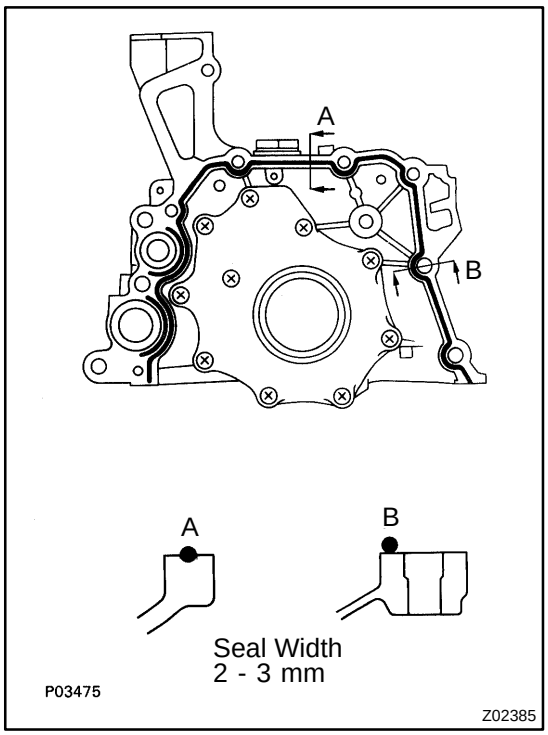

1. INSTALL OIL PUMP

(a) Remove any old packing (FIPG) material and be careful not to drop any oil on the contact surfaces of the oil pump and cylinder block.

- Using a razor blade gasket scraper, remove all the old packing (FIPG) material from the gasket surfaces and sealing groove.
- Thoroughly clean all components to remove all the debris.
- Using a non-residue solvent, clean both sealing surfaces.

(b) Apply seal packing to the oil pump as shown in the illustration.

Seal packing:

Part No. 08826-00080 or equivalent

- Install a nozzle that has been cut to a 2 - 3 mm (0.08 - 0.12 in.) opening.

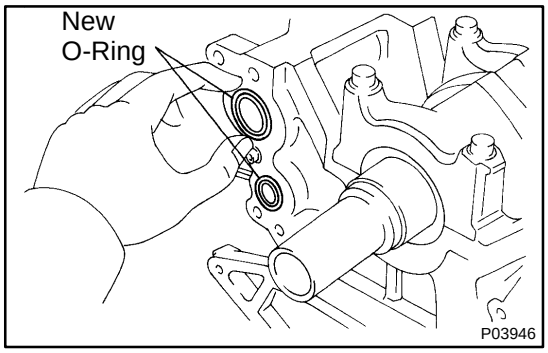

HINT:

Avoid applying an excessive amount to the surface. Be particularly careful near oil passages.

- Parts must be assembled within 5 minutes of application. Otherwise the material must be removed and reapplied.
- Immediately remove nozzle from the tube and reinstall cap.

(c) Place 2 new O-rings in position on the cylinder block.

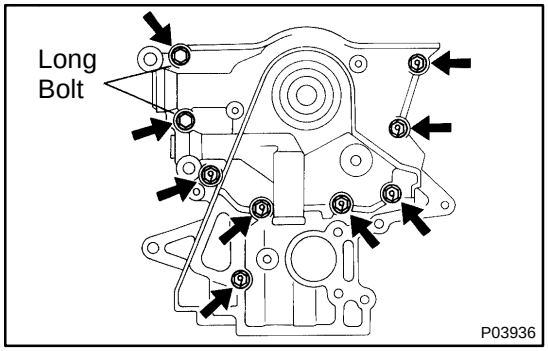

(d) Install the oil pump with the 9 bolts.

Torque: 21 N·m (210 kgf·cm, 15 ft·lbf)

2. INSTALL NO.1 OIL PAN

(a) Remove any old packing (FIPG) material and be careful not to drop any oil on the contact surfaces of the No.1 oil pan and cylinder block.

- Using a razor blade and gasket scraper, remove all the old packing (FIPG) material from the gasket surfaces and sealing groove.
- Thoroughly clean all components to remove all the debris.
- Using a non-residue solvent, clean both sealing surfaces.

NOTICE:

Do not use a solvent which will affect the painted surfaces.

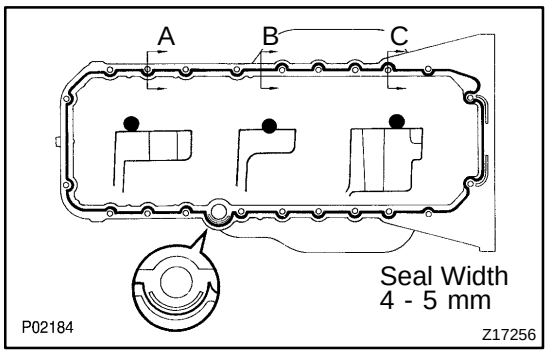

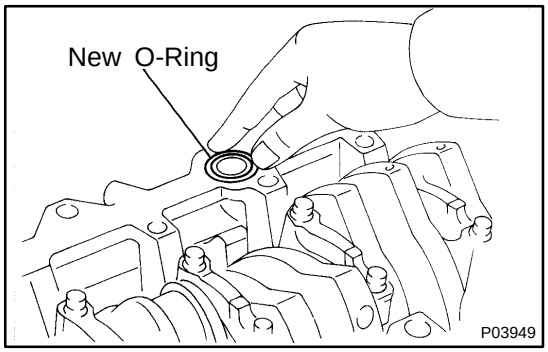

(b) Apply seal packing to the No.1 oil pan as shown in the illustration.
Seal packing:
Parts No. 08826-00080 or equivalent
- Install a nozzle that has been cut to a 4 - 5 mm (0.16 - 0.20 in.) opening.

HINT:
Avoid applying an excessive amount to the surface.
- Parts must be assembled within 5 minutes of application. Otherwise the material must be removed and reapplied.
- Immediately remove nozzle from the tube and reinstall cap.

(c) Place a new O-ring in the position on the cylinder block.
(d) Install the No.1 oil pan with the 22 bolts.
Torque:
12 mm head
21 N·m (210 kgf·cm, 15 ft·lbf)
14 mm head
39 N·m (400 kgf·cm, 29 ft·lbf)

3. 2JZ-GTE
INSTALL TURBO OIL OUTLET PIPE
(a) Install a new gasket and the oil outlet pipe with the 2 nuts.
Torque: 27 N·m (280 kgf·cm, 20 ft·lbf)
(b) Connect the 2 turbo oil outlet hoses.

4. INSTALL OIL PAN BAFFLE PLATE
Torque: 8.8 N·m (90 kgf·cm, 78 in.·lbf)

5. INSTALL OIL STRAINER
Install a new gasket and the oil strainer with the bolt and 2 nuts.
Torque: 8.8 N·m (90 kgf·cm, 78 in.·lbf)

6. INSTALL NO.2 OIL PAN
(a) Remove any old packing (FIPG) material and be careful not to drop any oil on the contact surfaces of the No.1 and No.2 oil pans.
- Using a razor blade and gasket scraper, remove all the old packing (FIPG) material from the gasket surfaces and sealing groove.
- Thoroughly clean all components to remove all the debris.
- Using a non-residue solvent, clean both sealing surfaces.

NOTICE:
Do not use a solvent which will affect the painted surfaces.

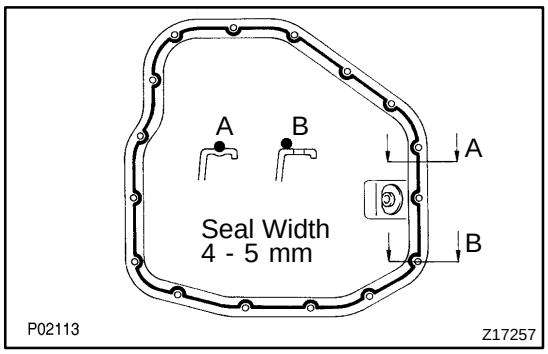

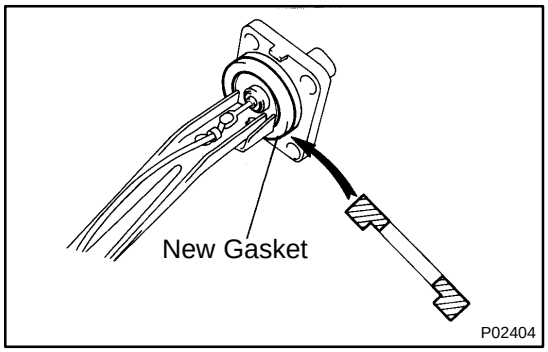

(b) Apply seal packing to the No.2 oil pan as shown in the illustration.
Seal packing:
Part No. 08826-00080 or equivalent
- Install a nozzle that has been cut to a 4 - 5 mm (0.16 - 0.20 in.) opening.

HINT:
Avoid applying an excessive amount to the surface.
- Parts must be assembled within 5 minutes of application. Otherwise the material must be removed and reapplied.
- Immediately remove nozzle from the tube and reinstall cap.

(c) Install the No.2 oil pan with the 14 bolts and 2 nuts.
Torque: 8.8 N·m (90 kgf·cm, 78 in.·lbf)

7. INSTALL OIL LEVEL SENSOR
(a) Install a new gasket to the level sensor.
(b) Install the level sensor with the 4 bolts.
Torque: 5.4 N·m (55 kgf·cm, 48 in.·lbf)
(c) Connect the level sensor connector.

8. INSTALL OIL DIPSTICK GUIDE AND DIPSTICK
(a) Install a new O-ring on the dipstick guide.
(b) Apply new oil to the O-ring.
(c) Connect the dipstick guide end to the dipstick tube of the oil pan.
(d) Install the dipstick guide with the bolt.
(e) Install the dipstick.

9. INSTALL CRANKSHAFT TIMING PULLEY AND IDLER PULLEY
(2JZ-GE: See page EM-19)
(2JZ-GTE: See page EM-21)

10. 2JZ-GTE M/T:
INSTALL DRIVE BELT TENSIONER BRACKET
Torque: 27 N·m (280 kgf·cm, 20 ft·lbf)

11. INSTALL TIMING BELT
(2JZ-GE: See page EM-19)
(2JZ-GTE: See page EM-21)

12. INSTALL CRANKSHAFT POSITION SENSOR
Torque: 9.0 N·m (90 kgf·cm, 80 in.·lbf)

13. INSTALL GENERATOR (See page CH-18)

14. REMOVE ENGINE STAND FROM ENGINE

15. ASSEMBLY ENGINE AND TRANSMISSION
(2LZ-GE: See page AT-24)
(2JZ-GTE: See page EM-65)

16. INSTALL ENGINE WITH TRANSMISSION
(2JZ-GE: See page EM-57)
(2JZ-GTE: See page EM-65)

OIL COOLER (2JZ-GTE)

COMPONENTS

LU04Q-01

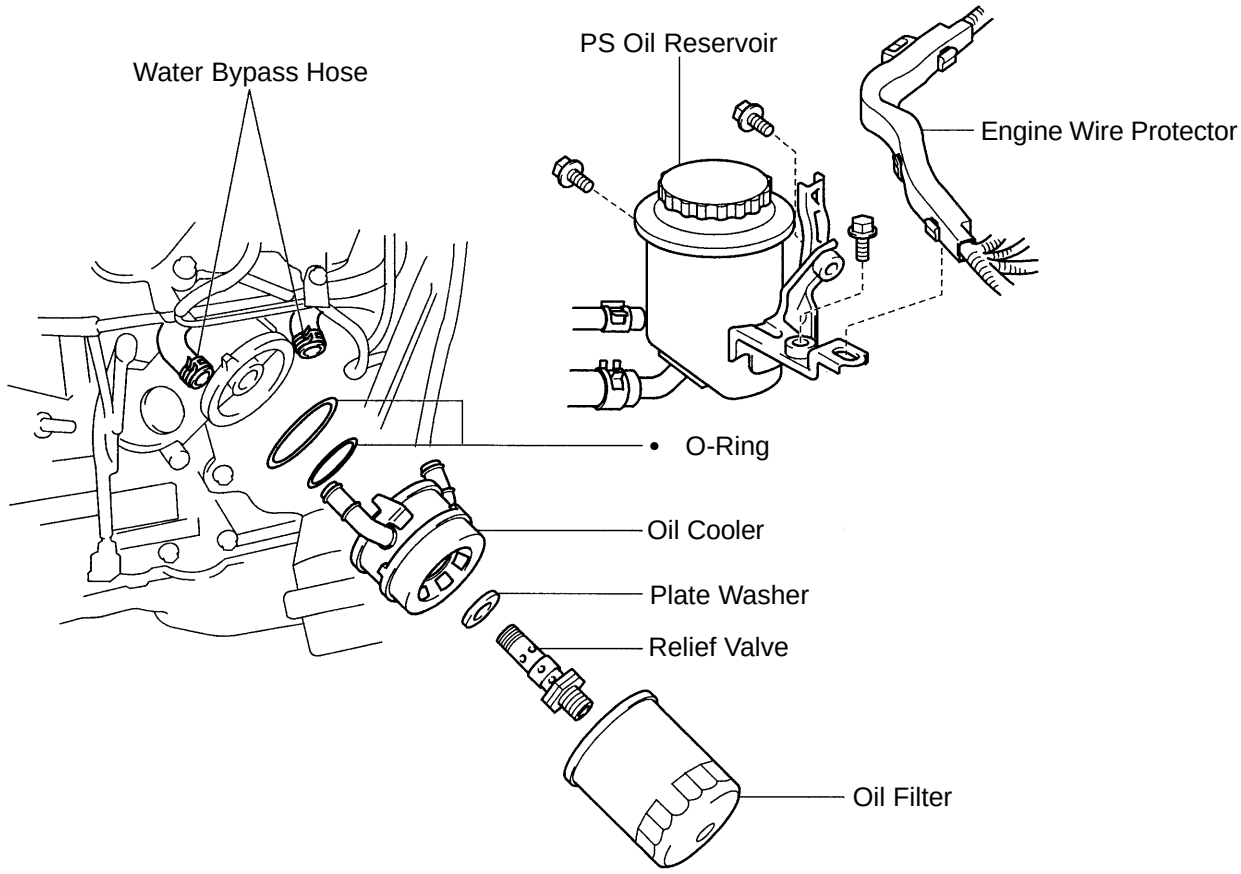

• Non-reusable part

B02884

LU04R-01

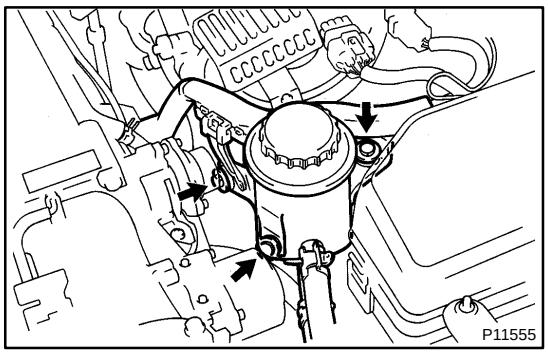

REMOVAL

1. DISCONNECT PS OIL RESERVOIR WITHOUT DISCONNECTING HOSES

(a) Disconnect the 2 clamps of the engine wire protector from the bracket.

(b) Remove the 3 bolts and disconnect the reservoir.

2. DRAIN ENGINE COOLANT

3. REMOVE OIL FILTER

(See page LU-4)

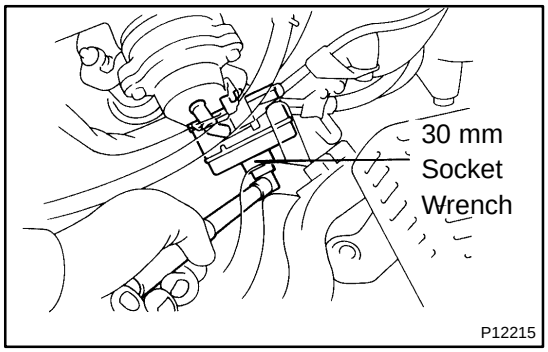

4. DISCONNECT WATER BYPASS HOSES FROM OIL COOLER

5. REMOVE OIL COOLER

(a) Remove the relief valve, plate washer and oil cooler.

(b) Remove the 2 O-rings from the oil cooler.

LU04S-01

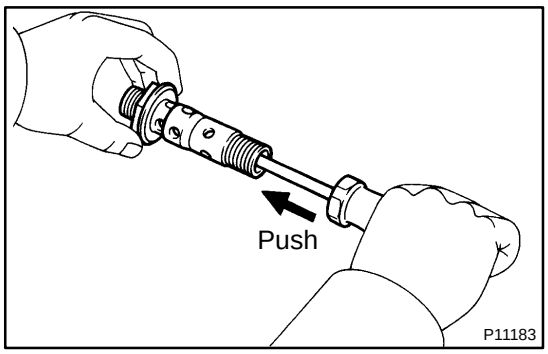

INSPECTION

1. INSPECT RELIEF VALVE

Push the valve with a wooden stick to check if it is stuck.
If stuck, replace the relief valve.

2. INSPECT OIL COOLER

Check the oil cooler for damage or clogging.
If necessary, replace the oil cooler.

LU04T-02

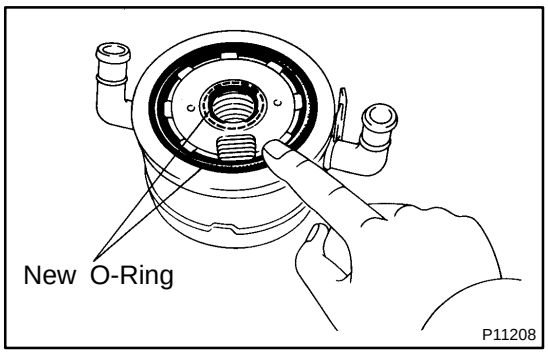

INSTALLATION

1. INSTALL OIL COOLER

(a) Install 2 new O-rings to the oil cooler.

(b) Apply a light coat of engine oil on the threads and under the head of the relief valve.

(c) Temporarily install the oil cooler with the plate washer and relief valve.

(d) Tighten the relief valve.
Torque: 78 N·m (800 kgf·cm, 58 ft·lbf)

2. CONNECT WATER BYPASS HOSES TO OIL COOLER

3. CONNECT PS OIL RESERVOIR

4. INSTALL OIL FILTER

5. FILL WITH ENGINE COOLANT

6. START ENGINE AND CHECK FOR LEAKS

7. CHECK ENGINE OIL LEVEL

OIL NOZZLE (2JZ-GTE)

LU051-01

COMPONENTS

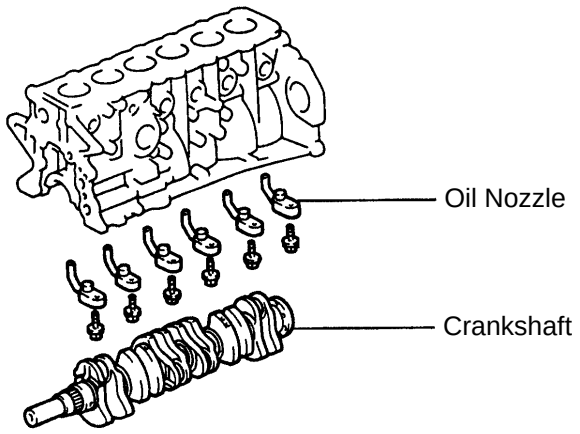

P12218 Z13338

LU052-01

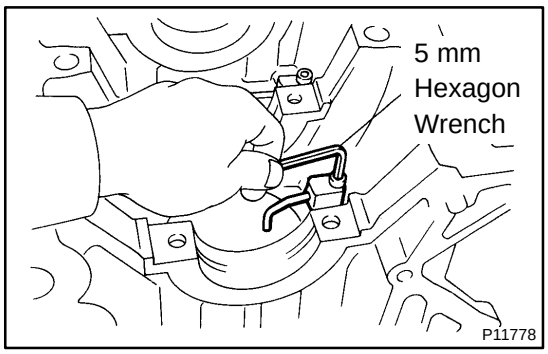

REMOVAL

1. REMOVE CRANKSHAFT
(See page EM-71)

2. REMOVE OIL NOZZLES (WITH RELIEF VALVES)

Using a 5 mm hexagon wrench, remove the bolt and oil nozzle. Remove the 6 oil nozzles.

LU053-01

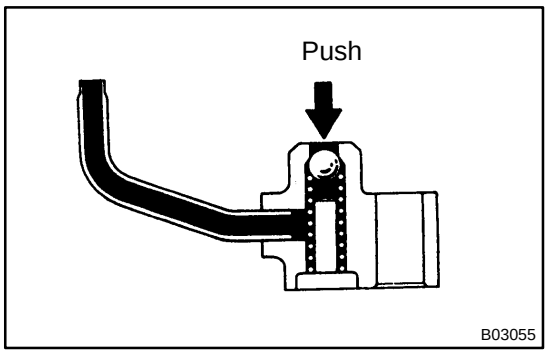

INSPECTION

INSPECT RELIEF VALVES (OIL NOZZLES)

Push the valve with a wooden stick to check if it is stuck.
If stuck, replace the relief valve.

LU054-01

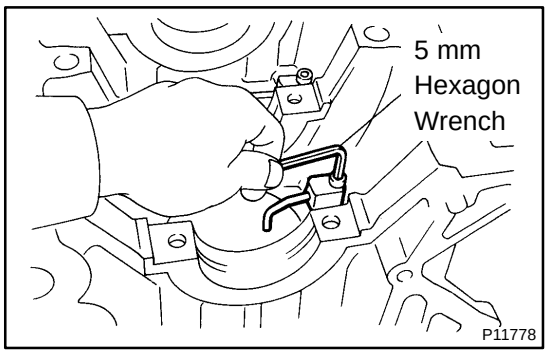

INSTALLATION

1. INSTALL OIL NOZZLES (WITH RELIEF VALVES)

Using a 5 mm hexagon wrench, install the oil nozzle with the bolt. Install the 6 oil nozzles.

Torque: 9.0 N·m (90 kgf·cm, 80 in.·lbf)

2. INSTALL CRANKSHAFT

(See page EM-88)

PP0QE-01

RECOMMENDED TOOLS

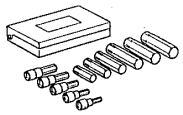	09040-00010	Hexagon Wrench Set .	
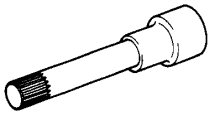	09043-50100	Bi-hexagon Wrench 10 mm .	Cylinder head bolt
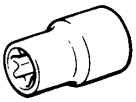	09044-00020	Torx Socket E10 .	A/C compressor stud bolt
	09090-04020	Engine Sling Device	For suspending engine
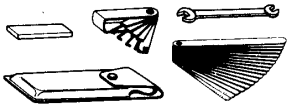	09200-00010	Engine Adjust Kit .	
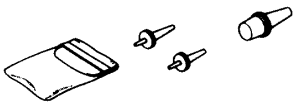	09258-00030	Hose Plug Set .	

EM0AD-02

REMOVAL

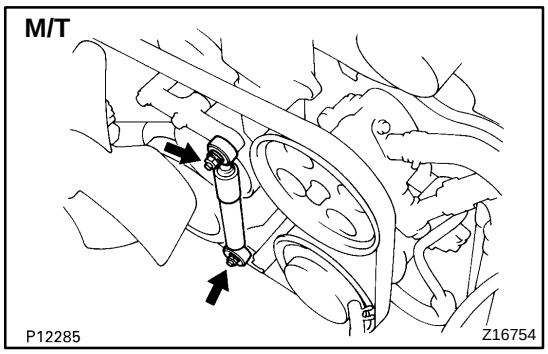

1. REMOVE RADIATOR ASSEMBLY
(See page CO-22)

2. M/T:
REMOVE DRIVE BELT TENSIONER DAMPER

Remove the 2 nuts and tensioner damper.

3. REMOVE DRIVE BELT, FAN, FLUID COUPLING ASSEMBLY AND WATER PUMP PULLEY
(See page CO-7)

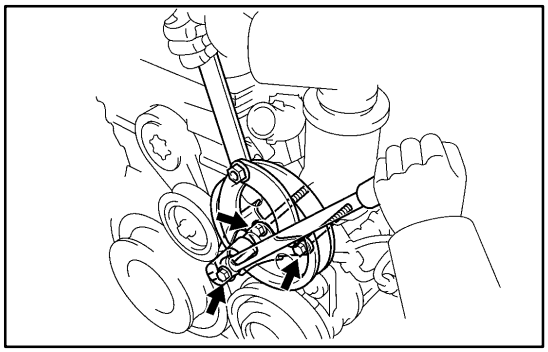

4. REMOVE PS PUMP PULLEY

Using SST, remove the nut and pump pulley.

SST 09960-10010 (09962-01000, 09963-01000)

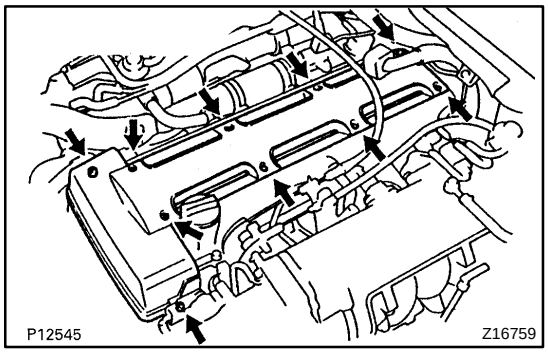

5. REMOVE NO.3 TIMING BELT COVER

(a) Remove the oil filler cap.

(b) Using a 5 mm hexagon wrench, remove the 10 bolts and belt cover

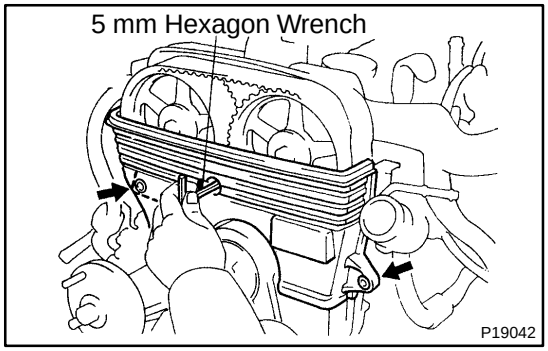

6. REMOVE NO.2 TIMING BELT COVER

Using a 5 mm hexagon wrench, remove the 3 bolts, belt cover and gasket.

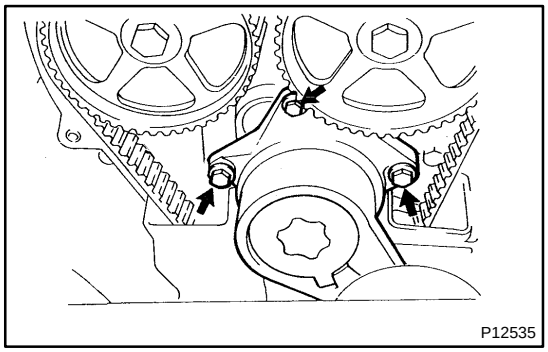

7. REMOVE DRIVE BELT TENSIONER

Remove the 3 bolts and tensioner.

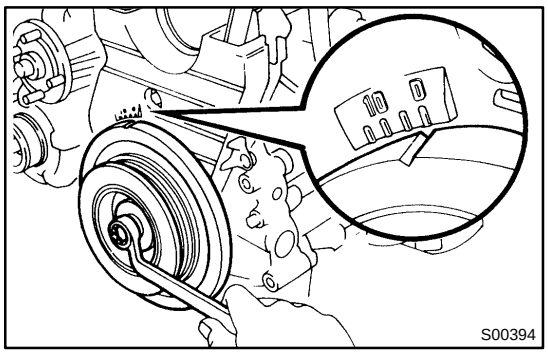

8. SET NO.1 CYLINDER TO TDC/COMPRESSION

(a) Turn the crankshaft pulley, and align its groove with timing mark ”0” of the No.1 timing belt cover.

NOTICE:

Always turn the crankshaft clockwise.

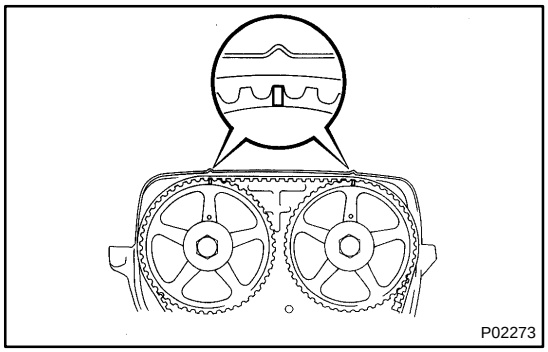

(b) Check that the timing marks of the camshaft timing pulleys are aligned with the timing marks of the No.4 timing belt cover.

If not, turn the crankshaft 1 revolution (360˚).

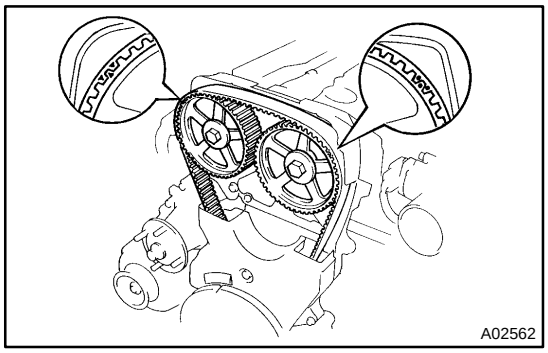

9. REMOVE TIMING BELT FROM CAMSHAFT TIMING PULLEYS

HINT:

(Re-using timing belt):

Place matchmarks on the timing belt and camshaft timing pulleys as shown in the illustration.

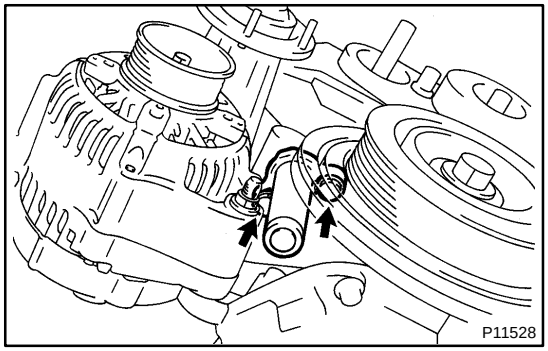

(a) Alternately loosen the 2 bolts, and remove them, the tensioner and dust boot.

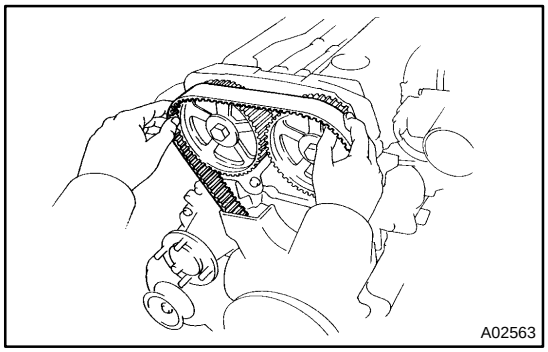

(b) Disconnect the timing belt from the camshaft timing pulleys.

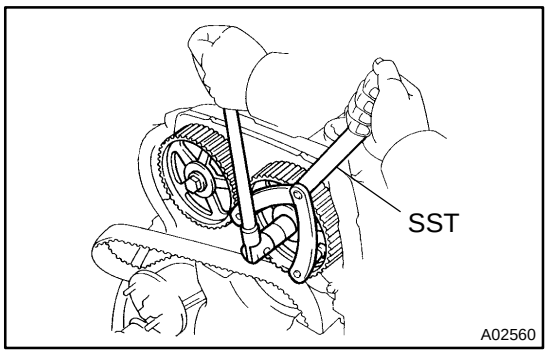

10. REMOVE CAMSHAFT TIMING PULLEYS

Using SST, remove the pulley bolt. Remove the 2 timing pulleys.

SST 09960-10010 (09962-01000, 09963-01000)

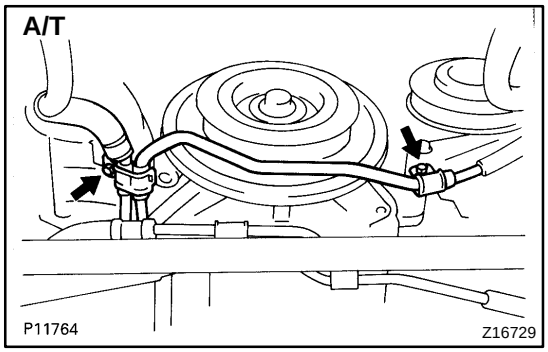

11. A/T:
DISCONNECT OIL COOLER TUBES

Remove the 2 bolts and hose clamps, and disconnect oil cooler tubes.

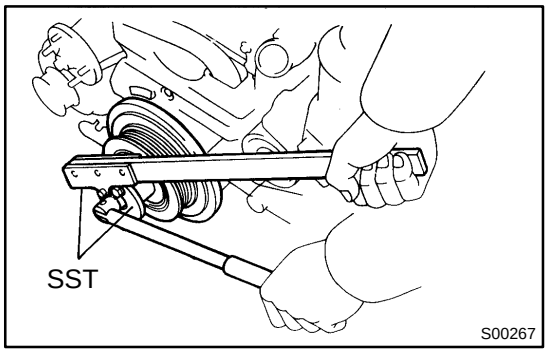

12. REMOVE CRANKSHAFT PULLEY

(a) Using SST, loosen the pulley bolt.
SST 09213-70010, 09330-00021

(b) Remove the pulley bolt.

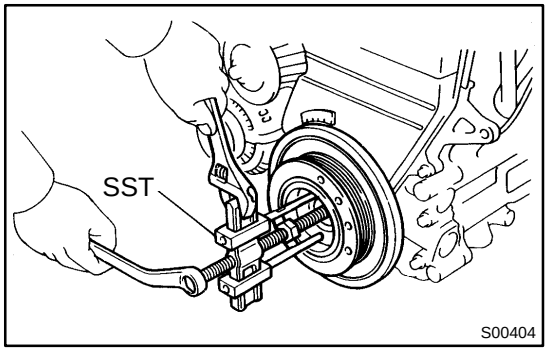

(c) Using SST, remove the pulley.
SST 09950-50010 (09951-05010, 09952-05010, 09953-05010, 09953-05020, 09954-05030)

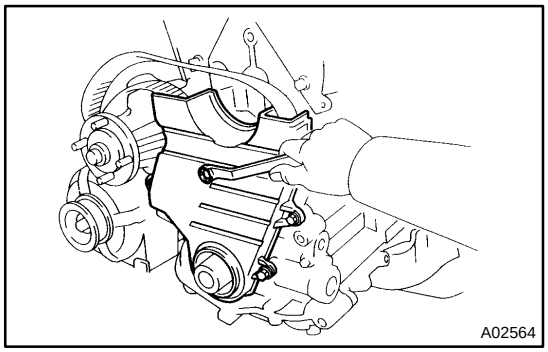

13. REMOVE NO.1 TIMING BELT COVER

Remove the 5 bolts, timing belt cover and gasket.

14. REMOVE TIMING BELT GUIDE

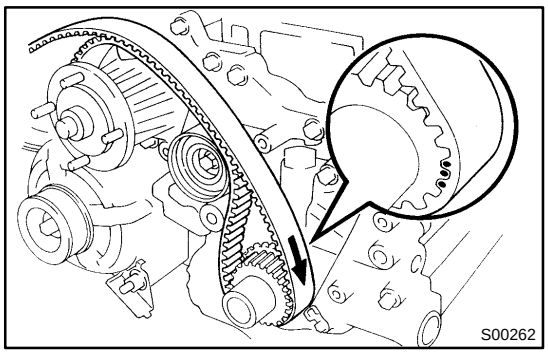

15. REMOVE TIMING BELT

HINT:

(When re-using timing belt):

Draw an arrow on the timing belt in the direction of engine revolution, and place matchmarks on the timing belt and crankshaft timing pulley.

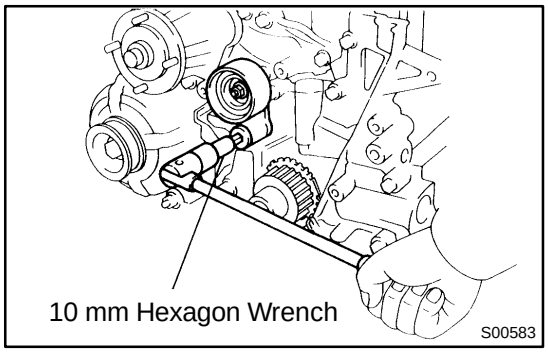

16. REMOVE IDLER PULLEY

Using a 10 mm hexagon wrench, remove the pivot bolt, plate washer and idler pulley.

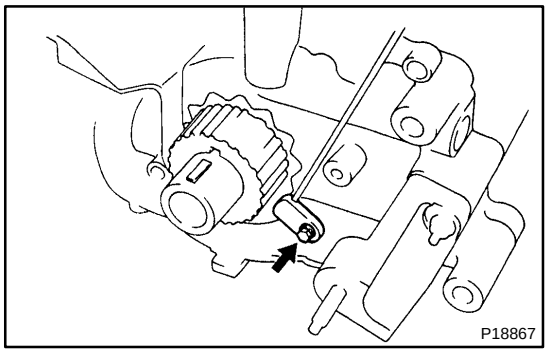

17. REMOVE CRANKSHAFT TIMING PULLEY

(a) Remove the bolt and timing belt plate.

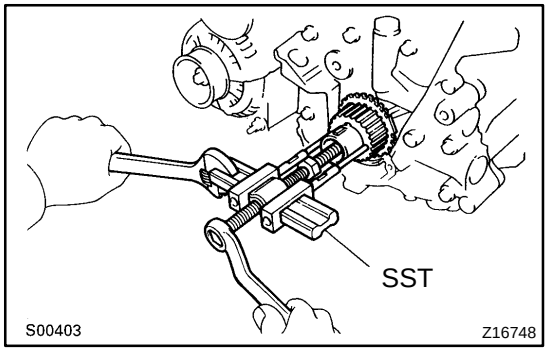

(b) Remove the crankshaft timing pulley.

If the pulley cannot be removed by hand, use SST to remove the crankshaft timing pulley.

SST 09950-50010 (09951-05010, 09952-05010, 09953-05010, 09953-05020, 09954-05010)

NOTICE:

Do not scratch the sensor part the crankshaft timing pulley.

EM1DY-01

REMOVAL

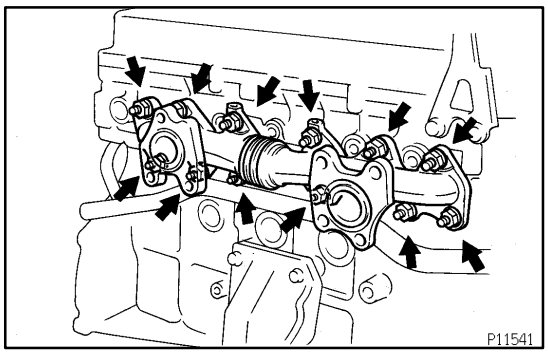

1. REMOVE TURBOCHARGER
(See page TC-10)

2. REMOVE EXHAUST MANIFOLD

Remove the 12 nuts, exhaust manifold and 2 gaskets.

3. M/T:
REMOVE DRIVE BELT TENSIONER DAMPER
(See page EM-15)

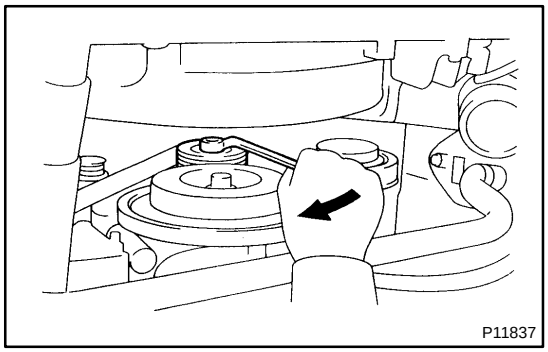

4. REMOVE DRIVE BELT

Loosen the drive belt tension by turning the drive belt tensioner clockwise, and remove the drive belt.

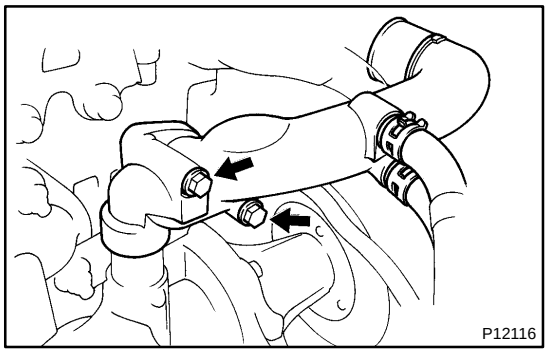

5. REMOVE WATER OUTLET AND NO.1 WATER BYPASS PIPE

(a) Disconnect the upper radiator hose from the water outlet.
(b) Disconnect the ECT sensor and sender gauge connectors.
(c) Remove the 2 bolts, water outlet and gasket.
(d) Remove the No.1 water bypass pipe and 2 O-rings.

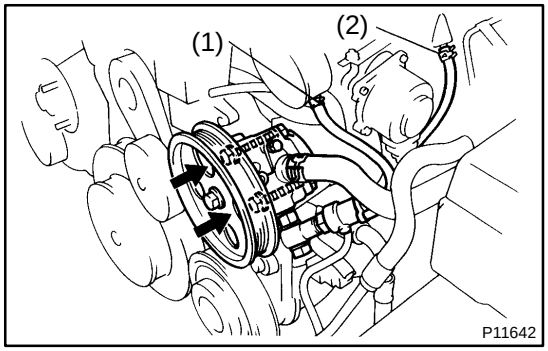

6. DISCONNECT PS PUMP WITHOUT DISCONNECTING HOSES

(a) Disconnect these hoses:
  (1) PS air hose from throttle body
  (2) PS air hose from air intake chamber
(b) Remove the 2 bolts, and disconnect the vane pump from the pump bracket.

HINT:
Put aside the vane pump, and suspend it.

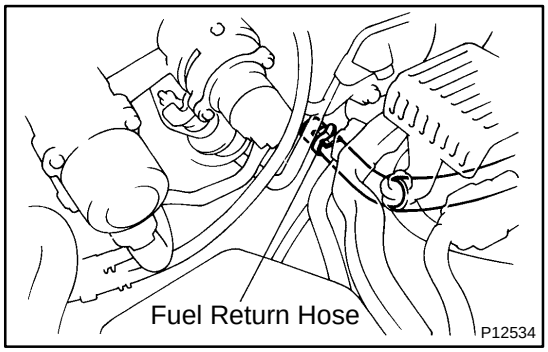

7. DISCONNECT FUEL RETURN HOSE

Disconnect the fuel return hose from the fuel return pipe. Plug the hose end.

8. REMOVE AIR INTAKE CHAMBER ASSEMBLY
(See page SF-20)

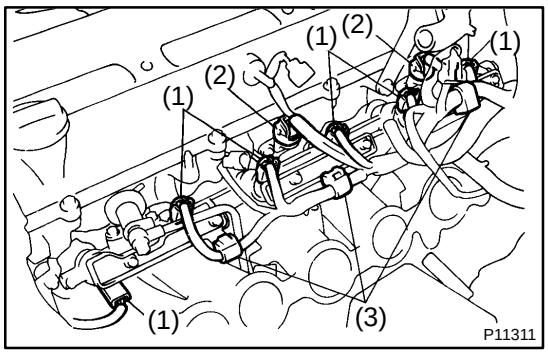

9. DISCONNECT ENGINE WIRE

(a) Disconnect these connectors and clamps:
- (1) 6 injectors connectors
- (2) 2 camshaft position sensor connectors
- (3) 3 engine wire clamps from injector holders
- (4) VSV connector for EVAP

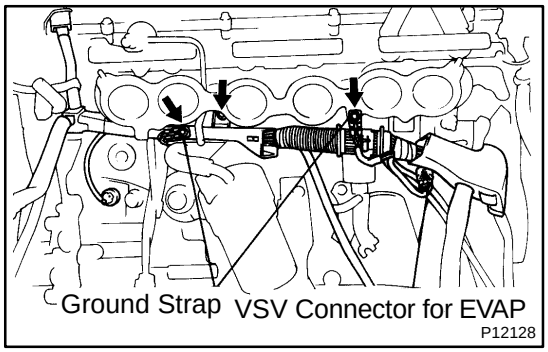

(b) Remove the 2 bolts, and disconnect the 2 ground straps from the intake manifold.

(c) Remove the nut, and disconnect the engine wire protector from the intake manifold.

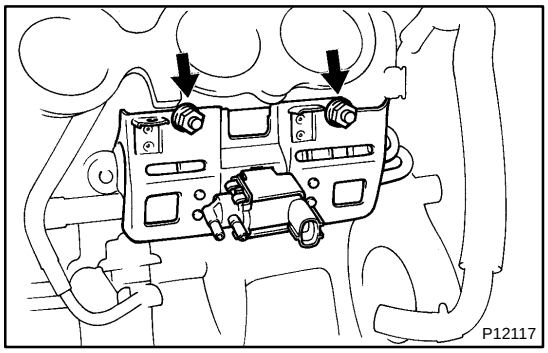

10. REMOVE PRESSURE TANK AND VSV ASSEMBLY

(a) Disconnect the 2 vacuum hoses from the pressure tank.

(b) Remove the 2 nuts and pressure tank and VSV assembly.

11. REMOVE FUEL PRESSURE PULSATION DAMPER
(See page SF-31)

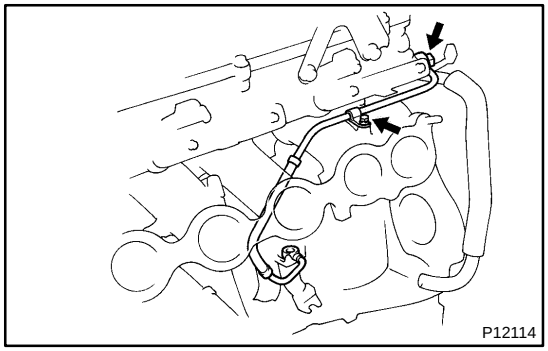

12. REMOVE FUEL INLET PIPE

Remove the union bolt, 2 gaskets, clamp bolt and fuel inlet pipe.

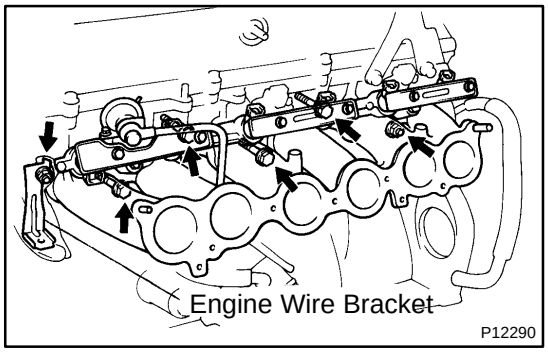

13. REMOVE INTAKE MANIFOLD AND DELIVERY PIPE ASSEMBLY

Remove the 4 bolts, 2 nuts, engine wire bracket, the intake manifold, delivery pipe assembly and gasket.

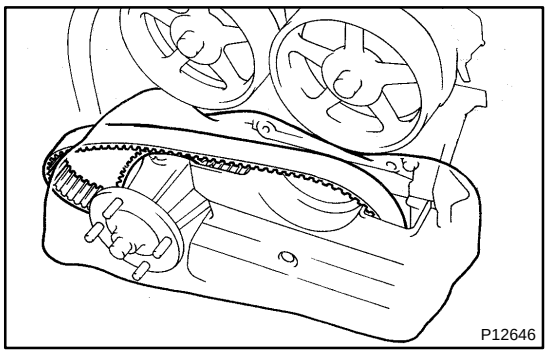

14. REMOVE TIMING BELT FROM CAMSHAFT TIMING PULLEYS (See page EM-15)

NOTICE:

- **Support the timing belt, so that the meshing of the crankshaft timing pulley and timing belt does not shift.**
- **Be careful not to drop anything inside the timing belt cover.**
- **Do not allow the timing belt to come into contact with oil, water or dust.**

15. REMOVE IGNITION COILS ASSEMBLIES (See page IG-6)

16. REMOVE SPARK PLUGS

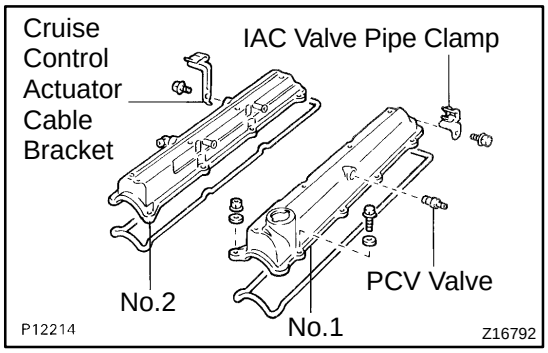

17. REMOVE NO.1 AND NO.2 CYLINDER HEAD COVERS

(a) Remove the 2 bolts, cruise control actuator cable bracket and IAC valve pipe clamp.

(b) Remove the PCV valve.

(c) Remove the 6 bolts, 2 nuts, 8 seal washers and No.1 cylinder head cover and gasket.

(d) Remove the 6 bolts, 2 nuts, 8 seal washers and No.2 cylinder head cover and gasket.

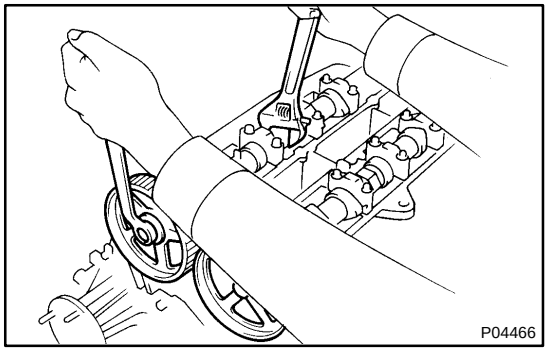

18. REMOVE CAMSHAFT TIMING PULLEYS

Hold the hexagon portion of the camshaft with a wrench, and remove the pulley mounting bolt and camshaft pulley.

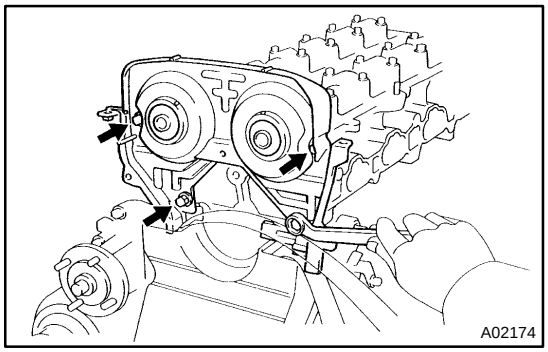

19. REMOVE NO.4 TIMING BELT COVER

Remove the 4 bolts and timing belt cover.

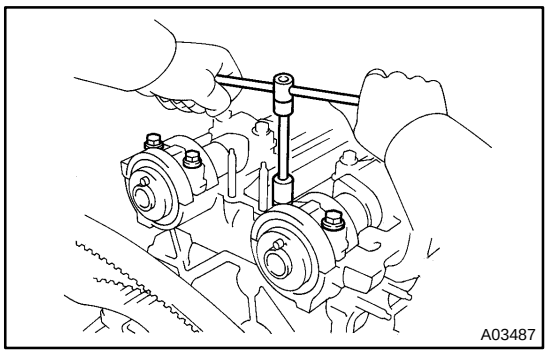

20. REMOVE CAMSHAFTS

(a) Uniformly loosen and remove the 4 No.1 camshaft bearing cap bolts.

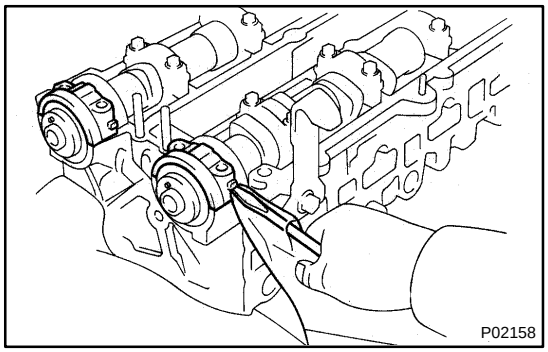

(b) Using a screwdriver, pry out the 2 No.1 camshaft bearing caps and oil seals.

NOTICE:

Be careful not to damage the cap. Tape the screwdriver tip.

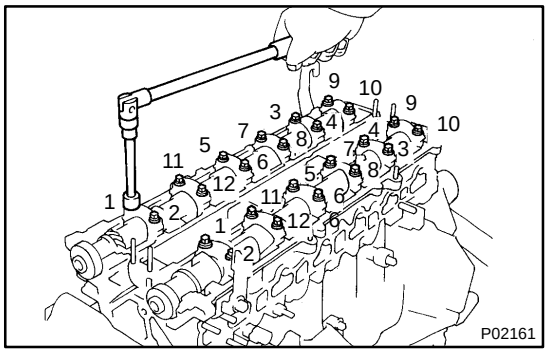

(c) Uniformly loosen and remove the 12 bearing cap bolts, in several passes, in the sequence shown, and remove the 6 bearing caps and camshaft.

(d) Remove the intake and exhaust camshafts.

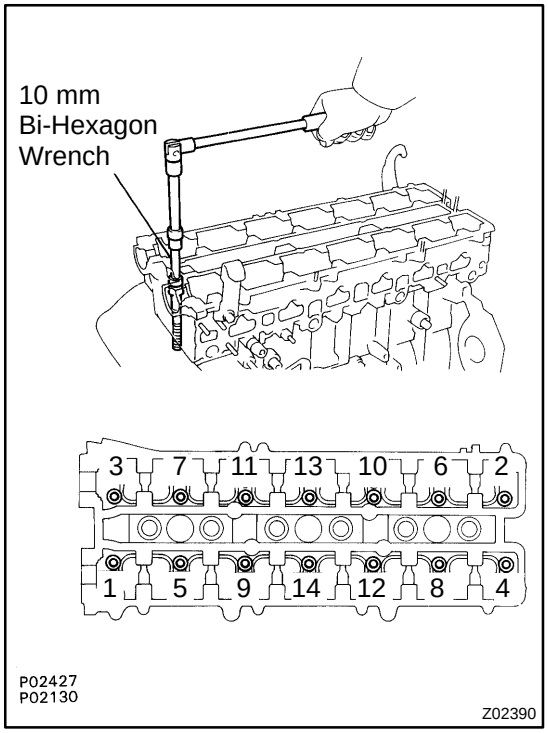

21. REMOVE CYLINDER HEAD

(a) Using a 10 mm bi-hexagon wrench, uniformly loosen and remove the 14 cylinder head bolts, in several passes, in the sequence shown.

NOTICE:

Cylinder head warpage or cracking could result from removing in incorrect order.

(b) Remove the 14 plate washers.

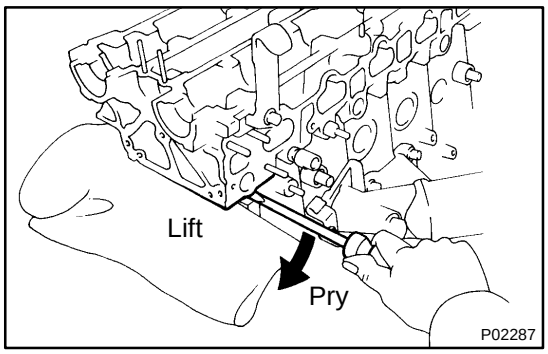

(c) Lift the cylinder head from the dowels on the cylinder block.

(d) Place the head on wooden blocks on a bench.

If the cylinder head is difficult to lift off, pry with a screwdriver between the cylinder head and block projection.

NOTICE:

Be careful not to damage the contact surfaces of the cylinder head and cylinder block.

PP0QG-01

SSM (Special Service Materials)

08826-00080	Seal Packing Black or equivalent (FIPG)	No.1 camshaft bearing cap Cylinder head Rear oil seal retainer
08833-00070	Adhesive 1324, THREE BOND 1324 or equivalent	Drive plate bolt (A/T) Heater union Union for oil cooler hose
08833-00080	Adhesive 1344 THREE BOND 1344 LOCTITE 242 or equivalent	Idler pulley pivot bolt Oil pressure switch

ENGINE MECHANICAL (2JZ-GTE)

PP0QD-01

SST (Special Service Tools)

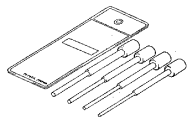	09201-10000	Valve Guide Bushing Remover & Replacer Set	
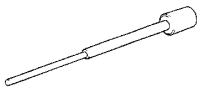	(09201-01060)	Valve Guide Bushing Remover & Replacer 6	
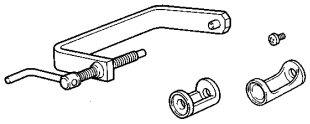	09202-70020	Valve Spring Compressor	
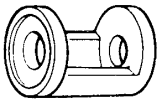	(09202-00010)	Attachment	
	09213-70010	Crankshaft Pulley Holding Tool	
	09222-30010	Connecting Rod Bushing Remover & Replacer	
	09223-15030	Oil Seal & Bearing Replacer	Crankshaft rear oil seal
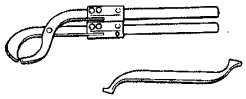	09248-55040	Valve Clearance Adjust Tool Set	
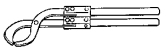	(09248-05410)	Valve Lifter Press	
	(09248-05420)	Valve Lifter Stopper	
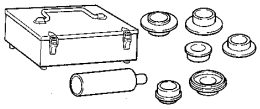	09316-6001 1	Transmission & Transfer Bearing Replacer	
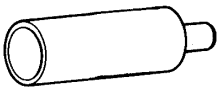	(09316-0001 1)	Replacer Pipe	Crankshaft front oil seal Camshaft oil seal

	(09316-00051)	Replacer "D"	Camshaft oil seal
	09330-00021	Companion Flange Holding Tool	Crankshaft pulley
	09816-30010	Oil Pressure Switch Socket	Knock sensor Oil pressure switch
	09843-18020	Diagnosis Check Wire	
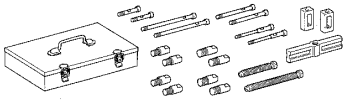	09950-50010	Puller C Set	
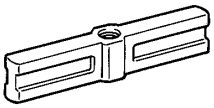	(09951-05010)	Hanger 150	Crankshaft pulley Crankshaft timing pulley
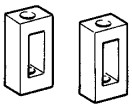	(09952-05010)	Slide Arm	Crankshaft pulley Crankshaft timing pulley
	(09953-05010)	Center Bolt 100	Crankshaft pulley Crankshaft timing pulley
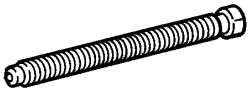	(09953-05020)	Center Bolt 150	Crankshaft pulley Crankshaft timing pulley
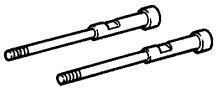	(09954-05010)	Claw No.1	Crankshaft timing pulley
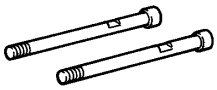	(09954-05030)	Claw No.3	Crankshaft pulley
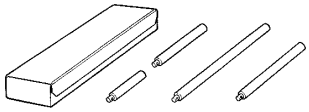	09950-70010	Handle Set	
	(09951-07100)	Handle 100	Crankshaft rear oil seal Valve guide bushing

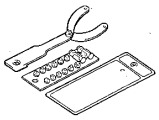	09960-10010	Variable Pin Wrench Set	
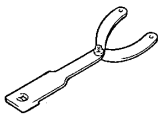	(09962-01000)	Variable Pin Wrench Arm Assy	Camshaft timing pulley PS pump pulley
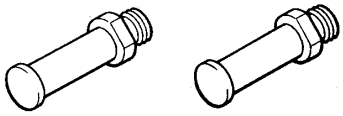	(09963-01000)	Pin 10	Camshaft timing pulley PS pump pulley