Foreword

Congratulations on choosing a SUBARU vehicle. This Owner's Manual has all the information necessary to keep your SUBARU in excellent condition and to properly maintain the emission control system for minimizing emission pollutants. We urge you to read this manual carefully so that you may understand your vehicle and its operation. For information not found in this Owner's Manual, such as details concerning repairs or adjustments, please contact the SUBARU dealer from whom you purchased your SUBARU or the nearest SUBARU dealer.

The information, specifications and illustrations found in this manual are those in effect at the time of printing. SUBARU CORPORATION reserves the right to change specifications and designs at any time without prior notice and without incurring any obligation to make the same or similar changes on vehicles previously sold. This Owner's Manual applies to all models and covers all equipment, including factory installed options. Some explanations, therefore may be for equipment not installed in your vehicle.

Please leave this manual in the vehicle at the time of resale. The next owner will need the information found herein.

SUBARU CORPORATION, TOKYO, JAPAN

"SUBARU" and the six-star cluster design are registered trademarks of SUBARU CORPORATION.

© Copyright 2019 SUBARU CORPORATION

This manual describes the following vehicle types.

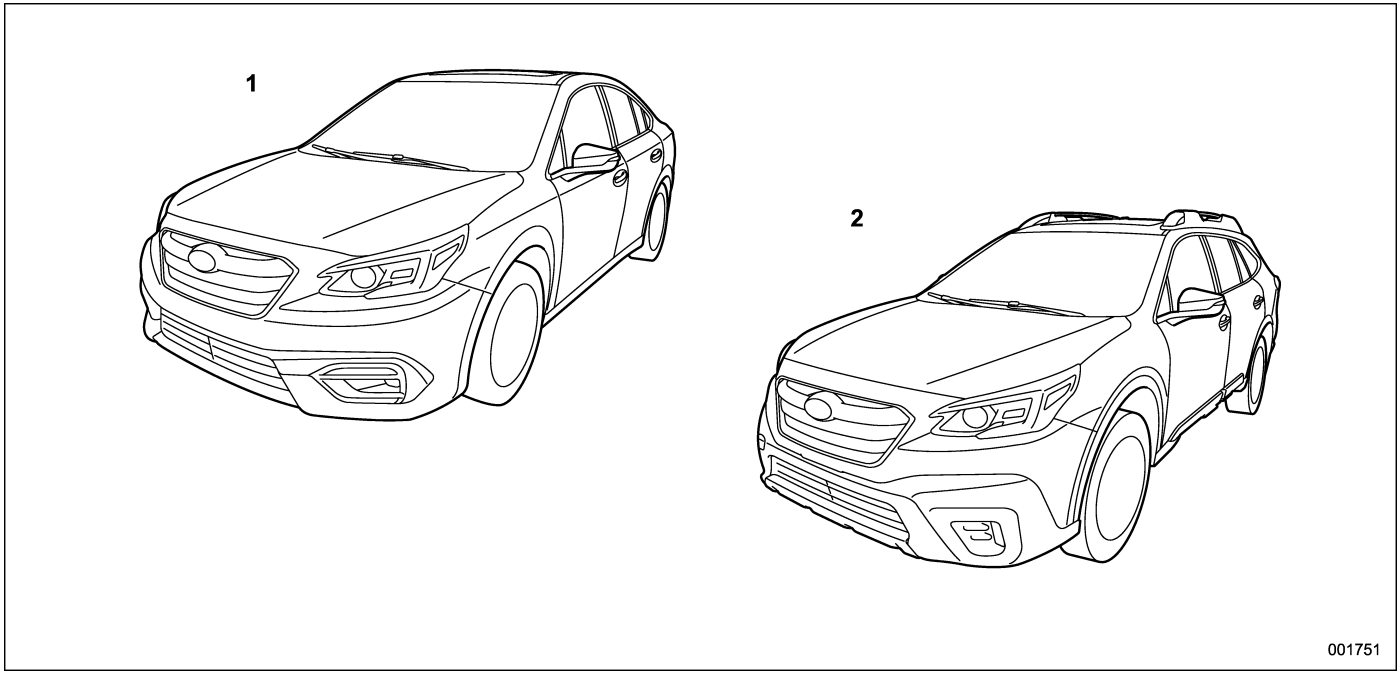

1) Legacy
2) Outback

Table of Contents

Introduction	1	
Illustrated Index	13	
Seat, Seatbelt and SRS Airbags	27	Chapter 1
Keys and Doors	111	Chapter 2
Instruments and Controls	163	Chapter 3
Climate Control	271	Chapter 4
Audio	291	Chapter 5
Interior Equipment	295	Chapter 6
Starting and Operating	315	Chapter 7
Driving Tips	409	Chapter 8
In Case of Emergency	439	Chapter 9
Appearance Care	463	Chapter 10
Maintenance and Service	471	Chapter 11
Specifications	519	Chapter 12
Consumer Information and Reporting Safety Defects	539	Chapter 13
Index	555	Chapter 14

- **Warranties** 2
  - Warranties for U.S.A. 2
  - Warranties for Canada 2
  - Warranties except for U.S.A. and Canada 2
- **How to Use This Owner's Manual** 2
  - Using Your Owner's Manual 2
  - Safety Warnings 3
  - Safety Symbol 4
  - Abbreviation List 4
- **Vehicle Symbols** 5
- **Safety Precautions When Driving** 5
  - Seatbelt and SRS Airbag 5
  - Child Safety 5
  - Engine Exhaust Gas (Carbon Monoxide) 6
  - Drinking and Driving 7
  - Drugs and Driving 7
  - Driving When Tired or Sleepy 8
  - Modification of Your Vehicle 8
  - Use of Cell Phones/Texting and Driving 8
  - Driving Vehicles Equipped with Navigation System 8
  - Driving with Pets 8
  - Tire Pressures 9
  - On-Road and Off-Road Driving 9
  - Attaching Accessories 9
- **General Information** 10
  - California Perchlorate Advisory 10
  - Noise from under the Vehicle 10
  - Event Data Recorder 10

Warranties

■ Warranties for U.S.A.

SUBARU vehicles distributed by Subaru of America, Inc. and sold at retail by an authorized SUBARU dealer in the United States come with the following warranties:

- **SUBARU Limited Warranties**
- **Federal Emission Control Systems Warranties**
- **California Emissions Control Systems Warranties**

All warranty information, including applicability, details of coverage and exclusions, is in the “Warranty and Maintenance Booklet.” Read these warranties carefully.

■ Warranties for Canada

SUBARU vehicles distributed by Subaru Canada, Inc. and sold at retail by an authorized SUBARU dealer in Canada come with the following warranties:

- **SUBARU Limited Warranty**
- **Emission Control System Warranty**

All warranty information, including applicability, details of coverage and exclusions, is in the “Warranty and Service Booklet.” Read these warranties carefully.

■ Warranties except for U.S.A. and Canada

All warranty information, including details of coverage and exclusions, is in the “Warranty and Maintenance Booklet.” Read these warranties carefully.

How to Use This Owner’s Manual

■ Using Your Owner’s Manual

Before you operate your vehicle, carefully read this manual. To protect yourself and extend the service life of your vehicle, follow the instructions in this manual. Failure to observe these instructions may result in serious injury and damage to your vehicle.

This manual is composed of fourteen chapters. Each chapter begins with a brief table of contents, so you can usually tell at a glance if that chapter contains the information you want.

Introduction

This chapter informs you general information before driving.

Illustrated Index

This chapter informs you about the vehicle layout with illustrations.

Chapter 1: Seat, Seatbelt and SRS Airbags

This chapter informs you how to use the seat and seatbelt and contains precautions for the SRS airbags.

Chapter 2: Keys and Doors

This chapter informs you how to operate the keys, locks and windows.

Chapter 3: Instruments and Controls
This chapter informs you about the operation of instrument panel indicators and how to use the instruments and other switches.

Chapter 4: Climate Control
This chapter informs you how to operate the climate control.

Chapter 5: Audio
This chapter informs you about your audio system.

Chapter 6: Interior Equipment
This chapter informs you how to operate interior equipment.

Chapter 7: Starting and Operating
This chapter informs you how to start and operate your SUBARU.

Chapter 8: Driving Tips
This chapter informs you how to drive your SUBARU in various conditions and explains some safety tips on driving.

Chapter 9: In case of Emergency
This chapter informs you what to do if you have a problem, such as a flat tire or engine overheating.

Chapter 10: Appearance Care
This chapter informs you how to keep your SUBARU looking good.

Chapter 11: Maintenance and Service
This chapter informs you when you need to take your SUBARU to the dealer for scheduled maintenance and informs you how to keep your SUBARU running properly.

Chapter 12: Specifications
This chapter informs you about the dimensions and capacities of your SUBARU.

Chapter 13: Consumer Information and Reporting Safety Defects
This chapter informs you about Tire information, Uniform tire quality grading standards and Reporting safety defects.

Chapter 14: Index
This is an alphabetical listing of all that's in this manual. You can use it to quickly find something you want to read.

For EyeSight system:
For details about the EyeSight system, refer to the Owner's Manual supplement for the EyeSight system.

■ Safety Warnings

You will find a number of WARNINGs, CAUTIONs and NOTEs in this manual.

These safety warnings alert you to potential hazards that could result in injury to you or others.

Please read these safety warnings as well as all other portions of this manual carefully in order to gain a better understanding of how to use your SUBARU vehicle safely.

⚠ WARNING

A WARNING indicates a situation in which serious injury or death could result if the warning is ignored.

⚠ CAUTION

A CAUTION indicates a situation in which injury or damage to your vehicle, or both, could result if the caution is ignored.

NOTE

A NOTE gives information or suggestions how to make better use of your vehicle.

– CONTINUED –

■ Safety Symbol

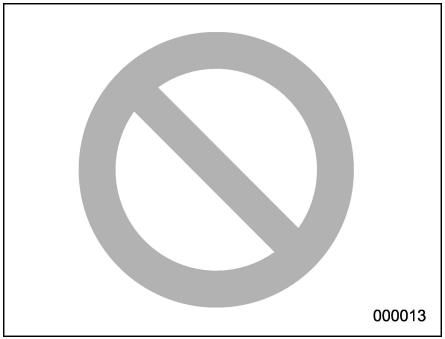

You will find a circle with a slash through it in this manual. This symbol means "Do not", "Do not do this", or "Do not let this happen", depending upon the context.

■ Abbreviation List

You may find several abbreviations in this manual. The meanings of the abbreviations are shown in the following list.

Abbreviation	Meaning
ABS	Anti-lock brake system
A/C	Air conditioner
AKI	Anti knock index
ALR	Automatic locking retractor
ALR/ELR	Automatic locking retractor/ Emergency locking retractor
AVH	Auto Vehicle Hold
AWD	All-wheel drive
BSD	Blind Spot Detection
CVT	Continuously variable transmission
DRL	Daytime running light
EBD	Electronic brake force distribution
ELR	Emergency locking retractor
GAW	Gross axle weight
GAWR	Gross axle weight rating
GPS	Global positioning system
GVW	Gross vehicle weight
GVWR	Gross vehicle weight rating
INT	Intermittent
LATCH	Lower anchors and tethers for children
LCA	Lane Change Assist
LED	Light emitting diode
MIL	Malfunction indicator light
MMT	Methylcyclopentadienyl manganese tricarbonyl
OBD	On-board diagnostics
RAB	Reverse Automatic Braking
RCTA	Rear Cross Traffic Alert
RON	Research octane number
SI-DRIVE	SUBARU Intelligent Drive
SRH	Steering Responsive Headlight
SRS	Supplemental restraint system
TIN	Tire identification number
TPMS	Tire pressure monitoring system

Vehicle Symbols

There are some of the symbols you may see on your vehicle.

For warning and indicator lights, refer to “Warning and Indicator Lights” ☞P24.

Mark	Name
	WARNING
	CAUTION
	Read these instructions carefully
	Wear eye protection
	Battery fluid contains sulfuric acid
	Keep children away
	Keep flames away
	Prevent explosions

Safety Precautions When Driving

■ Seatbelt and SRS Airbag

WARNING

- **All persons in the vehicle must fasten their seatbelts BEFORE the vehicle starts to move. Otherwise, the possibility of serious injury becomes greater in the event of a sudden stop or accident.**
- **To obtain maximum protection in the event of an accident, the driver and all passengers must always wear seatbelts when in the vehicle. The SRS (Supplemental Restraint System) airbag does not do away with the need to fasten seatbelts. In combination with the seatbelts, it offers the best combined protection in case of a serious accident.**

  Not wearing a seatbelt increases the chance of severe injury or death in a crash even when the vehicle has the SRS airbag.
- **The SRS airbags deploy with considerable speed and force. Occupants who are out of proper position when the SRS airbag deploys could suffer very serious injuries. Because the SRS airbag needs enough space for deployment, the driver should always sit upright and well back in the seat as far from the steering wheel as practical while still maintaining full vehicle control and the front passenger should move the seat as far back as possible and sit upright and well back in the seat.**

For instructions and precautions, carefully read the following sections.

- For the seatbelt system, refer to “Seatbelts” ☞P46.
- For the SRS airbag system, refer to “SRS Airbag (Supplemental Restraint System Airbag)” ☞P75.

■ Child Safety

WARNING

- **Never hold a child on your lap or in your arms while the vehicle is moving. The passenger cannot protect the child from injury in a collision, because the child will be caught between the passen-**

– CONTINUED –

ger and objects inside the vehicle.

- **While riding in the vehicle, infants and small children should always be seated in the REAR seat in an infant or child restraint system which is appropriate for the child's age, height and weight. If a child is too big for a child restraint system, the child should sit in the REAR seat and be restrained using the seatbelts. According to accident statistics, children are safer when properly restrained in the rear seating positions than in the front seating positions. Never allow a child to stand up or kneel on the seat.**
- **Place children in the REAR seat properly restrained at all times in a child restraint system or in a seatbelt. The SRS airbag deploys with considerable speed and force and can injure or even kill children, especially if they are not restrained or improperly restrained. Because children are lighter and weaker than adults, their risk of being injured from deployment is greater.**
- **NEVER INSTALL A CHILD SEAT IN THE FRONT SEAT. DOING SO RISKS SERIOUS INJURY OR DEATH TO THE CHILD BY PLACING THE CHILD'S HEAD TOO CLOSE TO THE SRS AIRBAG.**
- **Always turn the child safety locks to the "LOCK" position when children sit in the rear seat. Serious injury could result if a child accidentally opens the door and falls out. Refer to "Child Safety Locks" ☞P143.**
- **Always lock the passengers' windows using the lock switch when children are riding in the vehicle. Failure to follow this procedure could result in injury to a child operating the power window. Refer to "Windows" ☞P143.**
- **Never leave unattended children, adults or animals in the vehicle. They could accidentally injure themselves or others through inadvertent operation of the vehicle. Also, on hot or sunny days, temperature in a closed vehicle could quickly become high enough to cause severe or possibly fatal injuries to them.**
- **Help prevent children, adults or animals from locking themselves in the trunk. On hot or sunny days, the temperature in the trunk could quickly become high enough to cause death or serious heat-related injuries including brain damage to anyone locked inside, particularly for small children.**
- **When leaving the vehicle, close all windows and lock all doors. Also make certain that the trunk is closed.**

For instructions and precautions, carefully read the following sections.

- For the seatbelt system, refer to "Seatbelts" ☞P46.
- For the child restraint system, refer to "Child Restraint Systems" ☞P57.
- For the SRS airbag system, refer to "SRS Airbag (Supplemental Restraint System Airbag)" ☞P75.

■ Engine Exhaust Gas (Carbon Monoxide)

⚠ WARNING

- **Never inhale engine exhaust gas. Engine exhaust gas contains carbon monoxide, a colorless and odorless gas which is dangerous, or even lethal, if inhaled.**

- **Always properly maintain the engine exhaust system to prevent engine exhaust gas from entering the vehicle.**
- **Never run the engine in a closed space, such as a garage, except for the brief time needed to drive the vehicle in or out of it.**
- **Avoid remaining in a parked vehicle for a long time while the engine is running. If that is unavoidable, then use the ventilation fan to force fresh air into the vehicle.**
- **Always keep the front ventilator inlet grille free from snow, leaves or other obstructions to ensure that the ventilation system always works properly.**
- **If at any time you suspect that exhaust fumes are entering the vehicle, have the problem checked and corrected as soon as possible. If you must drive under these conditions, drive only with all windows fully open.**
- **Keep the trunk lid or rear gate closed while driving to prevent exhaust gas from entering the vehicle.**

■ Drinking and Driving

⚠ WARNING

Drinking and then driving is very dangerous. Alcohol in the bloodstream delays your reaction and impairs your perception, judgment and attentiveness. If you drive after drinking – even if you drink just a little – it will increase the risk of being involved in a serious or fatal accident, injuring or killing yourself, your passengers and others. In addition, if you are injured in the accident, alcohol may increase the severity of that injury.

Please don't drink and drive.

Drunken driving is one of the most frequent causes of accidents. Since alcohol affects all people differently, you may have consumed too much alcohol to drive safely even if the level of alcohol in your blood is below the legal limit. The safest thing you can do is never drink and drive. However if you have no choice but to drive, stop drinking and sober up completely before getting behind the wheel.

■ Drugs and Driving

⚠ WARNING

There are some drugs (over the counter and prescription) that can delay your reaction time and impair your perception, judgment and attentiveness. If you drive after taking them, it may increase your, your passengers' and other persons' risk of being involved in a serious or fatal accident.

If you are taking any drugs, check with your doctor or pharmacist or read the literature that accompanies the medication to determine if the drug you are taking can impair your driving ability. Do not drive after taking any medications that can make you drowsy or otherwise affect your ability to safely operate a motor vehicle. If you have a medical condition that requires you to take drugs, please consult with your doctor.

Never drive if you are under the influence of any illicit mind-altering drugs. For your own health and well-being, we urge you not to take illegal drugs in the first place and to seek treatment if you are addicted to those drugs.

– CONTINUED –

Driving When Tired or Sleepy

WARNING

When you are tired or sleepy, your reaction will be delayed and your perception, judgment and attentiveness will be impaired. If you drive when tired or sleepy, your, your passengers' and other persons' chances of being involved in a serious accident may increase.

Please do not continue to drive but instead find a safe place to rest if you are tired or sleepy. On long trips, you should make periodic rest stops to refresh yourself before continuing on your journey. When possible, you should share the driving with others.

Modification of Your Vehicle

WARNING

Do not remove the genuine SUBARU navigation and/or audio system. Doing so could cause the following functions to be inoperable.

- **Combination meter display (color LCD)**
- **Rear view image and help lines**
- **Vehicle settings**
- **Climate control**
- **Front seat heater and ventilation**
- **Clock**

CAUTION

Your vehicle should not be modified other than with genuine SUBARU parts and accessories. Other types of modifications could affect its performance, safety or durability, and may even violate governmental regulations. In addition, damage or performance problems resulting from modification may not be covered under warranties.

Use of Cell Phones/Texting and Driving

CAUTION

Do not talk on a cell phone or text while driving; it may distract your attention from driving and lead to an accident. If you use a cell phone to talk or text, first pull off the road and park in a safe place. In some States/Provinces, it may be lawful to talk on a phone while driving, but only if the phone is hands-free.

Driving Vehicles Equipped with Navigation System

WARNING

Do not allow the monitor to distract your attention from driving. Also, do not operate the controls of the navigation system while driving. The loss of attention to driving could lead to an accident. If you wish to operate the controls of the navigation system, first take the vehicle off the road and stop it in a safe location.

Driving with Pets

Unrestrained pets can interfere with your driving and distract your attention from driving. In a collision or sudden stop, unrestrained pets or cages can be thrown around inside the vehicle and hurt you or your passengers. Besides, the pets can be hurt under these situations. It is also for their own safety that pets should be properly restrained in your vehicle. Restrain a pet with a special traveling harness

which can be secured to the rear seat with a seatbelt or use a pet carrier which can be secured to the rear seat by routing a seatbelt through the carrier's handle. Never restrain pets or pet carriers in the front passenger's seat. For further information, consult your veterinarian, local animal protection society or pet shop.

■ Tire Pressures

Check and, if necessary, adjust the pressure of each tire and the spare (if equipped) at least once a month and before any long journey.

Check the tire pressure when the tires are cold. Use a pressure gauge to adjust the tire pressures to the values shown on the tire placard. For detailed information, refer to "Tires and Wheels" ☞P492.

⚠ WARNING

Driving at high speeds with excessively low tire pressures can cause the tires to deform severely and to rapidly become hot. A sharp increase in temperature could cause tread separation, and destruction of the tires. The resulting loss of vehicle control could lead to an accident.

■ On-Road and Off-Road Driving

This vehicle is classified as a utility vehicle. Utility vehicles have a significantly higher rollover rate than other types of vehicles. Your vehicle has a higher ground clearance and higher center of gravity, making it more likely to roll over than ordinary passenger cars. It also handles and maneuvers differently from other passenger cars. For this reason, please read carefully the following section and follow the instructions and precautions in order to prevent serious injury or death due to loss of control, rollover and other accidents. Refer to "Off Road Driving" ☞P414.

■ Attaching Accessories

⚠ WARNING

- **Do not attach any accessories, labels or stickers (other than properly placed inspection stickers) to the windshield. Such items may obstruct your view.**
- **If it is necessary to attach an accessory (such as an electronic toll collection (ETC) device or security pass) to the windshield, consult your SUBARU dealer for details on the proper location.**

General Information

■ California Perchlorate Advisory

Certain vehicle components such as airbag modules, seatbelt pretensioners and keyless entry transmitter batteries may contain perchlorate material. Special handling may apply for service or vehicle end of life disposal. See www.dtsc.ca.gov/hazardouswaste/perchlorate.

■ Noise from under the Vehicle

NOTE

You may hear a noise from under the vehicle approximately 5 to 10 hours after the ignition switch is turned to the "LOCK"/"OFF" position. However, this does not indicate a malfunction. This noise is caused by the operation of the fuel evaporation leakage checking system and the operation is normal. The noise will stop after approximately 15 minutes.

■ Event Data Recorder

This vehicle is equipped with an event data recorder (EDR). The main purpose of an EDR is to record, in certain crash or near crash-like situations, such as an air bag deployment or hitting a road obstacle, data that will assist in understanding how a vehicle's systems performed. The EDR is designed to record data related to vehicle dynamics and safety systems for a short period of time, typically 30 seconds or less. The EDR in this vehicle is designed to record such data as:

- How various systems in your vehicle were operating;
- Whether or not the driver and passenger safety belts were buckled/fastened;
- How far (if at all) the driver was depressing the accelerator and/or brake pedal; and,
- How fast the vehicle was traveling.

These data can help provide a better understanding of the circumstances in which crashes and injuries occur. NOTE: EDR data are recorded by your vehicle only if a non-trivial crash situation occurs; no data are recorded by the EDR under normal driving conditions and no personal data (e.g., name, gender, age, and crash location) are recorded. However, other parties, such as law enforcement, could combine the EDR data with the type of personally identifying data routinely acquired during a crash investigation.

To read data recorded by an EDR, special equipment is required, and access to the vehicle or the EDR is needed. In addition to the vehicle manufacturer, other parties, such as law enforcement, that have the special equipment, can read the information if they have access to the vehicle or the EDR.

- Exterior 14
- Interior 16
- Instrument Panel 19
- Steering Wheel 20
- Light Control and Wiper Control Levers/ Switches 21
- Combination Meter 22
  - U.S. Spec. Models 22
  - Except U.S. Spec. Models 23
- Warning and Indicator Lights 24

Exterior

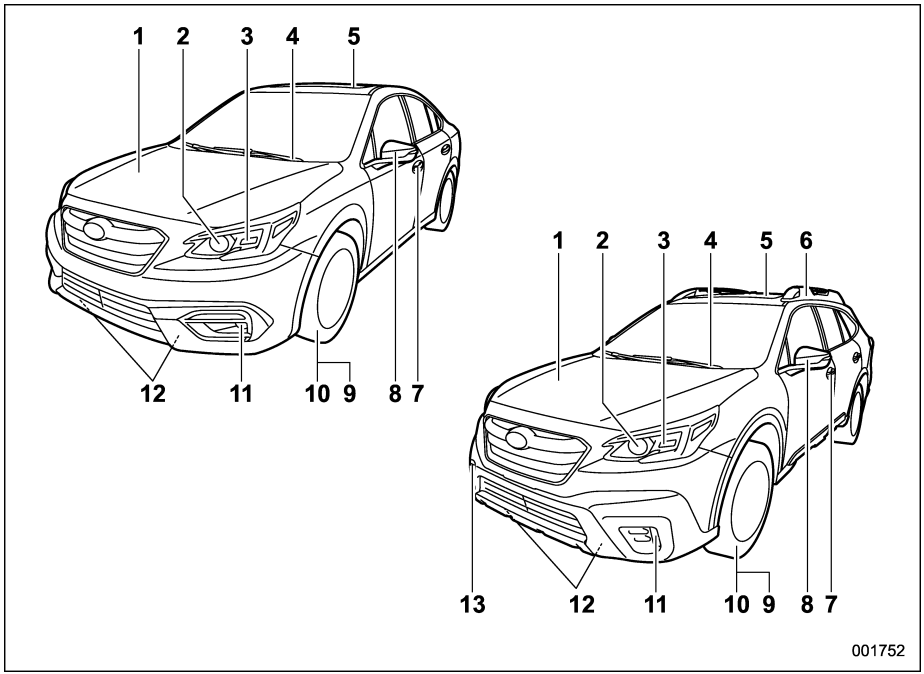

1) Engine hood (page 477)
2) Lights (page 241, 508)
3) Turn signal lights (page 250, 508)
4) Front wipers (page 252)
5) Moonroof (page 159)
6) Roof rail with integrated crossbars (page 424)
7) Door locks (page 136)
8) Outside mirrors (page 264)
9) Tire pressure (page 494)
10) Flat tires (page 444)
11) Fog lights (page 249, 508)
12) Tie-down hooks (page 452)
13) Towing hook (Outback) (page 452)

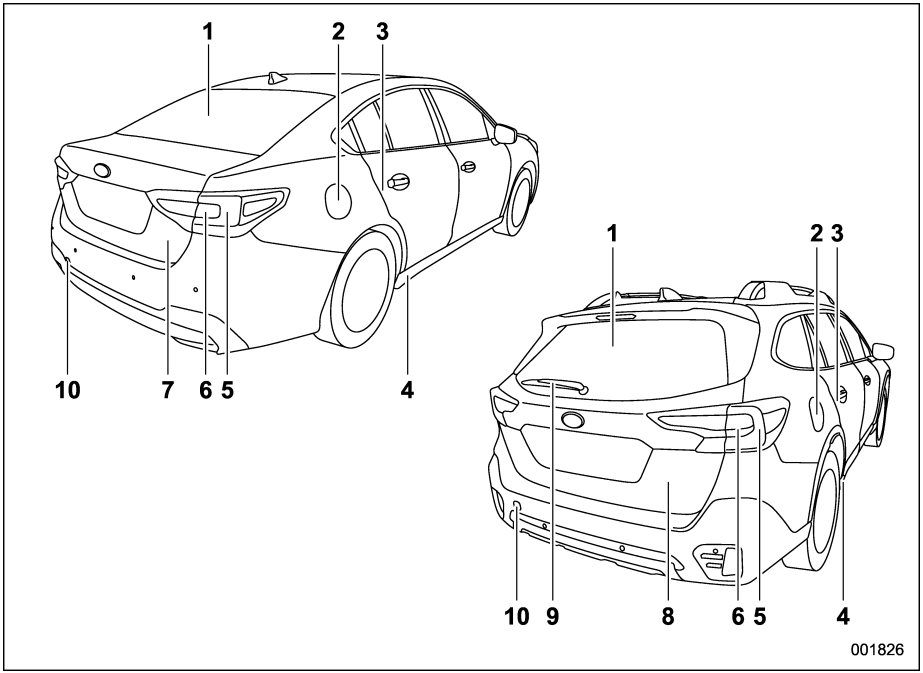

1) Rear window defogger (page 254)
2) Fuel filler lid and cap (page 319)
3) Child safety locks (page 143)
4) Tie-down holes (page 452)
5) Lights (page 241, 508)
6) Turn signal lights (page 250, 508)
7) Trunk lid (page 146)
8) Rear gate (page 149)
9) Rear wiper (page 253)
10) Towing hook (page 452)

Interior

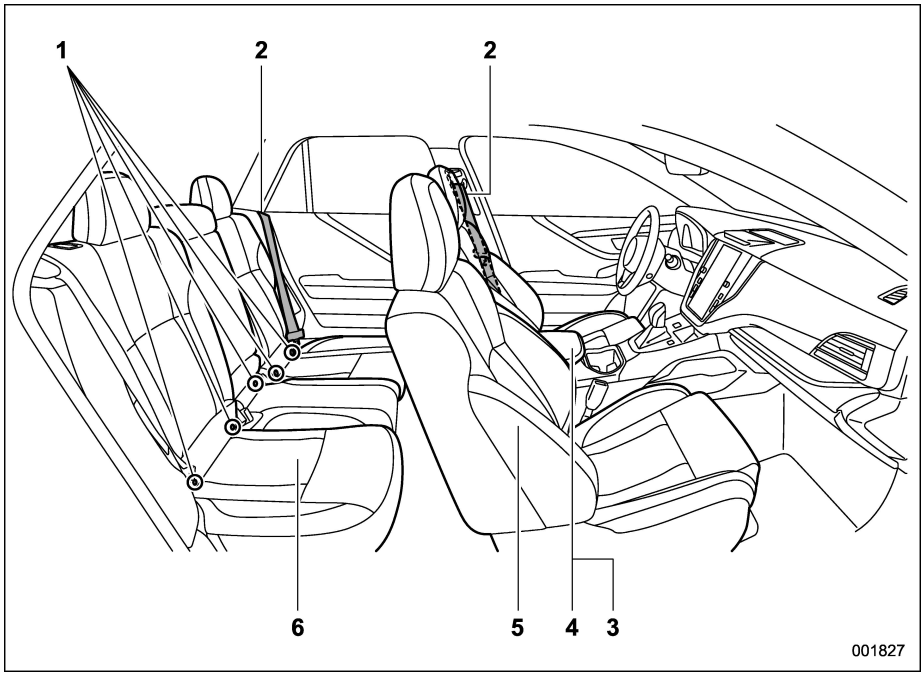

1) Lower anchorages for child restraint system (page 67)
   · **U.S.-spec. models:**
   5 lower anchorages
   · **Except U.S.-spec. models:**
   4 lower anchorages
2) Seatbelts (page 46)
3) Center console (page 299)
4) Accessory power outlet (page 302)
5) Front seats (page 28)
6) Rear seats (page 40)

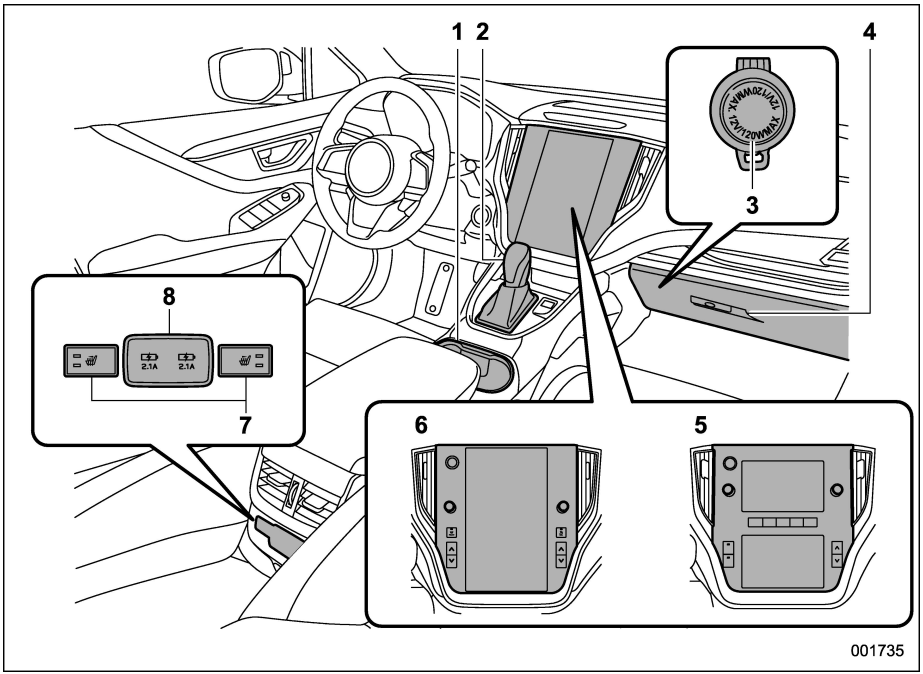

1) Cup holder (page 300)
2) Select lever (page 337)
3) Accessory power outlet (page 302)
4) Glove box (page 299)
5) Dual 7.0-inch display models*1 (page 227)/Climate control (page 273)/Audio*2
6) 11.6-inch display models*1 (page 206)/Climate control (page 276)/Audio*2/Navigation system*2
7) Rear seat heater switches (page 38)
8) USB power supply (page 304)

*1: Center information display

*2: For details about how to use the audio and navigation system (if equipped), refer to the separate navigation/audio Owner's Manual.

– CONTINUED –

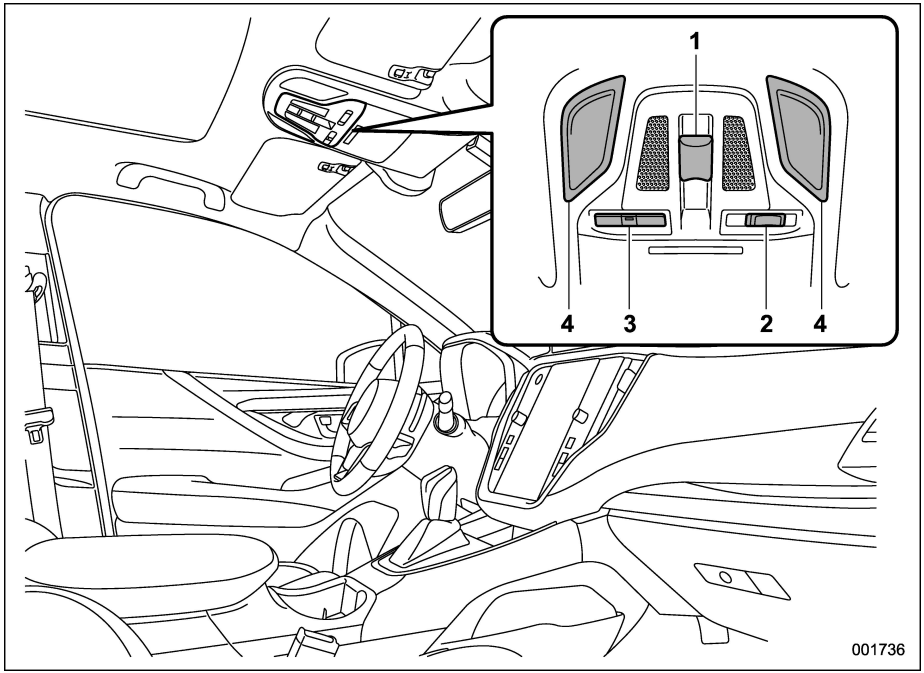

1) Moonroof switch (page 159)
2) Door interlock switch (page 296)
3) Buttons for SUBARU STARLINK
4) Map light switches (page 296)

NOTE

For models with SUBARU STARLINK: Refer to the Owner's Manual supplement for SUBARU STARLINK Safety and Security.

Instrument Panel

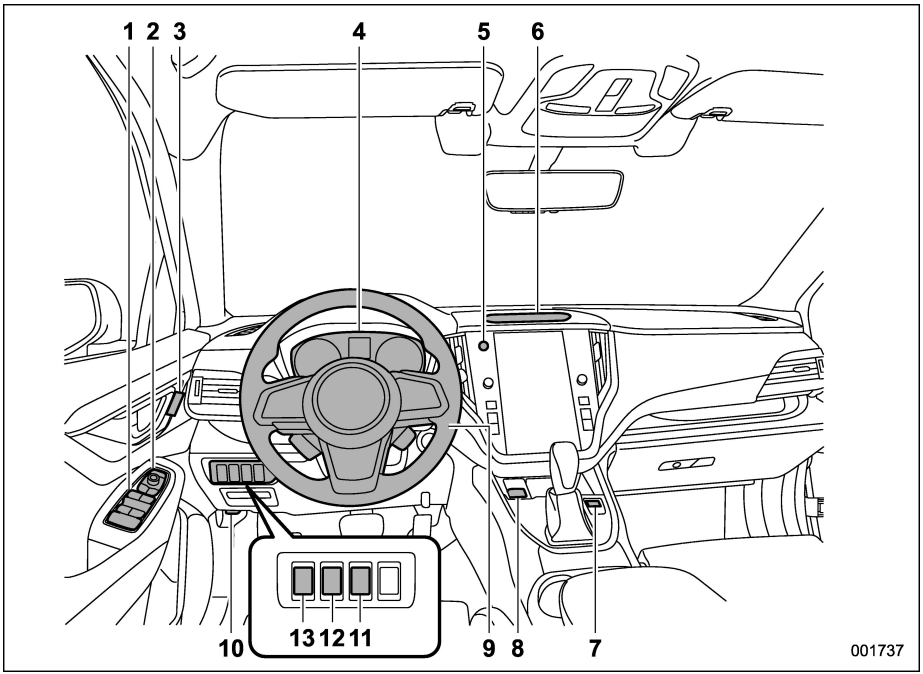

1) Power window switches (page 143)
2) Remote control mirror switch (page 264)
3) Seat position memory buttons (page 33)
4) Combination meter (page 171)
5) Hazard warning flasher switch (page 170)
6) Camera for Driver Monitoring System (page 394)
7) Front view monitor switch (page 366)
8) Electronic parking brake switch (page 355)
9) Tilt/Telescopic steering (page 267)
10) Hood release knob (page 477)
11) Hands-free Power Rear Gate off switch (page 158)
12) Illumination brightness control dial (page 173)
13) Trunk lid opener button (page 147)/ Power rear gate button (page 150)

Steering Wheel

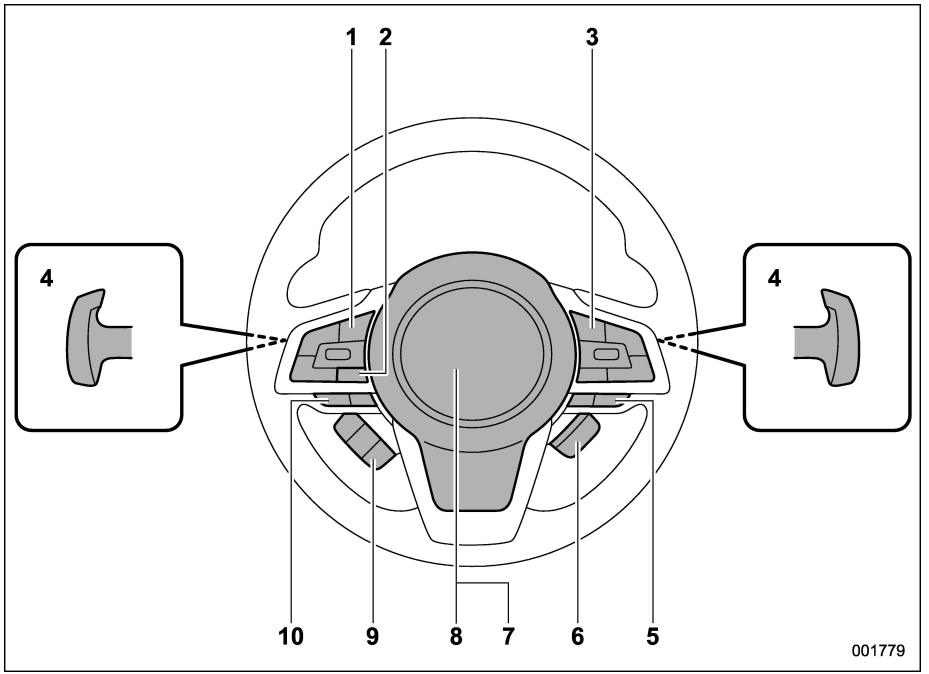

1) Audio control switches*1
2) Talk switch for voice command system*1
3) Cruise control switches*2
4) Shift paddles (page 340)
5) SI-DRIVE switches (page 343)
6) Heated Steering Wheel switch (page 267)
7) SRS airbag (page 75)
8) Horn (page 268)
9) Control switches for combination meter display (color LCD) (page 198)
10) Hands-free phone switches*1

*1: For details about how to use the switches, refer to the separate navigation/audio Owner's Manual.

*2: For details about how to use the switches, refer to the Owner's Manual supplement for the EyeSight system.

Light Control and Wiper Control Levers/Switches

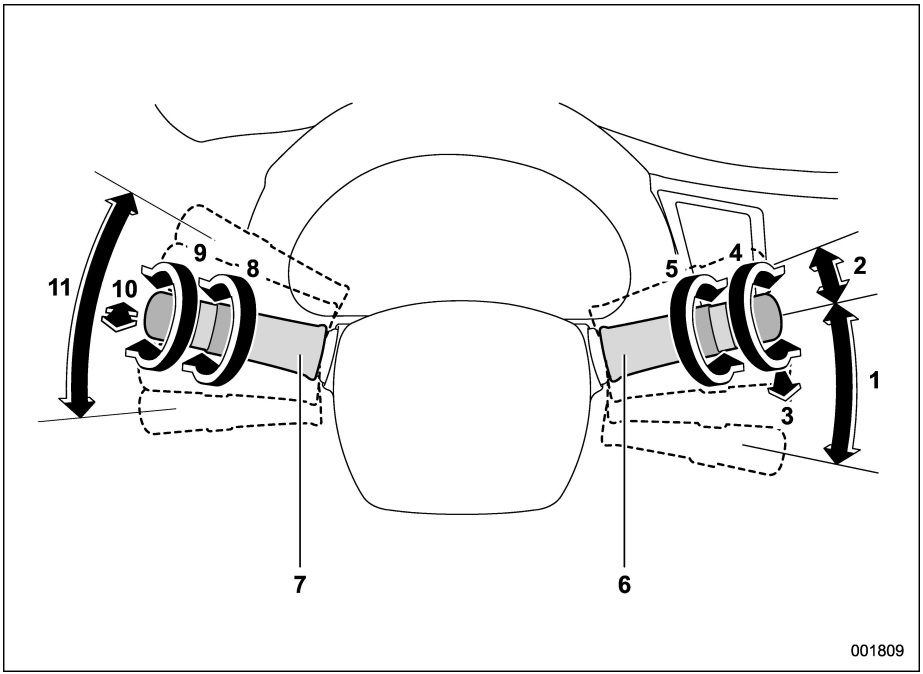

1) Windshield wiper (page 251)
2) Mist (page 252)
3) Windshield washer (page 253)
4) Rear window wiper and washer switch (page 253)
5) Wiper intermittent time control switch (page 252)
6) Wiper control lever (page 252)
7) Light control switch (page 241)
8) Front fog light switch (page 249)
9) Headlight ON/OFF/AUTO (page 242)
10) Headlight flasher High/Low beam change (page 244)
11) Turn signal lever (page 250)

Combination Meter

■ U.S. Spec. Models

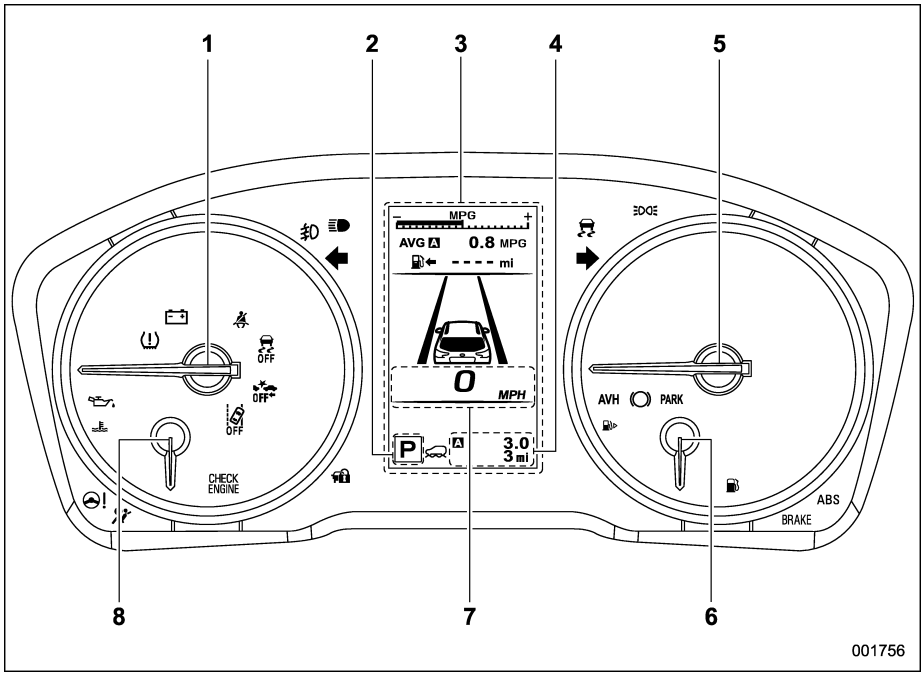

1) Tachometer (page 171)
2) Select lever/gear position indicator (page 193)
3) Combination meter display (color LCD) (page 197)
4) Trip meter and odometer (page 171)
5) Speedometer (page 171)
6) Fuel gauge (page 172)
7) Digital speed screen (page 204)
8) Engine coolant temperature gauge (page 173)

■ Except U.S. Spec. Models

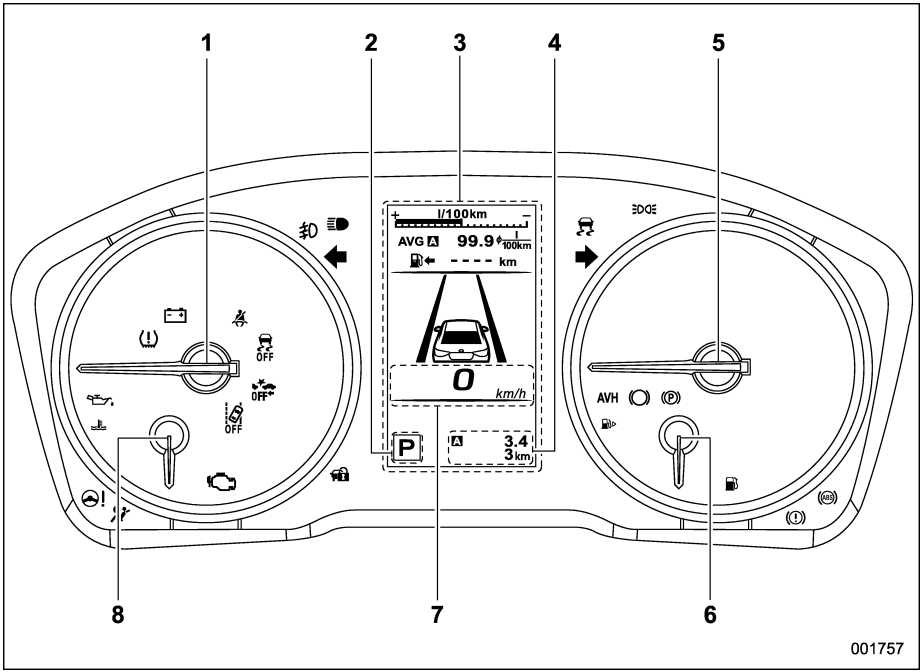

1) Tachometer (page 171)
2) Select lever/gear position indicator (page 193)
3) Combination meter display (color LCD) (page 197)
4) Trip meter and odometer (page 171)
5) Speedometer (page 171)
6) Fuel gauge (page 172)
7) Digital speed screen (page 204)
8) Engine coolant temperature gauge (page 173)

Warning and Indicator Lights

Mark	Name	Page
	Seatbelt warning light	175
	Front passenger's seatbelt warning light	175
	SRS airbag system warning light	177
CHECK ENGINE /	CHECK ENGINE warning light/Malfunction indicator light	178
	Charge warning light	179
	Oil pressure warning light	179
	Engine low oil level warning indicator	179
AT OIL TEMP	AT OIL TEMP warning light	180
ABS / (ABS)	ABS warning light	181
BRAKE / (!)	Brake system warning light	182

Mark	Name	Page
PARK / (P)	Electronic parking brake indicator light	183
	Door open indicator	185
	Engine hood open warning light	185
	Low fuel warning light	185
AWD	All-Wheel Drive warning light	185
	Power steering warning light	186
AVH	Auto Vehicle Hold ON indicator light	184
	Auto Vehicle Hold operation indicator light	185
	Vehicle Dynamics Control warning light/Vehicle Dynamics Control operation indicator light	186
OFF	Vehicle Dynamics Control OFF indicator light	187

Mark	Name	Page
	Access key warning indicator (if equipped)	187
	Security indicator light	192
	Turn signal indicator lights	193
	High beam indicator light	193
	High beam assist indicator	193
	Automatic headlight beam leveler warning light (if equipped)	194
	LED headlight warning light	194
SRH OFF	Steering Responsive Headlight OFF indicator light (if equipped)	194
SRH	Steering Responsive Headlight warning light (if equipped)	194
	Front fog light indicator light (if equipped)	194
	Low fuel warning light	185

Mark	Name	Page
	X-MODE indicator (Outback)	195
	Hill descent control indicator (Outback)	195
	Headlight indicator light	194
	Low tire pressure warning light (U.S. spec. models)	180
	Front passenger's frontal airbag ON indicator light	177
	Front passenger's frontal airbag OFF indicator light	177
	Windshield washer fluid warning light	185
	Auto Start Stop OFF indicator light	194
	Auto Start Stop indicator light (green)	195
	Auto Start Stop warning light (yellow)	194

Mark	Name	Page
	Auto Start Stop No Activity Detected indicator light	195
	BSD/RCTA warning indicator (if equipped)	195
	BSD/RCTA OFF indicator (if equipped)	195
	Intelligent (I) mode indicator (if equipped)	193
	Sport Sharp (S#) mode indicator (if equipped)	193
	Icy road surface warning indicator	196
	RAB warning indicator (if equipped)	196
	RAB OFF indicator (if equipped)	196
	Sonar audible alarm OFF indicator (if equipped)	197
	Driver Monitoring System operation indicator light (green) (if equipped)	196
	Driver Monitoring System warning light (yellow) (if equipped)	196

Mark	Name	Page
	Driver Monitoring System OFF indicator light (if equipped)	196
	Driver Monitoring System temporary stop indicator light (if equipped)	196

1-1. Front Seats 28
Manual Seat (If Equipped) 30
Power Seat (If Equipped) 31
Head Restraint Adjustment 36
1-2. Seat Heater (If Equipped) 38
Front Seat Heater 38
Rear Seat Heater 38
1-3. Seat Ventilation (If Equipped) 39
1-4. Rear Seats 40
Reclining the Seatback (Outback) 40
Folding Down the Rear Seatback 41
Head Restraint Adjustment 44
Armrest 45
1-5. Seatbelts 46
Seatbelt Safety Tips 46
Emergency Locking Retractor (ELR) 47
Automatic Locking Retractor/Emergency Locking Retractor (ALR/ELR) 47
Seatbelt Warning Light and Chime 47
Fastening the Seatbelt 47
Seatbelt Maintenance 53
1-6. Seatbelt Pretensioners 54
Seatbelt with Shoulder Belt Pretensioner 55
Seatbelt with Shoulder Belt and Lap Belt Pretensioners 55
System Monitors 56
System Servicing 56
Precautions against Vehicle Modification 56
1-7. Child Restraint Systems 57
Safety Tips for Installing Child Restraint Systems 59
Where to Place a Child Restraint System 59
Choosing a Child Restraint System 62
Installing Child Restraint Systems with ALR/ELR Seatbelt 62
Installing a Booster Seat 66
Installation of Child Restraint Systems by Use of Lower and Tether Anchorages (LATCH) 67
Top Tether Anchorages 72
1-8. SRS Airbag (Supplemental Restraint System Airbag) 75
General Precautions regarding SRS Airbag System 75
General Precautions regarding SRS Airbag System for Accessories and Any Objects 77
General Precautions regarding SRS Airbag System and Children 80
Components 82
SUBARU Advanced Frontal Airbag System, SRS Seat Cushion Airbag, SRS Side Airbag and SRS Curtain Airbag 84
SRS Side Airbag and SRS Curtain Airbag 98
SRS Airbag System Monitors 105
SRS Airbag System Servicing 106
Precautions against Vehicle Modification 107
How to Contact the Vehicle Manufacturer concerning Modifications for Persons with Disabilities That May Affect the Advanced Airbag System 108

1-1. Front Seats

WARNING

- **Never adjust the seat while driving, as it may cause loss of vehicle control and personal injury.**
- **Before adjusting the seat, make sure the hands and feet of rear seat passengers and cargo are clear of the adjusting mechanism.**
- **After adjusting the seat, move it back and forth to make sure it is securely locked. If the seat is not securely locked, it may move or the seatbelt may not operate properly.**
- **Do not put objects under the front seats. They may interfere with front seat locking and cause an accident.**
- **Seatbelts provide maximum restraint when the occupant sits well back and upright in the seat. To reduce the risk of sliding under the seatbelt in a collision, the front seatbacks should be always used in the upright position while the vehicle is running. If the front seatbacks are not used in the upright position in a collision, the risk of sliding under the lap belt and of the lap belt sliding up over the abdomen will increase, and both can result in serious internal injury or death.**
- **The SRS airbags deploy with considerable speed and force. Occupants who are out of proper position when the SRS airbag deploys could suffer very serious injuries. Because the SRS airbag needs enough space for deployment, the driver should always sit upright and well back in the seat as far from the steering wheel as practical while still maintaining full vehicle control and the front passenger should move the seat as far back as possible and sit upright and well back in the seat.**

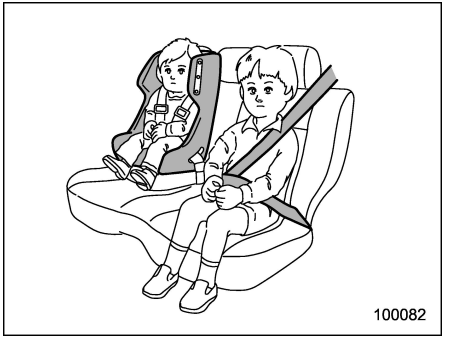

WARNING

Seat children in the rear seat properly restrained at all times. The SRS airbag deploys with considerable speed and force and can injure or even kill children, especially if they are not restrained or improperly restrained. Because children are lighter and weaker than adults, their risk of being injured from deployment is greater. For that reason, we strongly recommend that ALL children (including those in child restraint systems) sit in the REAR seat properly restrained at all times in a child restraint system or in a seatbelt, whichever is appropriate for the child's age, height and weight. Se-

cure ALL types of child systems in the REAR seats at all times.

NEVER INSTALL A CHILD RESTRAINT SYSTEM IN THE FRONT SEAT. DOING SO RISKS SERIOUS INJURY OR DEATH TO THE CHILD BY PLACING THE CHILD'S HEAD TOO CLOSE TO THE SRS AIRBAG.

According to accident statistics, children are safer when properly restrained in the rear seating positions than in the front seating positions. For instructions and precautions concerning child restraint systems, refer to "Child Restraint Systems" ☞P57.

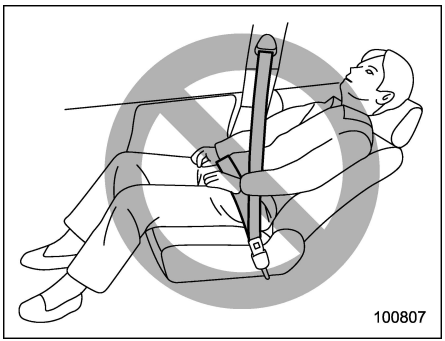

WARNING

To prevent the passenger from sliding under the seatbelt in the event of a collision, always put the seatback in the upright position while the vehicle is in motion. Also, do not place objects such as cushions between the passenger and the seatback. If you do so, the risk of sliding under the lap belt and of the lap belt sliding up over the abdomen will increase, and both can result in serious internal injury or death.

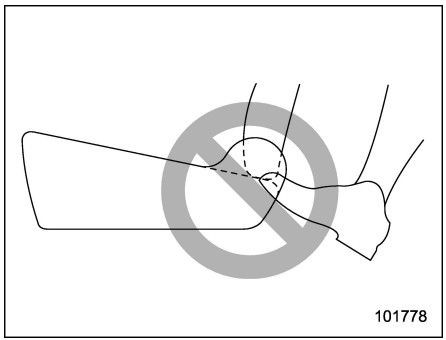

WARNING

Do not let rear passengers rest their feet between the front seatback and seat cushion. Doing so may lead to detective operation of the following systems and could result in serious injury.

- Occupant detection system
- SRS side airbag
- SRS seat cushion airbag
- Front seat heater (if equipped)
- Front seat ventilation (if equipped)
- Power seat (if equipped)

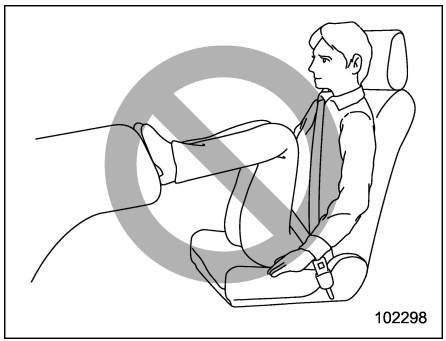

– CONTINUED –

WARNING

Do not press your feet onto the instrument panel. Doing so may prevent the occupant detection function of the SRS airbag system from functioning correctly, and may result in serious injury or death in the event of an accident.

WARNING

Seatbelts provide maximum restraint when the occupant sits well back and upright in the seat. Do not put cushions or any other materials between occupants and seatbacks or seat cushions. If you do so, the risk of sliding under the lap belt and of the lap belt sliding up over the abdomen will increase, and both can result in serious internal injury or death.

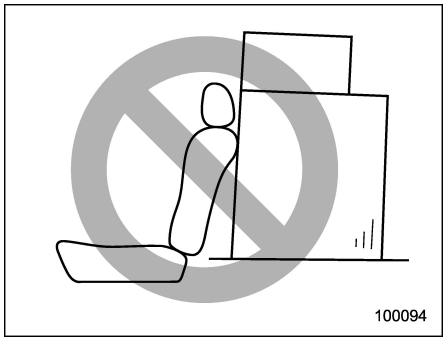

WARNING

Never stack luggage or other cargo higher than the top of the seatback because it could tumble forward and injure passengers in the event of a sudden stop or accident.

■ Manual Seat (If Equipped)

▼ Forward and backward adjustment

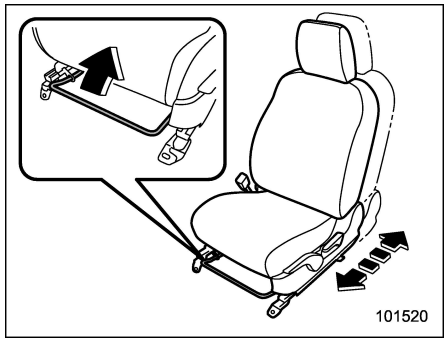

1. Sit in the seat to adjust.
2. Pull the lever upward, slide the seat to the desired position, and then release the lever.
3. Try to move the seat back and forth to make sure that it is securely locked into place.

▼ Reclining the seatback

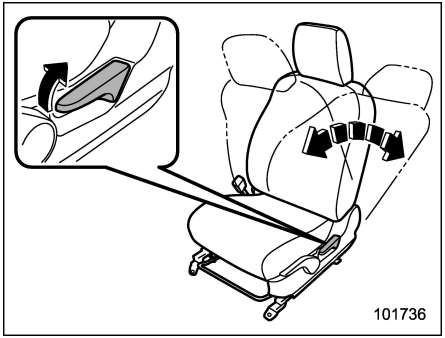

1. Pull up the reclining lever, adjust the seatback to the desired position, and then release the lever.
2. Make sure the seatback is securely locked into place.

The seatback placed in a reclined position can spring back upward with force when pulling up the lever. While operating the lever to return the seatback, hold the seatback lightly so that it may be raised back gradually.

▼ Seat cushion height adjustment (driver's seat)

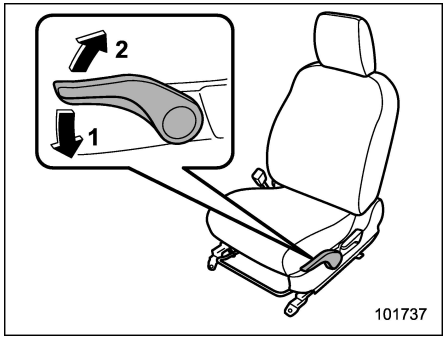

1) Push the lever down to lower the seat.
2) Pull the lever up to raise the seat.

You can adjust the height of the seat by moving the seat cushion adjustment lever up or down.

■ Power Seat (If Equipped)

▼ Driver's seat

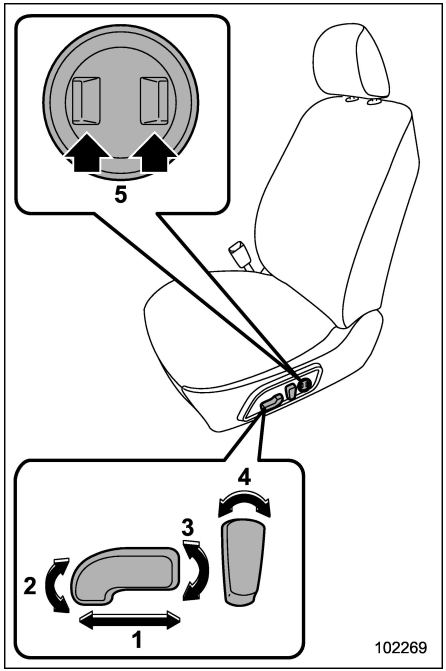

1) **Seat position forward/backward control switch**
To adjust the seat forward or backward, move the control switch forward or

– CONTINUED –

backward. During forward/backward adjustment of the seat, you cannot adjust the seat cushion angle or seat cushion height.

2) **Seat cushion angle control switch**
To adjust the seat cushion angle, pull up or push down the front end of the control switch.

3) **Seat height control switch**
To adjust the seat height, pull up or push down the rear end of the control switch.

4) **Seatback angle (reclining) control switch**
To adjust the angle of the seatback, move the control switch.

5) **Lumbar support control switch**
To increase lower back support, push the front side of the switch. To decrease lower back support, push the rear side of the switch.

▼ Front passenger's seat (if equipped)

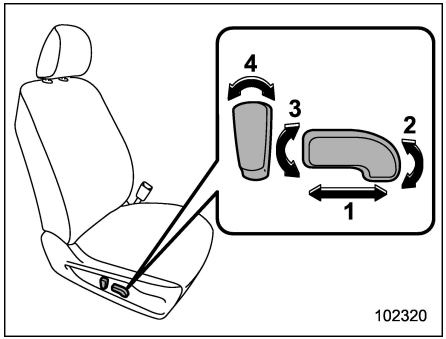

1) **Seat position forward/backward control switch**
To adjust the seat forward or backward, move the control switch forward or backward.

2) **Seat cushion angle control switch**
To adjust the seat cushion angle, pull up or push down the front end of the control switch.

3) **Seat height control switch**
To adjust the seat height, pull up or push down the rear end of the control switch.

4) **Seatback angle (reclining) control switch**
To adjust the angle of the seatback, move the control switch.

▼ Thigh extension (driver's seat – if equipped)

⚠ CAUTION

When the thigh extension is pulled out to its fullest, do not put weight on the top of it. Doing so could break the part.

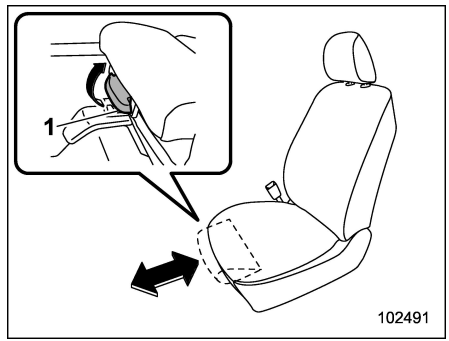

The seat front length can be adjusted.

Pull up the lever "1" to adjust the length and release the lever to lock it.

▼ **Power driver's seat with synchronized outside mirrors memory function (if equipped)**

⚠ WARNING

- **To avoid loss of vehicle control or personal injury, never perform the following operations while driving.**
  - **Adjusting the seat**
  - **Selecting a registered seat position**
- **Before adjusting the seat or selecting a registered seat position, make sure that cargo or the hands and feet of rear seat passengers are clear of the adjusting mechanism.**
- **The memory adjustment of the seat position is finished. Be sure to confirm that the select lever is in the "P" position, and the parking brake is applied, when adjusting the seat position. Do not drive until the utilizing of the seat position is complete.**
- **When any unusual conditions or malfunctions occur during the memory adjustment of the seat position, stop the memory adjustment of the seat position by performing any of the following procedures.**
  - **Operate any of the power seat switches.**
  - **Press the "SET" button.**
  - **Press button "1" or "2".**
  - **Operate the outside mirror control switch.**

Register the seat position with button "1" or "2" or each of the key fobs.

The following memory positions can be registered.

- Forward/backward position of the seat
- Angle of the seatback
- Angle of the seat cushion
- Height of the seat
- Angle of the outside mirrors
- Angle of the outside mirror angle on the passenger's side when the reverse tilt-down operates.

▽ **Registration of memory position with button "1" or "2"**

1. Adjust the seat and outside mirror positions under the following conditions.
   - The parking brake is applied.
   - The ignition switch is in the "ON" position.
   - The select lever is in the "P" position.

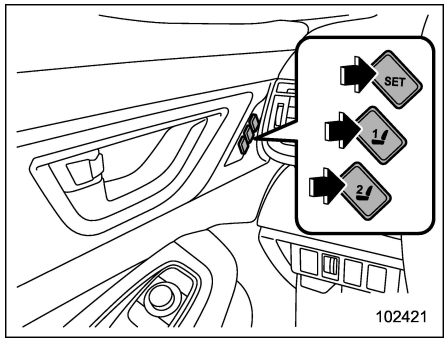

2. Register the adjusted positions by either of the following procedures.
   - Press the "SET" button, then press either "1" or "2" until a chirp sounds within 5 seconds.
   - While pressing and holding the "SET" button, press either "1" or "2" until a chirp sounds within 5 seconds.

A chirp will sound once, and the seat position and outside mirror angle on the passenger's side will be registered.

– CONTINUED –

▽ **Registration of the reverse tilt-down mirror angle with button "1" or "2"**

⚠ CAUTION

Depress the brake pedal when registering the reverse tilt-down mirror angle.

1. Move the select lever to the "R" position, then the outside mirror angle on the passenger's side will move to the reverse tilt-down position.
2. Adjust the outside mirror angle on the passenger's side. For details about the settings, refer to "Remote control mirror switch" ☞P264.
3. Move the select lever to the "P" position, then the outside mirror angle will return to its original position.
4. Register the adjusted positions by either of the following procedures.
   - Press the "SET" button, then press either "1" or "2" until a chirp sounds within 5 seconds.
   - While pressing and holding the "SET" button, press either "1" or "2" until a chirp sounds within 5 seconds.

A chirp will sound once, and the seat position and outside mirror angle on the passenger's side will be registered.

NOTE

- **Approximately 9 seconds after the select lever is moved to any position other than "R" position.**
- **The factory setting (default setting) for this function is set as the front passenger's side mirror. The setting of the driver's side mirror operation can be changed by a SUBARU dealer. Contact your SUBARU dealer for details.**

▽ **Registration of memory position with a access key fob (if equipped)**

1. Adjust the memory position under the following conditions.
   - The parking brake is applied.
   - The ignition switch is in the "LOCK"/"OFF" position.
   - The select lever is in the "P" position.

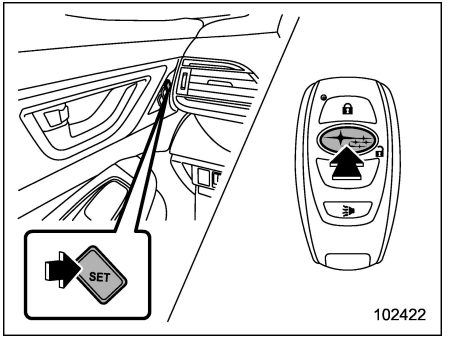

2. Hold the access key fob and press and hold the "SET" button. Then press the "🔒" button of the access key fob.

A chirp will sound once, and the memory position is registered.

▽ **Registration of the reverse tilt-down mirror angle with the key fob**

⚠ CAUTION

Depress the brake pedal when registering the reverse tilt-down mirror angle.

1. Move the select lever to the "R" position, then the outside mirror angle will move to the reverse tilt-down position.

2. Adjust the outside mirror angle. For details about the settings, refer to “Remote control mirror switch” ☞P264.

3. Move the select lever to the “P” position, then the outside mirror angle will return to its original position.

4. Turn the ignition switch to the “OFF”/ “LOCK” position.

5. Hold the access key fob and press and hold the “SET” button, then press the “🔒” button of the access key fob.

A chirp will sound once, and the reverse tilt-down mirror angle will be registered.

NOTE

- **Approximately 9 seconds after the select lever is moved to any position other than “R” position.**
- **The factory setting (default setting) for this function is set as the front passenger’s side mirror. The setting of the driver’s side mirror operation can be changed by a SUBARU dealer. Contact your SUBARU dealer for details.**
- **The system stores the adjusted mirror angle for approximately 45 seconds after the ignition switch is turned to the “OFF” position. Register the mirror angle while the memory function is available.**

▽ Utilizing of memory position registered with button “1” or “2”

⚠ WARNING

Be sure to press the correct button to retrieve your registered memory position. If the seat position is not optimum for you, it may adversely affect your driving and may reduce the effectiveness of the seatbelt. That could result in an accident involving serious injury or death.

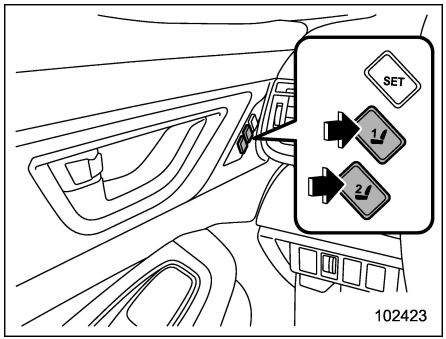

1. Turn the ignition switch to the “ON” position.

2. Put the select lever is in the “P” position and apply the parking brake. Then press button “1” or “2”.

A chirp will sound and the seat and angle of the outside mirrors moves to the registered position.

When the select lever is moved to the “R” position, the outside mirror will move to the registered reverse tilt-down position.

NOTE

- **A retrieved seat position might deviate as the function is used continuously over time.**
- **A retrieved seat position might deviate if you attempt to continue operating the registered seat in the same direction when the registered seat is already at the farthest possible point of adjustment in any direction.**
- **If a new position is registered to the same button, the previously registered memory position data will be deleted.**
- **If the vehicle battery is removed, the registered memory position data will not be deleted.**
- **When the button “1” or “2” is pressed within 45 seconds after the driver’s door is opened, the registered memory position can be retrieved even if the ignition switch is in the “LOCK” or “OFF” position.**

– CONTINUED –

▽ **Utilizing of the seat position registered with access key fob**

1. Hold the registered access key fob.

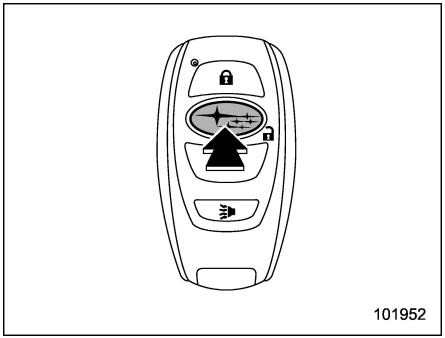

2. Unlock the driver's door by pressing the "🔓" button or gripping the door handle.
3. Open the driver's door.

A chirp sounds and the seat moves to the registered position.

When the select lever is moved to the "R" position, the outside mirror will move to the registered reverse tilt-down position.

NOTE

- **If the registered seat position cannot be retrieved after performing the previous procedures, try the following procedures.**
  (1) Press the "SET" button on the driver's door.
  (2) Press the "🔒" button on the access key fob or touch the door lock sensor to lock the doors.
  (3) Perform the prior procedures again.
- **If the keyless access function is disabled, the seat position cannot be retrieved by gripping the driver's door handle. However, the seat position can still be retrieved by pressing the "🔓" button on the access key fob. For information about how to enable/disable the keyless access function, refer to "Disabling Keyless Access Function" ☞P125.**
- **If a new position is registered for the same access key fob, the previously registered seat position is deleted.**

▽ **Clearing the registered seat position with access key fob**

1. Close the driver's door.
2. While holding the access key fob and pressing the "SET" button, press the "🔒" button on the access key fob.

A chirp will sound, and the registered seat position will be cleared.

■ Head Restraint Adjustment

⚠ WARNING

- **Never drive the vehicle with the head restraints removed because they are designed to reduce the risk of serious neck injury in the event that the vehicle is struck from the rear. Also, never install the head restraints the opposite way round. Doing so will prevent the head restraints from functioning as intended. Therefore, when you remove the head restraints, you must reinstall all head restraints correctly to protect vehicle occupants.**
- **All occupants, including the driver, should not operate a vehicle or sit in a vehicle's seat until the head restraints are placed in their proper positions in order to minimize the risk of neck injury in the event of a crash.**
- **The front seat head restraints are designed to be installed into the front seats only. The rear seat head restraints are designed to be installed into the rear seats**

only. Do not attempt to install the front seat head restraints into the rear seats, or the rear seat head restraints into the front seats.

Both the driver's seat and front passenger's seat are equipped with head restraints. Both head restraints are adjustable in the following ways.

▼ Head restraint height adjustment

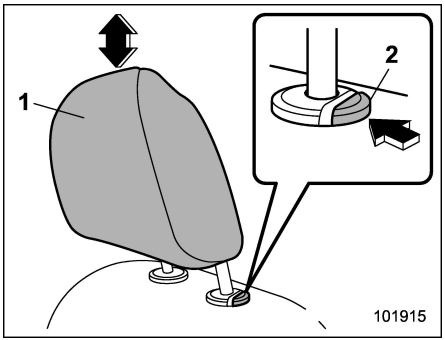

1) Head restraint
2) Release button

To raise:

Pull the head restraint up.

To lower:

Push the head restraint down while pressing the release button on the top of the seatback.

To remove:

While pressing the release button, pull out the head restraint.

To install:

Install the head restraint into the holes that are located on the top of the seatback until the head restraint locks. Press and hold the release button to lower the head restraint.

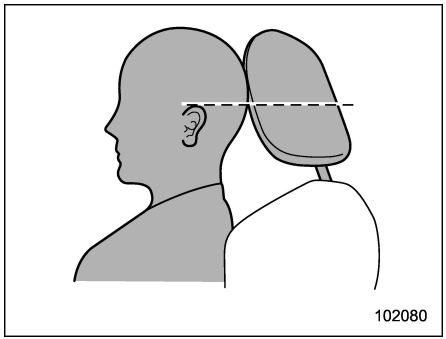

Each head restraint should be adjusted so that the center of the head restraint is closest to the top of the occupant's ears.

NOTE

It is not possible to remove or install the head restraint without reclining the front seatback. Reclining the front seatback and then remove or install the head restraint.

▼ Head restraint angle adjustment

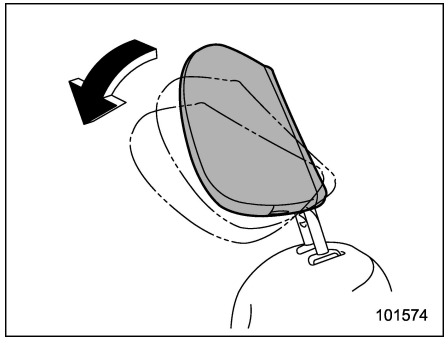

The angle of the head restraint can be adjusted in several steps. While maintaining a suitable driving posture, adjust the head restraint to a position where the back of your head is as close to the head restraint as possible.

To tilt:

Tilt the head restraint by hand to the preferred position. A click will be audible when the head restraint is locked.

To return:

Tilt the head restraint once as far forward as it can go. The head restraint will automatically return to the fully upright position. Then, adjust the head restraint again to the preferred angle.

1-2. Seat Heater (If Equipped)

The seat heater operates when the ignition switch is in the “ON” position.

CAUTION

- **Do not put hard or heavy objects or ones with protrusions on the seat, and do not stab the seat with sharp objects, such as pins or needles.**
- **People with delicate skin may suffer slight burns even at low temperatures if they use the seat heater for a long period of time. When using the heater, always be sure to warn the persons concerned.**
- **Do not put anything on the seat which insulates against heat, such as a blanket, cushion, or similar items. This may cause the seat heater to overheat.**
- **When the seat is warmed enough or before you leave the vehicle, be sure to turn off the seat heater.**

NOTE

- **Use of the seat heater for a long period of time while the engine is not running can cause battery discharge.**
- **When using for a long period of time, we recommend setting the heater to the MID or LOW position. Use the HIGH position for only quick heating at the start of the function usage.**

■ Front Seat Heater

Adjust the front seat heater function on the center information display. Refer to “Front Seat Heater” ☞P284.

NOTE

The front seat heater function cannot be used simultaneously with the seat ventilation (if equipped).

■ Rear Seat Heater

CAUTION

Do not open and close the center console lid while operating the rear seat heater switch. There is the risk of fingers being caught in the lid.

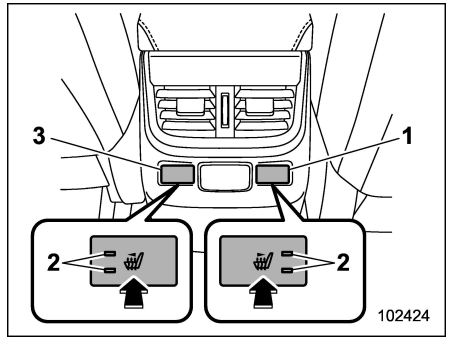

Rear seat heater switches
1) Front passenger’s side
2) Indicator light
3) Driver’s side

Press the rear seat heater switch. Each time you press the switch, the mode will change as follows.

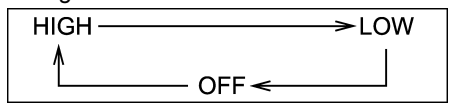

HIGH:
2 indicator lights are illuminated.
LOW:
1 indicator light is illuminated.
OFF:
All indicator lights turn off.

Selecting “HIGH” mode will cause the seat

to heat up quicker.

NOTE

Only the front seat heater switches retain the previous switch position even if the vehicle has restarted. The rear seat switch will reset.

1-3. Seat Ventilation (If Equipped)

The seat ventilation are equipped in the front seats.

The seat ventilation operate when the ignition switch is in the “ON” position.

CAUTION

- **Do not put hard or heavy objects or ones with protrusions on the seat, and do not stab the seat with sharp objects, such as pins or needles.**
- **When cleaning the seat, do not use organic solvents, such as thinner, benzene, or alcohol.**
- **If water or liquid is spilled on the seat, wipe it off with a dry cloth immediately.**

NOTE

- **Use of the seat ventilation for a long period of time while the engine is not running can cause battery discharge.**
- **The seat ventilation function cannot be used simultaneously with the front seat heater.**
- **When using for a long period of time, we recommend setting the seat ventilation to the MID or LOW position. Use the HIGH position for only quick cooling at the start of the function usage.**

Adjust the seat ventilation function on the center information display. Refer to “Front Seat Ventilation” ☞P284.

1-4. Rear Seats

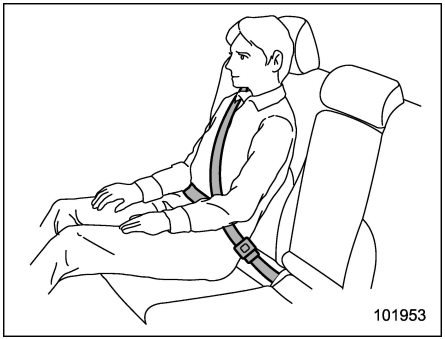

WARNING

Seatbelts provide maximum restraint when the occupant sits well back and upright in the seat. Do not put cushions or any other materials between occupants and seatbacks or seat cushions. If you do so, the risk of sliding under the lap belt and of the lap belt sliding up over the abdomen will increase, and both can result in serious internal injury or death.

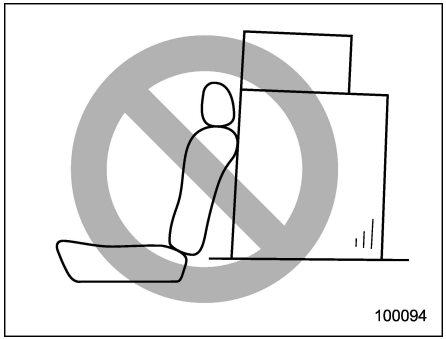

WARNING

Never stack luggage or other cargo higher than the top of the seatback because it could tumble forward and injure passengers in the event of a sudden stop or accident.

■ Reclining the Seatback (Outback)

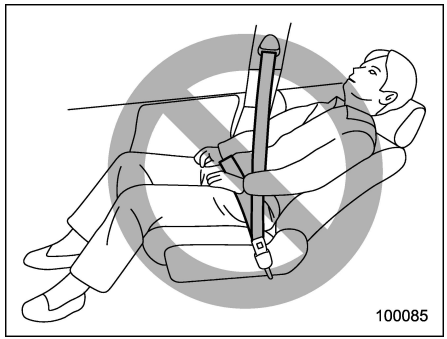

WARNING

To prevent the passenger from sliding under the seatbelt in the event of a collision, always put the seatback in the upright position while the vehicle is in motion.

CAUTION

If the vehicle is equipped with a cargo area cover, observe the following precautions.

- **Be careful not to pinch your hand between the headrest and the**

cargo area cover when you recline the rear seat.

- **Move the front cover of the cargo area cover backward so that the cover is not damaged by the reclined seatback. Refer to "Lifting Cargo Cover (Outback – If Equipped)" ☞P308.**

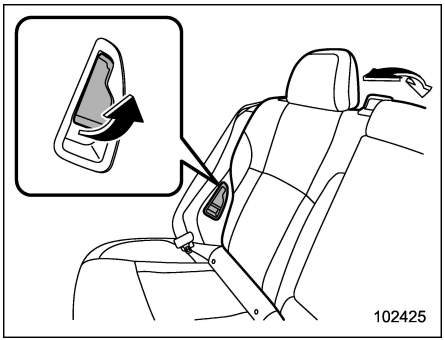

Adjust the seatback to the desired position while pulling the lever.

After adjusting the seatback, release the lever and make sure the seatback is securely locked into place.

■ Folding Down the Rear Seatback

⚠ WARNING

- **When you fold down the seatback, check that there are no passengers or objects on the rear seat. Not doing so creates a risk of injury or property damage if the seatback suddenly folds down.**
- **Never allow passengers to ride on the folded rear seatback or in the cargo area or trunk. Doing so may result in serious injury or death.**
- **Secure all objects and especially long items properly to prevent them from being thrown around inside the vehicle and causing serious injury during a sudden stop, a sudden steering maneuver or a rapid acceleration.**
- **When you return the seatback to its original position, shake the seatback slightly to confirm that it is securely fixed in place. If the seatback is not securely fixed in place, the seatback may suddenly fold down in the event of sudden braking, or objects may move out from the cargo area, which could cause serious injury or death.**

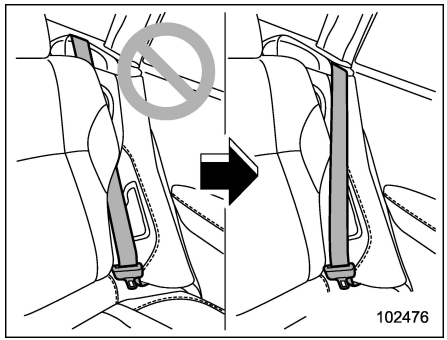

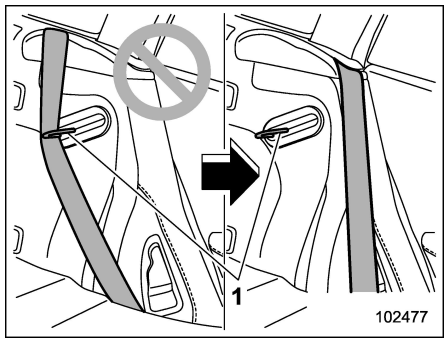

1) Striker plate

– CONTINUED –

⚠ WARNING

When the seatback is returned to its original position, observe the following precautions. Failure to do so may lead to serious injury or an accident because the operation efficiency of the seatbelt is inhibited.

- **The seatbelt should not be caught in the seatback and it should be fully visible.**
- **The seatbelt should not pass behind the striker plate for the seatback.**

⚠ CAUTION

For Outback, the rear seatback may fold down quickly due to the internal spring. Hold the seatback while pulling the release lever to slow it down.

▼ Folding down the rear seatback (Legacy)

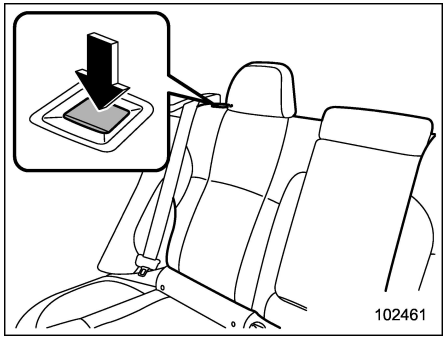

Release button

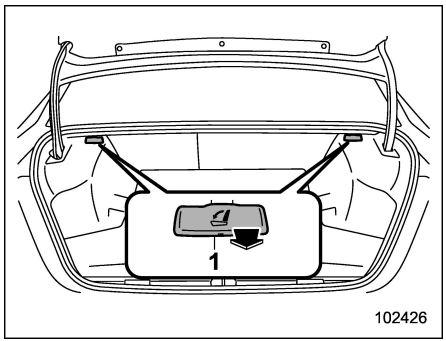

1) Release lever (if equipped)

Unlock the seatback by performing either of the following procedures and then fold the seatback down.

- Push the release button.
- Pull the release lever.

▼ Folding down the rear seatback (Outback)

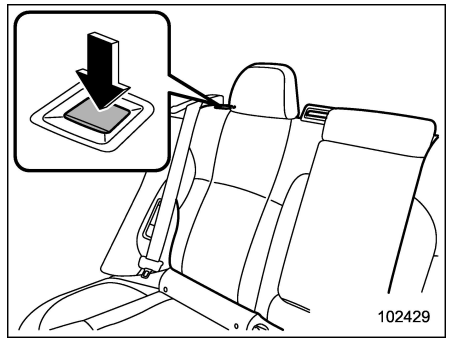

Release button

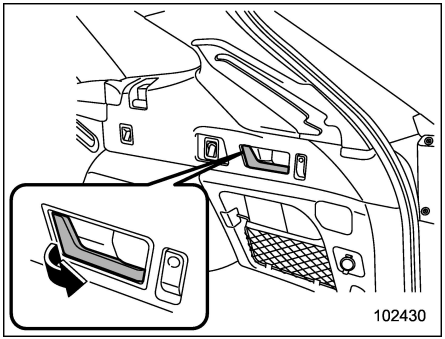

Release lever

Folding the seatback by performing either of the following procedures.

- Push the release button.
- Pull the release lever.

▼ **Return the rear seatback**

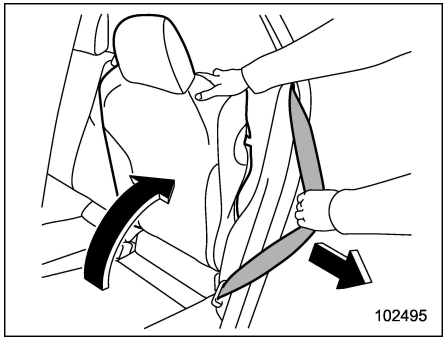

WARNING

When returning the seatback to its original position, observe the following precaution.

Failure to observe the precaution may damage the seatbelt, impairing its effectiveness, and possibly result in a serious injury.

- **When returning the seatback to its original position, pull the seatbelt out towards the vehicle exterior so that it will not be caught between the seatback and the trim.**

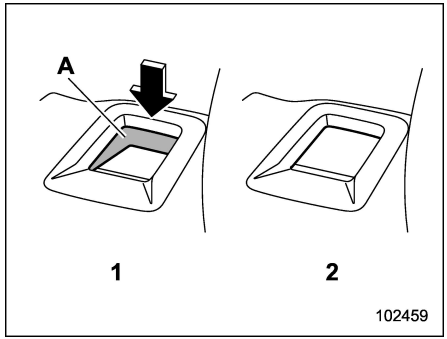

Lock release button

1) Unlocked
2) Locked
A) Unlocking marker in red

To return the seatback to its original position, raise the seatback until it locks into place and make sure that the unlocking marker on the lock release button is no longer visible.

WARNING

When you return the seatback to its original position, check that the unlocking marker on the lock release button is not visible. Also, shake the seatback slightly to confirm that it is securely fixed in place. If the seatback is not securely fixed in place, the seatback may suddenly

– CONTINUED –

fold down in the event of sudden braking, or objects may move out from the cargo area, which could cause serious injury or death.

■ Head Restraint Adjustment

Both the rear window side seats and the rear center seat are equipped with head restraints.

⚠ WARNING

- **Never drive the vehicle with the head restraints removed because they are designed to reduce the risk of serious neck injury in the event that the vehicle is struck from the rear. Therefore, when you remove the head restraints, you must reinstall all head restraints to protect vehicle occupants.**
- **All occupants, including the driver, should not operate a vehicle or sit in a vehicle's seat until the head restraints are placed in their proper positions in order to minimize the risk of neck injury in the event of a crash.**
- **The front seat head restraints are designed to be installed into the front seats only. The rear seat head restraints are designed to be installed into the rear seats only. Do not attempt to install the front seat head restraints into the rear seats, or the rear seat head restraints into the front seats.**

▼ Rear window side seating position

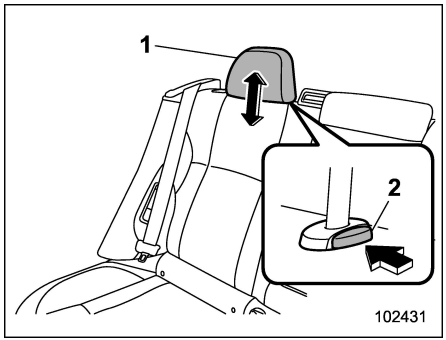

1) Head restraint
2) Release button

To raise:

Pull the head restraint up.

To lower:

Push the head restraint down while pressing the release button on the top of the seatback.

To remove:

While pressing the release button, pull out the head restraint.

To install:

Install the head restraint into the holes that are located on the top of the seatback until the head restraint locks.

The head restraint should be adjusted so that the center of the head restraint is closest to the top of the occupant's ears.

When the seats are not occupied, lower the head restraints to improve rearward visibility.

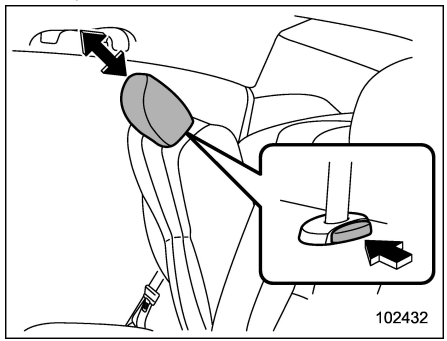

NOTE

For Legacy, it is not possible to remove or install the head restraint without folding down the rear seatback. Fold down the rear seatback and then re-

move or install the head restraint.

▼ **Rear center seating position**

⚠ CAUTION

The head restraint is not intended to be used in the retracted position. Before sitting on the seat, raise the head restraint to the extended position.

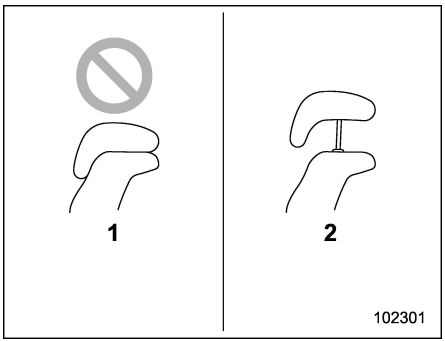

1) When not used (retracted position)
2) When used (extended position)

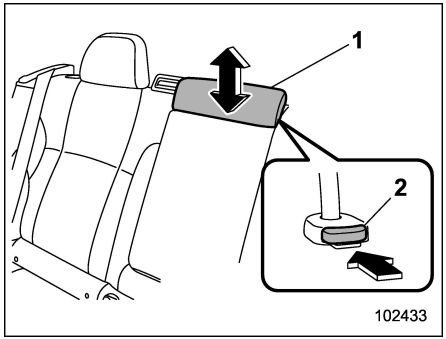

1) Head restraint
2) Release button

To raise:

Pull the head restraint up.

To lower:

Push the head restraint down while pressing the release button on the top of the seatback.

To remove:

While pressing the release button, pull out the head restraint.

To install:

Install the head restraint into the holes that are located on the top of the seatback until the head restraint locks.

When the rear center seating position is occupied, raise the head restraint to the extended position. When the rear center seating position is not occupied, lower the head restraint to improve rearward visibility.

■ Armrest

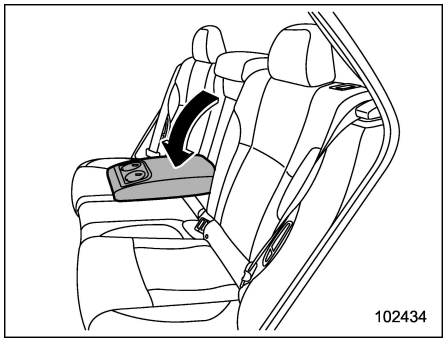

To lower the armrest, pull on the armrest's top edge.

⚠ WARNING

To avoid serious injury and vehicle damage, passengers must never be allowed to sit on the center armrest.

1-5. Seatbelts

■ Seatbelt Safety Tips

⚠ WARNING

- **All persons in the vehicle should fasten their seatbelts BEFORE the vehicle starts to move. Otherwise, the possibility of serious injury becomes greater in the event of a sudden stop or accident.**
- **All belts should fit snugly in order to provide full restraint. Loose fitting belts are not as effective in preventing or reducing injury.**
- **Each seatbelt is designed to support only one person. Never use a single belt for two or more persons – even children. Otherwise, in an accident, serious injury or death could result.**
- **Replace all seatbelt assemblies including retractors and attaching hardware worn by occupants of a vehicle that has been in a serious accident. The entire assembly should be replaced even if damage is not obvious.**
- **Seat children in the rear seat properly restrained at all times. The SRS airbag deploys with considerable speed and force and can injure or even kill children, especially if they are not restrained or improperly restrained. Because children are lighter and weaker than adults, their risk of being injured from deployment is greater. For that reason, we strongly recommend that ALL children (including those in child restraint systems) sit in the REAR seat properly restrained at all times in a child restraint system or in a seatbelt, whichever is appropriate for the child's height and weight. Secure ALL types of child restraint systems in the REAR seats at all times.**

  NEVER INSTALL A CHILD RESTRAINT SYSTEM IN THE FRONT SEAT. DOING SO RISKS SERIOUS INJURY OR DEATH TO THE CHILD BY PLACING THE CHILD'S HEAD TOO CLOSE TO THE SRS AIRBAG.

  According to accident statistics, children are safer when properly restrained in the rear seating positions than in the front seating positions. For instructions and precautions concerning the child restraint system, refer to "Child Restraint Systems" ☞P57.

This vehicle is equipped with a crash sensing and diagnostic module, which will record the use of the seatbelt by the front passenger when any of the SRS frontal, side and curtain airbags deploys.

▼ Infants or small children

Use a child restraint system that is suitable for this vehicle. Refer to "Child Restraint Systems" ☞P57.

▼ Children

If a child is too big for a child restraint system, the child should sit in the rear seat and be restrained using the seatbelts. According to accident statistics, children are safer when properly restrained in the rear seating positions than in the front seating positions. Never allow a child to stand up or kneel on the seat.

If the shoulder portion of the belt crosses the face or neck, move the child closer to the belt buckle to help provide a good shoulder belt fit. Care must be taken to securely place the lap belt as low as possible on the hips and not on the child's waist. If the shoulder portion of the belt

cannot be properly positioned, a child restraint system should be used. Never place the shoulder belt under the child's arm or behind the child's back.

▼ **Expectant mothers**

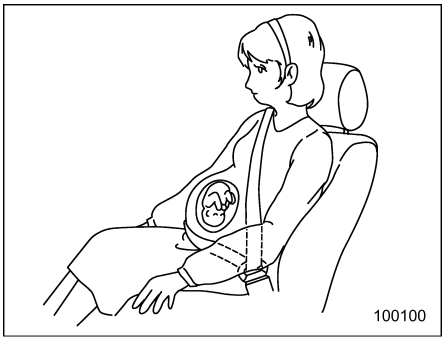

Expectant mothers also need to use the seatbelts. They should consult their doctor for specific recommendations. The lap belt should be worn securely and as low as possible over the hips, not over the waist.

■ Emergency Locking Retractor (ELR)

The driver's seatbelt has an Emergency Locking Retractor (ELR).

The emergency locking retractor allows normal body movement but the retractor locks automatically during a sudden stop, impact or if you pull the belt very quickly out of the retractor.

■ Automatic Locking Retractor/ Emergency Locking Retractor (ALR/ELR)

Each passenger's seatbelt has an Automatic Locking Retractor/Emergency Locking Retractor (ALR/ELR). The Automatic Locking Retractor/Emergency Locking Retractor normally functions as an Emergency Locking Retractor (ELR). The ALR/ELR has an additional locking mode, "Automatic Locking Retractor (ALR) mode", intended to secure a child restraint system.

The ALR mode functions as follows.

When the seatbelt is once drawn out completely and is then retracted even slightly, the retractor locks the seatbelt in that position and the seatbelt cannot be extended. As the belt is rewinding, clicks will be heard which indicate the retractor functions as an ALR. When the seatbelt is retracted fully, the ALR mode is canceled and the ELR mode is restored.

When securing a child restraint system on the rear seats by using a seatbelt, the seatbelt must be changed over to the Automatic Locking Retractor (ALR) mode. For instructions on how to install the child restraint system using a seatbelt, refer to "Installing Child Restraint Systems with ALR/ELR Seatbelt" ☞P62.

When the child restraint system is removed, make sure that the retractor is restored to the Emergency Locking Retractor (ELR) mode by allowing the seatbelt to retract fully.

■ Seatbelt Warning Light and Chime

Refer to "Seatbelt Warning Light and Chime" ☞P175.

■ Fastening the Seatbelt

⚠ WARNING

- **Never use a belt that is twisted or reversed. In an accident, this can increase the risk or severity of injury.**
- **Keep the lap belt as low as possible on your hips. In a collision, this spreads the force of the lap belt over stronger hip bones instead of across the weaker abdomen.**
- **Seatbelts provide maximum restraint when the occupant sits well back and upright in the seat.**

– CONTINUED –

To reduce the risk of sliding under the seatbelt in a collision, the front seatbacks should be always used in the upright position while the vehicle is running. If the front seatbacks are not used in the upright position in a collision, the risk of sliding under the lap belt and of the lap belt sliding up over the abdomen will increase, and both can result in serious internal injury or death.

- **Do not put cushions or any other materials between occupants and seatbacks or seat cushions. If you do so, the risk of sliding under the lap belt and of the lap belt sliding up over the abdomen will increase, and both can result in serious internal injury or death.**

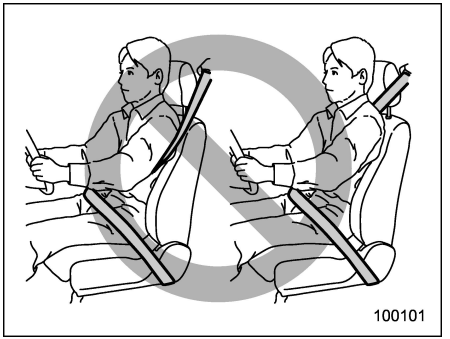

WARNING

Never place the shoulder belt under the arm or behind the back. If an accident occurs, this can increase the risk or severity of injury.

CAUTION

Metallic parts of the seatbelt can become very hot in a vehicle that has been closed up in sunny weather; they could burn an occupant. Do not touch such hot parts until they cool.

▼ Front seatbelts

1. Adjust the seat position:

Driver's seat: Adjust the seatback to the upright position. Move the seat as far from the steering wheel as practical while still maintaining full vehicle control.

Front passenger's seat: Adjust the seatback to the upright position. Move the seat as far back as possible.

2. Sit well back in the seat.
3. Pick up the tongue plate and pull the belt out slowly. Do not let it get twisted.
   - If the belt stops before reaching the buckle, return the belt slightly and pull it out more slowly.
   - If the belt still cannot be unlocked, let the belt retract slightly after giving it a strong pull, then pull it out slowly again.

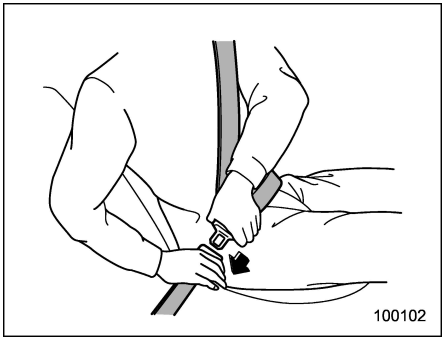

4. Insert the tongue plate into the buckle until you hear a click.

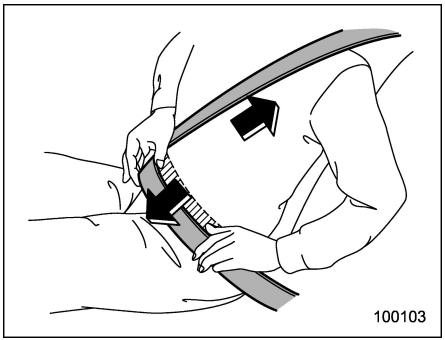

5. To make the lap part tight, pull up on the shoulder belt.
6. Place the lap belt as low as possible on your hips, not on your waist.

▽ Adjusting the front seat shoulder belt anchor height

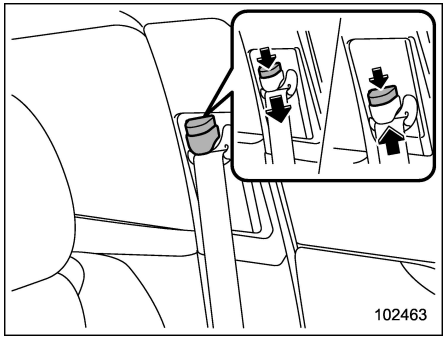

The shoulder belt anchor height should be adjusted to the position best suited for the driver/front passenger. Always adjust the anchor height so that the shoulder belt passes over the middle of the shoulder without touching the neck.

To raise:
Push and hold the upper part of the anchor and slide the anchor up.
To lower:
Push and hold the upper part of the anchor and slide the anchor down.

Pull down the anchor to make sure that it is locked in place.

⚠ WARNING

When wearing the seatbelts, make sure the shoulder portion of the webbing does not pass over your neck. If it does, adjust the seatbelt anchor to a lower position. Placing the shoulder belt over the neck may result in neck injury during sudden braking or in a collision.

▽ Unfastening the seatbelt

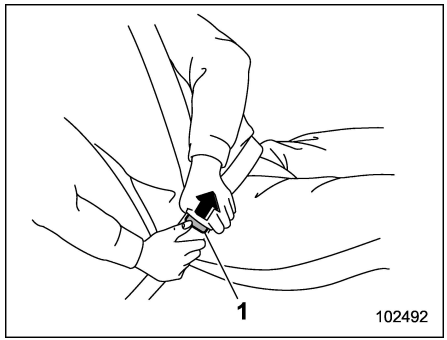

1) Button

1. Push the button on the buckle.
2. Have the seatbelt retracted slowly to avoid the seatbelt being tangled or twisted.

Before closing the door, make sure that the

– CONTINUED –

belts are retracted properly to avoid catching the belt webbing in the door.

▼ **Rear seatbelts (except rear center seatbelt on Outback)**

1. Sit well back in the seat.
2. Pick up the tongue plate and pull the belt out slowly. Do not let it get twisted.
   - If the belt stops before reaching the buckle, return the belt slightly and pull it out more slowly.
   - If the belt still cannot be unlocked, let the belt retract slightly after giving a strong pull on it, then pull it out slowly again.

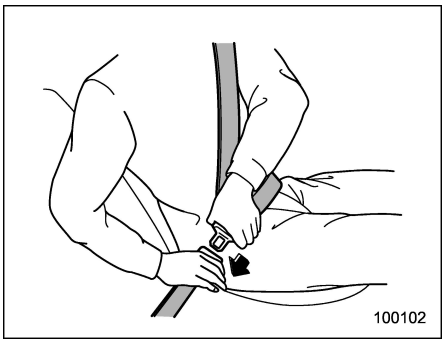

3. Insert the tongue plate into the buckle until you hear a click.

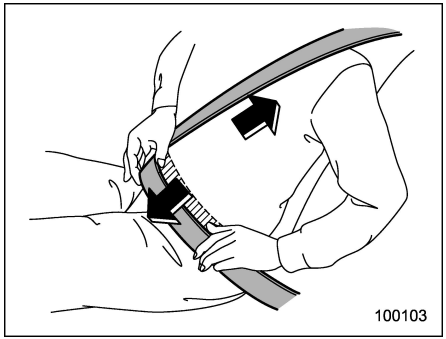

4. To make the lap part tight, pull up on the shoulder belt.
5. Place the lap belt as low as possible on your hips, not on your waist.

▽ **Unfastening the seatbelt**

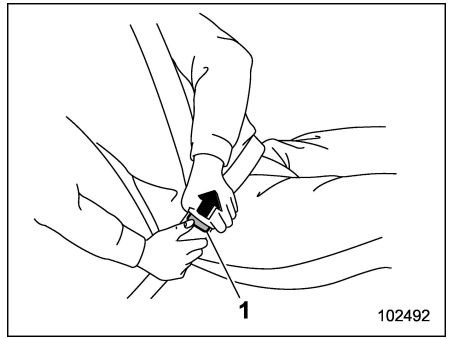

1) Button

1. Push the button on the buckle.
2. Have the seatbelt retracted slowly to avoid the seatbelt being tangled or twisted.

Before closing the door, make sure that the belts are retracted properly to avoid catching the belt webbing in the door.

▼ **Rear center seatbelt on Outback**

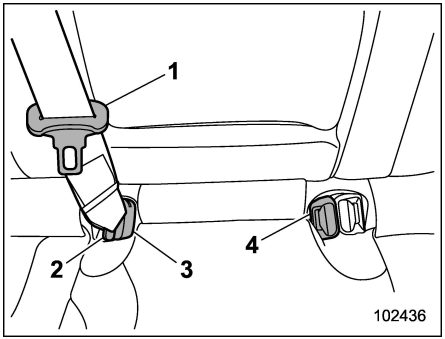

1) Center seatbelt tongue plate
2) Connector (tongue)
3) Connector (buckle)
4) Center seatbelt buckle

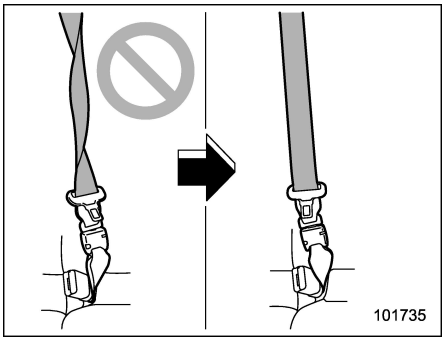

⚠ WARNING

Fastening the seatbelt with the webbing twisted can increase the risk or severity of injury in an accident. When fastening the belt after it is pulled out from the retractor, especially when inserting the connector (tongue) into the mating buckle (on right-hand side), always check that the webbing is not twisted.

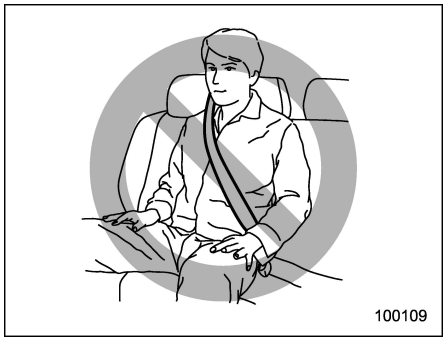

⚠ WARNING

Be sure to fasten both tongue plates to the respective buckles. If the seatbelt is used only as a shoulder belt (with the connector (tongue) not fastened to the connector (buckle) on the right-hand side), it cannot properly restrain the wearer in position in an accident, possibly resulting in serious injury or death.

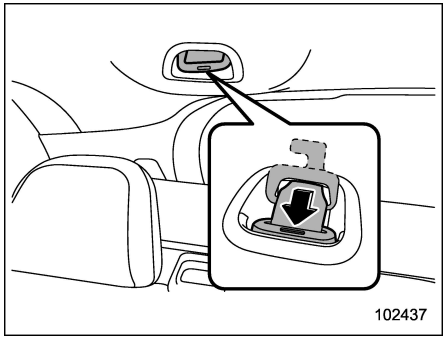

Rear center seatbelt is stowed in the recess of the ceiling.

1. Retrieve the connector (tongue) from the slot in the recess by pulling the connector (tongue).

– CONTINUED –

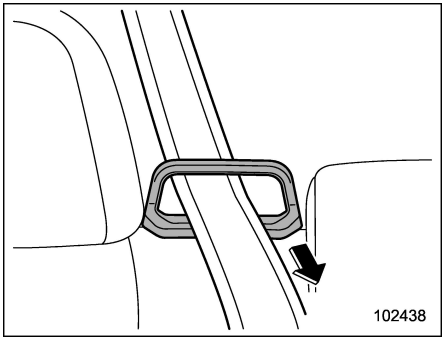

2. Pass the seatbelt through the belt guide.

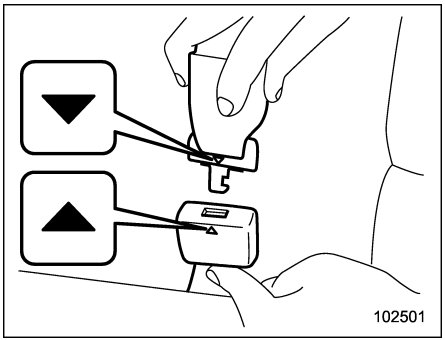

3. Make sure that the "▼" mark on the connector (tongue) and the "▲" mark on the buckle face outwards.

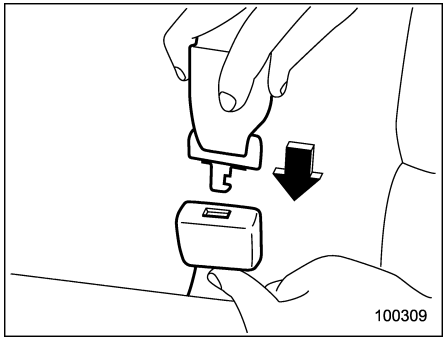

4. After confirming that the webbing is not twisted, insert the connector (tongue) attached at the webbing end into the buckle on the right-hand side until a click is heard.

- If the belt stops before reaching the buckle, return the belt slightly and pull it out more slowly.
- If the belt still cannot be unlocked, let the belt retract slightly after giving it a strong pull, then pull it out slowly again.

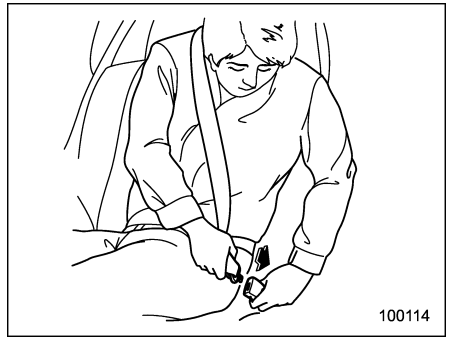

5. Insert the center seatbelt tongue plate into the center seatbelt buckle until it clicks.

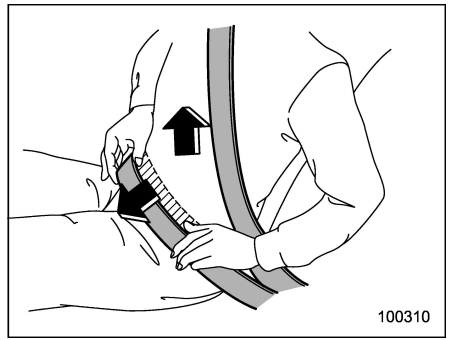

6. To make the lap part tight, pull up on the shoulder belt. And place the lap belt as low as possible on your hips, not on your

waist.

▽ **Unfastening the seatbelt**

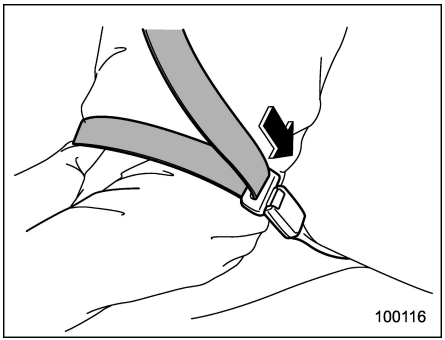

1. Push the release button of the center seatbelt buckle (on the left-hand side) to unfasten the seatbelt.

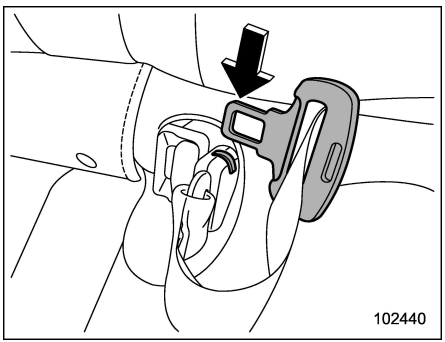

2. Insert a tongue plate or other hard pointed object into the slot in the connector (buckle) on the right-hand side and push it in. The connector (tongue) will then disconnect from the buckle.

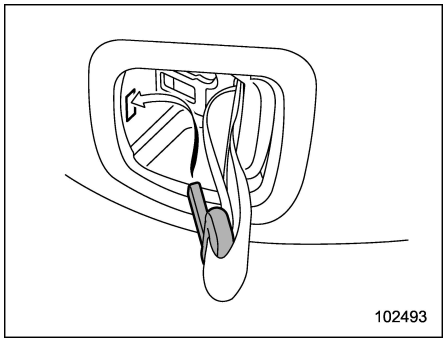

3. Allow the retractor to roll up the belt. You should hold the webbing end and guide it back into the retractor while it is rolling up. Neatly store the tongue plate in the recess and then insert the connector (tongue) into the slot.

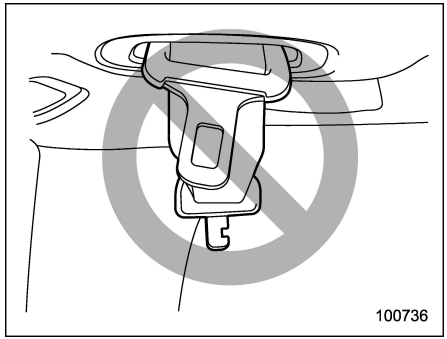

⚠ CAUTION

Observe the following precautions. Otherwise, the tongue plate can hit against the trim, causing damage to the trim.

- **Do not allow the retractor to roll up the seatbelt too quickly.**
- **Have the seatbelt fully rolled up so that the tongue plates are neatly stored.**

■ Seatbelt Maintenance

To clean the seatbelts, use a mild soap and lukewarm water. Never bleach or dye the belts because this could seriously affect their strength.

– CONTINUED –

Inspect the seatbelts and attachments including the webbing and all hardware periodically for cracks, cuts, gashes, tears, damage, loose bolts or worn areas. Replace the seatbelts even if only minor damage is found.

CAUTION

- **Keep the belts free of polishes, oils, chemicals and particularly battery acid.**
- **Never attempt to make modifications or changes that will prevent the seatbelt from operating properly.**

1-6. Seatbelt Pretensioners

The following seatbelts have a seatbelt pretensioner.

- Driver's seatbelt
- Front passenger's seatbelt
- Rear passenger's seatbelt (window-side)

The seatbelt pretensioners are designed to be activated in the event of an accident involving a moderate to severe frontal and side collision and rollover accident.

WARNING

- **To obtain maximum protection, the occupants should sit in an upright position with their seatbelts properly fastened. Refer to "Seatbelts" ☞P46.**
- **Do not modify, remove or strike the seatbelt retractor assemblies equipped with seatbelt pretensioners or surrounding area. This could result in accidental activation of the seatbelt pretensioners or could make the system inoperative, possibly resulting in serious injury. Seatbelt pretensioners have no user-serviceable parts. For required servicing of seatbelt retractors equipped with seatbelt pretensioners, consult your SUBARU dealer.**
- **When discarding seatbelt retractor assemblies equipped with seatbelt pretensioners or scrapping the entire vehicle due to collision damage or for other reasons, consult your SUBARU dealer.**

NOTE

- **Seatbelt pretensioners are not designed to activate in minor impacts or in rear impacts.**
- **Pretensioners are designed to function on a one-time-only basis. In the event that a pretensioner is activated, both the driver's and front passenger's seatbelt retractor assemblies should be replaced only by an authorized SUBARU dealer. When replacing seatbelt retractor assemblies, use only genuine SUBARU parts.**
- **If a seatbelt that has a seatbelt pretensioner does not retract or cannot be pulled out due to a malfunction or activation of the pretensioner, contact your SUBARU dealer as soon as possible.**
- **If the seatbelt retractor assembly or**

surrounding area has been damaged, contact your SUBARU dealer as soon as possible.

- **When you sell your vehicle, we urge you to inform the buyer that the vehicle is equipped with seatbelt pretensioners. Also, notify the buyer of the contents in this section.**

■ Seatbelt with Shoulder Belt Pretensioner

NOTE

This section is applicable to the following components.

- **Front passenger's seatbelt**
- **Rear passenger's seatbelt (window-side)**

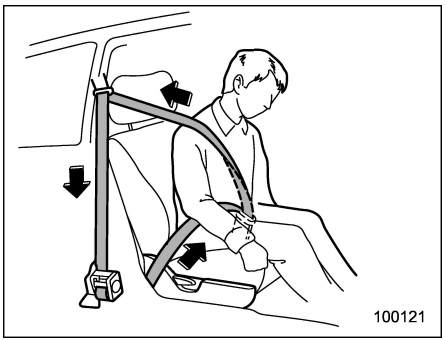

The pretensioner sensor also serves as follows.

- SRS frontal airbag sensor
- Side impact sensor
- Front door impact sensor
- Rollover sensor

If the sensor detects a certain predetermined amount of force during frontal or side collisions or rollover accidents, any seatbelt that has a seatbelt pretensioner is quickly drawn back in by the retractor to take up the slack so that the belt more effectively restrains the seat occupant.

The rear passenger's seatbelt (window-side) pretensioner includes a tension reducing device which limits the peak forces exerted by the seatbelt on the occupant in the event of a collision.

The front passenger's seatbelt pretensioner includes a tension reducing device which limits the peak forces exerted by the seatbelt on the occupant in the event of a collision. The adaptive force limiter will select a reducing load to suit the body size of the occupant as detected by the occupant detection sensor.

When a seatbelt pretensioner is activated, an operating noise will be heard and a small amount of smoke will be released. These occurrences are normal and not harmful. This smoke does not indicate a fire in the vehicle.

Once the seatbelt pretensioner has been activated, the seatbelt retractor remains locked. Consequently, the seatbelt can not be pulled out and retracted and therefore must be replaced.

■ Seatbelt with Shoulder Belt and Lap Belt Pretensioners

NOTE

This section is applicable to the following components.

- **Driver's seatbelt**

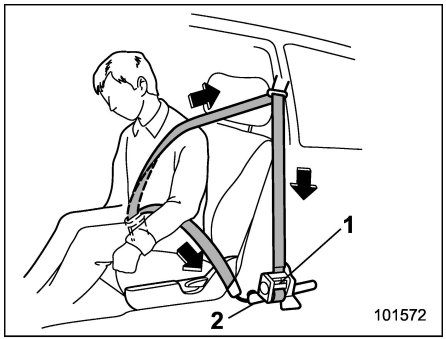

1) Seatbelt retractor assembly (shoulder belt pretensioner and adaptive force limiter)
2) Lap belt pretensioner

– CONTINUED –

The shoulder belt pretensioner is supplemented by a lap belt pretensioner, which is located at the base of the center pillar. Like the shoulder belt pretensioner, the lap belt pretensioner instantaneously pulls in the belt to eliminate slack if a certain level of frontal collision force is detected. As a result, the seatbelt restrains the front seat occupant more effectively.

The driver's seatbelt pretensioner includes a tension reducing device which limits the peak forces exerted by the seatbelt on the occupant in the event of a collision.

The adaptive force limiter will select a reducing load to the suit body size of occupant as detected by the occupant detection sensor.

When a seatbelt pretensioner is activated, an operating noise will be heard and a small amount of smoke will be released. These occurrences are normal and not harmful. This smoke does not indicate a fire in the vehicle.

Once the seatbelt pretensioner has been activated, the seatbelt pretensioner remains locked. Consequently, the seatbelt cannot be pulled out and retracted and therefore must be replaced.

■ System Monitors

A diagnostic system continually monitors the readiness of the seatbelt pretensioner with the ignition switch in the "ON" position. The seatbelt pretensioners share the control module with the SRS airbag system. Therefore, if any malfunction occurs in a seatbelt pretensioner, the SRS airbag system warning light will illuminate. For details, refer to "SRS Airbag System Monitors" ☞P105.

■ System Servicing

⚠ WARNING

- **When discarding a seatbelt retractor assembly or scrapping the entire vehicle damaged by a collision, consult your SUBARU dealer.**
- **Tampering with or disconnecting the system's wiring could result in accidental activation of the seatbelt pretensioner and/or SRS airbag or could make the system inoperative, which may result in serious injury. Do not use electrical test equipment on any circuit related to the seatbelt pretensioner and SRS airbag systems. For required servicing of the seatbelt pretensioner, consult your nearest SUBARU dealer.**

⚠ CAUTION

For the locations of the sensors and control modules, refer to "Components" ☞P82.

If you need service or repair in those areas or near the front seatbelt retractors, have the work performed by your authorized SUBARU dealer.

NOTE

If the front or side part of the vehicle is damaged in an accident to the extent that the seatbelt pretensioner does not operate, contact your SUBARU dealer as soon as possible.

■ Precautions against Vehicle Modification

Always consult your SUBARU dealer if you want to install any accessory parts to your vehicle.

CAUTION

Do not perform any of the following modifications. Such modifications can interfere with proper operation of the seatbelt pretensioners.

- **Attachment of any equipment (bush bar, winches, snow plow, skid plate, etc.) other than genuine SUBARU accessory parts to the front end.**
- **Modification of the suspension system or front end structure.**
- **Installation of a tire of different size and construction from the tires specified on the vehicle placard attached to the driver's door pillar or specified for individual vehicle models in this Owner's Manual.**

1-7. Child Restraint Systems

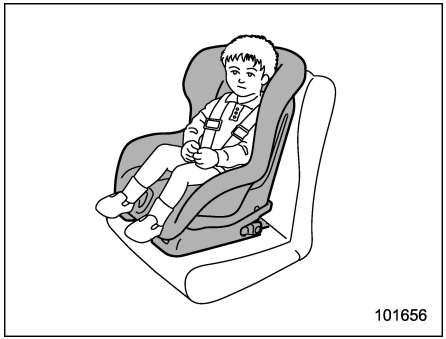

Infants and small children should always be placed in an infant or child restraint system in the rear seat while riding in the vehicle.

You should use an infant or child restraint system that meets Federal Motor Vehicle Safety Standards or Canada Motor Vehicle Safety Standards, is compatible with your vehicle and is appropriate for the child's age and size.

All child restraint systems are designed to be secured in vehicle seats by lap belts or the lap belt portion of a lap/shoulder belt (except those described in "Installation of Child Restraint Systems by Use of Lower and Tether Anchorages (LATCH)" ☞P67).

Children could be endangered in an accident if their child restraint systems are not properly secured in the vehicle. When installing the child restraint system, carefully follow the manufacturer's instructions.

According to accident statistics, children are safer when properly restrained in the rear seating positions than in the front seating positions.

All U.S. states and Canadian provinces require that infants and small children be restrained in an approved child restraint system at all times while the vehicle is moving.

– CONTINUED –

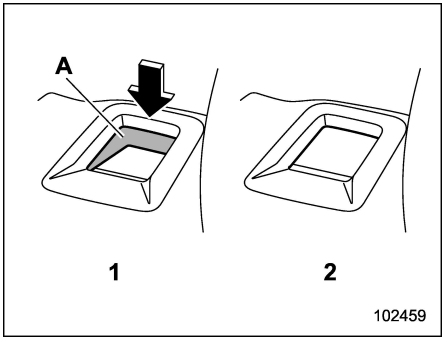

Lock release button
1) Unlocked
2) Locked
A) Unlocking marker in red

WARNING

- **Before installing a child restraint system, be sure to confirm that the seatback is securely locked into place. Otherwise, in an accident, serious injury or death could result.**
- **Do not leave children in the car unattended. High interior temperatures may cause heat stroke and dehydration that result in serious injury or death.**

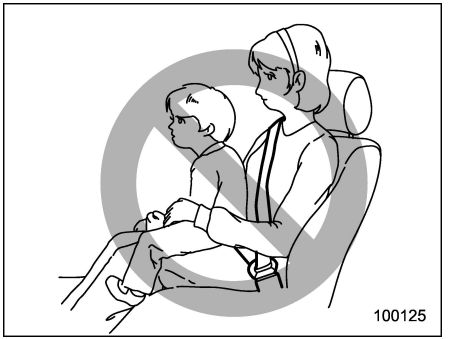

WARNING

Never let a passenger hold a child on his or her lap or in his or her arms while the vehicle is moving. The passenger cannot protect the child from injury in a collision, because the child will be caught between the passenger and objects inside the vehicle. Additionally, holding a child in your lap or arms in the front seat exposes that child to another serious danger. Since the SRS airbag deploys with considerable speed and force, the child could be injured or even killed.

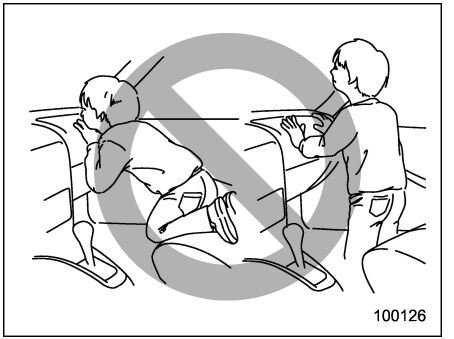

WARNING

Children should be properly restrained at all times. Never allow a child to stand up, or to kneel on any seat. Unrestrained children will be thrown forward during sudden stop or in an accident and can be injured seriously.

Additionally, children standing up or kneeling on or in front of the front seat are exposed another serious danger. Since the SRS airbag deploys with considerable speed and force, the child could be injured or even killed.

Safety Tips for Installing Child Restraint Systems

WARNING

- **Do not use a seat belt extender. If a seat belt extender is used when installing a child restraint system, the seat belt will not securely hold the child restraint system. Use of a seat belt extender could cause death or serious injury to children or other passengers in sudden braking, swerving, or accidents.**
- **Attach the child restraint system to the anchors properly. When using the LATCH anchors, be sure that there are no foreign objects around the anchors. Also, the seat belts should not be caught behind the child restraint system. Make sure the child restraint system is securely attached. Otherwise it may cause death or serious injury to children or other passengers in sudden braking, swerving, or accidents.**
- **Child restraint systems and seatbelts can become hot in a vehicle that has been closed up in sunny weather; they could burn a small child. Check the child restraint system before you place a child in it.**
- **Do not leave an unsecured child restraint system in your vehicle. Unsecured child restraint systems can be thrown around inside of the vehicle in a sudden stop, turn or accident; they can strike and injure vehicle occupants as well as result in serious injuries or death to the child.**

CAUTION

When you install a child restraint system, follow the manufacturer's instructions supplied with it. After installing the child restraint system, check to ensure that it is held securely in position. If it is not held tight and secure, the danger of your child suffering personal injury in the event of an accident may be increased.

Where to Place a Child Restraint System

The following descriptions are SUBARU's recommendations on where to place a child restraint system in your vehicle.

WARNING

- **Several types of child restraint systems may conceal the buckle of the neighboring seat. If the occupant of the neighboring seat cannot correctly fasten the seatbelt, that person must move to a different seat. If the seatbelt cannot be correctly fastened, there is the risk of serious injury or death in the event of sudden braking or a collision.**
- **If the child restraint system cannot be correctly installed because it contacts the driver's seat, move the child restraint system to a different seat. If it cannot be installed in a different seat (other than the driver's seat), adjust the front seat so that contact does not occur.**

– CONTINUED –

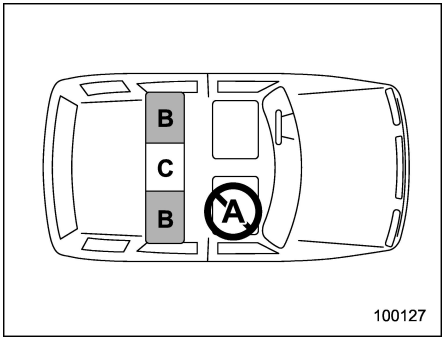

A: Front passenger's seat

You should not install a child restraint system (including a booster seat) due to the hazard to children posed by the passenger's airbag.

B: Rear seat, window-side seating positions

Recommended positions for all types of child restraint systems.

In these positions, the following equipment is provided for installing a child restraint system.

- Automatic Locking Retractor/Emergency Locking Retractor (ALR/ELR) seatbelts
- Lower anchorages (bars)
- Upper anchorages (tether anchorages)

Some types of child restraint systems might not be able to be secured firmly due to projection of the seat cushion.

In this seating position, you should use only a child restraint system that has a bottom base that fits snugly against the contours of the seat cushion and can be securely retained using the seatbelt.

C: Rear seat, center seating position (U.S. spec models)

In this position, the following equipment is provided for installing a child restraint system.

- ALR/ELR seatbelts
- Lower anchorages (bars)
- Top tether anchorages

Some types of child restraint systems might not be able to be secured firmly due to projection of the seat cushion.

In this seating position, you should use only a child restraint system that has a bottom base that fits snugly against the contours of the seat cushion and can be securely retained using the seatbelt.

The rear center seat includes lower anchorages, and the lower anchorages on the center side of the rear right seat can be used to install a child restraint system.

When a child restraint system is installed in the rear center seat using the lower anchorages, do not sit in the rear right seat.

If a child restraint system is not correctly fixed in place (for example, if a child restraint system can be moved more than 1 inch (2.5 cm) from side to side), the child restraint system should be moved to a window seat position of the rear seat.

C: Rear seat, center seating position (other models)

In this position, the following equipment is provided for installing a child restraint system.

- ALR/ELR seatbelts
- Top tether anchorages

Some types of child restraint systems might not be able to be secured firmly due to projection of the seat cushion.

In this seating position, you should use only a child restraint system that has a bottom base that fits snugly against the contours of the seat cushion and can be securely retained using the seatbelt.

When you install a child restraint system in the rear seat's center seating position, raise the center head restraint.

Lower anchorages (bars) for window-side seating positions may be used for a seat in the center seating position if a child restraint system manufacturer's instruc-

tions permit and specify using anchors as far apart as those in this vehicle.

If a child restraint system is not correctly fixed in place (for example, if a child restraint system can be moved more than 1 inch (2.5 cm) from side to side), you should install the child restraint system in a rear seat, window-side seating position.

WARNING

- **Even with advanced airbags, children can be seriously injured by the airbag. Seat children in the rear seat properly restrained at all times. The SRS airbag deploys with considerable speed and force and can injure or even kill children, especially if they are not restrained or improperly restrained. Because children are lighter and weaker than adults, their risk of being injured from deployment is greater.**

  For that reason, be sure to secure ALL types of child restraint systems in the REAR seats at all times. You should choose a restraint device which is appropriate for the child's age, height and weight. According to accident statistics, children are safer when properly restrained in the rear seating positions than in the front seating positions.
- **Do not use lower anchorages (bars) for a seat in the center seating position unless a child restraint system manufacturer's instructions permit and specify using anchors spaced as far apart as those in this vehicle.**
- **Do not connect two or more lower hooks onto the same anchorage (bar).**

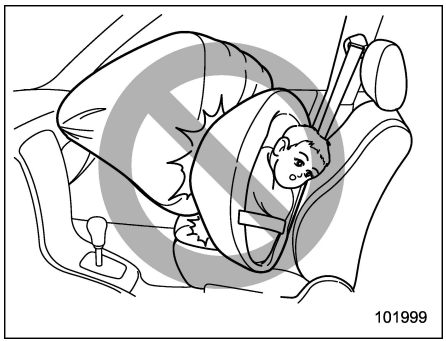

WARNING

- **SINCE YOUR VEHICLE IS EQUIPPED WITH A PASSENGER'S SRS AIRBAG, NEVER INSTALL A CHILD SAFETY SEAT IN THE FRONT PASSENGER'S SEAT. DOING SO RISKS SERIOUS INJURY OR DEATH TO THE CHILD BY PLACING THE CHILD'S HEAD TOO CLOSE TO THE SRS AIRBAG.**
- **Do not allow children to lean their heads or any other parts of their bodies against the door or the area of the seat, front and rear pillars or roof side rails. The SRS side airbags and SRS curtain airbags deploy even if children are seated in the child restraint system. It will be dangerous if the SRS side airbags and SRS curtain airbags inflate. The impact could cause death or serious injury to the child.**
- **To secure the child restraint system, be sure to comply with all installation instructions provided by the child restraint manufacturer. Not doing so could result in death or serious injury to children in a sudden stop or accident.**

– CONTINUED –

Choosing a Child Restraint System

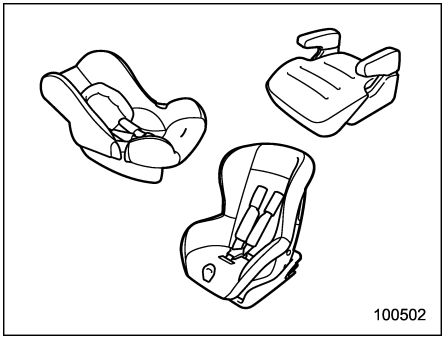

Choose a child restraint system that is appropriate for the child's age and size (weight and height) in order to provide the child with proper protection. The child restraint system should meet all applicable requirements of Federal Motor Vehicle Safety Standards for the United States or of Canada Motor Vehicle Safety Standards for Canada. It can be identified by looking for the label on the child restraint system or the manufacture's statement of compliance in the document attached to the system. Also it is important for you to make sure that the child restraint system is compatible with the vehicle in which it will be used.

Installing Child Restraint Systems with ALR/ELR Seatbelt

CAUTION

- **When you install a child restraint system, follow the manufacturer's instructions supplied with it. After installing the child restraint system, check to ensure that it is held securely in position. If it is not held tight and secure, the danger of your child suffering personal injury in the event of an accident may be increased.**
- **When installing a child restraint system in the rear center seating position, set both seatbacks to the original position. Otherwise, the child restraint system cannot be securely restrained, which may result in death or serious injuries in the event of sudden stop, sudden steering maneuver or an accident.**

▼ Installing a rearward facing child restraint system

WARNING

- **NEVER INSTALL A CHILD SEAT IN THE FRONT SEAT. DOING SO RISKS SERIOUS INJURY OR DEATH TO THE CHILD BY PLACING THE CHILD'S HEAD TOO CLOSE TO THE SRS AIRBAG.**
- **Before installing a child restraint system, be sure to confirm that the seatback is securely locked into place. Otherwise, in an accident, serious injury or death could result.**

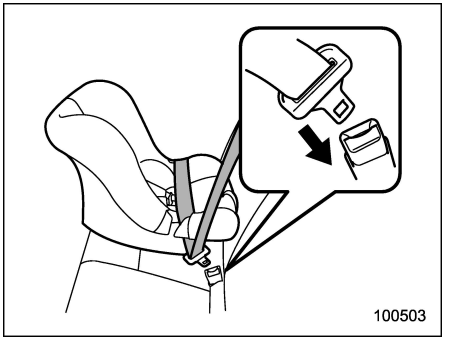

1. Move the seatback back and forth to

confirm that it is securely locked into place.

– Check that the red colored unlocking marker on the lock release button is not visible. For details, refer to “Folding Down the Rear Seatback” ☞P41.

2. Place the child restraint system in the rear seating position.

WARNING

When you intend to install a child restraint system in the rear center seating position, if the child restraint system does not fit snugly against the contours of the rear center seat cushion, install the child restraint system in the window-side seating position to be safe. For details, refer to “Where to Place a Child Restraint System” ☞P59.

3. Run the lap and shoulder belt through or around the child restraint system following the instructions provided by its manufacturer.

4. Insert the tongue plate into the buckle until you hear a click.

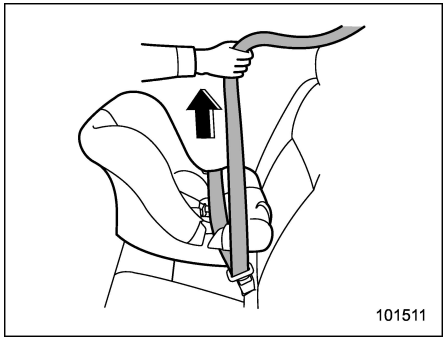

5. Take up the slack in the lap belt.

6. If using the seatbelt in the ALR mode is recommended by the manufacturer’s instructions supplied with the child restraint system, perform the following procedure.

(1) Pull out the seatbelt fully from the retractor to change the retractor over from the Emergency Locking Retractor (ELR) to the Automatic Locking Retractor (ALR) mode.

(2) Allow the belt to rewind into the retractor. As the belt is rewinding, clicks will be heard which indicate the retractor functions as ALR.

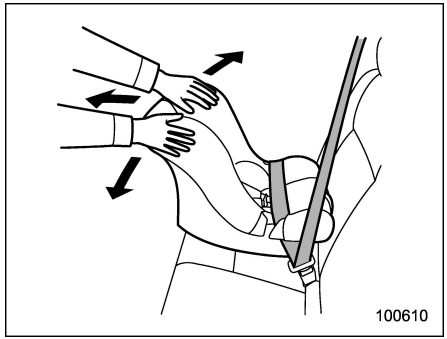

7. Push and pull the child restraint system forward and side to side to check that it is firmly secured in the center of the seat. Sometimes a child restraint system can be more firmly secured by pushing it down into the seat cushion and then tightening the seatbelt.

8. If the seatbelt has been set to the ALR mode in step 5, pull at the shoulder portion of the belt to confirm that it cannot be pulled out (ALR properly functioning).

– CONTINUED –

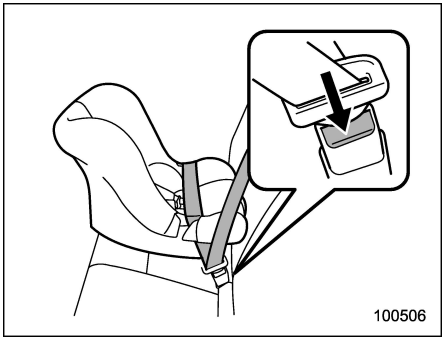

9. To remove the child restraint system, press the release button on the seatbelt buckle and allow the belt to retract completely. The belt will return to the ELR mode.

NOTE

When the child restraint system is no longer in use, remove it and restore the ELR function of the retractor. That function is restored by allowing the seatbelt to retract fully.

▼ Installing a forward facing child restraint system

⚠ WARNING

- **NEVER INSTALL A CHILD RESTRAINT SYSTEM IN THE FRONT PASSENGER'S SEAT. DOING SO RISKS SERIOUS INJURY OR DEATH TO THE CHILD BY PLACING THE CHILD'S HEAD TOO CLOSE TO THE SRS AIRBAG.**
- **Before installing a child restraint system, be sure to confirm that the seatback is securely locked into place. Otherwise, in an accident, serious injury or death could result.**

1. Move the seatback back and forth to confirm that it is securely locked into place.
   – Check that the red colored unlocking marker on the lock release button is not visible. For details, refer to "Folding Down the Rear Seatback" ☞P41.
2. If the child restraint system makes contact with the head restraint of the rear seating position where the child restraint system is to be installed, raise the head restraint to the extended position. If the child restraint system still makes contact, remove the head restraint. For details, refer to "Head Restraint Adjustment" ☞P44.

⚠ CAUTION

Store the head restraint that has been removed in the trunk (Legacy) or cargo area (Outback). Do not place the head restraint in the passenger compartment to prevent it from being thrown around in the passenger compartment in a sudden stop or a sharp turn.

3. For Outback models, adjust the seat back to the upright position.
4. Place the child restraint system in the rear seating position.

⚠ WARNING

When you intend to install a child restraint system on the rear center seating position, if the child restraint system does not fit snugly against the contours of the rear center seat cushion, install the child restraint system on the window-side seating position to be safe. For details, refer to "Where to Place a Child Restraint System" ☞P59.

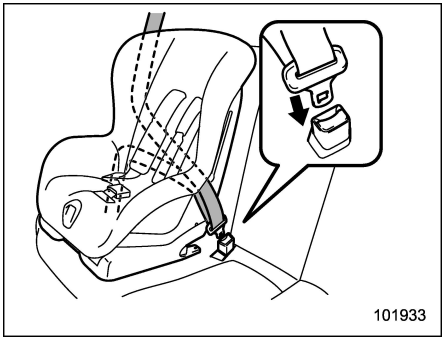

5. Run the lap and shoulder belt through or around the child restraint system following the instructions provided by its manufacturer.

– When a child restraint system is installed in the rear center seating position of an Outback, pass the rear center seatbelt through the belt guide properly. For details, refer to “Rear center seatbelt on Outback” ☞P51.

6. Insert the tongue plate into the buckle until you hear a click.

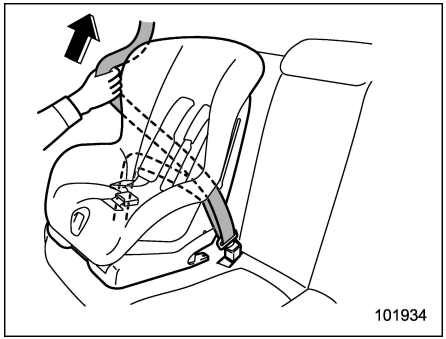

7. Take up the slack in the lap belt.

8. Pull out the seatbelt fully from the retractor to change the retractor over from the Emergency Locking Retractor (ELR) to the Automatic Locking Retractor (ALR) function. Then, allow the belt to rewind into the retractor. As the belt is rewinding, clicks will be heard which indicate the retractor functions as ALR.

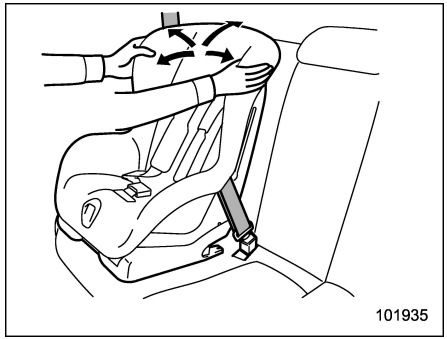

9. Before having a child sit in the child restraint system, try to move it back and forth and right and left to check if it is firmly secured. Sometimes a child restraint system can be more firmly secured by pushing it down into the seat cushion and then tightening the seatbelt.

10. Pull at the shoulder portion of the belt to confirm that it cannot be pulled out (ALR properly functioning).

– CONTINUED –

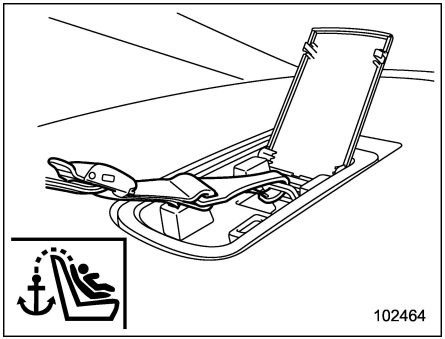

Legacy

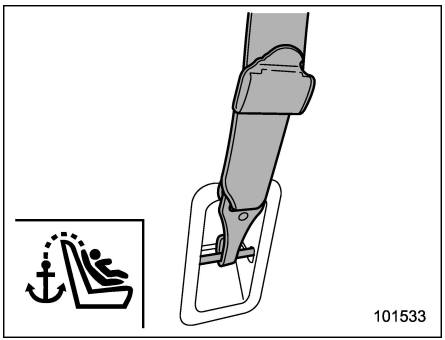

Outback

11. Latch the top tether hook onto the tether anchorage that is located behind the rear seat and tighten the top tether firmly. For additional instructions, refer to “Top Tether Anchorages” ☞P72.

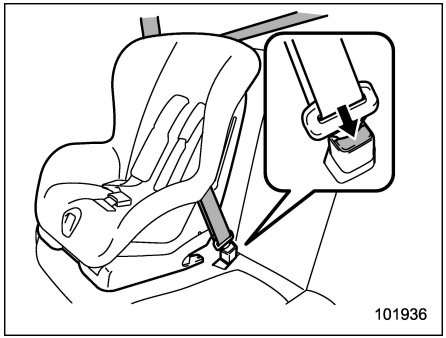

12. To remove the child restraint system, press the release button on the seatbelt buckle and allow the belt to retract completely. The belt will return to the ELR mode.

Remember that the head restraint is not intended to be used at the lowest position (retracted position). Therefore, when the rear center seat is occupied (including when a child restraint system is installed), be sure to raise the head restraint to the extended position.

NOTE

When the child restraint system is no longer in use, remove it and restore the ELR function of the retractor. That function is restored by allowing the seatbelt to retract fully.

■ Installing a Booster Seat

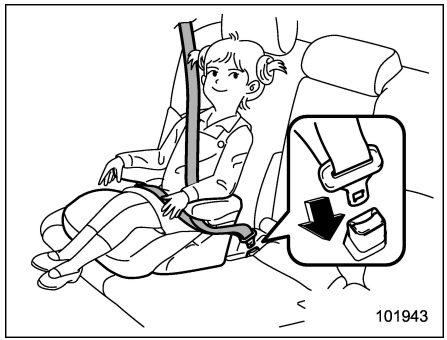

1. Place the booster seat in the rear seating position and sit the child on it. The child should sit well back on the booster seat.
2. Run the lap and shoulder belt through or around the booster seat and the child following the instructions provided by its manufacturer.
3. Insert the tongue plate into the buckle until you hear a click. Take care not to twist the seatbelt.

Make sure the shoulder belt is positioned across the center of child’s shoulder and that the lap belt is positioned as low as possible on the child’s hips.

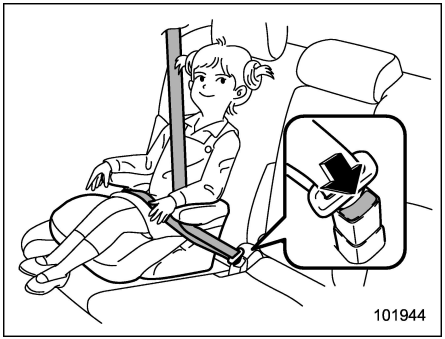

4. To remove the booster seat, press the release button on the seatbelt buckle and allow the belt to retract.

WARNING

- **Never use a belt that is twisted or reversed. In an accident, this can increase the risk or severity of injury to the child.**
- **Never place the shoulder belt under the child's arm or behind the child's back. If an accident occurs, this can increase the risk or severity of injury to the child.**
- **The seatbelt should fit snugly in order to provide full restraint. Loose fitting belts are not as effective in preventing or reducing injury.**
- **Place the lap belt as low as possible on the child's hips. A high-positioned lap belt will increase the risk of sliding under the lap belt and of the lap belt sliding up over the abdomen, and both can result in serious internal injury or death.**
- **Make sure the shoulder belt is positioned across the center of child's shoulder. Placing the shoulder belt over the neck may result in neck injury during sudden braking or in a collision.**

Installation of Child Restraint Systems by Use of Lower and Tether Anchorages (LATCH)

▼ **Lower and tether anchorages**

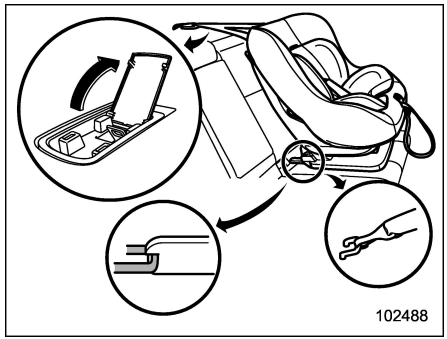

Legacy

– CONTINUED –

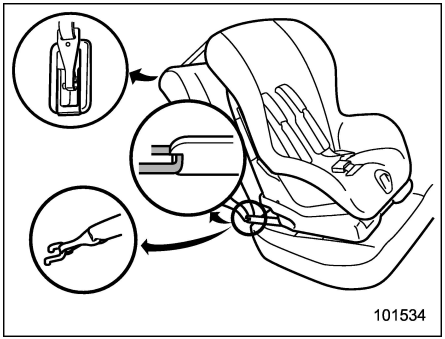

Outback

⚠ WARNING

Attach the child restraint system to the anchors properly. When using the LATCH anchors, be sure that there are no foreign objects around the anchors. Also, the seat belts should not be caught behind the child restraint system. Make sure the child restraint system is securely attached. Otherwise it may cause death or serious injury to children or other passengers in sudden braking, swerving, or accidents.

Some types of child restraint systems can be installed on the rear seat of your vehicle without use of the seatbelts. Such child restraint systems are secured to the dedicated anchorages provided on the vehicle body.

The lower and tether anchorages are sometimes referred to as the LATCH system (**L**ower **A**nchors and **T**ethers for **CH**ildren).

Your vehicle is equipped with five lower anchorages (bars) (U.S. spec models) four lower anchorages (bars) (other models) and three upper anchorages (tether anchorages) for accommodating such child restraint systems.

▽ Lower anchorages

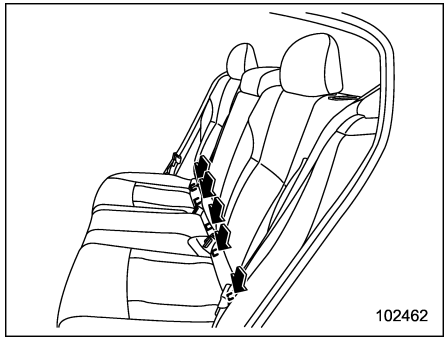

U.S. spec. models

There are a total of 5 lower anchorages at the rear seat. The rear anchorage from the right side is used for both the right seat and center seat. Each lower anchorage is located where the seat cushion meets the seatback.

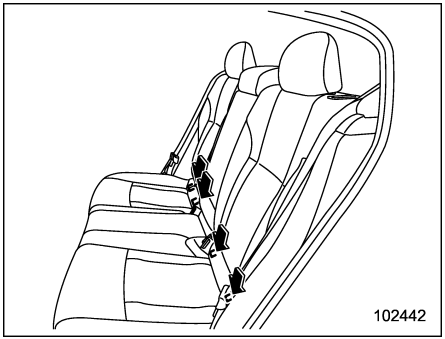

Other models

The lower anchorages (bars) are used for installing a child restraint system only on the rear seat window-side seating positions. For each window-side seating position, two lower anchorages are provided. Each lower anchorage is located where the seat cushion meets the seatback.

▽ **Tether anchorages**

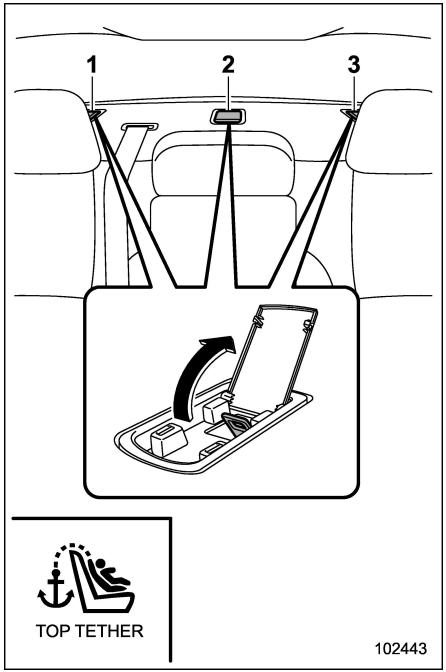

Legacy
1) For right seat
2) For center seat
3) For left seat

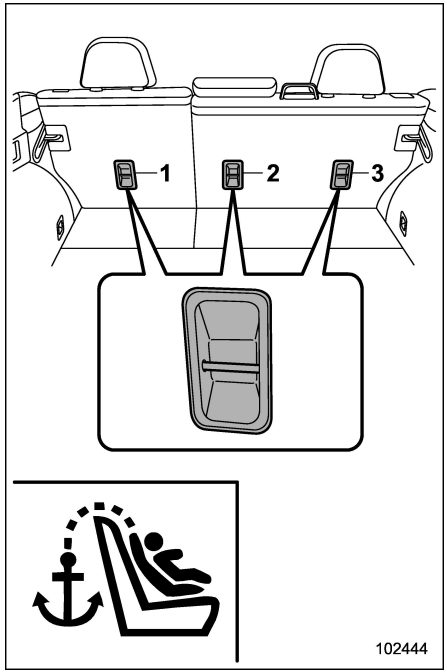

Outback
1) For left seat
2) For center seat
3) For right seat

The tether anchorages (upper anchorages) are provided at the locations shown in the above illustration. For details,

– CONTINUED –

refer to “Top Tether Anchorages” ☞P72.

▽ **To install a child restraint system using lower and tether anchorages**

⚠ WARNING

Before installing a child restraint system, be sure to confirm that the seatback is securely locked into place. Otherwise, in an accident, serious injury or death could result.

1. Move the seatback back and forth to confirm that it is securely locked into place.
   – Check that the red colored unlocking marker on the lock release button is not visible. For details, refer to “Folding Down the Rear Seatback” ☞P41.

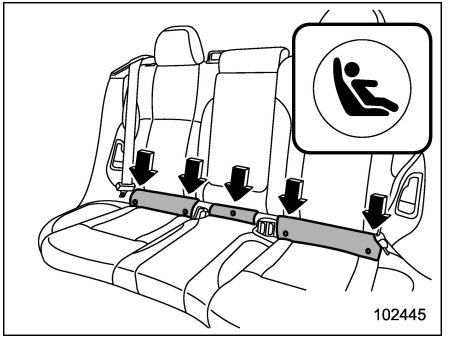

For U.S. spec. models

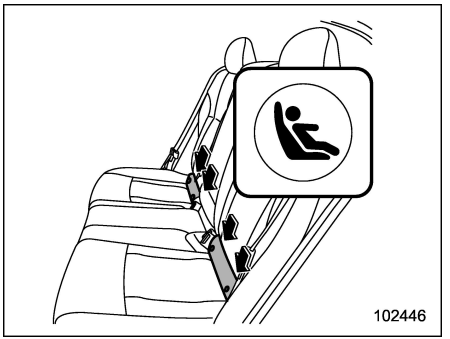

Other models

2. You will find “⊛” marks at the bottoms of the rear seatback. These marks indicate the positions of the lower anchorages (bars).

Each lower anchorage is located behind the cover of seatback bottom.

⚠ CAUTION

When you install a child restraint system, follow the manufacturer’s instructions supplied with it. After installing the child restraint system, check to ensure that it is held securely in position. If it is not held tight and secure, the danger of your child suffering personal injury in the event of an accident may be increased.

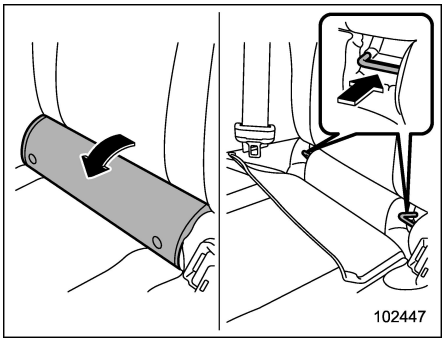

Peel off the anchorage cover completely from the selected side of the rear seatback to expose the anchorages (bars) to be used for installation of the child restraint

system.

If it is hard to install the child restraint system because the anchorage cover returns to the original position, press the anchorage cover to the seat cushion until it is flat.

3. If the child restraint system makes contact with the head restraint of the rear seating position where the child restraint system is to be installed, raise the head restraint to the extended position. If the child restraint system still makes contact, remove the head restraint. For details, refer to “Head Restraint Adjustment” ☞P44.

CAUTION

Store the head restraint that has been removed in the trunk (Legacy) or the cargo area (Outback). Do not place the head restraint in the passenger compartment to prevent it from being thrown around in the passenger compartment in a sudden stop or a sharp turn.

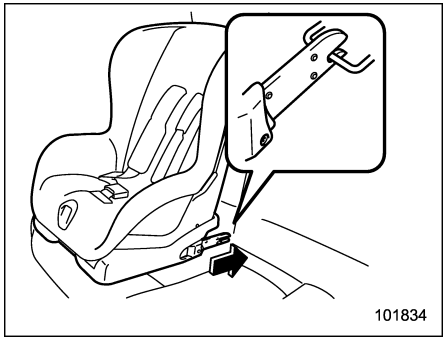

4. For Outback models, adjust the seatback to the upright position.

5. While following the instructions supplied by the child restraint system manufacturer, connect the lower hooks onto the lower anchorages located at “⊕” marks on the bottom of the rear seatback. When the hooks are connected, make sure the adjacent seatbelts are not caught.

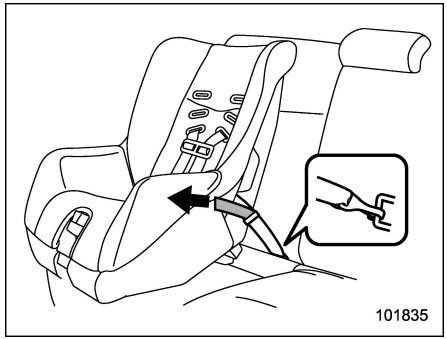

6. If your child restraint system is of a flexible attachment type (which uses tether belts to connect the child restraint system properly to the lower anchorages). While pushing the child restraint into the seat cushion, pull both left and right lower tether belts up to secure the child restraint system firmly by taking up the slack in the belt.

7. Latch the top tether hook onto the tether anchorage that is located on the rear shelf (Legacy)/behind the rear seat (Outback) and tighten the top tether firmly. For additional instructions, refer to “Top Tether Anchorages” ☞P72.

– CONTINUED –

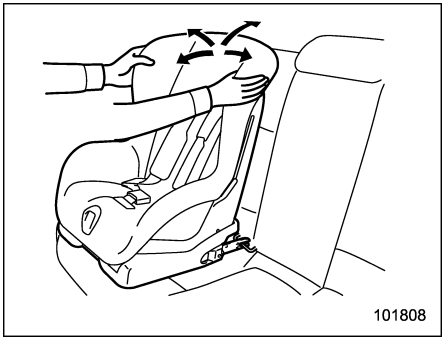

8. Before seating a child in the child restraint system, try to move it back and forth and left and right to verify that it is firmly secured in the center of the seat.

9. To remove the child restraint system, follow the reverse procedures of installation.

If you have any question concerning this type of child restraint system, ask your SUBARU dealer.

■ Top Tether Anchorages

Your vehicle is equipped with three top tether anchorages so that a child restraint system having a top tether can be installed in the rear seat. When installing a child restraint system using top tether, proceed as follows, while observing the instructions by the child restraint system manufacturer.

Since a top tether can provide additional stability by offering another connection between a child restraint system and the vehicle, we recommend that you use a top tether whenever one is required or available.

▼ Tether anchorage location

▽ Legacy

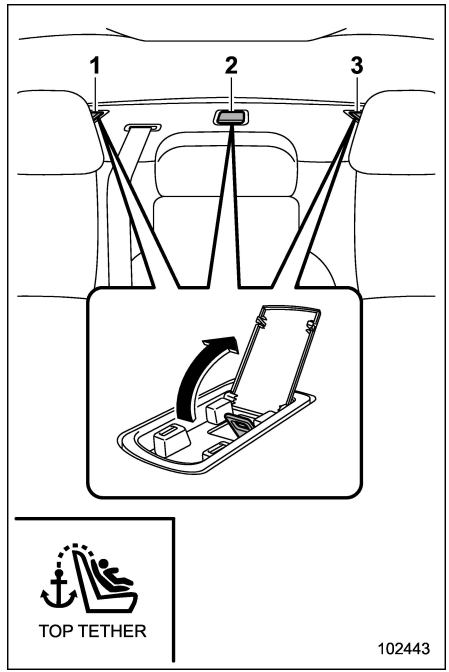

1) For right seat
2) For center seat
3) For left seat

Three tether anchorages are installed on the rear shelf behind the rear seat head restraint. Open the cover flap to use each anchorage.

▽ **Outback**

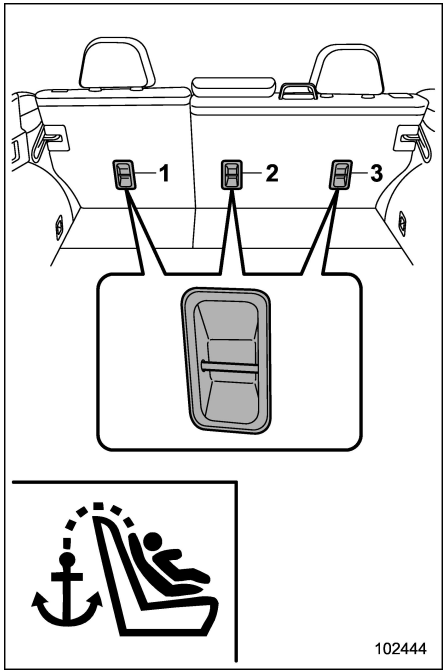

1) For left seat
2) For center seat
3) For right seat

Three tether anchorages, i.e., ones for the right, center and left positions, are already installed on the back side of the rear seatback.

▼ **To hook the top tether**

⚠ CAUTION

- **Always raise the head restraint when mounting a child restraint system with a top tether. Failure to do so may prevent the top tether from being fastened tightly.**
- **If the head restraint is removed, store the head restraint in the trunk (Legacy) or the cargo area (Outback).**
- **Do not place the head restraint in the passenger compartment to prevent it from being thrown around in the passenger compartment in a sudden stop or a sharp turn.**

– CONTINUED –

▽ **Legacy**

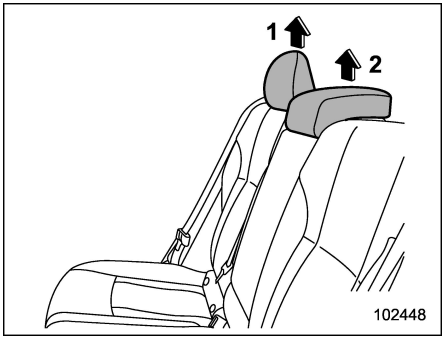

1) When installing on the window-side seating position
2) When installing on the rear center seating position

1. Raise the head restraint at the seating position where the child restraint system is to be installed with the seatbelt or lower anchorages.

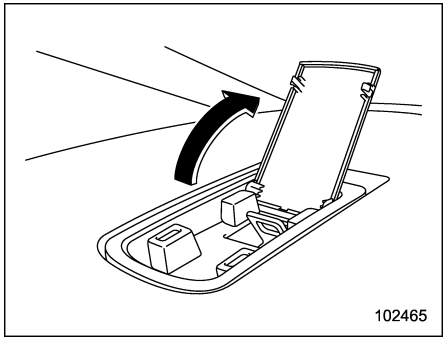

2. Open the cover flaps to use the anchorages.
3. Pass the top tether between the head restraint and seatback.

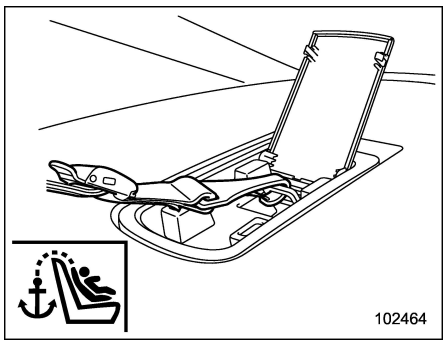

4. Fasten the top tether hook of the child restraint system to the appropriate upper anchorage.
5. Tighten the top tether securely. Contact your SUBARU dealer if you have any questions regarding the installation of a child restraint system.

▽ **Outback**

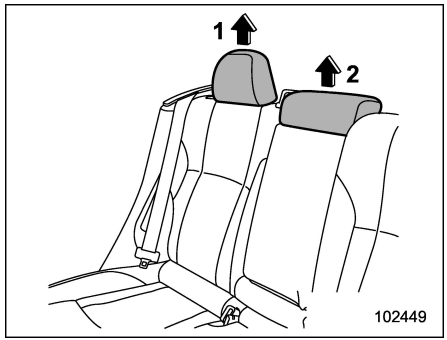

1) When installing on the window-side seating position
2) When installing on the rear center seating position

1. Raise the head restraint at the seating position where the child restraint system is to be installed with the seatbelt or lower anchorages.
2. Adjust the seatback to the upright position.
3. Pass the top tether between the head restraint and seatback.

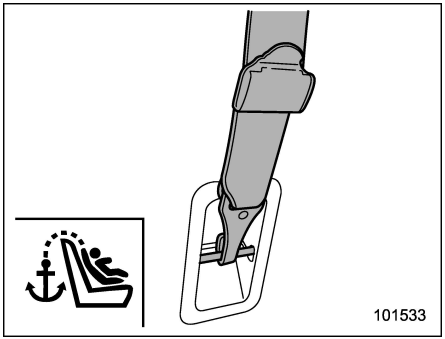

4. Attach the top tether hook to the appropriate upper anchorage.
5. Tighten the top tether securely. Contact your SUBARU dealer if you have any questions regarding the installation of a child restraint system.

1-8. *SRS Airbag (Supplemental Restraint System Airbag)

*SRS: This stands for Supplemental Restraint System. This name is used because the airbag system supplements the vehicle's seatbelts.

Your vehicle is equipped with a supplemental restraint system in addition to a lap/shoulder belt at each front seating position and each rear window-side seating position. The supplemental restraint system (SRS) consists of the following airbags.

- Driver's and front passenger's **frontal** airbags
- Driver's and front passenger's **side** airbags
- Front passenger's **seat cushion** airbags
- **Curtain** airbags (for driver, front passenger, and window-side rear passengers)
- **Knee airbag** for driver

These SRS airbags are designed only to be a supplement to the primary protection provided by the seatbelt.

The system also controls front seatbelt pretensioners. For operation instructions and precautions concerning the seatbelt pretensioner, refer to "Seatbelt Pretensioners" ☞P54.

■ General Precautions regarding SRS Airbag System

WARNING

- **To obtain maximum protection in the event of an accident, the driver and all passengers must always wear seatbelts when in the vehicle. The SRS airbag is designed only to be a supplement to the primary protection provided by the seatbelt. It does not eliminate the need to fasten seatbelts. In combination with the seatbelts, it offers the best combined protection in case of a serious accident.**

  Not wearing a seatbelt increases the chance of severe injury or death in a crash even when the vehicle has the SRS airbag.

  For instructions and precautions concerning the seatbelt system, refer to "Seatbelts" ☞P46.
- **The SRS side airbag and SRS curtain airbag are designed only to be a supplement to the primary**

– CONTINUED –

protection provided by the seatbelt. They do not eliminate the need to fasten seatbelts. It is also important to wear your seatbelt to help avoid injuries that can result when an occupant is not seated in a proper upright position.

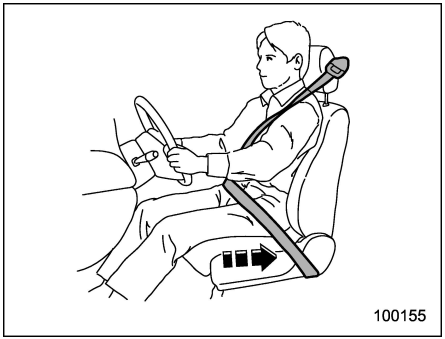

WARNING

- The SRS airbags deploy with considerable speed and force. Occupants who are out of proper position when the SRS airbag deploys could suffer very serious injuries. Because the SRS airbag needs enough space for deployment, the driver should always sit upright and well back in the seat as far from the steering wheel as practical while still maintaining full vehicle control and the front passenger should move the seat as far back as possible and sit upright and well back in the seat.

WARNING

- Do not sit or lean unnecessarily close to either front door. The SRS side airbags are stored in both front seat seatbacks next to the door, and they provide protection by deploying rapidly (faster than the blink of an eye) in the event of a side impact collision. However, the force of SRS side airbag deployment may cause injuries if your head or other parts of the body are too close to the SRS side airbag.
- Since your vehicle is equipped with SRS curtain airbags, do not sit or lean unnecessarily close to the front or rear door on either side. Also, do not put your head, arms or hands out of the window. The SRS curtain airbags on both sides of the cabin are stored in the roof side (between the front pillar and a point behind the rear quarter glass), and they provide protection by deploying rapidly (faster than the blink of an eye) in the event of a side impact, a rollover or an offset frontal collision depending on circumstances. However, the force of its deployment may cause injuries if your head is too close to it.
- Do not sit or lean unnecessarily close to the SRS airbag. Because the SRS airbag deploys with considerable speed (faster than the blink of an eye) and force to protect in high speed collisions, the force of an airbag can injure an occupant whose body is too close to SRS airbag.

  It is also important to wear your

seatbelt to help avoid injuries that can result when the SRS airbag contacts an occupant not in proper position such as one thrown forward during pre-accident braking.

Even when properly positioned, there remains a possibility that an occupant may suffer minor injury such as abrasions and bruises to the face or arms because of the SRS airbag deployment force.

WARNING

- Do not rest your arm on either front door or its internal trim. You could be injured in the event of SRS side airbag deployment.
- Do not place any objects over or near the SRS airbag cover or between you and the SRS airbag. If the SRS airbag deploys, these objects could interfere with its proper operation and could be propelled inside the vehicle, causing injury.

CAUTION

- When the SRS airbag deploys, some smoke will be released. This smoke could cause breathing problems for people with a history of asthma or other breathing trouble. If you or your passengers have breathing problems after SRS airbag deploys, get fresh air promptly.
- A deploying SRS airbag releases hot gas. Occupants could get burned if they come into direct contact with the hot gas.

NOTE

- When you sell your vehicle, we urge you to inform the buyer that the vehicle is equipped with SRS airbags. Also, notify the buyer of the applicable section in this Owner's Manual.
- If the SRS airbag deploys, fuel supply will be cut off to reduce the risk of fire caused by leaking fuel. For details about restarting of the engine, refer to "If Your Vehicle Is Involved in an Accident" ☞P461.

■ General Precautions regarding SRS Airbag System for Accessories and Any Objects

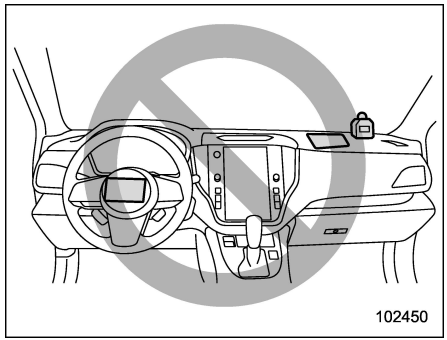

– CONTINUED –

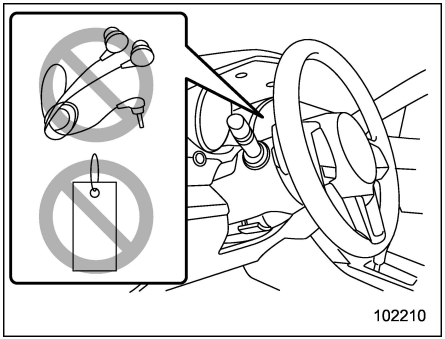

WARNING

- **Do not put any objects (including straps or cord) over the steering wheel pad, column cover, or dashboard.**
  - **These objects could be entangled with the steering wheel, preventing the SRS frontal airbag, etc. from operating properly.**
  - **If the SRS frontal airbag deploys, these objects could be propelled inside the vehicle, causing injury.**
- **Do not put any objects under the driver's side of the instrument panel. If the SRS knee airbag deploys, those objects could interfere with its proper operation and could be propelled inside the vehicle, causing injury.**
- **The key must not be attached to heavy, sharp or hard accessories, or another key. If the SRS knee airbag deploys, those objects could interfere with its proper operation and could be propelled inside the vehicle and cause injury.**

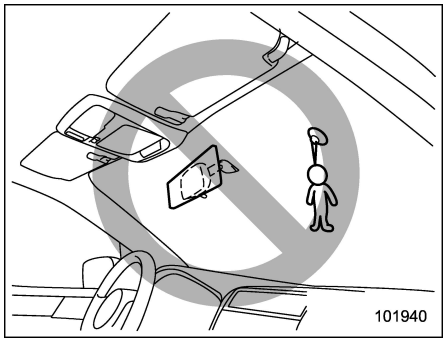

WARNING

Do not attach accessories to the windshield, or fit an extra-wide mirror over the inside rear view mirror. If the SRS airbag deploys, those objects could become projectiles that could seriously injure vehicle occupants.

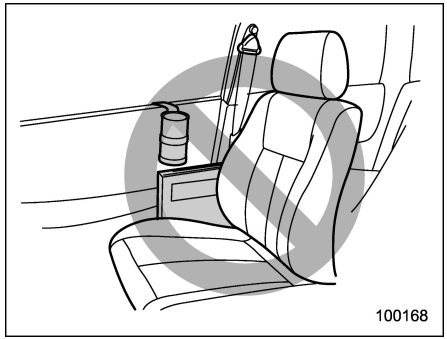

WARNING

- **Do not attach accessories to the door trim or near either SRS side airbags and do not place objects near the SRS side airbags. In the event of SRS side airbag deployment, they could be propelled dangerously toward the vehicle's occupants and cause injuries.**
- **Do not attach a hands-free microphone or any other accessory to a front pillar, a center pillar, a rear**

pillar, the windshield, a side window, an assist grip, or any other cabin surface that would be near a deploying SRS curtain airbag. A hands-free microphone or other accessory in such a location could be propelled through the cabin with great force by the curtain airbag, or it could prevent correct deployment of the curtain airbag. In either case, the result could be serious injuries.

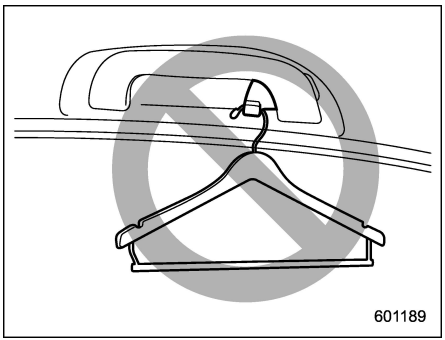

WARNING

Do not hang coat hangers or other hard or pointed objects on the coat hook. If such items were hanging on the coat hooks during deployment of the SRS curtain airbags, they could cause serious injuries by coming off the coat hooks and being thrown through the cabin or by preventing deployment of the curtain airbags.

Before hanging clothing on the coat hooks, make sure there are no sharp objects in the pockets. Hang clothing directly on the coat hooks without using hangers.

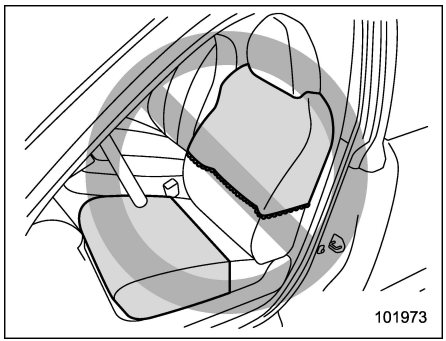

WARNING

- **Do not put any kind of clothes or other objects over the front passenger's seatback and do not attach labels or stickers to the front passenger's seat surface on or near the SRS side airbag. They could prevent proper deployment of the SRS side airbag, reducing protection available to the front passenger's seat's occupant.**
- **Do not install a seat cover unless it is a genuine SUBARU seat cover exclusively designed for use with the SRS airbag. Even when using a genuine SUBARU seat cover, the SRS side airbag system may not function normally if the seat cover is not installed correctly.**

– CONTINUED –

■ General Precautions regarding SRS Airbag System and Children

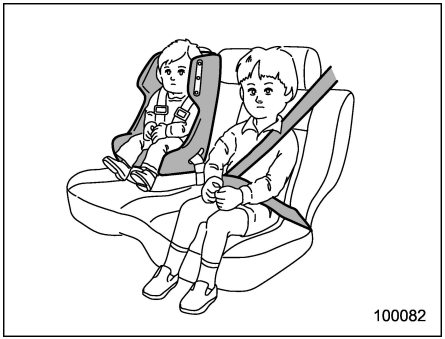

⚠ WARNING

Seat children in the rear seat properly restrained at all times. The SRS airbag deploys with considerable speed and force and can injure or even kill children, especially if they are not restrained or improperly restrained. Because children are lighter and weaker than adults, their risk of being injured from deployment is greater.

For that reason, we strongly recommend that ALL children (including those in child restraint systems) sit in the REAR seat properly restrained at all times in a child restraint device or in a seatbelt, whichever is appropriate for the child's age, height and weight.

Secure ALL types of child restraint systems (including forward facing child restraint system) in the REAR seats at all times.

According to accident statistics, children are safer when properly restrained in the rear seating positions than in the front seating positions.

For instructions and precautions concerning the child restraint system, refer to "Child Restraint Systems" ☞P57.

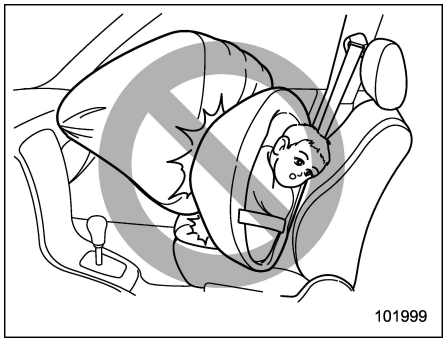

⚠ WARNING

NEVER INSTALL A CHILD RESTRAINT SYSTEM IN THE FRONT SEAT. DOING SO RISKS SERIOUS INJURY OR DEATH TO THE CHILD BY PLACING THE CHILD'S HEAD TOO CLOSE TO THE SRS AIRBAG.

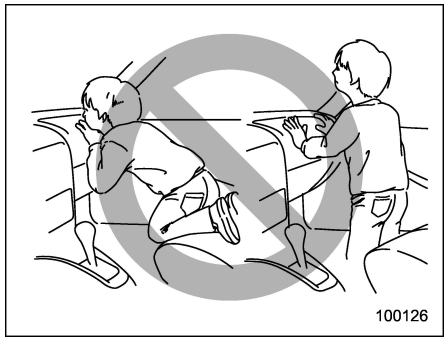

⚠ WARNING

Never allow a child to stand up or kneel on the front passenger's seat. The SRS airbag deploys with considerable force and can injure or even kill the child.

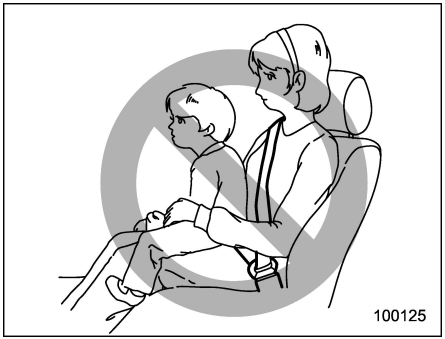

WARNING

Never hold a child on your lap or in your arms. The SRS airbag deploys with considerable force and can injure or even kill the child.

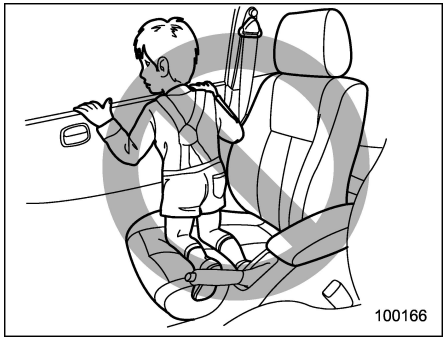

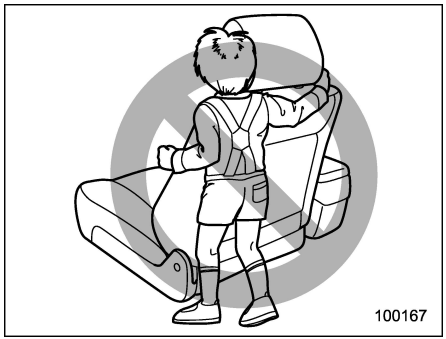

WARNING

- **Never allow a child to do the following.**
  - **Kneel on any passenger's seat facing the side window**
  - **Wrap his/her arms around the front seat seatback**
  - **Put his/her head, arms or other parts of the body out of the window**

  In the event of an accident, the force of SRS side airbag and/or SRS curtain airbag deployment could injure the child seriously because his/her head, arms or other parts of the body are too close to the SRS side airbag and/or SRS curtain airbag.
- **Since your vehicle is also equipped with a front passenger's SRS frontal airbag, children should be placed in the rear seat anyway and should be properly restrained at all times.**

– CONTINUED –

■ Components

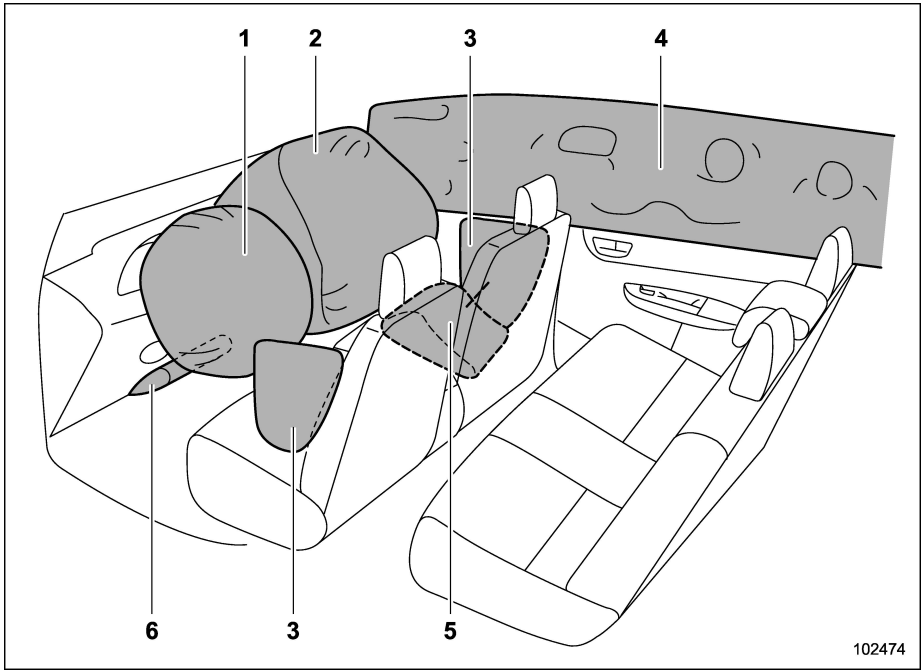

1) Driver's SRS frontal airbag
2) Front passenger's SRS frontal airbag
3) SRS side airbag
4) SRS curtain airbag
5) SRS seat cushion airbag
6) SRS knee airbag

The SRS airbags are stowed in the following locations.

Driver's SRS frontal airbag: in the center portion of the steering wheel
An "SRS AIRBAG" mark is located on the pad of the airbag.

Front passenger's SRS frontal airbag: near the top of the dashboard
An "SRS AIRBAG" mark is located on the right corner of the dashboard.

SRS side airbag: in the door side of each front seat cushion which bears an "SRS AIRBAG" mark

SRS curtain airbag: in the roof side (between the front pillar and a point over the rear seat)
"SRS AIRBAG" marks are located at the top of each center pillar.

SRS seat cushion airbag: in the center console side of the front passenger's seat cushion that bears an "SRS AIRBAG" label

SRS knee airbag: under the steering column
An "SRS AIRBAG" mark is located at the door of the airbag.

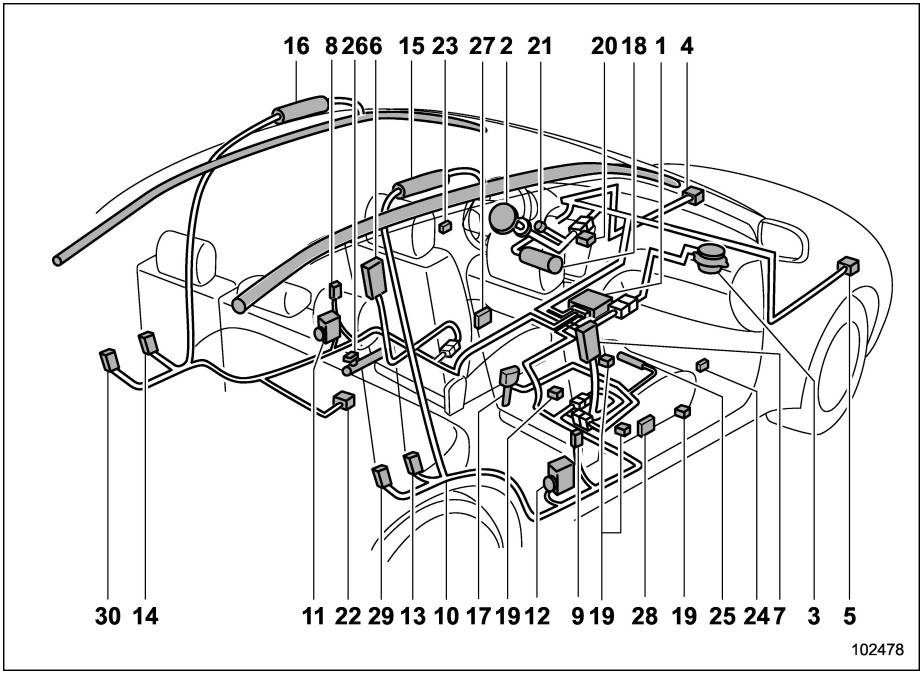

1) Airbag control module (including impact sensor and rollover sensor)
2) Frontal airbag module (driver's side)
3) Frontal airbag module (front passenger's side)
4) Front impact sensor (left-hand side)
5) Front impact sensor (right-hand side)
6) Side airbag module (driver's side)
7) Side airbag module (front passenger's side)
8) Side impact sensor (center pillar left-hand side)
9) Side impact sensor (center pillar right-hand side)
10) Airbag wiring
11) Seatbelt pretensioner and adaptive force limiter (driver's side)
12) Seatbelt pretensioner and adaptive force limiter (front passenger's side)
13) Side impact sensor (rear wheel house right-hand side)
14) Side impact sensor (rear wheel house left-hand side)
15) Curtain airbag module (right-hand side)
16) Curtain airbag module (left-hand side)
17) Seatbelt buckle switch (front passenger's side)
18) Knee airbag module (driver's side)
19) Front passenger's occupant detection system sensor
20) Front passenger's frontal airbag ON and OFF indicator
21) SRS airbag system warning light

– CONTINUED –

22) Side impact sensor (under the rear center seat)
23) Side impact sensor (front door left-hand side)
24) Side impact sensor (front door right-hand side)
25) Seat cushion airbag module (front passenger's side)
26) Lap belt pretensioner (driver's side)
27) Driver's seat position sensor
28) Passenger's seat position sensor
29) Rear seatbelt pretensioner (front passenger's side)
30) Rear seatbelt pretensioner (driver's side)

■ SUBARU Advanced Frontal Airbag System, SRS Seat Cushion Airbag, SRS Side Airbag and SRS Curtain Airbag

This vehicle is equipped with a SUBARU advanced frontal airbag system that complies with the new advanced frontal airbag requirements in the amended Federal Motor Vehicle Safety Standard (FMVSS) No. 208.

The SUBARU advanced frontal airbag system automatically determines the deployment force of the driver's SRS frontal airbag at the time of deployment as well as whether or not to activate the front passenger's SRS frontal airbag and, if activated, the deployment force of the SRS frontal airbag at the time of deployment.

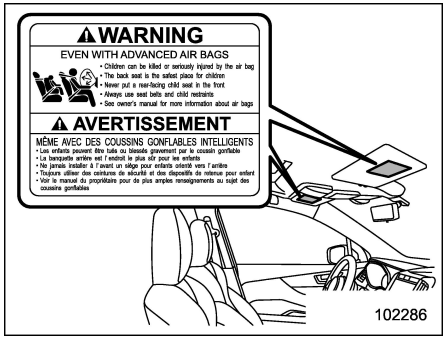

This vehicle has warning labels on the driver's and front passenger's sun visors beginning with the phrase "EVEN WITH ADVANCED AIR BAGS" and a tag attached to the glove box lid beginning with the phrase "Even with Advanced Air Bags". Make sure that you carefully read the instructions on the warning labels and tag.

Always wear your seatbelt. The SUBARU advanced frontal airbag system is a supplemental restraint system and must be used in combination with a seatbelt. All occupants should wear a seatbelt or be seated in an appropriate child restraint system.

This vehicle is equipped with a SUBARU SRS curtain airbag system that complies with the Federal Motor Vehicle Safety Standard (FMVSS) No. 226.

For the locations of the SRS airbags, refer to "Components" ☞P82.

In a moderate to severe frontal collision, the following components deploy.

- SRS frontal airbag for driver
- SRS frontal airbag for front passenger
- SRS seat cushion airbags for front passenger
- SRS curtain airbag*1
- SRS knee airbag for driver

*1: When an offset frontal collision that is severe enough to deploy the front airbag occurs.

These components supplement the seatbelts by reducing the impact to the occupant's head, chest and knees.

In a moderate to severe side impact collision, the SRS side airbag on the impacted side of the vehicle deploys between the occupant and the door panel and supplements the seatbelt by reducing the impact to the occupant's chest and waist.

In a moderate to severe side impact collision, the SRS curtain airbag on the impacted side of the vehicle deploys between the occupant and the side win-

dow and supplements the seatbelt by reducing the impact to the occupant's head.

NOTE

The SRS side airbag and seatbelt pretensioner are not controlled by the SUBARU advanced frontal airbag system.

▼ Driver's SRS frontal airbag

The driver's SRS frontal airbag uses a dual stage inflator. The inflator operates in different ways depending on the severity of impact.

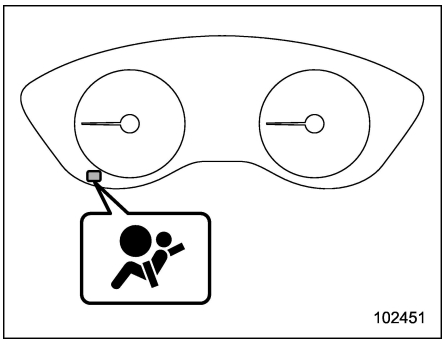

SRS airbag system warning light

Have the system inspected by your SUBARU dealer immediately if the SRS airbag system warning light illuminates.

▼ Front passenger's SRS frontal airbag

The front passenger's SRS frontal airbag uses a dual stage inflator actuator. The inflator operates in different ways depending on the severity of impact.

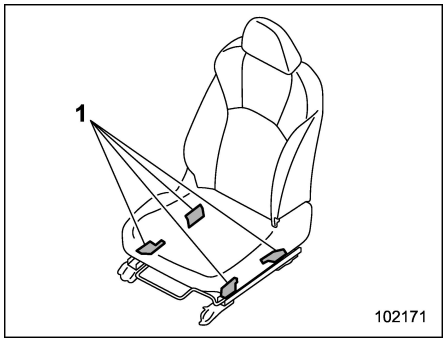

1) Occupant detection sensors

The occupant detection system sensors are installed between the seat and seat rails, and monitor the physique and posture of the front passenger. Using this information, the occupant detection system determines whether the front passenger's SRS frontal airbag should be deployed or not.

The occupant detection system may not inflate the front passenger's SRS frontal airbag even when the driver's SRS frontal airbag deploys. This is normal. In this case, although the front passenger's SRS frontal airbag does not operate, the front passenger's seatbelt pretensioner operates with the driver's seatbelt pretensioner. For details about the seatbelt pretensioner, refer to "Seatbelt Pretensioners" ☞P54.

⚠ CAUTION

Observe the following precautions. Failure to do so may prevent the SUBARU advanced frontal airbag system from functioning correctly or cause the system to fail.

- **Do not apply any strong impact to the front passenger's seat such as by kicking.**
- **Do not let rear passengers rest their feet between the front seatback and seat cushion.**
- **Do not spill liquid on the front passenger's seat. If liquid is spilled, wipe it off immediately.**
- **Do not remove or disassemble the front passenger's seat.**
- **Do not install any accessory (such as an audio amplifier) other than a genuine SUBARU accessory under the front passenger's**

– CONTINUED –

seat.

- **Do not place anything (shoes, umbrella, etc.) under the front passenger's seat.**
- **Do not use the front passenger's seat with the head restraint removed.**
- **Do not leave any articles on the front passenger's seat or the seatbelt tongue and buckle engaged when you leave your vehicle.**
- **Do not put sharp object(s) on the seat or pierce the seat upholstery.**
- **Do not place a magnet near the seatbelt buckle and the seatbelt retractor.**
- **Do not use front seats with their backward-forward position and seatback not being locked into place securely. If any of them are not locked securely, adjust them again. For adjusting procedure, refer to "Manual Seat" ☞P30 (models equipped with manual seats only).**

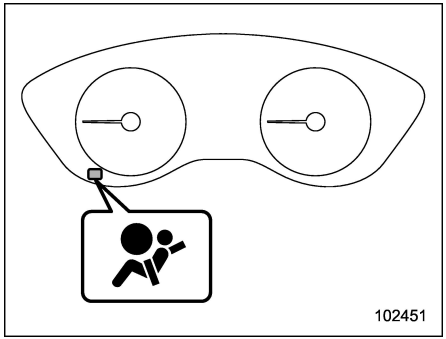

SRS airbag system warning light

If the seatbelt buckle switch and/or front passenger's occupant detection system have failed, the SRS airbag system warning light will illuminate. Have the system inspected by your SUBARU dealer immediately if the SRS airbag system warning light illuminates.

If your vehicle has sustained impact, this may affect the proper function of the SUBARU advanced frontal airbag system. Have your vehicle inspected at your SUBARU dealer. Do not use the front passenger's seat while driving the vehicle to your SUBARU dealer.

NOTE

The front passenger's SRS side airbag and SRS curtain airbag are not controlled by the SUBARU advanced frontal airbag system.

▼ Passenger's frontal airbag ON and OFF indicators

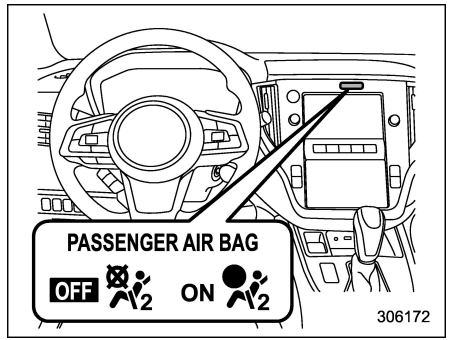

Dual 7.0-inch display models

ON: Front passenger's frontal airbag ON indicator

OFF: Front passenger's frontal airbag OFF indicator

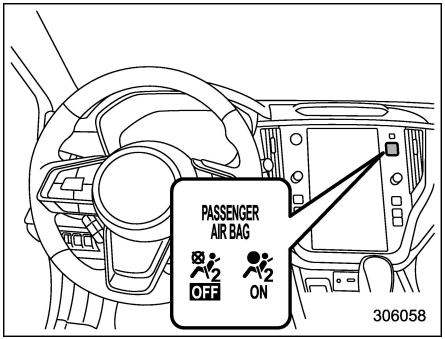

11.6-inch display models

: Front passenger's frontal airbag ON indicator

: Front passenger's frontal airbag OFF indicator

Refer to "Front Passenger's Frontal Airbag ON and OFF Indicators" ☞P177.

▼ Occupant detection system

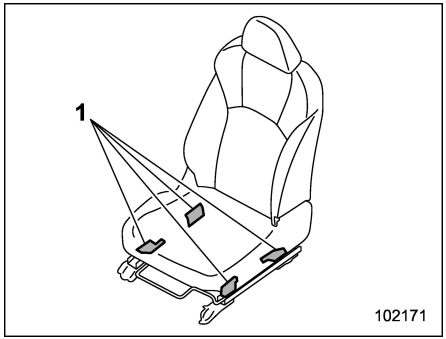

1) Occupant detection sensors

The occupant detection system sensors are installed between the seat and seat rails, and monitor the physique and posture of the front passenger. Using this information, the occupant detection system determines whether the front passenger's SRS frontal airbag and front passenger's SRS seat cushion airbag should be deployed or not.

WARNING

Do not kick the front passenger seat or subject it to severe impact. Otherwise, the SRS airbag system warning light may illuminate to indicate a malfunction of the front passenger occupant detection system. In this case, contact your SUBARU dealer immediately.

CAUTION

Electrical devices, such as cell phones, laptops, portable music players, or electronic games, especially when connected to the accessory power outlet and placed on the front passenger's seat or used by the person sitting in the front passenger's seat, may affect the operation of the occupant detection system. If either of the following situations occurs when using an electronic device in the vehicle, at first try to relocate that device to avoid it creating any interference.

- **The SRS airbag system warning light illuminates.**
- **The front passenger's frontal airbag ON and OFF indicators operate erratically.**

If the device continues to cause interference, the use of that device in the vehicle should be discontinued.

– CONTINUED –

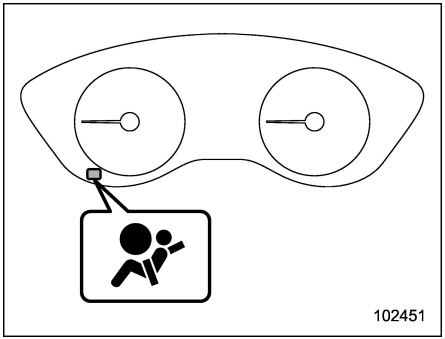

SRS airbag system warning light

If the front passenger's seat cushion is wet, this may adversely affect the ability of the system to determine deployment. Wipe off liquid from the seat, let the seat dry naturally and then check the SRS airbag system warning light.

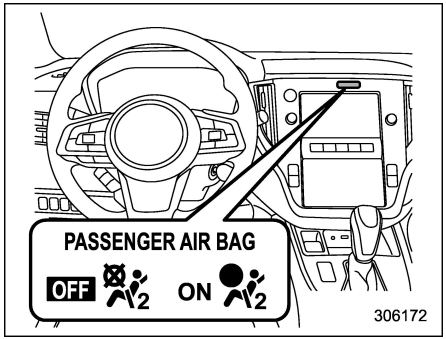

Dual 7.0-inch display models

ON: Front passenger's frontal airbag ON indicator

OFF: Front passenger's frontal airbag OFF indicator

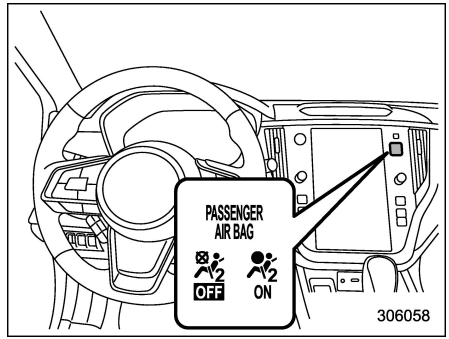

11.6-inch display models

ON: Front passenger's frontal airbag ON indicator

OFF: Front passenger's frontal airbag OFF indicator

If the front passenger's frontal airbag ON and OFF indicators do not work properly even when the front passenger's seat is dry, do not allow anyone to sit on the front passenger's seat and have the occupant detection system checked by your SUBARU dealer.

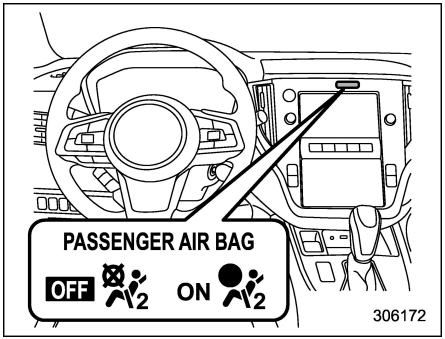

Dual 7.0-inch display models

ON: Front passenger's frontal airbag ON indicator

OFF: Front passenger's frontal airbag OFF indicator

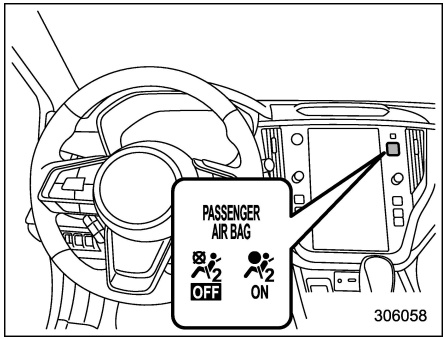

11.6-inch display models

ON: Front passenger's frontal airbag ON indicator

OFF: Front passenger's frontal airbag OFF indicator

Also, if luggage or electronic devices are placed on the front passenger's seat, this may adversely affect the ability of the system to determine deployment. This may prevent the front passenger's frontal airbag ON and OFF indicators from working properly. Check that the indicators work properly.

When the OFF indicator turns off and the ON indicator illuminates, the front passenger's frontal airbag may deploy during a collision. Remove luggage and electronic devices from the front passenger's seat.

▼ Conditions in which front passenger's SRS frontal airbag is not activated

The front passenger's SRS frontal airbag will not be activated when any of the following conditions are met regarding the front passenger's seat:

- The seat is empty.
- The seat is equipped with an appropriate child restraint system and an infant or a child is restrained in it. (See WARNING that follows.)
- The front passenger's occupant detection system is malfunctioning.

⚠ WARNING

NEVER INSTALL A CHILD RESTRAINT SYSTEM IN THE FRONT PASSENGER'S SEAT EVEN IF THE FRONT PASSENGER'S SRS FRONTAL AIRBAG IS DEACTIVATED. Be sure to install it in the REAR seat in a correct manner. Also, it is strongly recommended that any forward facing child seat or booster seat be installed in the REAR seat, and that even children who have outgrown a child restraint system be also seated in the REAR seat. This is because children sitting in the front passenger's seat may be killed or severely

– CONTINUED –

injured should the front passenger's SRS frontal airbag deploy. REAR seats are the safest place for children.

CAUTION

When the front passenger's seat is occupied by an infant in an appropriate child restraint system, observe the following precautions. Failure to do so may increase the load on the front passenger's seat, activating the front passenger's SRS frontal airbag even though that seat is occupied by an infant.

- **Do not place any article on the seat other than the infant in the child restraint system.**
- **Do not place more than one infant in the child restraint system.**

▽ **If the front passenger's frontal airbag ON indicator illuminates and the OFF indicator turns off even when an infant or a small child is in a child restraint system (including booster seat)**

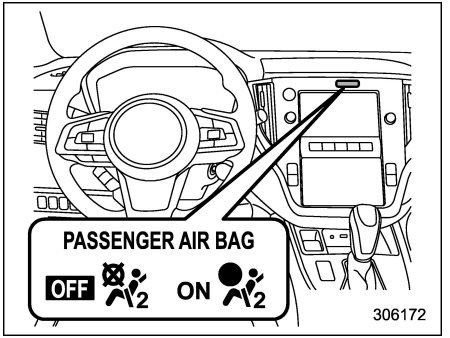

Dual 7.0-inch display models

ON: Front passenger's frontal airbag ON indicator

OFF: Front passenger's frontal airbag OFF indicator

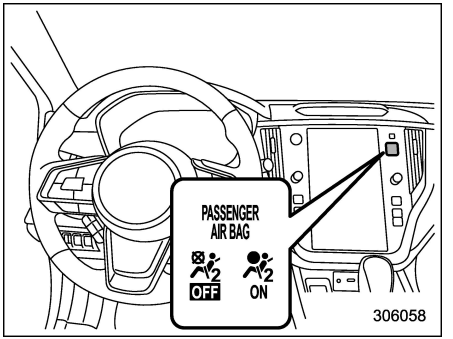

11.6-inch display models

ON: Front passenger's frontal airbag ON indicator

OFF: Front passenger's frontal airbag OFF indicator

1. Turn the ignition switch to the "LOCK"/"OFF" position.
2. Remove the child restraint system from the seat.
3. By referring to the child restraint manufacturer's recommendations as well as the child restraint system installation procedures in "Child Restraint Systems" ☞P57, correctly install the child restraint system.
4. Turn the ignition switch to the "ON" position and make sure that the front passenger's frontal airbag ON indicator turns off and the OFF indicator illuminates.

If still the ON indicator remains illuminated while the OFF indicator turns off, take the following actions.

- Ensure that no article is placed on the seat other than the child restraint system and the child occupant.
- Ensure that the backward-forward position and seatback of front passenger's seat are locked into place securely by moving the seat back and forth. (Models equipped with manual seats only)

If the ON indicator still remains illuminated while the OFF indicator turns off after taking relevant corrective actions described above, relocate the child restraint system to the rear seat and immediately contact your SUBARU dealer for an inspection.

NOTE

When a child who has outgrown a child restraint system or a small adult is seated in the front passenger's seat, the SUBARU advanced frontal airbag system may or may not activate the front passenger's SRS frontal airbag depending on the occupant's seating posture. Children should always wear a seatbelt when sitting in the seat irrespective of whether the airbag is deactivated or activated. If the front passenger's SRS frontal airbag is activated (the ON indicator remains illuminated while the OFF indicator turns off), take the following actions.

- **Ensure that no article is placed on the seat other than the occupant.**

If the ON indicator still remains illuminated while the OFF indicator turns off despite the fact that the actions noted above have been taken, seat the child/small adult in the rear seat and immediately contact your SUBARU dealer for an inspection. Even if the system has passed the dealer inspection, it is recommended that on subsequent trips the child/small adult always take the rear seat.

Children who have outgrown a child restraint system should always wear the seatbelt irrespective of whether the airbag is deactivated or activated.

▼ Conditions in which front passenger's SRS frontal airbag is activated

The front passenger's SRS frontal airbag will be activated for deployment upon impact when any of the following conditions are met regarding the front passenger's seat.

- When the seat is occupied by an adult.
- When certain items (e.g. jug of water) are placed on the seat.

▽ If the passenger's frontal airbag OFF indicator illuminates and the ON indicator turns off even when the front passenger's seat is occupied by an adult

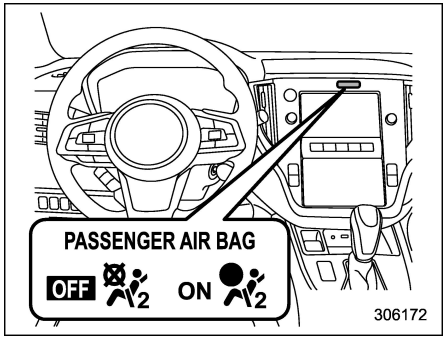

Dual 7.0-inch display models

ON: Front passenger's frontal airbag ON indicator

OFF: Front passenger's frontal airbag OFF indicator

– CONTINUED –

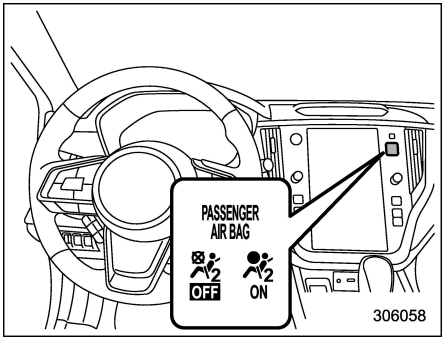

11.6-inch display models

: Front passenger's frontal airbag ON indicator

: Front passenger's frontal airbag OFF indicator

This can be caused by the adult incorrectly sitting in the front passenger's seat.

1. Turn the ignition switch to the "LOCK"/ "OFF" position.
2. Ask the front passenger to set the seatback to the upright position, sit up straight in the center of the seat cushion, correctly fasten the seatbelt, position his/her legs out forward, and adjust the seat to the rearmost position.
3. Turn the ignition switch to the "ON" position.

If the OFF indicator remains illuminated while the ON indicator remains off, take the following actions.

1. Turn the ignition switch to the "LOCK"/ "OFF" position.
2. Make sure that the front passenger does not use a blanket, extra seat cushion, seat cover, extra seat heater or massager, etc.
3. If wearing excessive layers of clothing, the front passenger should remove any unnecessary items before sitting in the front passenger's seat, or should sit in a rear seat.
4. Turn the ignition switch to the "ON" position and wait 6 seconds to allow the system to complete self-checking. Following the system check, both indicators turn off for 2 seconds. Now, the ON indicator should illuminate while the OFF indicator remains off.

If the OFF indicator still remains illuminated while the ON indicator remains off, ask the occupant to move to the rear seat and immediately contact your SUBARU dealer for an inspection.

▼ Operation

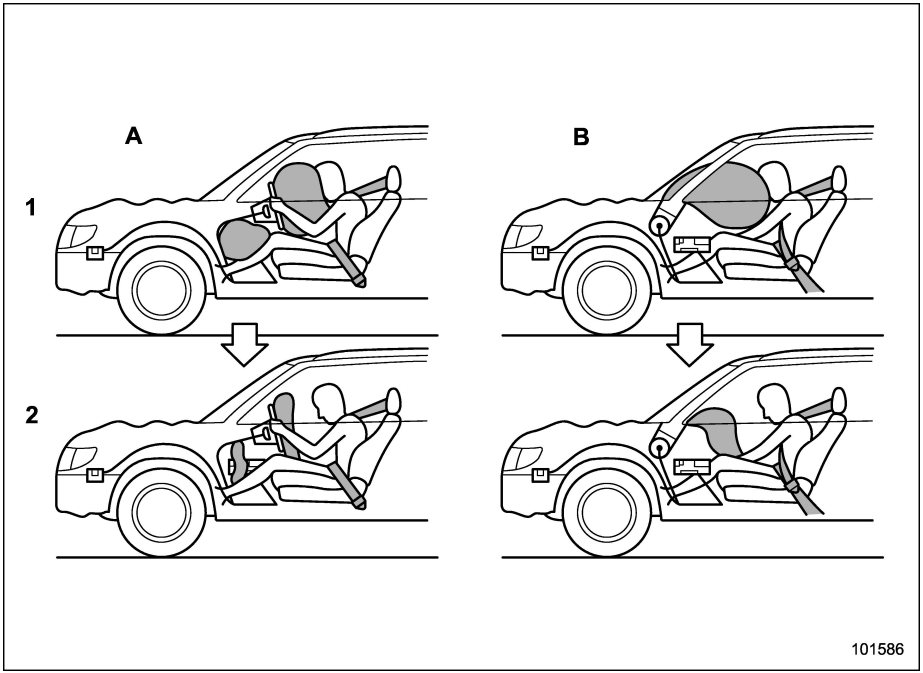

A) Driver's side
B) Passenger's side
1) SRS AIRBAGs deploy as soon as a collision occurs.
2) After deployment, SRS AIRBAGs start to deflate immediately so that the driver's vision is not obstructed.

The SRS airbags can function only when the ignition switch is in the "ON" position.

The SUBARU advanced frontal airbag system is designed to determine the activation or deactivation condition of the front passenger's SRS frontal airbag depending on the characteristic of item(s) or person on the front passenger's seat monitored by the front passenger's occupant detection system sensor. For this reason, only the driver's SRS frontal airbag may deploy in the event of a collision, but this does not mean failure of the system.

If the following sensors detect a predetermined amount of force during a frontal collision, the control module sends signals to the airbag module(s) (only driver's module or both driver's and front passenger's modules) instructing the module(s) to inflate the SRS frontal airbag(s).

– CONTINUED –

- The front impact sensors
- The impact sensors in the airbag control module

On the driver's side, the SRS knee airbag also inflates with the SRS frontal airbag.

The driver's and front passenger's SRS frontal airbags use dual stage inflators. The two inflators of each airbag are triggered either sequentially or simultaneously, depending on the severity of impact, in the case of the driver's SRS frontal airbag and depending on the severity of impact and the characteristic of item(s) or person on the seat in the case of the front passenger's SRS frontal airbag.

▼ After deployment

After deployment, the SRS airbag immediately starts to deflate so that the driver's vision is not obstructed and the driver's ability to maintain control of the vehicle is not impaired. The time required from detecting impact to the deflation of the SRS airbag after deployment is shorter than the blink of an eye.

Both when only the driver's SRS frontal airbag deploys and the driver's and front passenger's SRS frontal airbags deploy, the driver's and front passenger's seatbelt pretensioners operate at the same time.

When the SRS airbag deploys, a sudden, fairly loud inflation noise will be heard and some smoke will be released. These occurrences are a normal result of the deployment. This smoke does not indicate a fire in the vehicle.

⚠ CAUTION

Do not touch the SRS airbag system components around the steering wheel and dashboard with bare hands right after deployment. Doing so can cause burns because the components can be very hot as a result of deployment.

▼ Example of the type of accident

The driver's SRS frontal airbag and front passenger's SRS frontal airbag are designed as follows.

- To deploy in the event of an accident involving a moderate to severe frontal collision
- To function on a one-time-only basis

The driver's SRS frontal airbag and front passenger's SRS frontal airbag are not designed as follows.

- To deploy in most lesser frontal impacts*1
- To deploy in most side or rear impacts or in most rollover accidents*2

*1: Because the necessary protection can be achieved by the seatbelt alone.

*2: Because deployment of only the driver's SRS frontal airbag or both the driver's and front passenger's SRS frontal airbags would not protect the occupant in those situations.

SRS airbag deployment depends on the level of force experienced in the passenger compartment during a collision. That level differs from one type of collision to another, and it may have no bearing on the visible damage done to the vehicle itself.

▽ **Example of accident in which the driver's/driver's and front passenger's SRS frontal airbag(s) will most likely deploy**

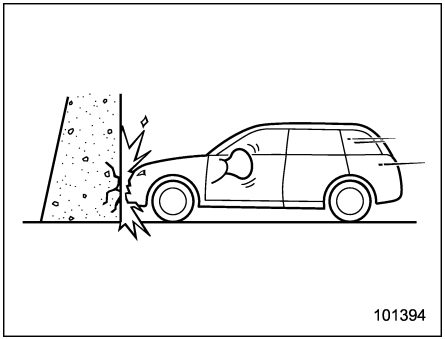

A head-on collision against a thick concrete wall at a vehicle speed of 12 to 19 mph (20 to 30 km/h) or higher activates only the driver's SRS frontal airbag or both driver's and front passenger's SRS frontal airbags. The airbag(s) will also be activated when the vehicle is exposed to a frontal impact similar in fashion and magnitude to the collision described above.

▽ **Examples of the types of accidents in which it is possible that the driver's/driver's and front passenger's SRS frontal airbag(s) will deploy**

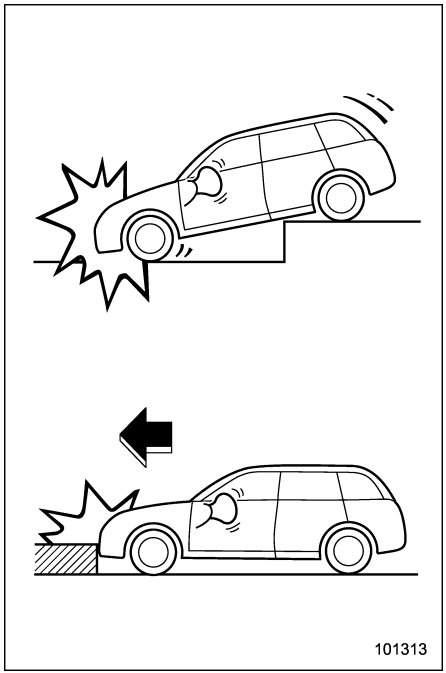

Only the driver's SRS frontal airbag or both driver's and front passenger's SRS frontal airbags may be activated when the vehicle sustains a hard impact in the undercarriage area from the road surface (such as when the vehicle plunges into a deep ditch, is severely impacted or knocked hard against an obstacle on the road such as a curb).

– CONTINUED –

▽ **Examples of the types of accidents in which deployment of the driver's/driver's and front passenger's SRS frontal airbag(s) is unlikely to occur**

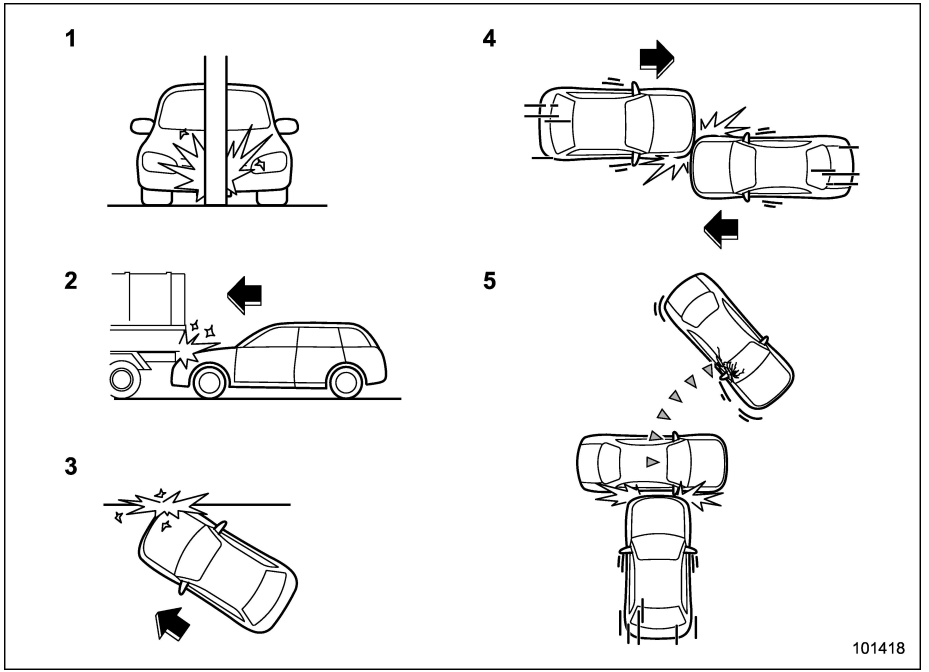

1) The vehicle strikes an object, such as a telephone pole or sign pole.
2) The vehicle slides under the load bed of a truck.
3) The vehicle sustains an oblique offset frontal impact.
4) The vehicle sustains an offset frontal collision.
5) The vehicle strikes an object that can move or deform, such as a parked vehicle.

There are many types of collisions which might not necessarily require deployment of driver's/driver's and front passenger's SRS frontal airbag(s). In the event of accidents like those illustrated, the driver's/driver's and front passenger's SRS frontal airbag(s) may not deploy depending on the level of accident forces involved.

▽ **Examples of the types of accidents in which the driver's/driver's and front passenger's SRS frontal airbag(s) are not designed to deploy in most cases**

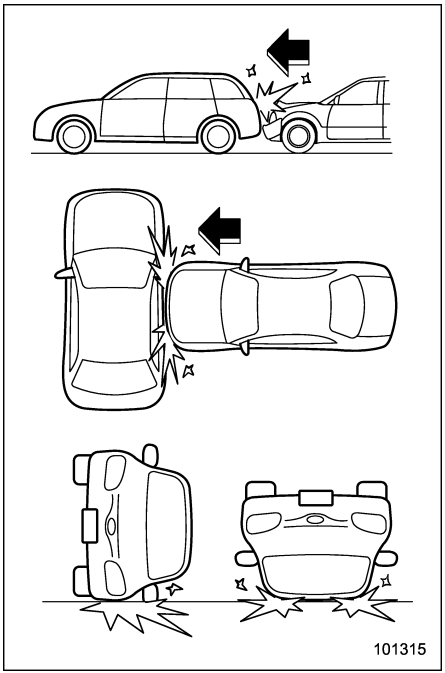

The driver's and front passenger's SRS frontal airbags are not designed to deploy in most of the following cases.

- If the vehicle is struck from the side or from behind
- If the vehicle rolls onto its side or roof
- If the vehicle is involved in a low-speed frontal collision

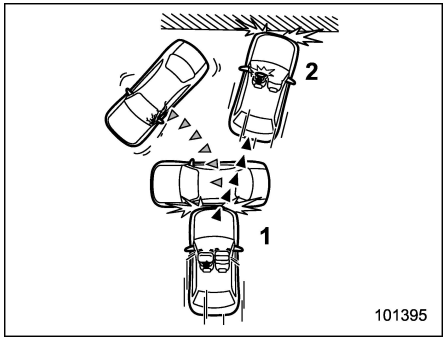

1) First impact
2) Second impact

In an accident where the vehicle is impacted more than once, the driver's and/or front passenger's SRS frontal airbag(s) will deploy only once on the first impact.

Example: In the case of a double collision, first with another vehicle, then against a concrete wall in immediate succession, once either or both of the driver's and front passenger's SRS frontal airbags is/are activated on the first impact, it/they will not be activated on the second impact.

▼ **SRS seat cushion airbag operation**

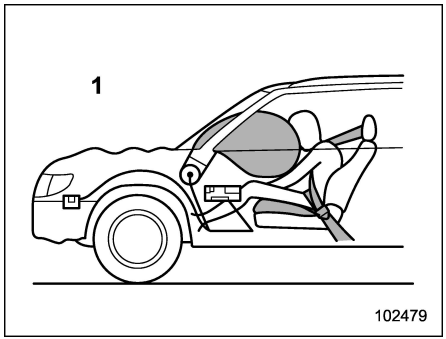

1) Passenger's side

⚠ WARNING

The SRS seat cushion airbag is designed not to deploy when the seatbelt for the corresponding seat is not fastened. For safety, all persons in the vehicle should fasten their seatbelts.

The SRS seat cushion airbags are designed to deploy simultaneously when the SRS frontal airbags deploy. For details

– CONTINUED –

about the operating conditions, refer to "SUBARU Advanced Frontal Airbag System, SRS Seat Cushion Airbag, SRS Side Airbag and SRS Curtain Airbag" ☞P84.

The front passenger's SRS seat cushion airbag is designed not to deploy in either of the following conditions.

- The front passenger's seatbelt is not fastened (even when the front passenger's frontal airbag ON indicator illuminates while the OFF indicator remains off).
- The front passenger's frontal airbag ON indicator is off while the OFF indicator illuminates.

NOTE

When the front passenger's SRS frontal airbag is deactivated by the occupant detection system, the front passenger's SRS seat cushion airbag is also deactivated.

■ SRS Side Airbag and SRS Curtain Airbag

▼ SRS side airbag

The SRS side airbag is stored in the door side of each front seat seatback, which bears an "SRS AIRBAG" tag.

In a moderate to severe side impact collision, the SRS side airbag on the impacted side of the vehicle deploys between the occupant and the door panel and supplements the seatbelt by reducing the impact on the occupant's chest and waist. The SRS side airbag operates only for front seat occupants.

▼ SRS curtain airbag

Your vehicle is equipped with a SUBARU SRS curtain airbag system that complies with the Federal Motor Vehicle Safety Standard (FMVSS) No. 226.

The SRS curtain airbag on each side of the cabin is stored in the roof side (between the front pillar and a point over the rear seat). An "SRS AIRBAG" mark is located at the top of each center pillar.

In a moderate to severe side impact collision, the SRS curtain airbag on the impacted side of the vehicle deploys between the occupant and the side window and supplements the seatbelt by reducing the impact on the occupant's head.

In a rollover, SRS curtain airbags on both sides of the vehicle deploy between the occupant and the side window and supplement the seatbelt by reducing the impact to the occupant's head.

In an offset frontal collision, SRS curtain airbags on both sides of the vehicle deploy between the occupant and the side window and supplement the seatbelt by reducing the impact to the occupant's head and chest.

▼ Operation

The SRS side airbag and SRS curtain airbag can function only when the ignition switch is in the "ON" position.

The following airbags deploy indepen-

dently of each other since each has its own impact sensor.

- Driver's SRS side airbag
- Front passenger's SRS side airbag
- SRS curtain airbag (right-hand side)
- SRS curtain airbag (left-hand side)

Therefore, they may not both deploy in the same accident. Also, the SRS side airbag and SRS curtain airbag deploys independently of the driver's and front passenger's SRS frontal airbags in the steering wheel and instrument panel.

For the locations of the sensors and control modules, refer to "Components" ☞P82.

▼ After deployment

After the deployment, the SRS side airbag immediately starts to deflate. The time required from detection of an impact to deflation of an SRS side airbag after deployment is shorter than the blink of an eye.

The SRS curtain airbag remains inflated for a while following deployment then slowly deflates.

The SRS side airbag and SRS curtain airbag deploy even when no one occupies the seat on the side on which an impact is applied.

When the SRS side airbag and SRS curtain airbag deploy, a sudden, fairly loud inflation noise will be heard and some smoke will be released. These occurrences are a normal result of the deployment. This smoke does not indicate a fire in the vehicle.

⚠ CAUTION

Do not touch the SRS side airbag system components around the front seat seatback with bare hands right after deployment. Doing so can cause burns because the components can be very hot as a result of deployment.

After deployment, do not touch any part of the SRS curtain airbag system (from the front pillar to the part of the roof side over the rear seat). Doing so can cause burns because the components can be very hot as a result of deployment.

▼ Example of the type of accident

The SRS side airbag and SRS curtain airbag are designed as follows:

- To deploy in the event of an accident involving a moderate to severe side impact collision
- To function on a one-time-only basis.

The SRS side airbag and SRS curtain airbag are not designed to deploy in the following cases:

- In most lesser side impact
- In most frontal or most rear impacts (because the SRS side airbag and SRS curtain airbag deployment would not protect the occupant in those situations)

The SRS curtain airbags are also designed to deploy when the vehicle is in an extremely inclined state such as during a rollover. They are not designed to deploy in most lesser inclined state.

SRS side airbag and SRS curtain airbag deployment depend on the level of force experienced in the passenger compartment during a side impact collision. That level differs from one type of collision to another, and it may have no bearing on the visible damage done to the vehicle itself.

– CONTINUED –

▽ **Example of the type of accident in which the SRS side airbag will most likely deploy.**

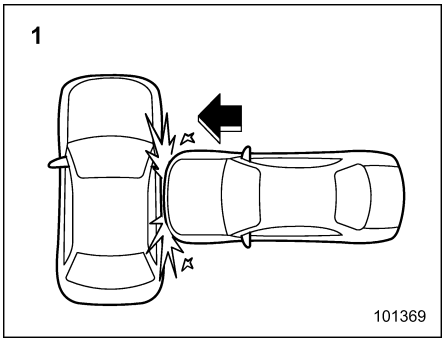

1) A severe side impact near the front seat.

▽ **Examples of the types of accidents in which the SRS curtain airbag will most likely deploy.**

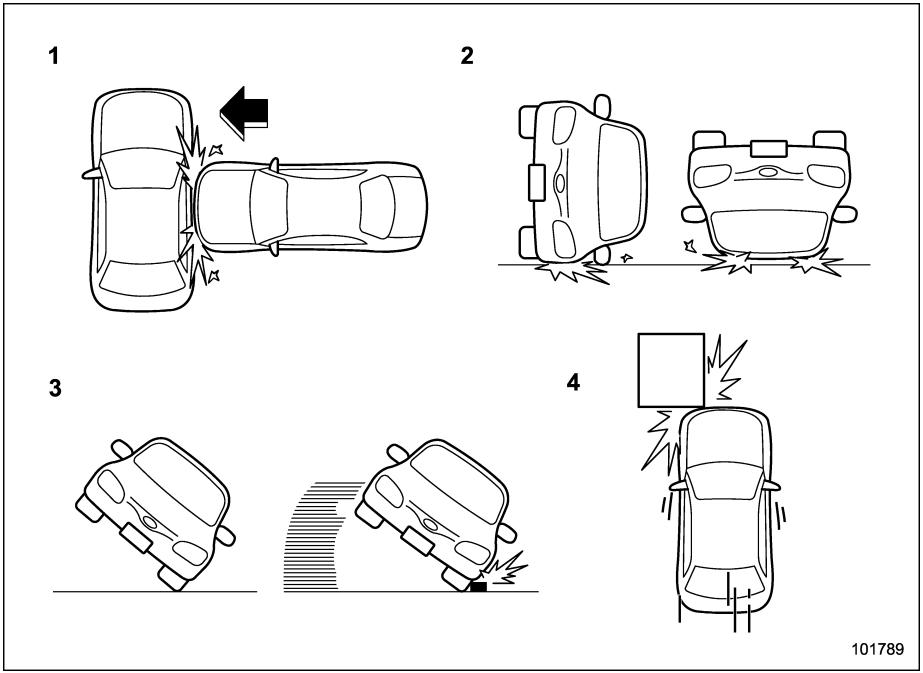

1) The vehicle is involved in a severe side impact near the front seat or the rear seat.
2) The vehicle rolls onto its side or the roof.
3) The angle of vehicle tip-up is marginal or the skidding vehicle's tires hit a curbstone laterally.
4) An offset frontal collision that is severe enough to deploy the front airbag.

– CONTINUED –

▽ **Examples of the types of accidents in which it is possible that the SRS side airbag and the SRS curtain airbag will deploy.**

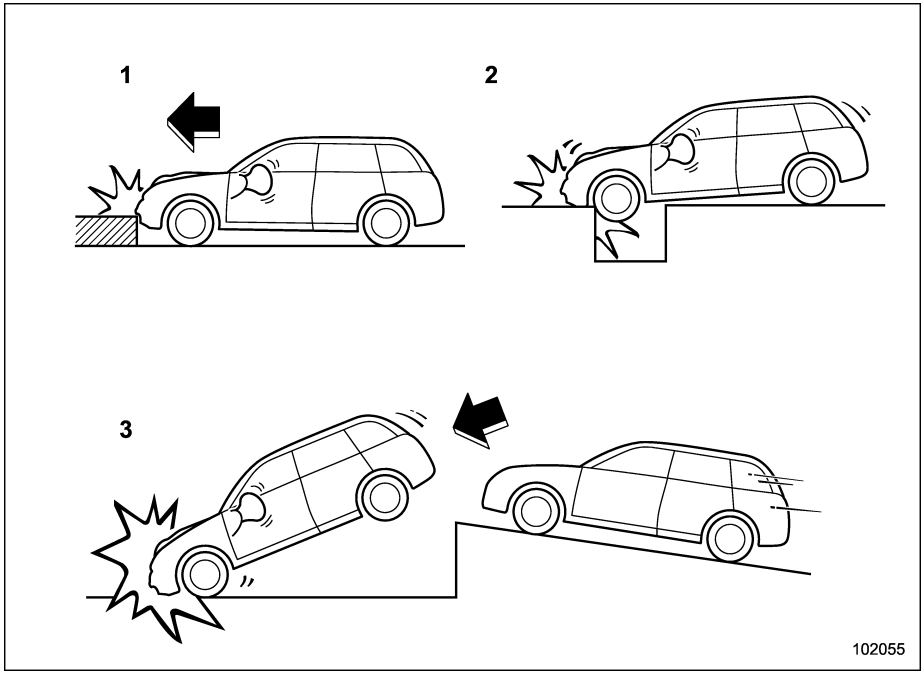

1) Hitting a curb, edge of pavement or hard surface
2) Falling into or jumping over a deep hole
3) Landing hard or vehicle falling

It is possible that the SRS side and curtain airbags will deploy if a serious impact occurs to the underside of your vehicle. Some examples are shown in the illustration.

▽ **Examples of the types of accidents in which the SRS side airbag is unlikely to deploy.**

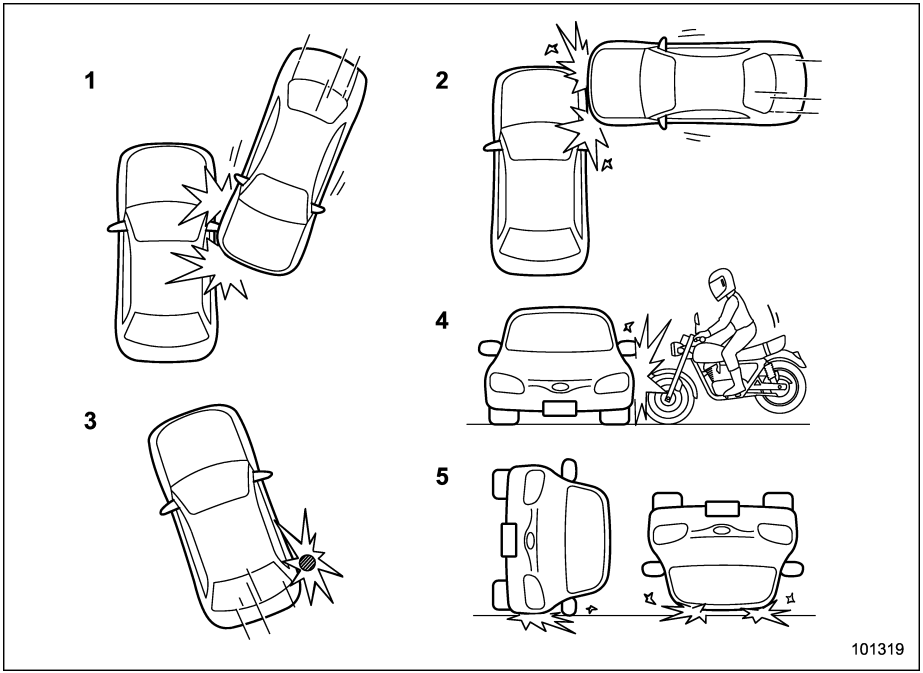

1) The vehicle is involved in an oblique side-on impact.
2) The vehicle is involved in a side-on impact in an area outside the vicinity of the passenger compartment.
3) The vehicle strikes a telephone pole or similar object.
4) The vehicle is involved in a side-on impact from a motorcycle.
5) The vehicle rolls onto its side or the roof.

There are many types of collisions which might not necessarily require SRS side airbag deployment. In the event of accidents like those illustrated, the SRS side airbag may not deploy depending on the level of accident forces involved.

– CONTINUED –

▽ **Examples of the types of accidents in which the SRS curtain airbag is unlikely to deploy.**

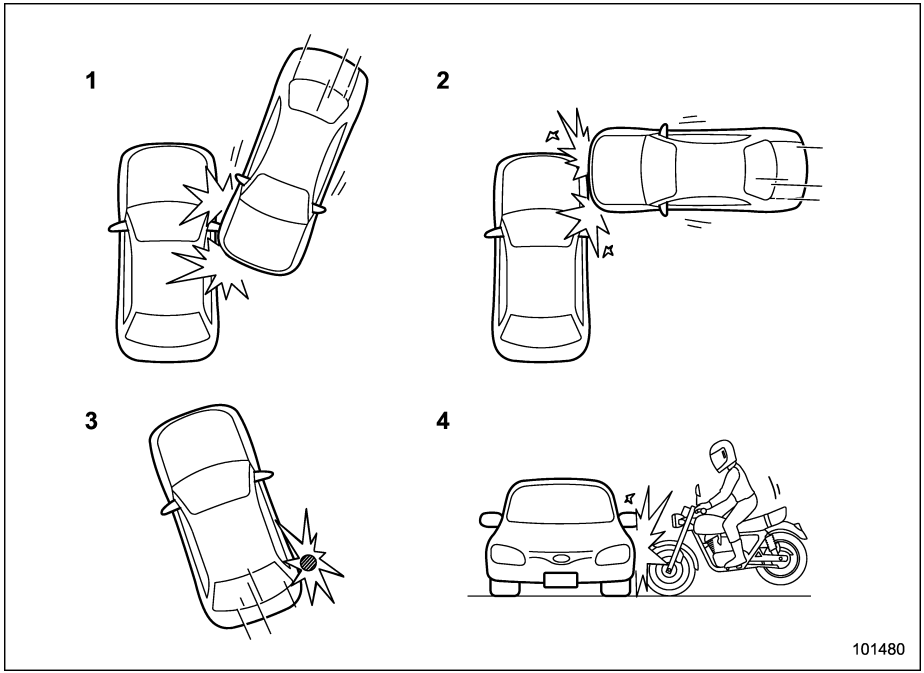

1) The vehicle is involved in an oblique side-on impact.
2) The vehicle is involved in a side-on impact in an area outside the vicinity of the passenger compartment.
3) The vehicle strikes a telephone pole or similar object.
4) The vehicle is involved in a side-on impact from a motorcycle.

There are many types of collisions which might not necessarily require SRS curtain airbag deployment. In the event of accidents like those illustrated, the SRS curtain airbag may not deploy depending on the level of accident forces involved.

▽ **Examples of the types of accidents in which the SRS side airbag and SRS curtain airbag are not designed to deploy in most cases**

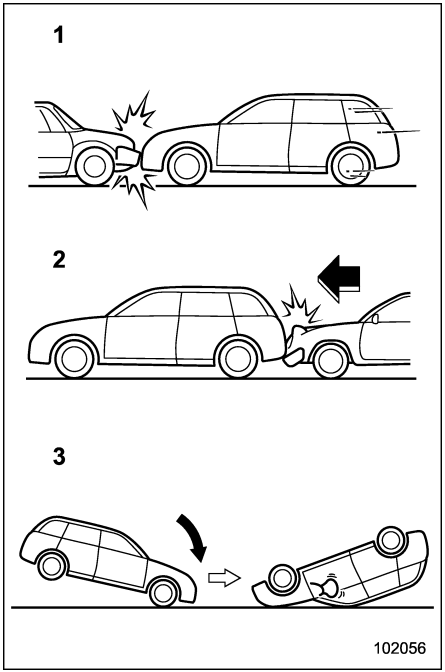

1) The vehicle is involved in frontal collision with another vehicle (moving or stationary).
2) The vehicle is struck from behind.
3) The vehicle pitches end over end.

In the event of accidents like those illustrated, the SRS side airbag and SRS curtain airbag are not designed to deploy in most cases.

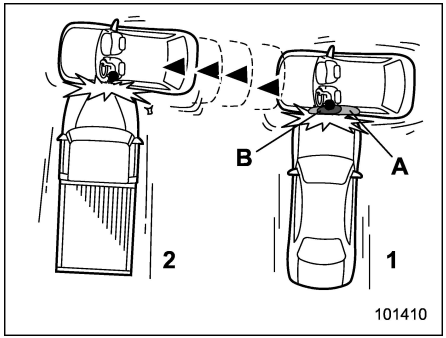

1) First impact
2) Second impact
A) SRS curtain airbag
B) SRS side airbag

In an accident where the vehicle is struck from the side more than once, the SRS side airbag and SRS curtain airbag deploy only once on the first impact.

Example: In the case of a double side impact collision, first with one vehicle and immediately followed by another from the same direction, once the SRS side airbag and SRS curtain airbag are activated on the first impact, they will not be activated on the second.

■ SRS Airbag System Monitors

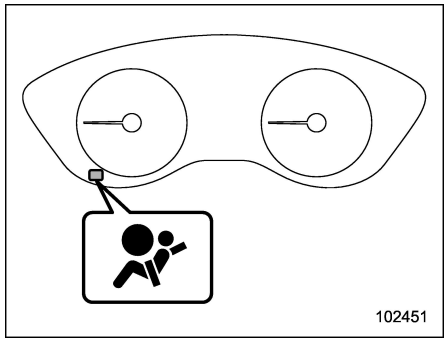

SRS airbag system warning light

A diagnostic system continually monitors the readiness of the SRS airbag system (including front seatbelt pretensioners) with the ignition switch in the “ON” position. The SRS airbag system warning light will show normal system operation by illuminating for approximately 6 seconds when the ignition switch is turned to the “ON” position.

– CONTINUED –

The following components are monitored by the indicator:

- Front impact sensor
  - Right-hand side
  - Left-hand side
- Airbag control module (including impact sensor and rollover sensor)
- Frontal airbag module
  - Driver's side
  - Front passenger's side
- Knee airbag module
  - Driver's side
- Seat cushion airbag module
  - Front passenger's side
- Side impact sensor
  - Center pillar left-hand side
  - Center pillar right-hand side
  - Forward of rear wheel house left-hand side
  - Forward of rear wheel house right-hand side
  - Front door left-hand side
  - Front door right-hand side
  - Under the rear center seat
- Side airbag module
  - Driver's side
  - Front passenger's side
- Curtain airbag module
  - Right-hand side
  - Left-hand side
- Seatbelt pretensioner and adaptive force limiter
  - Driver's side
  - Front passenger's side
- Lap belt pretensioner
  - Driver's side
- Seatbelt buckle switch
  - Front passenger's side
- Front passenger's occupant detection system sensor
- Front passenger's frontal airbag ON and OFF indicator
- All related wiring
- Rear seatbelt pretensioner
  - Driver's side
  - Passenger's side
- Seat position sensor
  - Driver's side
  - Passenger's side

WARNING

If the warning light exhibits any of the following conditions, there may be a malfunction in the seatbelt pretensioners and/or SRS airbag system.

- **Flashing or flickering of the warning light**
- **No illumination of the warning light when the ignition switch is first turned to the "ON" position**
- **Continuous illumination of the warning light**
- **Illumination of the warning light while driving**

Immediately take your vehicle to your nearest SUBARU dealer to have the system checked. Unless checked and properly repaired, the seatbelt pretensioners and/or SRS airbag will not operate properly in the event of a collision, which may increase the risk of injury.

■ SRS Airbag System Servicing

WARNING

- **When discarding an airbag module or scrapping the entire vehicle damaged by a collision, consult your SUBARU dealer.**
- **The SRS airbag has no user-serviceable parts. Do not use electrical test equipment on any circuit related to the SRS airbag system. For required servicing of the SRS airbag, consult your nearest SUBARU dealer. Tampering with or disconnecting the**

system's wiring could result in accidental inflation of the SRS airbag or could make the system inoperative, which may result in serious injury.

CAUTION

If you need service or repair in areas indicated in the following list, have the work performed by an authorized SUBARU dealer. The SRS airbag control module, impact sensors and airbag modules are stored in these areas.

- Under the center of the instrument panel
- On both the right and left sides at the front of the vehicle
- Steering wheel and column and nearby areas
- Bottom of the steering column and nearby areas
- Top of the dashboard on front passenger's side and nearby areas
- Each front seat and nearby area
- Inside each center pillar
- Inside each front door
- In each roof side (from the front pillar to a point over the rear seat)
- Between the rear seat cushion and rear wheel house on each side
- Under the rear center seat

In the event that the SRS airbag is deployed, replacement of the system should be performed only by an authorized SUBARU dealer. When the components of the SRS airbag system are replaced, use only genuine SUBARU parts.

NOTE

In the following cases, contact your SUBARU dealer as soon as possible.

- The front part of the vehicle was involved in an accident in which only the driver's SRS frontal airbag or both driver's and front passenger's SRS frontal airbags did not deploy.
- The pad of the steering wheel, the cover over the front passenger's SRS frontal airbag, or either roof side (from the front pillar to a point over the rear seat) is scratched, cracked, or otherwise damaged.
- The center pillar, front door, rear wheel house or rear sub frame, or an area near these parts, was involved in an accident in which the SRS side airbag and SRS curtain airbag did not deploy.
- The fabric or leather of either front seatback is cut, frayed, or otherwise damaged.
- The rear part of the vehicle was involved in an accident in which no SRS airbag was deployed.

Precautions against Vehicle Modification

WARNING

- To avoid accidental activation of the system or rendering the system inoperative, which may result in serious injury, no modifications should be made to any components or wiring of the SRS airbag system.
  This includes following modifications.
  - Installation of custom steering wheels
  - Attachment of additional trim materials to the dashboard
  - Installation of custom seats
  - Replacement of seat fabric or leather

– CONTINUED –

- **Installation of additional fabric or leather on the front seat**
- **Attachment of a hands-free microphone or any other accessory to a front pillar, a center pillar, a rear pillar, the windshield, a side window, an assist grip, or any other cabin surface that would be near a deploying SRS curtain airbag.**
- **Installation of additional electrical/electronic equipment such as a mobile two-way radio on or near the SRS airbag system components and/or wiring is not advisable. This could interfere with proper operation of the SRS airbag system.**
- **Modifications on or inside the front door panels for the purpose of a speaker replacement or sound insulation**

- **The impact sensors, which detect the pressure of an impact, are located in the doors. Do not modify any components of the doors or door trims, such as the addition of door speakers for example. Any modifications to the doors will create a risk of the airbag system becoming inoperative or unintended airbag deployment.**

CAUTION

Do not perform any of the following modifications. Such modifications can interfere with proper operation of the SRS airbag system.

- **Attachment of any equipment (bush bar, winches, snow plow, skid plate, etc.) other than genuine SUBARU accessory parts to the front end.**
- **Modification of the suspension system or front end structure.**
- **Installation of a tire of different size and construction from the tires specified on the vehicle placard attached to the driver's door pillar or specified for individual vehicle models in this Owner's Manual.**
- **Attachment of any equipment (side steps or side sill protectors, etc.) other than genuine SUBARU accessory parts to the side body.**

Always consult your SUBARU dealer if you want to install any accessory parts on your vehicle.

How to Contact the Vehicle Manufacturer concerning Modifications for Persons with Disabilities That May Affect the Advanced Airbag System

Changing or moving any parts of the front seats, rear seat, seatbelts, front bumper, front side frame, radiator panel, instrument panel, combination meter, steering wheel, steering column, tire, suspension or floor panel can affect the operation of the SUBARU advanced airbag system. If you have any questions, you may contact the following SUBARU distributors.

<Continental U.S., Alaska and the District of Columbia>
Subaru of America, Inc.
Customer Retailer Services Department
One Subaru Drive
P.O. Box 9103
Camden, NJ 08101-9877
1-800-SUBARU3 (1-800-782-2783)

<Hawaii>
Subaru Hawaii
2850 Pukoloa Street, Ste. 101,
Honolulu, HI 96819
877-215-0338

<Guam>
Shen's Corporation dba Prestige Automobile
491 East Marine Corps Drive,
Dededo, Guam 96929
671-633-2698

<Puerto Rico>
Trebol Motors
P.O. Box 11204, San Juan, Puerto Rico 00910
787-793-2828

<Canada>
Subaru Canada, Inc.
Consumer Support Department
560 Suffolk Court, Mississauga, Ontario L5R 4J7
1-800-894-4212

There are currently no SUBARU distributors in any other U.S. territories. If you are in such an area, please contact the SUBARU distributor or dealer from which you bought your vehicle.

2-1. Keys 113
Key Number Plate 113
2-2. Keyless Access with Push-Button Start System (If Equipped) 113
Safety Precautions 114
Locking and Unlocking with “Keyless Access” Entry Function 118
Unlock Using PIN Code Access 122
Power Saving Function 124
Power Saving Function of Access Key Fob 125
Disabling Keyless Access Function 125
Selecting Audible Signal Operation 128
Selecting Hazard Warning Flasher Operation 128
Warning Chimes and Warning Indicator 128
When Access Key Fob Does Not Operate Properly 128
Replacing Battery of Access Key Fob 128
Replacing Access Key Fob 128
Certification for Keyless Access with Push-Button Start System 128
2-3. Immobilizer 130
Security Indicator Light 130
Key Replacement 130
Certification for Immobilizer System 130
2-4. Remote Keyless Entry System 132
Locking the Doors 133
Unlocking the Doors 133
Opening the Trunk Lid (Legacy) 133
Unlocking the Rear Gate (Outback) 133
Setting Audible Signal Operation 133
Selecting Hazard Warning Flasher Operation 134
Vehicle Finder Function 134
Sounding a Panic Alarm 134
Replacing the Battery 134
Replacing Lost Transmitters 135
Certification for Remote Keyless Entry System 135
2-5. Door Locks 136
Locking and Unlocking from the Outside 136
Locking and Unlocking from the Inside 137
Automatic Door Locking/Unlocking 138
Key Lock-In Prevention Function 138
Battery Drainage Prevention Function 139
2-6. Alarm System 140
Alarm System Operation 140
Arming the System 140
Disarming the System 141
Alarm System Setting 142
If You Have Accidentally Triggered the Alarm System 142
Valet Mode 142
2-7. Child Safety Locks 143
2-8. Windows 143
Power Window Operation 144
Initialization of Power Window (Windows with One-Touch Auto up and down Function) 146
2-9. Trunk Lid (Legacy) 146
To Open and Close the Trunk Lid from Outside 146
To Open the Trunk Lid from Inside 147
Internal Trunk Lid Release Handle 147

2-10. Rear Gate (Outback) 149
Manual Rear Gate 149
Power Rear Gate (If Equipped) 150

2-11. Moonroof (If Equipped) 159
Moonroof Switches 159
Sun Shade 160

2-1. Keys

NOTE

For models with “keyless access with push-button start system”, refer to “Keyless Access with Push-Button Start System” ☞P113.

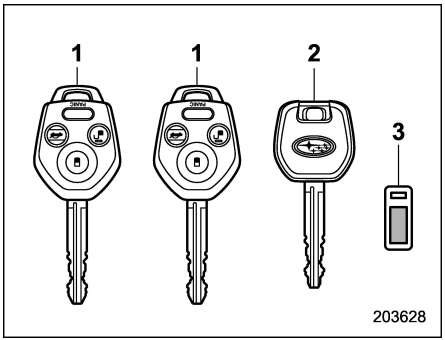

1) Master key
2) Valet key
3) Key number plate

Two types of keys are provided for your vehicle:

Master key and valet key.

The master key fit all locks on your vehicle.

- Ignition switch
- Driver’s door
- Glove box

The valet key fits only the ignition switch and door locks. You can keep the glove box locked when you leave your vehicle and valet key at a parking facility.

NOTE

Locking/unlocking using the remote keyless entry system can also be controlled with the buttons on the key. For detailed information, refer to “Remote Keyless Entry System” ☞P132.

⚠ CAUTION

Do not attach a large key holder or key case to either key. If it bangs against your knees while you are driving, it could turn the ignition switch from the “ON” position to the “ACC” or “LOCK” position, thereby stopping the engine.

■ Key Number Plate

The key number is stamped on the key number plate attached to the key set. Write down the key number and keep it in another safe place, not in the vehicle. This number is needed to make a replacement key if you lose your key or lock it inside the vehicle. Refer to “Key Replacement” ☞P130.

2-2. Keyless Access with Push-Button Start System (If Equipped)

The following access key fobs are provided with the vehicle.

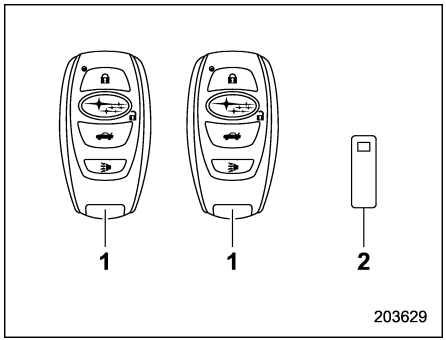

1) Access key fob
2) Key number plate

The keyless access with push-button start system allows you to perform the following functions when you are carrying the access key fob.

- Locking and unlocking of the doors, fuel filler lid and rear gate (Outback)
- Opening the trunk (Legacy)
- Starting and stopping the engine. For detailed information, refer to “Starting and Stopping Engine (Models with Push-But-

– CONTINUED –

ton Start System)” ☞P327.

- Arming and disarming the alarm system. For detailed information, refer to “Alarm System” ☞P140.

NOTE

- **Locking and unlocking by the remote keyless entry system can also be controlled with the buttons on the access key fob. For detailed information, refer to “Remote Keyless Entry System” ☞P132.**
- **Carefully store the key number plate supplied with the access key fob. It is necessary for vehicle repair and additional registration of access key fobs. For details, refer to “Key Replacement” ☞P130.**

An emergency key is attached to each access key fob.

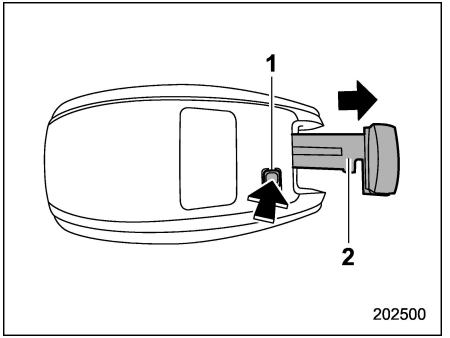

1) Release button
2) Emergency key

While pressing the release button of the access key fob, take out the emergency key.

The emergency key is used for the following operations.

- Locking and unlocking the driver’s door
- Locking and unlocking the glove box

NOTE

The glove box can be kept locked when you leave your vehicle and the access key fob (with the emergency key removed) at a parking facility.

■ Safety Precautions

WARNING

If you wear an implanted pacemaker or an implanted defibrillator, stay at least 8.7 in (22 cm) away from the transmitting antennas installed on the vehicle.

The radio waves from the transmitting antennas on the vehicle could adversely affect the operation of implanted pacemakers and implanted defibrillators.

If you wear electronic medical equipment other than an implanted pacemaker or an implanted defibrillator, before using the keyless access with push-button start system, refer to “Radio waves used for the keyless access with push-button start system” mentioned later, and contact the electronic medical equipment manufacturer for more information. The radio waves from the transmitting antennas on the vehicle could adversely affect the operation of the electronic medical equipment.

“Radio waves used for the keyless access with push-button start system”

- **The keyless access with push-button start system uses radio waves of the following frequency* in addition to the radio waves used for the remote keyless entry system. The radio waves are periodically output from the antennas installed on the vehicle as shown in the following illustrations.**

  ***: Radio frequency: 134 kHz**

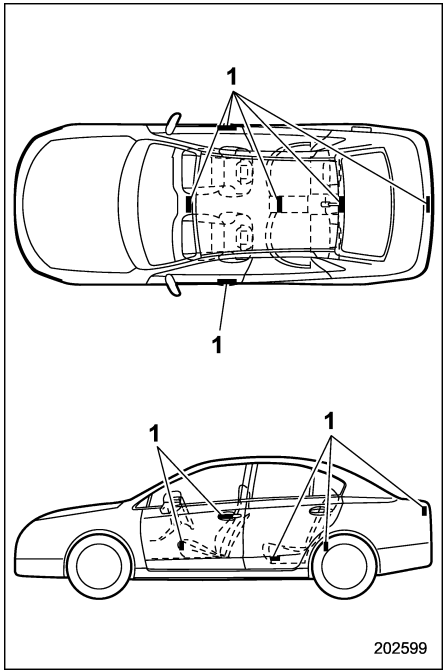

Legacy
1) Antenna

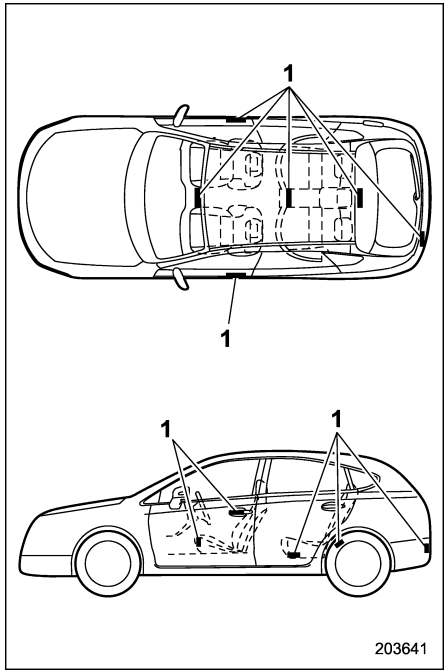

Outback
1) Antenna

– CONTINUED –

CAUTION

- Never leave or store the access key fob inside the vehicle or within 6.6 ft (2 m) around the vehicle (e.g., in the garage). The access key fob may be locked inside the vehicle, or the battery may discharge rapidly. Note that the push-button ignition switch may not turn on in some cases depending on the location of the access key fob.
- The access key fob contains electronic components. Observe the following precautions to prevent malfunctions.
  - It is recommended to have the access key fob battery replaced at an authorized SUBARU dealer to avoid the risk of damage.
  - Do not get the access key fob wet. If the access key fob gets wet, wipe it off immediately and let it dry completely.
  - Do not apply strong impacts to the access key fob.
  - Never leave the access key fob in direct sunlight or anywhere that may become hot, such as on the dashboard. It may damage the battery or cause circuit malfunctions.
  - Do not wash the access key fob in an ultrasonic washer.
  - Do not leave the access key fob in humid or dusty locations. Doing so may cause malfunctions.
  - Keep the access key fob away from magnetic sources.
  - Do not leave the access key fob near a personal computer or home electrical appliance.
  - Do not leave the access key fob near a battery charger or any electrical accessories.
  - Do not apply metallic window tint or attach metallic objects to the windows.
  - Do not fit non genuine accessories or parts.
- If the access key fob is dropped, the integrated emergency key inside may become loose. Be careful not to lose the emergency key.
- When traveling in an airplane, do not press the button of the access key fob. If any button of the access key fob is pressed, radio waves are emitted and may affect the operation of the airplane. In a bag, take measures to prevent the buttons from being pressed accidentally.

NOTE

- The operational/non-operational setting for the keyless access function can be changed. For the setting procedure, refer to “Disabling Keyless Access Function” ☞P125.
- For detailed information about the operation method for the push-button ignition switch while the keyless access function is switched to the non-operational mode, refer to “Access Key Fob – If Access Key Fob Does Not Operate Properly” ☞P456.
- The keyless access with push-button start system uses weak radio waves. The status of the access key fob and environmental conditions may interfere with the communication between the access key fob and the vehicle under the following conditions, and it may not be possible to lock or unlock the doors or start the engine.
  - When operating near a facility where strong radio waves are transmitted, such as a broadcast station

and power transmission lines.
– When products that transmit radio waves are used, such as an access key fob or a remote transmitter key of another vehicle.
– When carrying the access key fob of your vehicle together with the access key fob or the remote transmitter of another vehicle.
– When the access key fob is placed near wireless communication equipment such as a cell phone.
– When the access key fob is placed near a metallic object.
– When metallic accessories are attached to the access key fob.
– When carrying the access key fob with an electronic appliance such as a laptop computer.
– When the battery of the access key fob is discharged.

- The access key fob is always communicating with the vehicle and is continuously using the battery. Although the life of the battery varies depending on the operating conditions, it is approximately 1 to 2 years. If the battery becomes fully discharged, replace it with a new one.
- If an access key fob is lost, it is recommended that all of the remaining access key fobs be reregistered. For reregistration of an access key fob, contact a SUBARU dealer.
- For a spare access key fob, contact a SUBARU dealer.
- Up to 7 access key fobs can be registered for one vehicle.
- Do not leave the access key fob in the storage spaces inside the vehicle, such as the door pocket, dashboard or inside the corner of the cargo area. Vibrations may damage the key fob or turn on the switch, possibly resulting in a lockout.
- After the vehicle battery is discharged or replaced, initialization of the steering lock system may be required to start the engine. In this case, perform the following procedure to initialize the steering lock.

(1) Turn the push-button ignition switch to the “OFF” position. For details, refer to “Switching Power Status” ☞P169.
(2) Open and close the driver’s door.
(3) Wait for approximately 10 seconds.

When the steering is locked, the initialization is completed.

- Do not leave the access key fob in the following places.
  – On the instrument panel
  – On the floor
  – Inside the glove box
  – Inside the door trim pocket
  – On the rear seat
  – On the rear shelf (Legacy)
  – Inside the trunk (Legacy)
  – In the cargo area (Outback)

If you do, the following situations may occur.
– The access key fob is mistakenly locked inside the vehicle.
– A false warning issues although no malfunction actually occurs.
– No warning issues even when a malfunction occurs.

– CONTINUED –

■ Locking and Unlocking with "Keyless Access" Entry Function

When the access key fob is carried within the operating range, the doors, the fuel filler lid, the trunk (Legacy) and the rear gate (Outback) can be locked/unlocked just by touching the door handle.

NOTE

The vehicle can also be locked/unlocked with the remote keyless entry system. For details, refer to "Remote Keyless Entry System" ☞P132.

▼ Operating ranges

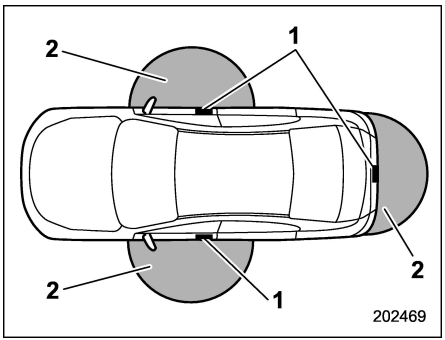

Legacy
1) Antenna
2) Operating range (approximately 16 to 32 in (40 to 80 cm))

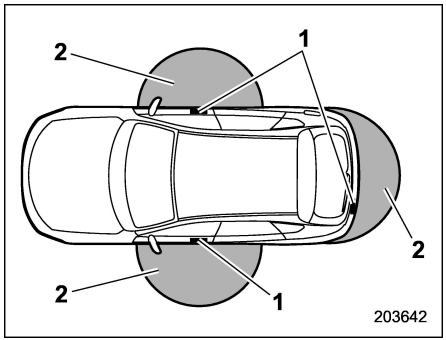

Outback
1) Antenna
2) Operating range (approximately 16 to 32 in (40 to 80 cm))

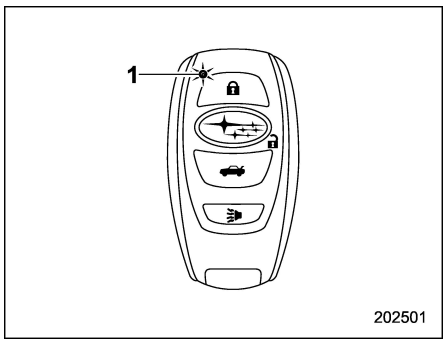

1) LED indicator

When the access key fob is within either of the operating ranges of the front doors, the LED indicator on the access key fob flashes. When the keyless access functions are disabled, the LED indicator does not flash unless a button on the access key fob is pressed.

NOTE

- **If the access key fob is placed too close to the vehicle body, the keyless access functions may not operate properly. If it does not operate properly, repeat the operation from farther away.**
- **If the access key fob is placed near the ground or in an elevated location from the ground, even if it is in the indicated operating range, the keyless access function may not operate properly.**
- **When the access key fob is within the operating range, it is possible for anyone, even someone who is not carrying the access key fob, to operate the keyless access function. Note that the keyless access function can be operated only by the door handle, door lock sensor, rear gate opener button or rear lock button in the operating range in which the access key fob is detected.**
- **It is not possible to lock the doors, rear gate and fuel filler lid using the keyless access function when the ac-**

cess key fob is inside the vehicle. However, depending on the status of the access key fob and the environmental conditions, the access key fob may be locked inside the vehicle. Before locking the vehicle, make sure that you have the access key fob.

- **When the battery of the access key fob is discharged, or when operating it in a location with strong radio waves or noise (e.g., near a radio tower, power plant, broadcast station or an area where wireless equipment is used), or while talking on a cell phone, the operating ranges may be reduced, or the keyless access function may not operate.**

In such a case, perform the procedure described in "Locking and Unlocking" ☞P457.

- **The doors may lock or unlock when the car is being washed or exposed to a significant amount of water that touches the door handle while the key fob is still in the operating range.**

▼ How to lock and unlock

It is possible to perform the following operations when you are carrying the access key fob.

- Lock and unlock the doors and the fuel filler lid
- Unlock the trunk lid (Legacy)
- Unlock and lock rear gate (Outback)

NOTE

- **It is not possible to lock the doors, rear gate and fuel filler lid using the keyless access function when the push-button ignition switch is in the "ACC" or "ON" position. Refer to "Switching Power Status" ☞P169.**
- **If the door handle is gripped with a gloved hand, the door lock may not be released.**
- **If the door lock sensor is touched three times or more repeatedly, the system will ignore the sensor operation.**
- **When performing the locking procedure too quickly, locking may not complete. After performing the locking procedure, it is recommended to pull the rear door handle to confirm that the doors have been locked.**
- **If any of the doors (or the rear gate) are not fully closed, the following will occur to alert you that the doors (or the rear gate) are not properly closed.**
  - **An electronic chirp sounds five times.**
  - **The hazard warning flashers flash five times.**
- **It is possible to lock the doors even when one of the doors is open. After performing the locking procedure, close the opened door or rear gate to lock it.**
- **Within 3 seconds after locking the doors and the rear gate using the keyless access function, it is not possible to unlock doors and/or the rear gate using the keyless access function.**
- **When locking, be sure to carry the access key fob to prevent locking the access key fob in the vehicle.**
- **The setting of the hazard warning flasher operation and the volume of the audible signal can be changed by your SUBARU dealer. Contact your SUBARU dealer for details. Also, for models with the center information display, the setting of the hazard warning flasher operation can be changed by operating the center information display. For details, refer to "Car settings" ☞P215.**

– CONTINUED –

▽ **Locking with the door lock sensor**

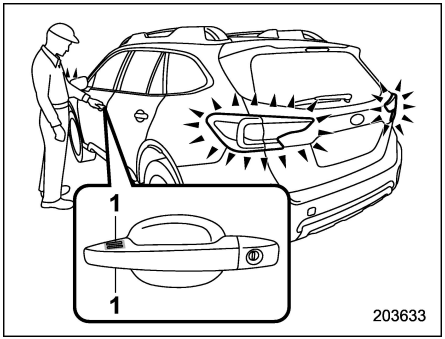

1) Door lock sensor

Carry the access key fob, close all doors (for Outback, including the rear gate) and touch the door lock sensor on the door handle. All doors including the rear gate and the fuel filler lid will be locked. Also, an electronic chirp will sound once and the hazard warning flashers will flash once.

NOTE

After touching the door lock sensor to lock all of the doors (including the rear gate), if you touch the door lock sensor once more to attempt the lock operation without first unlocking the doors, nothing will happen, even if the door lock sensor is touched. In this case, perform the unlocking operation once first. You can then touch the door lock sensor to lock the doors.

▽ **Locking with the rear lock button (Outback)**

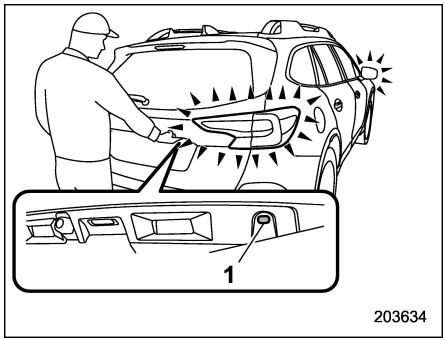

1) Rear lock button

Carry the access key fob, close all doors including the rear gate and press the rear lock button. The rear gate, the fuel filler lid and all doors will be locked. Also, an electronic chirp will sound once and the hazard warning flashers will flash once.

▽ **Locking with the power rear gate lock button (Outback – if equipped)**

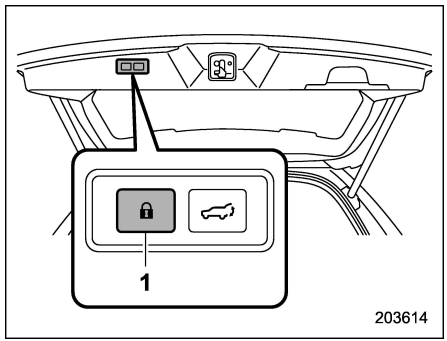

1) Power rear gate lock button

Carry the access key fob, and press the power rear gate lock button. It will close automatically, and the rear gate, all doors and the fuel filler lid will be locked. Also, the hazard warning flashers will flash once, and an electronic chirp will sound once.

▽ Unlocking

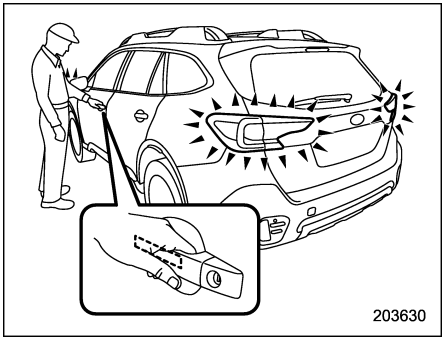

Carry the access key fob, and touch the sensor behind the door handle.

- When the driver's door handle is gripped, only the driver's door and the fuel filler lid will be unlocked.
- When the front passenger's door handle is gripped, all doors (for Outback, including the rear gate) and the fuel filler lid will be unlocked.

Also, an electronic chirp will sound twice and the hazard warning flashers will flash twice.

▽ Opening rear gate (Outback)

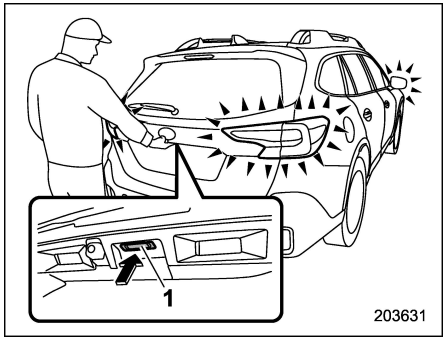

1) Rear gate opener button

Carry the access key fob, and press the rear gate opener button. Only the rear gate will be unlocked and opened. Also, an electronic chirp will sound twice and the hazard warning flashers will flash twice.

▽ Opening trunk (Legacy)

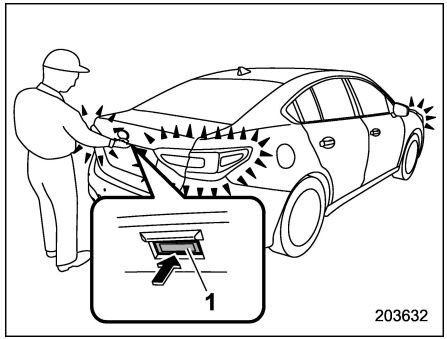

1) Trunk opener button

Carry the access key fob, and press the trunk opener button. The trunk will open.

An electronic chirp will sound twice and the hazard warning flashers will flash twice.

NOTE

Under the following conditions, the trunk can be opened without the key fob.

- **The trunk lock/unlock setting is on.**
- **All doors are unlocked.**

– CONTINUED –

The trunk lock/unlock setting can be changed by a SUBARU dealer. Contact your SUBARU dealer to change the setting.

▼ Door unlock selection function

When the door is unlocked using the keyless access function, only the doors that were set and the fuel filler lid can be unlocked.

The settings can be changed with the following methods.

- The setting can be changed by operating the center information display.

For details, refer to “Car settings” ☞P215.

- The setting can be changed by a SUBARU dealer.

■ Unlock Using PIN Code Access

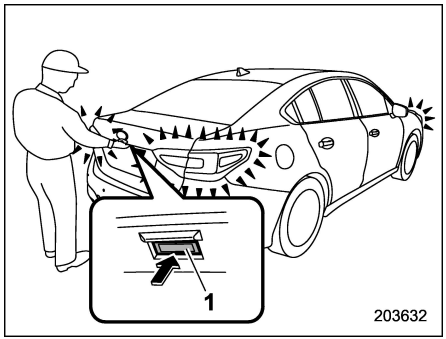

1) Trunk opener button (Legacy)

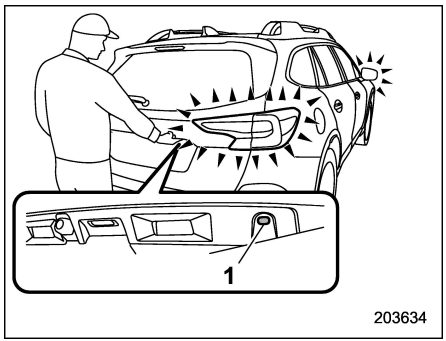

1) Rear lock button (Outback)

While all doors (for Outback, including the rear gate) are locked, you can unlock the doors (including rear gate) without a key by performing the following procedure.

- Legacy: press the trunk opener button
- Outback: press the rear lock button

NOTE

PIN Code Access will be helpful if the key is accidentally left in the vehicle. It is recommended that a 5-digit security code (PIN code) is registered.

▼ Registration for a PIN code

Steps		Operation	Time from the previous step
1		Turn off the ignition switch.	—
2		Close all doors (including trunk/rear gate).	—
3		Press and hold the "🔒" button on the access key fob, then press and hold the trunk opener button (Legacy)/rear lock button (Outback) until a chirp sounds intermittently.	—
4		Press the "🔓" button on the access key fob.	Within 30 seconds
5		Input the PIN code using the trunk opener button (Legacy)/rear lock button (Outback) within 30 seconds after the chirp sound of step 4. For example, to register "32468" as the PIN code, perform the following procedure.	Within 30 seconds
	(1)	Press the button three times.	
	(2)	After a chirp sounds once, press the button twice.	
	(3)	After a chirp sounds once, press the button four times.	
	(4)	After a chirp sounds once, press the button six times.	
	(5)	After a chirp sounds once, press the button eight times.	
6		Perform step 5 again within approximately 30 seconds after the chirp starts sounding intermittently.	—
7		All doors will be unlocked and locked. Then the PIN code will be registered.	—

NOTE

Press the "🔓" button within 30 seconds of step 6 to end the preparation mode and move on to the registration stage. Unless the "🔓" button is pressed within 30 seconds after step 6, the PIN code registration will be canceled.

– CONTINUED –

NOTE

- **Press the trunk opener button/rear lock button ten times to enter "0".**
- **Change the PIN code frequently to protect your vehicle from theft.**
- **If you have lent your vehicle to another person, confirm that the PIN code has not been changed or deleted. If the PIN code has been changed or deleted, reregister a new PIN code.**
- **If you make an error during the registration procedure, press the "🔒" or "🚗" button on the access key fob. Then, start over from the procedure described in "Preparation".**
- **To protect your vehicle from theft, you cannot register "00000" to "99999" or "12345" as a PIN code.**
- **Do not register your vehicle license plate number or simple numbers such as "11122" or "12121" as a PIN code. Doing so will increase the risk of vehicle theft.**
- **When you try to register "22222", the registered PIN code will be deleted. You cannot unlock the doors by PIN Code Access until a new code is registered.**
- **After registering a new PIN code, make sure that you can unlock the doors using the PIN code.**
- **The PIN code cannot be deleted while the keyless access function is disabled by operating the access key fob.**
- **Reregister the PIN code in the following case.**
  - **When you forget the PIN code**
  - **When you want to change the PIN code**

▼ Unlocking

Perform steps (1) to (5) of step 5 described in "Registration".

NOTE

- **You cannot unlock by PIN Code Access in the following cases.**
  - **When the access key fob is within the operating ranges**
  - **When the ignition switch is in the "ACC" or "ON" position**
- **If you make an operation error during the unlocking procedure, start over with the unlocking procedure after waiting for 5 seconds or longer.**
- **To protect your vehicle from theft, a buzzer will sound if incorrect PIN codes are entered five times continuously. If this occurs, you cannot unlock the doors by PIN Code Access for 5 minutes.**

■ Power Saving Function

To protect the access key fob battery and the vehicle battery, the keyless access function will be disabled as follows.

- When the keyless access function and the remote keyless entry system have not been used:
  (1) 5 days after the push-button ignition switch has been turned off, communication between the antennas and the access key fob will be stopped.
  (2) 9 days after step (1), the sensors (both lock sensor and unlock sensor) on the front passenger's door will be disabled.
- When the access key fob has been left in the operating range for 10 minutes or longer while all doors are locked, the keyless access function will be disabled.

▼ Recovery from power saving mode

When one of the following operations is performed, the keyless access function will be recovered.

- Unlock by gripping the door handle (only when the sensors on the front passenger's door are not disabled) or pressing the rear gate opener button on the rear gate (Outback)/trunk opener button on the trunk lid (Legacy)
- Lock or unlock by the remote keyless

entry system

- Open a door and then close it
- Turn the push-button ignition switch to the “ON” position

Power Saving Function of Access Key Fob

This function stops the access key fob from receiving signals and helps minimize the battery consumption of the access key fob.

1. Press the “🔒” button twice while holding the “🔒” button.

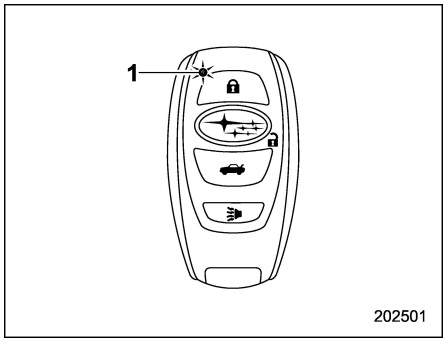

1) LED indicator

2. Confirm that the LED indicator blinks 4 times to notify that the setting is complete.

When the access key fob is in the power save mode, the keyless access function and push-button start system will not be available.

To cancel the power save mode, press one of the buttons on the access key fob.

Disabling Keyless Access Function

WARNING

If you have an implanted pacemaker or an implanted defibrillator, perform the procedure “By operating the driver’s door” ☞P127 to disable the keyless access function. If you perform the procedure “By operating the access key fob” ☞P126, the operation of an implanted pacemaker or implanted defibrillator may be affected by the radio waves from the transmitter antenna.

When the vehicle is not going to be used for a long time, or when you choose not to use the keyless access function, the keyless access function can be disabled.

NOTE

- **The locking and unlocking function by the remote keyless entry system is not disabled.**
- **To start the engine while the functions are disabled, perform the procedure described in “Starting Engine” ☞P457.**

– CONTINUED –

▼ Disabling functions

▽ By operating the access key fob

To disable the keyless access function by operating the access key fob, register a PIN code for PIN Code Access. For details about registering a PIN code, refer to “Unlock Using PIN Code Access” ☞P122.

1. Open the driver’s door.

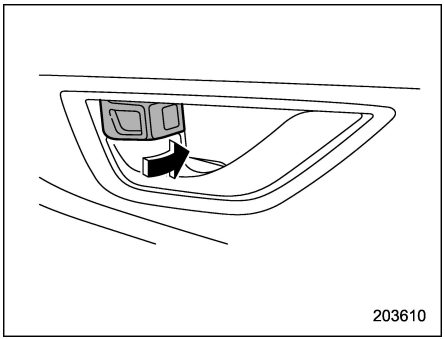

2. Rotate the lock lever forward.

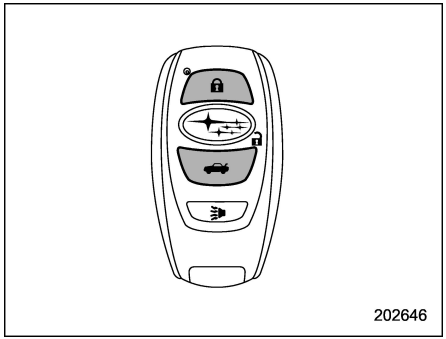

3. Press and hold the “🔒” button and “🚗” button on the access key fob simultaneously for more than 5 seconds.

A chirp sound will be heard, and the function will be disabled.

▽ By operating the driver's door

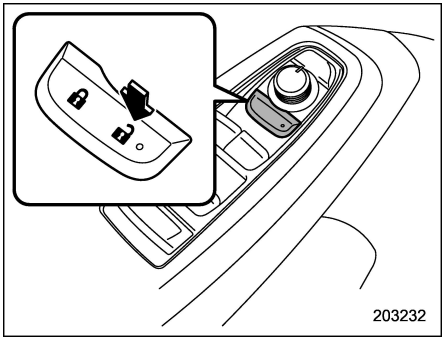

To disable the keyless access function by operating the driver's door, perform the following procedures.

Steps	Operation	Time	Status
1	Sit in the driver's seat, and close the door.	—	Close
2	Push "🔒" on the power door locking switch.	—	Close
3	Open the driver's door.	Within 5 sec.	Close→Open
4	Push "🔒" on the power door locking switch twice.	Within 5 sec.	Open
5	Close and open the driver's door twice.	Within 10 sec.	Open→Close→ Open→Close→Open
6	Push "🔒" on the power door locking switch twice while the door is open.	Within 10 sec.	Open
7	Close and open the driver's door once.	Within 10 sec.	Open→Close→Open
8	Close the door.	Within 5 sec.	Open→Close

A chirp will sound and the functions will be disabled.

– CONTINUED –

NOTE

In steps 4 and 6, press the power door locking switch firmly. If the switch is not pressed firmly, the functions may not be disabled.

▼ Enabling functions

When the procedure to disable the functions is performed again, a chirp sound will be heard, and the functions are enabled.

NOTE

- **The keyless access function will be enabled only if you perform the procedure in the same manner you disabled the function (for example, when disabling by operating the driver's door, the function will not be enabled even if you operate the access key fob).**
- **Press the push-button ignition switch if you do not know the procedure in which the keyless access function was disabled.**
  - **When disabling by operating the driver's door: a chirp will not be heard**
  - **When disabling by operating the access key fob: a chirp will be heard**

■ Selecting Audible Signal Operation

Using an electronic chirp, the system will give you an audible signal when the doors are locked or unlocked. If desired, you can turn the audible signal off by operating the center information display. For details, refer to "Car settings" ☞P215.

Furthermore, the volume setting of the audible signal can also be changed by a SUBARU dealer. Consult your SUBARU dealer for details.

■ Selecting Hazard Warning Flasher Operation

Using the hazard warning flasher, the system will give you a visible signal when the doors are locked or unlocked. If desired, you can turn the hazard warning flashers off by operating the center information display. For details, refer to "Car settings" ☞P215. The setting can also be changed by a SUBARU dealer. Consult your SUBARU dealer for details.

■ Warning Chimes and Warning Indicator

The keyless access with push-button start system is equipped with a warning chime and the access key warning indicator in order to minimize improper operations and help protect your vehicle from theft.

For details, refer to "Warning Chimes and Warning Indicator of the Keyless Access with Push-Button Start System" ☞P187.

■ When Access Key Fob Does Not Operate Properly

Refer to "Access Key Fob – If Access Key Fob Does Not Operate Properly" ☞P456.

■ Replacing Battery of Access Key Fob

Refer to "Replacing Battery of Access Key Fob" ☞P515.

■ Replacing Access Key Fob

Access key fobs can be replaced at SUBARU dealers. For more details, contact a SUBARU dealer.

■ Certification for Keyless Access with Push-Button Start System

- **U.S.-spec. models**

FCC ID: HYQ14AHK
FCC ID: Y8PFJ18-2
FCC ID: Y8PSSPIMB02

CAUTION

FCC WARNING

Changes or modifications not expressly approved by the party responsible for compliance could void the user's authority to operate the equipment.

This device complies with part 15 of the FCC Rules. Operation is subject to the following two conditions: (1) This device may not cause harmful interference, and (2) this device must accept any interference received, including interference that may cause undesired operation.

- **Canada-spec. models**

NOTE

This device complies with Industry Canada's licence-exempt RSSs. Operation is subject to the following two conditions: (1) This device may not cause interference; and (2) This device must accept any interference, including interference that may cause undesired operation of the device.

REMARQUE

Le présent appareil est conforme aux CNR d'Industrie Canada applicables aux appareils radio exempts de licence. L'exploitation est autorisée aux deux conditions suivantes: (1) l'appareil ne doit pas produire de brouillage; (2) l'utilisateur de l'appareil doit accepter tout brouillage radioélectrique subi, même si le brouillage est susceptible d'en compromettre le fonctionnement.

203226

- **Mexico-spec. models**

Este equipo opera a título secundario, consecuentemente, debe aceptar interferencias perjudiciales incluyendo equipos de la misma clase y puede no causar interferencias a sistemas operando a título primario.

500612

IFT
RLVDE1415-1661
14AHK
DENSO

2-3. Immobilizer

The immobilizer system is designed to prevent an unauthorized person from starting the engine. Only keys registered with your vehicle's immobilizer system can be used to operate your vehicle. If engine start is attempted with an unregistered access key fob or key, the engine will not start. Even if the engine does start, it will stop after a few seconds. This system, however, is not a 100% anti-theft guarantee.

CAUTION

- **Do not place the key under direct sunlight or anywhere it may become hot.**
- **Do not get the key wet. If the key gets wet, wipe it dry with a cloth immediately.**
- **Do not modify or remove the system. If modified or removed, the proper operation of the system cannot be guaranteed.**

NOTE

- **To protect your vehicle from theft, please pay close attention to the following security precautions:**
  - **Never leave your vehicle unattended with its keys inside.**
  - **Before leaving your vehicle, close all windows and the moonroof, and lock the doors (all models) and rear gate (Outback).**
  - **Do not leave spare keys or any record of your key number in the vehicle.**
- **The vehicle has a maintenance-free type immobilizer system.**

■ Security Indicator Light

Refer to "Security Indicator Light" ☞P192.

■ Key Replacement

Your key number plate will be required if you ever need a replacement key made. Any new key must be registered for use with your vehicle's immobilizer system before it can be used. The maximum number of keys that can be registered for use with one vehicle is as follows.

- Four (models without "keyless access with push-button start system")
- Seven (models with "keyless access with push-button start system")

One key that has already been registered is required in order to register a new key.

NOTE

If you lose a key, the lost key's ID code still remains in the memory of the vehicle's immobilizer system. For security reasons, the lost key's ID code should be erased from the memory. To erase the lost key's ID code, all keys that will be used are required.

For details about new key registration and erasing the lost key's ID code, contact your SUBARU dealer.

■ Certification for Immobilizer System

- **For models with "keyless access with push-button start system":**

Refer to "Certification for Keyless Access with Push-Button Start System" ☞P128.

- **For models without "keyless access with push-button start system":**
  - **U.S.-spec. models**

FCC ID: Y8PFJ18-3

CAUTION

FCC WARNING
Changes or modifications not expressly approved by the party responsible for compliance could void the user's authority to operate the

equipment.

This device complies with part 15 of the FCC Rules. Operation is subject to the following two conditions: (1) This device may not cause harmful interference, and (2) this device must accept any interference received, including interference that may cause undesired operation.

– **Canada-spec. models**

NOTE

This device complies with Industry Canada's licence-exempt RSSs. Operation is subject to the following two conditions: (1) This device may not cause interference; and (2) This device must accept any interference, including interference that may cause undesired operation of the device.

REMARQUE

Le présent appareil est conforme aux CNR d'Industrie Canada applicables aux appareils radio exempts de licence. L'exploitation est autorisée aux deux conditions suivantes: (1) l'appareil ne doit pas produire de brouillage; (2) l'utilisateur de l'appareil doit accepter tout brouillage radioélectrique subi, même si le brouillage est susceptible d'en compromettre le fonctionnement.

203226

– **Mexico-spec. models**

Este equipo opera a título secundario, consecuentemente, debe aceptar interferencias perjudiciales incluyendo equipos de la misma clase y puede no causar interferencias a sistemas operando a título primario.

500612

2-4. Remote Keyless Entry System

CAUTION

- **Do not expose the remote transmitter to severe shocks, such as those experienced as a result of dropping or throwing.**
- **Do not take the remote transmitter apart except when replacing the battery.**
- **Do not get the remote transmitter wet. If it gets wet, wipe it dry with a cloth immediately.**
- **When you carry the remote transmitter on an airplane, do not press the button of the remote transmitter while in the airplane. When any button of the remote transmitter is pressed, radio waves are sent and may affect the operation of the airplane. When you carry the remote transmitter in a bag on an airplane, take measures to prevent the buttons of the remote transmitter from being pressed.**

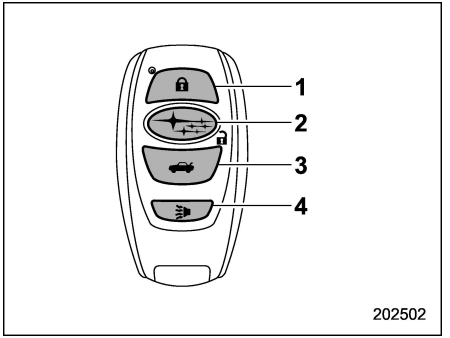

Access key fob

1) Lock/arm button
2) Unlock/disarm button
3) Trunk lid opener (Legacy)/Rear gate unlock button (Outback)
4) PANIC button

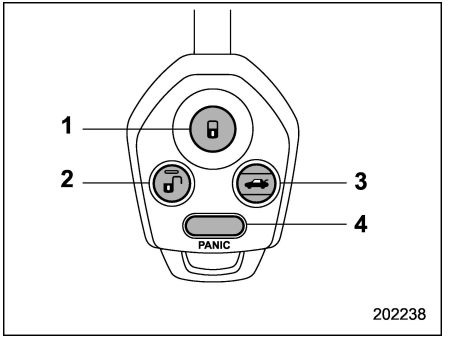

Transmitter

1) Lock/arm button
2) Unlock/disarm button
3) Trunk lid opener (Legacy)/Rear gate unlock button (Outback)
4) PANIC button

The remote keyless entry system has the following functions.

- Locking and unlocking the doors, rear gate (Outback) and fuel filler lid
- Opening the trunk lid (Legacy)
- Sounding a panic alarm
- Arming and disarming the alarm system. For details, refer to “Alarm System” ☞P140.

The operable distance of the remote keyless entry system is approximately 30 feet (10 meters). However, this distance will

vary depending on environmental conditions. The system's operable distance will be shorter in areas near a facility or electronic equipment emitting strong radio waves such as a power plant, broadcast station, TV tower, or remote controller of home electronic appliances.

NOTE

- **For models with "keyless access with push-button start system", the remote keyless entry system will not be activated when the push-button ignition switch is in any position other than the "OFF" position.**
- **For models without "keyless access with push-button start system", the remote keyless entry system will not be activated when the key is inserted in the ignition switch.**
- **The hazard warning flashers will flash once or twice when the access key fob/transmitter button is pressed in the following cases.**
  - **When locking the doors**
  - **When unlocking the doors**
  - **When unlocking the rear gate**

If desired, you can turn the hazard warning flashers off by operating the center information display. For details, refer to "Car settings" ☞P215. The setting can also be changed by a SUBARU dealer. Consult your SUBARU dealer for details.

■ Locking the Doors

Press the "🔒" button to lock all doors, the trunk (Legacy), rear gate (Outback) and fuel filler lid. An electronic chirp will sound once and the hazard warning flashers will flash once.

If any of the doors (or the rear gate/trunk lid) are not fully closed, the following will occur to alert you that the doors (or the rear gate/trunk lid) are not properly closed.

- An electronic chirp sounds five times.
- The hazard warning flashers flash five times.

When you close the door, it will automatically lock and then the following will occur.

- An electronic chirp sounds once.
- The hazard warning flashers flash once.

■ Unlocking the Doors

Press the "🔓" button to unlock the driver's door and fuel filler lid. An electronic chirp will sound twice and the hazard warning flashers will flash twice. To unlock all doors and the rear gate, briefly press the "🔓" button again within 5 seconds.

NOTE

If the interval between the first and second presses of the "🔓" button (for unlocking of all of the doors and the rear gate) is extremely short, the system may not respond.

■ Opening the Trunk Lid (Legacy)

Press and hold the "🚗" button to open the trunk lid. An electronic chirp will sound twice and the hazard warning flashers will flash twice.

This operation setting can be changed by a SUBARU dealer. Consult your SUBARU dealer for details.

■ Unlocking the Rear Gate (Outback)

Press the "🚗" button to unlock the rear gate. An electronic chirp will sound twice and the hazard warning flashers will flash twice.

This operation setting can be changed by a SUBARU dealer. Consult your SUBARU dealer for details.

■ Setting Audible Signal Operation

Using an electronic chirp, the system will

– CONTINUED –

give you an audible signal when the doors lock and unlock.

Models with "keyless access with push-button start system":

If desired, you can turn the audible signal off by operating the center information display. For details, refer to "Car settings" ☞P215. Furthermore, the volume setting of the audible signal can also be changed by a SUBARU dealer. Consult your SUBARU dealer for details.

Models without "keyless access with push-button start system":

Perform the following steps to deactivate the audible signal. Take the same steps to restore the function.

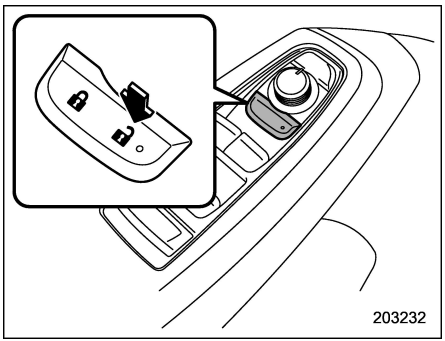

Steps		Operation	Time
1		Sit in the driver's seat.	—
2		Close all doors and the rear gate.	—
3	(1)	Press and hold "🔓" on the power locking switch.	Within 10 sec.
	(2)	Insert the key into the ignition switch and pull it out at least 6 times.	
4		Open and close the driver's door.	Within 10 sec.

The hazard warning flashers flash 3 times to indicate completion of the setting.

Your SUBARU dealer can perform the above procedure for you.

■ Selecting Hazard Warning Flasher Operation

Using the hazard warning flasher, the system will give you a visible signal when the doors are locked or unlocked. If desired, you can turn the hazard warning flashers off by operating the center information display. For details, refer to "Car settings" ☞P215 (11.6-inch display models) or "Vehicle setting icons" ☞P233 (dual 7.0-inch display models). The setting can also be changed by a SUBARU dealer. Consult your SUBARU dealer for details.

■ Vehicle Finder Function

Use this function to find your vehicle parked among many vehicles in a large parking lot. Provided you are within 30 feet (10 meters) of the vehicle, pressing the "🔒" button three times in a 5-second period will cause your vehicle's horn to sound once and its hazard warning flashers to flash three times.

NOTE

If the interval between presses is too short when you press the "🔒" button three times, the system may not respond to the signals from the remote transmitter.

■ Sounding a Panic Alarm

To activate the alarm, press the "PANIC" button once.

The horn will sound and the hazard warning flashers will flash.

To deactivate the panic alarm, press any button on the remote transmitter. If a button on the remote transmitter is not pressed, the alarm will be deactivated after approximately 30 seconds.

■ Replacing the Battery

Refer to "Replacing Battery" ☞P514.

■ Replacing Lost Transmitters

If you lose a transmitter or want to purchase additional transmitters (up to four can be programmed), you should reprogram all of your transmitters for security reasons. For details, contact your SUBARU dealer and have the transmitters programmed into the remote keyless entry system.

■ Certification for Remote Keyless Entry System

- **U.S.-spec. models**

FCC ID: CWTB1G077
FCC ID: CWTD1G141

⚠ CAUTION

FCC CAUTION

Changes or modifications not expressly approved by the party responsible for compliance could void the user's authority to operate the equipment.

This device complies with part 15 of the FCC Rules. Operation is subject to the following two conditions: (1) This device may not cause harmful interference, and (2) this device must accept any interference received, including interference that may cause undesired operation.

- **Canada-spec. models**

NOTE

This device complies with Industry Canada's licence-exempt RSSs. Operation is subject to the following two conditions: (1) This device may not cause interference; and (2) This device must accept any interference, including interference that may cause undesired operation of the device.

REMARQUE

Le présent appareil est conforme aux CNR d'Industrie Canada applicables aux appareils radio exempts de licence. L'exploitation est autorisée aux deux conditions suivantes: (1) l'appareil ne doit pas produire de brouillage; (2) l'utilisateur de l'appareil doit accepter tout brouillage radioélectrique subi, même si le brouillage est susceptible d'en compromettre le fonctionnement.

203226

- **Mexico-spec. models**

La operación de este equipo está sujeta a las siguientes dos condiciones:
(1) es posible que este equipo o dispositivo no cause interferencia perjudicial y
(2) este equipo o dispositivo debe aceptar cualquier interferencia, incluyendo la que pueda causar su operación no deseada.

202642

IFETEL RLVSUTB15-1814
SUBARU
MODEL: TB1G077

IFETEL RLVSUTD18-0302
SUBARU
MODEL: TD1G141

2-5. Door Locks

■ Locking and Unlocking from the Outside

NOTE

If you unlock the driver's door with a key (including an emergency key) and open the door while the alarm system is armed, the alarm system is triggered and the vehicle's horn sounds. In this case, perform any of the following operations:

Models with "keyless access with push-button start system":

- **Press any button on the access key fob (except when the access key fob battery is discharged).**
- **Turn the push-button ignition switch to the "ACC" position.**
- **Carry the access key fob and perform either of the following procedures.**
  - **Grip the front door handle.**
  - **Press the rear gate opener button.**

Models without "keyless access with push-button start system":

- **Press any button on the remote transmitter (except when the transmitter battery is discharged).**
- **Insert the key into the ignition switch and turn the ignition switch to the "ON" position.**

For details about the alarm system, refer to "Alarm System" ☞P140.

▼ How to lock and unlock the vehicle using the key

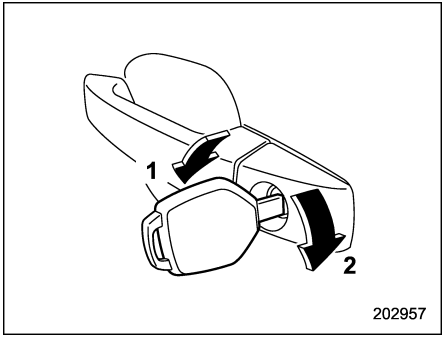

1) Rotate the key toward the front to lock.
2) Rotate the key toward the rear to unlock.

In this case, only the driver's side door is locked or unlocked.

NOTE

Models with "keyless access with push-button start system":

The emergency key is directional. If the key cannot be inserted, change the direction that the grooved side is facing and insert it again.

▼ How to lock the vehicle without using the key

To lock the door from outside without the key, the following methods are available.

▽ Locking using lock lever

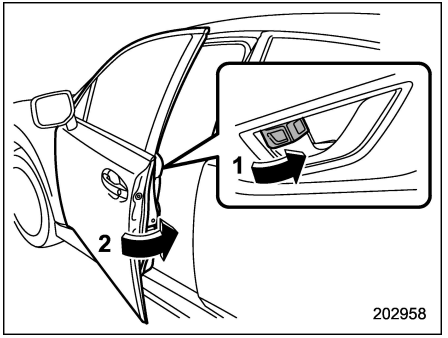

1) Rotate the lock lever forward.
2) Close the door.

In this way, only the door that was operated will be locked.

▽ **Locking using power door locking switch**

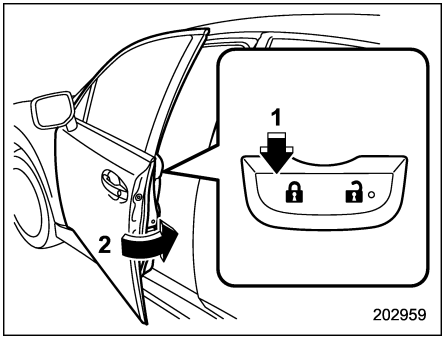

1) Press the 🔒 side of the power door locking switch*.
2) Close the door.

*: For details about the power door locking switch, refer to "How to operate the power door locking switches" ☞P138.

In this case, all closed doors, the fuel filler lid and the rear gate (Outback) are locked at the same time.

NOTE

Make sure that you do not leave the key inside the vehicle before locking the doors from the outside without the key.

■ Locking and Unlocking from the Inside

▼ **How to use the lock lever**

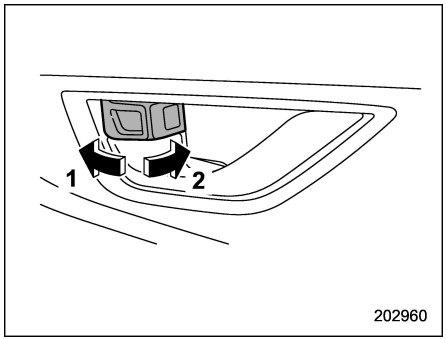

1) Rotate the lock lever rearward to unlock.
2) Rotate the lock lever forward to lock.

To lock the door from the inside, rotate the lock lever forward. To unlock the door from the inside, rotate the lock lever rearward.

The red mark on the lock lever appears when the door is unlocked.

Pull the inside door handle to open an unlocked door.

Always make sure that all doors and the rear gate (Outback) are closed before starting to drive.

⚠ WARNING

- **Keep all doors locked when you drive, especially when small children are in your vehicle.**

  Along with the proper use of seatbelts and child restraint systems, locking the doors reduces the chance of being thrown out of the vehicle in an accident.

  It also helps prevent passengers from falling out by preventing a door from being accidentally opened, and intruders from unexpectedly opening doors and entering your vehicle.
- **Do not pull the front door handle from inside while driving. The door could open even if it is locked.**

– CONTINUED –

▼ **How to operate the power door locking switches**

All doors, the rear gate (Outback) and fuel filler lid can be locked and unlocked by pressing either side of the power door locking switches located on the driver's side and the front passenger's side doors.

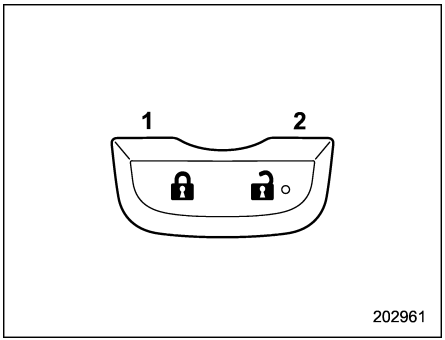

1) Lock
2) Unlock

NOTE

Make sure that you do not leave the key inside the vehicle before locking the doors from the outside using the power door locking switches.

■ Automatic Door Locking/Unlocking

All doors and the fuel filler lid are automatically locked or unlocked under the following conditions.

- For automatic door locking
  - When the vehicle speed reaches 12 mph (20 km/h) or higher (factory default setting).
  - When the select lever is shifted into a position other than the "P" position.
- For automatic door unlocking
  - When the driver's door is open (factory default setting).
  - When the ignition switch is turned to OFF.
  - When the select lever is shifted into the "P" position.

NOTE

- **The automatic door lock and unlock setting can be changed with the center information display. Refer to "Car settings" ☞P215 (11.6-inch display models) or "Vehicle setting icons" ☞P233 (dual 7.0-inch display models).**
- **When locking the door by the power door locking switches, automatic door locking will not operate.**
- **When unlocking the door by the power door locking switches, automatic door unlocking will not operate.**
- **If the system detects a strong enough impact to deploy the airbags, all doors may be automatically unlocked. For further details, refer to "Auto Lock/Unlock Operation When Involved in an Accident" ☞P461.**
- **When getting out of the vehicle from a rear door, make sure to unlock all the doors by pushing the unlock side of the power door locking switch. If a rear door is unlocked from the inside door lever then the door is opened and closed, the Key lock-in prevention function will be triggered. All doors will be unlocked, the Key lock-in prevention warning indicator " " will appear and the warning chime will also sound.**

■ Key Lock-In Prevention Function

Under the following conditions, all the doors will not lock when the power door locking switch is pushed with a front door open.

- The key is still in the ignition switch (models without "keyless access with push-button start system").
- The ignition switch is in the "ACC" or "ON" position (models with "keyless access with push-button start system").

NOTE

- **When leaving the vehicle, make sure you are holding the key before locking the doors.**
- **When getting out of the vehicle from a rear door, make sure to unlock all the doors by pushing the unlock side of the power door locking switch.**
- **When getting out of the vehicle from a rear door, make sure to unlock all the doors by pushing the unlock side of the power door locking switch. If a rear door is unlocked from the inside door lever then the door is opened and closed, the Key lock-in prevention function will be triggered. All doors will be unlocked, the Key lock-in prevention warning indicator " " will appear and the warning chime will also sound.**
- **The factory setting (default setting) for this function is set as "operational". This function's operational/non-operational setting can be changed by a SUBARU dealer. Contact a SUBARU dealer for details.**

▼ Non-operation of key lock-in prevention function

When the system is set so that it does not operate, the doors are locked by the following operation.

- If the lock lever is turned to the front ("LOCK") position with the driver's door open and the driver's door is then closed with the lock lever in that position, the driver's door is locked.
- If the spare key is used to lock the driver's door from the outside of the vehicle, the door is locked.

■ Battery Drainage Prevention Function

If a door or the rear gate (Outback) is not completely closed, the interior lights will remain illuminated as a result. However, several lights are automatically turned off by the battery drainage prevention function to prevent the battery from going dead. The following interior lights are affected by this function.

Item	Switch position	Automatically turning off
Map lights	DOOR	Approximately 20 minutes later
Dome light	DOOR	Approximately 20 minutes later
Ignition switch light	—	Approximately 20 minutes later
Cargo area light (Outback)	DOOR	Approximately 20 minutes later

NOTE

- **The default setting for this function is set as "operational". The operational/non-operational setting of this function can be changed by a SUBARU dealer. Contact your SUBARU dealer to change the setting.**
- **When leaving the vehicle, please make sure that all doors and the rear gate (Outback) are completely closed.**
- **The battery drainage prevention function does not operate under the following condition.**
  - **– While the push-button ignition switch is in "ACC" or "ON" (models with the push-button ignition switch)**
  - **– While the key is in the ignition switch (models without the push-button ignition switch)**
- **Models with the push-button ignition switch are also equipped with the battery drainage prevention function for the push-button ignition switch. For details, refer to "Battery drainage prevention function" ☞P170.**

2-6. Alarm System

The alarm system helps to protect your vehicle and valuables from theft. The horn sounds and the hazard warning flashers flash if someone attempts to break into your vehicle.

For models with “keyless access with push-button start system”:

The system can be armed or disarmed with the keyless access function or access key fob.

The system will not be activated when the push-button ignition switch is in the “ACC” or “ON” position.

For models without “keyless access with push-button start system”:

The system can be armed or disarmed with the remote transmitter.

The system will not be activated when the key is inserted into the ignition switch.

Your vehicle’s alarm system has been set for activation at the time of shipment from the factory. You can set the system for deactivation yourself or have it done by your SUBARU dealer.

■ Alarm System Operation

When the alarm system is armed, it is triggered by the opening any of the doors, the rear gate (Outback)/trunk lid (Legacy) or engine hood.

The alarm system will activate the following alarms when triggered.

- The vehicle’s horn will sound for 30 seconds.
- The hazard warning flashers will flash for 30 seconds.

If any of the doors, the rear gate (Outback)/trunk lid (Legacy) or engine hood remains open after the 30-second period, the horn will continue to sound for a maximum of 3 minutes. If the door, rear gate (Outback)/trunk lid (Legacy) or engine hood is closed while the horn is sounding, the horn will stop sounding with a delay of up to 30 seconds.

NOTE

The alarm system can be set to trigger the illumination of the following interior lights.

- **Map lights (illuminates only when the door interlock switch is in the “DOOR” position)**
- **Dome light (illuminates only when the dome light switch is in the “DOOR” position)**
- **Cargo area light (Outback) (illuminates only when the cargo area light switch is in the “DOOR” position)**

The notifications regarding the map lights, dome light and cargo area light (Outback) are deactivated as the factory setting. A SUBARU dealer can activate the system. Contact your SUBARU dealer for details.

■ Arming the System

The alarm system becomes armed when the following operation is performed.

1. Close all windows and the moonroof (if equipped) and turn the ignition switch to the “OFF” position.
2. Carry the key and get out of the vehicle.
3. Make sure that the engine hood is locked.
4. Lock the doors using any of the following methods.
   - Locking using the remote keyless entry system. For details, refer to “Remote Keyless Entry System” ☞P132.
   - Locking using the keyless access function (if equipped). For details, refer to “Locking with the door lock sensor” ☞P120.

- Locking using the power door locking switch. For details, refer to "Locking using power door locking switch" ☞P137.
- Locking using the rear lock button. For details, refer to "Locking with the rear lock button (Outback)" ☞P120.
- Locking using the power rear gate lock button. For details, refer to "Locking with the power rear gate lock button (Outback – if equipped)" ☞P120.

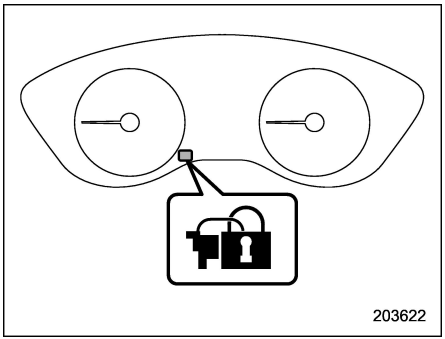

Security indicator light

NOTE

• All doors, the rear gate (Outback)/trunk lid (Legacy) and fuel filler lid will lock, an electronic chirp will sound once, the hazard warning flashers will flash once, and the security indicator light will start flashing rapidly.

• If any of the doors or the rear gate (Outback)/trunk lid (Legacy) is not fully closed, an electronic chirp sounds five times and the hazard warning flashers flash five times to alert you that the doors (or the rear gate (Outback)/trunk lid (Legacy)) are not properly closed. When you close the door, doors will automatically lock and the system will automatically arm in 30 seconds.

5. Approximately 30 seconds later, the system will enter surveillance state.

When the system is in surveillance state, the security indicator light will then flash slowly (twice approximately every 2 seconds), indicating that the system has been armed for surveillance.

NOTE

• The system can be armed even if the windows and/or moonroof are open. Always make sure that they are fully closed before arming the system.

• The 30-second standby time can be eliminated if you prefer. Have it performed by your SUBARU dealer.

• If any of the following actions is done during the standby period, the system will not switch to the surveillance state.

– Doors (including the rear gate (Outback)/trunk lid (Legacy)) are unlocked using the access key fob/remote transmitter.

– Doors (including the rear gate (Outback)/trunk lid (Legacy)) are unlocked using the keyless access function (models with "keyless access with push-button start system").

– Any door (including the rear gate (Outback) and engine hood) is opened.

– The ignition switch is turned to the "ON" position (models without "keyless access with push-button start system").

– Push-button ignition switch is turned to the "ACC" position (models with "keyless access with push-button start system").

■ Disarming the System

Perform either of the following procedures.

- Briefly press a button (for less than 2 seconds) on the access key fob/remote transmitter.
- Carry the access key fob and perform either of the following procedures (models with "keyless access with push-button start system").
  – Grip the front door handle.

– CONTINUED –

– Press the rear gate opener button (Outback).
– Press the trunk opener button (Legacy).
– Unlock using the PIN code access.

The flashing of the security indicator light will then change slowly (once approximately every 3 seconds from twice approximately every 2 seconds), indicating that the alarm system has been disarmed.

▼ Emergency disarming

If you cannot disarm the system using the access key fob/transmitter (i.e., the transmitter is lost, broken or the transmitter battery is too weak), you can disarm the system without using the access key fob/remote transmitter.

The system can be disarmed if you turn the ignition switch from the "LOCK"/"OFF" position to the "ON" position with a registered key/access key fob.

NOTE

For models with "keyless access with push-button start system", if the access key fob battery is discharged, perform the procedure described in "Switching Power Status" ☞P457. In such a case, replace the battery immediately. Refer to "Replacing Battery of Access Key Fob" ☞P515.

■ Alarm System Setting

To change the setting of your vehicle's alarm system for activation or deactivation, do the following.

1. Disarm the alarm system. Refer to "Disarming the System" ☞P141.
2. Sit in the driver's seat and shut all doors, the rear gate (Outback), the trunk lid (Legacy) and engine hood.
3. Turn the ignition switch to the "ON" position.
4. Hold down "🔒" of the driver's power door locking switch, open the driver's door within the following 1 second, and wait 10 seconds without releasing the switch. The setting will then be changed as follows.

Setting status	Combination meter display (color LCD)	Horn
Activate	AL ON	Once
Deactivate	AL OFF	Twice

NOTE

You may have the above setting change done by your SUBARU dealer.

■ If You Have Accidentally Triggered the Alarm System

▼ To stop the alarm

Do any of the following operations:

- Press any button on the access key fob/remote transmitter.
- Turn the ignition switch to the "ON" position (models without "keyless access with push-button start system").
- Turn the push-button ignition to the "ACC" position (models with "keyless access with push-button start system").

NOTE

Only registered keys will stop the alarm. If the immobilizer transponder is not registered, the alarm will not stop.

■ Valet Mode

When you choose the valet mode, the alarm system does not operate. In valet mode, the remote transmitter is used only for locking and unlocking the doors and rear gate (Outback) and panic activation.

To enter the valet mode, change the setting of your vehicle's alarm system to deactivation mode. Refer to "Alarm System Setting" ☞P142. The security indicator light will continue to flash once every 3

seconds, indicating that the system is in the valet mode.

To exit valet mode, change the setting of your vehicle's alarm system to activation mode. Refer to "Alarm System Setting" ☞P142.

2-7. Child Safety Locks

WARNING

Always turn the child safety locks to the "LOCK" position when children sit on the rear seat. Serious injury could result if a child accidentally opens the door and falls out.

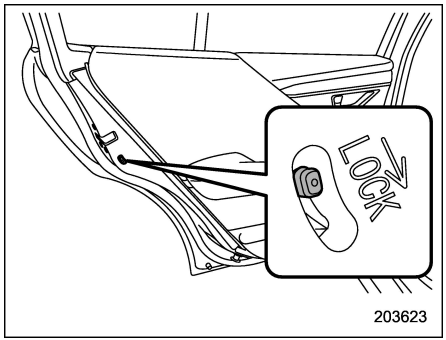

Each rear door has a child safety lock. When the child safety lock lever is in the "LOCK" position, the door cannot be opened from inside. The door can only be opened from the outside.

2-8. Windows

WARNING

To avoid serious personal injury caused by entrapment, always conform to the following instructions without exception.

- **When operating the power windows, be extremely careful to prevent anyone's fingers, arms, neck, head or other objects from being caught in the window.**
- **Always lock the passengers' windows using the lock switch when children are riding in the vehicle.**
- **Always carry the key when you leave the vehicle for safety reasons and never allow an unattended child to remain in the vehicle. Failure to follow this procedure could result in injury to a child operating the power window.**

The power windows operate when the ignition switch is in the "ON" position.

NOTE

- **If the power window system detects resistance, an impact or abnormality,**

– CONTINUED –

the window operation may be automatically stopped to prevent further jamming, entrapment or malfunction.

– The closing window slides down slightly and stops.

– The opening window stops sliding down.

● The power window system may detect resistance, an impact or an abnormality in the following cases.

– A substantial sized object is caught between the window and the window frame.

– A foreign object is caught between the window and the window frame.

– The vehicle drives over a deep pothole.

● The window cannot be closed for a few seconds after the window is automatically stopped by the system.

■ Power Window Operation

▼ Power window switches

● Driver's side power window switches:

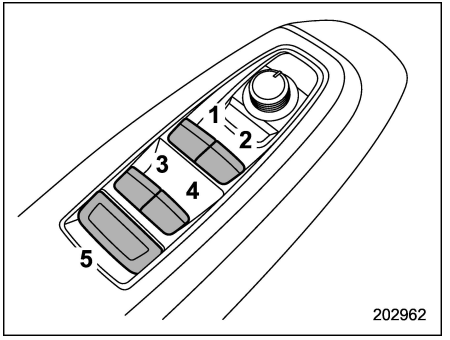

1) For front left window (with one-touch auto up and down feature)
2) For front right window (with one-touch auto up and down feature)
3) For rear left window (with one-touch auto up and down feature (if equipped))
4) For rear right window (with one-touch auto up and down feature (if equipped))
5) Lock switch

All door windows can be controlled by the power window switch cluster on the driver side door.

The switch illuminates when operated.

● Passenger's side power window switches:

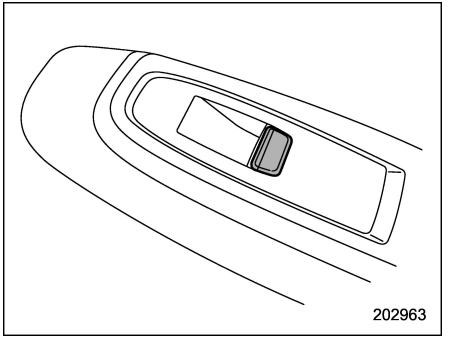

Each passenger's window can be controlled by the power window switch located on the door.

The switch illuminates when operated.

▼ Operating the window

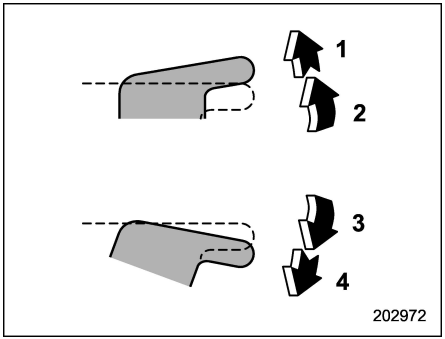

With one-touch auto up and down feature

1) Automatically close*
2) Close
3) Open
4) Automatically open*

*: To stop the window halfway, operate the switch to the opposite side.

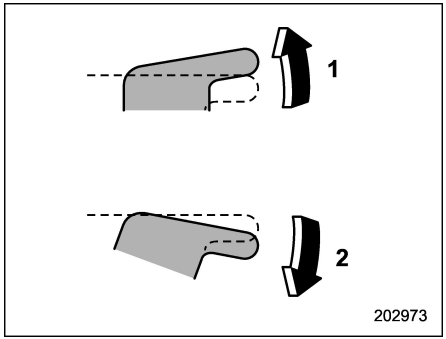

Without one-touch auto up and down feature

1) Close
2) Open

NOTE

Avoid the following.

- **Continuously operating a switch in the same direction after the window is fully closed or fully opened.**
- **Continuously operating three or more switches all at once in the same direction after the windows are fully closed or fully opened.**

Either of the operations described above may cause the power window breaker to operate making it impossible to open or close the window. Be sure to initialize the power windows. Refer to "Initialization of Power Window (Windows with One-Touch Auto up and down Function)" ☞P146.

▼ Anti-entrapment function (windows with one-touch auto up and down function)

While closing the window automatically, if the window senses a substantial enough object trapped between the window and the window frame, it automatically moves down slightly and stops.

If a foreign object is caught while window is opening automatically, the window will stop.

⚠ CAUTION

- **Never attempt to test the power window operation using body parts fingers, hands or other parts of your body.**
- **If an object is caught just before the window fully closes, the system may not operate properly.**

NOTE

- **If a window detects an impact similar to that caused by trapping an object (for example, when the vehicle encounters a deep pothole), the anti-entrapment function may operate.**

– CONTINUED –

- **You cannot close the window for a few seconds after the anti-entrapment function operates.**

▼ **Off delay function (windows with one-touch auto up and down function)**

The windows can be operated for approximately 40 seconds even after the ignition switch is turned to the “ACC” or “OFF” position. If a front door is opened within 40 seconds, the off delay function is canceled.

▼ **Locking the passengers’ windows**

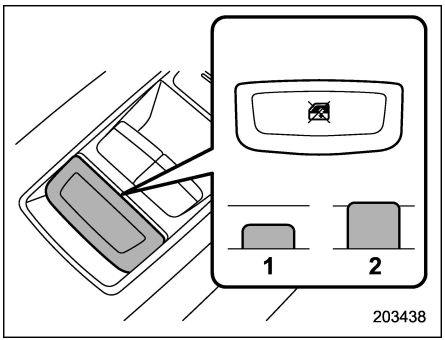

1) Lock
2) Unlock

When the lock switch is in the lock position, the rear passenger’s window switches on the driver side door and the passengers’ window switches cannot be operated.

When the indicator on the window switches does not illuminate, the window switch cannot be operated.

■ Initialization of Power Window (Windows with One-Touch Auto up and down Function)

If the one-touch auto up and down function or off delay function does not operate properly, operate each window according to the following procedure in order to initialize the power window system.

1. Close the door.
2. Turn the ignition switch to the “ON” position.
3. Open the window completely and then press and hold down the power window switch for approximately 1 second.
4. Close the window completely and then pull and hold the power window switch for approximately 1 second.

2-9. Trunk Lid (Legacy)

⚠ WARNING

- **To prevent dangerous exhaust gas from entering the vehicle, always keep the trunk lid closed while the engine is running.**
- **Help prevent children, adults or animals from locking themselves in the trunk. On hot or sunny days, the temperature in the trunk could quickly become high enough to cause death or serious heat-related injuries including brain damage to anyone locked inside, particularly for small children.**
- **When leaving the vehicle, close all windows and lock all doors. Also make certain that the trunk is closed.**

■ To Open and Close the Trunk Lid from Outside

The trunk lid can be opened using the keyless access function or remote keyless entry system. For details, refer to the following section.

- For models with “keyless access with

push-button start system", refer to "Opening trunk (Legacy)" ☞P121, or "Opening the Trunk Lid (Legacy)" ☞P133.

- For models without "keyless access with push-button start system", refer to "Opening the Trunk Lid (Legacy)" ☞P133.

To close the trunk lid, lightly press the trunk lid down until the latch engages.

NOTE

- **Do not leave your valuables in the trunk when you leave your vehicle.**
- **Under the following conditions, the trunk can be opened without the access key fob.**
  - **The trunk lock/unlock setting is set to on.**
  - **All doors are unlocked.**

The trunk lock/unlock setting can be changed by a SUBARU dealer. Contact your SUBARU dealer to change the setting.

■ To Open the Trunk Lid from Inside

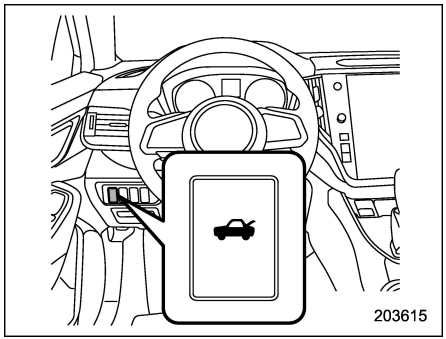

Press and hold the trunk lid opener button for more than 1 second.

■ Internal Trunk Lid Release Handle

The internal trunk lid release handle is a device designed to open the trunk lid from inside the trunk. In the event children or adults become locked inside the trunk, the handle allows them to open the lid. The handle is located on the inside of the trunk lid.

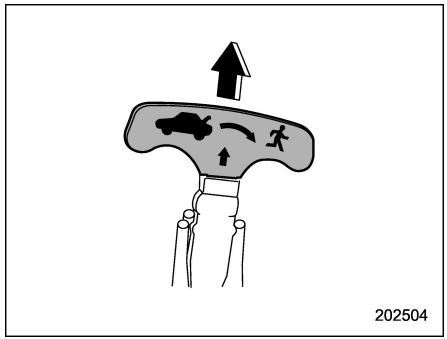

To open the trunk lid from inside the trunk, pull the yellow handle as indicated by the arrow on the handle. This operation unlocks the trunk lid. Then, push up the lid.

The handle is made of material that remains luminescent for approximately an hour in the dark trunk space after it is exposed to ambient light even for a short time.

– CONTINUED –

WARNING

Never allow any child to get in the trunk and play with the release handle. If the driver starts the vehicle without knowing that a child is inside the trunk and the child opens the lid using the release handle, the child could fall out and be killed or seriously injured.

CAUTION

- **Do not close the lid while gripping the release handle. The handle may be damaged.**
- **Do not use the handle as a hook to fasten straps or ropes to secure your cargo in the trunk. Such use may result in damage of the handle.**
- **Load the trunk so that cargo cannot strike the release handle. If the cargo hits the handle while the vehicle is being driven, the handle may be pulled and the trunk lid may open. That may cause cargo to fall out of the trunk, which could create a traffic safety hazard.**

▼ Inspection

Perform the following steps at least twice a year to check the release handle for correct operation.

1. Open the trunk lid.

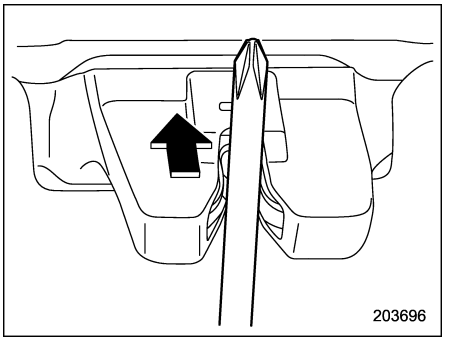

2. To lock it, press the latch with the screwdriver shaft until it clicks.

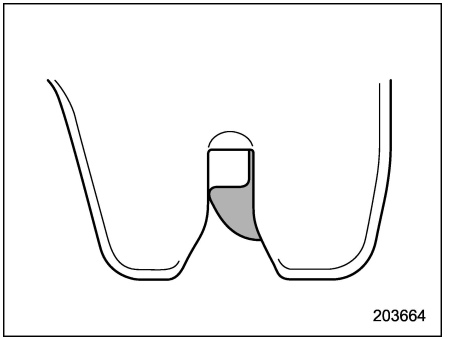

This places the latch in the locked position.

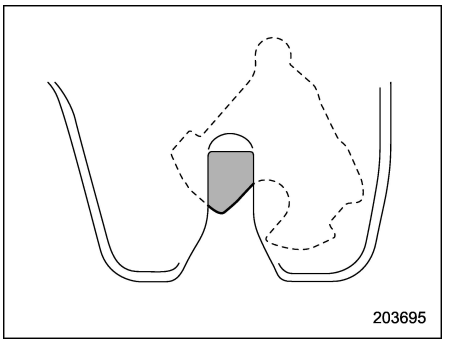

3. Move the release handle, from outside the vehicle, in the direction of the arrow to check if the latch is released.

If the latch is not released, contact your SUBARU dealer.

In that case, use the key to release the latch, then close the trunk lid.

Also, if the movement of the release handle feels restricted or not entirely smooth during operation, or the handle and/or handle base is cracked, contact your SUBARU dealer.

2-10. Rear Gate (Outback)

■ Manual Rear Gate

The rear gate can be locked and unlocked using any of the following systems.

- Power door locking switch: Refer to “Locking and Unlocking from the Inside” ☞P137.
- Keyless access with the push-button start system (if equipped): Refer to “Keyless Access with Push-Button Start System” ☞P113.
- Remote keyless entry system: Refer to “Remote Keyless Entry System” ☞P132.

To open:

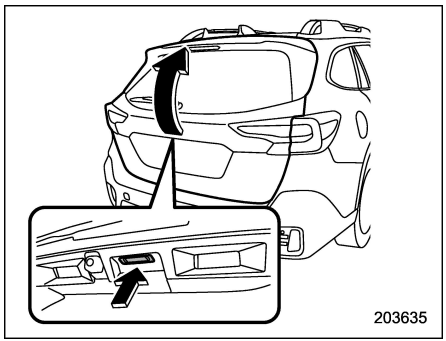

Rear gate opener button

1. Unlock the rear gate.
2. Press and hold the rear gate opener button. The rear gate will open slightly.
3. Hold the rear gate and lift it up slowly.

NOTE

If the rear gate cannot be opened due to a discharged vehicle battery, a malfunction in the door locking/unlocking system or other causes, you can unlock it by manually operating the rear gate lock release lever. For the procedure, refer to “Rear Gate (Outback) – If the Rear Gate Cannot Be Opened” ☞P458.

To close:

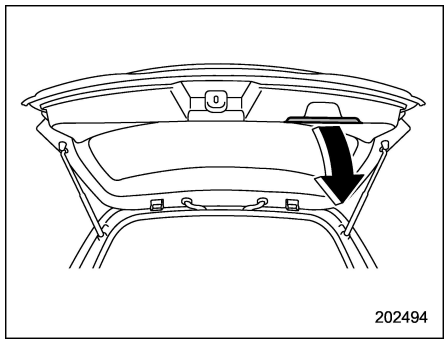

Lower the rear gate slowly and push down firmly until the latch engages.

The rear gate can be lowered easily if you pull it down holding the convenient grip.

– CONTINUED –

WARNING

- To prevent dangerous exhaust gas from entering the vehicle, always keep the rear gate closed while the engine is running.
- Do not attempt to shut the rear gate while holding the recessed grip. Also do not close the rear gate by pulling the grip from inside the cargo space. There is a danger of your hand being caught and injured.

CAUTION

- Do not jam a plastic bag in or place cellophane tape on the rear gate stays or scratch the stays while loading or unloading cargo. That could cause leakage of gas from the stays, which may result in their inability to hold the rear gate open.
- Be careful not to hit your head or face on the rear gate when opening or closing the rear gate and when loading or unloading cargo.

Power Rear Gate (If Equipped)

WARNING

- When operating the power rear gate, observe the following precautions. Ignoring the precautions may result in an injury (e. g., anyone's body is hit against the rear gate or is caught in the rear gate, etc.)
  - Make sure there are no people around the rear gate.
  - Never let anyone get close to the rear gate.
- When closing the rear gate, be extremely careful to prevent anyone's fingers, arms, neck, head or other objects from being caught in the rear gate. Otherwise, serious personal injury may be caused by entrapment.
- After opening the rear gate on a slope by using the power rear gate feature, the rear gate may close. Make sure that the rear gate has stopped completely after opening it.
- When leaving the vehicle, always carry the key for safety and never allow an unattended child to remain in the vehicle. Failure to follow this procedure could result in injury to a child operating the power rear gate.
- The driver should be aware of and pay careful attention to his/her responsibilities.
- Use the power rear gate only when the area around the rear gate is clearly visible and when you have checked that there is no danger of people being caught in the gate.

CAUTION

- When closing the rear gate after opening it, make sure to use the power rear gate. If you close the rear gate manually with extra force, the power rear gate may be damaged.
- Do not install any accessories other than genuine SUBARU parts on the rear gate. If the weight of rear gate increases excessively, the rear gate stay cannot support the rear gate sufficiently when opening the rear gate. Also, the power rear

gate may not function properly or may malfunction.

The power rear gate operates only when all of the following conditions are satisfied.

- The vehicle is stopped completely.
- The outside temperature is within a range from −22°F to 140°F (from −30°C to 60°C).
- The ignition switch is in the “OFF” or “ACC” position. Or, the ignition switch is in the “ON” position and the select lever is in the “P” position.

We recommend using the power rear gate function in most circumstances instead of manual operation.

NOTE

- **The rear gate may not move smoothly when the battery power becomes low.**
- **Do not press the power rear gate button repeatedly while the power rear gate is operating. Otherwise, the system may ignore the button operation in order to avoid being damaged.**
- **If the vehicle starts to move while the power rear gate is operating, the system sounds a buzzer and closes the rear gate automatically. At this time, if the system detects jamming, it will deactivate the power rear gate and the rear gate will not be closed. If this occurs, close the rear gate manually. For details, refer to “Manual Rear Gate” ☞P149.**
- **If you try to open the rear gate using the power rear gate function immediately after closing the rear gate using the power rear gate function, an electronic chirp will sound and the rear gate will not open. Wait for a while before trying to open the rear gate via the power rear gate function.**
- **If either of the operating conditions has not been satisfied while operating the power rear gate, an electronic chirp will sound and the power rear gate will be deactivated. In this case, the rear gate may stop opening or closing suddenly.**

▼ Operation

NOTE

- **The rear gate will remain unlocked even after closing it. Always lock the rear gate when leaving the vehicle.**
- **If you cannot open/close the rear gate by performing the operation described here, a short electronic chirp will sound three times (beep, beep, beep). In this case, perform the initialization of the power rear gate. Refer to “Initialization of power rear gate” ☞P156.**

▽ By the power rear gate button (other than the buttons on the rear gate)

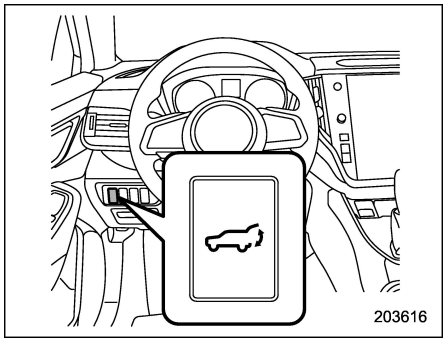

Power rear gate button on the instrument panel

– CONTINUED –

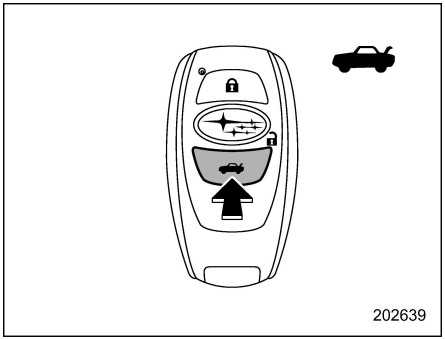

Power rear gate button on the access key fob

To open the rear gate:

Press and hold the power rear gate button when the rear gate is closed. The rear gate will open automatically. Then an electronic chirp and the hazard warning flashers will operate as follows:

- When operating the power rear gate button on the instrument panel: sounds and flashes twice.
- When operating the power rear gate button on the access key fob: sounds and flashes four times.

NOTE

- **While the rear gate is locked, you cannot open the rear gate by operating the power rear gate button on the instrument panel. In such a case, unlock the rear gate before operating the power rear gate button.**
- **You can change the operation settings for the "" button on the access key fob. Contact your SUBARU dealer to change the setting.**

To pause the opening rear gate:

Briefly press the power rear gate button while the rear gate is being opened. Then an electronic chirp will sound twice and the hazard warning flashers will flash twice.

If you press the power rear gate button again, the rear gate will close.

You can open the rear gate by pressing the power rear gate button briefly while the rear gate is being closed.

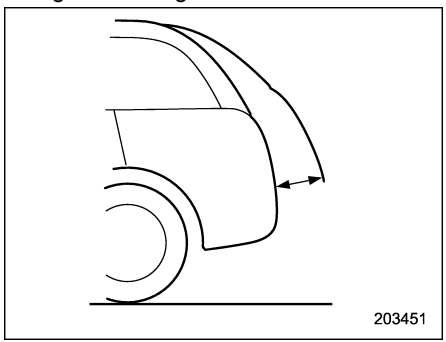

NOTE

The rear gate cannot be paused when it is in the approximately 2 in (5 cm) range from the fully closed position. The system will ignore any button operation and the rear gate will continue to open.

To close the rear gate:

Press and hold the power rear gate button. Then an electronic chirp will sound twice and the hazard warning flashers will flash twice. If you briefly press the power rear gate button again, the rear gate will open.

▽ By the buttons on the rear gate

NOTE

After performing the following procedures, an electronic chirp will sound twice and the hazard warning flashers will flash twice.

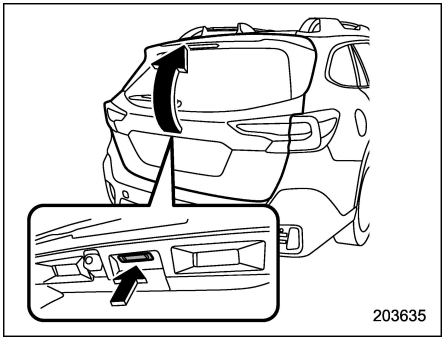

Rear gate opener button

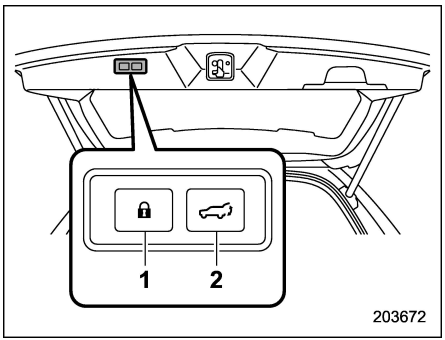

Power rear gate button on the inside edge of the rear gate

1) Power rear gate lock button
2) Power rear gate button

To open the rear gate:

1. For models with “keyless access with push-button start system”, carry the access key fob. For models without “keyless access with push-button start system”, unlock the rear gate.
2. Briefly press the rear gate opener button when the rear gate is closed.

The rear gate will open automatically.

To pause the opening rear gate:

Briefly press either of the following buttons while the rear gate is being opened.

- Rear gate opener button
- Power rear gate button on the inside edge of the rear gate

If you press the power rear gate button again, the rear gate will close. You can open the rear gate by pressing the power rear gate button briefly while the rear gate is being closed.

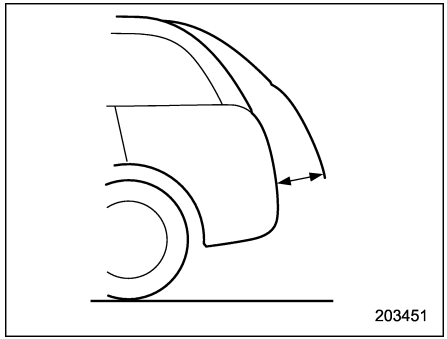

NOTE

The rear gate cannot be paused when it is in the approximately 2 in (5 cm) range from the fully closed position. The system will ignore any button operation and the rear gate will continue to open.

To close the rear gate:

Briefly press either of the following buttons.

- Rear gate opener button
- Power rear gate button on the inside edge of the rear gate

If you press the power rear gate button again, the rear gate will open.

– CONTINUED –

To Lock the doors using the power rear gate lock button:

Carry the access key fob, and press the power rear gate lock button. All doors, the rear gate and the fuel filler lid are locked, and the rear gate will be closed. Also, the hazard warning flashers will flash once, and an electronic chirp will sound once.

NOTE

- **By pushing the power rear gate lock button for more than 2 seconds, all doors are locked, however, the auto closing function of the rear gate will be canceled.**
- **If any of the doors is not fully closed, the electronic chirp sounds five times to alert you that the doors are not properly closed.**

▽ By manual operation

To open the rear gate:

Lift up the rear gate, when the rear gate is at the midway position. The rear gate will open automatically.

To close the rear gate:

Pull down the rear gate when the rear gate is opened. The rear gate will close automatically.

NOTE

- **If the rear gate is moved slowly, it may not operate automatically open or close.**
- **When leaving the vehicle, make sure that all doors and the rear gate are completely locked.**

▼ Manual operation

The power rear gate can be closed manually. Refer to “By manual operation” ☞P154.

NOTE

Using the power rear gate operation is recommended. Manual operation will require physical effort.

▼ Memory function

The preferred rear gate height can be registered.

▽ Registration of the rear gate height

To register the rear gate height, perform the following procedures.

1. Open the rear gate and stop it at the preferable height.

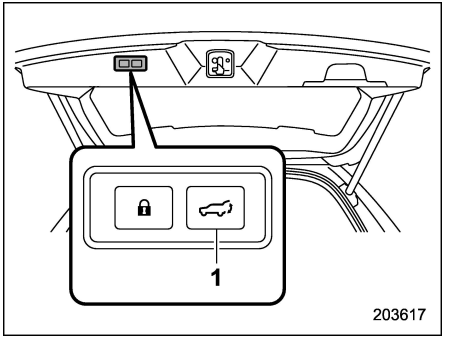

1) Power rear gate button

2. Press and hold the power rear gate button to register the height. An electronic chirp sounds and the hazard warning flashes for confirmation.

The rear gate will stop at the registered position when the memory function is on.

NOTE

- **Register the rear gate height to turn on the “Power Rear Gate Memory” automatically. For details, refer to “Car settings” ☞P215.**
- **To change the registered height, perform the registering procedure again.**
- **It is possible to register the height from approximately 2 in (5 cm) or more**

from the completely closed position.

▽ **Deactivation of the memory function**

Deactivate the memory function to open the rear gate fully. Perform either of the following operation to deactivate the memory function.

– Deactivate the "Power Rear Gate Memory" function on the center information display (CID). Refer to "Car settings" ☞P215.

– Register the position of the rear gate at the fully open position.

▽ **Utilizing the memorized rear gate height**

To open the rear gate and stop it at the registered height, perform the following procedure.

1. Check that "Power Rear Gate Memory" is on. Refer to "Car settings" ☞P215.
2. Press and hold any of the power rear gate button.

NOTE

The rear gate will open to the position that is stored in the memory function even if the rear gate is opened by the reverse function.

▼ **Reverse function**

WARNING

- **Do not let parts of your body get caught when operating the reverse function. If the reverse function does not operate for some reason, this may lead to serious injury or accidents.**
- **The reverse function may not operate if foreign objects are caught in the rear gate just before it closes completely. Be careful not to catch your fingers and other body parts.**
- **The reverse function may not operate depending on the object shape and the manner in which it was caught. Be careful not to catch your fingers and other body parts.**

CAUTION

- **If the reverse function is operated 3 times consecutively, automatic opening and closing of the power rear gate function will be canceled and the rear gate will stop opening or closing suddenly. However, the rear gate may open or close depending on the rear gate height when automatic operation is ceased. Be careful that the rear gate does not hit anyone's head or face, etc. and that fingers and baggage, etc. are not caught in it.**
- **Take care not to damage the touch sensors. Otherwise, the reverse function may cease to operate.**

If, while opening or closing using power rear gate, the rear gate catches persons or baggage or hits an obstacle, an electronic chirp will sound 3 times and the rear gate will operate as follows.

When opening the rear gate: The rear gate will automatically close.

When closing the rear gate: The rear gate will automatically open.

– CONTINUED –

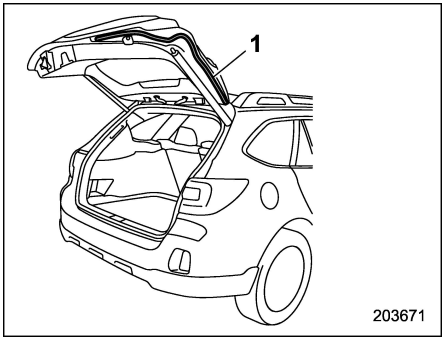

1) Touch sensor

Touch sensors are attached on the left and right edges of the rear gate. If the touch sensors detect fingers, baggage, etc. while closing by the power rear gate function, an electronic chirp will sounds 3 times and the rear gate will open automatically.

NOTE

When the rear gate is opened using the reverse function, it will be opened fully or to the height registered in the memory function.

▼ Rear gate drop prevention function

If, while fully opened via the power rear gate function, the rear gate is lowered by the weight of snow and such, an electronic chirp will sound and the rear gate drop prevention function will apply braking to the rear gate so that it prevents a rapid closure of the rear gate.

NOTE

- **If there is snow on the rear gate, only use the power rear gate function after removing the snow.**
- **If you close the rear gate manually just after the rear gate is fully opened using the power rear gate function, the rear gate drop prevention function will detect a rapid closure of the rear gate and apply braking to the rear gate. In this case, this is not a malfunction.**

▼ Selecting audible signal operation

Using an electronic chirp, the power rear gate will give you an audible signal before starting its operation. If desired, the audible signal can be turned off by a SUBARU dealer. Consult your SUBARU dealer for details.

For models with “keyless access with push-button start system”, you can also turn the audible signal off by operating the center information display. For details, refer to “Car settings” ☞P215.

The ON/OFF setting of the audible signal also works as the audible signal settings for the “remote keyless entry system” and the “keyless access with push-button start system”. However, for the electronic chirp such as that caused by “Reverse function” ☞P155 or “Rear gate drop prevention function” ☞P156, it cannot be set as non-operational.

▼ Initialization of power rear gate

If the power rear gate detects some abnormality while operating, an electronic chirp will sound and the power rear gate operation will be automatically stopped in either opening or closing position. In this case, the system needs to be initialized in the following order to restart the function properly.

▽ If the power rear gate is closed

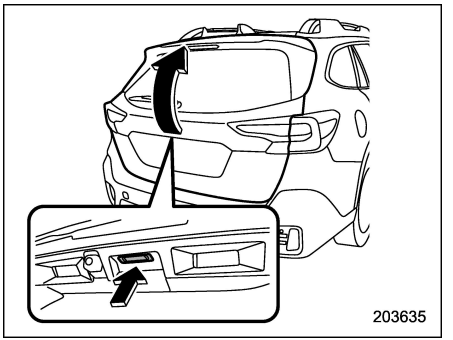

1. Keep pressing the rear gate opener button until it is unlocked.
2. Lift up the rear gate.
3. Pull down the rear gate until it starts to close automatically. The system will be initialized once the gate is fully closed.
4. Operate the power rear gate and check that the function operates properly.

▽ **If the power rear gate is opened**

1. Pull down the rear gate until it starts to close automatically. The system will be initialized once the gate is fully closed.
2. Operate the power rear gate and check that the function operates properly.

⚠ CAUTION

If the power rear gate function does not operate properly, have your vehicle checked by a SUBARU dealer.

▼ Hands-free Power Rear Gate function

The Hands-free Power Rear Gate function enables the rear gate to be opened automatically by holding a hand over the rear emblem.

This function can be deactivated using the Hands-free Power Rear Gate off switch. Refer to "Hands-free Power Rear Gate off switch" ☞P158.

⚠ CAUTION

Do not remove the rear emblem or decorate it or the area around it. Doing so could lead to a malfunction of the Hands-free Power Rear Gate function.

To open the rear gate via the function, perform the following steps.

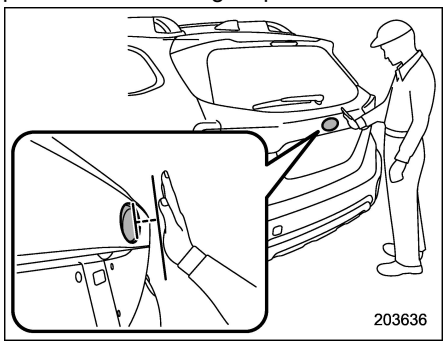

1. When the ignition switch is in the OFF position, carry the access key fob.
2. Move your hand slowly toward the rear emblem and hold it there until a electronic chirp sounds.
3. Immediately after the electronic chirp sounds, move your hand away.
4. The rear gate will open automatically.

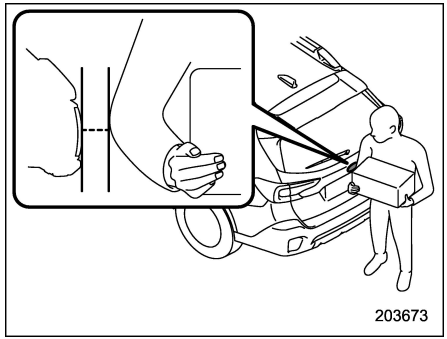

NOTE

- **It is possible to open the rear gate by moving close to the rear emblem.**
- **The Hands-free Power Rear Gate function will not operate when the rear gate has already been opened.**
- **If any of the following are performed before automatically opening the power rear gate, the operation will be canceled.**
  - **Your hand is not properly held over the rear emblem for approximately 2 seconds or more.**
  - **Touching the rear emblem**
- **The rear gate may suddenly open**

– CONTINUED –

under the following circumstances if someone is holding the access key fob near the vehicle.

– Washing the vehicle by hand and/or machine.

– There is an object rearward of the vehicle in a narrow space.

– Attaching a carrier on the back-side of the vehicle

– Attaching a trailer

– Removing snow

Take the access key fob out of the operation range or turn off the function when you do not want to activate the Hands-free Power Rear Gate function. Refer to "Hands-free Power Rear Gate off switch" ☞P158.

● The Hands-free Power Rear Gate function may not operate properly in the following conditions.

– In heavy rain

– The rear gate is very dirty.

– The vehicle is covering by snow.

– Hands and arms may not be detected because of clothing.

– The system of the vehicle cannot detect the access key fob.

In those cases, push the rear gate opener button to open.

▼ Hands-free Power Rear Gate off switch

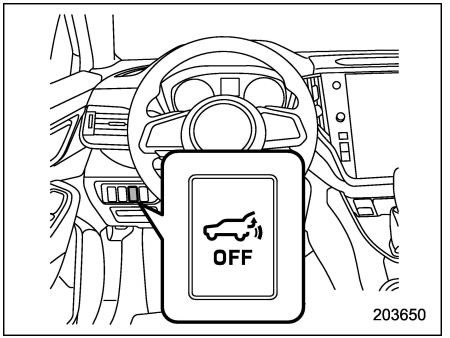

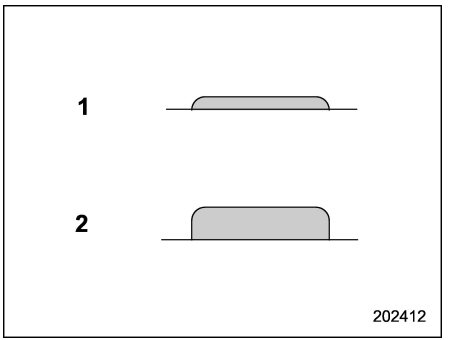

Hands-free Power Rear Gate off switch status

1) Inactive
2) Active

Pressing the Hands-free Power Rear Gate off switch deactivates the Hands-free Power Rear Gate function.

2-11. Moonroof (If Equipped)

WARNING

Never let anyone's hands, arms, head or any objects protrude from the moonroof. A person could be seriously injured if the vehicle stops suddenly or turns sharply or if the vehicle is involved in an accident.

To avoid serious personal injury caused by entrapment, you must conform to the following instructions without exception.

- **Before closing the moonroof, make sure that no one's hands, arms, head or other objects will be accidentally caught in the moonroof.**
- **Before leaving the vehicle, always remove the key from the ignition switch for safety (models without "keyless access with push-button start system") and never allow an unattended child to remain in the vehicle. Failure to follow this procedure could result in injury to a child operating the moonroof.**
- **Never try to check the anti-entrapment function by deliberately placing part of your body in the moonroof.**

CAUTION

- **Do not sit on the edge of the open moonroof.**
- **Do not operate the moonroof if falling snow or extremely cold conditions have caused it to freeze shut.**
- **The anti-entrapment function does not operate when the moonroof is being tilted down. Be sure to confirm that it is safe to do so before tilting the moonroof down.**
- **If the moonroof does not close, have the system checked by a SUBARU dealer.**

The moonroof has both tilting and sliding functions.

The moonroof operates only when the ignition switch is in the "ON" position.

■ Moonroof Switches

▼ Tilting moonroof

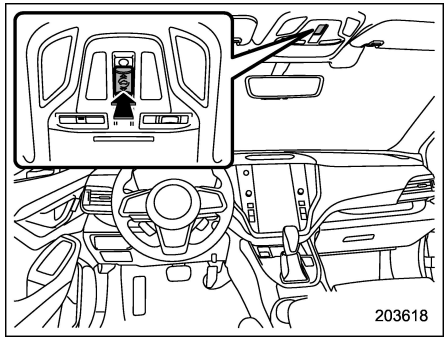

The tilting up function will only operate when the moonroof is fully closed. The laying down function will only operate when the moonroof is tilted.

To tilt up the moonroof:
Press and hold the moonroof switch.

To lay down the moonroof:
Slide and hold the moonroof switch forward.

CAUTION

Release the switch after the moonroof has been tilted or has been laid down completely. Pressing the

– CONTINUED –

switch continuously may cause damage to the moonroof.

NOTE

One-touch operation does not take place when the moonroof is lowered. Press the switch continuously to lower the moonroof.

▼ Sliding moonroof

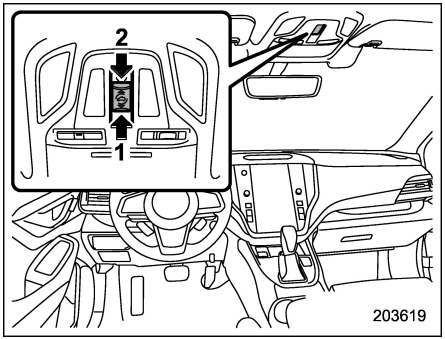

1) Open
2) Close

To open the moonroof:

When the moonroof switch is slid and held backward, the moonroof will open, then stop slightly before the fully open position to reduce wind noise.

Slide the moonroof switch again to fully open the moonroof.

To close the moonroof:

When the moonroof switch is slid and held to the close side, the moonroof will fully close.

To stop the moonroof halfway, slide the moonroof switch either way.

After washing the vehicle or after it rains, wipe away water on the roof prior to opening the moonroof to prevent drops of water from falling into the passenger compartment.

NOTE

For the sake of safety, it is recommended that you avoid driving with the moonroof fully opened.

▼ Anti-entrapment function

When the moonroof senses a substantial enough object trapped between its glass and the vehicle's roof during closure, it automatically moves to the open side and stop. The anti-entrapment function may also be activated by a strong shock on the moonroof even when there is nothing trapped.

⚠ CAUTION

Never attempt to test this function using fingers, hands or other parts of your body.

■ Sun Shade

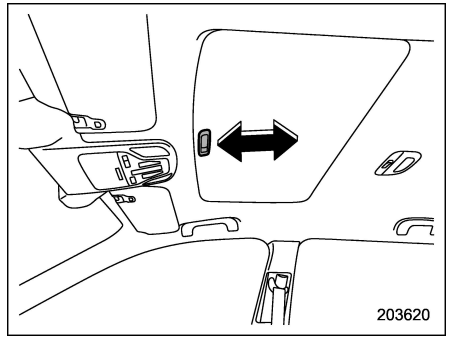

The sun shade can be slid forward or backward by hand while the moonroof is closed.

If the moonroof is opened, the sun shade also moves back.

3-1. Ignition Switch (Models without Push-Button Start System) 166
Key Positions 166
Key Reminder Chime 167
Ignition Switch Light 167
3-2. Push-Button Ignition Switch (Models with Push-Button Start System) 168
Safety Precautions 168
Operating Range for Push-Button Start System ... 168
Switching Power Status 169
When Access Key Fob Does Not Operate Properly 170
3-3. Hazard Warning Flasher 170
3-4. Meters and Gauges 171
Speedometer 171
Tachometer 171
Odometer 171
Double Trip Meter 172
Fuel Gauge 172
Engine Coolant Temperature Gauge 173
Combination Meter Settings 173
3-5. Illumination Brightness Control 173
Auto Dimmer Cancel Function 174
3-6. Warning and Indicator Lights 175
Seatbelt Warning Light and Chime 175
SRS Airbag System Warning Light 177
Front Passenger's Frontal Airbag ON and OFF Indicators 177
CHECK ENGINE Warning Light/Malfunction Indicator Light 178
Charge Warning Light 179
Oil Pressure Warning Light 179
Engine Low Oil Level Warning Indicator 179
AT OIL TEMP Warning Light 180
Low Tire Pressure Warning Light (U.S. Spec. Models) 180
ABS Warning Light 181
Brake System Warning Light 182
Electronic Parking Brake Indicator Light 183
Auto Vehicle Hold ON Indicator Light 184
Auto Vehicle Hold Operation Indicator Light 185
Low Fuel Warning Light 185
Door Open Indicator 185
Engine Hood Open Warning Light 185
Windshield Washer Fluid Warning Light 185
All-Wheel Drive Warning Light 185
Power Steering Warning Light 186
Vehicle Dynamics Control Warning Light/ Vehicle Dynamics Control Operation Indicator Light 186
Vehicle Dynamics Control OFF Indicator Light 187
Warning Chimes and Warning Indicator of the Keyless Access with Push-Button Start System (If Equipped) 187
Security Indicator Light 192
SI-DRIVE Indicator Light (If Equipped) 193
Select Lever/Gear Position Indicator 193
Turn Signal Indicator Lights 193
High Beam Indicator Light 193
High Beam Assist Indicator 193

Automatic Headlight Beam Leveler Warning Light (If Equipped) 194
LED Headlight Warning Light 194
Steering Responsive Headlight OFF Indicator Light (If Equipped) 194
Steering Responsive Headlight Warning Light (If Equipped) 194
Headlight Indicator Light 194
Front Fog Light Indicator Light (If Equipped) 194
Auto Start Stop Warning Light (Yellow) 194
Auto Start Stop OFF Indicator Light 194
Auto Start Stop Indicator Light (Green) 195
Auto Start Stop No Activity Detected Indicator Light 195
X-MODE Indicator (Outback) 195
Hill Descent Control Indicator (Outback) 195
BSD/RCTA Warning Indicator (If Equipped) 195
BSD/RCTA OFF Indicator (If Equipped) 195
Icy Road Surface Warning Indicator 196
RAB Warning Indicator (If Equipped) 196
RAB OFF Indicator (If Equipped) 196
Driver Monitoring System Operation Indicator Light (Green) (If Equipped) 196
Driver Monitoring System Warning Light (Yellow) (If Equipped) 196
Driver Monitoring System OFF Indicator Light (If Equipped) 196
Driver Monitoring System Temporary Stop Indicator Light (If Equipped) 196
Sonar Audible Alarm OFF Indicator (If Equipped) 197

3-7. Combination Meter Display (Color LCD) 197
Basic Operation 198
Welcome Screen (Opening Animation) and Good-Bye (Ending Animation) Screen 198
Warning Screen 199
Meter Information Screen 199
Telltale Screen 200
Basic Screens 201
Digital Speed Screen 204
3-8. Center Information Display (CID) 205
Features 205
Welcome Screen 205
Good-Bye Screen 206
Interruption Screen 206
Touch Screen Operations 206
11.6-inch Display Models (If Equipped) 206
Dual 7.0-inch Display Models (If Equipped) 227
3-9. Clock 239
Setting the Clock Manually 239
Setting the Clock Automatically 240
3-10. Light Control Switch 241
Headlights 242
High/Low Beam Change (Dimmer) 244
Headlight Flasher 244
High Beam Assist Function 244
Daytime Running Light System 247
3-11. Steering Responsive Headlight (SRH) (If Equipped) 248

3-12. Headlight Beam Leveler (If Equipped) 249
3-13. Front Fog Light Switch (If Equipped)..... 249
3-14. Turn Signal Lever 250
One-Touch Lane Changer 250
3-15. Wiper and Washer 251
Windshield Wiper and Washer Switches.....252
Rear Window Wiper and Washer Switch (Outback) 253
3-16. Defogger and Deicer..... 254
3-17. Mirrors 256
Inside Mirror (without Auto-Dimming Function) (If Equipped) 256
Auto-Dimming Mirror/Compass with HomeLink® (If Equipped) 256
Outside Mirrors 264
3-18. Tilt/Telescopic Steering Wheel 267
3-19. Heated Steering Wheel System (If Equipped) 267
3-20. Horn 268

3-1. Ignition Switch (Models without Push-Button Start System)

WARNING

- **Never turn the ignition switch to "LOCK" while the vehicle is being driven or towed because that will lock the steering wheel, preventing steering control. And when the engine is turned off, it takes a much greater effort than usual to steer.**
- **Before leaving the vehicle, always remove the key from the ignition switch for safety and never allow an unattended child to remain in the vehicle. Failure to follow this procedure could result in injury to a child or others. Children could operate the power windows, the moonroof or other controls or even make the vehicle move.**

CAUTION

Do not attach a large key holder or key case to either key. If it banged against your knees or hands while you are driving, it could turn the ignition switch from the "ON" position to the "ACC" or "LOCK" position, thereby stopping the engine. Also, if the key is attached to a keyholder or to a large bunch of other keys, centrifugal force may act on it as the vehicle moves, resulting in unwanted turning of the ignition switch.

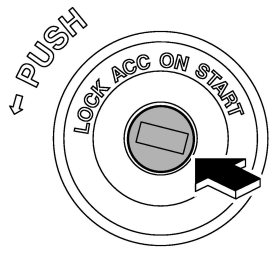

303406

The ignition switch has four positions: LOCK, ACC, ON and START.

NOTE

- **Keep the ignition switch in the "LOCK" position when the engine is not running.**
- **Using electrical accessories for a long time with the ignition switch in the "ON" or "ACC" position can cause the battery to go dead.**
- **If the ignition switch will not move from the "LOCK" position to the "ACC" position, turn the steering wheel slightly to the left and right as you turn the ignition switch.**

■ Key Positions

Position	Description
LOCK	The key can only be inserted or removed in this position. The ignition switch will lock the steering wheel when you remove the key.
ACC	In this position the electrical accessories (audio, accessory power outlet, etc.) can be used.
ON	This is the normal operating position after starting the engine.
START	The engine is started in this position.

CAUTION

Do not turn the ignition switch to the "START" position while the engine is running.

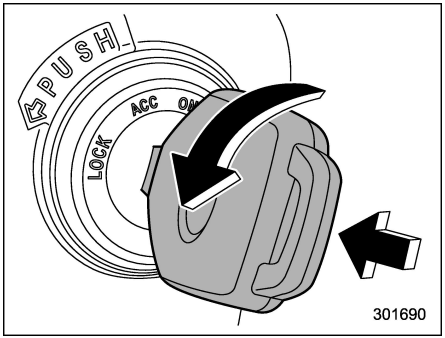

NOTE

- **To turn the key from the "ACC" to "LOCK" position, the select lever must be in the "P" position and the key must be pushed in and turned.**
- **If your registered key fails to start the engine, pull out the key once (the security indicator light will blink), and then insert the key again and turn it to the "START" position again to restart the engine.**

- **The engine may not start in the following cases:**

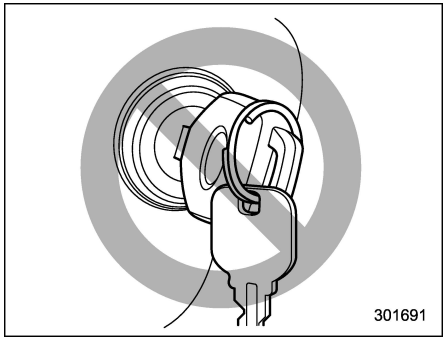

– The key grip is touching another key or a metallic key holder.

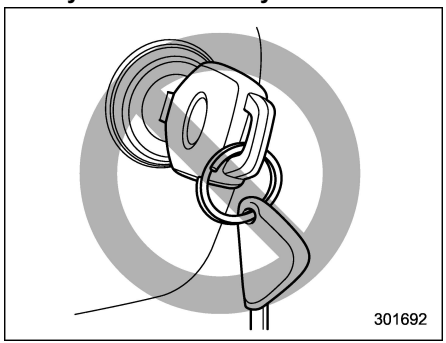

– The key is near another key that contains an immobilizer transponder.

– The key is near or touching another transmitter.

■ Key Reminder Chime

The reminder chime sounds when the driver's door is opened and the ignition switch is in the "LOCK" or "ACC" position.

The chime stops under the following conditions.

- When the ignition switch is turned to the "ON" position.
- When the key is removed from the ignition switch.
- When the driver's door is closed.

■ Ignition Switch Light

For easy access to the ignition switch in the dark, the ignition switch light illuminates when driver's door is opened or when the driver's door is unlocked using the remote keyless entry transmitter.

The light remains illuminated for approximately 30 seconds and gradually turns off under the following conditions.

- When the driver's door is closed
- When the doors are unlocked using the remote keyless entry transmitter

– CONTINUED –

The light gradually turns off under the following conditions.

- When the ignition switch is turned to the “ON” position
- When the doors are locked using the remote keyless entry transmitter

3-2. Push-Button Ignition Switch (Models with Push-Button Start System)

■ Safety Precautions

Refer to “Safety Precautions” ☞P114.

■ Operating Range for Push-Button Start System

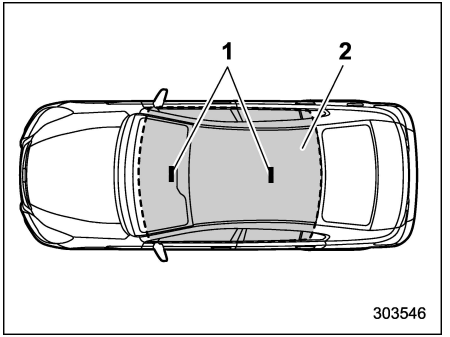

Legacy
1) Antenna
2) Operating range

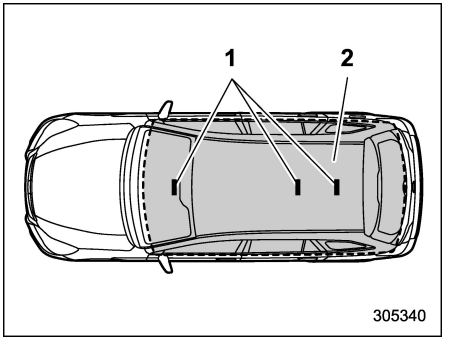

Outback
1) Antenna
2) Operating range

NOTE

- **If the access key fob is not detected within the operating range of the antennas inside the vehicle, the push-button ignition switch and the engine start cannot be operated.**
- **Even when the access key fob is outside the vehicle, if it is placed too close to the glass, it may be possible to switch the power or to start the engine.**
- **Do not leave the access key fob in the following places. It may become impossible to operate the push-button ignition switch and the engine start.**
  - **On the instrument panel**

– On the floor
– Inside the glove box
– Inside the door trim pocket
– On the rear seat
– On the rear shelf (Legacy)
– Inside the trunk (Legacy)
– At the corner of the cargo area (Outback)

- **When operating the push-button ignition switch or starting the engine, if the access key fob battery is discharged, perform the procedure described in "Access Key Fob – If Access Key Fob Does Not Operate Properly" ☞P456. In such a case, replace the battery immediately. Refer to "Replacing Battery of Access Key Fob" ☞P515.**

■ Switching Power Status

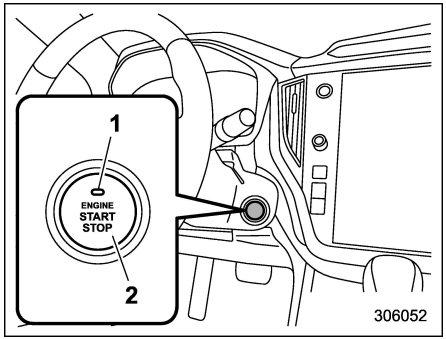

1) Operation indicator
2) Push-button ignition switch

The power status is switched every time the push-button ignition switch is pressed.

1. Carry the access key fob, and sit in the driver's seat.
2. Make sure the select lever is in the "P" position.
3. Press the push-button ignition switch without depressing the brake pedal. Every time the button is pressed, the power is switched in the sequence of "OFF", "ACC", "ON" and "OFF". When the engine is stopped and the push-button ignition switch is in "ACC" or "ON", the operation indicator on the push-button ignition switch illuminates in orange.

Power status	Indicator color	Operation
OFF	Turned off	Power is turned off.
ACC	Orange	The following systems can be used: audio and accessory power outlet.
ON	Orange (while engine is stopped)	All electrical systems can be used.
	Turned off (while engine is running)	

⚠ CAUTION

- **To prevent the vehicle battery from discharging, do not leave the push-button ignition switch in the "ON" or "ACC" position for a long time.**
- **To avoid a malfunction, observe the following precautions.**
  - **Do not spill drinks or other liquids on the push-button ignition switch.**

– CONTINUED –

- **Do not touch the push-button ignition switch with a hand that is soiled with oil or other contaminants.**

- **If the push-button ignition switch does not operate smoothly, stop the operation. Contact a SUBARU dealer immediately.**
- **If the operation indicator on the push-button ignition switch does not illuminate even when the instrument panel illumination is turned on, have the vehicle inspected at a SUBARU dealer.**
- **If the vehicle was left in the hot sun for a long time, the surface of the push-button ignition switch may get hot. Be careful not to burn yourself.**

NOTE

- **When operating the push-button ignition switch, firmly press it all the way.**
- **If the push-button ignition switch is pressed quickly, the power may not turn on or off.**
- **If the indicator light on the push-button ignition switch flashes in green when the push-button ignition switch is pressed, steering is locked. When this occurs, press the push-button ignition switch while turning the steering wheel left and right.**

▼ Battery drainage prevention function

When the push-button ignition switch is left in the “ACC” or “ON” position for approximately 1 hour, the push-button ignition switch will be automatically switched to “OFF” to prevent the battery from going dead. This function is activated when the select lever is in the “P” position.

■ When Access Key Fob Does Not Operate Properly

Refer to “Access Key Fob – If Access Key Fob Does Not Operate Properly” ☞P456.

3-3. Hazard Warning Flasher

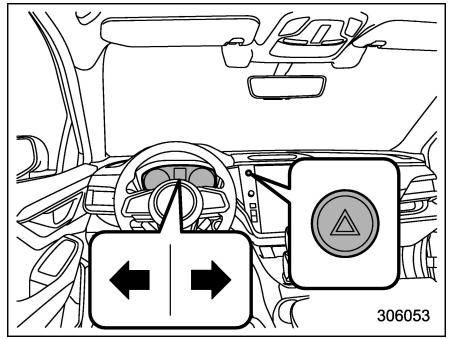

The hazard warning flasher is used to warn other drivers when you have to park your vehicle under emergency conditions. The hazard warning flasher works with the ignition switch in any position.

To turn on the hazard warning flasher, press the hazard warning button on the instrument panel. All the turn signal lights and the turn signal indicator lights will flash. To turn off the flasher, press the button again.

NOTE

When the hazard warning flasher is on, the turn signals do not work.

3-4. Meters and Gauges

NOTE

Liquid crystal displays are used in some of the meters and gauges in the combination meter. You will find their indications hard to see if you wear polarized glasses.

■ Speedometer

The speedometer shows the vehicle speed.

NOTE

The initial movement of the meter needles and gauge needles that occurs when the ignition switch is turned to the "ON" position can be activated or deactivated.

For details, refer to "General settings" ☞P211 (11.6-inch display models) or "General settings" ☞P228 (dual 7.0-inch display models).

■ Tachometer

The tachometer shows the engine speed in thousands of revolutions per minute.

⚠ CAUTION

Do not operate the engine with the pointer of the tachometer in the red zone. In this range, fuel injection will be cut by the engine control module to protect the engine from overrev-ving. The engine will resume run-ning normally after the engine speed is reduced below the red zone.

NOTE

The initial movement of the meter needles and gauge needles that occurs when the ignition switch is turned to the "ON" position can be activated or deactivated.

For details, refer to "General settings" ☞P211 (11.6-inch display models) or "General settings" ☞P228 (dual 7.0-inch display models).

■ Odometer

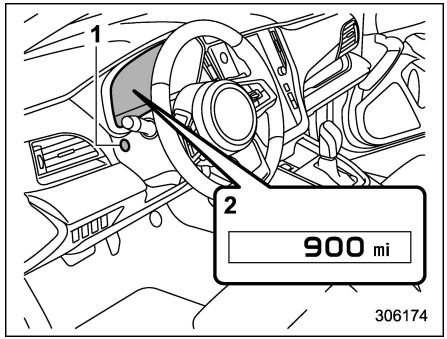

1) TRIP RESET switch
2) Odometer

This meter displays the odometer when the ignition switch is in the "ON" position.

The odometer shows the total distance that the vehicle has been driven.

NOTE

If you press the TRIP RESET switch when the ignition switch is in the "LOCK"/"OFF" or "ACC" position, the odometer/trip meter will light up. The indicators will turn off when the TRIP RESET switch is not operated for approximately 10 seconds.

– CONTINUED –

■ Double Trip Meter

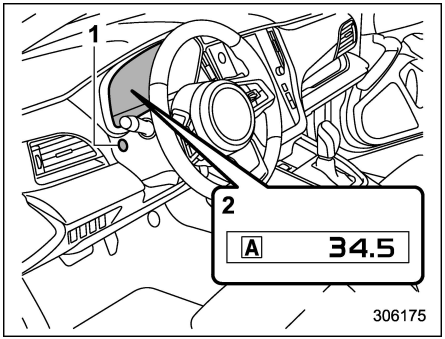

1) TRIP RESET switch
2) Trip meter

This meter displays the two trip meters when the ignition switch is in the “ON” position.

The trip meter shows the distance that the vehicle has been driven since you last set it to zero.

The display can be switched as shown in the following sequence by pressing the TRIP RESET switch.

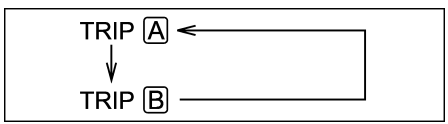

To reset the trip meter, select either the A trip or B trip meter, then press and hold the TRIP RESET switch.

⚠ CAUTION

To ensure safety, do not attempt to change the function of the indicator during driving, as an accident could result.

NOTE

- **If the connection between the combination meter and battery is broken for any reason such as vehicle maintenance or fuse replacement, the data recorded on the trip meter will be lost.**
- **If you press the TRIP RESET switch when the ignition switch is in the “LOCK”/“OFF” or “ACC” position, the odometer/trip meter will light up. It is possible to switch between the A trip meter and B trip meter indications while the odometer/trip meter is lit up.**

In addition, it is possible to reset the trip meter by pressing and holding the TRIP RESET switch.

The indicators will turn off when the TRIP RESET switch is not operated for approximately 10 seconds.

■ Fuel Gauge

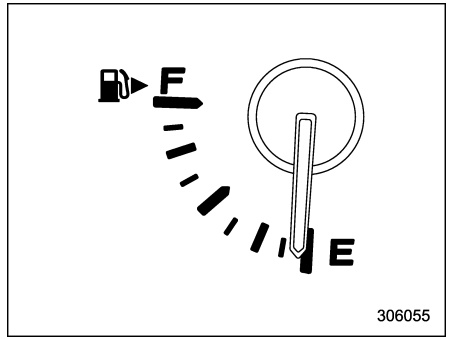

The fuel gauge shows the approximate amount of fuel remaining in the tank.

When the ignition switch is in the “LOCK”/“OFF” or “ACC” position, the fuel gauge shows “E” even if the fuel tank contains fuel.

The gauge may move slightly due to fuel level movement in the tank (e.g., during braking, turning or acceleration).

NOTE

- **You will see the “⛽▶” sign in the fuel gauge. This indicates that the fuel filler lid is located on the right side of the vehicle.**
- **If you press the TRIP RESET switch while the ignition switch is in the**

"LOCK"/"OFF" or "ACC" position, the fuel gauge will light up and indicate the amount of fuel remaining in the tank.

The gauge will turn off when the TRIP RESET switch is not operated for approximately 10 seconds.

■ Engine Coolant Temperature Gauge

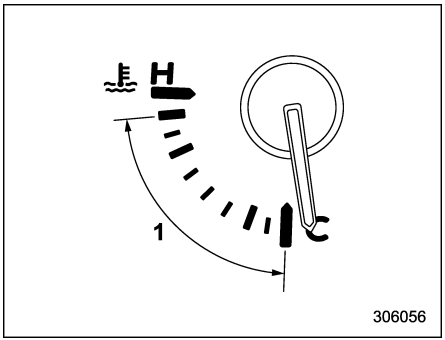

1) Normal operating range

The temperature gauge shows engine coolant temperature when the ignition switch is in the "ON" position.

The coolant temperature will vary in accordance with the outside temperature and driving conditions.

We recommend that you drive moderately until the pointer of the temperature gauge reaches near the middle of the range. Engine operation is optimum with the engine coolant at this temperature range and high revving operation when the engine is not warmed up enough should be avoided.

⚠ CAUTION

If the pointer exceeds the normal operating range, safely stop the vehicle as soon as possible.

Refer to "Engine Overheating" ☞P451.

■ Combination Meter Settings

Meter settings can be set on the center information display. For details, perform the procedures described in "General settings" ☞P211 (11.6-inch display models) or "General settings" ☞P228 (dual 7.0-inch display models).

3-5. Illumination Brightness Control

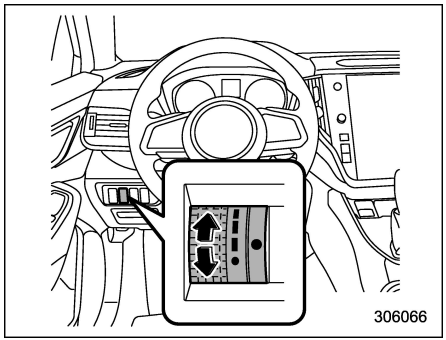

The illumination brightness of the combination meter and center information display dims under the following conditions.

- The light switch is in the "≡DOE" or "≡D" position when the ambient light is dark.
- The light switch is in the "AUTO" position and the headlights illuminate automatically.

You can adjust the illumination brightness for better visibility.

To brighten, turn the control dial upward.

To darken, turn the control dial downward.

– CONTINUED –

NOTE

- **When the control dial is turned fully upward, the illumination brightness becomes the maximum and the automatic dimming function does not work at all.**
- **The brightness setting is not canceled even when the ignition switch is turned to the "LOCK"/"OFF" position.**
- **The operation method of illumination brightness will differ depending whether or not "Brightness Dial" in the center information display is on. Refer to the operation method indicated the following table.**

"Brightness Dial" is on.

Operational item	Combination meter	Center information display
Control dial	Available	Available
"Brightness"*1 on the center information display	Not available	Not available

"Brightness Dial" is off.

Operatinal item	Combination meter	Center information display
Control dial	Available	Not available
"Brightness" on the center information display	Not available	Available

***1: When "Brightness Dial" is on, "Brightness" on the center information display is not available.**

For details about "Brightness Dial" on/off settings, refer to "General settings" ☞P211 (11.6-inch display models) or "General settings" ☞P228 (dual 7.0-inch display models).

■ Auto Dimmer Cancel Function

When the ambient light is bright, the illumination brightness is set to the maximum regardless of the position of the control dial. In this case, you cannot adjust the illumination brightness by using the control dial. When the ambient light is dark, you can dim the illumination brightness as described above.

The operational/non-operational setting and sensitivity of the auto dimmer cancel function can be changed by your SUBARU dealer. Contact your SUBARU dealer for details.

3-6. Warning and Indicator Lights

Several of the warning and indicator lights illuminate momentarily and then go out when the ignition switch is initially turned to the “ON” position. This permits checking the operation of the bulbs.

Apply the parking brake and turn the ignition switch to the “ON” position. For the system check, the following lights illuminate and turn off after several seconds or after the engine has started:

: Seatbelt warning light (The seatbelt warning light turns off only when the driver fastens the seatbelt.)

: Front passenger’s seatbelt warning light (The seatbelt warning light turns off only when the front seat passenger fastens the seatbelt.)

: SRS airbag system warning light

/ON : Front passenger’s frontal airbag ON indicator light

/OFF : Front passenger’s frontal airbag OFF indicator light

CHECK ENGINE / : CHECK ENGINE warning light/ Malfunction indicator light

: Charge warning light

: Oil pressure warning light

ABS / (ABS): ABS warning light

: Vehicle Dynamics Control warning light/ Vehicle Dynamics Control operation indicator light

OFF: Vehicle Dynamics Control OFF indicator light

BRAKE / (!): Brake system warning light

PARK / (P): Electronic parking brake indicator light

: Power steering warning light

(!): Low tire pressure warning light (U.S. spec. models)

: Low fuel warning light

: Automatic headlight beam leveler warning light (if equipped)

(A): Auto Start Stop warning light (yellow)

If any lights fail to illuminate, it indicates a burned-out bulb or a malfunction of the corresponding system.

Consult your authorized SUBARU dealer for repair.

■ Seatbelt Warning Light and Chime

Your vehicle is equipped with a seatbelt warning device at the driver’s and front passenger’s seat, as required by current safety standards.

With the ignition switch turned to the “ON” position, this device reminds the driver and front passenger to fasten their seatbelts by the warning lights in the locations indicated in the following illustration and a chime.

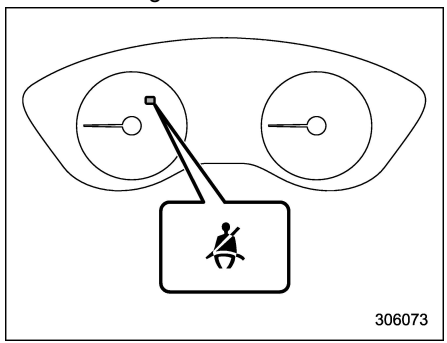

Driver’s warning light

– CONTINUED –

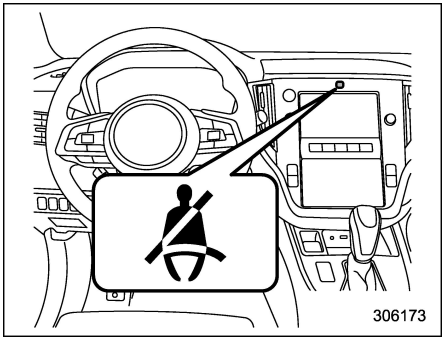

Front passenger's warning light (dual 7.0-inch display models)

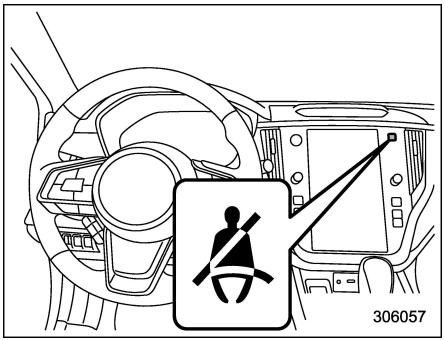

Front passenger's warning light (11.6-inch display models)

▼ Operation

If the driver and/or front passenger have/has not yet fastened the seatbelt(s) when the ignition switch is turned to the "ON" position, the seatbelt warning light(s) will flash for several seconds, to warn that the seatbelt(s) is/are unfastened. If the driver's seatbelt is not fastened, a chime will also sound simultaneously.

NOTE

- **If the driver's and/or front passenger's seatbelt(s) are/is still not fastened 6 seconds later, the seatbelt warning device operates as follows according to the vehicle speed.**
  - **– At speeds lower than approximately 9 mph (15 km/h)**
    The warning light(s) for unfastened seatbelt(s) will alternate between steady illumination and flashing at 15-second intervals. The chime will not sound.
  - **– At speeds higher than approximately 9 mph (15 km/h)**
    The warning light(s) for unfastened seatbelt(s) will alternate between flashing and steady illumination at 15-second intervals and the chime will sound while the warning light(s) is/are flashing.

If there is no passenger on the front passenger's seat, the seatbelt warning device for the front passenger's seat will be deactivated. The front passenger's occupant detection system monitors whether or not there is a passenger on the front passenger's seat.

Observe the following precautions. Failure to do so may prevent the device from functioning correctly or cause the device to fail.

- Do not install any accessory such as a table or a monitor display onto the seatback.
- Do not store a heavy item in the seatback pocket.
- Do not allow the rear seat passengers to place his/her hands or legs on the front passenger's seatback, or allow him/her to pull the seatback.
- Do not use front seats with their backward-forward position and seatback not being locked into place securely. If any of them are not locked securely, adjust them again. For adjusting procedure, refer to "Manual Seat" ☞P30 (models equipped with manual seats only).

If the seatbelt warning device for the front passenger's seat does not function correctly (e.g., it is activated even when the front passenger's seat is empty or it is

deactivated even when the front passenger has not fastened his/her seatbelt), take the following actions.

- Ensure that no article is placed on the seat other than a child restraint system and its child occupant.
- Ensure that there is no article left in the seatback pocket.
- Ensure that the backward-forward position and seatback of front passenger's seat are locked into place securely by moving the seat back and forth. (Models equipped with manual seats only)

If still the seatbelt warning device for front passenger's seat does not function correctly after taking relevant corrective actions described above, immediately contact your SUBARU dealer for an inspection.

■ SRS Airbag System Warning Light

WARNING

If the warning light exhibits any of the following conditions, there may be a malfunction in the seatbelt pretensioners and/or SRS airbag system.

- **Flashing or flickering of the warning light**
- **No illumination of the warning light when the ignition switch is first turned to the "ON" position**
- **Continuous illumination of the warning light**
- **Illumination of the warning light while driving**

Immediately take your vehicle to your nearest SUBARU dealer to have the system checked. Unless checked and properly repaired, the seatbelt pretensioners and/or SRS airbags will operate improperly (e.g. SRS airbags may inflate in a very minor collision or not inflate in a severe collision), which may increase the risk of injury.

For details about the components monitored by the warning light, refer to "SRS Airbag System Monitors" ☞P105.

■ Front Passenger's Frontal Airbag ON and OFF Indicators

NOTE

For details about the operating conditions of SRS seat cushion airbag, refer to "SUBARU Advanced Frontal Airbag System, SRS Seat Cushion Airbag, SRS Side Airbag and SRS Curtain Airbag" ☞P84.

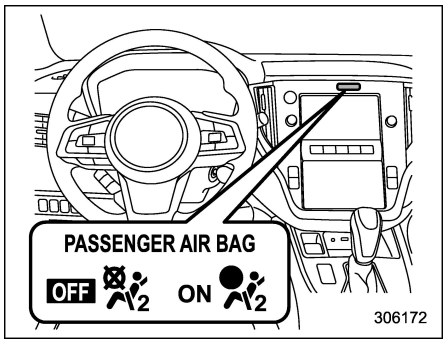

Dual 7.0-inch display models

ON: Front passenger's frontal airbag ON indicator

OFF: Front passenger's frontal airbag OFF indicator

– CONTINUED –

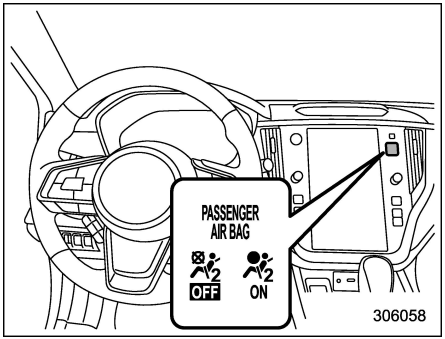

11.6-inch display models

ON: Front passenger's frontal airbag ON indicator

OFF: Front passenger's frontal airbag OFF indicator

The front passenger's frontal airbag ON and OFF indicators show you the status of the front passenger's SRS frontal airbag.

The indicators are located as shown in the illustration.

When the ignition switch is turned to the "ON" position, both the ON and OFF indicators illuminate for 6 seconds during which time the system is checked. Following the system check, both indicators turn off for 2 seconds. After that, one of the indicators illuminates depending on the status of the front passenger's SRS frontal airbag determined by the SUBARU advanced frontal airbag system monitoring.

If the front passenger's SRS frontal airbag is activated, the passenger's frontal airbag ON indicator will illuminate while the OFF indicator will remain off.

If the front passenger's SRS frontal airbag is deactivated, the passenger's frontal airbag ON indicator will remain off while the OFF indicator will illuminate.

With the ignition switch turned to the "ON" position, if both the ON and OFF indicators remain illuminated or off simultaneously even after the system check period, the system is malfunctioning. Contact your SUBARU dealer immediately for an inspection.

■ CHECK ENGINE Warning Light/Malfunction Indicator Light

CHECK ENGINE

⚠ CAUTION

If the CHECK ENGINE warning light/malfunction indicator light illuminates while you are driving, have your vehicle checked/repaired by your SUBARU dealer as soon as possible. Continued vehicle operation without having the emission control system checked and repaired as necessary could cause serious damage, which may not be covered by your vehicle's warranty.

If this light illuminates steadily or blinks while the engine is running, it may indicate that there is at least one problem or potential problem somewhere in the emission control system.

▼ If the light illuminates constantly

If the light illuminates constantly while driving or does not turn off after the engine starts, an emission control system malfunction has been detected.

You should have your vehicle checked by an authorized SUBARU dealer immediately.

NOTE

This light also illuminates when the fuel filler cap is not tightened until it clicks.

If you have recently refueled your vehicle, the cause of the CHECK ENGINE warning light/malfunction indicator light coming on could be a loose or missing fuel filler cap. Remove the cap and retighten it until it clicks. Make sure nothing is interfering with the sealing of the cap. Tightening the cap will not make the CHECK ENGINE warning light/malfunction indicator light turn off immediately. It may take several driving

trips. If the light does not turn off, take your vehicle to your authorized SUBARU dealer immediately.

▼ **If the light is blinking**

If the light is blinking while driving, an engine misfire condition has been detected which may damage the emission control system.

To prevent serious damage to the emission control system, you should conform to the following instructions.

- Reduce vehicle speed.
- Avoid hard acceleration.
- Avoid steep uphill grades.
- Reduce the amount of cargo, if possible.
- Stop towing a trailer as soon as possible (Outback).

The CHECK ENGINE warning light/malfunction indicator light may stop blinking and illuminate steadily after several driving trips. You should have your vehicle checked by an authorized SUBARU dealer immediately.

■ Charge Warning Light

If this light illuminates when the engine is running, it may indicate that the charging system is not working properly.

If the light illuminates while driving or does not turn off after the engine starts, stop the engine at the first safe opportunity and check the alternator belt. If the belt is loose, broken or if the belt is in good condition but the light remains illuminated, contact your nearest SUBARU dealer immediately.

■ Oil Pressure Warning Light

⚠ CAUTION

Do not operate the engine with the oil pressure warning light on. This may cause serious engine damage.

If this light illuminates when the engine is running, it may indicate that the engine oil pressure is low and the lubricating system is not working properly.

If the light illuminates while driving or does not turn off after the engine starts, stop the engine at the first safe opportunity and check the engine oil level. If the oil level is low, add oil immediately. If the engine oil is at the proper level but the light remains illuminated, contact your nearest SUBARU dealer immediately.

For details about checking the engine oil level or adding the engine oil, refer to "Engine Oil" ☞P481.

■ Engine Low Oil Level Warning Indicator

This indicator appears when the engine oil level decreases to the lower limit.

If the engine low oil level warning indicator appears while driving, park the vehicle at a safe and level location, and then check the engine oil level. When the engine oil level is not within the normal range, refill with engine oil. Refer to "Engine Oil" ☞P481.

If the warning indicator does not disappear after refilling with engine oil or the warning indicator appears even though the engine oil level is within the normal range, have the system checked by a SUBARU dealer.

NOTE

- **The warning light may stay illuminated when the engine is started straight after topping up or changing the engine oil. In such cases, park the vehicle on a level surface and wait for more than a minute until the oil level settles, after which the warning light will turn off.**
- **The warning light may illuminate temporarily in the following conditions because a low oil level may be detected as a result of significant oil movement in the engine.**

– CONTINUED –

– The vehicle is considerably inclined on an uphill or steep slope.

– The vehicle has continuously accelerated and decelerated.

– The vehicle is continuously turned.

– The vehicle is driven on a road that alternates continuously between uphill and downhill.

■ AT OIL TEMP Warning Light

AT OIL TEMP

If this light illuminates when the engine is running, it may indicate that the transmission fluid temperature is too hot.

If the light illuminates while driving, immediately stop the vehicle in a safe place and let the engine idle until the warning light turns off.

▼ Transmission control system warning

If the “AT OIL TEMP” warning light flashes after the engine has started, it may indicate that the transmission control system is not working properly. Contact your nearest SUBARU dealer for service immediately.

■ Low Tire Pressure Warning Light (U.S. Spec. Models)

When the ignition switch is turned to the “ON” position, the low tire pressure warning light will illuminate for approximately 2 seconds to check that the tire pressure monitoring system (TPMS) is functioning properly. If there is no problem and all tires are properly inflated, the light will go out.

Each tire, including the spare (if provided), should be checked monthly when cold and inflated to the inflation pressure recommended by the vehicle manufacturer on the vehicle placard or tire inflation pressure label. (If your vehicle has tires of a different size than the size indicated on the vehicle placard or tire inflation pressure label, you should determine the proper tire inflation pressure for those tires.)

As an added safety feature, your vehicle has been equipped with a tire pressure monitoring system (TPMS) that illuminates a low tire pressure telltale when one or more of your tires is significantly underinflated. Accordingly, when the low tire pressure telltale illuminates, you should stop and check your tires as soon as possible, and inflate them to the proper pressure. Driving on a significantly underinflated tire causes the tire to overheat and can lead to tire failure. Under-inflation also reduces fuel efficiency and tire tread life, and may affect the vehicle’s handling and stopping ability.

Please note that the TPMS is not a substitute for proper tire maintenance, and it is the driver’s responsibility to maintain correct tire pressure, even if under-inflation has not reached the level to trigger illumination of the TPMS low tire pressure telltale.

Your vehicle has also been equipped with a TPMS malfunction indicator to indicate when the system is not operating properly. The TPMS malfunction indicator is combined with the low tire pressure telltale. When the system detects a malfunction, the telltale will flash for approximately one minute and then remain continuously illuminated. This sequence will continue upon subsequent vehicle start-ups as long as the malfunction exists. When the malfunction indicator is illuminated, the system may not be able to detect or signal low tire pressure as intended. TPMS malfunctions may occur for a variety of reasons, including the installation of replacement or alternate tires or wheels on the vehicle that prevent the TPMS from functioning properly. Always check the TPMS malfunction telltale after replacing one or more tires or wheels on your vehicle to ensure that the

replacement or alternate tires and wheels allow the TPMS to continue to function properly.

Should the warning light illuminate steadily after blinking for approximately one minute, have the system inspected by your nearest SUBARU dealer as soon as possible.

WARNING

If this light does not illuminate briefly after the ignition switch is turned ON or the light illuminates steadily after blinking for approximately one minute, you should have your Tire Pressure Monitoring System checked at a SUBARU dealer as soon as possible.

If this light illuminates while driving, never brake suddenly. Instead, perform the following procedure. Otherwise an accident involving serious vehicle damage and serious personal injury could occur.

1) **Keep driving straight ahead while gradually reducing speed.**
2) **Slowly pull off the road to a safe place.**

If this light still illuminates while driving after adjusting the tire pressure, a tire may have significant damage and a fast leak that causes the tire to lose air rapidly. If you have a flat tire, replace it with a spare tire as soon as possible.

When a spare tire is mounted or a wheel rim is replaced without the original pressure sensor/transmitter being transferred, the Low tire pressure warning light will illuminate steadily after blinking for approximately one minute. This indicates the TPMS is unable to monitor all four road wheels. Contact your SUBARU dealer as soon as possible for tire and sensor replacement and/or system resetting. If the light illuminates steadily after blinking for approximately one minute, promptly contact a SUBARU dealer to have the system inspected.

CAUTION

The tire pressure monitoring system is NOT a substitute for manually checking tire pressure. The tire pressure should be checked periodically (at least monthly) using a tire gauge. After any change to tire pressure(s), the tire pressure monitoring system will not re-check tire inflation pressures until the vehicle is first driven more than 20 mph (32 km/h). After adjusting the tire pressures, increase the vehicle speed to at least 20 mph (32 km/h) to start the TPMS re-checking of the tire inflation pressures. If the tire pressures are now above the severe low pressure threshold, the low tire pressure warning light should turn off a few minutes later. Therefore, be sure to install the specified size for the front and rear tires.

■ ABS Warning Light ABS/(ABS)

CAUTION

- **If any of the following conditions occur, we recommend that you have the ABS repaired at the first available opportunity by your SUBARU dealer.**
  - **The warning light does not illuminate when the ignition switch is turned to the "ON" position.**
  - **The warning light illuminates when the ignition switch is turned to the "ON" position, but it does not turn off even after starting the vehicle.**

– CONTINUED –

- **The warning light illuminates during driving.**

- **When the warning light is on (and brake system warning light is off), the ABS function shuts down; however, the conventional brake system continues to operate normally.**

The ABS warning light illuminates together with the brake system warning light if the EBD system malfunctions. For further details of the EBD system malfunction warning, refer to "Brake System Warning Light" ☞P182.

NOTE

If the warning light behavior is as described in the following conditions, the ABS may be considered normal.

- **The warning light illuminates right after the engine is started but turns off immediately, remaining off.**
- **The warning light remains illuminated after the engine has been started, but it turns off while driving.**
- **The warning light illuminates during driving, but it turns off immediately and remains off.**

When driving with an insufficient battery voltage such as when the engine is jump started, the ABS warning light may illuminate. This is due to the low battery voltage and does not indicate a malfunction. When the battery becomes fully charged, the light will turn off.

■ Brake System Warning Light BRAKE / (!)

⚠ WARNING

- **Driving with the brake system warning light on is dangerous. This indicates your brake system may not be working properly. If the light remains illuminated, have the brakes inspected by a SUBARU dealer immediately.**
- **If at all in doubt about whether the brakes are operating properly, do not drive the vehicle. Have your vehicle towed to the nearest SUBARU dealer for repair.**
- **If the brake system warning light illuminates, the electronic parking brake system may be malfunctioning. Immediately stop your vehicle in a safe location, use tire stops under the tires to prevent the vehicle from moving and contact your SUBARU dealer. For details, refer to "Electronic Parking Brake" ☞P355.**

NOTE

- **Even if the brake system warning light illuminates, if the warning light behavior is as described in the following examples, the electronic parking brake system is not malfunctioning.**
  - **The warning light turns off when the electronic parking brake is applied or released.**
  - **The warning light turns off when the ignition switch is turned to the "ON" position again.**
- **The brake system warning light may illuminate immediately after the engine is started. However, it is not malfunctioning if the warning light turns off after the electronic parking brake is released.**
- **The brake system warning light may illuminate after the electronic parking brake is frequently applied and released. However, the electronic parking brake system is not malfunctioning if the light turns off after a short period of time.**
- **When the engine is started while the electronic parking brake is applied/**

released, the system may judge an abnormal situation and the warning light may illuminate. If the warning light illuminates, turn the ignition switch once to the "LOCK"/"OFF" position and then restart the engine. Then, apply/release the electronic parking brake. If the warning light turns off, the system will be restored.

This light has the following functions.

▼ **Brake fluid level warning**

This light illuminates when the brake fluid level has dropped to near the "MIN" level of the brake fluid reservoir with the ignition switch in the "ON" position and with the parking brake fully released.

If the brake system warning light should illuminate while driving (with the parking brake fully released and with the ignition switch positioned in "ON"), it could be an indication of leaking of brake fluid or worn brake pads. If this occurs, immediately stop the vehicle at the nearest safe place and check the brake fluid level. If the fluid level is below the "MIN" mark in the reservoir, do not drive the vehicle. Have the vehicle towed to the nearest SUBARU dealer for repair.

▼ **Electronic Brake Force Distribution (EBD) system warning**

If the warning light remains on even though the parking brake is released, the brake fluid level may be low or there could be a problem with the EBD system. Park the vehicle in a safe place immediately and contact a SUBARU dealer.

▼ **Electronic parking brake system warning**

The brake system warning light illuminates when the electronic parking brake system is malfunctioning. If the warning light illuminates, promptly park in a safe location as soon as possible and contact your SUBARU dealer.

The brake system warning light remains illuminated when the parking brake cannot be released even if the parking brake switch is pushed. For details, refer to "Electronic Parking Brake" ☞P355.

▽ **Frequent operation warning**

The brake system warning light illuminates and a chirp sound will be heard if the parking brake switch is operated too frequently. In this case, the operation of the parking brake switch is restricted to protect the electronic parking brake system.

■ Electronic Parking Brake Indicator Light PARK / Ⓟ

▼ **Parking brake indicator**

The light illuminates with the parking brake applied while the ignition switch is in the "ACC" or "ON" position. It turns off when the parking brake is fully released.

▼ **Electronic parking brake system warning**

⚠ WARNING

- **When you release the electronic parking brake while the engine is running, the electronic parking brake indicator light will turn off. However, if the light still illuminates, stop the vehicle in a safe location immediately and have the system inspected by a SUBARU dealer.**
- **If at all in doubt about whether the brakes are operating properly, do not drive the vehicle. Have your vehicle towed to the nearest SUBARU dealer for repair.**
- **If the electronic parking brake indicator light flashes, the electronic parking brake system may be malfunctioning. Immediately**

– CONTINUED –

stop your vehicle in a safe location, use tire stops under the tires to prevent the vehicle from moving and contact your SUBARU dealer. For details, refer to "Electronic Parking Brake" ☞P355.

NOTE

- **When the ignition switch is turned to the "LOCK"/"OFF" position with the electronic parking brake applied, the electronic parking brake indicator light remains illuminated for approximately 30 seconds and then turns off.**
- **When the electronic parking brake switch is pulled to apply the electronic parking brake while the ignition switch is in the "LOCK"/"OFF" position, the electronic parking brake indicator light illuminates, remains illuminated for approximately 30 seconds and then turns off.**
- **Even if the electronic parking brake indicator light flashes, if the warning light behavior is as described in the following examples, the electronic parking brake system is not malfunctioning.**
  - **The indicator light turns off when the electronic parking brake is released.**
- **The electronic parking brake indicator light may flash immediately after the engine is started. However, it is not malfunctioning if the indicator light turns off after the electronic parking brake is released.**
- **The electronic parking brake indicator light may flash after the electronic parking brake is frequently applied and released. However, the electronic parking brake system is not malfunctioning if the light turns off after a short period of time.**

The electronic parking brake indicator light flashes when the electronic parking brake system is malfunctioning. If the indicator light flashes, promptly park in a safe location as soon as possible and contact your SUBARU dealer.

The electronic parking brake indicator light remains illuminated when the parking brake cannot be released even if the parking brake switch is pushed. For details, refer to "Electronic Parking Brake" ☞P355.

▽ **Parking brake apply inhibit warning**

The electronic parking brake indicator light flashes for 10 seconds and a chirp sound will be heard if the parking brake switch is operated when the parking brake cannot be applied.

▽ **Frequent operation warning**

The electronic parking brake indicator light flashes for 10 seconds and a chirp sound will be heard if the parking brake switch is operated too frequently. In this case, the operation of the parking brake switch is restricted to protect the electronic parking brake system.

NOTE

Wait until the indicator light turns off.

■ Auto Vehicle Hold ON Indicator Light AVH

⚠ CAUTION

If the Auto Vehicle Hold ON indicator light does not illuminate even when "Auto Vehicle Hold (AVH)" is touched to activate the Auto Vehicle Hold function, the electronic parking brake system may be malfunctioning.

This indicator light illuminates when the Auto Vehicle Hold is activated. For details, refer to "Auto Vehicle Hold function" ☞P357.

■ Auto Vehicle Hold Operation Indicator Light

This indicator light illuminates while the vehicle is stopped by the Auto Vehicle Hold function. For details, refer to “Auto Vehicle Hold function” ☞P357.

■ Low Fuel Warning Light

The low fuel warning light illuminates when the tank is nearly empty approximately 2.6 US gal (10.0 liters, or 2.2 Imp gal). It only operates when the ignition switch is in the “ON” position.

CAUTION

Promptly put fuel in the tank whenever the low fuel warning light illuminates. Engine misfires as a result of an empty tank could cause damage to the engine.

■ Door Open Indicator

When any of the doors, the rear gate (Outback) or the trunk lid (Legacy) is not fully closed, the door open indicator appears. This function is effective even if the ignition switch is in the “LOCK”/“OFF” or “ACC” position or the key is removed from the ignition switch (models without “keyless access with push-button start system”).

The open door is indicated by the corresponding part of the door open indicator.

Always make sure this indicator does not appear before you start to drive.

■ Engine Hood Open Warning Light

The warning light illuminates if the engine hood is not fully closed. This function is effective even if the ignition switch is in the “LOCK”/“OFF” or “ACC” position, or the key is removed from the ignition switch (models without “keyless access with push-button start system”).

Always make sure this light is not illuminated before you start to drive.

■ Windshield Washer Fluid Warning Light

This light appears when the fluid level in the windshield washer fluid tank decreases to the lower limit (approximately 0.6 US qt, 0.6 liter, 0.5 Imp qt).

■ All-Wheel Drive Warning Light AWD

WARNING

Continued driving with the AWD warning light flashing can lead to powertrain damage. If the AWD warning light flashes, promptly park in a safe location and then check whether all four tires are the same diameter and whether any of the tires has a puncture or has lost air pressure for some other reason.

NOTE

If the temporary spare tire is used, the AWD warning light may flash. Use of the temporary spare tire should therefore be restricted to the minimum time necessary. Replace the temporary spare tire with a conventional tire as soon as possible.

This light flashes if the vehicle is driven with tires of different diameters fitted on its wheels or with the air pressure excessively low in any of its tires.

– CONTINUED –

■ Power Steering Warning Light

While the engine is running, this warning light illuminates when a malfunction has been detected in the electric power steering system.

CAUTION

When the power steering warning light is illuminated, there may be more resistance when the steering wheel is operated. Drive carefully to the nearest SUBARU dealer and have the vehicle inspected immediately.

NOTE

If the steering wheel is operated in the following ways, the power steering control system may temporarily limit the power assist in order to prevent the system components, such as the control computer and drive motor, from overheating.

- **The steering wheel is operated frequently and turned sharply while the vehicle is maneuvered at extremely low speeds, such as while frequently turning the steering wheel during parallel parking.**
- **The steering wheel remains in the fully turned position for a long period of time.**

At this time, there will be more resistance when steering. However this is not a malfunction. Normal steering force will be restored after the steering wheel is not operated for a while and the power steering control system has an opportunity to cool down. However, if the power steering is operated in a non-standard way which causes power assist limitation to occur too frequently, that may result in a malfunction of the power steering control system.

■ Vehicle Dynamics Control Warning Light/Vehicle Dynamics Control Operation Indicator Light

▼ **Vehicle Dynamics Control warning light**

CAUTION

The Vehicle Dynamics Control system provides its ABS control through the electrical circuit of the ABS. Accordingly, if the ABS is inoperative, the Vehicle Dynamics Control system becomes unable to provide ABS control. As a result, the Vehicle Dynamics Control system becomes inoperative, causing the warning light to illuminate. Although both the Vehicle Dynamics Control and ABS are inoperative in this case, the ordinary functions of the brake system are still available. You will be safe while driving in this condition, but drive carefully and have your vehicle checked at a SUBARU dealer as soon as possible.

NOTE

- **If the electrical circuit of the Vehicle Dynamics Control system itself malfunctions, the warning light only illuminates. At this time, the ABS (Anti-lock Brake System) remains fully operational.**
- **The warning light illuminates when the electronic control system of the ABS/Vehicle Dynamics Control system malfunctions.**

The Vehicle Dynamics Control system is probably inoperative under any of the following conditions. Have your vehicle checked at a SUBARU dealer immedi-

ately.

- The warning light does not illuminate when the ignition switch is turned to the “ON” position.
- The warning light illuminates while the vehicle is running.

NOTE

If the warning light behavior is as described in the following examples, the Vehicle Dynamics Control system may be considered normal.

- **The warning light illuminates right after the engine is started but turns off immediately and remains off.**
- **The warning light illuminates after the engine has started and turns off while the vehicle is subsequently being driven.**
- **The warning light illuminates during driving, but turns off immediately and remains off.**

▼ Vehicle Dynamics Control operation indicator light

The indicator light flashes during activation of the skid suppression function and during activation of the traction control function.

NOTE

- **The light may remain illuminated for a short period of time after the engine has been started, especially in cold weather. This does not indicate the existence of a problem. The light should turn off as soon as the engine has warmed up.**
- **The indicator light illuminates when the engine has developed a problem and the CHECK ENGINE warning light/ malfunction indicator light is on.**

The Vehicle Dynamics Control system is probably malfunctioning under the following condition. Have your vehicle checked at a SUBARU dealer as soon as possible.

- The light does not turn off even after the lapse of several minutes (the engine has warmed up) after the engine has started.

■ Vehicle Dynamics Control OFF Indicator Light

The light illuminates when “Vehicle Dynamics Control” is selected to deactivate the Vehicle Dynamics Control system.

The Vehicle Dynamics Control system is probably malfunctioning under any of the following conditions. Have your vehicle checked at a SUBARU dealer immediately.

- The light does not illuminate while the system check.
- The light does not turn off even after a period of approximately 2 seconds after the ignition switch has been turned to the “ON” position.

■ Warning Chimes and Warning Indicator of the Keyless Access with Push-Button Start System (If Equipped)

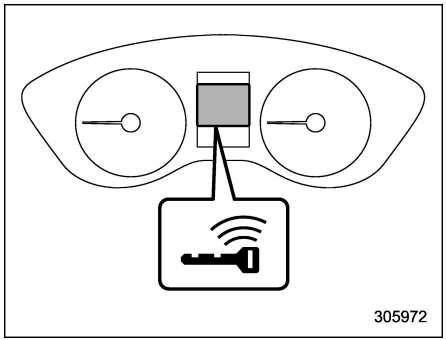

Access key warning indicator

The keyless access with push-button start system is equipped with a warning chime and the access key warning indicator in order to minimize improper operations and help protect your vehicle from theft.

When the warning chime sounds and/or the warning indicator appears, take the appropriate action.

– CONTINUED –

You cannot turn the warning chimes off. However, the volume setting of the outside warning chime can be changed by a SUBARU dealer. Consult your SUBARU dealer for details.

WARNING

Never drive the vehicle if the indicator on the push-button ignition switch is flashing in green when starting the engine. This indicates the status that the steering wheel is not released and could result in an accident involving serious injury or death.

CAUTION

- **When starting the engine again after the operation indicator on the push-button ignition switch flashes in green, if the operation indicator is still flashing in green, there could be a steering lock malfunction. Contact your SUBARU dealer as soon as possible.**
- **When the operation indicator on the push-button ignition switch flashes in orange, contact a SUBARU dealer immediately.**

NOTE

- **Even when the access key fob is within the operating ranges inside the vehicle, the access key warning for engine start may be provided depending on the status of the access key fob and the environmental conditions.**
- **When the access key fob is taken out of the vehicle through an open window, the access key takeout warning or passenger access key takeout warning will not be provided.**

▼ **List of warnings**

CAUTION

When any of the following warnings occurs even if the access key warning indicator does not appear, take the appropriate action.

Inside warning chime	Outside warning chime	Operation indicator on push-button ignition switch	Status	Action
Ding, ding ... (intermittent)	—	—	The driver's door is opened while the push-button ignition switch is "ACC" and the select lever is in the "P" position.	Switch the push-button ignition switch to "OFF", or close the driver's door. When exiting the vehicle, be sure to switch the push-button ignition switch to "OFF".
			The push-button ignition switch is switched to "OFF" while the driver's door is open.	Close the driver's door.
Ding	Short beep (2 seconds)	—	**Lockout warning:** The doors are locked by following methods when an access key fob is left in the car. ● The door is closed when the lock lever of the door is in the lock position. ● The door is closed when the power door locking switch is in the lock position.	Take out the access key fob from the vehicle, and lock the doors. The doors cannot be locked while the access key fob is inside the vehicle. A chirp sound will be heard, and all doors will be unlocked.
—	Short beep (2 seconds)	—	**Access key lock-in warning:** The door lock sensor is touched while the push-button ignition switch is "OFF" and the access key fob is inside the vehicle.	Take out the access key fob from the vehicle, and lock the doors. If the access key fob is inside the vehicle, the doors cannot be locked.
—	Beep, beep, beep, beep, beep (5 times)	—	**Door ajar warning:** The door lock sensor is touched while the ignition switch is in the "OFF" position and one of the doors including the rear gate is opened.	Close the doors securely and lock them. If one of the doors including the rear gate is opened, the doors cannot be locked.
Ding	Long beep (60 seconds max.)	—	**Power warning:** The door lock sensor is touched while you are carrying the access key fob, the push-button ignition switch is in a position other than "OFF" and the select lever is in the "P" position.	Return the access key fob inside the vehicle, or switch the push-button ignition switch to "OFF". If the push-button ignition switch is not switched to "OFF", the doors cannot be locked.
Ding, ding ... (7 seconds)	—	—	**Access key warning:** The vehicle is driven while the access key fob is not inside the vehicle.	Carry the access key fob, and drive the vehicle.

– CONTINUED –

Inside warning chime	Outside warning chime	Operation indicator on push-button ignition switch	Status	Action
Ding	—	—	**Access key warning for engine start:** The push-button ignition switch is pressed while the access key fob is not inside the vehicle.	Carry the access key fob, and press the push-button ignition switch.
Ding	Beep, beep, beep (3 times)	—	**Access key takeout warning:** The driver exits the vehicle with the access key fob and closes the driver's door while the push-button ignition switch is in a position other than "OFF" and the select lever is in the "P" position.	Switch the push-button ignition switch to "OFF", and get out of the vehicle.
Ding	Beep, beep, beep (3 times)	—	**Passenger access key takeout warning:** A fellow passenger exits the vehicle with the access key fob and closes a door other than the driver's door while the push-button ignition switch is in a position other than "OFF".	Return the access key fob to inside the vehicle, or switch the push-button ignition switch to "OFF".
Long beep (continuous)	Long beep (continuous)	—	**Access key takeout without "P" position warning:** The driver exits the vehicle with the access key fob and closes the driver's door while the push-button ignition switch is in a position other than "OFF" and the select lever is in a position other than the "P" position.	Shift the select lever to the "P" position, switch the push-button ignition switch to "OFF" and exit the vehicle.
Long beep (continuous)	—	—	**Select lever position warning:** ● Case 1: The engine is turned off by pressing the push-button ignition switch while the select lever is in a position other than the "P" position. ● Case 2: The driver's door is opened while the push-button ignition switch is in a position other than "OFF" and the select lever is in a position other than the "P" position.	● Case 1: Start the engine, shift the select lever to the "P" position, switch the push-button ignition switch to "OFF" and exit the vehicle. ● Case 2: Shift the select lever to the "P" position, switch the push-button ignition switch to "OFF" and exit the vehicle.

Inside warning chime	Outside warning chime	Operation indicator on push-button ignition switch	Status	Action
Ding	—	—	The battery of the access key fob is low.	Replace the battery of the access key fob.
Ding	—	Flashes in green (15 seconds max.)	**Steering lock warning:** The engine start procedure is performed, but the steering is still locked.	While turning the steering wheel right and left lightly, depress the brake pedal and press the push-button ignition switch.
Ding	—	Flashes in orange	**System malfunction warning:** A malfunction is detected in the power system or steering lock.	Contact a SUBARU dealer immediately and have the vehicle inspected.

– CONTINUED –

■ Security Indicator Light

This indicator light shows the status of the alarm system. It also indicates operation of the immobilizer system.

▼ Alarm system

It blinks to show the driver the operational status of the alarm system. For detailed information, refer to "Alarm System" ☞P140.

▼ Immobilizer system

The security indicator light starts blinking in the following conditions.

For models with "keyless access with push-button start system":

- Immediately after the push-button ignition switch is turned to the "OFF" position.
- Immediately after the driver's door is opened or closed when all of the following conditions are met.
  - The push-button ignition switch is in the "ON" or "ACC" position.
  - The engine is not running.

In the event that an unauthorized key is used (for example, the key is unregistered or the ID code does not match), the power is not switched to "ON" and the security indicator light continues blinking.

For models without "keyless access with push-button start system":

- Approximately 60 seconds after the ignition switch is turned from the "ON" position to the "ACC" or "LOCK" position.
- Immediately after the key is pulled out.

If the indicator light does not blink in the above conditions, it may indicate that immobilizer system may be malfunctioning. Contact your nearest SUBARU dealer immediately.

In the event that an unauthorized key (for example, an unauthorized duplicate) is used, the security indicator light illuminates. For details about the immobilizer system, refer to "Immobilizer" ☞P130.

NOTE

- **The security indicator light remains off in the following conditions. It means that the matching of the ID code is completed and the immobilizer system is deactivated, and it does not indicate a malfunction.**

  Models with "keyless access with push-button start system":
  - **while the engine is running**
  - **the push-button ignition switch has been turned to the "ON" or "ACC" position and the driver's door has not been opened or closed**

  Models without "keyless access with push-button start system":
  - **while the engine is running**
  - **for approximately 60 seconds after the ignition switch is turned from the "ON" position to the "ACC" or "LOCK" position**
  - **when the ignition switch is in the "ON" position.**

- **Even if a malfunction occurs, such as the security indicator light flashes irregularly, it will not affect the functionality of the immobilizer system.**

■ SI-DRIVE Indicator Light (If Equipped)

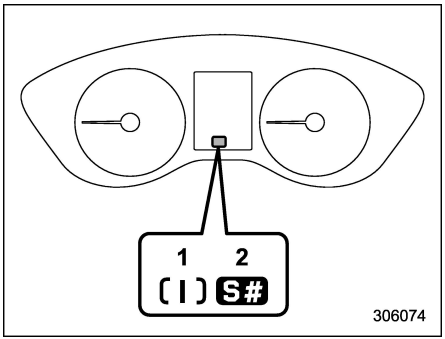

SI-DRIVE indicator light
1) Intelligent (I) mode
2) Sport Sharp (S#) mode

This light indicates the current SI-DRIVE mode.

For details of SI-DRIVE mode, refer to “SI-DRIVE” ☞P342.

■ Select Lever/Gear Position Indicator

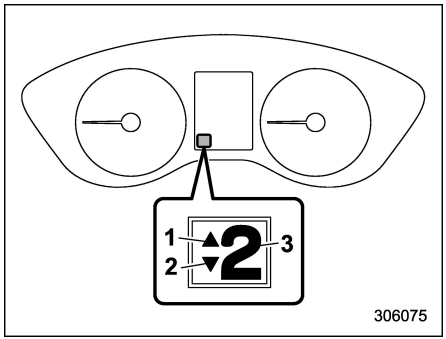

1) Upshift indicator
2) Downshift indicator
3) Select lever/gear position indicator

The select lever position is displayed on the indicator.

▼ Upshift/downshift indicator

When the manual mode is selected, the gear position indicator (which shows the current gear selection) and the available upshift/downshift indicator light up. Refer to “Selection of Manual Mode” ☞P340.

■ Turn Signal Indicator Lights

These lights show the operation of the turn signal or lane change signal.

If the indicator lights do not blink or blink rapidly, the turn signal bulb may be burned out. Replace the bulb as soon as possible. Refer to “Replacing Bulbs” ☞P508.

■ High Beam Indicator Light

This light shows that the headlights are in the high beam mode.

This indicator light also illuminates when operating the headlight flasher.

■ High Beam Assist Indicator

This indicator appears when the high beam assist function is activated. For details about the high beam assist function, refer to “High Beam Assist Function” ☞P244.

– CONTINUED –

■ Automatic Headlight Beam Leveler Warning Light (If Equipped)

This light illuminates when the automatic headlight beam leveler does not operate normally.

If this light illuminates while driving or does not turn off approximately 3 seconds after turning the ignition switch to the “ON” position, have your vehicle inspected at your SUBARU dealer.

■ LED Headlight Warning Light

This light illuminates if the LED headlights malfunction. Have your vehicle inspected at a SUBARU dealer as soon as possible.

■ Steering Responsive Headlight OFF Indicator Light (If Equipped)

SRH OFF

This light illuminates when the Steering Responsive Headlight function is off. For details about the on/off setting, refer to “Car settings” ☞P215.

■ Steering Responsive Headlight Warning Light (If Equipped)

SRH

The light flashes when a malfunction occurs in the Steering Responsive Headlight. Refer to “Steering Responsive Headlight (SRH)” ☞P248.

■ Headlight Indicator Light

This indicator light illuminates under the following conditions.

- When the light switch is turned to the “≡DOC≡” or “≡D” position
- When the light switch is in the “AUTO” position and the headlights illuminate automatically

■ Front Fog Light Indicator Light (If Equipped)

This indicator light illuminates while the front fog lights are illuminated.

■ Auto Start Stop Warning Light (Yellow)

CAUTION

- **If the Auto Start Stop warning light is illuminated in yellow, there may be a malfunction in the Auto Start Stop system. When starting the engine again after the Auto Start Stop warning light illuminates, if it is still illuminating, have your vehicle inspected at a SUBARU dealer as soon as possible.**

The Auto Start Stop warning light will illuminate in yellow if you open the engine hood when the engine has been temporarily stopped by the Auto Start Stop system.

In this case, to ensure safety, the engine will not be automatically restarted, even if you release the brake pedal. Use normal operation to restart the engine.

■ Auto Start Stop OFF Indicator Light

This light will illuminate when “Auto Start Stop” is touched to prevent the Auto Start Stop system from operating. It will turn off when “Auto Start Stop” is touched once more to enable operation of the Auto Start Stop system. For details about the setting, refer to “Car settings” ☞P215 (11.6-inch display models) or “Setting of the upper display” ☞P228 (dual 7.0-inch display models).

CAUTION

If the Auto Start Stop OFF indicator light does not illuminate when "Auto Start Stop" is touched, contact a SUBARU dealer for an inspection as soon as possible.

■ Auto Start Stop Indicator Light (Green)

This indicator light illuminates when the engine has been temporarily stopped by the Auto Start Stop system. It will turn off when the engine is restarted.

■ Auto Start Stop No Activity Detected Indicator Light

When a vehicle is stopped, the indicator light illuminates when the operating condition of idling stop are not meet. The light will turn off when the vehicle starts driving. Refer to "Non-operational conditions" ☞P363.

■ X-MODE Indicator (Outback)

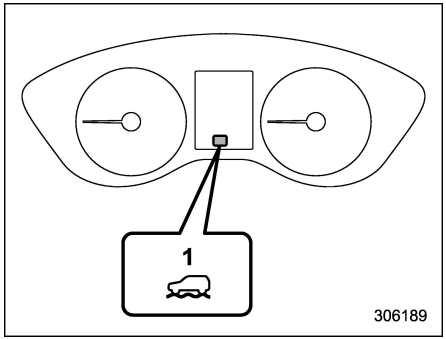

X-MODE indicator (models with 1 mode)
1) X-MODE indicator

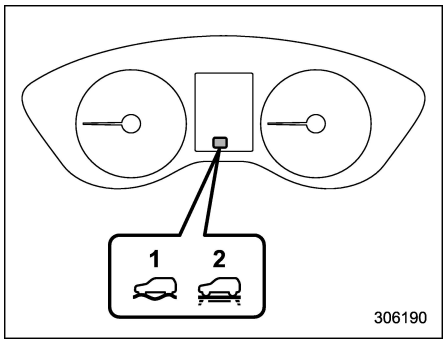

X-MODE indicator (models with 2 modes)
1) DEEP SNOW/MUD mode indicator
2) SNOW/DIRT mode indicator

This indicator appears while the X-MODE is activated. It will disappear when the X-MODE is deactivated. Refer to "To Activate/Deactivate the X-MODE" ☞P351.

■ Hill Descent Control Indicator (Outback)

This indicator appears while the hill descent control function is in standby. It will flash while the hill descent control function is operating. It will disappear when the hill descent control function is not available.

■ BSD/RCTA Warning Indicator (If Equipped)

This warning indicator appears on the combination meter display (color LCD) when the BSD (Blind Spot Detection) or RCTA (Rear Cross Traffic Alert) is not functioning for any reason. For further details, refer to "BSD/RCTA Warning Indicator" ☞P380. If this indicator remains displayed, have your vehicle inspected by your SUBARU dealer as soon as possible.

■ BSD/RCTA OFF Indicator (If Equipped)

This indicator appears on the combination meter display (color LCD) when "BSD/RCTA" is touched to deactivate the BSD (Blind Spot Detection) and RCTA (Rear

– CONTINUED –

Cross Traffic Alert), or when the BSD/RCTA is suspended temporarily. For details, refer to “BSD/RCTA OFF Indicator” ☞P379.

■ Icy Road Surface Warning Indicator

When the outside temperature is 37°F (3°C) or less, the icy road surface warning indicator will illuminate to inform the driver that the road surface may be frozen.

NOTE

- **The outside temperature indicator shows the temperature in the area around the sensor. Therefore, the temperature indication may differ from the actual outside air temperature.**
- **The icy road surface warning indicator should be treated only as a guide. Be sure to check the condition of the road surface before driving.**
- **Once the icy road surface warning indicator appears, it will not disappear unless the outside temperature has increased to 41°F (5°C) or higher.**

■ RAB Warning Indicator (If Equipped)

RAB

This indicator illuminates if the Reverse Automatic Braking System malfunctions. Refer to “Reverse Automatic Braking System” ☞P383.

■ RAB OFF Indicator (If Equipped)

RAB OFF

This indicator illuminates when the Reverse Automatic Braking System is turned OFF, or when the Reverse Automatic Braking System is suspended temporarily. Refer to “Reverse Automatic Braking System” ☞P383.

■ Driver Monitoring System Operation Indicator Light (Green) (If Equipped)

This indicator illuminates when the Driver Monitoring System is activated. Refer to “Driver Monitoring System operation indicator light (green)” ☞P402.

■ Driver Monitoring System Warning Light (Yellow) (If Equipped)

This warning light illuminates if the Driver Monitoring System malfunctions. Have your vehicle inspected at a SUBARU dealer as soon as possible. Refer to “Driver Monitoring System operation indicator light (green)” ☞P402.

■ Driver Monitoring System OFF Indicator Light (If Equipped)

OFF

This indicator illuminates when “Driver Monitoring System” is touched to deactivate the Driver Monitoring System. Refer to the “Driver Monitoring System OFF indicator light” ☞P402.

■ Driver Monitoring System Temporary Stop Indicator Light (If Equipped)

This indicator illuminates when the Driver Monitoring System is temporarily stopped. Refer to “Driver Monitoring System temporary stop indicator light” ☞P402.

NOTE

The Driver Monitoring System stops temporarily in the following circumstances.

- **The temperature of the Driver Monitoring System unit is high.**

■ Sonar Audible Alarm OFF Indicator (If Equipped)

This indicator illuminates when the sonar audible alarm is turned OFF. For the setting procedure, refer to “Car settings” ☞P215.

3-7. Combination Meter Display (Color LCD)

WARNING

Always pay adequate attention to safe driving when operating the combination meter display (color LCD) while the vehicle is in motion. When operation of the combination meter display (color LCD) interferes with your ability to concentrate on driving, stop the vehicle before performing operations on the screen. Also, do not concentrate on the display while driving. Doing so may cause you to look away from the road and could result in an accident.

Various information will be shown on the combination meter display (color LCD). Also, a warning message will appear on the display if a malfunction. is detected. In addition, several settings for the displayed content can be performed.

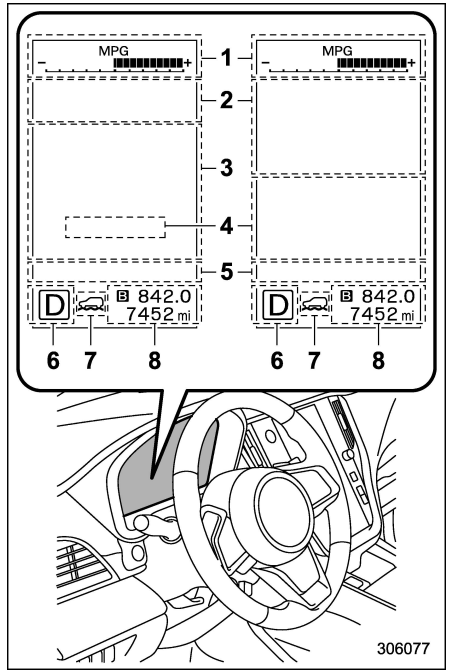

Combination meter display (color LCD)

1) Meter information screen (Refer to “Meter Information Screen” ☞P199.)
2) Warning screen (Refer to “Warning Screen” ☞P199.)/Basic screen (Refer to “Basic Screens” ☞P201.)
3) EyeSight screen*
4) Digital speed screen (Refer to “Digital

– CONTINUED –

Speed Screen” ☞P204.)

5) Telltale screen (Refer to “Telltale Screen” ☞P200.)
6) Select lever/gear position indicator (Refer to “Select Lever/Gear Position Indicator” ☞P193.)
7) X-MODE indicator (Outback) (Refer to “X-MODE Indicator (Outback)” ☞P195.) SI-DRIVE indicator (if equipped) (Refer to “SI-DRIVE Indicator Light” ☞P193.)
8) Odometer (Refer to “Odometer” ☞P171.)/Double trip meter (Refer to “Double Trip Meter” ☞P172.)

*: For details, refer to the separate EyeSight Owner’s Manual.

■ Basic Operation

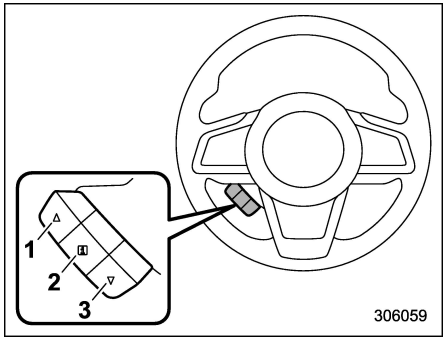

Control switches

1) ▲
2) i
3) ▼

By operating ▲ or ▼ of the control switches, the screens can be changed.

If there are some useful messages, such as vehicle information, warning information, etc., they will interrupt the current screen, and appear on the display accompanied by a beep. If such a screen is displayed, take proper action according to the message shown on the screen.

The warning screen will return to the original screen after a few seconds. While the i information reminder is shown on the display, it may be possible to display the warning screen again. To recall the message marked with i on the display, pull the i switch on the steering wheel toward you.

■ Welcome Screen (Opening Animation) and Good-Bye (Ending Animation) Screen

When the driver’s door is opened and closed after unlocking the door, the welcome screen (opening animation) will appear on the combination meter display (color LCD) for approximately 20 seconds.

When the ignition switch is turned to the “LOCK”/“OFF” position, the combination meter display (color LCD) gradually turns off by showing good-bye screen (ending animation).

NOTE

- **The welcome screen and the good-bye screen may differ in the actual words and appearance.**
- **The basic screen will be shown when the ignition switch is turned to the “ON” position while the welcome screen is displayed.**
- **Once the welcome screen appears, it takes a certain period of time to display it again.**
- **If the ignition switch is operated after unlocking the driver’s door, the**

welcome screen will not appear even when the driver's door is opened and closed.

- **The welcome screen will disappear when you lock the driver's door by using the remote keyless entry system (all models) or the keyless access function (if equipped) while the welcome screen is displayed.**
- **The welcome screen including the audio/navigation unit can be set to on or off.**
- **The welcome screen can be set to on or off. For details, refer to "General settings" ☞P211 (11.6-inch display models) or "General settings" ☞P228 (dual 7.0-inch display models).**
- **The good-bye screen can be set to on or off. For details, refer to "General settings" ☞P211 (11.6-inch display models) or "General settings" ☞P228 (dual 7.0-inch display models).**

■ Warning Screen

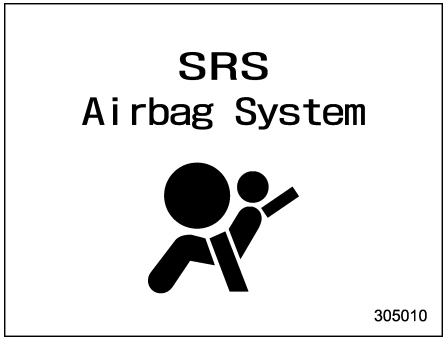

Example of warning

If there is a warning message or a maintenance notification, it will appear on combination meter display (color LCD). Take the appropriate actions based on the messages indicated.

■ Meter Information Screen

The meter information screen can be changed. For details, refer to "General settings" ☞P211 (11.6-inch display models) or "General settings" ☞P228 (dual 7.0-inch display models).

▼ ECO gauge

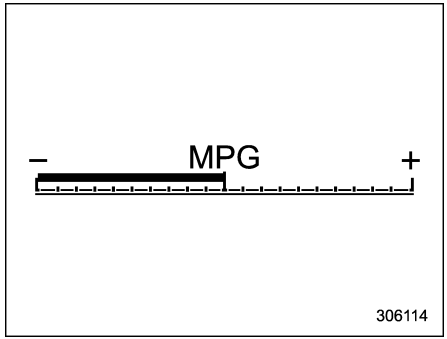

The ECO gauge shows the difference between the average rate of fuel consumption since the trip meter was last reset and the current rate of fuel consumption.

The ECO gauge indicates the current fuel efficiency as shown in the following chart.

Displayed unit	Needle position	
	"+" side	"–" side
MPG	Better	Poorer
l/100km	Poorer	Better

– CONTINUED –

NOTE

- **The ECO gauge shows only an approximate indication.**
- **After resetting the trip meter, the average rate of fuel consumption is not shown until driving 0.6 mile (1 km). Until that time, the ECO gauge does not operate.**

▼ Clock and temperature

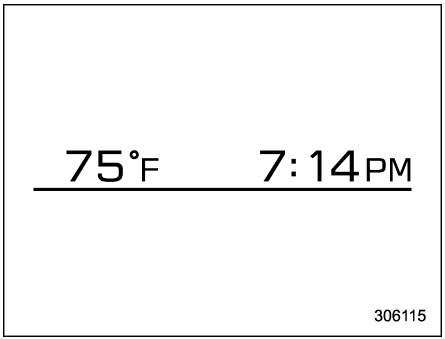

This screen displays the clock and outside temperature.

For details about clock setting, refer to "Clock" ☞P239.

▼ Compass (if equipped)

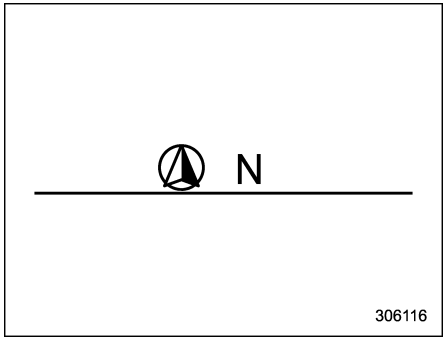

The direction of the vehicle is displayed.

▼ Driving range on remaining fuel

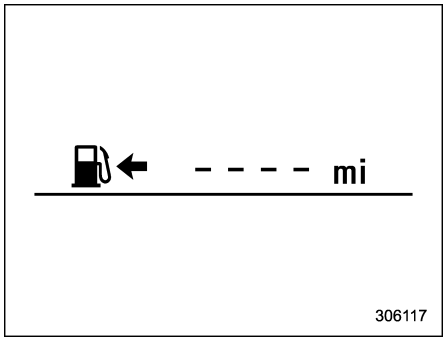

NOTE

The driving range on the remaining fuel is only a guide. The indicated value may differ from the actual driving range on the remaining fuel, so you must immediately fill the tank when the low fuel warning light illuminates.

■ Telltale Screen

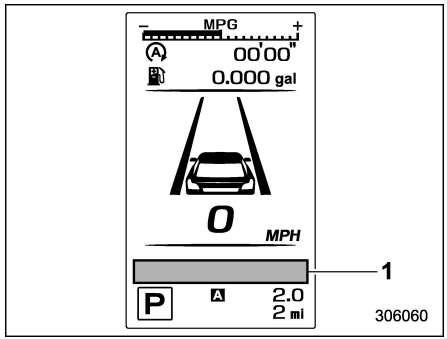

1) Telltale screen

When the corresponding situation occurs, the following telltales will be displayed on the telltale screen.

NOTE

- **When there is warning information to display, it will be displayed in five warning indicators, starting on the left in ascending order of severity.**
- **If there are 6 or more warning**

messages to display, the indicators will be displayed in sequential order.

Mark	Name	Page
	Door open indicator light	185
	Engine hood open warning light	185
	LED headlight warning light	194
	High beam assist indicator light	193
SRH OFF	Steering Responsive Headlight OFF indicator light (if equipped)	194
SRH	Steering Responsive Headlight warning light (if equipped)	194
	Engine low oil level warning light	179
RAB	RAB warning light (if equipped)	196
RAB OFF	RAB OFF indicator (if equipped)	196
	BSD/RCTA warning light (if equipped)	195
	BSD/RCTA OFF indicator light (if equipped)	195
	Auto Start Stop warning light (yellow)	194
	Auto Start Stop OFF indicator light	194
	Auto Start Stop indicator light (green)	195
	Auto Start Stop No Activity Detected indicator light	195
	Automatic headlight beam leveler warning light (if equipped)	194
	Windshield washer fluid warning light	185
	Hill descent control indicator light (Outback)	195
	Driver Monitoring System operation indicator light (green) (if equipped)	196
	Driver Monitoring System warning light (yellow) (if equipped)	196
	Driver Monitoring System OFF indicator light (if equipped)	196
	Driver Monitoring System temporary stop indicator light (if equipped)	196
	Icy road surface warning light	196

■ Basic Screens

By operating the ▲ or ▼ switch on the steering wheel, you can change the screen that is always displayed.

Average fuel consumption screen:

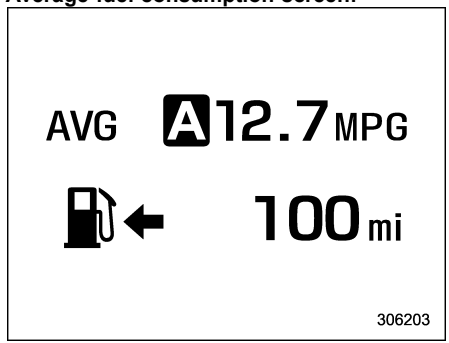

AVG: Average fuel consumption
: Driving range on remaining fuel

This screen displays the average rate of fuel consumption since the trip meter was last reset.

– CONTINUED –

NOTE

The driving range on the remaining fuel is only a guide. The indicated value may differ from the actual driving range on the remaining fuel, so you must immediately fill the tank when the low fuel warning light illuminates.

Current fuel consumption screen:

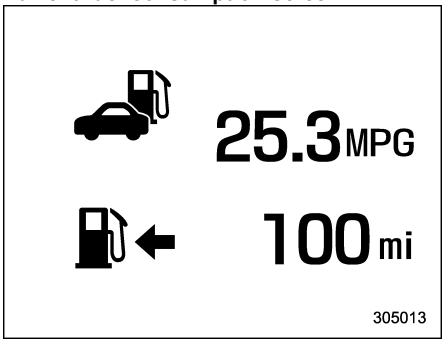

: Current fuel consumption
: Driving range on remaining fuel

NOTE

The driving range on the remaining fuel is only a guide. The indicated value may differ from the actual driving range on the remaining fuel, so you must immediately fill the tank when the low fuel warning light illuminates.

Driving information screen:

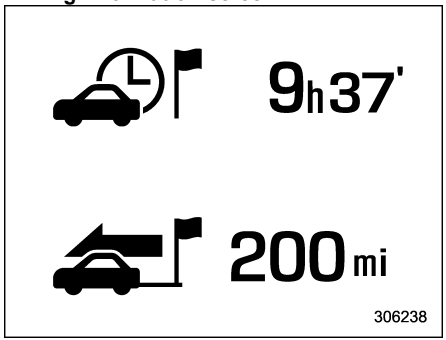

: Journey time
: Journey distance

This screen displays the journey time (the time that has elapsed since the ignition switch was turned to the “ON” position) and journey distance (the distance that has been driven since the ignition switch was turned to the “ON” position).

Auto Start Stop screen:

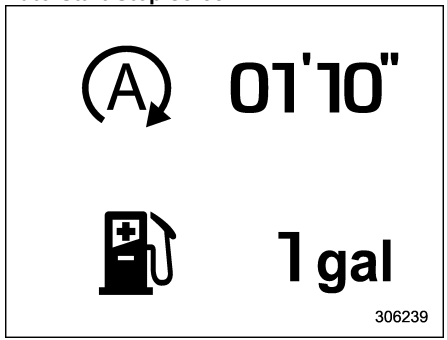

: The total amount of time that the engine was stopped by means of the Auto Start Stop system
: The total amount of fuel saved due to the engine being stopped by the Auto Start Stop system

The indicated values are calculated from the most recent reset of the currently displayed trip meter to the current time. The indication ranges are as follows.

- Total amount of time: from 00′00″ to 9999h59′59″
- Total amount of fuel saved: from 0 gal to 9999.999 gal

NOTE

- **When the trip meter is reset, the corresponding accumulated time and the amount of fuel saving are also reset.**

- **The time spent with the engine stopped by means of the Auto Start Stop system is also added to the journey time.**

TPMS screen (U.S.-spec. models):

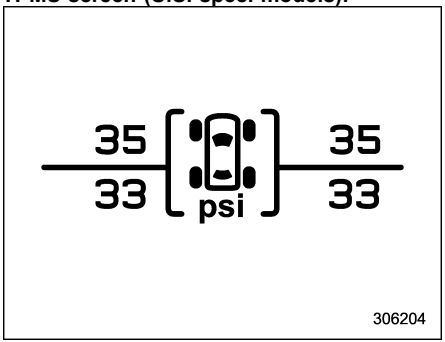

This screen displays each tire pressure.

When a tire is deflated, the deflated tire and the tire pressure will be displayed on the screen in yellow.

NOTE

- **The tire pressure values are displayed several minutes after driving.**
- **Once the tire pressure monitoring system detects the low tire pressure, the tire pressure values will display in yellow until the system detects the normal tire pressure.**
- **Immediately adjust the tire pressure when the warning light illuminates. When the tire pressure monitoring system detects the adjusted tire pressure, the warning light will turn off and the tire pressure values will turn to white.**

Compass screen (if equipped):

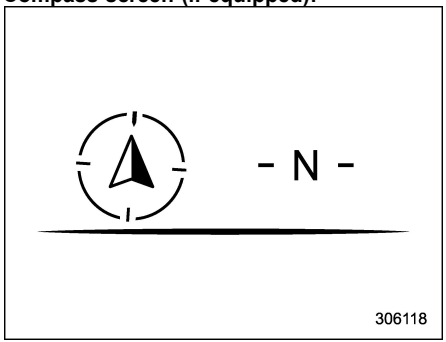

The direction of the vehicle is displayed.

Navigation screen (if equipped):

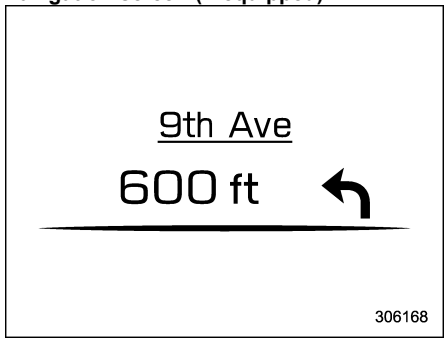

When the route guidance is set in the navigation system, this item shows the navigation route information. For details about the navigation system, refer to the separate navigation/audio Owner's Manual.

– CONTINUED –

Audio screen:

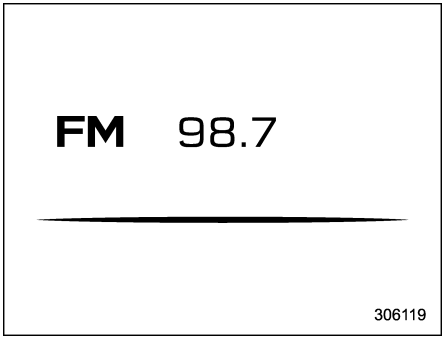

The audio screen shows the status of audio information. For details about the audio system, refer to the separate navigation/audio Owner's Manual.

Clock and outside temperature screen:

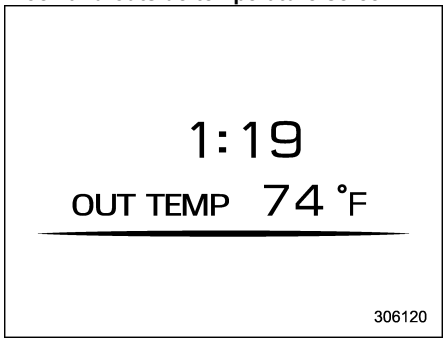

This screen displays the clock and outside temperature.

For details about clock setting, refer to "Clock" ☞P239.

■ Digital Speed Screen

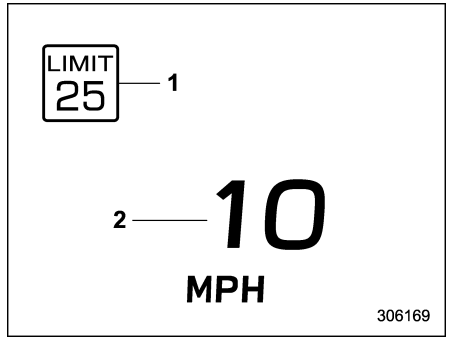

1) Speed limit indicator (if equipped)
2) Vehicle speed

This screen displays the current vehicle speed.

3-8. Center Information Display (CID)

WARNING

Always pay attention to safe driving when operating the center information display while the vehicle is in motion. When operation of the center information display is disturbing your awareness and ability to concentrate on driving, stop the vehicle in a safe place before performing operations on the display. Also, do not concentrate on the display while driving. Doing so could result in an accident.

■ Features

All information is displayed on the center information display, including vehicle settings, vehicle status, navigation system (if equipped) operation, audio operation, and air conditioning operation.

Items	Page for 11.6-inch display models	Page for dual 7.0-inch display models
Interruption screen	206	
Vehicle status and maintenance information	207	233
Vehicle settings	211	228/231
Climate control operations	211	228
Front View Monitor (if equipped)/ Rear view camera	336/369	
Navigation system	Refer to the navigation/ audio Owner's Manual.	
Audio/telephone	Refer to the navigation/ audio Owner's Manual.	
EyeSight	Refer to the Owner's Manual supplement for the EyeSight system.	

The center information display can also be used to set and initialize the center information display itself.

NOTE

- **When the vehicle is in motion, certain functions and selections may not be available.**
- **The language and units for both the center information display and the combination meter display (color LCD) can be changed. For details, refer to "Car settings" ☞P215 (11.6-inch display models) or "Setting of the upper display" ☞P228 (dual 7.0-inch display models).**
- **The images displayed in this Owner's Manual are sample images. The actual image may vary depending on the region and vehicle specifications.**

■ Welcome Screen

When the driver's door is opened and closed, the welcome screen will appear for a short time.

NOTE

- **The welcome screen will disappear when the ignition switch is turned to the "ON" position while the welcome screen is shown.**
- **The welcome screen can be turned on or off. For details, refer to "General settings" ☞P211 (11.6-inch display models) or "General settings" ☞P228 (dual 7.0-inch display models).**
- **For a certain period of time after the welcome screen has once appeared, it may not appear again even when the driver's door is opened and closed. This does not indicate a malfunction.**

– CONTINUED –

■ Good-Bye Screen

The good-bye screen will be displayed under the following conditions.

- The driver's door is opened after the ignition switch is put in the "OFF" position.
- 3 minutes have passed after the ignition switch is put in the "OFF" position with the driver's door closed.
- 10 minutes have passed when the hands-free phone is used after the ignition switch is put in the "OFF" position.
- The battery voltage is low when the ignition switch is put in the "OFF" position.

■ Interruption Screen

Useful messages, such as reminders, weather information (if equipped) and traffic information (if equipped) may interrupt the current screen and appear on the display accompanied by a beep. Take the proper action according to the message.

■ Touch Screen Operations

The center information display has a touch screen. Operations are performed by touching the touch screen directly.

▼ **Touch**

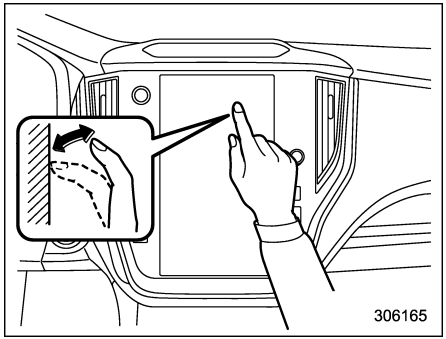

Quickly touch and release once.

▼ **Drag**

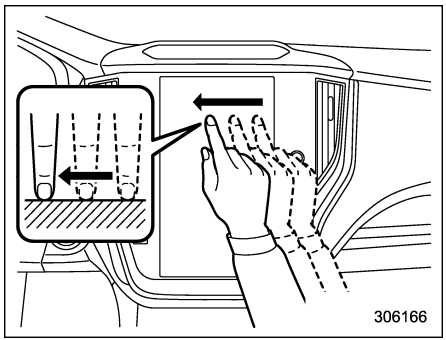

Touch the screen and move the screen to the desired position.

▼ **Swipe**

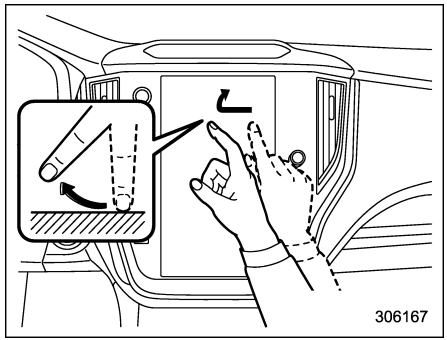

Quickly move the screen by swiping with your finger.

NOTE

Swipe operations may not be performed smoothly in high altitudes.

■ 11.6-inch Display Models (If Equipped)

NOTE

For dual 7.0-inch display models, refer to "Dual 7.0-inch Display Models" ☞P227.

▼ Touch screen

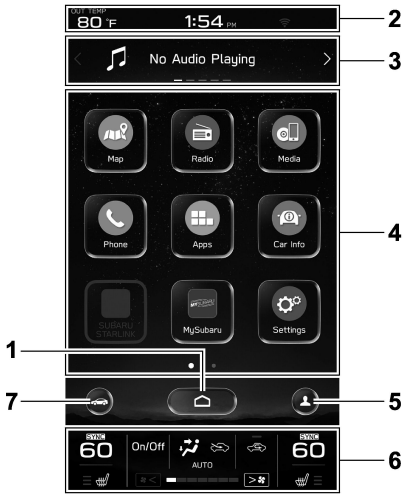

306126

1) HOME icon (Refer to “HOME icon” ☞P211.)
2) Status bar (Refer to “Status bar” ☞P207.)
3) Information bar (Refer to “Information bar” ☞P207.)
4) Main screen (Refer to “Main screen” ☞P211.)
5) Driver profiles icon (Refer to “Driver profiles icon” ☞P211.)
6) Climate control screen (Refer to “Climate control screen” ☞P211.)
7) Car settings icon (Refer to “Car settings icon” ☞P209.)

While the ignition switch is in the “ACC” or “ON” position, the touch panel will activate.

▽ Status bar

The outside temperature and clock are displayed on the status bar.

NOTE

- **The outside temperature indicator shows the temperature around the sensor. Therefore, the temperature indication may differ from the actual outside air temperature.**
- **The temperature unit cannot be changed.**
- **The clock can be displayed in either 12-hour display or 24-hour display. For details, refer to “Clock” ☞P239.**
- **For details about Bluetooth device information, refer to the navigation/audio Owner’s Manual.**

▽ Information bar

Swipe the information bar or touch < or > on the information bar to switch the item displayed.

Audio screen:

306127

The screen of the currently selected audio source is displayed.

For details about how to use the audio set, refer to the separate navigation/audio Owner’s Manual.

– CONTINUED –

Navigation screen (models with navigation system):

The directions to the destination are displayed on the screen.

NOTE

When a destination is not set in the navigation system, the compass orientation, street name and speed limit remain displayed on the screen.

Favorite screen:

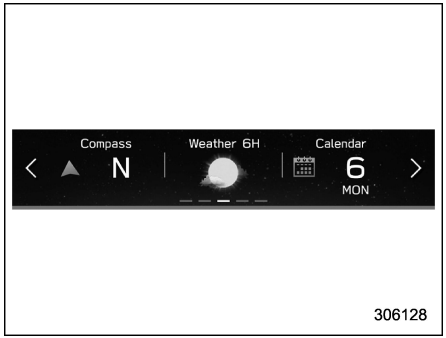

Favorite screen

This screen displays up to three optional pieces of information that can be selected from the following items.

Item	Details
Water Temp Norm	Engine coolant temperature
Oil Temp 158 °F	Engine oil temperature
AVG. A Speed 0 MPH	Average vehicle speed
Accel 49 %	Accelerator opening ratio
Angle 0°	Vehicle posture
Compass N	Direction of the vehicle*1
Weather 3H	Weather information for the next three hours*2
Weather 6H	Weather information for the next six hours*2
Speed Limit LIMIT 25	Posted speed limit of the road you are currently driving on*1
Calendar 6 MON	Calendar
Fuel ECO MPG Driver A	Driver Monitoring System*1 information and the average fuel consumption of driver
	Nothing is displayed.

*1: If equipped
*2: Models with SiriusXM Satellite Radio

NOTE

Some items may not be shown depending on the model and specifications.

The items shown on the favorite screen can be changed. For details, refer to “Favorite Widgets” ☞P221.

Weather information screen (if equipped):

306218

NOTE

- **When all of the following conditions are satisfied, weather information is displayed.**
  - **The vehicle is equipped with an audio and navigation system for SiriusXM satellite radio.**
  - **The SiriusXM satellite radio subscription is active.**
- **The weather forecast for the set destination remains displayed until a new destination is set or until the destination is reached.**
- **Depending on the reception timing of XM, the weather information may be delayed.**

X-MODE screen (Outback):

306129

Models with 1 mode

306171

Models with 2 modes

The X-MODE information is displayed on the screen.

Also, X-MODE can be switched to a different mode on the screen.

▽ Main screen

For details about the following menu, refer to the separate navigation/audio Owner's Manual.

- Radio
- Media
- Phone
- Map
- Apps
- My Subaru
- SUBARU STARLINK
- Add to Shortcuts

▽ Car settings icon

Touch to display the items that are changeable while driving.

– CONTINUED –

Item		Available settings	Page reference for the vehicle system operation	Page reference for the setting procedure
1st menu	2nd menu			
Vehicle Control	Vehicle Dynamics Control	ON/OFF	349	220
	X-MODE*1	Models with 1 mode: ON/OFF Models with 2 modes: Normal, Deep Snow/Mud, Snow/Dirt	351	220
	Auto Vehicle Hold (AVH)	ON/OFF	357	220
	Steering Responsive Headlights (SRH)*1	ON/OFF	248	220
Driving Assistance	Pre-Collision Braking	Setting ON/Setting OFF	Refer to the Owner's Manual supplement for the EyeSight system.	—
	Lane Departure Prevention Function	All Functions/Lane Departure Prevention Function Only/Warning Buzzer Only/OFF		
	BSD/RCTA*1	ON/OFF	379	220
Others	Cruise Control Acceleration Characteristics	Lv.1 (Eco)/Lv.2 (Comfort)/Lv.3 (Standard)/Lv.4 (Dynamic)	Refer to the Owner's Manual supplement for the EyeSight system.	—
	Warning Volume	Min/Mid/Max	378, 392 and *2	
	Units	km, km/h, Liter/ Miles, MPH, Gallon	171 and 197	220
	Auto Start Stop	ON/OFF	364	220
	Driver Monitoring System*1	ON/OFF	394	220

*1: If equipped.
*2: For details about the EyeSight system, refer to the Owner's Manual supplement for the EyeSight system.

▽ Driver profiles icon

Touch (driver profiles icon) to confirm the driver's information. For details, refer to the separate navigation/audio Owner's Manual.

▽ HOME icon

Touch (HOME) to display the top menu.

▽ Climate control screen

The climate control status is shown on the screen.

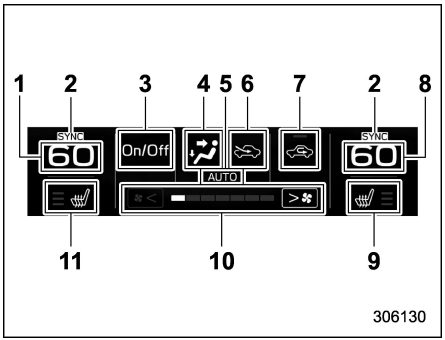

1) Set temperature indicator (left-hand side)
2) SYNC mode indicator
3) Climate control ON/OFF button
4) Airflow mode
5) Climate control mode
6) Air inlet selection
7) Customizable icon
8) Set temperature indicator (right-hand side)
9) Seat heater/seat ventilation indicator*1 (right-hand side)
10) Fan speed indicator
11) Seat heater/seat ventilation indicator*1 (left-hand side)

*1: If equipped

When operating the climate control system, the main screen switches to the climate control screen. For details, refer to "Climate Control Panel" ☞P273.

▼ Main screen

To display the main screen, touch (HOME).

In this Owner's Manual, the following settings will be explained. For details about other items, refer to the separate navigation/audio Owner's Manual.

– "Settings" → "General"
– "Settings" → "Car"
– "Car Info"

▽ General settings

Set the time and display general items.

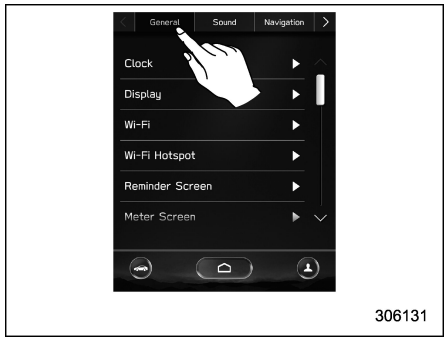

1. Touch (HOME).
2. → (Settings)
3. → "General"
4. Select the preferred menu.

– CONTINUED –

The setting adjustments to the following items can be manually changed to meet your personal requirements.

Item			Available settings	Page reference for the vehicle system operation	Page reference for the setting procedure
1st menu	2nd menu	3rd menu			
General	Clock	Time Setting*1	Auto/Manual	239	239
		Time Setting*2	Sync With DCM (Data Communication Module in vehicle cellular connection)/Manual		239
		Time Zone*1	AUTO/Pacific/Mountain/Central/Eastern/Atlantic/Newfoundland/Hawaii/Alaska		220
		Daylight Saving Time*1	AUTO/ON (+1 hour)/OFF		220
		Clock Format	12H/24H		220
	Display	Display Off	Turn the screen on or off.	—	220
		Brightness Dial	ON/OFF	173	220
		Brightness/Contrast	Set and adjust the brightness and contrast of the display.	220	220
	Wi-Fi	Wi-Fi	ON/OFF	*4	—
		Connected to:	Select the registered devise.		
		Available Wi-Fi Networks	Add		
		Wi-Fi Protected Setup	PIN Setup/Push Button Setup		
		Registered Wi-Fi Networks	—		
	Wi-Fi Hotspot	—	ON/OFF	*5	

Item			Available settings	Page reference for the vehicle system operation	Page reference for the setting procedure
1st menu	2nd menu	3rd menu			
General	Reminder Screen	Maintenance	ON/OFF	206	220
		Birthday	ON/OFF		220
		Anniversary	ON/OFF		220
	Meter Screen	Gauge Initial Movement	ON/OFF	171	220
		Meter Information Screen	Eco Gauge/OUT TEMP/Clock/Compass*2/Gas Range	199	220
		Turn by Turn Screen Interruption*1	ON/OFF	201	220
	Camera	Rear Camera Delay Control	ON/OFF	370	220
		Steering Angle Lines	ON/OFF	372	220
	Climate Control	Customize Climate Button	A/C/MAX A/C/AUTO/Recirculation	281	220
	Language	—	English/Français/Español	197 and 205	220
	Tire Pressure Units*3	—	kPa/PSi	201	220
	Home Screen Shortcuts	—	ON/OFF	*4	220
	Welcome Screen	—	ON/OFF	198	220
	Goodbye Screen	—	ON/OFF	198	220
	Favorite Widgets	—	Set a favorite widget from the list.	207	221
	Birthday List	—	Set a birthday.	206	221
	Anniversary List	—	Set an anniversary day.	206	222

– CONTINUED –

Item			Available settings	Page reference for the vehicle system operation	Page reference for the setting procedure
1st menu	2nd menu	3rd menu			
General	Periodic Rest Notification*1	—	ON/OFF	*4	—
	Software Update	Update	Check if a new software update		
		Automatically Check for Updates	ON/OFF		
		Automatically Download Updates	ON/OFF		
	STARLINK Apps Recovery	—	OK/Cancel		
	STARLINK Auto Connect	—	ON/OFF		
	Factory Data Reset	—	Reset/Cancel		
	System Information	—	—		
	Free/Open Source Software Information	—	—		

*1: Models with navigation system
*2: Models without navigation system
*3: If equipped
*4: For details about the audio and navigation system, refer to the Owner's Manual supplement for the audio and navigation system.
*5: For details, refer to the Owner's Manual supplement for SUBARU STARLINK Safety and Security.

NOTE

Touch ⓘ to display the explanation of the items.

▽ Car settings

Perform the EyeSight system setting and vehicle setting.

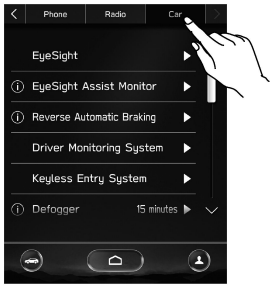

306132

1. Touch (HOME).
2. → (Settings)
3. → “Car”
4. Select the preferred menu.

– CONTINUED –

The setting adjustments to the following items can be manually changed to meet your personal requirements.

Item			Available settings	Page reference for the vehicle system operation	Page reference for the setting procedure
1st menu	2nd menu	3rd menu			
Car	EyeSight	Pre-Collision Braking	Setting ON/Setting OFF	Refer to the Owner's Manual supplement for the EyeSight system.	—
		Lane Departure Prevention Function	All Functions/Lane Departure Prevention Function Only/ Warning Buzzer Only/OFF		
		Cruise Control Acceleration Characteristics	Lv.1 (Eco)/Lv.2 (Comfort)/Lv.3 (Standard)/Lv.4 (Dynamic)		
		Select Drive on Left/Drive on Right	Right Lane/Left Lane		
		Lead Vehicle Acquisition Sound	ON/OFF		
		Lead Vehicle Moving Monitor	ON/OFF		
	EyeSight Assist Monitor	Red indicator	ON/OFF		
		Yellow Indicator	ON/OFF		
		Green Indicator	ON/OFF		
	Reverse Automatic Braking*1	Sonar Audible Alarm	ON/OFF	383	220

Item			Available settings	Page reference for the vehicle system operation	Page reference for the setting procedure
1st menu	2nd menu	3rd menu			
Car	Driver Monitoring System*1	Driver Monitoring System	ON/OFF	394	220
		Repeat Facial Scan	Perform the user recognition.		222
		User Recognition	ON/OFF		220
		Automatically Retract Seat on Entry	ON/OFF		220
		Register User	Register the user.		222
		Update Seat and Mirror Position	Re-register the driver's position.		222
		Delete Driver Position	Delete the registered driver's position.		222
		Delete User	Delete the registered user.		222
		Delete All Users	Delete all registered users.		222
	Keyless Entry System	Audible Signal*1*2	ON/OFF	128 and 133	220
		Hazard Warning Flasher	ON/OFF	128 and 134	220
		Driver Door Unlock*1	Driver Door Only/All	122	220
		Rear Gate/Trunk Unlock*1	Rear Gate/Trunk Only/All	122	220

– CONTINUED –

Item			Available settings	Page reference for the vehicle system operation	Page reference for the setting procedure
1st menu	2nd menu	3rd menu			
Car	Defogger	—	15 minutes/Continuous	254	220
	Interior Light	—	10 seconds/20 seconds/30 seconds/OFF	297	220
	Auto Light Sensor	Light Sensitivity	Min/Low/Mid/Max	242	220
		Wiper Link	ON/OFF	242	220
	Welcome Lighting	Approaching Time Set	30 seconds/60 seconds/90 seconds/OFF	243	220
		Leaving Time Set	30 seconds/60 seconds/90 seconds/OFF		220
	One-Touch Lane Changer	—	ON/OFF	250	220
	Auto Door Lock/Unlock	Auto Door Lock	Vehicle Speed/Shift into or out of PARK.*1/OFF	138	220
		Auto Door Unlock	Ignition OFF/Driver Door Open/Shift into or out of PARK.*1/OFF		220
	Door Mirror Setting*1	Auto Electric Folding	ON/OFF	266	220
		Reverse Tilt	ON/OFF	264	220
	Power Rear Gate*1	Power Rear Gate Memory	ON/OFF	154	220
	Vehicle Dynamics Control	—	ON/OFF	349	220
	Auto Vehicle Hold (AVH)	—	ON/OFF	357	220

Item			Available settings	Page reference for the vehicle system operation	Page reference for the setting procedure
1st menu	2nd menu	3rd menu			
Car	Auto Start Stop	—	ON/OFF	364	220
	BSD/RCTA*1	—	ON/OFF	379	220
	X-MODE*1	—	Models with 1 mode: ON/OFF Models with 2 modes: Normal, Snow/Dirt, Deep Snow/Mud	351	220
	Steering Responsive Headlights (SRH)*1	—	ON/OFF	248	220
	Warning Volume	—	Min/Mid/Max	378, 392 and *3	220
	Units	—	km, km/h, Liter/ Miles, MPH, Gallon	171 and 197	220

*1: If equipped
*2: This setting also works as the On/Off setting of the power rear gate buzzer for starting operation.
However, you cannot change the warning buzzer setting for a detecting jam, etc.
*3: For details about EyeSight system, refer to the Owner's Manual supplement for the EyeSight system.

NOTE

Touch ⓘ to display the explanation of the items.

– CONTINUED –

▼ How to select items on the screen

▽ ON/OFF setting

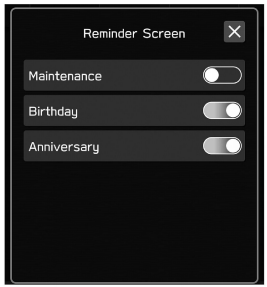

306133

Example

Touch the changing menu and select ON or OFF.

▽ Selecting

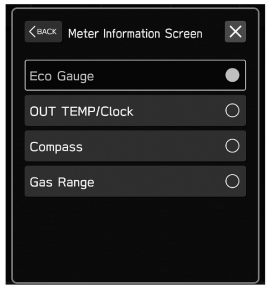

306134

Example

Touch the preferred item.

▼ How to set items on the screen

▽ Brightness/Contrast

Set and adjust the brightness and contrast of the center information display.

NOTE

"Brightness" can only be adjusted when "Brightness Dial" is off. Refer to "General settings" ☞P211.

1. Touch (HOME).
2. → (Settings)
3. → "General"
4. → "Display"
5. → "Brightness/Contrast"

306135

6. Drag ● to adjust the brightness and contrast.

Touch “Default” to revert to the factory setting.

▽ Favorite Widgets

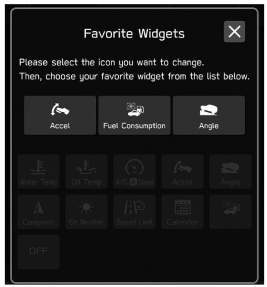

306136

The menu on the favorite screen can be customized.

1. Touch ⌂ (HOME).
2. → ⚙ (Settings)
3. → “General”
4. → “Favorite Widgets”
5. Select the icon of the display position.
6. Select the display item.

▽ Birthday List

If a birthday or anniversary is approaching, a message will be shown when the ignition switch is turned to the “ON” position. This function can be set to on or off by “Reminder Screen”. For details, refer to “General settings” ☞P211.

1. Touch ⌂ (HOME).
2. → ⚙ (Settings)
3. → “General”
4. → “Birthday List”

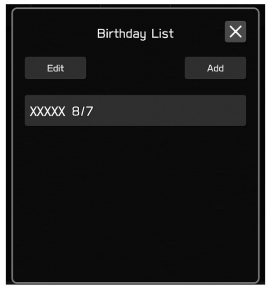

306137

5. → “Add”

306138

6. Enter the name.
7. → “Next”.

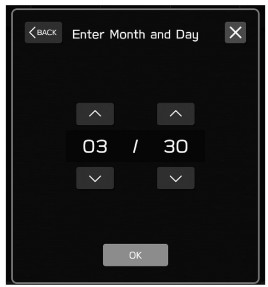

306139

8. Enter the date.
9. → “OK”

– CONTINUED –

NOTE

A maximum of 5 birthdays can be stored.

▽ Anniversary List

The procedure for setting an anniversary is the same as “Birthday List” ☞P221, except that in step 4 “Anniversary List” is selected.

▽ Driver Monitoring System (if equipped)

The Driver Monitoring System settings can be changed.

For setting method for the following menu on the Driver Monitoring System, refer to the “ON/OFF setting” ☞P220.

- Driver Monitoring System
- User Recognition
- Auto Retract Seat on Entry

Repeat facial scan:

1. Touch ⌂ (HOME).
2. → ⚙ (Settings)
3. → “Car”
4. → “Driver Monitoring System”
5. → “Repeat facial scan”

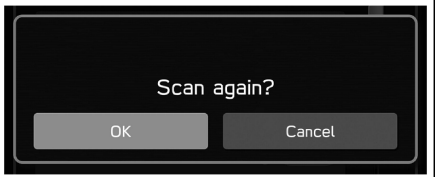

306140

6. → “OK”
7. While seated in the driver’s seat, face forward and wait for a few moments. When the scan is completed, the completion screen is displayed on the combination meter (color LCD).

Register User:

1. Adjust the seat position, outside mirror angle, and reverse tilt-down outside mirror angle so that you are seated in the correct driving posture.
2. Touch ⌂ (HOME).
3. → ⚙ (Settings)
4. → “Car”
5. → “Driver Monitoring System”
6. → “Register User”

306141

7. Select the preferred user from the list.

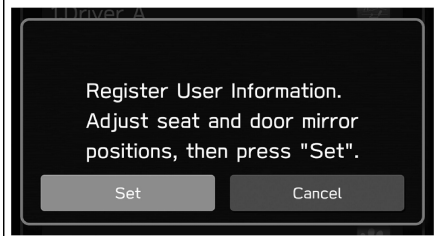

306142

8. → “Set”
9. While seated in the driver’s seat, face forward and wait for a few moments.

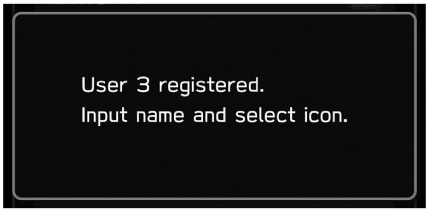

306143

When the screen changes, the registration of the facial scan is completed.

NOTE

- **If the screen does not change, turn your face to look alternately at the center information display and forward from the driver's seat to make recognition easier.**
- **If "Unable to register. Try again." appears, repeat the procedure beginning from step 5.**

306138

10. Enter the name.
11. → "Next"

306144

12. Select the preferred icon.
13. → "Set"

NOTE

- **An existing user can be overwritten by selecting a registered number. When a user is registered by overwriting, the individual fuel economy data is reset.**
- **When "User Recognition" is set to OFF, user registration cannot be selected.**

– CONTINUED –

Update Seat and Mirror Position:

1. Touch (HOME).
2. → (Settings)
3. → “Car”
4. → “Driver Monitoring System”
5. → “Update Seat and Mirror Position”

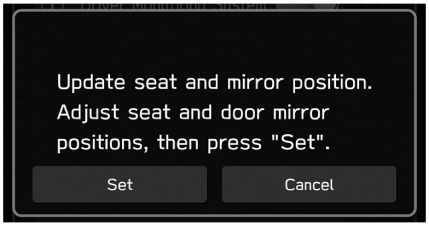

306145

6. → “Set”

Delete Driver Position:

1. Touch (HOME).
2. → (Settings)
3. → “Car”
4. → “Driver Monitoring System”
5. → “Delete Driver Position”

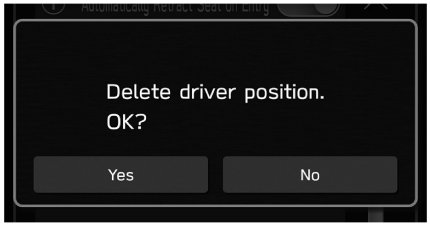

306146

6. → “Yes”

Delete User:

1. Touch (HOME).
2. → (Settings)
3. → “Car”
4. → “Driver Monitoring System”
5. → “Delete User”

306147

6. Select the preferred user from the list.

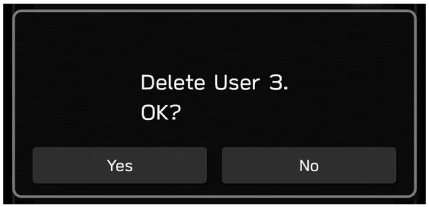

306148

7. → “Yes”

Delete All Users:

1. Touch (HOME).
2. → (Settings)
3. → “Car”
4. → “Driver Monitoring System”
5. → “Delete All Users”

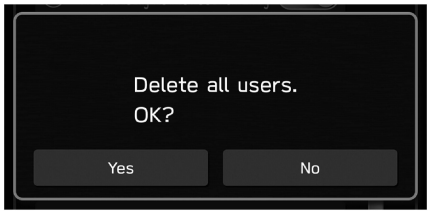

306149

6. → “Yes”

▼ Car information screen

1. Touch (HOME) to display the top menu.

306205

2. → (Car Info)

– CONTINUED –

▽ **Driving Statistics screen**

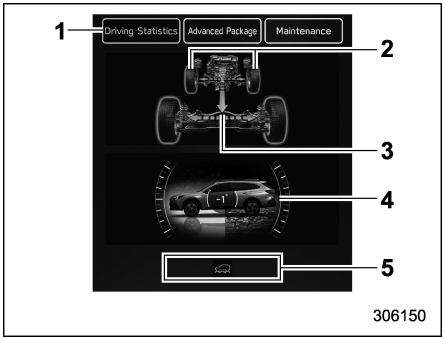

1) Driving Statistics
2) Steering angle
3) Running condition
4) Vehicle posture
5) Telltale screen

This screen displays the driving status of the vehicle and the operation status functions. For functions that are operating, the indicator will illuminate or flash.

NOTE

- **The vehicle posture indication may differ from the actual vehicle posture.**
- **For Outback, when X-MODE has been turned on, the screen of the center information display will be changed to the X-MODE screen.**
- **The vehicle posture angle varies not only due to the angle of the road surface, but also due to the vehicle tilt caused by the occupants, cargo, and acceleration or deceleration.**

▽ **Advanced Package screen**

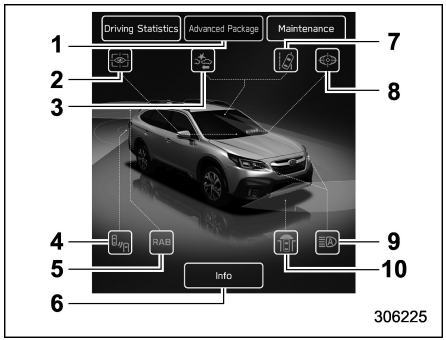

1) Advanced Package
2) Driver Monitoring System
3) Pre-Collision Braking
4) BSD/RCTA*1
5) Reverse Automatic Braking (RAB)*1
6) Information icon
7) Lane Departure Warning
8) EyeSight Assist Monitor
9) High beam assist
10) Front view monitor*1

*1: If equipped

This screen displays the advanced safety functions status of the vehicle.

Touch “Advanced Package” from the 2nd menu in the car info screen.

The advanced safety functions information can be shown on the screen. Touch the information icon on the screen.

NOTE

- **Indicators and icons are not displayed for functions that are not equipped to the vehicle.**
- **The indicators and icons of functions that are not operating are displayed in gray.**

▽ **Maintenance screen**

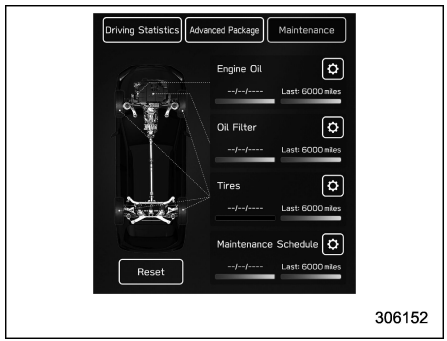

Maintenance reminders can be set.

Engine oil change reminder:

1. Touch “Maintenance” from the 2nd menu in the car info screen.

2. → ⚙ (Engine Oil)
3. Select “Notification Date” or “Notification Distance” of the reminder.
4. → “Set”
5. → ☒

Oil Filter change reminder:

The setting procedure is the same as the “Engine Oil” reminder, but touch the “Oil Filter” item in step 2.

Tires rotation reminder:

The setting procedure is the same as the “Engine Oil” reminder, but touch the “Tires” item in step 2.

Maintenance Schedule setting:

The setting procedure is the same as the “Engine Oil” reminder, but touch the “Maintenance Schedule” item in step 2.

NOTE

- **Touch “Reset” to reset each setting.**
- **Touch “Update” to revert to the default value.**

■ Dual 7.0-inch Display Models (If Equipped)

NOTE

For 11.6-inch display models, refer to “11.6-inch Display Models” ☞P206.

▼ Main screens

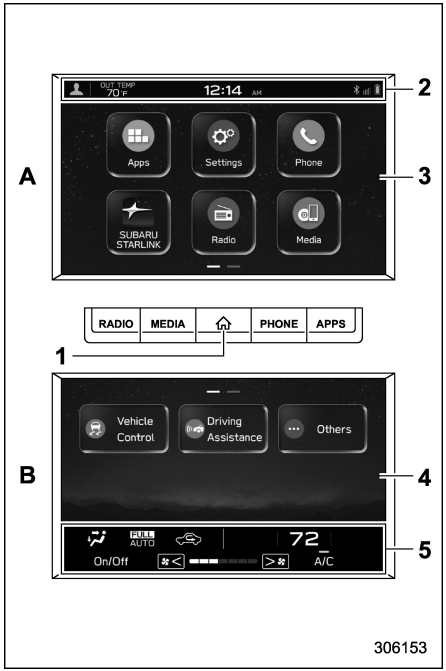

A) Upper display
B) Lower display
1) HOME button (Refer to “HOME button” ☞P227.)
2) Status bar (Refer to “Status bar” ☞P227.)
3) Upper main screen (Refer to “Setting of the upper display” ☞P228.)
4) Lower main screen (Refer to “Setting of the lower display” ☞P231.)
5) Climate control screen (Refer to “Climate control screen” ☞P228.)

While the ignition switch is in the “ACC” or “ON” position, the touch panel will activate.

▼ HOME button

Press ⌂ (HOME) to display the top menu.

▽ Status bar

The driver profiles icon, outside temperature and clock are shown on the display.

NOTE

- **The outside temperature indicator shows the temperature around the sensor. Therefore, the temperature indication may differ from the actual outside air temperature.**
- **The temperature unit cannot be changed.**
- **The clock can be shown in either 12-hour display or 24-hour display. For details about the setting, refer to “Clock” ☞P239.**

– CONTINUED –

▽ Upper display

For details about items, refer to “Setting of the upper display” ☞P228.

For details about the following menu, refer to the separate navigation/audio Owner’s Manual.

- Radio
- Media
- Phone
- Apps
- SUBARU STARLINK
- Add to Shortcuts

▽ Lower display

For details about the setting items, refer to “Setting of the lower display” ☞P231.

If this screen changes to the climate control screen, refer to “Dual 7.0-Inch Display Models” ☞P273.

▽ Climate control screen

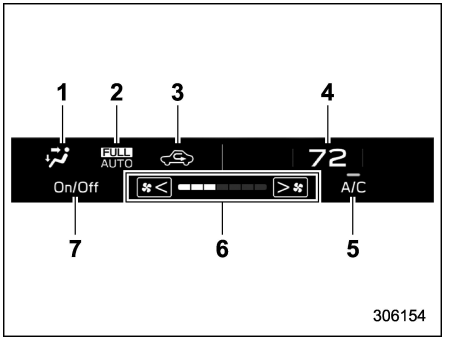

1) Airflow mode
2) Climate control mode
3) Air inlet selection
4) Set temperature indicator
5) Air conditioner ON indicator
6) Fan speed indicator
7) Climate control On/Off button

When operating the climate control system, the main screen switches to the climate control screen. For details about climate control operation, refer to “Climate Control Panel” ☞P273.

▼ Setting of the upper display

In this Owner’s Manual, the settings of the “General” menu will be explained. For details about other items, refer to the separate navigation/audio Owner’s Manual.

▽ General settings

The “General” menu is used to set the display, language and time.

1. Press ⌂ (HOME).

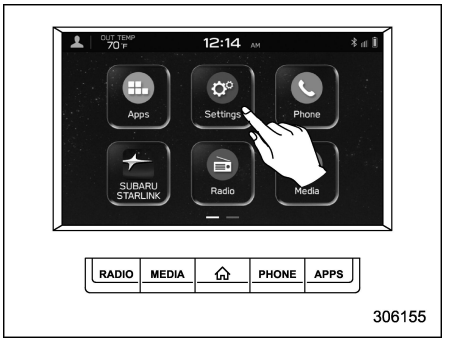

2. Touch ⚙ (Settings).
3. → “General”
4. Select the preferred menu.

The setting adjustments to the following items can be manually changed to meet your personal requirements.

Item			Available settings	Page reference for the vehicle system operation	Page reference for the setting procedure
1st menu	2nd menu	3rd menu			
General	Clock	Time setting	Sync With Phone/Manual	239	239
		Clock Format	12H/24H		240
	Display	Display Off	Turn the screen on or off.	—	236
		Brightness Dial	ON/OFF	—	236
		Brightness/Contrast	Set and adjust the brightness and contrast of the screen display and camera display.	—	236
	Reminder Screen	Maintenance	ON/OFF	206	236
		Birthday	ON/OFF		236
		Anniversary	ON/OFF		236
	Meter Screen	Gauge Initial Movement	ON/OFF	171	236
		Meter Information Screen	Eco Gauge/OUT TEMP/Clock/Gas Range	199	236
	Camera	Rear Camera Delay Control	ON/OFF	370	236
		Steering Angle Lines	ON/OFF	372	236

– CONTINUED –

Item			Available settings	Page reference for the vehicle system operation	Page reference for the setting procedure
1st menu	2nd menu	3rd menu			
General	Climate Control	Customize Climate Button	A/C/MAX A/C/AUTO/Recirculation	281	236
	Language	—	English/Français/Español	197 and 205	236
	Tire Pressure Units*1	—	kPa/PSi	201	236
	Home Screen Shortcuts	—	ON/OFF	*2	236
	Welcome Screen	—	ON/OFF	198	236
	Goodbye Screen	—	ON/OFF	198	236
	Birthday List	—	Set a birthday.	206	237
	Anniversary List	—	Set an anniversary day.	206	237
	STARLINK Apps Recovery	—	OK/Cancel	*2	—
	STARLINK Auto Connect	—	ON/OFF		
	Factory Date Reset	—	Reset/Cancel		
	System Information	—	—		
	Free/Open Source Software Information	—	—		

*1: If equipped
*2: For details about the audio and navigation system, refer to the Owner's Manual supplement for the audio and navigation system.

NOTE

Touch ⓘ to display the explanation of the items.

▼ Setting of the lower display

Touch (Car Settings). Refer to “Vehicle setting icons” ☞P233.

This screen displays the driving status of the vehicle and the operation status of the functions. Refer to “Driving Statistics” ☞P237.

Set the timing of the maintenance. Refer to “Maintenance” ☞P238.

▽ Vehicle settings while driving

306244

Touch (X-MODE), (Vehicle Control), (Driving Assistance), or (Others) to display the items that are changeable while driving.

– CONTINUED –

Item			Available settings	Page reference for the vehicle system operation	Page reference for the setting procedure
1st menu	2nd menu	3rd menu			
X-MODE*1	—	—	ON/OFF	351	236
Vehicle Control	Vehicle Dynamics Control	—	ON/OFF	349	236
	Auto Vehicle Hold (AVH)	—	ON/OFF	357	236
Driving Assistance	Pre-Collision Braking	—	Setting ON/Setting OFF	*2	—
	Lane Departure Prevention Function	—	All Functions/Lane Departure Prevention Function Only/ Warning Buzzer Only/OFF		
Others	Cruise Control Acceleration Characteristics	—	Lv.1 (Eco)/Lv.2 (Comfort)/Lv.3 (Standard)/Lv.4 (Dynamic)	*2	—
	Warning Volume	—	Min/Mid/Max	*2	236
	Units	—	km, km/h, Liter/ Miles, MPH, Gallon	171 and 197	236
	Auto Start Stop	—	ON/OFF	364	236

*1: For Outback
*2: For details about EyeSight system, refer to the Owner's Manual supplement for the EyeSight system.

▽ Vehicle setting icons

306156

1. Press (HOME).
2. Touch (Car Settings).

– CONTINUED –

The setting adjustments to the following items can be manually changed to meet your personal requirements.

Item			Available settings	Page reference for the vehicle system operation	Page reference for the setting procedure
1st menu	2nd menu	3rd menu			
Car Settings	EyeSight	Pre-Collision Braking	Setting ON/Setting OFF	*1	—
		Lane Departure Prevention Function	All Functions/Lane Departure Prevention Function Only/ Warning Buzzer Only/OFF	*1	—
		Cruise Control Acceleration Characteristics	Lv.1 (Eco)/Lv.2 (Comfort)/Lv.3 (Standard)/Lv.4 (Dynamic)	*1	—
		Select Drive on Left/Drive on Right	Right Lane/Left Lane	*1	—
		Lead Vehicle Acquisition Sound	ON/OFF	*1	236
		Lead Vehicle Moving Monitor	ON/OFF	*1	236
	EyeSight Assist Monitor	Red indicator	ON/OFF	*1	—
		Yellow Indicator	ON/OFF		
		Green Indicator	ON/OFF		
	Keyless Entry System	Hazard Warning Flasher	ON/OFF	134	236
	Defogger	—	15 minutes/Continuous	254	236
	Interior Light	—	10 seconds/20 seconds/30 seconds/OFF	297	236

Item			Available settings	Page reference for the vehicle system operation	Page reference for the setting procedure
1st menu	2nd menu	3rd menu			
Car Settings	Auto Light Sensor	Light Sensitivity	Min/Low/Mid/Max	242	236
		Wiper Link	ON/OFF	242	236
	Welcome Lighting	Approaching Time Set	30 seconds/60 seconds/90 seconds/OFF	243	236
		Leaving Time Set	30 seconds/60 seconds/90 seconds/OFF		236
	One-Touch Lane Changer	—	ON/OFF	250	236
	Auto Door Lock/Unlock	Auto Door Lock	Vehicle Speed/Shift into or out of PARK/OFF	138	236
		Auto Door Unlock	Ignition OFF/Driver Door Open/ Shift into or out of PARK/OFF		236
	Vehicle Dynamics Control	—	ON/OFF	349	236
	Auto Vehicle Hold (AVH)	—	ON/OFF	357	236
	Auto Start Stop	—	ON/OFF	364	236
	X-MODE*2	—	ON/OFF	351	236
	Warning Volume	—	Min/Mid/Max	*1	236
	Units	—	km, km/h, Liter/ Miles, MPH, Gallon	171 and 197	236

*1: For details about EyeSight system, refer to the Owner's Manual supplement for the EyeSight system.
*2: If equipped.

NOTE

Touch ⓘ to display the explanation of the items.

– CONTINUED –

▼ How to select items on the screen

▽ ON/OFF setting

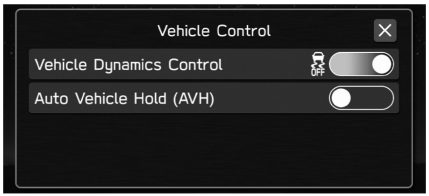

306157

Example

Touch the changing menu and select ON or OFF.

▽ Selecting

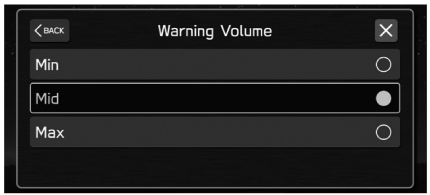

306158

Example

Touch the preferred setting.

▼ How to set items on the screen

▽ Brightness/Contrast

Set and adjust the brightness and contrast of the center information display.

NOTE

"Brightness" can only be adjusted when "Brightness Dial" is off. Refer to "General settings" ☞P228.

1. Touch (HOME).
2. → (Settings)
3. → "General"
4. → "Display"
5. → "Brightness/Contrast"

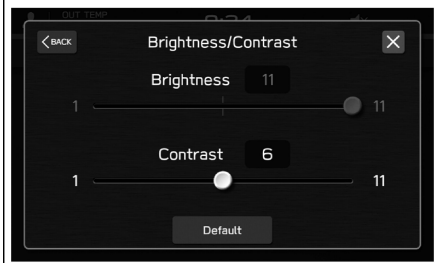

306159

6. Drag ● to adjust the brightness and contrast.

Touch “Default” to revert to the factory setting.

▽ Birthday List

If a birthday or anniversary is approaching, a message will be displayed when the ignition switch is turned to the “ON” position. This function can be set to on or off by the “Reminder Screen”. For details, refer to “General settings” ☞P228.

1. Touch ⌂ (HOME).
2. → ⚙ (Settings)
3. → “General”
4. → “Birthday List”

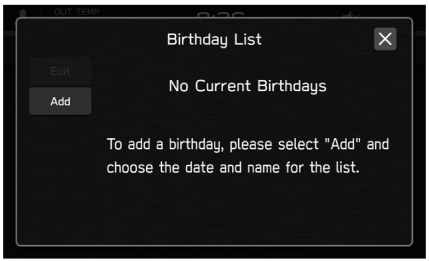

306160

5. → “Add”

306161

6. Enter the name.
7. → “Next”

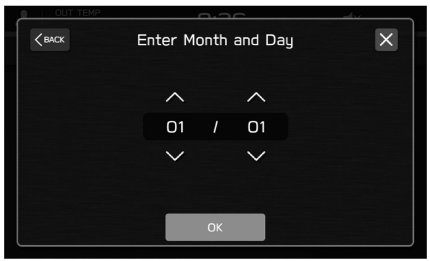

306162

8. Enter the date.
9. → “OK”

NOTE

A maximum of 5 birthdays can be stored.

▽ Anniversary List

The procedure for setting an anniversary is the same as “Birthday List” ☞P237, except that in step 4 “Anniversary List” is selected.

▼ Driving Statistics

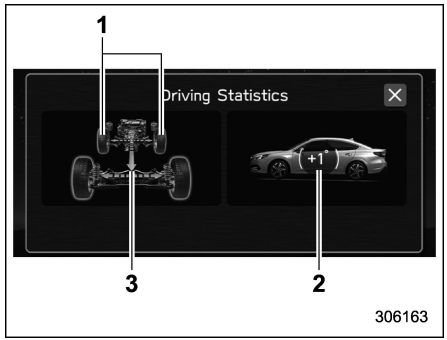

306163

1) Steering angle
2) Vehicle posture
3) Running condition

This screen displays the driving status of the vehicle and the operation status of the functions. For functions that are operating, the indicator will illuminate or flash.

– CONTINUED –

NOTE

- **The vehicle posture indication may differ from the actual vehicle posture.**
- **For Outback, when X-MODE has been turned on, the screen of the center information display will be changed to the X-MODE screen.**
- **The vehicle posture angle varies not only due to the angle of the road surface, but also due to the vehicle tilt caused by the occupants, cargo, and acceleration or deceleration.**

▼ Maintenance

306164

Maintenance reminders can be set.

Engine oil setting:

1. Touch (Maintenance).
2. → (Engine Oil)
3. Select “Notification Date” or “Notification Distance” of the reminder.
4. → “Set”
5. → ☒

Oil Filter setting:

The setting procedure is the same as “Engine Oil” setting, but touch the “Oil Filter” item in step 2.

Tires setting:

The setting procedure is the same as “Engine Oil” setting, but touch the “Tires” item in step 2.

Maintenance Schedule setting:

The setting procedure is the same as “Engine Oil” setting, but touch the “Maintenance Schedule” item in step 2.

NOTE

- **Touch “Reset” to reset each setting.**
- **Touch “Update” to revert to the default value.**

3-9. Clock

For models with a genuine SUBARU navigation and/or audio system, the clock can be adjusted using either auto mode or manual mode.

■ Setting the Clock Manually

▼ Dual 7.0-inch display models

1. Turn the ignition switch to the “ON” position.

306121

2. Press ⌂ (HOME).
3. Touch ⚙ (Settings).
4. → “General”
5. → “Clock”
6. → “Time Setting”

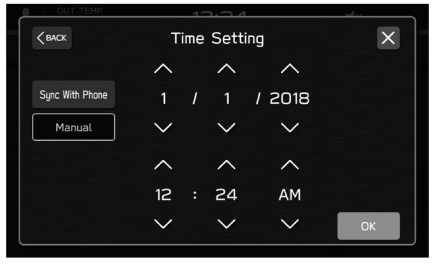

306122

7. → “Manual”
8. → ∧ or ∨
9. → “OK”

▼ 11.6-inch display models

1. Turn the ignition switch to the “ON” position.

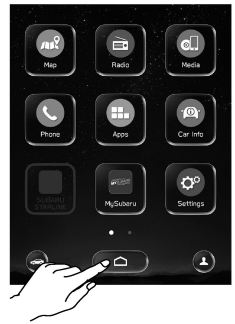

306123

2. Touch ⌂ (HOME).
3. → ⚙ (Settings)
4. → “General”
5. → “Clock”
6. → “Time Setting”

– CONTINUED –

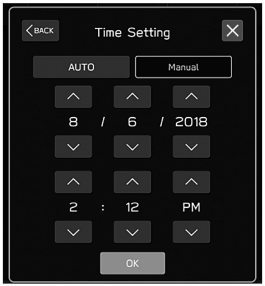

306124

7. → “Manual”
8. → ⋀ or ⋁
9. → “OK”

■ Setting the Clock Automatically

▼ Dual 7.0-inch display models

1. Turn the ignition switch to the “ON” position.

306121

2. Press ⌂ (HOME).
3. Touch ⚙ (Settings).
4. → “General”
5. → “Clock”
6. → “Time Setting”

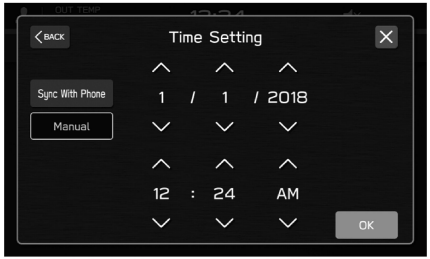

306122

7. → “Sync With Phone”

The clock will be set and adjusted automatically when a smartphone is connected via Bluetooth® for transferring phonebook data.

1. Register the smartphone to the audio system. For details, refer to “Bluetooth SETTINGS” in the supplemental Owner’s Manual for the audio/navigation system.
2. Transfer phonebook data to the system. For details, refer to “Bluetooth SETTINGS” in the supplemental Owner’s Manual for the audio/navigation system. The clock will be adjusted automatically.

NOTE

Depending on the model of smartphone, the settings of the connected

smartphone may need to be changed. (ex: For iOS or other models, notification settings may need to be activated.) For details, check the instructions on connecting smartphones.

▼ **11.6-inch display models**

1. Turn the ignition switch to the “ON” position.

306123

2. Touch (HOME).
3. → (Settings)
4. → “General”
5. → “Clock”
6. → “Time Setting”
7. Models with navigation system:
   → “Auto”
   Models without navigation system:
   → “Sync With DCM (Data Communication Module in vehicle cellular connection)”

▽ **Models with navigation system**

The clock will be set automatically where a GPS signal is available.

▽ **Models without navigation system**

The clock will be set automatically where a DCM (Data Communication Module in vehicle cellular connection) signal is available.

3-10. Light Control Switch

CAUTION

- **Use of any lights for a long period of time while the engine is not running can cause the battery to discharge.**
- **Before leaving the vehicle, make sure that the light control switch is turned to the off position. If the vehicle is left unattended for a long time with the light control switch set to a position other than the off position, the battery may be discharged.**

Models with “keyless access with push-button start system”:

The light control switch operates when the push-button ignition switch is in the “ACC” or “ON” position.

Regardless of the position of the light control switch, the illuminated lights are turned off when the push-button ignition switch is turned off.

Models without “keyless access with push-button start system”:

The light control switch operates when the key is inserted in the ignition switch.

– CONTINUED –

Regardless of the position of the light control switch, the illuminated lights are turned off when the key is removed from the ignition switch.

NOTE

The light control switch can be operated (except auto on/off headlights), even under the following conditions.

- **When the push-button ignition switch is turned off (models with "keyless access with push-button start system")**
- **When the key is not inserted into the ignition switch (models without "keyless access with push-button start system")**

If the driver's door is opened while the headlights are illuminated under such conditions, a chirp sound will inform the driver that the lights are illuminated.

■ Headlights

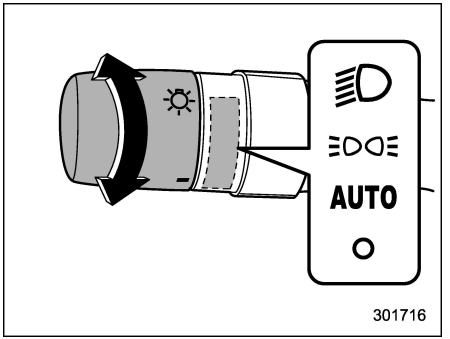

To turn on the headlights, turn the knob on the end of the light control switch.

"O" position:
The headlights are all off.

"≣D" position:
Instrument panel illumination, headlights, parking lights, front side marker lights, rear side marker lights, tail lights and license plate lights are on.

"≣DC≣" position:
Instrument panel illumination, parking lights, front side marker lights, rear side marker lights, tail lights and license plate lights are on.

"AUTO" position: auto on/off headlights
When the ignition switch is in the "ON" position, the instrument panel illumination, headlights, parking lights, front side marker lights, rear side marker lights, tail lights and license plate lights are **automatically on or off** depending on the level of the ambient light.

The light sensitivity of the auto on/off headlights can be changed by operating the center information display. For details, refer to "Car settings" ☞P215 (11.6-inch display models) or "Vehicle setting icons" ☞P233 (dual 7.0-inch display models). Also, the setting can be changed by a SUBARU dealer. Consult your SUBARU dealer for details.

▼ Auto-on/off wiper-linked headlights

While the light control switch is in the "AUTO" position, the headlights will automatically turn on when the windshield wipers operate several times. The headlights will automatically turn off approximately 1 minute after the wiper stops.

The ON/OFF setting of this function can be changed by operating the center information display. For details, refer to "Car settings" ☞P215 (11.6-inch display models) or "Vehicle setting icons" ☞P233 (dual 7.0-inch display models). Also, the setting

can be changed by a SUBARU dealer. Consult your SUBARU dealer for details.

▼ Welcome lighting function

The welcome lighting function turns on the low beam headlight for smooth approaching to or exiting from the vehicle at night or in a dark place.

The function is activated while all of the following conditions are met.

- The light control switch is in the “AUTO” position
- It is dark enough to turn on the auto on/off headlights

▽ When approaching

While the welcome lighting function is activated, the low beam headlights will automatically illuminate when unlocking the doors (for Outback, including the rear gate) by using the remote keyless entry system.

The low beam headlights will remain illuminated for 30 seconds*1 and then turn off. However, if any of the following operations is done, the low beam headlights will turn off.

- The doors are locked.
- The light control switch is turned to a position other than “AUTO”.

▽ When exiting

While the welcome lighting function is activated, the low beam headlights will remain illuminated even when either of the following operation is done.

- The push-button ignition switch is turned to the “OFF” status (models with “keyless access with push-button start system”)
- The key is pulled out from the ignition switch (models without “keyless access with push-button start system”)

The low beam headlights will turn off under any of the following conditions.

- 3 minutes have passed since the low beam headlights were illuminated by the welcome lighting function.
- 30 seconds have passed since the door is opened and closed.*1
- The light control switch is turned to a position other than “AUTO”.
- The locking procedure is performed twice. When performing the unlocking procedure after performing the locking procedure, perform the locking procedure twice again.

*1: The setting for the period of time in which the low beam headlights remain on by the welcome lighting function can be changed by a SUBARU dealer. Contact your SUBARU dealer for details. Also, you can change the setting by operating the center information display. For details, refer to “Car settings” ☞P215 (11.6-inch display models) or “Vehicle setting icons” ☞P233 (dual 7.0-inch display models).

▼ Sensor for the auto on/off headlights

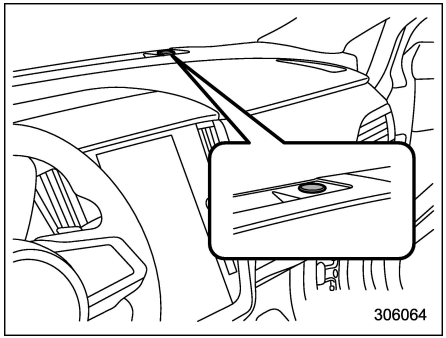

The sensor is on the instrument panel as shown in the illustration.

– CONTINUED –

CAUTION

If any object is placed on or near the sensor, the sensor may not detect the level of the ambient light correctly and the auto on/off headlights may not operate properly.

■ High/Low Beam Change (Dimmer)

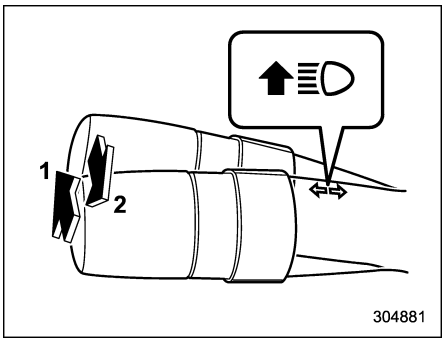

1) High beam
2) Low beam

While the light control switch is in the "", "", or "AUTO" position in a dark place, the headlights will turn on.

When the headlights are on high beam, the high beam indicator light "" on the combination meter is also on.

NOTE

While the light control switch is in the "AUTO" position and the lever is the high beam position, the high beam assist function will be on standby.

■ Headlight Flasher

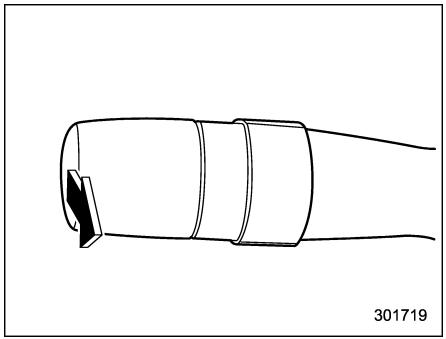

CAUTION

Do not hold the lever in the flashing position for more than just a few seconds.

To flash the headlights, pull the lever toward you and then release it. The high beam will stay on for as long as you hold the lever. The headlight flasher works even though the lighting switch is in the off position.

When the headlights are on high beam, the high beam indicator light "" on the combination meter also illuminates.

■ High Beam Assist Function

NOTE

- **The high beam assist function utilizes the stereo camera installed at the position of the front map lights.**
- **For details on how to handle the stereo camera, refer to the Owner's Manual supplement for the EyeSight system.**

The high beam assist function automatically changes the headlight from high beam to low beam (or vice versa).

When all of the following conditions are met, the headlight will change to high beam.

- When the vehicle speed increases to or above 20 mph (32 km/h).
- There is no preceding or oncoming vehicle.
- The forward area of the vehicle is dark.
- The road does not have a sharp curve.

When any of the following conditions are

met, the headlight will change to low beam.

- When the vehicle speed decreases to or below 10 mph (16 km/h).
- When the forward area of the vehicle is bright.
- When there is a preceding or oncoming vehicle.
- When the EyeSight system is malfunctioning or is temporarily stopped.

NOTE

- **Do not overestimate the capacity of the high beam assist function. The driver always has the responsibility to understand the surrounding situation, to drive safely, and to change the headlight mode manually if necessary.**
- **The factory setting (default setting) for this function is set as "operational". This setting can be changed to OFF (non-operation) at SUBARU dealers. For more details, contact a SUBARU dealer.**

▼ How to use the high beam assist function

The high beam assist function will be activated when all the following conditions are met.

- The light control switch is in the "AUTO" position and the low beam headlights are on automatically.
- The turn signal lever is pushed forward.

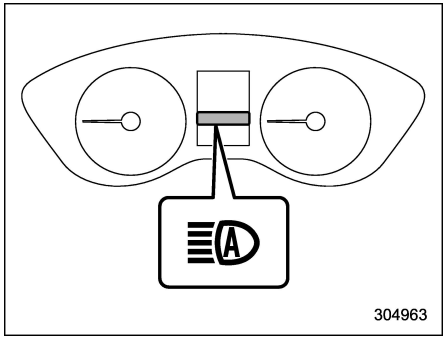

High beam assist indicator

When the high beam assist function is activated, the high beam assist indicator on the combination meter will illuminate.

NOTE

If the high beam assist function is malfunctioning or is temporarily stopped, the headlight will be fixed at low beam.

▼ Temporary stop of high beam assist function

If the high beam assist function stops temporarily due to poor visibility or abnormal temperature, the message appears on the combination meter. Once the conditions have been remedied, drive the vehicle for a while to restore the system.

NOTE

Even when the operation conditions of the high beam assist function are met, there may be a case in which the high beam assist indicator does not illuminate.

▼ How to temporarily lower the sensitivity of the high beam assist function

The sensitivity of the high beam assist function can be lowered by using the following operations.

1. Before turning the ignition switch to the "ON" position, set the light control switch to the "AUTO" position and push the signal lever forward (high beam position).
2. Turn the ignition switch to the "ON" position and within approximately 15 seconds, press the "/ / " (following distance setting) switch more than 10 times consecutively.

When the sensitivity of the high beam assist function is lowered, the high beam assist indicator light "" on the combination meter display (color LCD) will flash.

– CONTINUED –

NOTE

● The sensitivity of the high beam assist function cannot be lowered in the following conditions.

– Cruise control or Adaptive Cruise Control indicator is illuminated.

– The EyeSight warning indicator (yellow) is illuminated

● The sensitivity of the high beam assist function returns to normal level the next time the ignition switch is turned to the "LOCK"/"OFF" position and the engine is restarted.

▼ How to change the headlight mode manually

Change to the low beam:

When you return the turn signal lever to the center position, the high beam assist function will turn off and the high beam assist indicator will turn off.

Change to the high beam:

When you turn the light control switch to the "≡D" position, the headlight mode will be changed to the high beam.

At this time, the high beam assist function will turn off, the high beam assist indicator will turn off and the high beam indicator light will turn on.

NOTE

● After manually changing the headlight mode to the high beam, if you turn on the high beam assist function, return the light control switch to the "AUTO" position.

● When manually changing the headlight mode to the high beam, if you turn the light control switch to the "≡DOE" position, the parking lights, front side marker lights, rear side marker lights, tail lights and license plate lights will turn on.

▼ Tips for the high beam assist system

● The high beam assist function recognizes the condition surrounding the vehicle based on the brightness of illumination ahead of your vehicle, etc. Therefore, the headlight mode may switch in some situations that do not match to the driver's sense.

● A bicycle or cargo cycle may not be detected.

● Under the following situations, the brightness of ambient illumination may not be detected correctly and the high beam assist function may not work properly. As a result, the glare of the high beam may disturb the oncoming vehicle or vehicle ahead. Also, the low beam mode may continue although there are no oncoming vehicles and vehicles ahead. In the such cases, change the headlight mode manually.

– In bad weather (fog, snow, sand storm, heavy rain, etc.).

– When the windshield glass is dirty or fogged.

– When the windshield is cracked or damaged.

– If there are lights similar to the headlights or the tail lights in the surrounding area.

– When an oncoming vehicle or vehicle ahead is driven without its headlights and tail lights on.

– If the headlights of an oncoming vehicle or the tail lights of a vehicle ahead are dirty or discolored, or if the light beams are not aimed correctly.

– When a rapid change of brightness continues while driving.

– When driving on a road with many ups and downs or uneven surfaces.

– When driving on a road with many curves.

– When there are some objects that reflect light strongly, such as a road sign or a mirror in vehicle ahead.

– When the rear part of the vehicle ahead, such as a container, reflects light strongly.

– When the headlights of your vehicle are damaged or dirty.

– When your vehicle is tilted, such as in case the vehicle has a flat tire or is being towed.

– When the stereo camera is deformed or the stereo camera lenses are dirty.

– Immediately after the engine has started.

- In the following conditions, the headlight mode will not be automatically changed from the high beam to the low beam.

  – When your vehicle passes an oncoming vehicle suddenly in a blind curve.

  – When another vehicle passes in front of your vehicle.

  – When an oncoming vehicle or vehicle ahead comes in and out of view because of continuous curves, median strips, roadside trees, etc.

- If the stereo camera detects the light of the front fog lights of an oncoming vehicle, the headlight mode may change from the high beam to the low beam automatically.

- The headlight mode may change from the high beam to the low beam, or the low beam mode may continue, when affected by a street light, traffic signal, illumination of an advertisement board, or a reflective object such as a road sign and signboard.

- The timing of the change of headlight mode may differ due to the following factors.

  – Color or brightness of the headlights of an oncoming vehicle or the tail lights of a vehicle ahead.

  – The headlights of the oncoming vehicle or the tail lights of the vehicle ahead are covered with mud, snow, etc.

  – Movement and direction of an oncoming vehicle or a vehicle ahead.

  – When the headlights of an oncoming vehicle or the tail lights of a vehicle ahead illuminate on only one side.

  – When the oncoming vehicle or vehicle ahead is a motorcycle.

  – Conditions of a road (slope, curve, road surface, etc.).

  – Number of passengers and weight of loaded cargo.

  – Limitation of the detection ability of the stereo camera.

■ Daytime Running Light System

⚠ WARNING

When the daytime running lights are illuminated, the tail lights do not illuminate. When it becomes dark outside, turn the light switch to the "≡D" position to illuminate the headlights and tail lights. This will improve visibility and allow other drivers to see your vehicle more easily.

The daytime running lights will automatically illuminate when the following conditions are fulfilled.

- The engine is running.
- The parking brake is fully released.
- The light control switch is in the "AUTO", "≡DOE" or off position.
- The select lever is in a position other than the "P" position.

NOTE

When the light switch is in the "≡DOE" position, the instrument panel illumination, front side marker lights, tail lights and license plate lights are also illuminated.

3-11. Steering Responsive Headlight (SRH) (If Equipped)

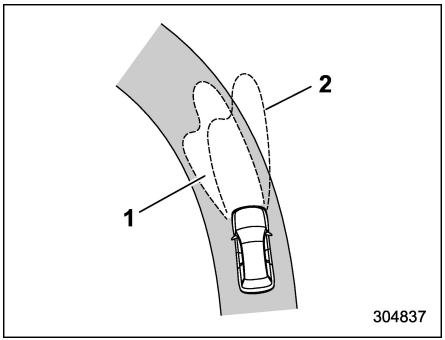

1) The target area of illumination when SRH is activated
2) The target area of illumination when SRH is not activated

SRH is a function that automatically moves the headlight beam to the left or right in accordance with the steering angle. This function helps to improve the visibility at night by illuminating the road ahead at corners and intersections.

You can turn the SRH function on or off. The settings can be changed by using the center information display. For details, refer to “Car settings” ☞P215.

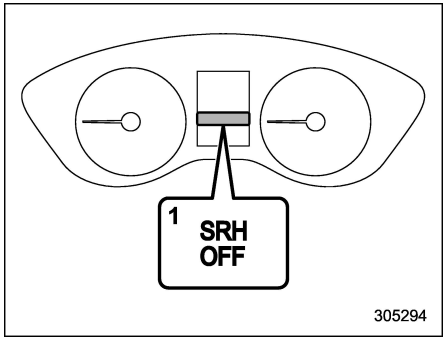

1) SRH OFF indicator

The SRH OFF indicator on the combination meter display (color LCD) turns off when SRH is turned on.

The SRH OFF indicator on the combination meter display (color LCD) illuminates when SRH is turned off.

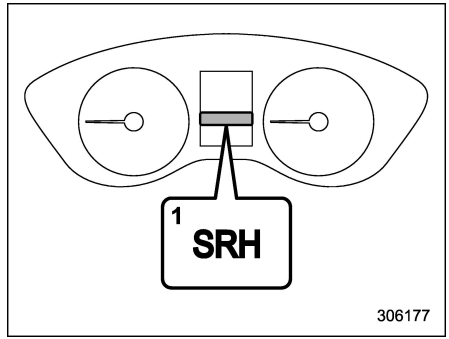

1) SRH warning indicator

If SRH is malfunctioning, the SRH warning indicator on the combination meter display (color LCD) illuminates and a message appears on the warning screen when the ignition switch is in the “ON” position. It indicates that SRH has been deactivated. Contact a SUBARU dealer for an inspection.

NOTE

- **The SRH function operative/non-operative status is kept when the engine is turned off, even if the engine is restarted.**
- **When you turn the ignition switch to the “ON” position, the SRH OFF indicator will illuminate and turn off after several seconds.**

- **SRH only activates when the vehicle is traveling forward at the speed of approximately 5 mph (8 km/h) or more.**

3-12. Headlight Beam Leveler (If Equipped)

The LED headlights produce more light than conventional halogen headlights.

When the vehicle is carrying a heavy load and the headlight beams are angled upwards, the driver of an oncoming vehicle may experience glare.

To prevent this, the automatic headlight beam leveler adjusts the headlights to the optimum height automatically depending on the load the vehicle is carrying.

CAUTION

In certain circumstances, the headlights may become misaligned, and the headlight beam leveler will not reset them to the proper angle. This may occur after transporting your vehicle on a flat-bed truck, or if the vehicle is parked and restarted on different angles. In such cases, have the headlight alignment checked by a SUBARU dealer.

3-13. Front Fog Light Switch (If Equipped)

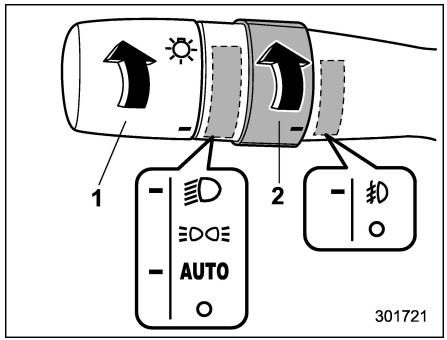

1) Headlight switch
2) Fog light switch

To turn on the front fog lights:

Turn the fog light switch to the "" position while the headlights are in either of the following conditions.

- The headlight switch is in the "" position with the low beam mode selected.
- The headlight switch is in the "AUTO" position and the low beam headlights turn on automatically.

To turn off the front fog lights:

Turn the fog light switch back down to the "O" position.

– CONTINUED –

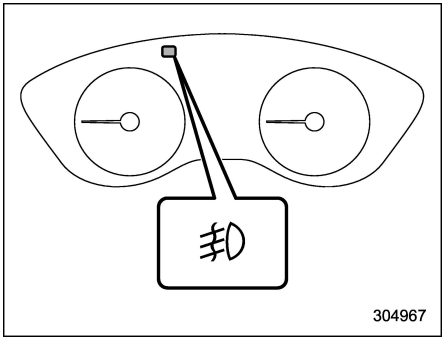

Indicator light

The indicator light located on the combination meter will illuminate when the front fog lights are on.

3-14. Turn Signal Lever

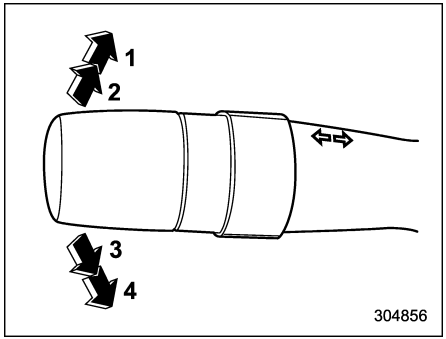

1) Right turn
2) Lane change right signal
3) Lane change left signal
4) Left turn

If the lever does not return after cornering, return the lever to the neutral position by hand.

To signal a lane change, push the turn signal lever up or down slightly and hold it during the lane change. The lever will return automatically to the neutral position when you release it.

■ One-Touch Lane Changer

To flash the turn signal and turn signal indicator light three times, push the turn signal lever up or down slightly and immediately release it.

NOTE

The operational/non-operational setting of the one-touch lane changer can be changed by a SUBARU dealer. Contact the nearest SUBARU dealer for details. The setting can also be changed by operating the center information display. For details, refer to "Car settings" ☞P215 (11.6-inch display models) or "Vehicle setting icons" ☞P233 (dual 7.0-inch display models).

3-15. Wiper and Washer

WARNING

In freezing weather, do not use the windshield washer until the windshield is sufficiently warmed by the defroster.

Otherwise the washer fluid can freeze on the windshield, blocking your view.

CAUTION

- **Do not operate the washer continuously for more than 10 seconds, or when the washer fluid tank is empty. This may cause overheating of the washer motor. Check the washer fluid level frequently, such as at fuel stops.**
- **Do not operate the wipers when the windshield or rear window is dry. This may scratch the glass, damage the blade rubbers and might cause the wiper motor to fail. Before operating the wiper on a dry windshield or rear window, always use the windshield washer.**
- **In freezing weather, be sure that the blade rubbers are not frozen to the windshield or rear window before switching on the wipers. Attempting to operate the wiper with the blade rubbers frozen to the window glass could cause not only the blade rubbers to be damaged but also might cause the wiper motor to fail. If the blade rubbers are frozen to the window glass, be sure to operate the defroster, windshield wiper deicer (if equipped) or rear window defogger before turning on the wiper.**
- **If the wipers stop during operation because of ice or some other obstruction on the window, this might cause the wiper motor to fail even if the wiper switch is turned off. If this occurs, promptly stop the vehicle in a safe location, turn the ignition switch to the "LOCK"/"OFF" position and clean the window glass to allow proper wiper operation.**
- **Use clean water if windshield washer fluid is unavailable. In areas where water freezes in winter, use SUBARU Windshield Washer Fluid or the equivalent. Refer to "Windshield Washer Fluid" ☞P500.**

  Also, when driving the vehicle when there are freezing temperatures, use non-freezing type wiper blades.
- **Do not clean the wiper blades with gasoline or a solvent, such as paint thinner or benzine. This will cause deterioration of the wiper blades.**

NOTE

- **The windshield wiper motor is protected against overloads by a circuit breaker. If the motor operates continuously under an unusually heavy load, the circuit breaker may trip to stop the motor temporarily. If this happens, park your vehicle in a safe location, turn off the wiper switch, and wait for approximately 10 minutes. The circuit breaker will reset itself, and the wipers will again operate normally.**
- **Clean your blade rubbers and window glass periodically with a washer solution to prevent streaking, and to remove accumulations of road salt or road film. Operate the windshield washer for at least 1 second so that washer solution will be sprinkled all**

– CONTINUED –

over the windshield or rear window.

● Grease, wax, insects or other material on the windshield or the blade rubbers results in jerky wiper operation and streaking on the glass. If you cannot remove those streaks after operating the washer or if the wiper operation is jerky, clean the outer surface of the windshield or rear window and the blade rubbers using a sponge or soft cloth with a neutral detergent or mild abrasive cleaner. After cleaning, rinse the window glass and blade rubbers with clean water. The glass is clean if no beads form on the glass when you rinse with water.

● If you cannot eliminate the streaking even after following this procedure, replace the wiper blades (or blade rubbers) with new ones. For replacement instructions, refer to "Replacement of Wiper Blades" ☞P501.

■ Windshield Wiper and Washer Switches

The wiper operates only when the ignition switch is in the "ON" position.

▼ Windshield wipers

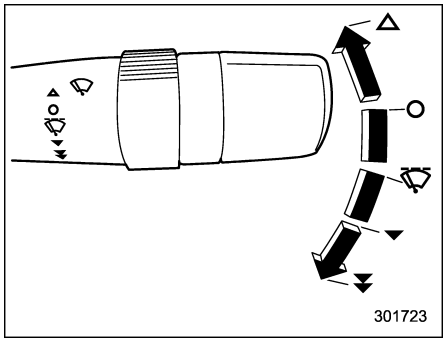

△ : Mist (for a single wipe)

○ : Off

: Intermittent

▼ : Low speed

▼▼ : High speed

To turn the wipers on, push the wiper control lever down.

To turn the wipers off, return the lever to the "○" position.

For a single wipe of the wipers, push the lever up. The wipers operate until you release the lever.

▼ Wiper intermittent time control

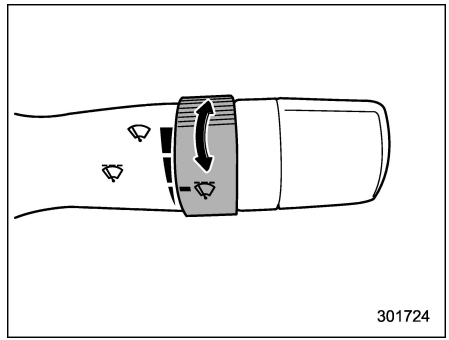

When the wiper switch is in the "" position, turn the dial to adjust the operating interval of the wiper. The operating interval can be adjusted in several steps from the shortest interval to the longest.

▼ Windshield washer

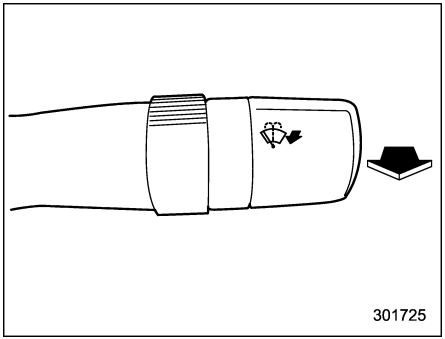

To wash the windshield, pull the wiper control lever toward you. The washer fluid sprays until you release the lever. The wipers operate while you pull the lever.

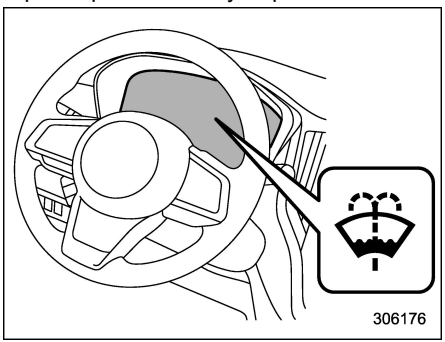

Windshield washer fluid warning light

NOTE

The windshield washer fluid warning light appears when the washer fluid level in the tank has dropped to the lower limit. If the warning light appears, refill the tank with fluid. For the tank refilling method, refer to "Windshield Washer Fluid" ☞P500.

■ Rear Window Wiper and Washer Switch (Outback)

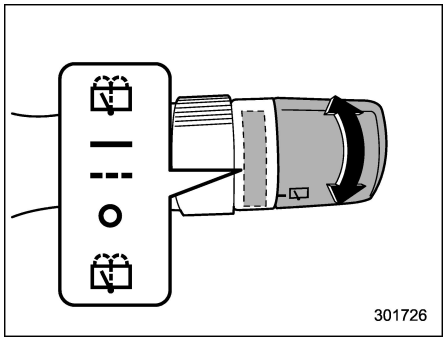

- : Washer (accompanied by wiper operation)
- — : Continuous
- - - : Intermittent
- O : Off
- : Washer (accompanied by wiper operation)

▼ Rear wiper

To turn the rear wiper on, turn the knob switch upward.

To turn the wiper off, return the knob switch to the "O" position.

With the switch turned to the "- - -" position, the rear wiper will operate intermittently at

– CONTINUED –

intervals corresponding to the vehicle speed. In this position, when you move the select lever to the “R” position, the rear wiper will switch to continuous operation. When you move the select lever from the “R” (reverse) position to another position, the rear wiper will return to intermittent operation.

Reverse gear interlocked rear wiper:

Even if the rear wiper switch is in the off “O” position, if the front windshield wiper is operating continuously, the rear wiper will operate intermittently when you move the select lever to the “R” (reverse) position.

The factory setting (default setting) of the reverse gear interlocked rear wiper is as follows.

- U.S.-spec. models: Non-operational
- Other models: Operational

This setting can be changed by a SUBARU dealer. Consult your SUBARU dealer for details.

CAUTION

Do not attach anything that disturbs the rear wiper operation on the rear gate. Doing so may damage the rear wiper when it operates.

▼ **Washer**

To wash the rear window, turn the knob to the “” position. The washer fluid sprays and the wiper operates until you release the knob.

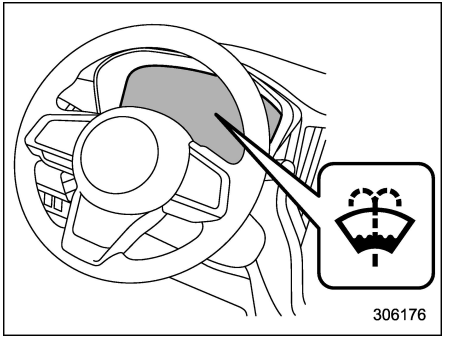

Windshield washer fluid warning light

NOTE

The windshield washer fluid warning light appears when the washer fluid level in the tank has dropped to the lower limit. If the warning light appears, refill the tank with fluid. For the tank refilling method, refer to “Windshield Washer Fluid” ☞P500.

3-16. Defogger and Deicer

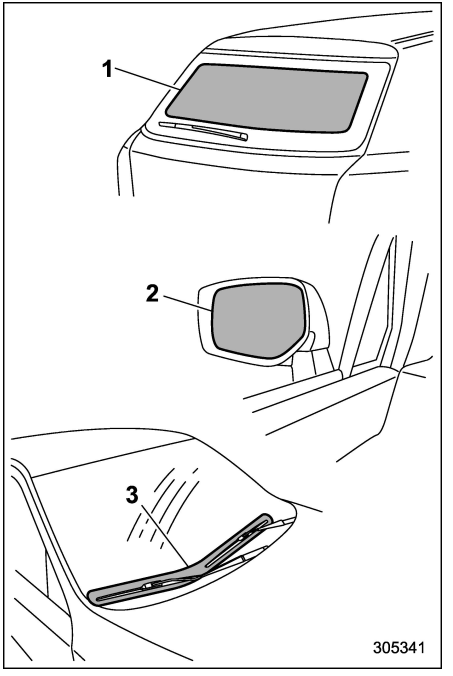

1) Rear window defogger
2) Outside mirror defogger (if equipped)
3) Windshield wiper deicer (if equipped)

The defogger and deicer system is acti-

vated only when the ignition switch is in the "ON" position.

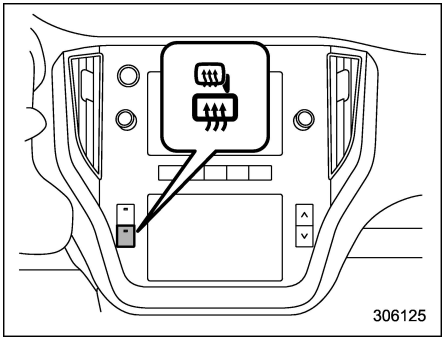

Rear window and outside mirror (if equipped) defogger button (dual 7.0-inch display models)

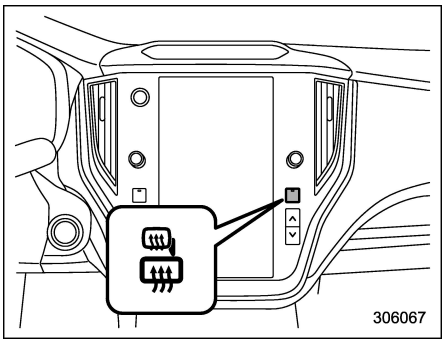

Rear window and outside mirror defogger button (11.6-inch display models)

To activate the defogger and deicer system, press the rear window and outside mirror defogger button. The rear window defogger, outside mirror defogger and windshield wiper deicer are activated simultaneously. The indicator light on the button illuminates while the defogger and deicer system is activated.

To turn them off, press the button again. They also turn off when the ignition switch is turned to the "ACC" or "LOCK"/"OFF" position.

The defogger and deicer system will automatically shut off after approximately 15 minutes. If the rear window and outside mirrors have been cleared and the windshield wiper blade rubbers have been deiced completely before that time, press the button to turn them off. If defrosting, defogging or deicing is not complete, you have to press the button to turn them on again.

It is possible to set the defogger and deicer system for the continuous operation mode by operating the center information display. For details, refer to "Car settings" ☞P215 (11.6-inch display models) or "Vehicle setting icons" ☞P233 (dual 7.0-inch display models).

⚠ CAUTION

- **To prevent the battery from being discharged, do not operate the defogger and deicer system continuously for any longer than necessary.**
- **Do not use sharp instruments or window cleaner containing abrasives to clean the inner surface of the rear window. They may damage the conductors printed on the window.**

NOTE

- **Turn on the defogger and deicer system if the wipers are frozen to the windshield.**
- **If the windshield is covered with snow, remove the snow so that the windshield wiper deicer works effectively.**
- **While the defogger and deicer system is in the continuous operation mode:**
  - **If the vehicle speed remains at 9 mph (15 km/h) or lower for 15 minutes, the windshield wiper deicer system automatically stops operating. However, the rear window defogger system and outside mirror**

– CONTINUED –

defogger system maintain continuous operation in this condition.

– If the vehicle battery voltage drops below the permissible level, continuous operation of the defogger system and deicer system is canceled and the system stops operating.

3-17. Mirrors

Always check that the inside and outside mirrors are properly adjusted before you start driving.

■ Inside Mirror (without Auto-Dimming Function) (If Equipped)

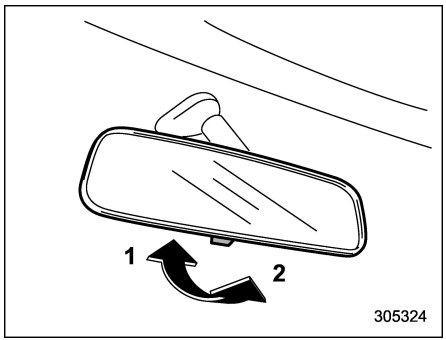

1) Normal position
2) Anti-glare position

Push the tab on the mirror for normal use. To reduce glare from the headlights of the vehicle behind you, pull the tab to the anti-glare position.

■ Auto-Dimming Mirror/Compass with HomeLink® (If Equipped)

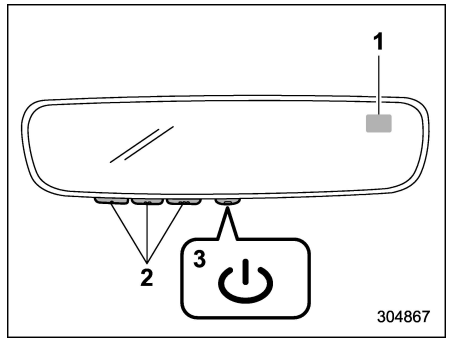

1) Display
2) HomeLink® buttons
3) Switch

During nighttime driving, the auto-dimming feature senses distracting glare from vehicle headlights behind you and automatically dims to eliminate the glare and help preserve your vision.

▼ To Operate the Auto-Dimming Feature

Press the "⏻" switch to turn the auto-dimming feature on/off. The auto-dimming feature is enabled when the switch's green LED indicator is on. The auto-dimming feature will default to on with each ignition

cycle.

▼ To Operate the Compass Feature (if equipped)

1. To turn the compass feature on/off, press and hold the "⏻" switch for more than 3 seconds or until the display turns on/off. The compass feature will default to on with each ignition cycle.
2. If the display reads "C", slowly drive the vehicle in circles until compass is calibrated.

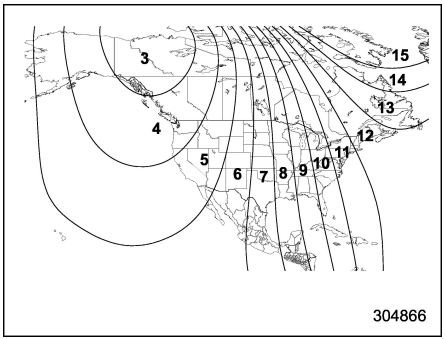

Compass calibration zones

3. To adjust for compass zone variance:
   (1) Find your current location and zone number on the map.
   (2) Press and hold the "⏻" switch for more than 6 seconds or until a zone number appears in the display.
   (3) Once the zone number appears in the display, toggle the "⏻" switch again until your current location zone number appears. After you stop pressing the switch, your new zone number will be saved. Within a few seconds, the display will show a compass direction.
4. If the vehicle's magnetics have changed or if the compass appears inaccurate, recalibrate the compass. Press and hold the "⏻" switch for more than 9 seconds or until a "C" appears in the display. Once a "C" appears in the display, slowly drive the vehicle in circles until compass is calibrated.

▼ HomeLink® Wireless Control System

The HomeLink® Wireless Control System provides a convenient way to replace up to three hand-held radio frequency remotes used to activate devices such as gate operators, garage door openers, entry door locks, security systems, even home lighting. The below steps are generic programming instructions; for Genie and Sommer garage door openers please go directly to the HomeLink® website. Additional information and programming videos can be found at www.HomeLink.com and www.youtube.com/HomeLinkGentex.

⚠ CAUTION

- **Before programming HomeLink® to a garage door opener or gate operator, make sure that people and objects are out of the way of the device to prevent potential harm or damage.**
- **When programming a garage door opener, it is advised to park outside of the garage.**
- **Do not use HomeLink® with any garage door opener that lacks safety stop and reverse features as required by U.S. federal safety standards (this includes any garage door opener model manufactured before April 1, 1982). A garage door that cannot detect an object signaling the door to stop and reverse does not meet current U.S. federal safety standards.**
- **It is also recommended that a new battery be placed in the hand-held remote (garage door opener remote) of the device for quicker and more accurate training.**
- **Turn the ignition switch to the "ON" or "ACC" position before**

– CONTINUED –

programming and/or operating HomeLink®.

- **Keep the hand-held remote (garage door opener remote) of the device you are programming for use in other vehicles as well as for future HomeLink® programming. It is also suggested that upon the sale of the vehicle, the programmed HomeLink® buttons be erased for security purposes. Refer to "Erasing HomeLink® buttons" ☞P260.**

▽ Programming a New HomeLink® button

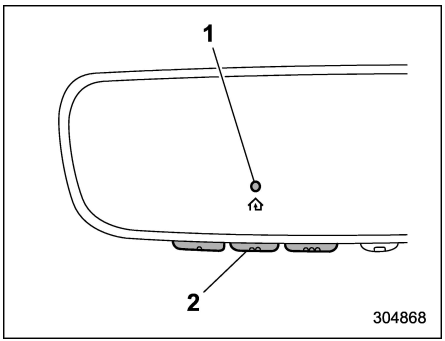

1) Indicator Light
2) HomeLink® buttons

1. Press and release the HomeLink® button that you would like to program. The HomeLink® indicator light will flash orange slowly (if not, refer to "Erasing HomeLink® buttons" ☞P260).

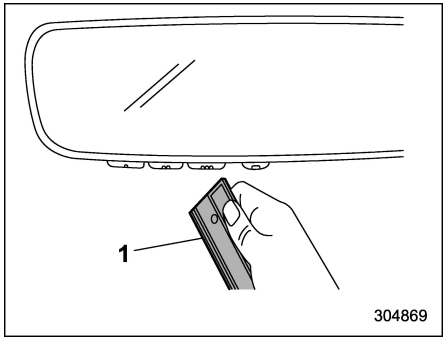

1) Garage door opener remote

2. Position the hand-held remote (garage door opener remote) 1 to 3 inches (2 to 8 cm) away from the HomeLink® button that you would like to program.

NOTE

Some hand-held remotes (garage door opener remotes) may actually train better at a distance of 6 to 12 inches (15 to 30 cm). Keep this in mind if you have difficulty with the programming process.

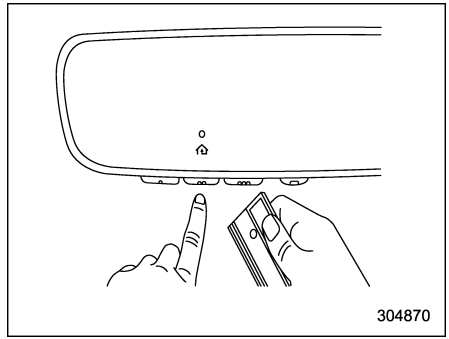

3. While the HomeLink® indicator light is flashing orange, press and hold the hand-held remote button. Continue pressing the hand-held remote button until the HomeLink® indicator light changes from orange to green. You may now release the hand-held remote button.

NOTE

Some devices may require you to replace this "Programming a New HomeLink® button" step 3 with procedures noted in the "Gate Operator / Canadian Programming" section. Refer to "Gate Operator/Canadian Programming" ☞P260.

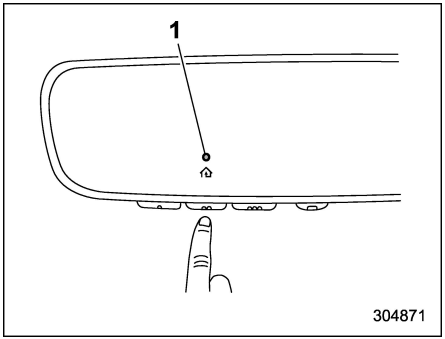

1) Indicator Light

4. Press the HomeLink® button that you would like to program and observe the indicator light.

- If the indicator light remains constant green, your device should operate when the HomeLink® button is pressed. At this point, if your device operates, programming is complete.
- If the indicator light rapidly flashes green, firmly press, hold for two seconds and release the HomeLink® button up to three times to complete the programming process. At this point if your device operates, programming is complete. If the device does not operate, continue with the next step of the programming instructions.

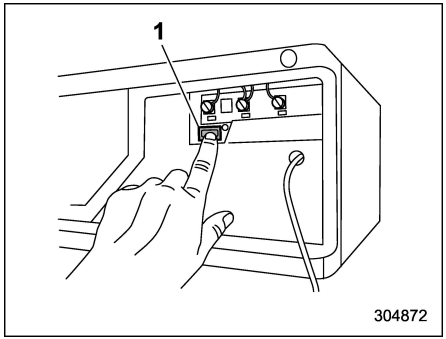

1) “Learn” button

5. At the garage door opener motor, (security gate motor, etc.) locate the “Learn”, “Smart”, or “Program” button. This can usually be found where the hanging antenna wire is attached to the motor-head unit (see the device’s manual to identify this button). The name and color of the button may vary by manufacturer.

NOTE

A ladder and/or second person may simplify the following steps.

6. Firmly press and release the “Learn”, “Smart”, or “Program” button. You now have 30 seconds in which to complete step 7.

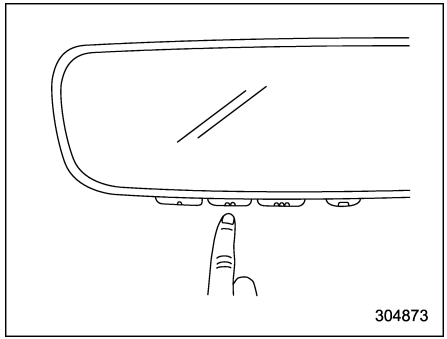

7. Return to the vehicle and firmly press, hold for 2 seconds and release the HomeLink® button up to three times. At this point programming is complete and your device should operate when the HomeLink® button is pressed and released.

– CONTINUED –

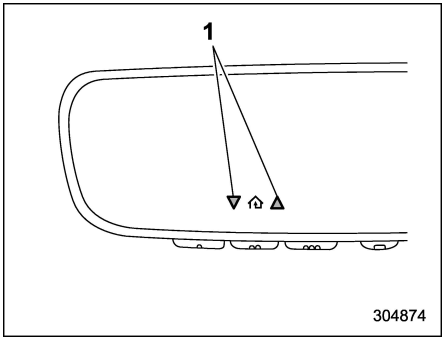

1) Status Indicators

8. If status indicator arrows appear next to the indicator light, please refer to "Garage Door Two-Way Communication" ☞P261.

In the event that there are still programming difficulties or questions, additional HomeLink® information and programming videos can be found at www.HomeLink.com and www.youtube.com/HomeLinkGentex. For Genie and Sommer garage door openers please go directly to the HomeLink® website.

▽ Gate Operator/Canadian Programming

Canadian radio-frequency laws require transmitter remote signals to "time-out" (or quit) after several seconds of transmission, which may not be long enough for HomeLink® to pick up the signal during programming. Similar to this Canadian law, some U.S. gate operators are designed to "time-out" in the same manner. The indicator LED on the hand-held remote will go off when the device times out, indicating that it has finished transmitting.

If you live in Canada or you are having difficulties programming a gate operator or garage door opener by using the programming procedures, replace "Programming a New HomeLink® button" step 3 with the following:

While the HomeLink® indicator light is flashing orange, press and release ("cycle") your device's hand-held remote every two seconds until the HomeLink® indicator light changes from orange to green. You may now release the hand-held remote button.

NOTE

If programming a garage door opener or gate operator, it is advised to unplug the device during the "cycling" process to prevent possible overheating.

Proceed with "Programming a New HomeLink® button" step 4 to complete.

▽ Using HomeLink®

To operate, simply press and release the programmed HomeLink® button. Activation will now occur for the trained device (i.e. garage door opener, gate operator, security system, entry door lock, home/office lighting, etc.). For convenience, the hand-held remote of the device may also be used at any time.

▽ Erasing HomeLink® buttons

To erase programming from the three buttons (individual buttons cannot be erased but can be "reprogrammed" as outlined below), follow the step noted:

Press and hold the two outer HomeLink® buttons for at least 10 seconds. The LED indicator will change from continuously lit to rapidly flashing. Release both buttons. Do not hold for longer than 20 seconds. HomeLink® is now ready to be programmed at any time beginning with "Programming a New HomeLink® button" - step 1.

▽ Reprogramming a Single HomeLink® button

To program a previously trained button, follow these steps:

1. Press and hold the desired HomeLink® button. DO NOT release the button.
2. The indicator light will begin to slowly flash orange after 20 seconds. The HomeLink® button can be released at this point. Proceed with “Programming a New HomeLink® button” - step 3.
3. If you do not complete the programming of a new device to the button, it will revert to the previously stored programming.

▽ Garage Door Two-Way Communication

HomeLink® has the capability of communicating with your garage door opener. HomeLink® can receive and display “closing” or “opening” status messages from compatible garage door opener systems. At any time, HomeLink® can also recall and display the last recorded status communicated by the garage door opener to indicate your garage door being “closed” or “opened”.

HomeLink® has the capability of receiving this communication from the garage door opener at a range up to 820 feet (250 m). Range may be reduced by obstacles such as houses or trees. You may have to slow your vehicle speed to successfully receive the garage door opener communication.

▽ Programming Two-Way Communication

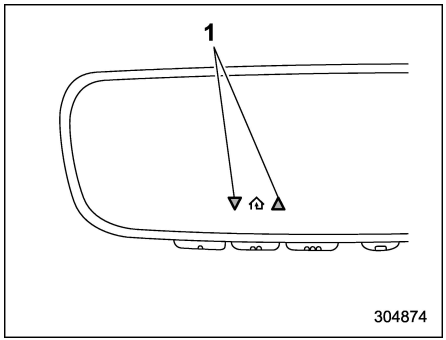

1) Status Indicators

Within 5 seconds after programming a new HomeLink® button, both of HomeLink’s garage door status indicators will flash rapidly green indicating that the garage door two-way communication has been enabled. If your garage door status indicators flashed, two-way communication programming is complete.

If the garage door status indicators do not flash, additional HomeLink® information and programming videos can be found online at www.HomeLink.com and www.youtube.com/HomeLinkGentex.

▽ Using Two-Way Communication

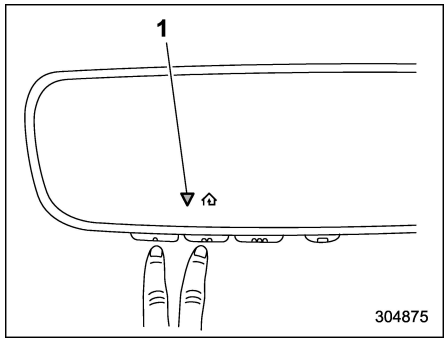

1) Status Indicator

Recall and display (at any time) the last recorded garage door status message communicated to HomeLink® by simultaneously pressing HomeLink® buttons 1 and 2 for 2 seconds. HomeLink® will display the last recorded status for 3 seconds.

If two-way communication programming is successful, HomeLink® will display the status of your garage door opener with arrow indicators (see below).

– CONTINUED –

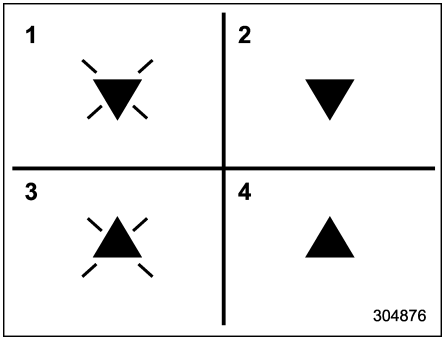

1) Garage Door Opener CLOSING (Blinking Orange)
2) Garage Door Opener CLOSED (Solid Green)
3) Garage Door Opener OPENING (Blinking Orange)
4) Garage Door Opener OPENED (Solid Green)

▽ Certification

In the event that there are still programming difficulties or questions, additional HomeLink® information and programming videos can be found at www.HomeLink.com, www.youtube.com/HomeLinkGentex, or by calling the toll-free HomeLink-hotline at 1-800-355-3515.

- **U.S.-spec. models**

⚠ CAUTION

FCC WARNING

Changes or modifications not expressly approved by the party responsible for compliance could void the user's authority to operate the equipment.

This device complies with FCC rules part 15 and Innovation, Science, and Economic Development Canada RSS-210. Operation is subject to the following two conditions: (1) This device may not cause harmful interference, and (2) This device must accept any interference that may be received including interference that may cause undesired operation. WARNING: The transmitter has been tested and complies with FCC and ISED rules.

Changes or modifications not expressly approved by the party responsible for compliance could void the user's authority to operate the device.

This equipment complies with FCC and ISED radiation exposure limits set forth for an uncontrolled environment. End Users must follow the specific operating instructions for satisfying RF exposure compliance. This transmitter must be at least 20 cm from the user and must not be co-located or operating in conjunction with any other antenna or transmitter.

306210

- **Canada-spec. models**

This device complies with FCC rules part 15 and Innovation, Science, and Economic Development Canada RSS-210. Operation is subject to the following two conditions: (1) This device may not cause harmful interference, and (2) This device must accept any interference that may be received including interference that may cause undesired operation. WARNING: The transmitter has been tested and complies with FCC and ISED rules.

Changes or modifications not expressly approved by the party responsible for compliance could void the user's authority to operate the device.

This equipment complies with FCC and ISED radiation exposure limits set forth for an uncontrolled environment. End Users must follow the specific operating instructions for satisfying RF exposure compliance. This transmitter must be at least 20 cm from the user and must not be co-located or operating in conjunction with any other antenna or transmitter.

306210

Cet appareil est conforme aux règlements de la FCC, section 15, et au CNR-210 d'Innovation, Sciences et Développement économique Canada. Le fonctionnement est assujetti aux deux conditions suivantes : (1) cet appareil ne doit pas causer d'interférences nuisibles et (2) cet appareil doit accepter toute interférence reçue, y compris celle qui pourrait entraîner un dysfonctionnement. MISE EN GARDE : L'émetteur a subi des tests et est conforme aux règlements de la FCC et d'ISDE. Les changements ou modifications non approuvés explicitement par la partie responsable de la conformité pourraient rendre caduque l'autorisation de l'utilisateur de se servir du dispositif.

Cet appareil est conforme aux limites d'exposition aux radiations de la FCC et d'ISDE établies pour un environnement non contrôlé. Les utilisateurs finaux doivent respecter les instructions d'utilisation spécifiques pour satisfaire aux exigences de conformité aux expositions de RF. L'émetteur doit se trouver à 20 cm au minimum de l'utilisateur et ne doit pas être situé au même endroit que tout autre émetteur ou antenne ni fonctionner avec un autre émetteur ou antenne.

306211

HomeLink® and the HomeLink® house are registered trademarks of Gentex Corporation.

WARNING

- **When programming the HomeLink® Wireless Control System, you may be operating a garage door opener or other device. Make sure that people and objects are out of the way of the garage door or other device to prevent potential harm or damage.**
- **Do not use the HomeLink® Wireless Control System with a garage door opener that lacks the safety stop and reverse feature as required by applicable safety standards. A garage door opener which cannot detect an object, signaling the door to stop and reverse, does not meet these safety standards. Using a garage door opener without these features increases risk of serious injury or death. For more information, consult the HomeLink® website at www.homelink.com or call 1-800-355-3515.**

– CONTINUED –

■ Outside Mirrors

▼ Convex mirror (passenger side)

⚠ WARNING

Objects look smaller in a convex mirror and farther away than when viewed in a flat mirror. Do not use the convex mirror to judge the distance of vehicles behind you when changing lanes. Use the inside mirror (or glance backwards) to determine the actual size and distance of objects that you view in convex mirror.

⚠ CAUTION

Make sure to adjust the mirrors before driving.

▼ Remote control mirror switch

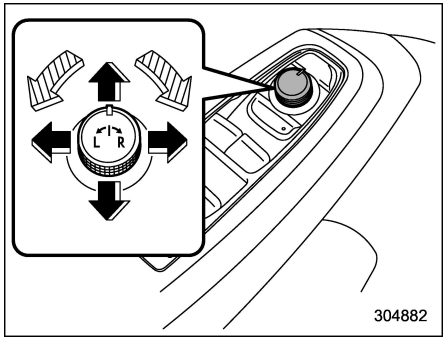

: Select side to adjust

: Direction control

The remote control mirrors operate when the ignition switch is in the “ON” or “ACC” position.

1. Turn the control switch to the side that you want to adjust. “L” is for the left mirror, “R” is for the right mirror.
2. Move the control switch in the direction you want to move the mirror.
3. Return the control switch to the neutral position to prevent unintentional operation.

NOTE

- **The mirrors can also be adjusted manually.**

For models with memory function:

- **The outside mirror can be adjusted for approximately 45 seconds after the following conditions are met.**
  - **– The ignition switch is turned to the “OFF” position.**
  - **– The door is unlocked using the access key fob.**
- **The outside mirror angle can be registered with button “1”, “2” or each of the key fobs. For details, refer to “Power driver’s seat with synchronized outside mirrors memory function” ☞P33.**

▽ Reverse tilt-down feature (if equipped)

When backing the vehicle up, the right and/or left outside mirrors will turn downward automatically to provide better rear visibility.

1. Push the ignition switch to the ON position.
2. Move the select lever to the R (Reverse) position.
3. The outside mirror surface moves downward.

The outside mirror surface will return to its original position when the following condition are met.

- Approximately 9 seconds after the

select lever is moved to any position other than R (Reverse).

- The ignition switch is turned to the "OFF" position.
- The vehicle is running.

NOTE

- **The reverse tilt-down mirror angle can be registered with button "1", "2" or each of the key fobs. For details, refer to "Power driver's seat with synchronized outside mirrors memory function" ☞P33.**
- **The operational/non-operational setting can be changed by operating the center information display. For details, refer to "Car settings" ☞P215.**
- **The factory setting (default setting) for this function is set as the front passenger's side mirror. The setting of driver's side mirror operation can be changed by a SUBARU dealer. Contact your SUBARU dealer for details.**

⚠ CAUTION

Depress the brake pedal during the reverse tilt-down mirror angle adjustment.

To adjust the reverse tilt-down mirror angle, adjust the outside mirror using the remote control mirror switch while the reverse tilt-down operates. For details about how to adjust the outside mirror angle, refer to "Remote control mirror switch" ☞P264.

Memory function:

The angle of the reverse tilt-down mirror can be registered. Register the position with button "1", "2" or each of the access key fobs and retrieve the position.

For details about registration or retrieval of a position, refer to "Power driver's seat with synchronized outside mirrors memory function" ☞P33.

NOTE

If the seat is moved forward or backward 1.18 in (30 mm) or more, the reverse tilt-down will move to the factory default position or the last position hold.

Hold last position function:

The angle of the reverse tilt-down mirror can be set to the latest adjusted angle.

The hold last position function operates when the following condition are met.

- The memory function is not used.
- The seat is moved forward or backward 1.18 in (30 mm) or more.

NOTE

- **The factory setting (default setting) for this function is set as "non-operational". This setting can be changed to "operational" at SUBARU dealers. For more details, contact a SUBARU dealer.**
- **If the hold last position function setting is "non-operation", the reverse tilt-down will move to the factory default position.**

▼ Power folding mirror switch (if equipped)

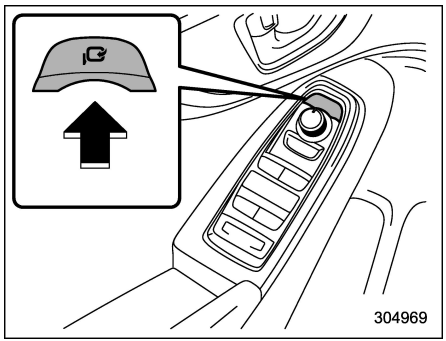

The power folding mirror switch operates when the ignition switch is in the "ON" or "ACC" position.

To fold the outside mirrors, press the power folding mirror switch. To unfold the mirrors, press the switch again.

– CONTINUED –

NOTE

- **If the outside mirrors have been operated (folded or unfolded) manually, when you turn the ignition switch from the "LOCK"/"OFF" position to the "ACC" or "ON" position, the outside mirrors may be adjusted automatically depending on the status of the power folding mirror switch.**
- **If the outside mirrors have been manually folded slightly forward of the regularly unfolded position, when you turn the ignition switch from the "LOCK"/"OFF" position to the "ACC" or "ON" position, the outside mirrors may automatically fold further forward depending on the status of the power folding mirror switch. When this happens, press the power folding mirror switch. By doing so, the outside mirrors which have been folded to the furthest forward position will extend to the regularly unfolded position and then fold rearward in the usual way. In order to unfold the outside mirrors, press the switch again.**
- **When you fold the outside mirrors manually, the mirrors may not unfold when the switch is pressed, even though the motor operating sound is heard. When this happens, operate the power folding mirror switch again.**
- **When you unfold the outside mirrors manually, the mirrors may become wobbly. Be sure to unfold the mirrors by operating the switch. If the outside mirrors are still wobbly, fold the mirrors again and then unfold them by operating the switch again.**
- **When the temperature is low, the outside mirrors may stop during operation. Push the switch again. When the outside mirrors do not work by operating the switch, move the outside mirrors several times manually. This makes it possible to operate them by switch operation.**
- **When you operate the power folding mirror switch continuously, it may not work. This is not a malfunction. Operate after waiting for a short period of time.**
- **The outside mirrors can be operated (folded or unfolded) manually for approximately 45 seconds after the following conditions are met.**
  - **The ignition switch is turned to the "OFF" position.**
  - **The door is unlocked using the access key fob.**

▽ **Power folding door mirror function**

The mirrors are automatically folded when the power folding mirror switch is in the mirror unfolding position, the ignition switch is turned OFF, and the doors are locked.

The mirrors are automatically unfolded when the power folding mirror switch is in the mirror unfolding position and the doors are unlocked.

NOTE

- **The power folding door mirror function does not operate when the power folding mirror switch is in the mirror unfolding position.**
- **The setting of the Power folding door mirrors function can be changed by your SUBARU dealer. Contact your SUBARU dealer for details. Also, the setting of the Power folding door mirrors operation can be changed by operating the center information display. For details, refer to "Car settings" ☞P215.**

3-18. Tilt/Telescopic Steering Wheel

WARNING

- **Do not adjust the steering wheel tilt/telescopic position while driving. This may cause loss of vehicle control and result in personal injury.**
- **If the lever cannot be raised to the fixed position, adjust the steering wheel again. It is dangerous to drive without locking the steering wheel. This may cause loss of vehicle control and result in personal injury.**

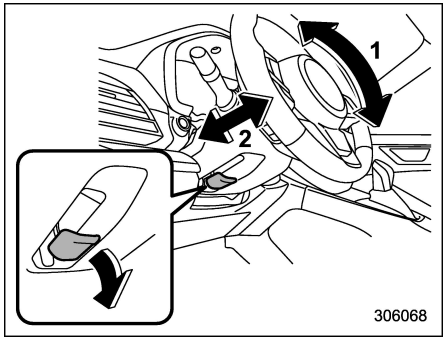

1) Tilt adjustment
2) Telescopic adjustment

1. Adjust the seat position. Refer to “Front Seats” ☞P28.
2. Pull the tilt/telescopic lock lever down.
3. Move the steering wheel to the desired level.
4. Pull the lever up to lock the steering wheel in place.
5. Make sure that the steering wheel is securely locked by moving it up and down, and forward and backward.

3-19. Heated Steering Wheel System (If Equipped)

The Heated Steering Wheel system warms the steering wheel at a constant temperature.

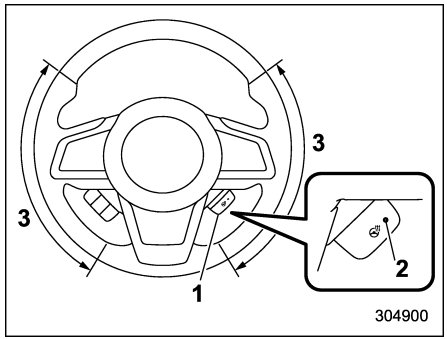

1) Heated Steering Wheel switch
2) Indicator light
3) Heated area

To turn on the Heated Steering Wheel system, pull the Heated Steering Wheel switch when the ignition switch is in the “ACC” or “ON” position. Then the steering wheel will be warmed and the indicator light on the switch will illuminate. To turn off the Heated Steering Wheel system, pull the switch again. Then the indicator light will turn off.

– CONTINUED –

CAUTION

- **Use the Heated Steering Wheel system with the engine running. Otherwise, the battery voltage may drop below the permissible level and it may not be possible to start the engine.**
- **There is a possibility that people with delicate skin may suffer slight burns even at low temperatures if they use the Heated Steering Wheel for a long period of time. When using the Heated Steering Wheel, always be sure to warn the persons concerned.**
- **Do not cover the Heated Steering Wheel with an object such as a steering wheel cover. Doing so may cause the Heated Steering Wheel to overheat.**

NOTE

- **If the surface temperature of the steering wheel is approximately above 104°F (40°C) when the Heated Steering Wheel system is turned on, the system will not heat the steering wheel. Then, the indicator light will continue to illuminate.**
- **The Heated Steering Wheel system will automatically turn off approximately 30 minutes after the system has been turned on.**

3-20. Horn

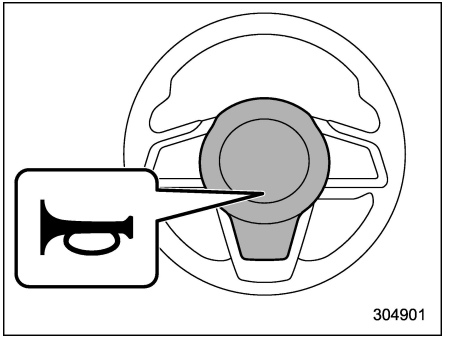

To sound the horn, push the horn pad.

4-1. Ventilator Control 272
Center Ventilators 272
Side Ventilators 272
Rear Ventilators (If Equipped) 272
4-2. Climate Control Panel 273
Dual 7.0-Inch Display Models 273
11.6-Inch Display Models 276
4-3. Automatic Climate Control Operation 279
Sensors 280
4-4. Manual Climate Control 281
Airflow Mode Selection 281
Temperature Control 282
Fan Speed Control 283
Air Conditioner Control 283
Air Inlet Selection 283
To Turn Off the Climate Control System 284
4-5. Front Seat Heater and Ventilation (If Equipped) 284
Front Seat Heater 284
Front Seat Ventilation 284
4-6. Defrosting 285
4-7. Operating Tips for Heater and Air Conditioner 286
Cleaning Ventilator Grille 286
Efficient Cooling after Parking in Direct Sunlight 286
Lubrication Oil Circulation in the Refrigerant Circuit 286
Checking Air Conditioning System before Summer Season 286
Cooling and Dehumidifying in High Humidity and Low Temperature Weather Condition 287
Air Conditioner Compressor Shut-Off When Engine Is Heavily Loaded 287
Refrigerant for Your Climate Control System 287
4-8. Air Filtration System 287
Replacing the Cabin Air Filter 288

4-1. Ventilator Control

■ Center Ventilators

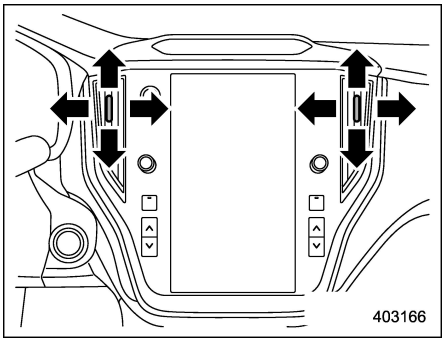

Move the tabs to adjust the flow direction.

To close the ventilator, move the tab all the way down.

■ Side Ventilators

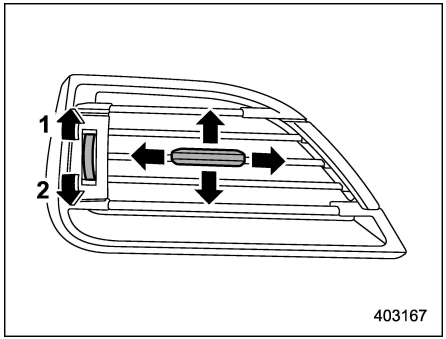

1) Open
2) Close

Move the tab to adjust the flow direction.

To open the ventilator, turn the side grille open/close wheel upward to the "≋" position.

To close it, turn the wheel downward to the "⊠" position.

■ Rear Ventilators (If Equipped)

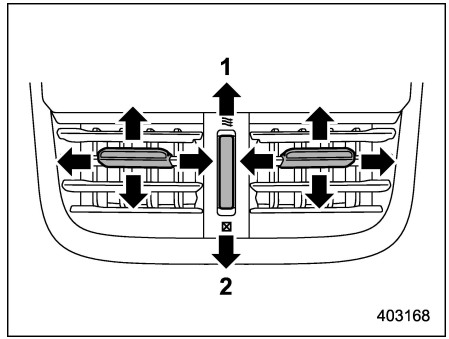

1) Open
2) Close

Move the tab to adjust the flow direction.

To open the ventilator, turn the rear grille open/close wheel upward to the "≋" position.

To close it, turn the wheel downward to the "⊠" position.

4-2. Climate Control Panel

■ Dual 7.0-Inch Display Models

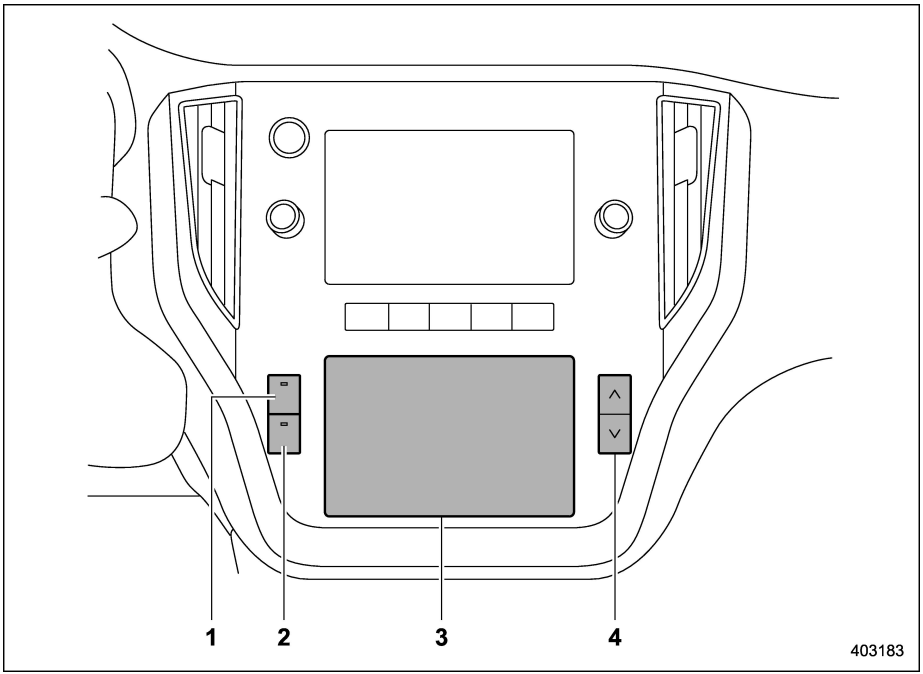

1) Defroster button (Refer to “Defrosting” ☞P285.)
2) Rear window and outside mirror defogger button (Refer to “Defogger and Deicer” ☞P254.)
3) Climate control screen (lower display)
4) Temperature control button (Refer to “Temperature Control” ☞P282.)

– CONTINUED –

▼ Climate control screen

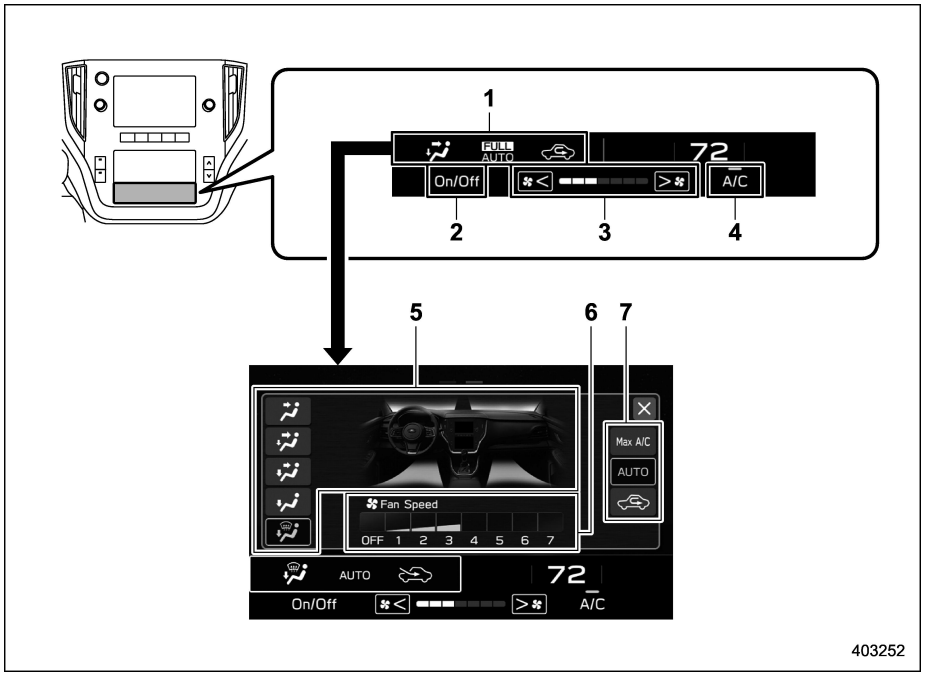

Climate control screen (lower display)

➡ : Touch the climate control mode indicator
1) Climate control mode indicator
2) Climate control ON/OFF button
3) Fan speed indicator
4) Customizable icon*
5) Airflow mode selection screen
6) Fan speed control screen
7) Climate control mode select button

*: The customizable icon can be changed to the favorite icon. Refer to “General settings” ☞P228.

▼ Temperature control screen

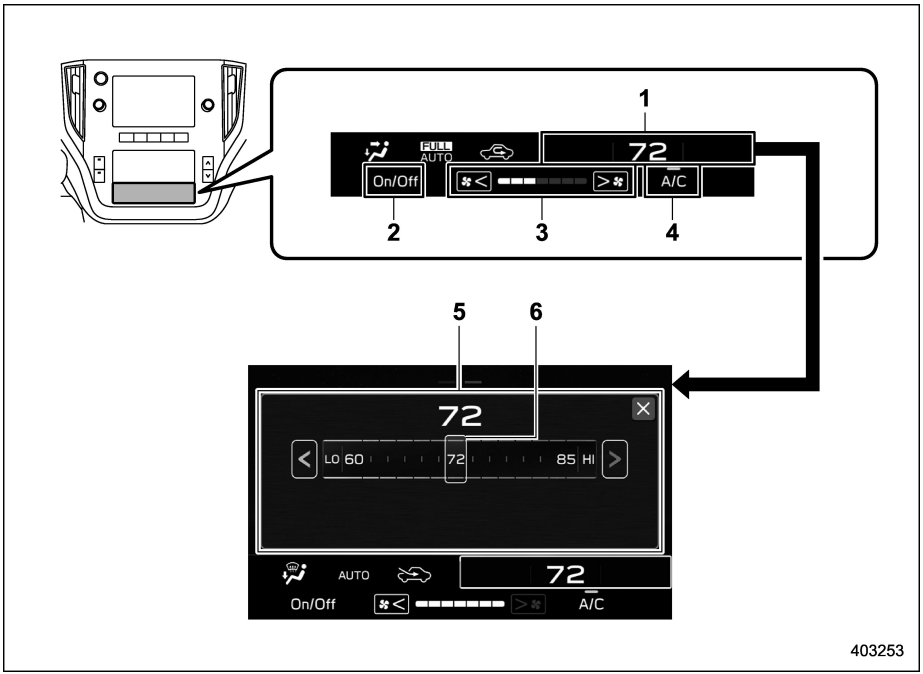

Climate control screen (lower display)

➡ : Touch the set temperature indicator
1) Set temperature indicator
2) Climate control ON/OFF button
3) Fan speed indicator
4) Customizable icon*
5) Temperature control screen
6) Temperature control bar

*: The customizable icon can be changed to the favorite icon. Refer to “General settings” ☞P228.

– CONTINUED –

■ 11.6-Inch Display Models

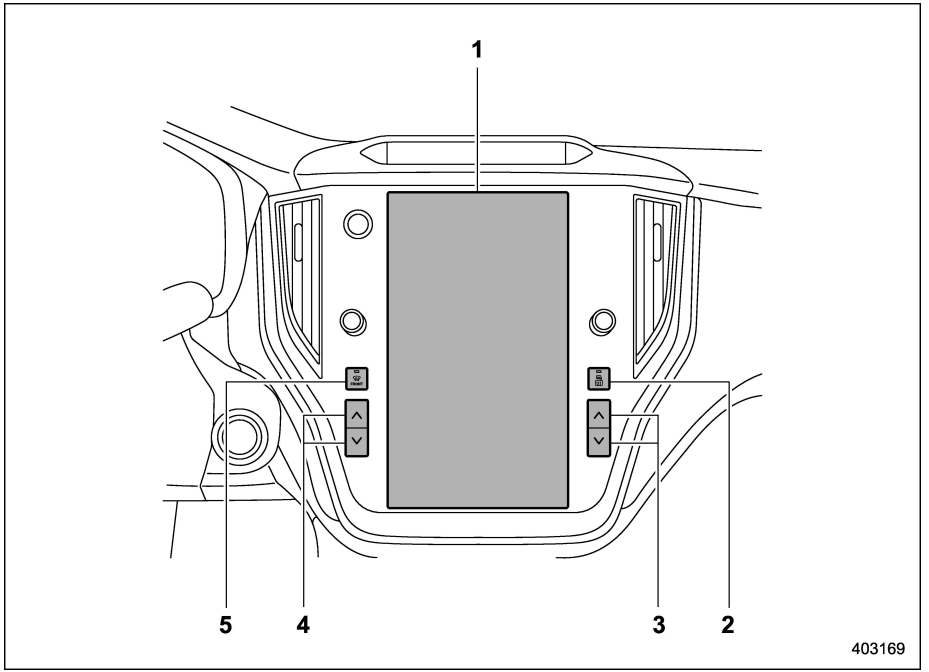

1) Climate control screen
2) Rear window and outside mirror defogger button (Refer to “Defogger and Deicer” ☞P254.)
3) Passenger’s side temperature control button (Refer to “Temperature Control” ☞P282.)
4) Driver’s side temperature control button (Refer to “Temperature Control” ☞P282.)
5) Defroster button (Refer to “Defrosting” ☞P285.)

▼ Climate control screen

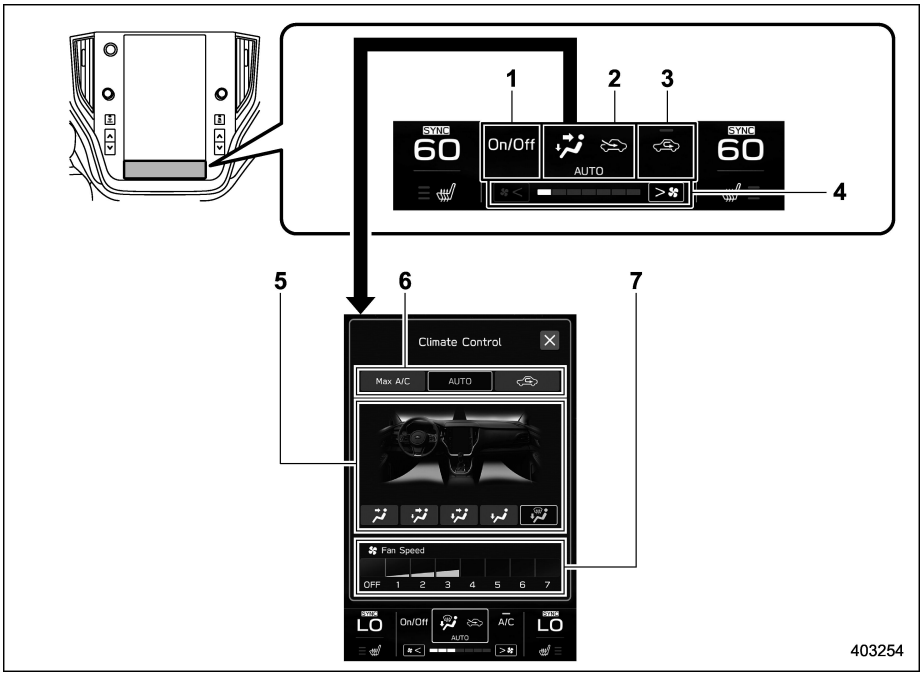

➡ : Touch the climate control mode indicator
1) Climate control ON/OFF button
2) Climate control mode indicator
3) Customizable icon*1
4) Fan speed indicator
5) Airflow mode selection screen
6) Climate control mode select button
7) Fan speed control screen

*1: The customizable icon can be changed to the favorite icon. Refer to “General settings” ☞P211.

– CONTINUED –

▼ Temperature control screen

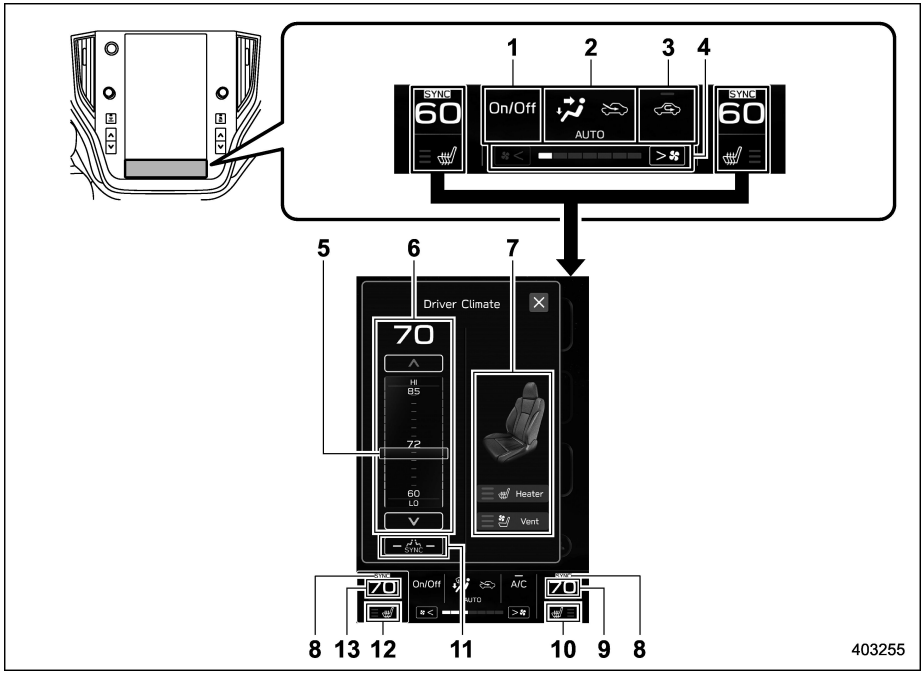

➡ : Touch the temperature control screen

1) Climate control ON/OFF button
2) Climate control mode indicator
3) Customizable icon*1
4) Fan speed indicator
5) Temperature control bar
6) Temperature control screen
7) Seat heater/ventilation control screen*2
8) SYNC mode indicator
9) Set temperature indicator (right-hand side)
10) Front passenger's seat heater/ventilation indicator*2
11) SYNC button
12) Driver's seat heater/ventilation indicator*2
13) Set temperature indicator (left-hand side)

*1: The customizable icon can be changed to the favorite icon. Refer to "General settings" ☞P211.

*2: For details, refer to "Front Seat Heater and Ventilation" ☞P284.

4-3. Automatic Climate Control Operation

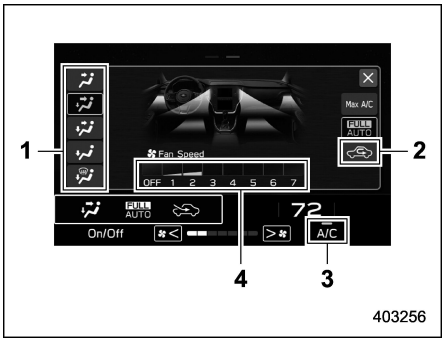

Climate control screen (dual 7.0-inch display models)

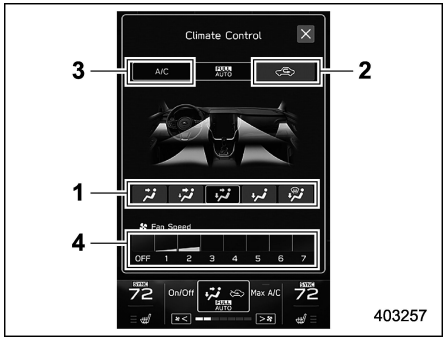

Climate control screen (11.6-inch display models)

1) Airflow distribution
2) Air inlet selection
3) Air conditioner compressor
4) Fan speed

When the full auto mode is selected, the following functions are automatically controlled.

- Fan speed
- Airflow distribution
- Air inlet selection
- Air conditioner compressor operation

To activate this mode, perform the following.

1. Touch the climate control mode indicator.
2. Touch “AUTO”.
3. Set the preferred temperature. Refer to “Temperature Control” ☞P282.

NOTE

- **Operate the automatic climate control system when the engine is running.**
- **Even when cooling is not necessary, the air conditioner compressor will automatically turn on if the temperature is set much lower than the current outlet air temperature. Even in this case, the “A/C” indicator light on the climate control screen illuminates.**
- **The controllable temperature range may vary depending on the regional specifications of the vehicle.**
- **If something other than temperature control is operated while the display is in full auto mode, the “FULL” indicator will turn off and the “AUTO” indicator light will remain illuminated. You can then manually control the system as desired using the climate control screen. To change the system back to full auto mode, touch “AUTO”.**

To turn off the climate control system, touch the climate control ON/OFF button.

At this time, the air inlet selection mode will differ depending on the auto mode and manual mode.

– CONTINUED –

Auto mode: Changes to the outside air circulation mode.

Manual mode: Continues the mode when the climate control mode is set to OFF.

■ Sensors

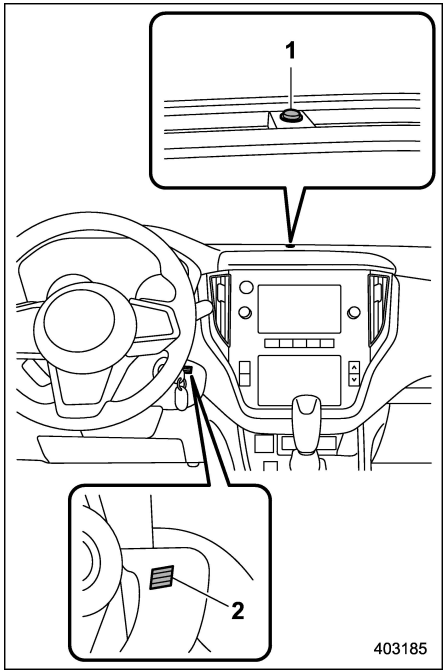

1) Solar sensor
2) Interior air temperature sensor

The automatic climate control system employs several sensors. These sensors are delicate. If they are treated incorrectly and become damaged, the system may not be able to control the interior temperature correctly. To avoid damaging the sensors, observe the following precautions:

– Do not subject the sensors to impact.
– Keep water away from the sensors.
– Do not cover the sensors.

4-4. Manual Climate Control

■ Airflow Mode Selection

Select the preferred airflow mode by the following operation.

Via the climate control screen:

1. Touch the climate control mode indicator.
2. Touch the preferred airflow mode.

Airflow modes are as follows.

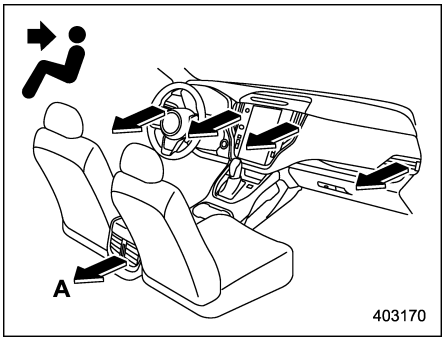

A) Models with rear ventilators

Ventilation: Instrument panel outlets

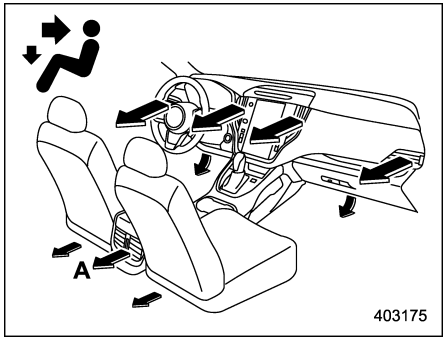

A) Models with rear ventilators

Ventilation 2: Instrument panel outlets and foot outlets

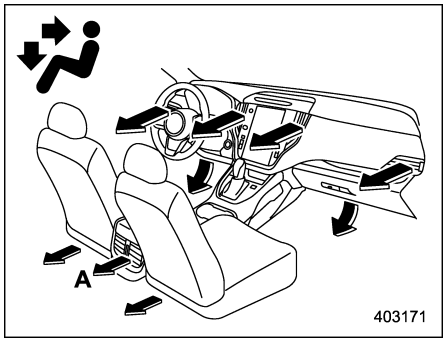

A) Models with rear ventilators

Bi-level: Instrument panel outlets and the foot outlets

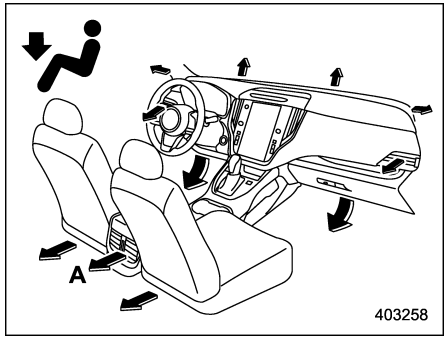

A) Models with rear ventilators

Heat: Foot outlets, both side outlets of the instrument panel and some through windshield defroster outlets (A small amount of air flows to the windshield and both side windows to prevent fogging.)

– CONTINUED –

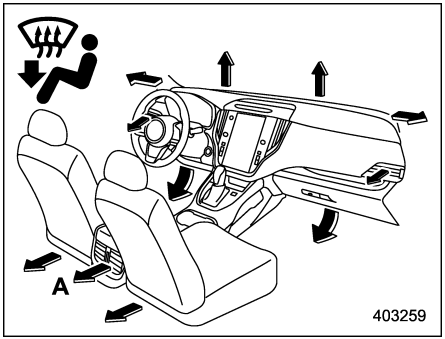

A) Models with rear ventilators

Heat-def: Windshield defroster outlets, foot outlets and both side outlets of the instrument panel

Via the defroster button:

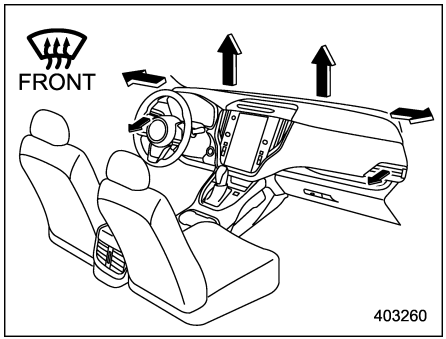

Defrost: Windshield defroster outlets and both side outlets of the instrument panel

■ Temperature Control

Perform the following operation to regulate the temperature of airflow from the air outlets.

Temperature control buttons:

Press the temperature control button to the blue side (cool) or the red side (warm).

Temperature control screen:

1. Touch the set temperature indicator.
2. Touch and move the temperature control bar.

▼ Max A/C mode

For quicker cooling, touch “MAX A/C” on the climate control mode select button or customizable icon.

When the Max A/C mode is on, the following settings will be changed automatically.

- The air conditioner will turn on.
- The temperature will be set on the lowest.
- The fan speed will be set on the maximum speed.
- The air inlet will be set to the recirculation mode.
- The airflow mode setting will be set to the ventilation mode.

To turn off the Max A/C mode and return to the previous setting, touch “MAX A/C” again.

▼ SYNC mode (11.6-inch display models)

When the SYNC mode is turned on, both the driver’s and passenger’s side temperatures are synchronized using the driver’s side temperature control button and temperature control display.

1. Touch the set temperature indicator.
2. Touch “SYNC” to turn the SYNC mode on or off.

The SYNC mode indicator will turn white.

Touch “SYNC” again, press the passenger’s side temperature control button or operate the passenger’s side temperature control bar to cancel the SYNC mode. The SYNC mode indicator will be grayed out. In this case, temperature control on the driver’s side and passenger’s side will be separated. The temperature will be controlled individually using the driver’s and passenger’s temperature control button and the driver’s and passenger’s temperature control bar.

■ Fan Speed Control

Select the preferred fan speed by the following operation.

Via the fan speed indicator:

Touch [*<] or [>*] on the climate control screen.

Via the fan speed control screen:

1. Touch the climate control mode indicator
2. Touch the preferred fan speed. It is also possible to change the fan speed by dragging.

■ Air Conditioner Control

The air conditioner operates only when the engine is running.

Perform the following operation while the fan is in operation to turn on the air conditioner.

- If “A/C” is displayed on the customizable icon, touch “A/C”. When the air conditioner is on, the “A/C” indicator illuminates.
- If a customizable icon other than “A/C” is displayed, touch the climate control mode indicator. Then touch “A/C” on the climate control mode select button. When the air conditioner is on, “A/C” will turn blue.

To turn off the air conditioner, touch “A/C” again. The indicator light will turn off or it will be grayed out.

NOTE

For efficient defogging or dehumidifying in cold weather, turn on the air conditioner. However, if the ambient temperature decreases to approximately 32°F (0°C), the air conditioner and dehumidification system may not work properly.

■ Air Inlet Selection

Select the air inlet by pressing the air inlet selection button.

Recirculation mode: Interior air is recirculated inside the vehicle. This mode is used for fast cooling with the air conditioner or when driving on a dusty road. Perform the following operation to select this mode.

- is displayed on the customizable icon:
  (1) Touch .
- is not displayed on the customizable icon:
  (1) Touch the climate control mode indicator.
  (2) Touch on the climate control mode select button.

will be displayed on the climate control mode indicator.

Outside air circulation mode: Outside air is drawn into the passenger compartment. This mode is used when the interior has cooled to a comfortable temperature and the road is no longer dusty.

Perform the same operation as the recirculation mode to change the mode. will be displayed on the climate control mode indicator.

⚠ WARNING

Continued operation in the recirculation mode may fog up the windows. Switch to the outside air circulation mode as soon as the

– CONTINUED –

outside dusty condition clears.

■ To Turn Off the Climate Control System

To turn off the climate control system, touch the climate control ON/OFF button.

4-5. Front Seat Heater and Ventilation (If Equipped)

■ Front Seat Heater

The seat heater operates when the ignition switch is in the “ON” position.

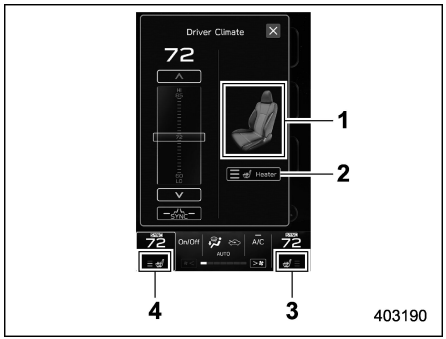

1) Front seat display
2) Seat heater selector icon
3) Front passenger’s seat heater/ventilation indicator
4) Driver’s seat heater/ventilation indicator

1. Touch the seat heater/ventilation indicator on the climate control screen.
2. Touch the seat heater selector icon on the driver/passenger climate screen. Each time you touch the icon, the mode will change as follows.

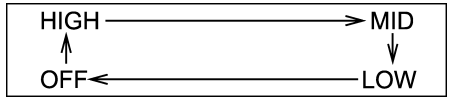

HIGH:
3 indicator lights are illuminated.
MID:
2 indicator lights are illuminated.
LOW:
1 indicator light is illuminated.
OFF:
All indicator lights turn off.

When in LOW mode, touch the icon again to turn all indicators OFF.

Selecting HIGH mode will cause the seat to heat up quicker.

Holding and releasing the seat heater icon turns the seat heater OFF in any mode.

NOTE

The front seat heater function cannot be used simultaneously with the seat ventilation (if equipped).

■ Front Seat Ventilation

The front seat ventilation operates when the ignition switch is in the “ON” position.

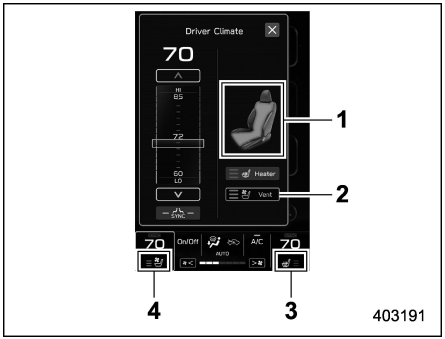

1) Front seat display
2) Seat ventilation selector icon
3) Front passenger's seat heater/ventilation indicator
4) Driver's seat heater/ventilation indicator

1. Touch the seat heater/ventilation indicator on the climate control screen.

2. Touch the seat ventilation selector icon on the driver/passenger climate screen. Each time you touch the icon, the mode will change as follows.

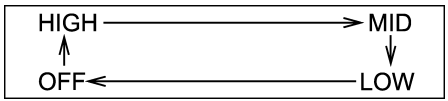

HIGH:
3 indicator lights are illuminated.

MID:
2 indicator lights are illuminated.

LOW:
1 indicator light is illuminated.

OFF:
All indicator lights turn off.

When in LOW mode, touch the icon again to turn all indicators OFF.

Holding and releasing the seat ventilation selector icon turns the seat ventilation OFF in any mode.

4-6. Defrosting

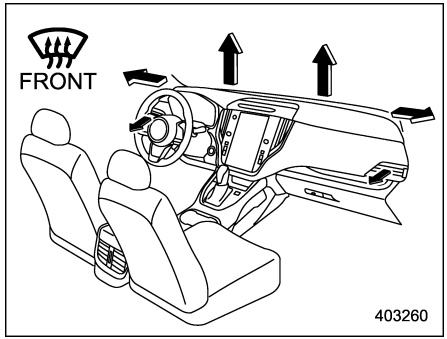

To defrost or dehumidify the windshield and front door windows, perform the following procedures.

- To select the "" mode, press the defroster button.
- To select the "" mode, touch "" on the airflow mode selection screen.

NOTE

- **When the "" or "" mode is selected, the air conditioner compressor operates automatically regardless of the position of the air conditioner button to defrost the windshield more quickly. However, the indicator on the air conditioner button may not illuminate. At the same time, the air inlet**

– CONTINUED –

selection is automatically set to the outside air circulation mode.

● After defrosting the windshield by pressing the defroster button "", pressing the button again returns the system to the setting that had been selected before the defroster was activated.

4-7. Operating Tips for Heater and Air Conditioner

■ Cleaning Ventilator Grille

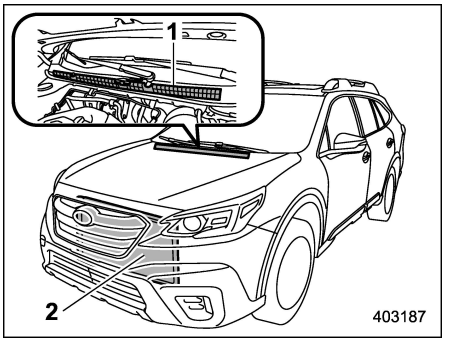

1) Front ventilator inlet grille
2) Condenser

Always keep the front ventilator inlet grille free of snow, leaves, or other obstructions to ensure efficient heating and defrosting. Since the condenser is located in front of the radiator, this area should be kept clean because cooling performance is impaired by any accumulation of insects and leaves on the condenser.

■ Efficient Cooling after Parking in Direct Sunlight

After parking in direct sunlight, drive with the windows open for a few minutes to allow outside air to circulate into the heated interior. This results in quicker cooling by the air conditioner. Keep the windows closed during the operation of the air conditioner for maximum cooling efficiency.

■ Lubrication Oil Circulation in the Refrigerant Circuit

Operate the air conditioner compressor at a low engine speed (at idle or low driving speeds) a few minutes each month during the off-season to circulate its oil.

■ Checking Air Conditioning System before Summer Season

Check the air conditioner unit for refrigerant leaks, hose conditions, and proper operation each spring. Have the air conditioning system checked by your SUBARU dealer.

■ Cooling and Dehumidifying in High Humidity and Low Temperature Weather Condition

Under certain weather conditions (high relative humidity, low temperatures, etc.) a small amount of water vapor emission from the air outlets may be noticed. This condition is normal and does not indicate any problem with the air conditioning system.

■ Air Conditioner Compressor Shut-Off When Engine Is Heavily Loaded

To improve acceleration and gas mileage, the air conditioner compressor is designed to temporarily shut off during air conditioner operation whenever the accelerator is fully depressed such as during rapid acceleration or when driving on a steep upgrade.

■ Refrigerant for Your Climate Control System

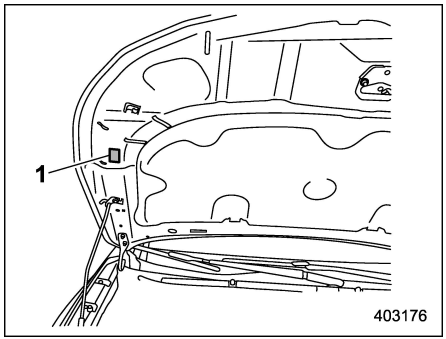

1) Air conditioner label

Your air conditioner uses ozone friendly refrigerant R-1234yf (HFO-1234yf).

Before adding, changing or checking the refrigerant, check the air conditioner label in the location shown in the illustration to confirm which type of refrigerant is used in your vehicle.

Consult your SUBARU dealer for service.

Repairs needed as a result of using the wrong refrigerant are not covered under warranty.

4-8. Air Filtration System

Your vehicle's air conditioning system is equipped with an air filtration system. Replace the cabin air filter according to the replacement schedule found in the "Warranty and Maintenance Booklet." This schedule should be followed to maintain the filter's dust collection ability. Under extremely dusty conditions, the filter should be replaced more frequently. Have your filter checked or replaced by your SUBARU dealer. For replacement, use only a genuine SUBARU air filter kit.

⚠ CAUTION

Contact your SUBARU dealer if the following occurs, even if it is not yet time to change the filter.

- **Reduction of the airflow through the vents.**
- **Windshield gets easily fogged or misted.**

NOTE

The filter can influence the air conditioning, heating and defroster performance if not properly maintained.

– CONTINUED –

■ Replacing the Cabin Air Filter

1. Remove the glove box.
   (1) Open the glove box.

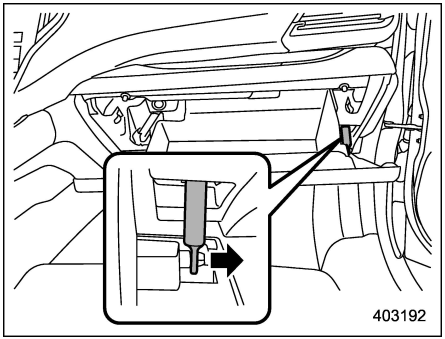

   (2) Remove the damper shaft from the glove box.

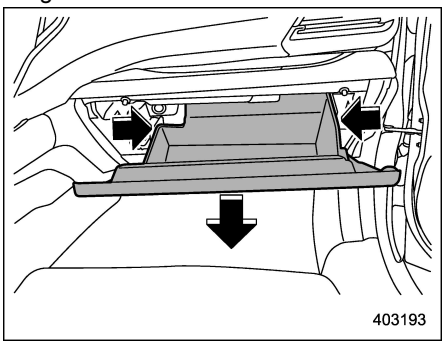

   (3) Push both sides of the glove box inward to unlock the stoppers and then pull down the glove box as far as it will go.

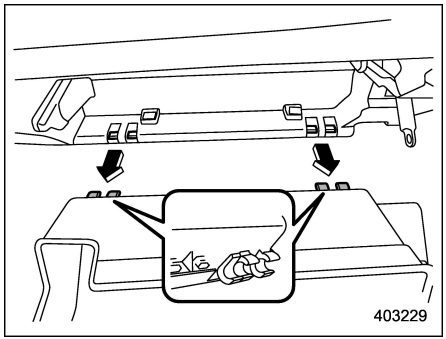

   (4) Pull out the glove box horizontally and remove the hinge portion. When doing this, be careful not to damage the hinge.

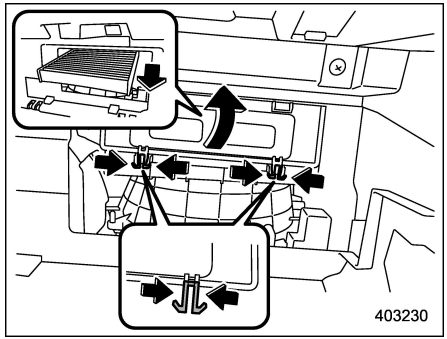

2. Remove the cabin air filter according to the following procedure in order to prevent dust on the air cleaner from falling to the inside of its housing.
   (1) Pinch both tabs and remove the filter cover.
   (2) Gently tilt down the end of the filter and slowly pull it out 0.4 in (1 cm).
   (3) Slowly pull out the rest of the filter.

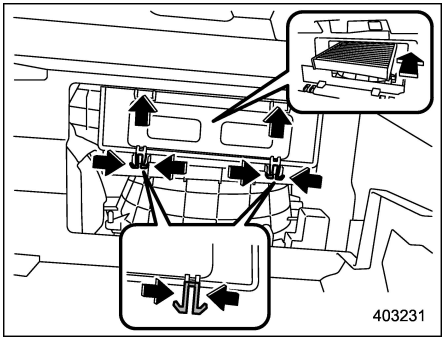

3. Replace the cabin air filter with a new one and then reinstall the cover.

CAUTION

The arrow mark on the filter must point UP.

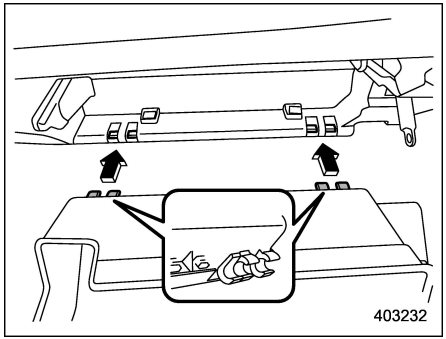

4. Reinstall the glove box, and connect the damper shaft.
5. Close the glove box.

5-1. Antenna 292
Printed Antenna..... 292
Roof Antenna..... 292
5-2. Audio Set 292

5-1. Antenna

■ Printed Antenna

CAUTION

Do not use sharp instruments or window cleaner containing abrasives to clean the inner surface of the window on which the antenna is printed. Doing so may damage the antenna printed on the window.

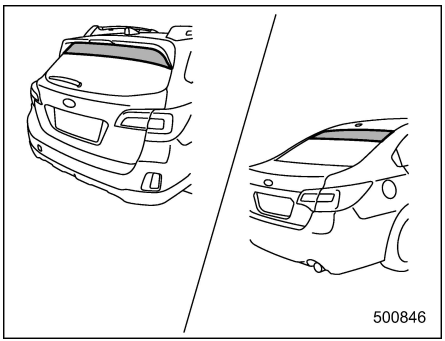

The antenna is printed on the inner surface of the rear window glass.

NOTE

Antenna performance will deteriorate significantly if you apply tinting film or any other material over the antenna portion of the rear window glass.

■ Roof Antenna

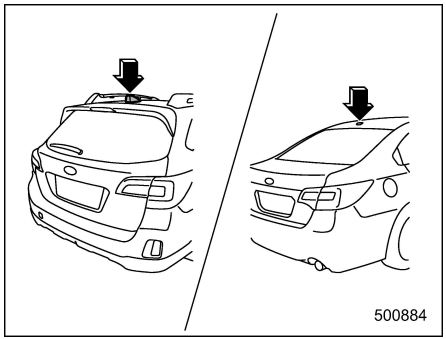

The satellite radio antenna and telematics antenna (if equipped) are installed in the center of the roof at the rear.

5-2. Audio Set

If your vehicle is equipped with a genuine SUBARU navigation system or audio system, refer to the separate navigation/audio Owner's Manual for details.

6-1. Interior Light 296
Dome Light..... 296
Map Lights 296
Cargo Area Light (Outback) 297
OFF Delay Timer..... 297
6-2. Sun Visors..... 297
Vanity Mirror with Light..... 298
6-3. Storage Compartment 298
Glove Box 299
Center Console..... 299
Overhead Console 299
6-4. Cup Holder 300
Front Passenger's Cup Holder 300
Rear Passenger's Cup Holder 301
6-5. Bottle Holders 301
6-6. Accessory Power Outlets 302
6-7. USB Power Supply 304
How to Use the USB Power Supply 304
6-8. Assist Grip 305
6-9. Coat Hook 306
6-10. Shopping Bag Hook 306
Legacy..... 306
Outback 307
6-11. Floor Mat 307
6-12. Lifting Cargo Cover (Outback – If Equipped) 308
To Install the Cover Housing 308
Using the Cover 309
To Remove the Cover Housing 311
To Stow the Cover..... 311
To Take Out the Stowed Cover 312
6-13. Convenient Tie-Down Hooks (Outback) 312
6-14. Adjustable Storage Net (Outback) 313
6-15. Under-Floor Storage Compartment..... 313

6-1. Interior Light

CAUTION

When leaving your vehicle, make sure the lights are turned off to avoid battery discharge.

■ Dome Light

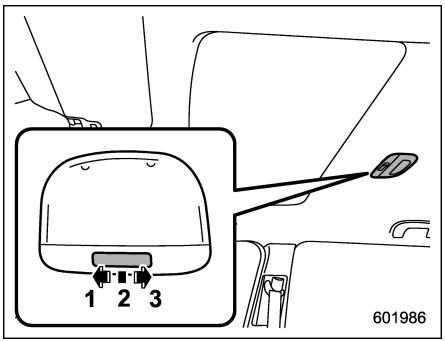

1) ON
2) DOOR
3) OFF

The dome light switch has the following positions:

ON: The light turns on.
OFF: The light turns off.

DOOR: The dome light illuminates automatically when any of the doors (for Outback, including the rear gate) is opened. Several seconds after all of the doors (including the rear gate) are closed, the dome light gradually turns off. For details, refer to "OFF Delay Timer" ☞P297.

■ Map Lights

▼ Map light switches

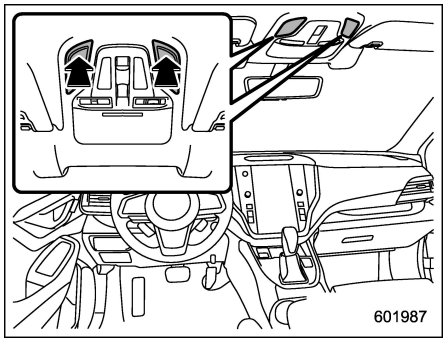

To turn on the map light, press the lens.
To turn it off, press the lens again.

CAUTION

Do not keep watching the light source because they use LEDs. Doing so could damage your eyes.

▼ Door interlock switch

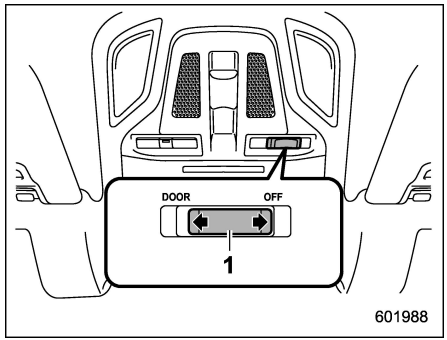

1) Door interlock switch

The door interlock switch has the following positions.

OFF: The map lights do not illuminate automatically in conjunction with a door opening. However, the lights can be turned on manually by pressing the map light lens.

DOOR: The map lights illuminate automatically when any of the doors (other than the rear gate or trunk lid) is opened even

while the map light is off. Several seconds after all of the doors (other than the rear gate or trunk lid) are closed, the map lights gradually turn off. For details, refer to “OFF Delay Timer” ☞P297.

■ Cargo Area Light (Outback)

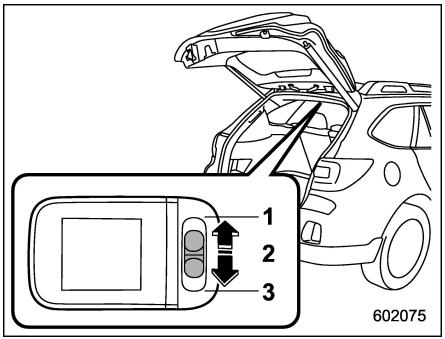

1) ON
2) OFF
3) DOOR

The cargo area light switch has the following positions.

ON: The light turns on.

OFF: The light turns off.

DOOR: The light illuminates only when the rear gate is opened. The light gradually turns off several seconds after the rear gate is closed. For derails, refer to “OFF Delay Timer” ☞P297.

■ OFF Delay Timer

The following lights have an automatic illumination function.

- Dome light
- Map lights
- Trunk (Legacy)
- Cargo area light (Outback)

When the interior light switch is set to the “DOOR” position, the light will automatically turn on and off depending on the locking and unlocking of the doors, the opening and closing of the doors, as well as the position of the ignition switch.

NOTE

The setting for the period of time in which the lights remain on (OFF delay timer) can be changed by a SUBARU dealer. Contact your SUBARU dealer for details. Also, the setting can be changed by operating the center information display. For details, refer to “Car settings” ☞P215 (11.6-inch display models) or “Vehicle setting icons” ☞P233 (dual 7.0-inch display models).

6-2. Sun Visors

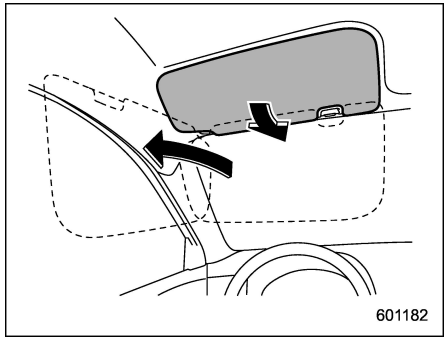

To block out glare, swing down the visors.

To use the sun visor at a side window, swing it down and move it sideways.

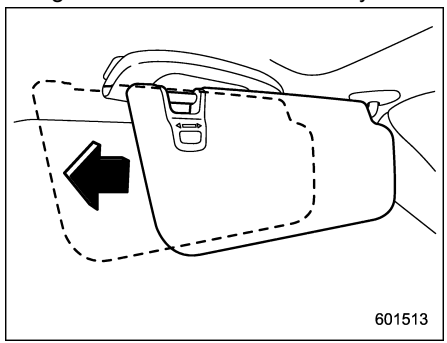

With the sun visor positioned over the side

– CONTINUED –

window, you can slide the sun visor toward the rear to prevent glare through the gap between the sun visor and center pillar. To slide the sun visor, pull it toward the rear of the vehicle. When you have finished sliding it, push it toward the front of the vehicle.

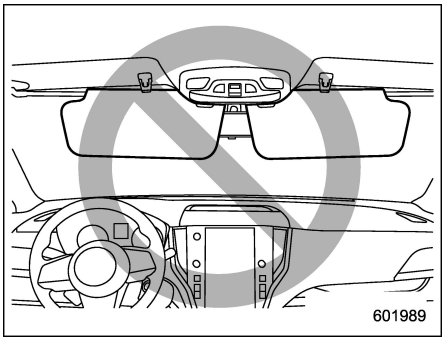

CAUTION

Do not slide the sun visor over the windshield. The slided sun visor would obstruct your view of the rearview mirror.

■ Vanity Mirror with Light

CAUTION

Keep the vanity mirror cover closed while the car is being driven to avoid being blinded by glare.

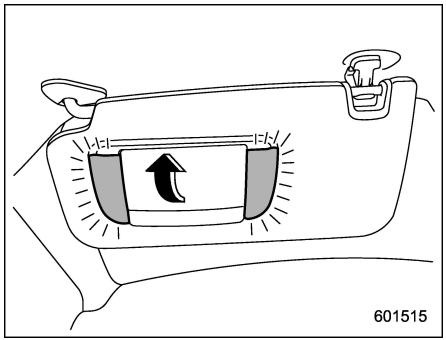

To use the vanity mirror, swing down the sun visor and open the vanity mirror cover. The lights beside the vanity mirror illuminate when the mirror cover is opened.

NOTE

Use of the vanity mirror light for a long period of time while the engine is not running can cause battery discharge.

6-3. Storage Compartment

CAUTION

- **Always keep the storage compartment closed while driving to reduce the risk of injury in the event of sudden stops or an accident.**
- **Do not store the following items in the storage compartment. Otherwise, it may cause a fire or accident.**
  - **Spray cans, containers with flammable or corrosive liquids or any other dangerous items.**
  - **Plastic or other heat-vulnerable or flammable articles such as a lighter.**

■ Glove Box

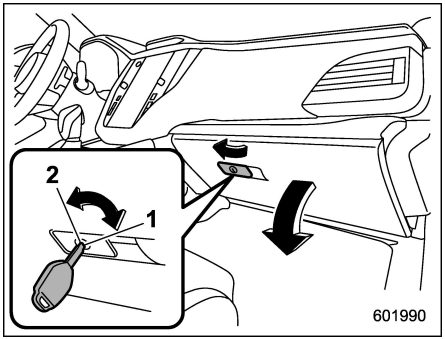

1) Lock
2) Unlock

To open the glove box, pull the handle. To close it, push the lid firmly upward.

To lock the glove box, insert the key and turn it clockwise. To unlock the glove box, insert the key and turn it counterclockwise.

For models with “keyless access with push-button start system”, use the emergency key to lock or unlock the glove box.

NOTE

The emergency key is directional. If the key cannot be inserted, change the direction that the grooved side is facing and insert it again.

■ Center Console

The center console box provides a storage space.

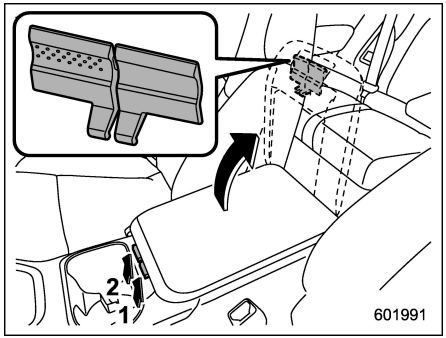

1) Upper lid opening lever
2) Upper and lower lid opening lever (dotted surface)

The center console box has a two-layer structure consisting of an upper compartment and lower compartment.

■ Overhead Console

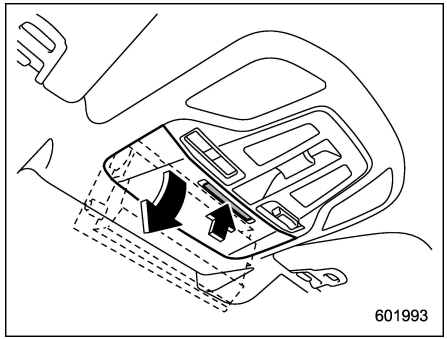

To open the console, push on the lid lightly and it will automatically open.

⚠ WARNING

Do not use the overhead console while driving. Doing so may distract you from the road conditions ahead and cause an accident that may result in serious injury or death.

⚠ CAUTION

- **Before operating this vehicle, ensure that the overhead console is closed.**
- **When your vehicle is parked in**

– CONTINUED –

the sun or on a warm day, the inside of the overhead console heats up. Avoid storing plastic or other heat vulnerable or flammable articles such as a lighter in the overhead console.

- **Do not pull the lid when opening the overhead console.**

  There is the risk that the overhead console may be damaged.

6-4. Cup Holder

CAUTION

Take care to avoid spills. Beverages, if hot, might burn you and/or your passengers. Spilled beverages may also damage upholstery, carpets or audio equipment.

■ Front Passenger's Cup Holder

CAUTION

- **Do not pick up a cup from the cup holder or put a cup in the holder while you are driving, as this may distract you and lead to an accident.**
- **Take care not to spill a beverage on the select lever or any switch(es) in the adjacent area. If the beverage is spilled, it may cause a malfunction of the select lever and/or switch(es).**

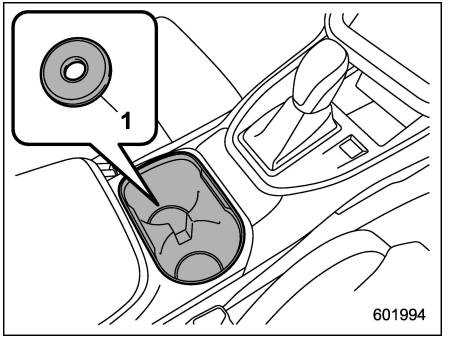

1) Spacer

The dual cup holder is built into the center console.

Place a spacer in it before putting in a small cup or can.

■ Rear Passenger's Cup Holder

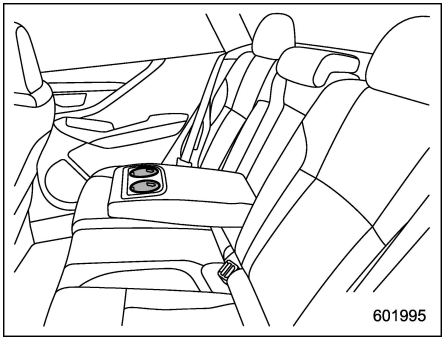

A dual cup holder is built into the armrest.

CAUTION

When a cup containing a beverage is in the cup holder, do not fold down or recline any seat. Otherwise, the beverage could spill while driving and, if the beverage is hot, it could burn you and/or your passengers.

6-5. Bottle Holders

CAUTION

- **Do not pick up a bottle from the bottle holder or put a bottle in the holder while you are driving, as this may distract you and lead to an accident.**
- **When placing a beverage in a bottle holder, make sure it is capped. Otherwise, the beverage could spill when opening/closing the door or while driving and, if the beverage is hot, it could burn you and/or your passengers.**

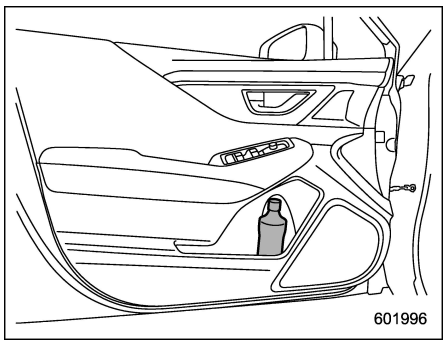

The bottle holder equipped on each door trim can be used to hold beverage bottles and other items.

6-6. Accessory Power Outlets

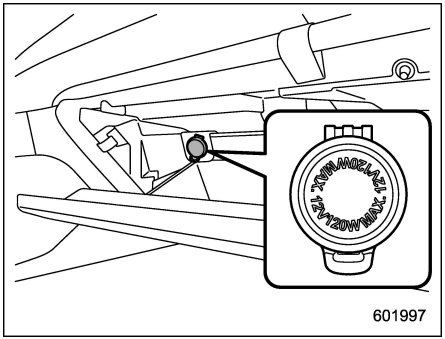

Power outlet in the glove box

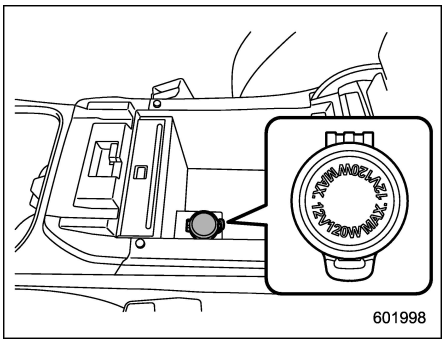

Power outlet in the center console (if equipped)

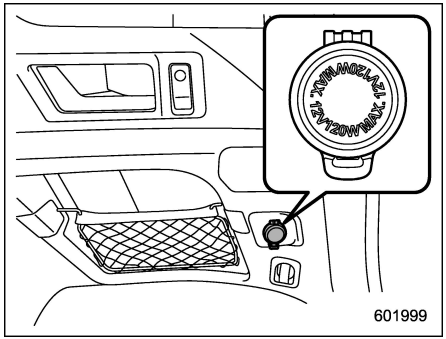

Power outlet in the cargo area (Outback)

Accessory power outlets are provided in the glove box, center console and cargo area. Electrical power (12 V DC) from the battery is available at any of the outlets when the ignition switch is in either the “ACC” or “ON” position.

You can use an in-vehicle electrical appliance by connecting it to an outlet.

The maximum power rating of an appliance that can be connected is **120 W**. Do not use an appliance which exceeds the indicated wattage for each outlet.

When using appliances connected to two or more outlets simultaneously, the total power consumed by them must not exceed 120 W.

CAUTION

- **Do not attempt to use a cigarette lighter in the accessory power outlet.**
- **Do not place any foreign objects, especially metal ones such as coins or aluminum foil, into the accessory power outlet. That could cause a short circuit. Always put the cap on the accessory power outlet when it is not in use.**
- **Use only electrical appliances which are designed for 12 V DC.**

  The maximum power rating of an appliance that can be connected is 120 W. Do not use an appliance which exceeds the indicated wattage for each outlet.

  When using appliances connected to two or more outlets simultaneously, the total power consumed by them must not exceed 120 W. Overloading the accessory power outlet can cause a short circuit. Do not use double adapters or more than one electrical appliance.
- **If the plug on your electric appliance is either too loose or too**

tight for the accessory power outlet, this can result in a poor contact or cause the plug to get stuck. Only use plugs that fit properly.

- Use of an electric appliance in the accessory power outlet for a long period of time while the engine is not running can cause battery discharge.
- Before driving your vehicle, make sure that the plug and the cord on your electrical appliance will not interfere with your shifting gears and operating the accelerator and brake pedals. If they do, do not use the electrical appliance while driving.

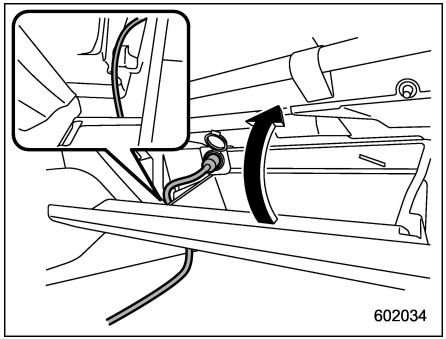

Power outlet in the glove box

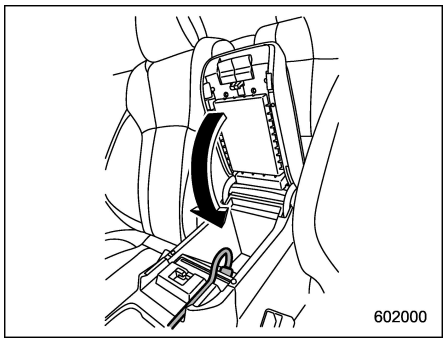

Power outlet in the center console (if equipped)

NOTE

The power outlets in the center console and the glove box can be used even when the lid is closed, because there are gaps that allow the cords to come out. Pass the cord of the electrical appliance through this gap.

6-7. USB Power Supply

CAUTION

- The specification of a USB terminal that can be used is the A-type. If a different specification of terminal is connected, power supply or charging may not be possible, or the device may malfunction.
- There is a risk that a connected device may malfunction or data may be damaged. The connection of a device shall be performed at your responsibility.
- To avoid an electric shock or a malfunction, observe the following precautions.
  - Do not connect a USB hub.
  - Do not insert any metal or other foreign object into the USB terminal.
  - Do not spill water or other liquid on the USB terminal.
- Be careful not to pull the connected cable. Doing so could break the USB terminal and the connected device.
- If a device is connected for a long time when the engine is not running, doing so may cause the risk of a discharged battery. Even when the engine is running, we recommend that you do not connect a device for an unnecessarily long time.
- Do not connect a malfunctioning device. Doing so may cause the risk of smoke and fire.

NOTE

- The rated voltage of each USB terminal is 5 V/2.1 A (total 4.2 A). For details about the maximum rated power, refer to "How to Use the USB Power Supply" ☞P304. Before connecting a device, be sure to read the instruction manual of the device and check whether or not this specification of the output is supported by the device. If a device that requires power exceeding the maximum rating is connected, power supply or charging may not be possible. Even if charging could be completed, the time required for charging may be longer than when the genuine charger for that device is used.
- Depending on the device, charging may be possible only when a special cable is used. In this case, be sure to connect the device using the special cable.
- When a device that communicates with a PC is connected, power supply or charging may not be possible.
- When connect a device for charging, disconnect the device promptly after charging is completed.

■ How to Use the USB Power Supply

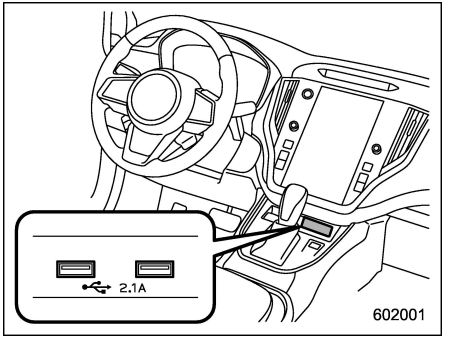

Front seat USB power supply (an audio device can be connected and used)

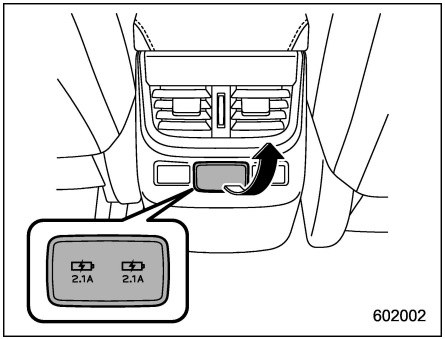

Console USB power supply (charge only) (if equipped)

Use the USB terminal to use or charge an electronic device.

When using the USB, open the USB power supply cover. After use, close it.

When the ignition switch is in the “ACC” or “ON” position, the power can be supplied to the electronic device. Up to 5 V/2.1 A can be supplied from each terminal (total of 4.2 A).

6-8. Assist Grip

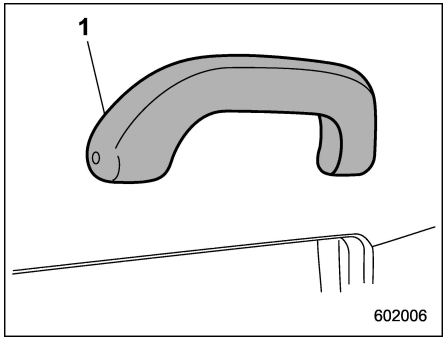

1) Assist grip

The assist grip is to be held to support the body of the passengers when they are in the seat and the vehicle is moving.

WARNING

Do not hold the assist grip when getting up from the seat. Holding and pulling the assist grip in the wrong way could break the grip and possibly cause injury.

CAUTION

Do not attach heavy objects to the assist grip. Doing so could break it and damage the object.

6-9. Coat Hook

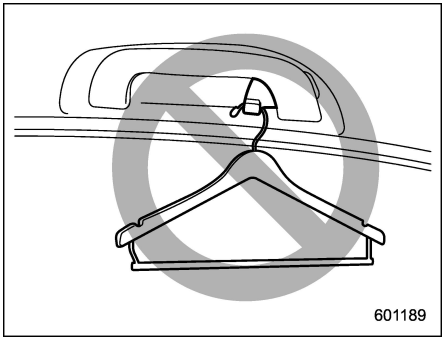

WARNING

Obey the following instructions.

- **Do not hang coat hangers or other hard or pointed objects on the coat hooks. Hang clothing directly on the coat hooks without using hangers.**
- **Before hanging clothing on the coat hooks, make sure there are no pointed objects in the pockets.**

If these instructions are ignored, the following may occur in sudden stops or in a collision.

- **Serious injuries by the items thrown through the cabin.**
- **Incorrect SRS curtain airbag deployment**

CAUTION

Never hang anything on the coat hook that might obstruct the driver's view or that could cause injury in sudden stops or in a collision. And do not hang items on the coat hook that weigh 11 lbs (5 kg) or more.

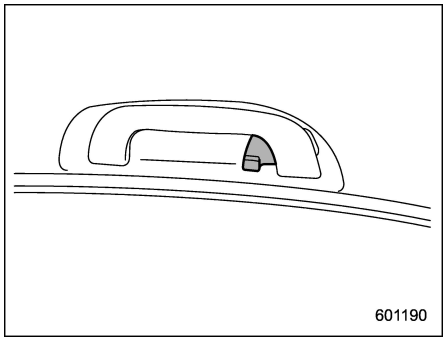

The coat hook is attached to each rear passenger's assist grip.

6-10. Shopping Bag Hook

CAUTION

Do not hang items on the shopping bag hook that weigh 11 lbs (5 kg) or more.

■ Legacy

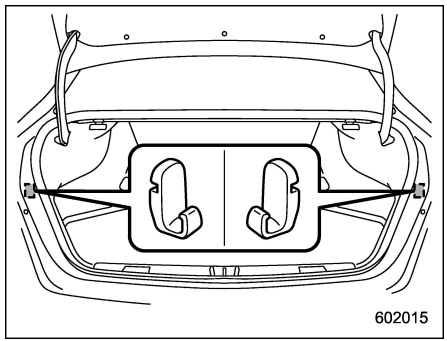

A shopping bag hook is attached to each inner side wall of the trunk near the trunk lid opening.

■ Outback

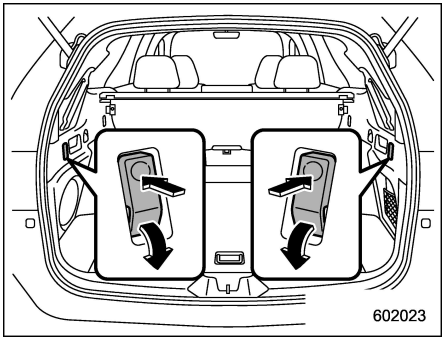

A shopping bag hook is attached to each side of the cargo area.

To use the hook, push the upper portion and the shopping bag hook will appear.

Store the hook after using it.

6-11. Floor Mat

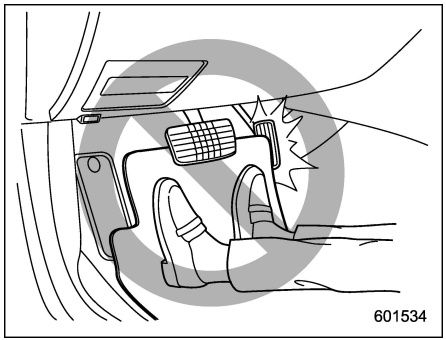

⚠ CAUTION

If the floor mat slips forward and interferes with the movement of the pedals during driving, it could cause an accident. Observe the following precautions to prevent the floor mat from slipping forward.

- **Be sure to use a genuine SUBARU floor mat designed with grommets in the correct locations.**
- **Make sure that the driver's floor mat is placed back in its proper location and is correctly secured on its retaining pins.**
- **Do not use more than one floor mat.**

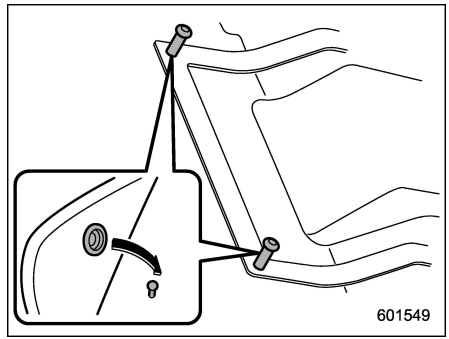

Retaining pins are located on the driver's side floor.

The floor mat should be properly secured using the built-in grommets, by placing the grommets over the pins and pushing them downward.

6-12. Lifting Cargo Cover (Outback – If Equipped)

The Lifting Cargo Cover is provided to cover the cargo area and to protect its contents from direct sunlight.

The cover also has the practicability of its easy lift-up function, eliminating the need to rewind the cover all the way when accessing the cargo.

This cover can be detached to make room for additional cargo.

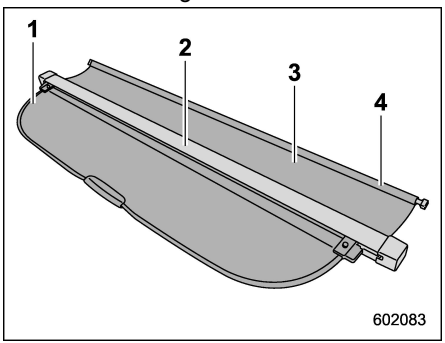

1) Cargo area cover
2) Cover housing
3) Front cover
4) Front cover rod

■ To Install the Cover Housing

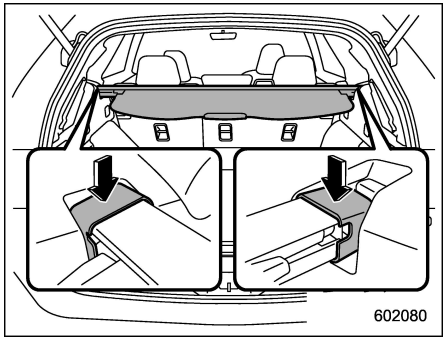

1. Insert the left side cover housing end into the retainer, then insert the right cover housing end into the right retainer.

Make sure both ends are clicked into the retainers.

NOTE

If the label on the cover housing is placed on the top, the cover housing will be installed in reverse and it will not be affixed to the vehicle body.

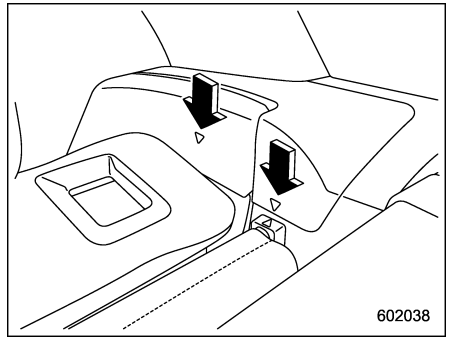

2. Align the right side of the front cover rod end with a triangle mark on the cargo area trim.

NOTE

When the rear seat backs are reclined, align the front cover rod to the rear triangle mark.

3. Push the front cover rod on the right side against the cargo area trim to shorten the front cover rod.

4. Once the right side is aligned, align the left side to a triangle mark on the cargo area trim to fix the front cover in place.

⚠ CAUTION

When reclining the rear seatback, move the front cover backward so

that the cover is not damaged

■ Using the Cover

⚠ WARNING

Do not place anything on the extended cover. Putting excessive weight on the extended cover can break it and the object on the cover could tumble forward in the event of a sudden stop or collision. This could cause serious injury.

⚠ CAUTION

Be careful not to scratch the rear gate stays while extending and rewinding the cover. Scratches on the stays could cause leakage of gas from the stays, which may result in their inability to hold the rear gate open.

▼ To extend the cover

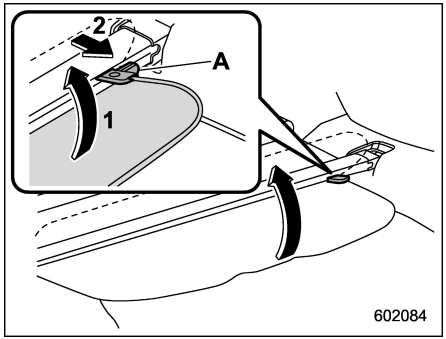

A Stopper
1) Tilt up
2) Pull out

1. Hold the cover by the handle in the center, tilt it up and pull it out to free the stoppers.

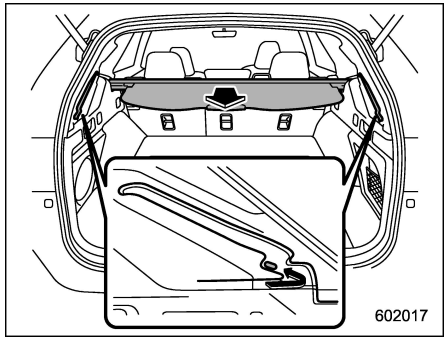

2. Pull out the cover by the handle in the center to extend it. Then insert the stoppers into the catches as shown.

▼ To rewind the cover

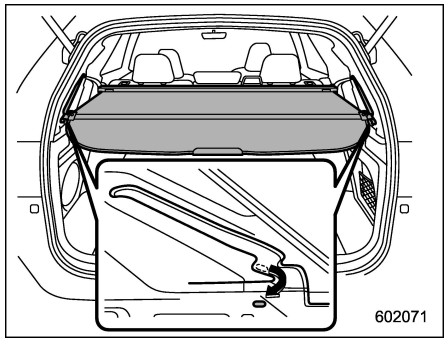

1. Hold the cover by the handle in the

– CONTINUED –

center and pull it toward you, then slightly lower it to free the stoppers in the catches.

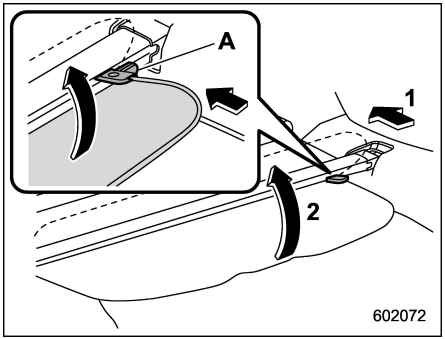

A) Stopper
1) Rewind
2) Tilt up

2. Slowly rewind the cover completely. Then tilt the cover up by the handle to hook the stoppers.

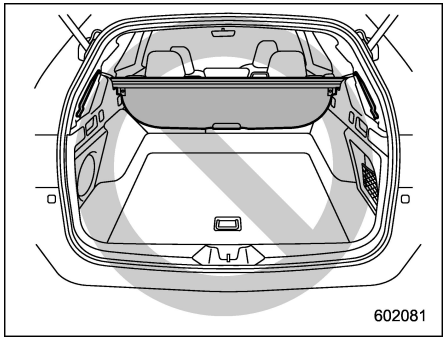

CAUTION

Do not leave the cover dangling. Make sure the stoppers are hooked on to the cover housing. Otherwise the cover may be torn and damaged.

▼ **To lift the cover**

CAUTION

Do not drive with the cover lifted up. Doing so could obstruct the rearward view.

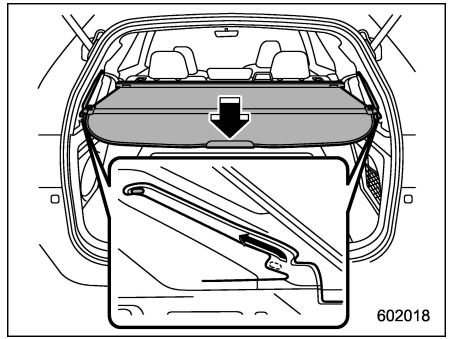

1. Push down the handle in the center to lift the cover up.

The stoppers will slide up the grooves and stop at the top.

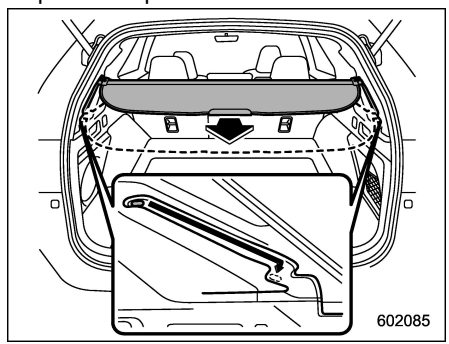

2. To lower the lifted cover, hold the cover by the handle and pull it back into to the

catches.

■ To Remove the Cover Housing

1. Slowly rewind the cover completely. Then tilt the cover up by the handle to hook the stoppers.
2. Push the front cover rod on the right side against the cargo area trim to shorten the front cover rod.

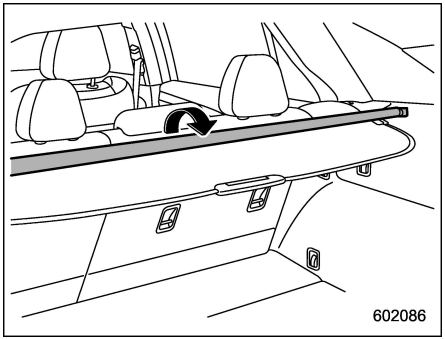

3. Remove the front cover and place it on the cover housing.

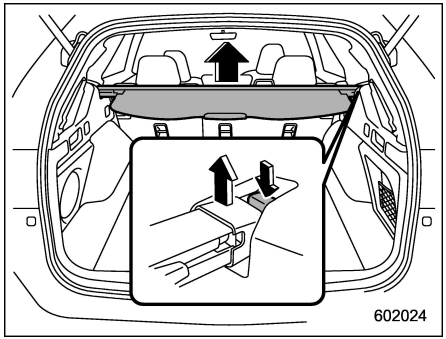

4. Hold down the button on the right-hand cargo area trim and lift up the right-hand cover housing end.
5. Gently slide the left-hand cover end out to the right then remove the cover housing.

■ To Stow the Cover

The cover can be stowed in the under-floor storage.

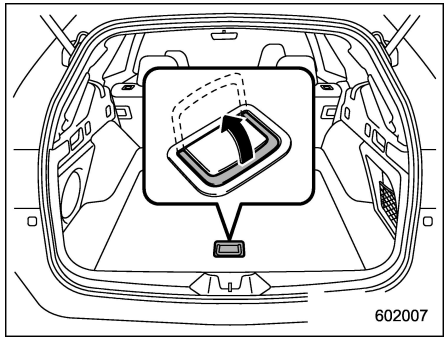

1. To open the cargo floor lid, pull the handle up.

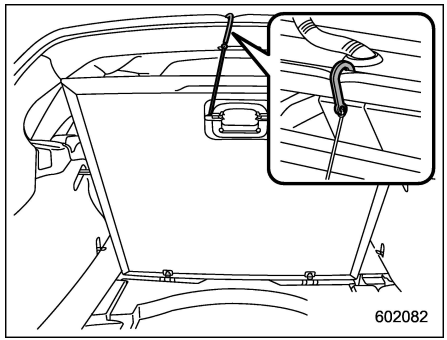

2. Use the hook provided on the back to hang the cargo floor lid open.

The hook can be hanged onto the opening of the rear gate.

– CONTINUED –

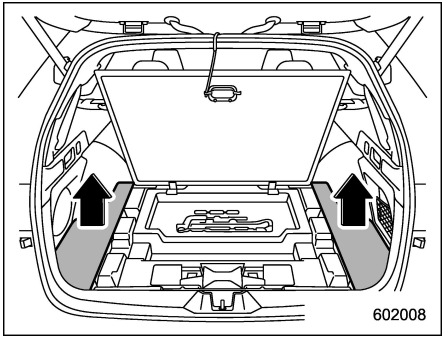

3. Remove the left and right corners of the cargo floor lid.

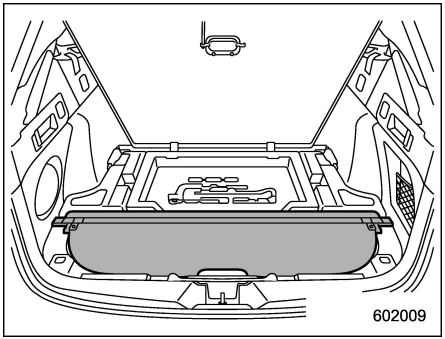

4. Stow the cover housing in the cargo area under-floor storage.

NOTE

To make enough room for the cover when stowing, first insert the right-hand side into the ditch on the cargo area trim.

■ To Take Out the Stowed Cover

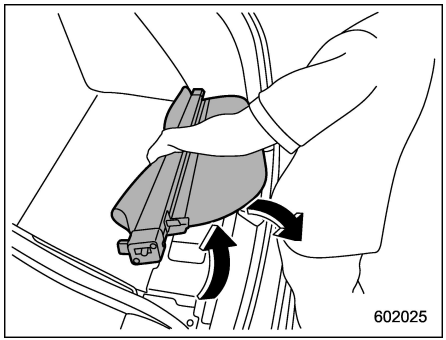

1. Raise the cover.
2. Take out the cover housing by lifting it toward you.

6-13. Convenient Tie-Down Hooks (Outback)

⚠ CAUTION

The convenient tie-down hooks are designed only for securing light cargo. Never try to secure cargo that exceeds the capacity of the hooks. The maximum load capacity is 110 lbs (50 kg) per hook.

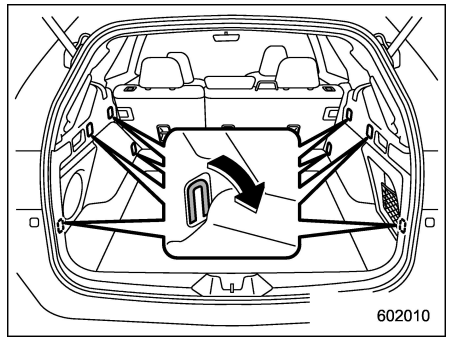

The cargo area is equipped with several tie-down hooks so that cargo can be secured with a luggage net or ropes.

When using the tie-down hooks, turn them down out of the storing recesses. When not in use, put the hooks up into the storing recesses.

6-14. Adjustable Storage Net (Outback)

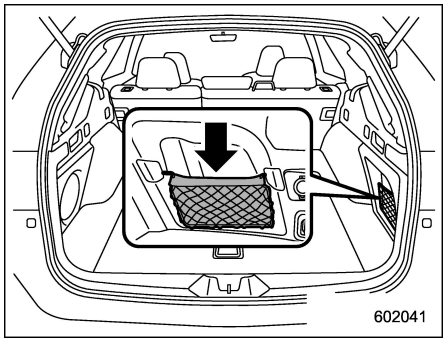

There is an adjustable storage net in the cargo area. Push the net downward to expand the cargo area.

6-15. Under-Floor Storage Compartment

The subfloor storage compartment is located under the floor of the trunk or cargo area and can be used to store small items. To open the lid, pull the tab or handle up.

NOTE

When storing a flat tire, put the subfloor storage in the trunk or cargo area.

CAUTION

- **Always keep the lid of the subfloor storage compartment closed while driving to reduce the risk of injury in the event of sudden stop or an accident.**
- **Do not store spray cans, containers with flammable or corrosive liquids or any other dangerous items in the subfloor storage compartment.**

– CONTINUED –

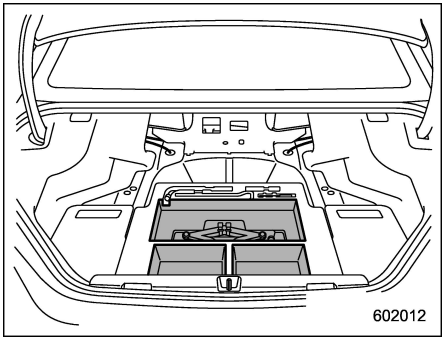

Legacy

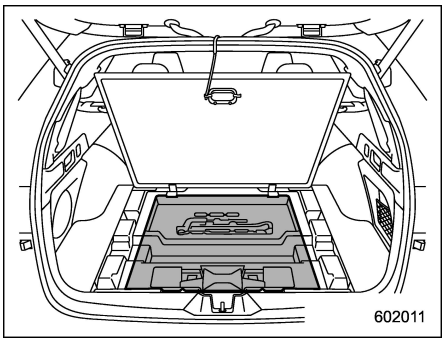

Outback

For Outback, hang the hook provided on the underside of the lid on the rear edge of the roof to keep the lid open.

NOTE

The lid cannot be hooked while the Lifting Cargo Cover is being used. Rewind the cover completely to open the lid.

7-1. Fuel 317
Fuel Requirements 317
Fuel Filler Lid and Cap 319
7-2. State Emission Testing (U.S. Only) 322
7-3. Preparing to Drive 324
7-4. Starting and Stopping the Engine (Models without Push-Button Ignition Switch) 324
General Precautions When Starting/Stopping Engine 324
Starting Engine 325
Stopping the Engine 326
Steering Lock 326
7-5. Starting and Stopping Engine (Models with Push-Button Start System) 327
Safety Precautions 327
Operating Range for Push-Button Start System 327
Starting Engine 327
Stopping Engine 328
When Access Key Fob Does Not Operate Properly 329
Steering Lock 329
7-6. Remote Engine Start System (Dealer Option) 330
Remote Engine Starter Transceiver (Fob) 330
Alternate Operation Method for Models with “Keyless Access with Push-Button Start System” 333
Entering the Vehicle While It Is Running via Remote Start 333
Entering the Vehicle Following Remote Engine Start Shutdown 334
Pre-heating or Pre-cooling the Interior of the Vehicle 334
Remote Transmitter Program (Remote Engine Starter Transceiver) 334
System Maintenance 334
Certification for Remote Engine Starter 336
7-7. Continuously Variable Transmission 336
Select Lever 337
Shift Lock Function 339
Selection of Manual Mode 340
Driving Tips 341
7-8. SI-DRIVE (If Equipped) 342
Intelligent (I) Mode 342
Sport Sharp (S#) Mode 342
SI-DRIVE Switches 343
7-9. Power Steering 343
7-10. Braking 344
Braking Tips 344
Brake System 345
Disc Brake Pad Wear Warning Indicators 345
7-11. ABS (Anti-Lock Brake System) 346
ABS Self-Check 346
ABS Warning Light 346
7-12. Electronic Brake Force Distribution (EBD) System 346
EBD System Malfunctions 347
7-13. Vehicle Dynamics Control System 347
Vehicle Dynamics Control System Monitor 349
To Turn On/Off the Vehicle Dynamics Control System 349

7-14. X-MODE (Outback) 350
To Activate/Deactivate the X-MODE 351
Hill Descent Control Function 351
7-15. Tire Pressure Monitoring System (TPMS) (U.S. Spec. Models) 353
TPMS Screen 354
7-16. Parking Your Vehicle 355
Electronic Parking Brake 355
Parking Tips 360
7-17. Auto Start Stop System 361
System Operation 361
Displaying the Auto Start Stop System Status 365
System Warning 365
7-18. Front View Monitor (If Equipped) 366
How to Access the Front View Monitor 366
How to Cancel the Front View Monitor 367
Range of Image on Screen 367
Guiding Line 368
Handling of Camera 368
7-19. Rear View Camera 369
How to Use the Rear View Camera 370
Viewing Range on the Screen 371
Help Lines 372
7-20. BSD/RCTA (If Equipped) 374
System Features 374
System Operation 376
BSD/RCTA Approach Indicator Light/Warning Buzzer 377
BSD/RCTA OFF Indicator 379
BSD/RCTA Warning Indicator 380
To Turn On/Off the BSD/RCTA 380
Certification for the BSD/RCTA 380
Handling of Radar Sensors 382
7-21. Reverse Automatic Braking System (If Equipped) 383
Reverse Automatic Braking System Overview 384
Operating Conditions 385
Object Detection Warning Function 389
Reverse Automatic Braking Function Operation 390
Canceling the Reverse Automatic Braking System Operation 392
Reverse Automatic Braking System ON/OFF Setting 392
RAB Warning Indicator 393
Handling of the Sonar Sensors 393
7-22. Driver Monitoring System (If Equipped) 394
User Recognition Function 398
Inattentive/Drowsy Driving Warning 400
Driver Monitoring System Indicator/Warning 402
Using the Driver Monitoring System 402
Registering and Deleting a User 404
Registering and Deleting Driver Position Personalization 404
Driver Monitoring System ON/OFF Settings 404
Certification for Driver Monitoring System U.S.-Spec. Models 405

7-1. Fuel

CAUTION

- **Use of a fuel which is low in quality or use of an inappropriate fuel additive may cause damage to the engine and/or fuel system.**
- **Some gas stations, particularly those in high altitude areas, offer fuels posted as regular octane gasoline with an octane rating below 87AKI (90RON). Use of those fuels are not recommended.**

■ Fuel Requirements

The engine is designed to operate using **unleaded gasoline** with an octane rating of **87 AKI (90 RON) or higher**.

▼ Fuel octane rating

Using a gasoline with a lower octane rating can cause persistent and heavy knocking, which can damage the engine. Do not be concerned if your vehicle sometimes knocks lightly when you drive up a hill or when you accelerate. See your dealer or a qualified service technician if you use a fuel with the specified octane rating and your vehicle knocks heavily or persistently.

▽ RON

This octane rating is the Research Octane Number.

▽ AKI

This octane rating is the average of the Research Octane and Motor Octane numbers and is commonly referred to as the Anti Knock Index (AKI).

▼ Unleaded gasoline

The neck of the fuel filler pipe is designed to accept only an unleaded gasoline filler nozzle. Under no circumstances should leaded gasoline be used because it will damage the emission control system and may impair driveability and fuel economy.

▼ Reformulated gasoline

SUBARU supports the use of reformulated gasoline when available. Reformulated gasoline has been blended to burn more cleanly and reduce vehicle emissions.

▼ MMT

Some gasoline contains an octane-enhancing additive called MMT (Methylcyclopentadienyl Manganese Tricarbonyl). If you use such fuels, your emission control system performance may deteriorate and the CHECK ENGINE warning light/malfunction indicator light may turn on. If this happens, return to your authorized SUBARU Dealer for service. If it is determined that the condition is caused by the type of fuel used, repairs may not be covered by your warranty.

▼ Gasoline for cleaner air (2.4 L model)

Your use of gasoline with detergent additives will help prevent deposits from forming in your engine and fuel system. This helps keep your engine in tune and your emission control system working properly, and is a way of doing your part for cleaner air. If you continuously use a high quality fuel with the proper detergent and other additives, you should never need to add any fuel system cleaning agents to your fuel tank.

Many gasolines are now blended with materials called oxygenates. Use of these fuels can also help keep the air cleaner. Oxygenated blend fuels, such as ethanol (ethyl or grain alcohol) may be used in your vehicle, but should contain no more than 15% ethanol for the proper operation of your SUBARU.

Do not use any gasoline that contains more than 15% ethanol, including from any pump labeled E30, E50 or E85 (which are only some examples of fuel containing more than 15% ethanol).

– CONTINUED –

In addition, some gasoline suppliers are now producing reformulated gasolines, which are designed to reduce vehicle emissions. SUBARU approves the use of reformulated gasoline.

If you are not sure what the fuel contains, you should ask your service station operators if their gasolines contain detergents and oxygenates and if they have been reformulated to reduce vehicle emissions.

As additional guidance, only use fuels suited for your vehicle as explained in the following description.

- Fuel should be unleaded and have an octane rating no lower than that specified in this manual.
- Methanol (methyl or wood alcohol) is sometimes mixed with unleaded gasoline. Methanol can be used in your vehicle **ONLY** if it does not exceed 5% of the fuel mixture **AND** if it is accompanied by sufficient quantities of the proper cosolvents and corrosion inhibitors required to prevent damage to the fuel system. Do not use fuel containing methanol **EXCEPT** under these conditions.
- If undesirable driveability problems are experienced and you suspect they may be fuel related, try a different brand of gasoline before seeking service at your SUBARU dealer.
- Fuel system damage or driveability problems which result from the use of improper fuel are not covered under the SUBARU Limited Warranty.

▼ Gasoline for cleaner air (2.5 L model)

Your use of gasoline with detergent additives will help prevent deposits from forming in your engine and fuel system. This helps keep your engine in tune and your emission control system working properly, and is a way of doing your part for cleaner air. If you continuously use a high quality fuel with the proper detergent and other additives, you should never need to add any fuel system cleaning agents to your fuel tank.

Many gasolines are now blended with materials called oxygenates. Use of these fuels can also help keep the air cleaner. Oxygenated blend fuels, such as ethanol (ethyl or grain alcohol) may be used in your vehicle, but should contain no more than 10% ethanol for the proper operation of your SUBARU.

Do not use any gasoline that contains more than 10% ethanol, including from any pump labeled E15, E30, E50 or E85 (which are only some examples of fuel containing more than 10% ethanol).

In addition, some gasoline suppliers are now producing reformulated gasolines, which are designed to reduce vehicle emissions. SUBARU approves the use of reformulated gasoline.

If you are not sure what the fuel contains, you should ask your service station operators if their gasolines contain detergents and oxygenates and if they have been reformulated to reduce vehicle emissions.

As additional guidance, only use fuels suited for your vehicle as explained in the following.

- Fuel should be unleaded and have an octane rating no lower than that specified in this manual.
- Methanol (methyl or wood alcohol) is sometimes mixed with unleaded gasoline. Methanol can be used in your vehicle **ONLY** if it does not exceed 5% of the fuel mixture **AND** if it is accompanied by sufficient quantities of the proper cosolvents and corrosion inhibitors required to prevent damage to the fuel system. Do not use fuel containing methanol **EXCEPT** under these conditions.
- If undesirable driveability problems are experienced and you suspect they may be fuel related, try a different brand of gasoline before seeking service at your

SUBARU dealer.

- Fuel system damage or driveability problems which result from the use of improper fuel are not covered under the SUBARU Limited Warranty.

■ Fuel Filler Lid and Cap

▼ Locations of the fuel filler lid

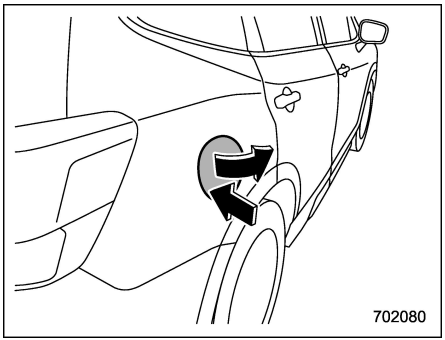

▼ Refueling

Only one person should be involved in refueling. Do not allow others to approach the area of the vehicle near the fuel filler pipe while refueling is in progress.

Be sure to observe any other precautions that are posted at the service station.

1. To unlock the fuel filler lid, perform one of the operations below.
   – Press the "🔒" button on the key fob.
   – Press the unlock side of the power door locking switch.
   – Turn the ignition switch to "ACC" or "LOCK"/"OFF".
2. Push the rear side of the fuel filler lid.
3. The fuel filler lid opens automatically. Open it further by hand.

⚠ WARNING

Before opening the fuel filler cap, first touch the vehicle body or a metal portion of the fuel pump or similar object to discharge any static electricity that may be present on your body. If your body is carrying an electrostatic charge, there is a possibility that an electric spark could ignite the fuel, which could burn you. To avoid acquiring a new static electric charge, do not get back into the vehicle while refueling is in progress.

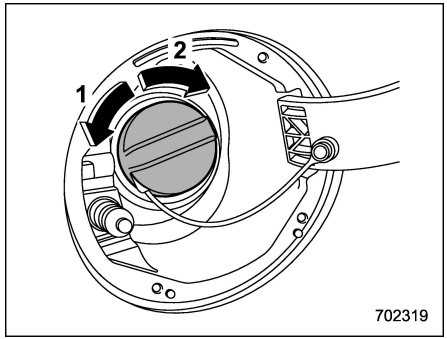

1) Open
2) Close

4. Remove the fuel filler cap by turning it slowly counterclockwise.

⚠ WARNING

- **Gasoline vapor is highly flammable. Before refueling, always turn the ignition switch to the "LOCK"/"OFF" position first and then close all vehicle doors and windows. Make sure that there are no lighted cigarettes, open flames or electrical sparks in the adjacent area. Only handle fuel outdoors. Quickly wipe up any spilled fuel.**
- **When opening the cap, grasp it**

– CONTINUED –

firmly and turn it slowly to the left. Do not remove the cap quickly. Fuel may be under pressure and spray out of the fuel filler neck, especially in hot weather. If you hear a hissing sound while you are removing the cap, wait for the sound to stop and then slowly open the cap to prevent fuel from spraying out and creating a fire hazard.

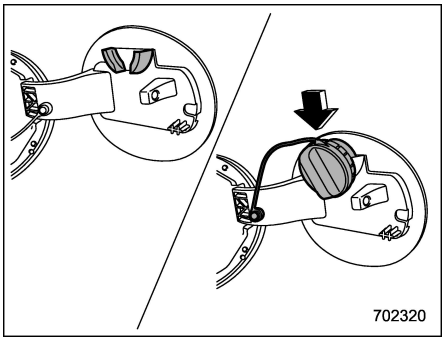

5. Set the fuel filler cap on the cap holder inside the fuel filler lid.

⚠ WARNING

- **When refueling, insert the fuel nozzle securely into the fuel filler pipe. If the nozzle is lifted or not fully inserted, its automatic stopping mechanism may not function, causing fuel to overflow the tank and creating a fire hazard.**
- **Stop refueling when the automatic stop mechanism on the fuel nozzle activates. If you continue to add fuel, temperature changes or other conditions may cause fuel to overflow from the tank and create a fire hazard.**

6. Stop filling the tank after the fuel filler pump automatically stops. Do not add any more fuel.
7. Put the cap back on and turn it clockwise until you hear a clicking noise. Be certain not to catch the tether under the cap while tightening.

⚠ CAUTION

Make sure that the cap is tightened until it clicks to prevent fuel spillage in the event of an accident.

8. Close the fuel filler lid completely.

⚠ CAUTION

Do not let fuel spill on the exterior surfaces of the vehicle. Because fuel may damage the paint, be sure to wipe off any spilled fuel quickly. Paint damage caused by spilled fuel is not covered under the SUBARU Limited Warranty.

NOTE

- **You will see the "⛽▶" sign in the fuel gauge. This indicates that the fuel filler lid is located on the right side of the vehicle.**
- **If the fuel filler cap is not tightened until it clicks or if the tether is caught under the cap, the CHECK ENGINE warning light/malfunction indicator light may illuminate. Refer to "CHECK ENGINE Warning Light/Malfunction Indicator Light" ☞P178.**
- **To lock the fuel filler lid, perform one of the operations below. However if these operations are performed when the fuel filler lid is open, the fuel filler lid will not lock when it is subsequently closed.**
  - **Press the "🔒" button on the key fob.**
  - **Press the lock side of the power door locking switch.**
- **When the doors are locked or unlocked using the automatic door lock system, the fuel filler lid will be locked**

or unlocked at the same time.

CAUTION

- **Never add any cleaning agents to the fuel tank. The addition of a cleaning agent may cause damage to the fuel system.**
- **After refueling, turn the cap to the right until it clicks to ensure that it is fully tightened. If the cap is not securely tightened, fuel may leak out while the vehicle is being driven or fuel spillage could occur in the event of an accident, creating a fire hazard.**
- **Do not let fuel spill on the exterior surfaces of the vehicle. Because fuel may damage the paint, be sure to wipe off any spilled fuel quickly. Paint damage caused by spilled fuel is not covered under the SUBARU Limited Warranty.**
- **Always use a genuine SUBARU fuel filler cap. If you use the wrong cap, it may not fit or have proper venting and your fuel tank and emission control system may be damaged. It could also lead to fuel spillage and a fire.**
- **Immediately put fuel in the tank whenever the low fuel warning light illuminates. Engine misfires as a result of an empty tank could cause damage to the engine. Continuing to operate your vehicle at an extremely low fuel level may result in a reduction of engine performance.**

▼ If the fuel filler lid cannot be opened (Legacy)

If the fuel filler lid cannot be opened due to a malfunction or a dead battery, it can be opened from the trunk.

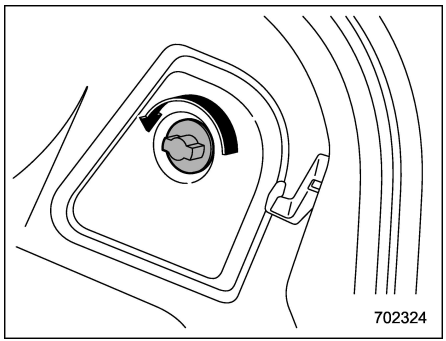

1. Remove the access cover at the right-side of the trunk trim.

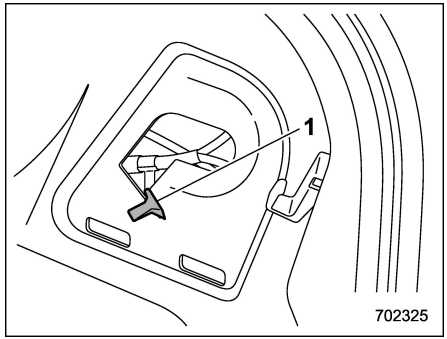

1) Clip

2. Remove the yellow clip from the trim.

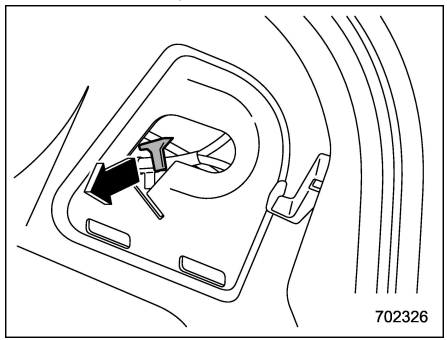

3. Pull the yellow clip to unlock the fuel filler lid.

– CONTINUED –

▼ **If the fuel filler lid cannot be opened (Outback)**

If the fuel filler lid cannot be opened due to a malfunction or a dead battery, it can be opened from the cargo area.

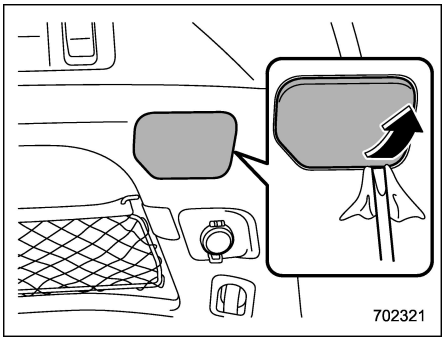

1. Remove the access cover at the right-side of the cargo area trim using a flat-head screwdriver.

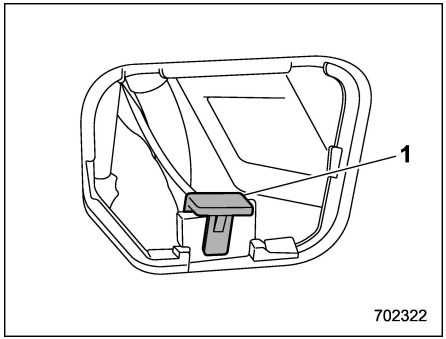

1) Clip

2. Remove the yellow clip from the trim.

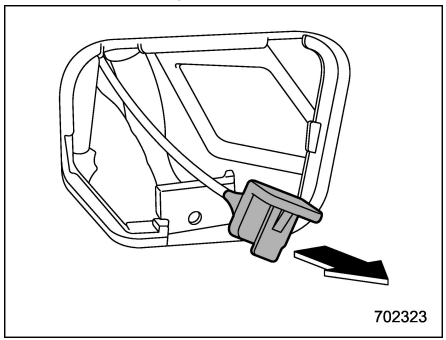

3. Pull the yellow clip to unlock the fuel filler lid.

7-2. State Emission Testing (U.S. Only)

⚠ WARNING

Only use a four-wheel dynamometer when testing an All-Wheel Drive (AWD) model.

Testing of an AWD model must NEVER be performed on a single two-wheel dynamometer. Attempting to do so will result in uncontrolled vehicle movement and may cause an accident or injuries to persons nearby.

⚠ CAUTION

- **At state inspection time, remember to tell your inspection or service station in advance not to place your SUBARU AWD vehicle on a two-wheel dynamometer. Otherwise, serious transmission damage will result.**
- **Resultant vehicle damage due to improper testing is not covered under the SUBARU Limited Warranty and is the responsibility of the state inspection program or**

its contractors or licensees.

California and a number of federal states have Inspection/Maintenance programs to inspect your vehicle's emission control system. If your vehicle does not pass this test, some states may deny renewal of your vehicle's registration.

Your vehicle is equipped with a computer that monitors the performance of the engine's emission control system. Certified emission inspectors will inspect the On-Board Diagnostic (OBDII) system as part of the state emission inspection process. The OBDII system is designed to detect engine and transmission problems that might cause the vehicle emissions to exceed allowable limits. OBDII inspections apply to all 1996 model year and newer passenger cars and trucks. Over 30 states plus the District of Columbia have implemented emission inspection of the OBDII system.

- The inspection of the OBDII system consists of a visual operational check of the "**CHECK ENGINE**" warning light/malfunction indicator light (MIL) and an examination of the OBDII system with an electronic scan tool.
- A vehicle passes the OBDII system inspection if proper operation of the "**CHECK ENGINE**" warning light is observed, there are no stored diagnostic trouble codes, and the OBDII readiness monitors are all complete.
- A vehicle fails the OBDII inspection if the "**CHECK ENGINE**" warning light is not properly operating (light is illuminated or is not working due to a burned out bulb) or there is one or more diagnostic trouble codes stored in the vehicle's computer.
- A state emission inspection may reject (not pass or fail) a vehicle if the number of OBDII system readiness monitors "**NOT READY**" is greater than one. If the vehicle's battery has been recently replaced or disconnected, the OBDII system inspection may indicate that the vehicle is not ready for the emission test. Under this condition, the vehicle driver should be instructed to drive his/her vehicle for a few days to reset the readiness monitors and return for an emission re-inspection.
- Owners of rejected or failing vehicles should contact their SUBARU Dealer for service.

Some states still use dynamometers in their emission inspection program. A dynamometer is a treadmill or roller-like testing device that allows your vehicle's wheels to turn while the vehicle remains in one place. Prior to your vehicle being put on a dynamometer, tell your emission inspector not to place your SUBARU AWD vehicle on a two-wheel dynamometer. **Otherwise, serious transmission damage will result.**

The U.S. Environmental Protection Agency (EPA) and states using two-wheel dynamometers in their emission testing program have EXEMPTED SUBARU AWD vehicles from the portion of the testing program that involves a two-wheel dynamometer. There are some states that use four-wheel dynamometers in their testing program. When properly used, this equipment should not damage a SUBARU AWD vehicle.

Under no circumstances should the rear wheels be jacked off the ground, nor should the driveshaft be disconnected in an attempt to bypass AWD for state emission testing. An AWD vehicle must be tested using an AWD dynamometer with all 4 wheels driven and loaded.

7-3. Preparing to Drive

You should perform the following checks and adjustments every day before you start driving.

1. Check that all windows, mirrors, and lights are clean and unobstructed.
2. Check the appearance and condition of the tires. Also check tires for proper inflation.
3. Look under the vehicle for any sign of leaks.
4. Check that no small animals enter the engine compartment.
5. Check that the hood, trunk (Legacy) and rear gate (Outback) are fully closed.
6. Check the adjustment of the seat.
7. Check the adjustment of the inside and outside mirrors.
8. Fasten your seatbelt. Check that your passengers have fastened their seatbelts.
9. Check the operation of the warning and indicator lights when the ignition switch is turned to the “ON” position.
10. Check the gauges, indicator and warning lights after starting the engine.

CAUTION

Trapping small animals in the cooling fan and belts of the engine may result in a malfunction. Check that no small animal enters the engine compartment and under the vehicle before starting the engine.

NOTE

- **Engine oil, engine coolant, brake fluid, washer fluid and other fluid levels should be checked daily, weekly or at fuel stops.**
- **When towing a trailer, refer to “Trailer Hitch (Outback – If Equipped)” ☞P427.**

7-4. Starting and Stopping the Engine (Models without Push-Button Ignition Switch)

■ General Precautions When Starting/Stopping Engine

WARNING

- **Never start the engine from outside the vehicle (except when using the remote engine start system). It may result in an accident.**
- **Do not leave the engine running in locations with poor ventilation, such as a garage and indoors. The exhaust gas may enter the vehicle or indoors, and it may result in carbon monoxide poisoning.**
- **Do not start the engine near dry foliage, paper, or other flammable substances. The exhaust pipe and exhaust emissions can create a fire hazard at high temperatures.**

CAUTION

- **If the engine is stopped during driving, the catalyst may overheat and burn.**
- **When starting the engine, be sure to sit in the driver's seat (except when using the remote engine start system).**

NOTE

- **Avoid racing and rapid acceleration immediately after the engine has started.**
- **Until the engine is warmed up sufficiently, the engine speed is maintained high. The engine speed will gradually drop as the engine warms up.**
- **On rare occasions, it may be difficult to start the engine depending on the fuel used and the driving condition (repeated short trips when the engine is not warmed up sufficiently). In such a case, it is recommended to switch to a different brand of fuel.**
- **On rare occasions, transient knocking may be heard from the engine when the accelerator is operated rapidly such as a rapid start-up and a rapid acceleration. This is not a malfunction.**
- **The engine starts more easily when the headlights, air conditioner and rear window defogger are turned off.**

■ Starting Engine

CAUTION

Do not operate the starter motor continuously for more than 10 seconds. If the engine fails to start after operating the starter for 5 to 10 seconds, wait for 10 seconds or more before trying again.

NOTE

- **It may be difficult to start the engine when the battery has been disconnected and reconnected (for maintenance or other purposes). This difficulty is caused by the electronically controlled throttle's self-diagnosis function. To overcome it, keep the ignition switch in the "ON" position for approximately 10 seconds before starting the engine.**
- **Do not shift the select lever while the starter is cranking.**

CAUTION

If you restart the engine while the vehicle is moving, shift the select lever into the "N" position. Do not attempt to place the select lever of a moving vehicle into the "P" position.

1. Apply the parking brake.
2. Turn off unnecessary lights and accessories.
3. Shift the select lever to the "P" or "N" position (preferably "P" position). The starter will only operate when the select lever is at the "P" or "N" position.
4. Turn the ignition switch to the "ON" position and check the operation of the warning and indicator lights. Refer to "Warning and Indicator Lights" ☞P175.
5. Turn the ignition switch to the "START" position **without** depressing the accelerator pedal. Release the key immediately after the engine has started.

If the engine does not start, perform the following procedure.

(1) Turn the ignition switch to the "LOCK" position and wait for at least 10 seconds. After checking that the parking brake is applied, turn the ignition switch to the "START" position while depressing the accelerator pedal

– CONTINUED –

slightly (approximately a quarter of the full stroke). Release the accelerator pedal as soon as the engine starts.

(2) If this fails to start the engine, turn the ignition switch back to the “LOCK” position and wait for at least 10 seconds. Then fully depress the accelerator pedal and turn the ignition switch to the “START” position. If the engine starts, quickly release the accelerator pedal.

(3) If this fails to start the engine, turn the ignition switch again to the “LOCK” position. After waiting for 10 seconds or longer, turn the ignition switch to the “START” position without depressing the accelerator pedal.

(4) If the engine still does not start, contact your nearest SUBARU dealer for assistance.

6. Confirm that all warning and indicator lights have turned off after the engine has started. The fuel injection system automatically lowers the idle speed as the engine warms up.

While the engine is warming up, make sure that the select lever is at the “P” or “N” position and that the parking brake is applied.

■ Stopping the Engine

The ignition switch should be turned off only when the vehicle is stopped and the engine is idling.

⚠ WARNING

Do not stop the engine when the vehicle is moving. This will cause loss of power to the power steering and the brake booster, making steering and braking more difficult. It could also result in accidental activation of the “LOCK” position on the ignition switch, causing the steering wheel to lock.

1. Stop the vehicle completely.
2. Move the select lever to the “P” position.
3. Turn the ignition switch to the “LOCK/OFF” position.

The engine will stop, and the power will be switched off.

■ Steering Lock

After stopping the engine and the key is removed from ignition switch, the steering wheel will be locked due to the steering lock function.

When the engine is restarted, the steering lock will be automatically canceled.

▼ When the steering lock cannot be released

When you cannot unlock the steering wheel, perform the following steps.

1. Check that the parking brake is applied.
2. Turn off unnecessary lights and accessories.
3. Check that the select lever is set in the “P” position.
4. Depress the brake pedal and keep it depressed.
5. Turn the ignition switch to the “ON” position while turning the steering wheel left and right.

If you cannot unlock the steering wheel by doing the steps, contact your nearest SUBARU dealer.

7-5. Starting and Stopping Engine (Models with Push-Button Start System)

■ Safety Precautions

Refer to “Safety Precautions” ☞P114.

■ Operating Range for Push-Button Start System

Refer to “Operating Range for Push-Button Start System” ☞P168.

■ Starting Engine

WARNING

- **There are some general precautions when starting the engine. Carefully read the precautions described in “General Precautions When Starting/Stopping Engine” ☞P324.**
- **If the indicator on the push-button ignition switch flashes in green after the engine has started, never drive the vehicle. The steering is still locked, and it may result in an accident.**

CAUTION

- **When the operation indicator on the push-button ignition switch is flashing in orange, there may be a malfunction with the vehicle. Contact a SUBARU dealer immediately.**
- **If the indicator on the push-button ignition switch is flashing in green after the engine has started, it means that the steering is still locked. While moving the steering wheel right and left, depress the brake pedal, and press the push-button ignition switch.**
- **Do not continue pressing the push-button ignition switch for more than 10 seconds. Doing so could cause a malfunction. If the engine does not start, stop pressing the push-button ignition switch. Instead, press the push-button ignition switch without depressing the brake pedal to switch the power status to “OFF”. Wait 10 seconds, and then press the push-button ignition switch to start the engine.**

NOTE

- **When pressing the push-button ignition switch while depressing the brake pedal:**
  - **– The engine starter operates for a maximum of 10 seconds and after starting the engine, the starter stops automatically.**
  - **– The engine can be started regardless of the power status.**
- **If the engine does not start, check the security indicator light. Then press the push-button ignition switch without depressing the brake pedal to switch the power to “OFF”.**
  - **– If the light had illuminated, try to start the engine again.**
  - **– If the light had been off, press the push-button ignition switch while depressing the brake pedal more forcefully.**
- **The engine start procedures may not function depending on the radio wave conditions around the vehicle. In such a case, refer to “Starting Engine” ☞P457.**
- **If the vehicle battery is discharged, the steering cannot be unlocked. Charge the battery.**
- **Until the engine is warmed up sufficiently, the engine speed will be maintained high. The engine speed will**

– CONTINUED –

decrease as the engine warms up.

- **Do not shift the select lever while the starter is cranking.**

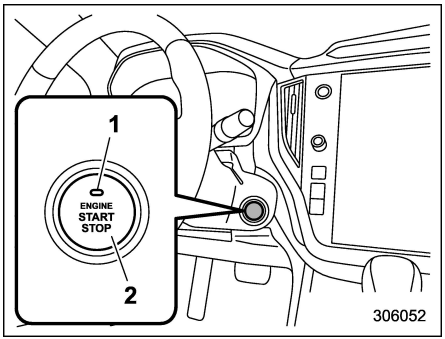

1) Operation indicator
2) Push-button ignition switch

When the push-button ignition switch is pressed while depressing the brake pedal, the engine will start. The starting procedure for the engine is as follows.

1. Carry the access key fob, and sit in the driver's seat.
2. Make sure the parking brake is applied.
3. Make sure the select lever is in the "P" position. The engine can also start when the select lever is in the "N" position, however, for safety reasons, start in the "P" position.
4. Depress the brake pedal until the operation indicator on the push-button ignition switch turns green. When starting with the select lever in the "N" position, the indicator does not turn green.
5. While depressing the brake pedal, press the push-button ignition switch.

NOTE

- **While pressing the select lever button in, the indicator on the push-button ignition switch will not turn green even when the select lever is in the "P" position.**
- **In case the engine does not start by the normal engine start procedure, move the select lever to the "P" position, and switch the power to "ACC". Depress the brake pedal, and press the push-button ignition switch for at least 15 seconds. The engine may start. Only use this engine start procedure in case of emergency.**
- **When the engine is not started, the brake pedal may feel stiff. In such a case, depress the brake pedal more forcefully than usual. Check that the operation indicator on the push-button ignition switch turns green, and press the push-button ignition switch to start the engine.**

■ Stopping Engine

1. Stop the vehicle completely.
2. Move the select lever to the "P" position.
3. Press the push-button ignition switch. The engine will stop, and the power will be switched off.

⚠ WARNING

- **Do not touch the push-button ignition switch during driving.**

  When the push-button ignition switch is operated as follows, the engine will stop.

  – The switch is pressed and held for 3 seconds or longer.

  – The switch is pressed briefly 3 times or more in succession.

  When the engine stops, the brake booster will not function. A greater foot pressure will be required on the brake pedal.

  The power steering system will not operate either. A greater force will be required to steer, and it may result in an accident.
- **If the engine stops during driving, do not operate the push-button ignition switch or open any of the**

doors until the vehicle is stopped in a safe location. It is dangerous because the steering lock may be activated. Stop the vehicle in a safe place, and contact a SUBARU dealer immediately.

CAUTION

- **Do not stop the engine while the select lever is in a position other than the "P" position.**
- **If the engine is stopped while the select lever is in a position other than the "P" position, the power will be in "ACC". If the vehicle is left in this condition, the battery may be discharged.**

NOTE

Although you can stop the engine by operating the push-button ignition switch, do not stop the engine during driving except in an emergency.

■ When Access Key Fob Does Not Operate Properly

Refer to "Access Key Fob – If Access Key Fob Does Not Operate Properly" ☞P456.

■ Steering Lock

After stopping the engine and the driver's door is open, the steering wheel will be locked due to the steering lock function.

When the engine is restarted, the steering lock will be automatically canceled.

▼ When the steering lock cannot be released

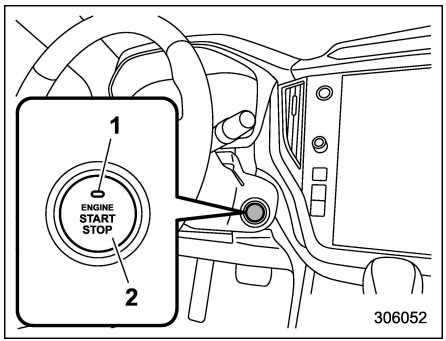

1) Operation indicator
2) Push-button ignition switch

When you cannot restart the engine due to the steering lock, check the status of operation indicator and perform the following steps.

▽ Operation indicator flashing in green

1. Check that the select lever is set in the "P" position.
2. Depress the brake pedal and keep it.
3. Press the push-button ignition switch while turning the steering wheel left and right.

▽ Operation indicator flashing in orange

There may be a malfunction in the steering lock function. Immediately contact your nearest SUBARU dealer.

7-6. Remote Engine Start System (Dealer Option)

WARNING

- **There are some general precautions when starting the engine. Carefully read the precautions described in "General Precautions When Starting/Stopping Engine" ☞P324.**
- **Do not remote start a vehicle in an enclosed environment (e.g. closed garage). Prolonged operation of a motor vehicle in an enclosed environment can cause a harmful build-up of carbon monoxide. Carbon monoxide is harmful to your health. Exposure to high levels of carbon monoxide can cause headaches, dizziness or in extreme cases unconsciousness and/or death.**

The remote engine start system allows you to start the engine from outside the vehicle. In addition, the remote engine start system can activate the heater or air conditioner, providing you with a comfortable cabin upon entry. For more details, refer to the Owner's Manual supplement for the remote engine start system.

NOTE

- **The length of time for which it is acceptable to allow the engine to remain idling may be bound by local laws and regulations. Check the local rules when using the remote engine start system.**
- **When taking your vehicle in for service, it is recommended that you inform the service personnel that your vehicle is equipped with a remote engine start system.**

■ Remote Engine Starter Transceiver (Fob)

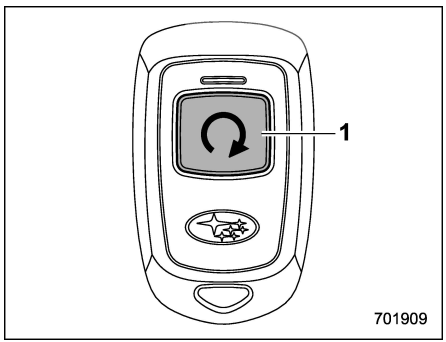

1) Fob button

▼ Starting the engine

NOTE

All vehicle doors (including rear gate) and the engine hood must be closed prior to activating the remote engine start system. Any open entry point will prevent starting or cause the engine to stop.

The remote engine start system is activated by pressing the fob button on your remote engine starter transceiver (fob) twice within 3 seconds. If the fob is within operating range of the system and the start request is received, the following will occur.

- The fob flashes and beeps once.
- The horn sounds once.
- The side marker lights, tail lights, and parking lights flash once.

If the fob is not within range (the user is too far away from the vehicle), the fob will indicate two long flashes without beeping.

The system will check certain safety preconditions before starting, and if all conditions are met, the engine will start within 5 seconds. After the engine starts, the following will occur.

- The fob flashes and beeps twice.
- The horn sounds once.

- The side marker lights, tail lights, and parking lights flash once.

While the engine is idling via the remote engine start system, the following will occur.

- The side marker lights, tail lights, and parking lights remain illuminated.
- The fob button flashes once every 3 seconds.
- The power windows are disabled.

If the engine turns over but does not start (or starts and stalls) the remote engine start system will power off and then attempt to start the engine 3 additional times. The system will not attempt to restart the engine if it determines a vehicle malfunction is preventing starting. If the engine does not start after 3 additional attempts, the remote engine start request will be aborted.

▼ Stopping the engine

Press and hold the fob button for at least 2 seconds to stop the engine. The fob will flash and beep three times, indicating the engine has stopped. If the stop request is not received (for example, if the user is too far away from the vehicle), the fob will continue to flash once every 3 seconds. The system will automatically stop the engine after 15 minutes.

▼ Remote start safety features

For safety and security reasons, the remote engine start system will prevent starting (or stop the engine if running) and sound the horn twice if any of the following conditions is detected. In addition, the fob will flash and beep 3 times.

- The total run-time has exceeded 20 minutes.
- The brake pedal is depressed.
- A key is in the ignition switch.
- The engine hood is open.
- The engine idle speed exceeds 3,500 rpm.
- The security alarm is triggered.
- The select lever is not in the “P” position.

If the system detects any door (including the rear gate) open during operation, it will prevent starting or stop the engine, and sound the horn and flash side marker lights, tail lights, and parking lights 6 times.

In addition to the items above, if the vehicle’s engine management system determines there is a safety risk due to a vehicle-related problem, the vehicle will power down and the horn will sound 3 times.

NOTE

- **If the alarm system is armed at the time of remote engine starter activation (the security indicator light on the combination meter is flashing), the alarm system will remain armed throughout the remote start run cycle.**
- **If the alarm system is disarmed at the time of remote engine starter activation (the security indicator light on the combination meter is not flashing), the alarm system will remain disarmed throughout the remote start run cycle.**

▼ Remote start operation - fob confirmation

Your remote engine starter fob is a bidirectional transceiver that can confirm system operation with several different visual and audible indications. The fob’s LED-backlit button and internal piezo buzzer will indicate the status of the system using the following the flash and beep sequences, provided the fob is within operational range of the system.

– CONTINUED –

Precondition	Fob Indication		Meaning
	Flash	Beep	
Fob start button is being pressed	Continuous while button is held down	—	The fob is transmitting an RF signal
User attempts to start engine by pressing fob button twice within 3 sec.	1 flash	1 beep	Engine start request received
	2 flashes	2 beeps	Engine started successfully
	1 flash every 3 sec	—	Engine idling
	3 flashes	3 beeps	Vehicle is in range but engine not started
	2 long flashes	—	Vehicle not in range (engine not started)
Engine idling by remote engine start operation	1 flash every 3 sec	—	Engine idling
	3 flashes	3 beeps	Engine stopped by system time-out or for safety reasons (see sections above)
User attempts to stop engine by pressing and holding fob button for at least 2 sec.	3 flashes	3 beeps	Engine stopped by user request
	1 flash every 3 sec	—	Stop request not received. Engine still idling.

Alternate Operation Method for Models with “Keyless Access with Push-Button Start System”

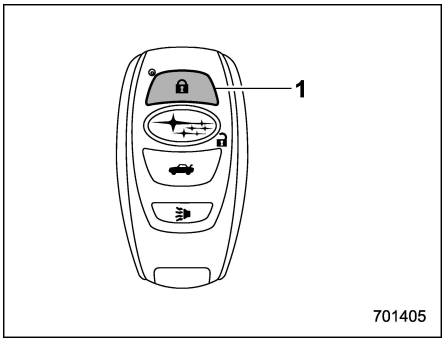

Access key fob
1) Lock button

An access key fob can be used as the remote engine start transmitter. Operate the lock button to start or stop the engine as follows.

▼ Before starting the engine

Before using the remote engine start system to start the engine, confirm the following conditions.

- The select lever is in the “P” position.
- All doors including the rear gate are closed.
- The engine hood is closed.
- The push-button ignition switch is in the “OFF” position.

▼ Starting the engine

To start the engine with remote engine start system, briefly press the lock button twice within 2 seconds, then press and hold the lock button for 3 seconds.

1. Press the lock button briefly. The hazard warning flashers then flash once and the keyless buzzer chirps once.
2. Within 2 seconds, press the lock button briefly again. The hazard warning flashers then flash once again, and the keyless buzzer chirps once again.
3. After step 2, immediately press and hold the lock button. The hazard warning flashers then flash three times, and the horn will honk once.
4. Approximately 3 seconds after step 3, release the lock button. The engine will then start successfully.

▼ Stopping the engine

Press and hold the lock button to stop the engine with remote engine start system.

▼ Remote start safety features

For detailed information, refer to “Remote start safety features” ☞P331.

Entering the Vehicle While It Is Running via Remote Start

1. Unlock the vehicle doors using the keyless access function (if equipped) or remote keyless entry system.

If the vehicle’s doors are unlocked manually using the key, the vehicle’s alarm system will trigger (if the alarm system is armed prior to activating the remote engine start system) and the engine will turn off. Perform either of the following procedures to disarm the alarm system. Refer to “Alarm System” ☞P140.

- Insert the key into the ignition switch and turn it to the “ON” position (models without “keyless access with push-button start system”).
- Turn the push-button ignition switch to the “ACC” or “ON” position (models with “keyless access with push-button start system”).
- Press any button on the access key fob/remote keyless entry transmitter.

2. Enter the vehicle.
3. The engine will shut down when any door or rear gate is opened.
4. Insert the key into the ignition switch and turn to the “START” position to restart the engine.

– CONTINUED –

■ Entering the Vehicle Following Remote Engine Start Shutdown

An alarm trigger may occur if the vehicle is opened by the remote keyless entry transmitter within a few seconds immediately following remote engine start shutdown.

■ Pre-heating or Pre-cooling the Interior of the Vehicle

Before exiting the vehicle, set the temperature controls to the desired setting and operation. After the system starts the engine, the heater or air conditioning will activate and heat or cool the interior to your setting.

■ Remote Transmitter Program (Remote Engine Starter Transceiver)

New transmitters can be programmed to the remote engine start system in the event that a transmitter is lost, stolen, damaged or additional transmitters are desired (the system will accept up to eight transmitters). New remote engine start transmitters can be programmed according to the following procedure.

1. Open the driver's door (the driver's door must remain open throughout the entire process).
2. Depress and hold the brake pedal.
3. Turn the ignition switch to "ON" then "LOCK"/"OFF", back to "ON" then "LOCK"/"OFF", back to "ON" then "LOCK"/"OFF", then back to "ON" again and leave the ignition "ON" throughout the programming process.
4. The system will flash the side marker lights, tail lights and parking lights and honk the horn three times, indicating that the system has entered the transmitter learn mode.
5. Press and release the "Ω" button on the transmitter that you want to program.
6. The system will flash the side marker lights, tail lights and parking lights and honk the horn one time, indicating that the system has learned the transmitter. Upon successful programming, the remote start confirmation transmitter button will flash one time.
7. Repeat step 5 for any additional transmitters (the system will accept up to eight transmitters).
8. The system will exit the transmitter learn mode if the key is turned to the "LOCK"/"OFF" position, the door is closed or after 2 minutes.

■ System Maintenance

NOTE

For remote engine starter transceiver:

In the event that the vehicle's battery is replaced, discharged or disconnected, it will be necessary to start the vehicle a minimum of one time using the key prior to activating the remote engine start system. This is required to allow the vehicle electronic systems to re-synchronize.

▼ Changing the battery

⚠ CAUTION

- **Do not let dust, oil or water get on or in the remote engine start transmitter when replacing the battery.**
- **Be careful not to damage the printed circuit board in the remote engine start transmitter when replacing the battery.**
- **Be careful not to allow children to touch the battery and any removed parts; children could swallow them.**
- **There is a danger of explosion if an incorrect replacement battery is used. Replace only with the**

same or equivalent type of battery.

- **Battery should not be exposed to excessive heat such as sunshine, fire or the like.**

For models with "keyless access with push-button start system":

Perform the procedure described in "Replacing Battery of Access Key Fob" ☞P515.

For remote engine starter transceiver:

The 3-volt lithium battery (model CR-2450) supplied in your remote engine start transmitter should last approximately one year, depending on usage. When the battery begins to weaken, you will notice a decrease in range (distance from the vehicle that your remote control operates). Follow the instructions below to change the remote engine start transmitter battery.

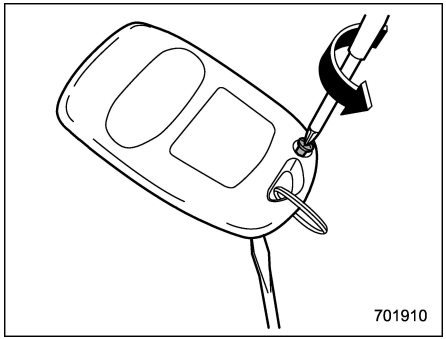

1. Remove the small phillips screw located on the back side lower left corner of the transmitter.
2. Carefully pry the remote engine start transmitter halves apart using a small flathead screwdriver.

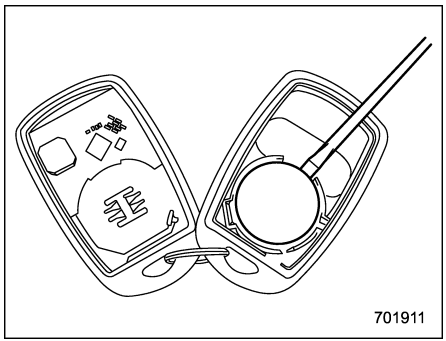

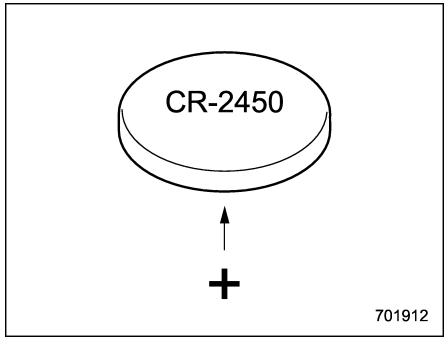

3. Remove the circuit board from the bottom half of the case and remove the battery and replace with new one. Be sure to observe the (+) sign on the old battery before removing it to ensure that the new battery is inserted properly (battery "+" should be pointed away from the transmitter circuit board on battery).
4. Carefully snap the case halves back together, reinstall the phillips screw and test the remote engine start system.

– CONTINUED –

■ Certification for Remote Engine Starter

▼ U.S.-spec. models

⚠ CAUTION

FCC WARNING

Changes or modifications not expressly approved by the party responsible for compliance could void the user's authority to operate the equipment.

NOTE

This device complies with part 15 of the FCC Rules. Operation is subject to the following two conditions: (1) This device may not cause harmful interference, and (2) this device must accept any interference received, including interference that may cause undesired operation.

▼ Canada-spec. models

NOTE

This device complies with Industry Canada's licence-exempt RSSs. Operation is subject to the following two conditions: (1) This device may not cause interference; and (2) This device must accept any interference, including interference that may cause undesired operation of the device.

REMARQUE

Le présent appareil est conforme aux CNR d'Industrie Canada applicables aux appareils radio exempts de licence. L'exploitation est autorisée aux deux conditions suivantes: (1) l'appareil ne doit pas produire de brouillage; (2) l'utilisateur de l'appareil doit accepter tout brouillage radioélectrique subi, même si le brouillage est susceptible d'en compromettre le fonctionnement.

203226

7-7. Continuously Variable Transmission

The continuously variable transmission is electronically controlled and provides an infinite number of forward speeds and 1 reverse speed. It also has a manual mode.

⚠ WARNING

Do not shift from the "P" or "N" position into the "D" or "R" position while depressing the accelerator pedal. This may cause the vehicle to lurch forward or backward.

⚠ CAUTION

- **Observe the following precautions. Failure to observe these precautions could cause damage to the transmission.**
  - **Shift into the "P" or "R" position only after the vehicle has completely stopped.**
  - **Do not shift from the "D" position into the "R" position or vice versa until the vehicle has completely stopped.**
- **Do not race the engine for more than 5 seconds in any position**

except the "N" or "P" position when the brake is applied or when chocks are used in the wheels. This may cause the transmission fluid to overheat.

- Never move the vehicle rearward by inertia with the select lever set in a forward driving position or move the vehicle forward by inertia with the select lever set in the "R" position. Doing so may result in an unexpected accident or malfunction.
- When parking the vehicle, first securely apply the parking brake and then place the select lever in the "P" position. Do not park for a long time with the select lever in any other position as doing so could result in a dead battery.

NOTE

- When the engine coolant temperature is still low, the transmission will shift at higher engine speeds than when the coolant temperature is sufficiently high in order to shorten the warm-up time and improve driveability. The gearshift timing will automatically shift to the normal timing after the engine has warmed up.
- Immediately after transmission fluid is replaced, you may feel that the transmission operation is somewhat unusual. This results from invalidation of data which the on-board computer has collected and stored in memory to allow the transmission to shift at the most appropriate times for the current condition of your vehicle. Optimized shifting will be restored as the vehicle continues to be driven for a while.
- When driving under continuous heavy load conditions such as towing a camper or climbing a long, steep hill, the engine speed, vehicle speed and air conditioning system cooling performance may automatically be reduced. This is not a malfunction. This phenomenon results from the engine control function maintaining the cooling performance of the vehicle. The engine and vehicle speed will return to a normal speed when the engine is able to maintain the optimum cooling performance after the heavy load decreases. Driving under a heavy load must be performed with extreme care. Do not try to pass a vehicle in front when driving on an uphill slope while towing.
- The continuously variable transmission is a chain type system that provides superior transmission efficiency for maximum fuel economy. At times, depending on varying driving conditions, a chain operating noise may be heard that is characteristic of this type of system.
- Place the shift boot to the original position after it is lifted. If the shift lever is operated with the shift boot in the rolled up position, the shift boot may have tension and it may disturb the shift lever operation.

■ Select Lever

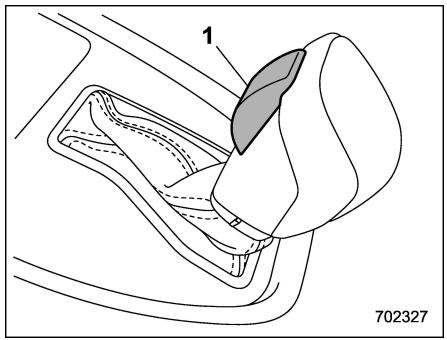

1) Select lever button

– CONTINUED –

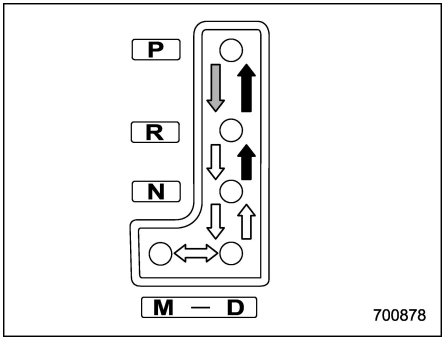

⇨ : With the brake pedal depressed, shift while pressing the select lever button in
➡ : Shift while pressing the select lever button in
⇨ : Shift without pressing the select lever button

The select lever has four positions, “P”, “R”, “N”, “D” and also has a manual gate for using the manual mode.

NOTE

For some models, to protect the engine while the select lever is in the “P” or “N” position, the engine is controlled so that the engine speed may not become too high even if the accelerator pedal is depressed hard.

▼ P (Park)

This position is for parking the vehicle and starting the engine. In this position, the transmission is mechanically locked to prevent the vehicle from rolling freely.

When you park the vehicle, first apply the parking brake, then shift into the “P” position. Do not hold the vehicle with only the mechanical friction of the transmission.

To shift the select lever from the “P” to any other position, you should depress the brake pedal fully then move the select lever. This prevents the vehicle from lurching when it is started.

▼ R (Reverse)

This position is for backing the vehicle. To shift from the “N” to “R” position, stop the vehicle completely then move the lever to the “R” position while pressing the select lever button in.

▼ N (Neutral)

This position is for restarting a stalled engine. In this position, the transmission is neutral, meaning that the wheels and transmission are not locked. Therefore, the vehicle will roll freely, even on the slightest incline unless the parking brake or foot brake is applied.

⚠ WARNING

Do not drive the vehicle with the select lever in the “N” (neutral) position. Engine braking has no effect in this condition and the risk of an accident is consequently increased.

▼ D (Drive)

This position is for normal driving. The transmission shifts automatically and continuously into a suitable gear according to the vehicle speed and the acceleration you require. Also, while driving up and down a hill, the transmission assists and controls the driving performance and engine braking while corresponding to the road grade.

When more acceleration is required in “D” position, depress the accelerator pedal fully to the floor and hold that position. The transmission will automatically downshift. In this case, the transmission will operate like a conventional automatic transmission. When you release the pedal, the transmission will return to the original gear position.

To use the manual mode, move the lever from this position into the manual gate.

For models with manual mode, if one of the shift paddles behind the steering wheel is

operated while driving in the “D” position, the transmission will temporarily switch to the manual mode. In this mode, you can shift into any gear position using the shift paddles. For details about the manual mode, refer to “Selection of Manual Mode” ☞P340. Once the vehicle speed stabilizes, the transmission will switch from the manual mode back to the “D” position for normal driving.

▽ **While climbing a grade**

When driving up a hill, undesired upshift is prevented from taking place when the accelerator is released. This minimizes the chance of subsequent downshifting to a lower gear when accelerating again. This prevents repeated upshifting and downshifting resulting in a smoother operation of the vehicle.

NOTE

The transmission may downshift, depending on the way the accelerator pedal is depressed to accelerate the vehicle again.

■ Shift Lock Function

The shift lock function helps prevent the improper operation of the select lever.

- The select lever cannot be operated unless the ignition switch is turned to the “ON” position and the brake pedal is depressed.
- The select lever cannot be moved from the “P” position to any other position before the brake pedal is depressed. Depress the brake pedal first, and then operate the select lever.
- Only the “P” position allows you to turn the key from the “ACC” position to the “LOCK” position and remove the key from the ignition key cylinder (models without “keyless access with push-button start system”).
- Only the “P” position allows you to turn the push-button ignition switch to the “OFF” position (models with “keyless access with push-button start system”).

▼ Shift lock release

If the select lever cannot be operated, turn the ignition switch back to the “ON” position then move the select lever to the “P” position with the select lever button pressed and brake pedal depressed.

If the select lever does not move after performing the above procedure, refer to “Shift lock release using the shift lock release portion” ☞P339.

▼ Shift lock release using the shift lock release portion

Perform the following procedure to release the shift lock.

1. Apply the parking brake and stop the engine.

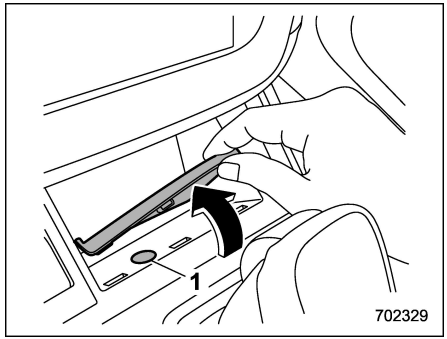

1) Hole

2. Turn over the inner trim of the pocket.

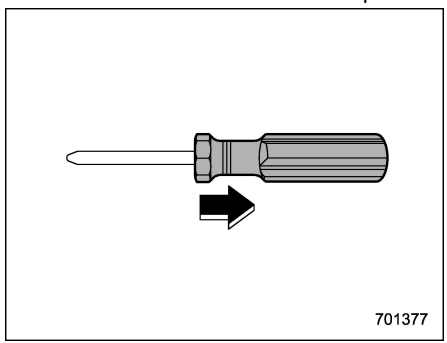

– CONTINUED –

3. Remove the grip portion of the screwdriver.

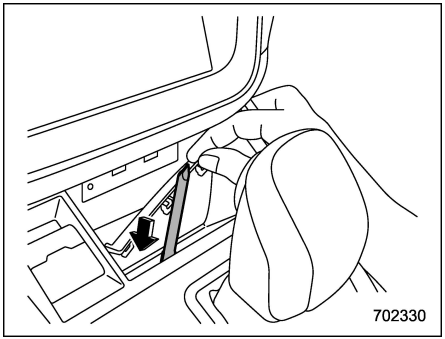

4. While depressing the brake pedal, insert the screwdriver into the hole, press the shift lock release portion using the screwdriver, and then move the select lever.

If the select lever does not move after performing the above procedure, the shift lock system may be malfunctioning. Contact a SUBARU dealer for an inspection as soon as possible.

■ Selection of Manual Mode

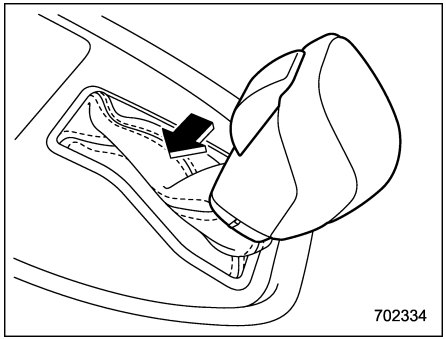

With the vehicle either moving or stationary, move the select lever from the “D” position to the “M” position to select the manual mode.

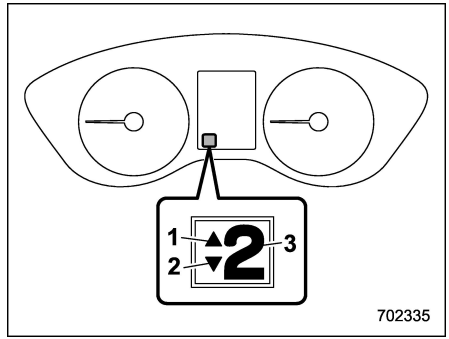

1) Upshift indicator
2) Downshift indicator
3) Gear position indicator

When the manual mode is selected, the gear position indicator and upshift indicator and/or downshift indicator on the combination meter illuminate. The gear position indicator shows the currently selected gear in the 1st-to-8th gear range. The upshift and downshift indicators show when a gearshift is possible. When the upshift indicator “△” is on, upshifting is possible. When the downshift indicator “▽” is on, downshifting is possible. When both indicators are on, upshifting and downshifting are both possible. When the vehicle stops (for example, at traffic signals), the downshift indicator turns off.

Gearshifts can be performed using the

shift paddle behind the steering wheel.

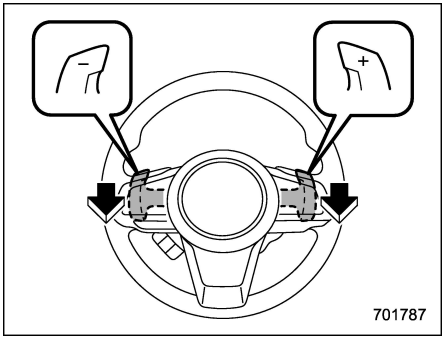

To upshift to the next higher gear position, pull the shift paddle that has "+" indicated on it. To downshift to the next lower gear position, pull the shift paddle that has "–" indicated on it.

To deselect the manual mode, return the select lever to the "D" position from the "M" position.

While driving with the select lever in the "D" position, if you change gears by operating the shift paddle, the gear position indicator light illuminates and shows the current gear condition.

CAUTION

Do not place or hang anything on the shift paddles. Doing so may result in accidental gear shifting.

NOTE

Please read the following points carefully and bear them in mind when using the manual mode.

- **If you attempt to shift down when the engine speed is too high, i.e., when a downshift would push the tachometer needle beyond the red zone, beeps will be emitted to warn you that the downshift is not possible.**
- **If you attempt to shift up when the vehicle speed is too low, the transmission will not respond.**
- **You can perform a skip-shift (for example, from 4th to 2nd) by operating the shift paddle twice in rapid succession.**
- **The transmission automatically selects 1st gear when the vehicle stops moving.**
- **If the temperature of the transmission fluid becomes too high, the "AT OIL TEMP" warning light will illuminate. Immediately stop the vehicle in a safe place and let the engine idle until the warning light turns off.**

For models with SI-DRIVE, by selecting Sport Sharp (S#) mode, upshifting will not occur automatically. According to the road conditions, shift change manually so that the tachometer needle does not enter the red zone. Also, if the engine revolutions reach the specified number, the fuel supply will be cut. In this case, perform shift up operation.

■ Driving Tips

NOTE

If the accelerator and brake pedals are depressed at the same time, driving torque may be restrained. This is not a malfunction.

- On a road surface where there is a risk of wheelspin (for example, a snow- or gravel-covered road), you can pull away from a standstill safely and easily by first selecting the 2nd gear of the manual mode.
- Always apply the foot or parking brake when the vehicle is stopped in the "D" or "R" position.
- Make sure to apply the parking brake when parking your vehicle. Do not hold the vehicle with only the transmission.
- Do not keep the vehicle in a stationary position on an uphill grade by using the "D" position. Use the brake instead.
- The engine may, on rare occasions, knock when the vehicle rapidly accelerates or rapidly pulls away from a standstill.

– CONTINUED –

This phenomenon does not indicate a malfunction.

7-8. SI-DRIVE (If Equipped)

SI-DRIVE (SUBARU Intelligent Drive) works to maximize engine performance, control and efficiency.

This system consists of two modes: Intelligent (I) and Sport Sharp (S#). By operating the SI-DRIVE switches, the character of the power unit changes.

■ Intelligent (I) Mode

▼ **For smooth, efficient performance driving**

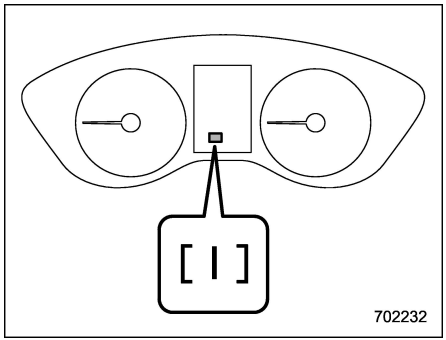

The linear acceleration characteristic of the Intelligent (I) mode is ideal for normal driving usage.

The Intelligent (I) mode provides well-balanced performance with greater fuel efficiency and smooth driveability without stress. Power delivery is moderate during acceleration for maximum fuel efficiency.

This is ideal for around-town driving and situations that do not require full power output. It provides better control in difficult driving conditions, such as slippery roads or loose surfaces, due to gentler throttle response.

■ Sport Sharp (S#) Mode

▼ **For maximum performance driving**

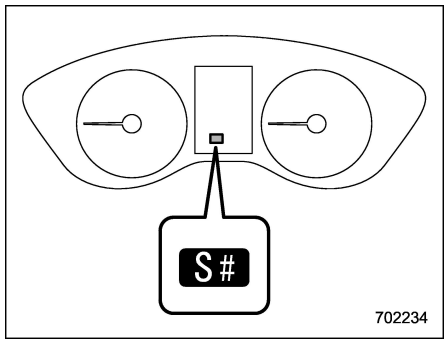

For sports-minded drivers, the Sport Sharp (S#) mode offers an exhilarating level of engine performance and control. The throttle becomes more responsive regardless of the engine speed. Delivering maximum driving enjoyment, this mode is

ideal for tackling twisting roads and for merging or overtaking other vehicles on the freeway with confidence.

■ SI-DRIVE Switches

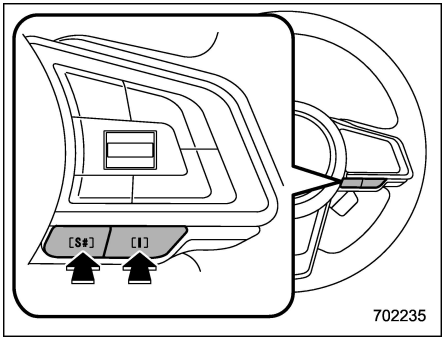

- To select the Intelligent (I) mode, press the “I” switch.
- To select the Sport Sharp (S#) mode, press the “S#” switch.

NOTE

- **While the engine is cool, you cannot change to Sport Sharp (S#) mode.**
- **The next time you turn on the engine, after you turned off the engine in the Sport Sharp (S#) mode, the SI-DRIVE mode changes to the Intelligent (I) mode.**
- **While the engine is running, if the CHECK ENGINE warning light/malfunction indicator light illuminates, the SI-DRIVE mode changes to the Sport Sharp (S#) mode. In this case, it is not possible to change to another mode.**
- **If any of the SI-DRIVE indicators blink, the SI-DRIVE system may be malfunctioning. Contact your SUBARU dealer.**

7-9. Power Steering

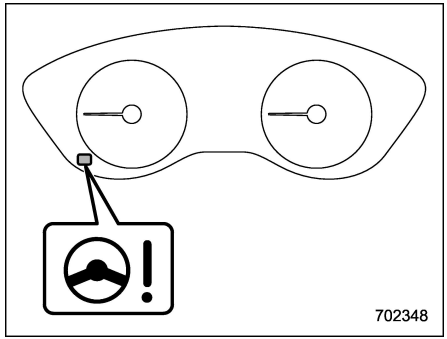

Power steering warning light

The vehicle is equipped with an electric power steering system. When the ignition switch is turned to the “ON” position, the power steering warning light on the combination meter illuminates to inform the driver that the warning system is functioning properly. Then, if the engine started, the warning light turns off to inform the driver that the steering power assist is operational.

⚠ CAUTION

While the power steering warning light is illuminated, there may be more resistance when the steering

– CONTINUED –

wheel is operated. Drive carefully to the nearest SUBARU dealer and have the vehicle inspected immediately.

NOTE

If the steering wheel is operated in the following ways, the power steering control system may temporarily limit the power assist in order to prevent the system components, such as the control computer and drive motor, from overheating.

- **The steering wheel is operated frequently and turned sharply while the vehicle is maneuvered at extremely low speeds, such as while frequently turning the steering wheel during parallel parking.**
- **The steering wheel remains in the fully turned position for a long period of time.**

At this time, there will be more resistance when steering. However this is not a malfunction. Normal steering force will be restored after the steering wheel is not operated for a while and the power steering control system has an opportunity to cool down. However, if the power steering is operated in a non-standard way which causes power assist limitation to occur too frequently, this may result in a malfunction of the power steering control system.

7-10. Braking

■ Braking Tips

⚠ WARNING

Never rest your foot on the brake pedal while driving. This can cause dangerous overheating of the brakes and needless wear on the brake pads.

▼ When the brakes get wet

When driving in rain or after washing the vehicle, the brakes may get wet. As a result, brake stopping distance will be longer. To dry the brakes, drive the vehicle at a safe speed while lightly depressing the brake pedal to heat up the brakes.

▼ Use of engine braking

Remember to make use of engine braking in addition to foot braking. When descending a grade, if only the foot brake is used, the brakes may start working improperly because of brake fluid overheating, caused by overheated brake pads. To help prevent this, shift into a lower gear to get stronger engine braking.

▼ Braking when a tire is punctured

Do not depress the brake pedal suddenly when a tire is punctured. This could cause

a loss of control of the vehicle. Keep driving straight ahead while gradually reducing speed. Then slowly pull off the road to a safe place.

■ Brake System

▼ Two separate circuits

Your vehicle has a dual circuit brake system. Each circuit works diagonally across the vehicle. If one circuit of the brake system should fail, the other half of the system still works. If one circuit fails, the brake pedal will go down much closer to the floor than usual and you will need to press it down much harder. And a much longer distance will be needed to stop the vehicle.

▼ Brake booster

The brake booster uses engine manifold vacuum to assist braking force. Do not turn off the engine while driving because that will turn off the brake booster, resulting in poor braking power.

The brakes will continue to work even when the brake booster completely stops functioning. If this happens, however, you will have to depress the pedal much harder than normal and the braking distance will increase.

▼ Brake assist system

⚠ WARNING

Do not be overconfident about the brake assist. It is not a system that brings more braking ability to the vehicle beyond its braking capability. Always use the utmost care when driving regarding vehicle speed and safe distance.

⚠ CAUTION

When you need to brake suddenly, continue depressing the brake pedal strongly to bring the effect of the brake assist.

Brake assist is a driver assistance system. It assists the brake power when the driver cannot depress the brake pedal strongly and the brake power is insufficient.

Brake assist generates the brake power according to the speed at which the driver depresses the brake pedal.

NOTE

When you depress the brake pedal strongly or suddenly, the following phenomena occur. However, even though these occur, they do not indicate any malfunctions, and the brake assist system is operating properly.

- **You might feel that the brake pedal is applied by lighter force and generates a greater braking force.**
- **You might hear the sound of ABS operating from the engine compartment.**

■ Disc Brake Pad Wear Warning Indicators

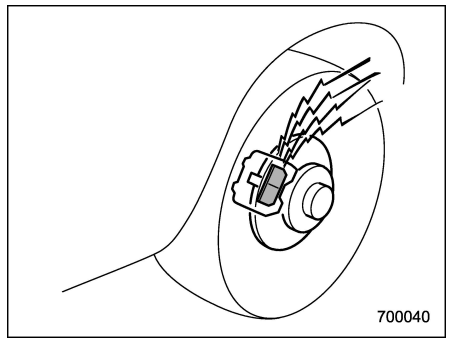

The disc brake pad wear warning indicators on the disc brakes give a warning noise when the brake pads are worn.

If a squeaking or scraping noise is heard from the disc brakes while braking, immediately have your vehicle inspected by the nearest SUBARU dealer.

7-11. ABS (Anti-Lock Brake System)

WARNING

Always use the utmost care in driving – overconfidence because you are driving with an ABS equipped vehicle could easily lead to a serious accident.

CAUTION

- **The ABS does not always decrease stopping distance. You should always maintain a safe following distance from other vehicles.**
- **When driving on badly surfaced roads, gravel roads, icy road, or over newly fallen snow, stopping distances may be longer for a vehicle with the ABS than one without. When driving under these conditions, therefore, reduce your speed and leave ample distance from other vehicles.**
- **When you feel the ABS operating, you should maintain constant brake pedal pressure. Do not pump the brake pedal since doing so may defeat the operation of the ABS.**

The ABS prevents the lock-up of wheels which may occur during sudden braking or braking on slippery road surfaces. This helps prevent the loss of steering control and directional stability caused by wheel lock-up.

When the ABS is operating, you may hear a chattering noise or feel a slight vibration in the brake pedal. This is normal when the ABS operates.

The ABS will not operate when the vehicle speed is below approximately 6 mph (10 km/h).

■ ABS Self-Check

You may feel a slight shock in the brake pedal and hear the operating noise of the ABS from the engine compartment just after the vehicle is started. This is caused by an automatic functional test of the ABS being carried out and does not indicate any abnormal condition.

■ ABS Warning Light

Refer to “ABS Warning Light” ☞P181.

7-12. Electronic Brake Force Distribution (EBD) System

The EBD system maximizes the effectiveness of the brakes by allowing the rear brakes to supply a greater proportion of the braking force. It functions by adjusting the distribution of braking force to the rear wheels in accordance with the vehicle’s loading condition and speed.

The EBD system is an integral part of the ABS and uses some of the ABS components to perform its function of optimizing the distribution of braking force. If any of the ABS components used by the EBD function fails, the EBD system also stops working.

When the EBD system is operating, you may hear a chattering noise or feel a slight vibration in the brake pedal. This is normal and does not indicate a malfunction.

■ EBD System Malfunctions

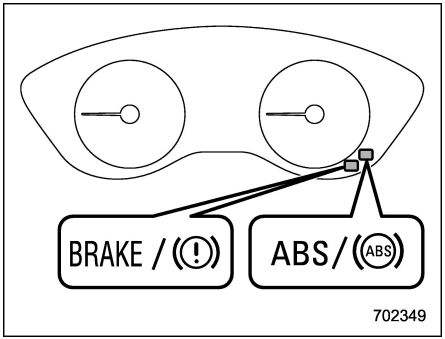

If a malfunction occurs in the EBD system, the system stops working and the brake system warning light and ABS warning light illuminate simultaneously.

- Brake system warning light
- ABS warning light
- Vehicle Dynamics Control warning light

If the both warning light remains on even though the parking brake is released, the brake fluid level may be low or there could be a problem with the EBD system. Park the vehicle in a safe place immediately and contact an SUBARU dealer.

WARNING

- **Driving with the brake system warning light on is dangerous. This indicates your brake system may not be working properly. If the light remains on, have the brakes inspected by a SUBARU dealer immediately.**
- **If at all in doubt about whether the brakes are operating properly, do not drive the vehicle. Have your vehicle towed to the nearest SUBARU dealer for repair.**

7-13. Vehicle Dynamics Control System

WARNING

Always use the utmost care in driving – overconfidence because you are driving with a Vehicle Dynamics Control system equipped vehicle could easily lead to a serious accident.

CAUTION

- **Even if your vehicle is equipped with Vehicle Dynamics Control system, winter tires should be used when driving on snow-covered or icy roads; in addition, vehicle speed should be reduced considerably. Simply having a Vehicle Dynamics Control system does not guarantee that the vehicle will be able to avoid accidents in any situation.**
- **Activation of the Vehicle Dynamics Control system is an indication that the road being travelled on has a slippery surface; since having Vehicle Dy-**

– CONTINUED –

namics Control is no guarantee that full vehicle control will be maintained at all times and under all conditions, its activation should be seen as a sign that the speed of the vehicle should be reduced considerably.

- **Whenever suspension components, steering components, or an axle are removed from a vehicle equipped with the Vehicle Dynamics Control system, have an inspection of that system performed by an authorized SUBARU dealer.**
- **The following precautions should be observed in order to ensure that the Vehicle Dynamics Control system is operating properly.**
  - **All four wheels should be fitted with tires of the same size, type, and brand. Furthermore, the amount of wear should be the same for all four tires.**
  - **Keep the tire pressure at the proper level as shown on the vehicle placard attached to the driver's side door pillar.**
  - **When replacing a flat tire, use only the specified temporary spare tire. However, even with the specified temporary spare tire, the effectiveness of the Vehicle Dynamics Control system will be reduced.**
- **If non-matching tires are used, the Vehicle Dynamics Control system may not operate correctly.**

In the event of wheelspin and/or skidding on a slippery road surface and/or during cornering and/or an evasive maneuver, the Vehicle Dynamics Control system adjusts the engine's output and the wheels' respective braking forces to help maintain traction and directional control.

- **Traction Control Function**

The traction control function is designed to prevent spinning of the driving wheels on slippery road surfaces, thereby helping to maintain traction and directional control. Activation of this function is indicated by flashing of the Vehicle Dynamics Control operation indicator light.

- **Skid Suppression Function**

The skid suppression function is designed to help maintain directional stability by suppressing the wheels' tendency to slide sideways during steering operations. Activation of this function is indicated by flashing of the Vehicle Dynamics Control operation indicator light.

NOTE

- **The Vehicle Dynamics Control system may be considered normal when the following conditions occur.**
  - **Slight twitching of the brake pedal is felt.**
  - **The vehicle or steering wheel shakes to a small degree.**
  - **An operating noise from the engine compartment is heard briefly when starting the engine and when driving off after starting the engine.**
  - **The brake pedal seems to jolt when driving off after starting the engine.**
- **In the following circumstances, the vehicle may be less stable than it feels to the driver. The Vehicle Dynamics Control System may therefore operate. Such operation does not indicate a system malfunction.**
  - **On gravel-covered or rutted roads**
  - **On unfinished roads**
  - **When the vehicle is towing a trailer (Outback)**
  - **When the vehicle is fitted with snow tires or winter tires**
- **Activation of the Vehicle Dynamics**

Control system will cause operation of the steering wheel to feel slightly different compared to that for normal conditions.

- **It is always important to reduce speed when approaching a corner, even if the vehicle is equipped with Vehicle Dynamics Control.**
- **Always turn off the engine before replacing a tire as failure to do so may render the Vehicle Dynamics Control system unable to operate correctly.**

■ Vehicle Dynamics Control System Monitor

Refer to "Vehicle Dynamics Control Warning Light/Vehicle Dynamics Control Operation Indicator Light" ☞P186 and "Vehicle Dynamics Control OFF Indicator Light" ☞P187.

■ To Turn On/Off the Vehicle Dynamics Control System

To turn the Vehicle Dynamics Control on and off, operate the center information display. Refer to "Car settings" ☞P215 (11.6-inch display models) or "Vehicle setting icons" ☞P233 (dual 7.0-inch display models).

Creating an adequate driving wheel slip by deactivating the Vehicle Dynamics Control system temporarily may help to escape from the following situations. Turn the Vehicle Dynamics Control system off when necessary.

- A standing start on a steeply sloping road with a snowy, gravel-covered, or otherwise slippery surface
- Extrication of the vehicle when its wheels are stuck in mud or deep snow

When turning off the Vehicle Dynamics Control system during engine operation, the Vehicle Dynamics Control OFF indicator light on the combination meter illuminates. The Vehicle Dynamics Control system will be deactivated. When "Vehicle Dynamics Control" has been touched again to reactivate the Vehicle Dynamics Control system, the Vehicle Dynamics Control OFF indicator light turns off.

You should not deactivate the Vehicle Dynamics Control system except under the above-mentioned situations.

⚠ CAUTION

The Vehicle Dynamics Control system helps prevent unstable vehicle motion such as skidding using control of the brakes and engine power. Do not turn off the Vehicle Dynamics Control system unless it is absolutely necessary. If you must turn off the Vehicle Dynamics Control system, drive very carefully based on the road surface condition.

NOTE

- **When "Vehicle Dynamics Control" has been touched to deactivate the Vehicle Dynamics Control system, the Vehicle Dynamics Control system automatically reactivates itself the next time the ignition switch is turned to the "LOCK"/"OFF" position and the engine is restarted.**
- **When "Vehicle Dynamics Control" has been touched to deactivate the Vehicle Dynamics Control system, the vehicle's running performance is comparable with that of a vehicle that does not have a Vehicle Dynamics Control system. Do not deactivate the Vehicle Dynamics Control system except when absolutely necessary.**
- **Even when the Vehicle Dynamics Control system is deactivated, components of the brake control system may still activate. When the brake control system is activated, the Vehicle Dynamics Control operation indicator light flashes.**

7-14. X-MODE (Outback)

WARNING

- **Always use the utmost care in driving – overconfidence because you are driving a vehicle with X-MODE could easily lead to a serious accident.**
- **Always use the utmost care in driving – overconfidence because you are driving a vehicle with hill descent control function could easily lead to a serious accident. Be especially careful, and depress the brake pedal if necessary when driving on extremely steep downhill, frozen, muddy or sandy roads. Failure to control the vehicle's speed may cause a loss of control and result in a serious accident.**

CAUTION

- **Even if your vehicle is equipped with X-MODE, winter tires should be used when driving on snow-covered or icy roads; in addition, vehicle speed should be reduced considerably. Simply having X-MODE does not guarantee that the vehicle will be able to avoid accidents in any situation.**
- **Activate the X-MODE when you encounter a very slippery surface at low speed. However, having X-MODE is no guarantee that full vehicle control will be maintained at all times and under all conditions. When activating X-MODE, the speed of the vehicle should be reduced considerably.**
- **Whenever suspension components, steering components, or an axle are removed from a vehicle, have the system inspected by an authorized SUBARU dealer.**
- **Observe the following precautions in order to ensure that the X-MODE is operating properly:**
  - **All four wheels should be fitted with tires of the same size, type, and brand. Furthermore, the amount of wear should be the same for all four tires.**
  - **Keep the tire pressure at the proper level as shown on the label attached to the vehicle's door pillar.**
  - **Use only the special temporary spare tire to replace a flat tire. With a normal temporary spare tire, the effectiveness of the X-MODE is reduced and this should be taken into account when driving the vehicle in such a condition.**
- **If the hill descent control function has operated continuously for a long time, the temperature of the brake disc may increase and the hill descent control function may be temporarily disabled. In this case, the hill descent control indicator will disappear. When the hill descent control indicator disappears, the hill descent control function is disabled.**

X-MODE is the integrated control system of the engine, AWD and Vehicle Dynamics Control system, etc. for driving with bad road conditions. Using X-MODE, you can drive more comfortably even in slippery road conditions including uphill and downhill.

X-MODE has the following functions.

- **Hill descent control function:**

Using the hill descent control function, you can keep the vehicle at a consistent speed driving downhill. If the vehicle speed is likely to increase, the brake control system will be activated to adjust the vehicle speed.

- **Driving ability control:**

This mode increases the hill-climbing ability and driving ability as well as enabling smooth application of torque for easier control of the steering wheel.

■ To Activate/Deactivate the X-MODE

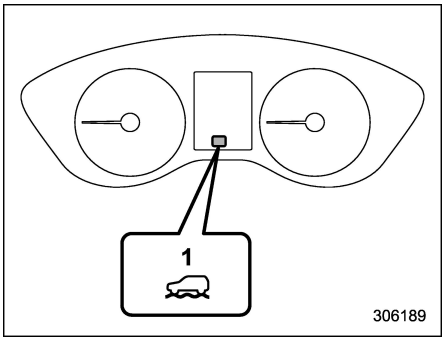

X-MODE indicator (models with 1 mode)
1) X-MODE indicator

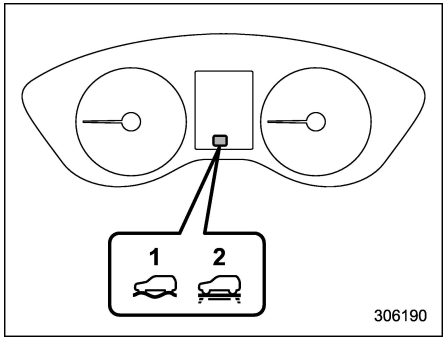

X-MODE indicator (models with 2 modes)
1) DEEP SNOW/MUD mode indicator
2) SNOW/DIRT mode indicator

To activate or deactivate the X-MODE, operate the center information display. Refer to “Car settings” ☞P215 (11.6-inch display models) or “Vehicle setting icons” ☞P233 (dual 7.0-inch display models).

NOTE

- **Even if you try to activate the X-MODE when the vehicle speed is 12 mph (20 km/h) or more, the X-MODE will not be activated. At this time, a buzzer will sound twice.**
- **If the vehicle speed reaches 25 mph (40 km/h) or more while the X-MODE is activated, a buzzer will sound once and the X-MODE will be deactivated.**
- **While the engine is running, if any of the following conditions is met, the X-MODE will be deactivated. In this case, it is not possible to activate the X-MODE.**
  - **– The CHECK ENGINE warning light/malfunction indicator light illuminates.**
  - **– The AT OIL TEMP warning light flashes.**
  - **– The ABS warning light illuminates.**
  - **– The Vehicle Dynamics Control warning light illuminates.**
- **The Auto Start Stop system will be stopped while the X-MODE is activated.**

Models with 2 modes:

- **SNOW/DIRT is suitable for driving on a snow-covered road where the points of contact between the tires and road surface are visible, or for driving on an unpaved road.**
- **D.SNOW/MUD is suitable for driving on a road covered with deep snow where the points of contact between the tires and road surface are not visible, or for driving on a muddy road.**

■ Hill Descent Control Function

The hill descent control function will be in standby mode when the X-MODE is

– CONTINUED –

activated and the vehicle speed is less than approximately 12 mph (20 km/h).

The function will operate when the vehicle speed is less than approximately 12 mph (20 km/h) and the accelerator ratio is less than approximately 10%.

The function will turn off when the vehicle speed is more than approximately 12 mph (20 km/h) and the accelerator pedal is depressed.

CAUTION

The braking power of the hill descent control function may not be sufficient when strong braking power is needed (e.g., when towing a trailer).

NOTE

- **Even while the hill descent control function is operating, you can vary the vehicle speed using the brake pedal or accelerator pedal.**
- **During braking by the hill descent control function, the hill descent control indicator will flash.**
- **The hill descent control function is operable regardless of the gradient of the road.**
- **The hill descent control function may be considered normal when the following conditions occur.**
  - **An operating sound is heard briefly from the engine compartment while the hill descent control function is operating.**
  - **The sensation of depressing the brake pedal is different, (harder than usual etc.) when the brake pedal is depressed during hill descent control function operation.**

▼ **Hill descent control indicator**

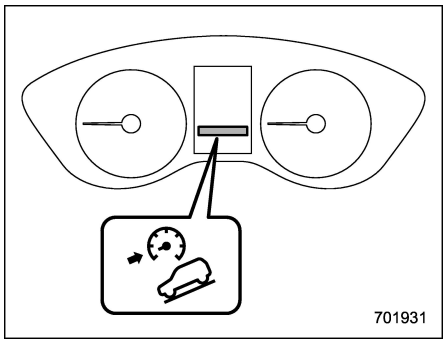

This indicator appears while the hill descent control function is in the standby mode. It flashes while the function is operating. It will disappear when the function is in the disabled mode. When this function is changed from operational to non-operational, it will disappear when the vehicle speed reaches more than approximately 18 mph (30 km/h).

7-15. Tire Pressure Monitoring System (TPMS) (U.S. Spec. Models)

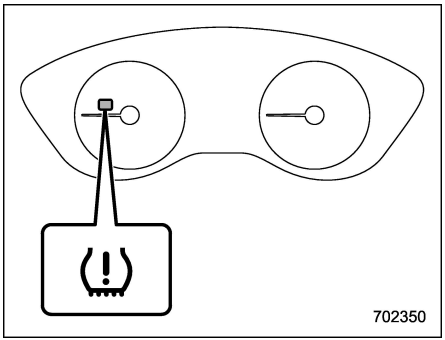

Low tire pressure warning light

The tire pressure monitoring system provides the driver with a warning message by sending a signal from a sensor that is installed in each wheel when tire pressure is severely low.

The tire pressure monitoring system will activate only when the vehicle is driven at speeds above 20 mph (32 km/h). Also, this system may not react immediately to a sudden drop in tire pressure (for example, a blow-out caused by running over a sharp object).

WARNING

- **If the low tire pressure warning light illuminates while driving, never brake suddenly. Instead, perform the following procedure. Otherwise an accident involving serious vehicle damage and serious personal injury could occur.**
  (1) Keep driving straight ahead while gradually reducing speed.
  (2) Slowly pull off the road to a safe place.
  (3) Check the pressure for all four tires and adjust the pressure to the COLD tire pressure shown on the vehicle placard on the door pillar on the driver's side.

  Even when the vehicle is driven a very short distance, the tires get warm and their pressures increase accordingly. Be sure to let the tires cool thoroughly before adjusting their pressures to the standard values shown on the tire placard. Refer to "Tires and Wheels" ☞P492. The tire pressure monitoring system does not function when the vehicle is stationary. After adjusting the tire pressures, increase the vehicle speed to at least 20 mph (32 km/h) to start the TPMS rechecking of the tire inflation pressures. If the tire pressures are now above the severe low pressure threshold, the low tire pressure warning light should turn off a few minutes later.

  If this light still illuminates while driving after adjusting the tire pressure, a tire may have significant damage and a fast leak that causes the tire to lose air rapidly. If you have a flat tire, replace it with a spare tire as soon as possible.
- **When a spare tire is mounted or a wheel rim is replaced without the original pressure sensor/transmitter being transferred, the low tire pressure warning light will illuminate steadily after blinking for approximately one minute. This indicates the TPMS is unable to monitor all four road wheels. Contact your SUBARU dealer as soon as possible for tire and sensor replacement and/or system resetting.**
- **When a tire is repaired with liquid**

– CONTINUED –

sealant, the tire pressure warning valve and transmitter may not operate properly. If a liquid sealant is used, contact your nearest SUBARU dealer or other qualified service shop as soon as possible. Make sure to replace the tire pressure warning valve and transmitter when replacing the tire. You may reuse the wheel if there is no damage to it and if the sealant residue is properly cleaned off. Do not inject any tire liquid or aerosol tire sealant into the tires, as this may cause a malfunction of the tire pressure sensors. If the light illuminates steadily after blinking for approximately one minute, promptly contact a SUBARU dealer to have the system inspected.

CAUTION

Do not place metal film or any metal parts under the driver's seat. This may cause poor reception of the signals from the tire pressure sensors, and the tire pressure monitoring system will not function properly.

FCC ID: CWTD1G141

NOTE

This device complies with part 15 of the FCC Rules. Operation is subject to the following two conditions: (1) This device may not cause harmful interference, and (2) this device must accept any interference received, including interference that may cause undesired operation.

FCC CAUTION

Changes or modifications not expressly approved by the party responsible for compliance could void the user's authority to operate the equipment.

■ TPMS Screen

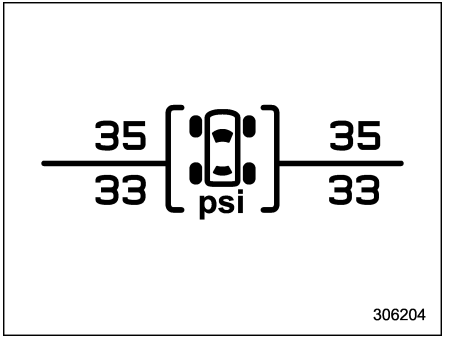

This screen displays each tire pressure. Refer to "Basic Screens" ☞P201.

7-16. Parking Your Vehicle

WARNING

- **Never leave unattended children or pets in the vehicle. They could accidentally injure themselves or others through inadvertent operation of the vehicle. Also, on hot or sunny days, the temperature in a closed vehicle could quickly become high enough to cause severe or possibly fatal injuries to them.**
- **Do not park the vehicle over flammable materials such as dry grass, waste paper or rags, as they may burn easily if they come near hot engine or exhaust system parts.**
- **Be sure to stop the engine if you take a nap in the vehicle. If engine exhaust gas enters the passenger compartment, occupants in the vehicle could die from carbon monoxide (CO) contained in the exhaust gas.**

■ Electronic Parking Brake

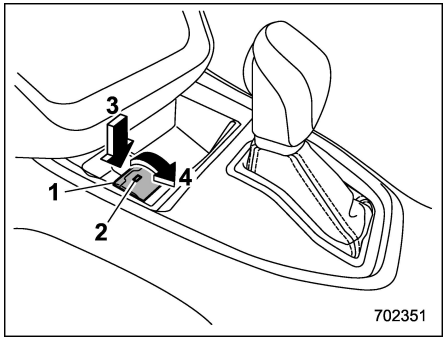

1) Parking brake switch
2) Indicator light
3) Release the electronic parking brake
4) Apply the electronic parking brake

WARNING

- **Before exiting the vehicle, make sure that you turn off the engine. Otherwise, the parking brake may be released and an accident may occur.**
- **If the brake system warning light turns on, the electronic parking brake system may be malfunctioning. Immediately stop your vehicle in a safe location, use tire stops under the tires to prevent the vehicle from moving and contact your SUBARU dealer.**
- **If the electronic parking brake is operated under the following conditions, the electronic parking brake indicator light may flash.**
  - **The brake is overheated**
  - **The vehicle is on a steep slope**

  In such cases, the vehicle may start to move which may lead to an accident. Always use the tire stops.

CAUTION

- **When the electronic parking brake cannot be applied due to a malfunction, contact your SUBARU dealer immediately for an inspection. If you have to park your vehicle in such conditions, perform the following procedure.**
  - **Stop your vehicle in a flat location.**
  - **Shift the select lever in the "P" position. When the select lever cannot be shifted into the "P" position, you must release shift lock. Refer to "Shift Lock**

– CONTINUED –

Function” ☞P339.

– Use tire stops under the tires to prevent the vehicle from moving.

- **Never drive with the parking brake applied. Doing so will cause unnecessary brake pad wear. Before driving off, always make sure that the parking brake has been released and the brake system warning light has turned off.**
- **The braking power of the electronic parking brake may not be sufficient when strong braking power is needed (e.g., when parking on a steep slope while towing a trailer (Outback)).**

Your vehicle is equipped with an electronic parking brake. You can apply/release the parking brake by operating the parking brake switch.

To apply: Depress the brake pedal and pull up the parking brake switch.

To release: Press the parking brake switch firmly while the ignition switch is in the “ON” position and the brake pedal is depressed.

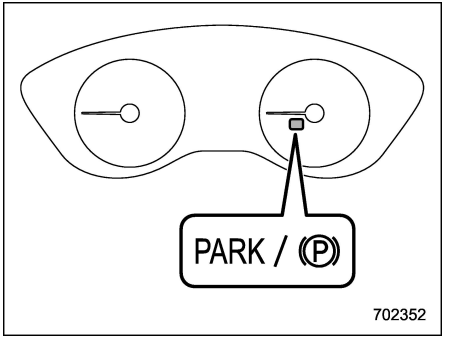

Electronic parking brake indicator light

When the parking brake is applied while the ignition switch is in the “ON” position, the following indicator lights illuminate.

- the indicator light on the parking brake switch
- the electronic parking brake indicator light on the combination meter (for details, refer to “Electronic Parking Brake Indicator Light” ☞P183.)

NOTE

- **The parking brake will not be released under the following conditions even if the parking brake switch is pressed.**

  – The ignition switch is in the “ACC” or “LOCK”/“OFF” position.

  – The brake pedal is not depressed.

- **The electronic parking brake system uses motors to apply the parking brake. Therefore, operating sounds from the motors will be heard when applying or releasing the parking brake. Make sure that the motor sounds are heard when applying or releasing the parking brake.**
- **When the electronic parking brake system has a malfunction or the electronic parking brake operation is prohibited temporarily, if the parking brake switch is operated, a chirp sound is heard and the electronic parking brake indicator light flashes.**
- **When you cannot release the parking brake due to, for example, a system malfunction, contact your SUBARU dealer and have your SUBARU dealer release the parking brake.**
- **If the operation of the electronic parking brake switch is stopped midway or performed extremely slowly, the system may detect an error and turn on the brake system warning light. However, this does not indicate a malfunction if the warning light turns off after operating the switch.**
- **When the electronic parking brake has not been used for a long period of time, the electronic parking brake may operate automatically after the ignition switch is turned to the “LOCK”/“OFF”**

position. This occurs due to checking the proper operation of the electronic parking brake and does not indicate a malfunction.

- **If the electronic parking brake switch is malfunctioning and the electronic parking brake cannot be released, refer to the instructions described in "Automatic release function by accelerator pedal" ☞P357.**
- **After activating the electronic parking brake, you may hear a short sound several minutes after the electronic parking brake indicator light and the indicator light on the electronic parking brake switch illuminate as the system confirms proper engagement. This sound is different from the apply and release sound.**

This can occur:

– If the brakes are extremely hot.

– If the car is parked on a steep incline.

– If the electronic parking brake is applied after the ignition switch is turned OFF.

This is a normal operating sound under any of these conditions.

- **The Auto Start Stop system is deactivated while the electronic parking brake is applied.**
- **If you operate the electronic parking brake switch while the Auto Start Stop system is activated, the Auto Start Stop system will be deactivated. The electronic parking brake will activate after the engine is restarted. After the electronic parking brake indicator light is illuminated, release your foot from the brake pedal.**
- **When starting the engine or restarting the engine using the Auto Start Stop system, if you operate the electronic parking brake switch, the electronic parking brake indicator light may flash temporarily. However, this is not a malfunction if the light turns off after the electronic parking brake is deactivated.**

▼ Automatic release function by accelerator pedal

The electronic parking brake system has an automatic release function. The parking brake will be automatically released by depressing the accelerator pedal. However, the automatic release function does not operate under the following conditions.

- Any door (other than the trunk lid or rear gate) is open.
- The driver's seatbelt is not fastened.

If the parking brake is automatically released, the electronic parking brake indicator light and the indicator light on the parking brake switch turn off.

NOTE

Even if you have applied the parking brake, the parking brake will be automatically released when the accelerator pedal is depressed.

▼ Auto Vehicle Hold function

The Auto Vehicle Hold function will automatically keep the vehicle stopped even after releasing the brake pedal when the vehicle is at a complete stop, such as at traffic signals. The function will be canceled by either of the following operations.

- Depressing the accelerator pedal
- Depressing the brake pedal again

⚠ WARNING

- **Do not use the Auto Vehicle Hold function on a steep hill or slippery road. The vehicle may move even when using the Auto Vehicle Hold function, causing serious injury or accidents.**
- **Do not use the Auto Vehicle Hold function to park the vehicle. The vehicle may move unexpectedly, causing serious injury or accidents. Make sure to shift the**

– CONTINUED –

select lever to the "P" position and apply the electronic parking brake in the following cases.

- **When you are going to park your vehicle.**
- **When passengers are getting in or out of the vehicle.**
- **When you are loading or unloading.**

- **When using the Auto Vehicle Hold function, do not release the brake pedal before the Auto Vehicle Hold operation indicator illuminates. The vehicle may move unexpectedly, causing serious injury or accidents.**
- **Deactivate the Auto Vehicle Hold function in the following cases. Otherwise, the vehicle may move unexpectedly, causing serious injury or accidents.**
  - **When washing your vehicle in an automatic car wash**
  - **When being towed**

CAUTION

- **When stopping on a steep slope with the Auto Vehicle Hold function turned on, the electronic parking brake may be automatically applied. Then the electronic parking brake indicator light will flash. In such a case, depress and hold the brake pedal while stopping. Otherwise, the vehicle may move.**
- **When being towed, turn off the Auto Vehicle Hold function.**

NOTE

We recommend turning on the Auto Vehicle Hold function when stopping on an incline. If the Auto Vehicle Hold function is turned off, the vehicle may roll backward when driving off.

▽ To turn on/off the Auto Vehicle Hold function

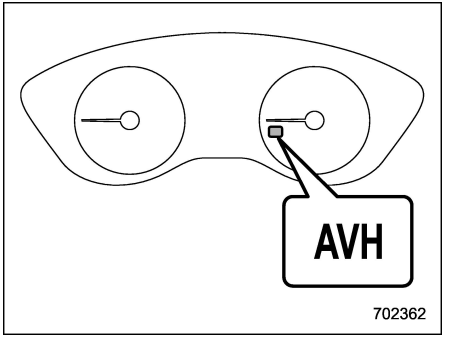

Auto Vehicle Hold ON indicator light

To turn the Auto Vehicle Hold function on and off, operate the center information display. Refer to "Car settings" ☞P215 (11.6-inch display models) or "Vehicle setting icons" ☞P233 (dual 7.0-inch display models).

When the Auto Vehicle Hold function is turned OFF, the Auto Vehicle Hold ON indicator light will turn off.

NOTE

- **When the electronic parking brake system has a malfunction while the Auto Vehicle Hold function is turned on, a chirp will sound, the Auto Vehicle Hold ON indicator light will turn off and**

the brake system warning light will turn on.

- **Every time when starting the engine, the Auto Vehicle Hold function will be set to "OFF".**

▽ To operate the Auto Vehicle Hold function

Stop the vehicle by depressing the brake pedal when all of the following conditions are met. Then the Auto Vehicle Hold function will operate.

- Driver's door is closed.
- The driver's seatbelt is fastened.
- The select lever is in a position other than the "P" position.

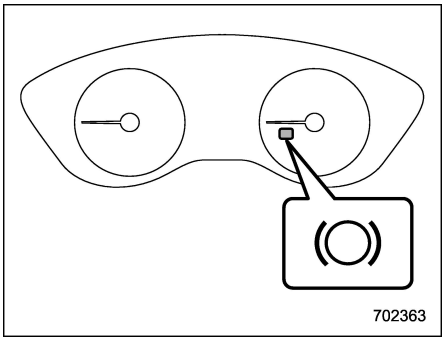

Auto Vehicle Hold operation indicator light

While the vehicle is kept stopped by the Auto Vehicle Hold function, the Auto Vehicle Hold operation indicator light will illuminate.

▽ To release the Auto Vehicle Hold function

Perform any of the following operations to release the Auto Vehicle Hold function.

- Depress the accelerator pedal.
- Depress the brake pedal again.
- Apply the electronic parking brake.
- Shift the select lever to the "P" position with the brake pedal pressed.
- Deactivate the Auto Vehicle Hold function operating with the center information display while depressing the brake pedal.

When the Auto Vehicle Hold function is released, the Auto Vehicle Hold operation indicator light will turn off.

Under any of the following conditions, the Auto Vehicle Hold function will be automatically released and the electronic parking brake will be automatically applied.

- The Auto Vehicle Hold function has been in operation for 10 minutes.
- The driver's seatbelt is unfastened.
- The ignition switch is turned to the "LOCK"/"OFF" position.
- The vehicle is stopped on a steep slope.
- The Auto Vehicle Hold function is malfunctioning.

In such cases, the Auto Vehicle Hold operation indicator light will turn off and the electronic parking brake indicator light will illuminate.

▽ Tips

- When the electronic parking brake is automatically applied with the vehicle kept stopped by the Auto Vehicle Hold function, release the electronic parking brake by either of the following operations before starting off. Then make sure that the electronic parking brake indicator light is off.
  - Depress the accelerator pedal with the driver's seatbelt fastened and with the doors closed.
  - Press the electronic parking brake switch with the brake pedal depressed.
- Under certain conditions, including a malfunction of the Auto Vehicle Hold, a warning buzzer will sound and a warning message will appear on the combination meter display (color LCD). All warning messages should be strictly observed.
- On a steep slope, the vehicle cannot be kept stopped by the Auto Vehicle Hold function. In such a case, depress and hold

– CONTINUED –

the brake pedal.

- When stopping on a steep slope with the Auto Vehicle Hold function activated, the electronic parking brake may automatically applied after stopping, then the electronic parking brake indicator light may flash. In such a case, depress and hold the brake pedal while stopped. Otherwise, the vehicle may move. When getting out of the vehicle, stop the vehicle on a flat surface, then apply the electronic parking brake.
- If the Auto Vehicle Hold ON indicator light does not illuminates even after touching “Auto Vehicle Hold (AVH)” with the operating conditions met, the function may have a malfunction. Contact your SUBARU dealer for an inspection.
- You may hear a sound while the Auto Vehicle Hold function is keeping your vehicle stopped. This is normal, and does not represent a malfunction.
- While the vehicle is kept stopped by the Auto Vehicle Hold function, the brake pedal may feel stiff. However, this is not a malfunction.
- When using the Auto Vehicle Hold function, depress the brake pedal firmly. Otherwise, the Auto Vehicle Hold may not operate.

▼ Emergency brake

CAUTION

Use the emergency brake only in case of an emergency. If the emergency brake is excessively used, the brake parts will wear down faster or the brake may not work sufficiently due to brake overheating.

NOTE

- **While using the emergency brake, the electronic parking brake indicator light and the indicator light on the parking brake switch illuminate and a chirp sounds.**
- **While using the emergency brake, a sound may be heard from the engine compartment. This is the operating sound of the brake that is activated by the Vehicle Dynamics Control system, and does not indicate a malfunction.**

If the foot brake has a malfunction, you can stop the vehicle by pulling the parking brake switch continuously.

While applying the emergency brake, the electronic parking brake indicator light and the indicator light on the parking brake switch illuminate and a chirp sounds.

▼ Electronic parking brake system warning

CAUTION

If the brake system warning light turns on, the electronic parking brake system may be malfunctioning. Immediately stop your vehicle in the nearest safe location and contact your SUBARU dealer.

If a malfunction occurs in the electronic parking brake system, the brake system warning light turns on. Refer to “Electronic parking brake system warning” ☞P183.

■ Parking Tips

When parking your vehicle, always perform the following items.

- Apply the parking brake.
- Place the select lever in the “P” (Park) position.

Never rely on the transmission alone to hold the vehicle.

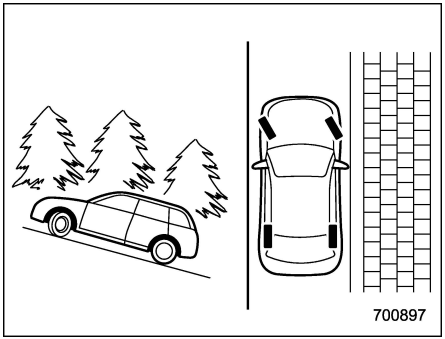

When parking on a hill, always turn the steering wheel as described here. When the vehicle is headed up the hill, the front wheels should be turned away from the curb.

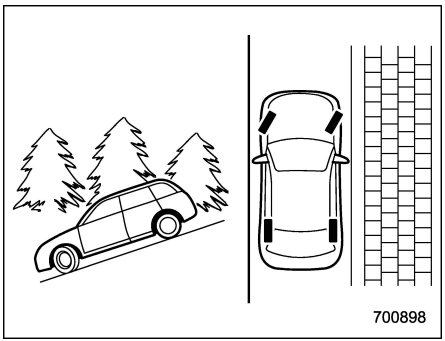

When facing downhill, the front wheels should be turned into the curb.

7-17. Auto Start Stop System

The Auto Start Stop system is designed to automatically stop and restart the engine when the vehicle is stationary for a short period of time (while waiting for a traffic light or in a traffic jam) after the engine has warmed up. The system operates in order to reduce fuel consumption, exhaust emissions and undesired idling noise.

■ System Operation

⚠ CAUTION

The Auto Start Stop system is designed to automatically stop and restart the engine for a short period of time during idling. Do not use the system when parking the vehicle normally.

So that it can be used safely and comfortably, in addition to driver operations, the Auto Start Stop system is designed to constantly monitor the vehicle conditions as well as the environment inside and outside the vehicle, in order to control stopping and restarting of the engine.

After the vehicle has been completely stopped by depressing the brake pedal with the select lever in the “D” position, the

– CONTINUED –

engine will be automatically stopped.

If you release the brake pedal with the select lever kept in the “D” position, the engine will be automatically restarted.

However, when the Auto Vehicle Hold ON indicator light illuminates, the engine will not restart.

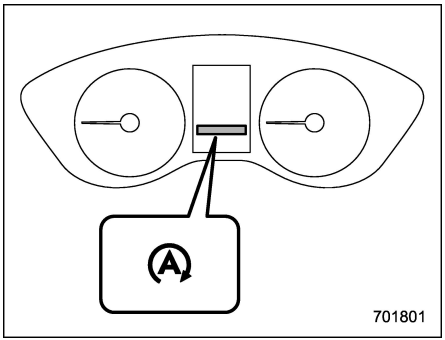

Auto Start Stop indicator light (green)

If the engine is temporarily stopped by the system, the Auto Start Stop indicator light on the combination meter will illuminate in green. This indicator light will turn off when the system restarts the engine.

NOTE

- **After starting the engine, if the vehicle is left idling without being driven, the Auto Start Stop system will not operate.**
- **Your vehicle is equipped with a special high-performance battery. When replacing the vehicle battery, be sure to replace it with a genuine SUBARU battery (or equivalent) designed specifically for use in a vehicle equipped with the Auto Start Stop system. For details, consult your SUBARU dealer.**

▼ Operational conditions

The engine can be automatically stopped by the Auto Start Stop system when all of the following conditions are met.

- The engine is sufficiently warmed up.
- The engine hood is closed.
- The driver’s door is closed.
- The driver’s seatbelt is fastened.
- The malfunction indicator light (Check Engine light) is off.
- The airflow mode selection is set to a mode other than “” mode.
- The rear window defogger is not in use.
- The X-MODE has been turned off (if equipped).
- The power rear gate has been turned off (if equipped).

After the vehicle is stopped, the engine will be automatically stopped when the following conditions are met.

- The steering wheel is in the straight ahead position.
- The steering wheel is not being operated.

NOTE

- **After the vehicle is stopped, the engine may not automatically stop under the following conditions.**
  - **– The vehicle is stopped on a road with a steep slope.**
  - **– The vehicle is stopped by hard braking.**
  - **– Negative pressure in the brake booster is not sufficient.**
- **After the vehicle is stopped, the engine may not automatically stop if the brake pedal is not fully depressed. Make sure to depress the brake pedal firmly when stopping the vehicle.**
- **In the following cases, it may take some time for the Auto Start Stop system to operate.**
  - **– When the battery is discharged because the vehicle has not been used for a long period of time, etc.**
  - **– The coolant temperature is low.**
  - **– When the battery terminals have been reconnected after replacing the battery, etc.**

▼ **Non-operational conditions**

In any of the following cases, the Auto Start Stop system will not operate.

- When the Auto Start Stop warning light/ Auto Start Stop OFF indicator light is illuminating.
- When the malfunction indicator light (Check Engine light) is illuminating.
- The electronic parking brake is applied.
- When the engine hood is opened.
- When the vehicle is at an altitude of more than approximately 10,000 ft (3,000m).
- When the CVT fluid is not sufficiently warmed up.
- When the temperature of the CVT fluid is abnormally high.
- When the vehicle battery is not in good condition.
- When using the climate control system, the temperature difference between the setting temperature and the temperature inside the vehicle is significant.
- When using the climate control system, the amount of air flow is significant.

NOTE

The Auto Start Stop system may not operate if the malfunction indicator light (Check Engine light) or other warning lights on the combination meter are illuminating.

▼ **Engine restart operational conditions**

In any one of the following cases, the engine will be automatically restarted even if the brake pedal is kept depressed.

- When slightly releasing the brake pedal on road with a steep slope and the vehicle begins rolling.
- When further depressing the brake pedal.
- When depressing the accelerator pedal.
- When you move the select lever to the "R" position.
- When turning the steering wheel.
- When operating the electronic parking brake switch.
- When activating the X-MODE (if equipped).
- When the air flow mode selection set to "" mode.
- When the climate control system can no longer maintain the set temperature.
- When opening the power rear gate automatically.
- When unbuckling the driver's seatbelt.
- When trying to open the power rear gate automatically.
- When opening the driver's door.
- When activating the rear window defogger.
- When the Auto Vehicle Hold function is released, refer to "Auto Vehicle Hold function" ☞P357.

▼ **Engine restart non-operational conditions**

To ensure safety, the engine will not be automatically restarted if the engine hood is opened when the Auto Start Stop system is in operation, even if the brake pedal is released. In this case, check the surrounding area and restart the engine by normal operation.

Also, when the Auto Vehicle Hold operation indicator light is illuminated, the engine will not restart.

To ensure safety, the engine will not be automatically restarted if you open the engine hood when the Auto Start Stop system is in operation, even if you release the brake pedal. In this case, check the surrounding area and restart the engine by normal operation.

NOTE

- **When the Auto Start Stop system is in operation, the brake pedal may feel stiff. However, this is not a malfunction.**
- **In the following conditions, the engine will be automatically restarted even if you keep the brake pedal**

– CONTINUED –

depressed.

– When the battery is discharged.

– When the negative pressure in the brake booster has lowered

● In the following cases, the length of time that the engine is temporarily stopped by the Auto Start Stop system may be shorter.

– When the climate control system is in operation.

– When the outside temperature is high, or when it is low (because the climate control system can no longer maintain the set temperature).

– When consumption of electricity by electrical components is high.

● When the engine is automatically restarted by the Auto Start Stop system, the power provided via the accessory power outlet will be reduced. Depending on the connected appliance, the power of the appliance may temporarily turn off.

▼ Auto Start Stop warning light

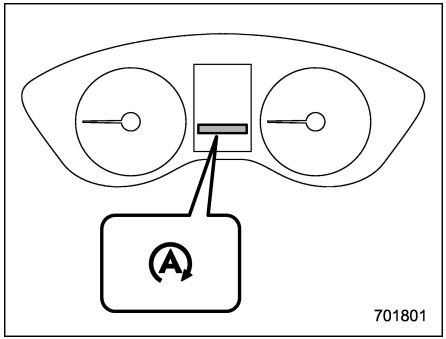

Auto Start Stop warning light (yellow)

The Auto Start Stop warning light will illuminate in yellow when initially turning the ignition switch to the “ON” position. The light will turn off after the engine has started.

⚠ CAUTION

If the Auto Start Stop warning light does not turn off after the engine has started, the Auto Start Stop system may be malfunctioning. We recommend that you contact your authorized SUBARU dealer for an inspection.

▼ To turn on/off the Auto Start Stop system

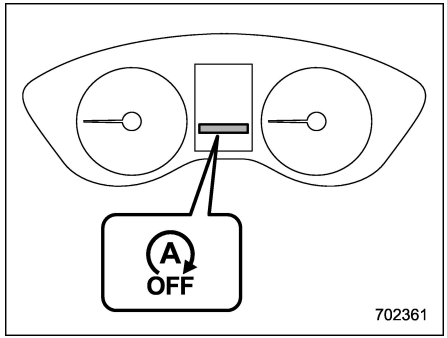

Auto Start Stop OFF indicator light

To turn the Auto Start Stop system on and off, operate the center information display. Refer to “Car settings” ☞P215 (11.6-inch display models) or “Vehicle setting icons” ☞P233 (dual 7.0-inch display models).

When the Auto Start Stop system is turned OFF, the Auto Start Stop OFF indicator light on the combination meter display (color LCD) will illuminate.

While the engine is temporarily stopped by the system, if the Auto Start Stop system turns off, the engine will be restarted even if you do not release the brake pedal.

NOTE

- **If the engine is restarted when the Auto Start Stop system is not operational and the ignition switch has been turned to the "LOCK"/"OFF" position, the Auto Start Stop system will turn on again.**
- **Be sure to turn the ignition switch to the "LOCK"/"OFF" position when leaving the vehicle. Failure to do so could result in the battery discharging.**

▼ Auto Start Stop No Activity Detected indicator light

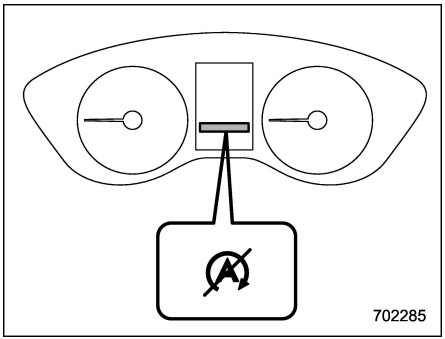

Auto Start Stop No Activity Detected indicator light

If the operational conditions are not met when the vehicle is stopped, the engine will not stop and the Auto Start Stop No Activity Detected indicator light will illuminate. It will turn off when the vehicle begins to drive.

■ Displaying the Auto Start Stop System Status

Approximate indications of the time that the engine has been stopped by the Auto Start Stop system and/or the amount of fuel saved can be displayed on the combination meter display (color LCD). For details, refer to "Basic Screens" ☞P201.

■ System Warning

So that it can be used safely and comfortably, the Auto Start Stop system is designed to constantly monitor the vehicle conditions as well as the environment inside and outside the vehicle in addition to driver operations, and to provide various warnings to the driver via the warning light and/or indicator light illuminating and a buzzer sounding. For details about the warning light and indicator light, refer to "Auto Start Stop Warning Light (Yellow)" ☞P194.

▼ Warning buzzer

The buzzer will sound when the engine hood is opened while the engine is stopped by the Auto Start Stop system.

When this occurs, the buzzer will stop sounding when the following operations are performed.

- The engine is restarted by normal operation. (Refer to "Preparing to Drive" ☞P324.)
- The ignition switch is turned to the "LOCK"/"OFF" position.

▼ Display of warning messages

If a warning message is displayed on the combination meter display (color LCD) while driving, a malfunction may have occurred in the Auto Start Stop system. In this case, the Auto Start Stop warning light will illuminate. We recommend that you have your vehicle inspected at a SUBARU dealer as soon as possible.

7-18. Front View Monitor (If Equipped)

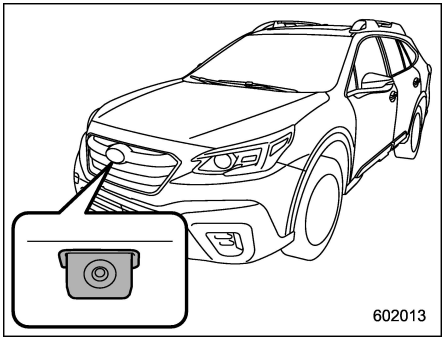

The image from the camera mounted inside the front grille is displayed in the center information display.

WARNING

- **Never rely on only the Front View Monitor when driving the vehicle. The image on the monitor screen may be different from the actual situation. If you drive the vehicle by viewing only the monitor image, a collision or an unexpected accident may occur. When driving the vehicle, always check the traffic around the vehicle directly with your eyes and the mirrors.**
- **Always operate the vehicle as you would without the Front View Monitor.**
- **Do not use the Front View Monitor in the following situations.**
  - **You are driving on a dirt road or a road covered in snow.**
  - **The camera malfunctions (e.g. the lens or bracket is broken).**
- **If the outside temperature is low, the monitor screen may become dark or the image may become dim. In particular, the image of a moving object may be distorted or disappear from the screen. You must always check the traffic around the vehicle directly with your eyes when driving it.**

NOTE

If there is a malfunction on the center information display, refer to "Malfunctions of the Center Information Display" ☞P459.

■ How to Access the Front View Monitor

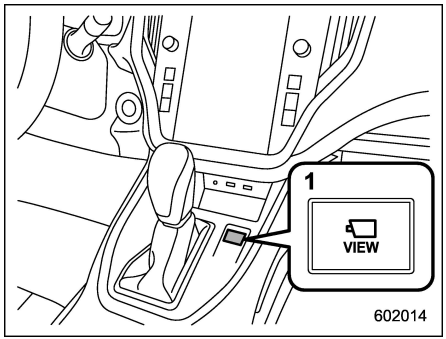

1) Front view monitor switch

To change over to the camera screen, make sure the ignition switch is in the "ON" position, then press the front view monitor switch under the following conditions.

- The vehicle speed is below 12 mph (20 km/h).
- The select lever is in except "R".

NOTE

The screen will change over to the rear view image when the select lever is moved to "R". Refer to "Rear View Camera" ☞P369.

■ How to Cancel the Front View Monitor

▼ Manual cancellation

Press the front view monitor switch again.

▼ Automatic cancellation

If any of the following conditions are met, the Front View Monitor is canceled automatically.

After accessing the Front View Monitor by pressing the front view monitor switch:

- Approximately 3 minutes have passed since the last operation.
- The vehicle speed becomes 12.5 mph (20 km/h) or higher.
- The select lever is shifted to the “P” position.
- Pulling up the parking brake switch with the brake pedal depressed to apply the parking brake.

■ Range of Image on Screen

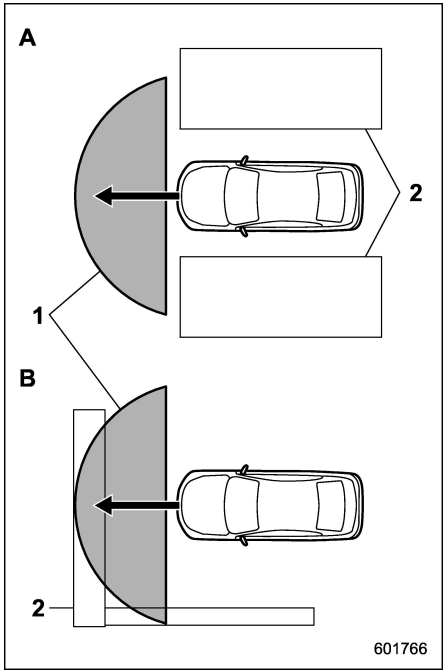

A) Traffic intersection with a poor visibility view
B) Parking facing a wall
1) Range of displayed image
2) Obstacles (e.g., buildings, fences or other vehicles)

⚠ WARNING

Because the range of the image captured by the camera is limited, always check the traffic around the vehicle directly with your eyes when driving the vehicle.

NOTE

- **The range of the displayed image may differ depending on the vehicle status or the road surface status.**
- **Because the Front View Monitor system uses a specially designed lens, the sense of distance in the displayed image is different from the actual distance.**
- **The camera image may be difficult to view in the following situations. This is not a malfunction.**
  - **– Dark place (at night)**
  - **– High or low temperature around the lens**
  - **– Water contacts lens or in high humidity (rainy weather)**
  - **– There is foreign materials (such as mud) around the camera**
  - **– Sunlight or headlight beam directly shines towards the camera lens**
- **Under an artificial light such as a**

– CONTINUED –

fluorescent lamp, sodium-vapor lamp or mercury lamp, the lighted portion may look like it is flickering (flicker phenomenon).

- **While the display has cooled down, the image may leave traces or become darker than usual, causing a difficulty in viewing the screen. Always check the traffic around the vehicle directly with your eyes while driving the vehicle.**
- **The following incidents should not be deemed a malfunction.**
  - **– The camera lens may become foggy when the humidity is high on a rainy day.**
  - **– The light from a vehicle or building located ahead may be reflected towards the camera image while driving at night.**
  - **– In a dark place or while driving at night, the camera image may be adjusted to make noises less visible. Therefore, the image may look like a monochromatic image or the image colors may differ from the actual colors. The camera image may be deteriorated in regard to sharpness at the center and four corners of the screen. This is not a malfunction.**

■ Guiding Line

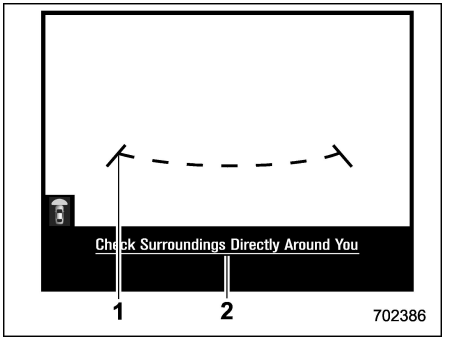

1) Guiding line
2) Warning message

The guiding line that indicates the width and the front end of your vehicle is displayed on the display.

■ Handling of Camera

⚠ CAUTION

Observe the following instructions. Otherwise, the system may malfunction.

- **Do not apply any strong impact to the camera such as banging it or hitting it with an object. The mounting angle may change.**
- **The camera unit is a waterproof structure. Do not attempt to remove, disassemble or modify the unit.**
- **Do not rub strongly or polish the camera lens with a hard brush or abrasive compounds. The lens may be scratched resulting in an adverse effect to the camera image.**
- **The camera lens is made of glass or plastic. Do not allow any organic solvent, body wax, oil film remover or glass coating agent to become attached on the lens surface. If any becomes attached, remove it immediately.**
- **Do not expose the camera lens to any sudden temperature change, for example, spraying hot water on it in cold weather.**
- **Do not apply the water jet of a high pressure washer to the camera or the surrounding area when cleaning the vehicle. The impact by the strong water pressure may cause the camera to come off. Also, water may enter inside the camera and cause a malfunction.**
- **If the camera is exposed to any impact, it may lead to malfunction**

of the camera. Have the camera inspected by your SUBARU dealer as soon as possible.

- Do not use a steam cleaner under any circumstances. Some types of steam cleaners inject hot steam.
- The camera surface may be damaged by a flying stone.

NOTE

If the camera lens is contaminated, no sharp image is available. When the camera is contaminated with water drops, snow or mud, wash it with water and wipe away any moisture with a soft cloth. If it heavily gets dirty, wash it with a neutral detergent.

7-19. Rear View Camera

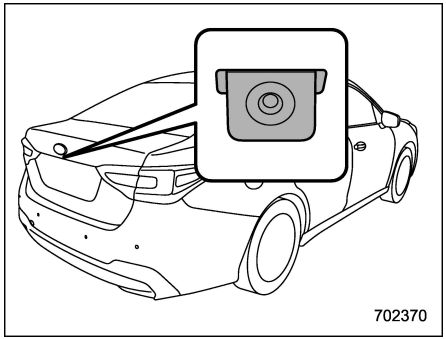

A rear view camera is attached to the trunk lid (Legacy) or rear gate (Outback). When the ignition switch is in the “ON” position and the select lever is set to “R”, the rear view camera automatically displays the rear view image behind the vehicle on the center information display.

WARNING

- **Since the rear view camera uses a wide-angle lens, the image on the monitor is different from the actual view in terms of distance.**
- **Since the range of the image on the monitor is limited, always check the rear view and the surrounding area with your eyes and mirrors, and move backward at a slow speed. Moving backward only by checking the rear view image from the camera could cause an accident.**
- **Do not disassemble or modify the camera, switch or wiring. If smoke comes out or you smell a strange odor, stop using the rear view camera immediately. Contact your SUBARU dealer for an inspection. Continued use may result in accident, fire or electric shock.**

CAUTION

- **When washing your vehicle with a high-pressure washer, do not allow water to touch the camera directly. Entry of water in the camera lens may result in condensation, malfunction, fire or electric shock.**
- **Since the camera is a precision device, do not subject it to strong impacts. Otherwise, malfunction, fire or electric shock may occur.**
- **If mud or snow sticks to or is frozen on the camera, you must**

– CONTINUED –

be very careful when removing it. Otherwise, damage to the camera may cause a fire or electric shock. Pour water or lukewarm water over the camera to remove mud and ice, and wipe it with a soft, dry cloth.

- Do not put a flame close to the camera or wiring. Otherwise, damage or fire may occur.

CAUTION

- When replacing the fuse, be sure to use a fuse with the specified rating. Use of a fuse with a different rating may result in a malfunction.
- If you use the rear view camera for a long time while the engine is not operated, the battery may become completely discharged.

NOTE

- Do not wipe the camera with alcohol, benzine or paint thinner. Otherwise, discoloration may occur. To remove contamination, wipe the camera with a cloth moistened with a diluted neutral detergent. Then wipe it with a soft, dry cloth.
- When waxing the vehicle, be careful not to apply the wax to the camera. If it comes in contact with the camera, moisten a clean cloth with a diluted neutral detergent to remove the wax.
- The camera lens has a hard coating to help prevent scratches. However, when washing the vehicle or cleaning the camera lens, be careful not to scratch the camera lens. Do not use a washing brush directly on the camera lens. The image quality of the rear view camera may deteriorate.
- Strong light shined on the camera lens may develop vertical lines around the light source. This is not a malfunction.
- Under the fluorescent light, the display may flicker. However, this is not a malfunction.
- The image of the rear view camera may be slightly different from the actual color of the objects.
- If there is a malfunction on the center information display, refer to “Malfunctions of the Center Information Display” ☞P459.

■ How to Use the Rear View Camera

When the select lever is set to “R”, the rear view camera automatically displays the rear view image from the vehicle. When the lever is set to other positions, the image before setting to “R” is displayed.

1. Set the ignition switch to “ON”.
2. Set the select lever to “R”.

NOTE

- The image of the rear view camera is horizontally reversed as is the case with the vehicle inside mirror or the outside mirror.
- When “Rear Camera Delay Control” is on, the rear view image will be displayed on the center information display for a certain period of time after the select lever is shifted to a position other than the “P” position from “R”. To turn the function on and off, refer to “General settings” ☞P211 (11.6-inch display models) or “General settings” ☞P228 (dual 7.0-inch display models).
- It may be difficult to see the image of the rear view camera in the following cases. This is not a malfunction of the camera.
  - The vehicle is in a dark place (at night, in a tunnel, etc.).
  - The vehicle is in an extremely hot or cold place.
  - An object (such as raindrops,

snow, dirt, etc.) that disturbs the view of the rear view camera sticks to the lens of the camera.
– Strong light is shining directly on the camera lens (occasionally, there are vertical lines on the screen).

■ Viewing Range on the Screen

CAUTION

The range that can be viewed with the rear view camera is limited. Always be sure to check with your eyes when moving backward and proceed slowly. Otherwise, it may cause an accident or injury.

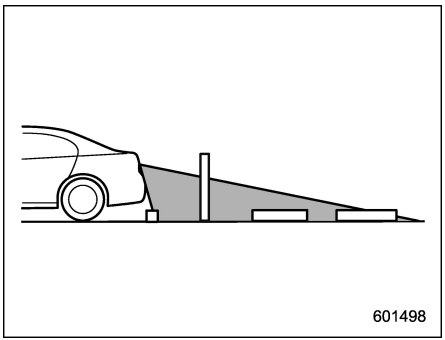

Range of view

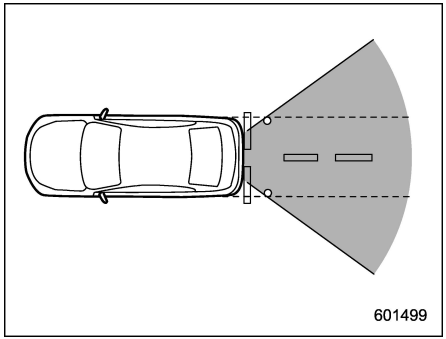

Range of view

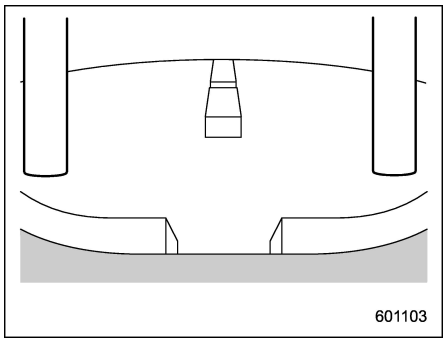

Image from camera

The area from the rear end of the bumper can be viewed. Areas at both ends of the bumper and areas just under the bumper cannot be viewed.

Also, the image from the rear view camera looks shorter than the actual distance.

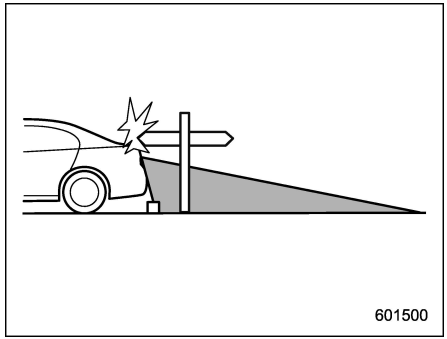

Range of view

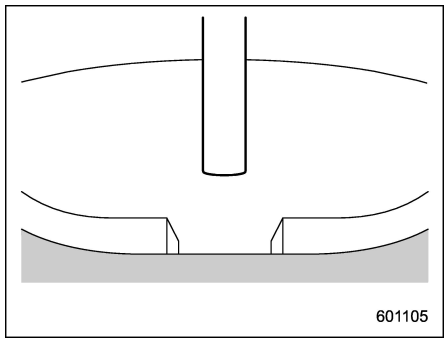

Image from camera

The area above the camera cannot be viewed. If there is an object that has a wide

– CONTINUED –

projection on its upper part such as a sign pole behind the vehicle, the projection cannot be seen on the screen.

■ Help Lines

The help lines are a guide to help you realize the actual distance from the screen image.

NOTE

If you shift to the "R" range within several seconds after turning on the ignition switch, the warning message may not be displayed. Wait for several seconds after turning on the ignition switch before shifting to the "R" range. Then, the warning message will be displayed.

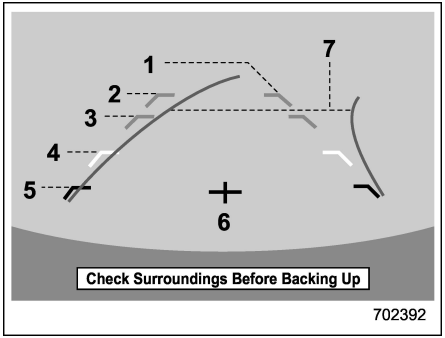

Help lines

1) Vehicle width line (oblique vertical line)
2) Approx. 10 ft (3 m) from the bumper (green horizontal line)
3) Approx. 6 ft (2 m) from the bumper (green horizontal line)
4) Approx. 3 ft (1 m) from the bumper (yellow horizontal line)
5) Approx. 1.5 ft (0.5 m) from the bumper (red horizontal line)
6) Vehicle centerline
7) Dynamic guidelines

When the select lever is set to "R", the monitor screen displays the help lines together with the rear view image.

⚠ CAUTION

- **When moving backward, always check the back with your eyes without relying on the help lines. Otherwise, it may cause an accident or injury.**
- **The actual position may be different from the indication of the help lines.**
- **Differences may occur due to the number of passengers or the loaded cargo.**
- **When the vehicle is on a slope or inclined against the road, the indication is different from the actual position.**

NOTE

When "Steering Angle Lines" is off, the dynamic guidelines will be disappear on the center information display. To turn the dynamic guidelines on and off, refer to "General settings" ☞P211 (11.6-inch display models) or "General settings" ☞P228 (dual 7.0-inch display models).

▼ Difference between screen image and actual road

The distance markers show the distance for a level road when the vehicle is not loaded. It may be different from the actual distance depending on the loading conditions or road conditions.

▽ **When there is an upward slope at the back**

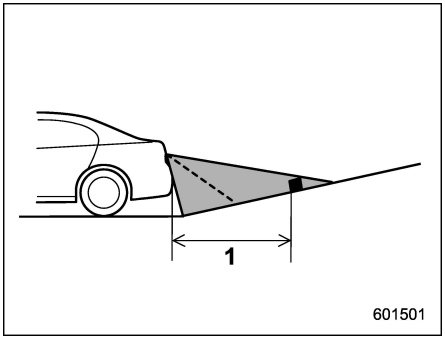

1) 3 ft (1 m)

The distance on the screen looks farther than the actual distance.

▽ **When there is a downward slope at the back**

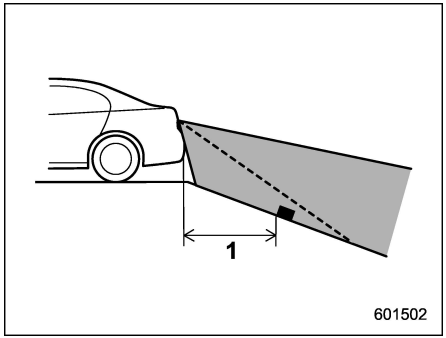

1) 3 ft (1 m)

The distance on the screen looks nearer than the actual distance.

NOTE

When cargo is loaded, the rear view distance on the screen looks farther than the actual distance as in an upward slope.

▼ **Feature of distance marker**

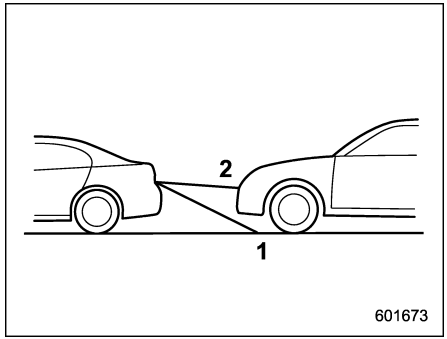

1) 3 ft (1 m) line
2) 10 ft (3 m) line

The distance marker shows the distance on the road. If there is a car or another object close behind, distance cannot be correctly displayed.

7-20. BSD/RCTA (If Equipped)

The BSD/RCTA consists of rear radar with Blind Spot Detection and Rear Cross Traffic Alert.

These functions of BSD/RCTA are the systems that detect objects and vehicles to the rear and draw attention to the driver when changing a lane or when driving in reverse.

WARNING

The driver is responsible for driving safely. Always be sure to check the surroundings with your eyes when changing lanes or reversing the vehicle.

The system is designed to assist the driver in changing lanes or reversing safely by monitoring the rear and side areas of the vehicle. However, you cannot rely on this system alone in assuring the safety during a lane change or reversing. Overconfidence in this system could result in an accident and lead to serious injury or death. Since the system operation has various limitations, the flashing or illumination of the BSD/RCTA approach indicator light may be delayed or it may not operate at all even when a vehicle is present in a neighboring lane or approaching from either side.

The driver is responsible for paying attention to the rear and side areas of the vehicle.

■ System Features

BSD/RCTA consists of the following functions.

- To detect a vehicle in a blind spot on an adjacent lane or a vehicle approaching at high speed while driving the vehicle (Blind Spot Detection)
- To detect a vehicle approaching from the right or left while reversing the vehicle (Rear Cross Traffic Alert)

The system uses radar sensors for the following features.

NOTE

The BSD/RCTA radar sensor has been certified by the radio wave related laws of the U.S. and other FCC compliant countries, Canada and Mexico. When driving in other countries, certification of the country where the vehicle is driven must be obtained. For certification in the U.S. and other FCC compliant countries, Canada and Mexico, refer to "Certification for the BSD/RCTA" ☞P380.

▼ **Blind Spot Detection (BSD)**

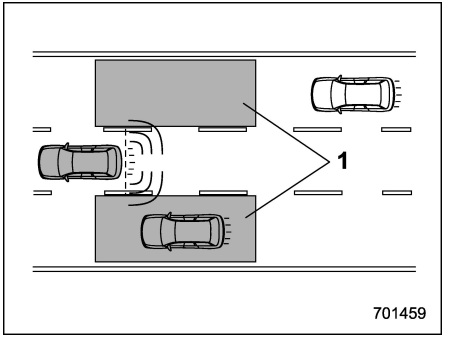

1) Operating range

The system notifies the driver of the presence of vehicles in its blind spot.

- If the system detects a vehicle in its blind spot, it warns the driver by illuminating the BSD/RCTA approach indicator light (s) on the outside mirror(s).
- If the driver operates the turn signal lever in the direction where the BSD/RCTA approach indicator light is illuminating, the system warns the driver of dangers by flashing the BSD/RCTA approach indicator light.

▽ Lane Change Assist (LCA)

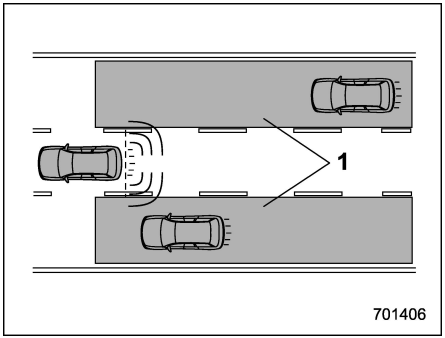

1) Operating range

The system notifies the driver of vehicles approaching at a high speed in the neighboring lanes.

- If the system detects a vehicle approaching at a high speed in the neighboring lanes, it warns the driver of dangers by illuminating the BSD/RCTA approach indicator light(s) on the outside mirror(s).
- If the driver operates the turn signal lever in the direction where the BSD/RCTA approach indicator light is illuminating, the system warns the driver of dangers by flashing the BSD/RCTA approach indicator light.

▼ Rear Cross Traffic Alert (RCTA)

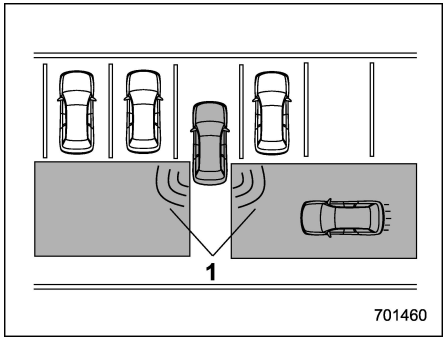

1) Operating range

The system notifies the driver of another vehicle approaching from either side when driving in reverse. This feature helps the driver check the rear and side areas of the vehicle when moving backward.

If the system detects a vehicle approaching from either side while moving backward, it warns the driver of dangers in the following way.

- The BSD/RCTA approach indicator light(s) on the outside mirror(s) flashes.
- A warning buzzer sounds.
- An icon appears on the center information display.

▽ Limitations of the detectability of RCTA

Since the detectability of RCTA is limited, the RCTA may not operate properly in angled parking.

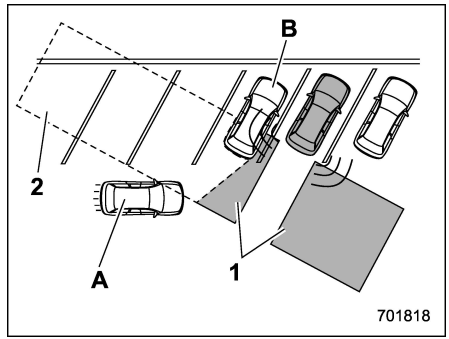

Example 1

1) The detection range of the radar sensors
2) Area out of detection range of the radar sensors

A) Vehicle that may not be detected
B) Parked vehicle

⚠ WARNING

An approaching vehicle (A) may not be detected because the detection range is limited by the parked vehicle (B). Always be sure to check the surroundings with your eyes when

– CONTINUED –

reversing the vehicle.

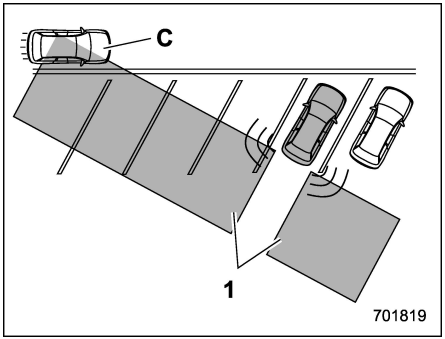

Example 2
1) The detection range of the radar sensors
C) Vehicle that may be detected

NOTE

The system may detect that a vehicle (C) is passing in front of your vehicle. Always be sure to check the surroundings with your eyes when reversing the vehicle.

■ System Operation

▼ Operating conditions

The BSD/RCTA will operate when all of the following conditions are met.

- The ignition switch is in the “ON” position.
- The BSD/RCTA warning indicator and BSD/RCTA OFF indicator are turned off.
- The vehicle is driven at speeds above 7 mph (12 km/h) (except when reversing).
- The select lever is in the “R” position (RCTA only).

The BSD/RCTA will not operate in the following situations.

- The BSD/RCTA OFF indicator appears.
- The vehicle speed is below 6 mph (10 km/h) even when the BSD/RCTA OFF indicator does not appear (except when reversing).

NOTE

- In the following cases, the BSD/RCTA will stop operating and the BSD/RCTA warning indicator will appear.
  – When a malfunction occurs in the system, including the BSD/RCTA approach indicator light
- If the BSD/RCTA warning indicator appears, exercise proper caution. For details, refer to “BSD/RCTA Warning Indicator” ☞P380.
- In the following cases, the BSD/RCTA will temporarily stop operating (or may stop operating) and the BSD/RCTA OFF indicator will appear.
  – When the radar sensor becomes significantly misaligned (If the orientation of the radar sensor is shifted for any reason, readjustment is required. Have the sensor adjusted at a SUBARU dealer.)
  – When a large amount of snow or ice sticks to the rear bumper surface around the radar sensors
  – When the vehicle is driven on a snow-covered road or in an environment in which there are no objects around (such as in a desert) for a prolonged period of time
  – When the temperature around the radar sensors increases excessively due to long driving on uphill grades in the summer, etc.
  – When the temperature around the radar sensors becomes extremely low
  – When the vehicle battery voltage lowers
  – When the vehicle voltage exceeds the battery voltage rating

The BSD/RCTA will resume operation

once these conditions are corrected, and the BSD/RCTA OFF indicator will disappear. However, if the BSD/RCTA OFF indicator appears for a prolonged period of time, have the system inspected at a SUBARU dealer as soon as possible.

- The detectability of the radar sensors is restricted. The BSD/RCTA detection may be impaired and the system may not operate properly under the following conditions.
  - When the rear bumper around the radar sensors is distorted
  - When ice, snow or mud adheres to the rear bumper surface around the radar sensors
  - When stickers, etc. are affixed on the areas of the radar sensors on the rear bumper
  - During adverse weather conditions such as rain, snow or fog
  - When driving on wet roads such as snow-covered roads and through puddles
- The radar sensors may not detect or may have difficulty detecting the following vehicles and objects.
  - Small motorcycles, bicycles, pedestrians, stationary objects on the road or road side, etc.
  - Vehicles with body shapes that the radar may not reflect (vehicles with lower body height such as a trailer with no cargo and sports cars)
  - Vehicles that are not approaching your vehicle even though they are in the detection area (either on a neighboring lane to the rear or beside your vehicle when reversing) (The system determines the presence of approaching vehicles based on data detected by the radar sensors.)
  - Vehicles traveling at significantly different speeds
  - Vehicles driving in parallel at almost the same speed as your vehicle for a prolonged time
  - Oncoming vehicles
  - Vehicles in a lane beyond the neighboring lane
  - Vehicles travelling at a significantly lower speed that you are trying to overtake
- On a road with extremely narrow lanes, the system may detect vehicles driving in a lane next to the neighboring lane.

■ BSD/RCTA Approach Indicator Light/Warning Buzzer

While the BSD/RCTA is active, the following item(s) will operate to alert the driver:

- The BSD/RCTA approach indicator light (when there are vehicles in the neighboring lanes).
- The BSD/RCTA approach indicator light and warning buzzer (when a vehicle is approaching from the left or right side while your vehicle is reversing)

▼ BSD/RCTA approach indicator light

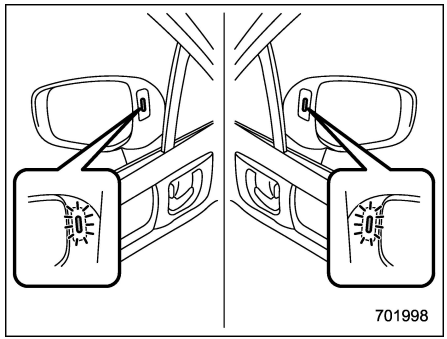

BSD/RCTA approach indicator light

It is mounted on each side of the outside mirrors.

The indicator light will illuminate when a vehicle approaching from behind is de-

– CONTINUED –

tected.

The indicator light will flash to warn the driver of dangers under the following conditions.

- While the indicator light is illuminating, if the turn signal lever is operated toward the side in which this light turned on
- When reversing the vehicle while the system detects a vehicle approaching from either side

▽ BSD/RCTA approach indicator light dimming function

When the headlights are turned on, the brightness of the BSD/RCTA approach indicator light will be reduced.

NOTE

- **You may have difficulty seeing the BSD/RCTA approach indicator light under the following conditions.**
  - **When sunlight shines directly on it**
  - **When the headlight beams from a vehicle traveling behind shines directly on it**
- **While the illumination brightness control dial is in the fully upward position, even if the headlights are turned on, the brightness of the BSD/RCTA approach indicator light will not be reduced. For details about the illumination brightness control dial, refer to "Illumination Brightness Control" ☞P173.**

▼ BSD/RCTA approach warning buzzer (only when reversing)

A warning buzzer sounds along with flashing of the BSD/RCTA approach indicator light to warn the driver of dangers.

The setting of the warning buzzer volume can be changed by operating the center information display. For details, refer to "Car settings" ☞P215 (11.6-inch display models) or "Vehicle setting icons" ☞P233 (dual 7.0-inch display models).

▼ Safety tips regarding the BSD/RCTA approach indicator light/warning buzzer

- In the following cases, operation of the BSD/RCTA approach indicator light and the warning buzzer may be delayed or the system may fail to issue these warnings.
  - When a vehicle moves to the neighboring lane from a lane next to the neighboring lane
  - When driving on a steep incline or on repeated sharp uphill and downhill grades
  - When going beyond a pass
  - When both your vehicle and a vehicle driving on a neighboring lane are driving on the far side of each lane.
  - When several narrowly-spaced vehicles are approaching in a row
  - In low radius bends (tight bends or when making turns at an intersection)
  - When there is a difference in height between your lane and the neighboring lane
  - Immediately after the BSD/RCTA is activated by touching "BSD/RCTA"
  - Immediately after the select lever is shifted to the "R" position
  - When extremely heavy cargo is loaded in the trunk or cargo area
- During reversing, operation of the BSD/RCTA approach indicator light and the warning buzzer may be delayed or the system may fail to issue these warnings under the following conditions.
  - When backing out of an angled parking space
  - When a large-sized vehicle is parked next to your vehicle (That vehicle prevents the propagation of radar waves.)
  - When reversing on sloped roads
  - When reversing at a high speed

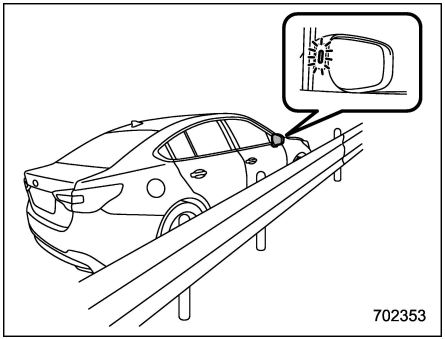

- The BSD/RCTA approach indicator light may illuminate when driving close to solid objects on the road or road side (such as guardrails, tunnels and sidewalls).
- When turning at an intersection in urban areas, or a multilane intersection, the BSD/RCTA approach indicator light may flash.
- If a building or a wall exists in the reversing direction, the BSD/RCTA approach indicator light may flash and the warning buzzer may sound.
- In the following cases, the system may detect a vehicle driving two lanes away from your vehicle.
  - When your vehicle drives on the near side of its lane from the corresponding vehicle
  - When the vehicle driving two lanes away drives on the near side of its lane from your vehicle

■ BSD/RCTA OFF Indicator

▼ System temporary stops

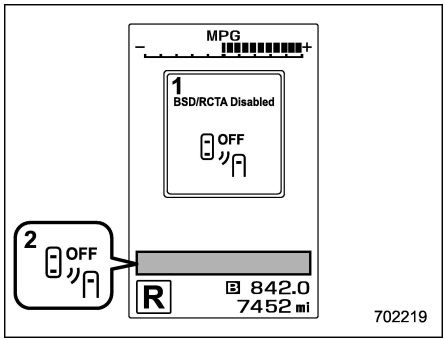

1) BSD/RCTA temporary stop message
2) BSD/RCTA OFF indicator

This display appears when the system is used at extremely high or low temperatures or when abnormal voltage exists. Once these conditions are corrected, the system will recover from the temporary stop condition and the indicator will disappear.

If the indicator remains displayed for a prolonged time, have the system inspected at a SUBARU dealer.

▼ System temporary stops due to reduced radar sensitivity

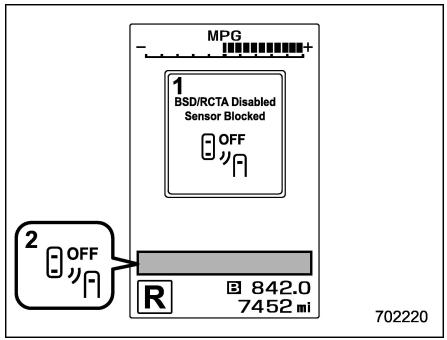

1) BSD/RCTA temporary stop message due to reduced radar sensitivity
2) BSD/RCTA OFF indicator

This display appears when the detectability of the radar sensors is reduced. Once the condition is corrected, the system will recover from the temporary stop condition and the indicator will disappear.

If the indicator remains displayed for a prolonged time, have the system inspected at a SUBARU dealer.

– CONTINUED –

■ BSD/RCTA Warning Indicator

▼ System malfunction

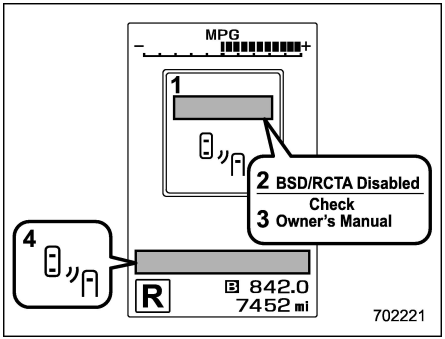

1) BSD/RCTA malfunction message
2) At first, this message will appear
3) Then this message will appear
4) BSD/RCTA warning indicator

This display appears when a malfunction occurs in the system. Contact a SUBARU dealer and have the system inspected.

■ To Turn On/Off the BSD/RCTA

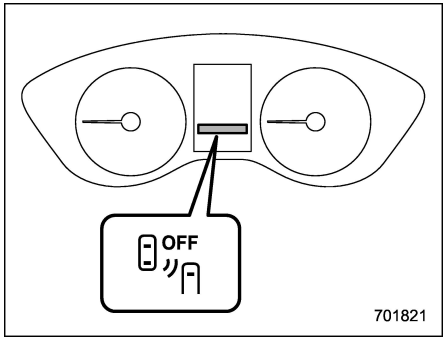

BSD/RCTA OFF indicator

To turn the BSD/RCTA system on and off, operate the center information display. Refer to “Car settings” ☞P215 (11.6-inch display models) or “Vehicle setting icons” ☞P233 (dual 7.0-inch display models).

When the BSD/RCTA system is turned OFF, the BSD/RCTA OFF indicator on the combination meter display (color LCD) will illuminate.

NOTE

- **In the following cases, turn off the BSD/RCTA system. The system may not operate properly due to blocked radar waves.**
  - **When towing a trailer (Outback)**
  - **When a bicycle carrier or other item is fitted to the rear of the vehicle**
  - **When using a chassis dynamometer or free roller device, etc.**
  - **When running the engine and making the wheels rotate while lifting up the vehicle**
- **If the ignition switch is turned to the “LOCK”/“OFF” position, the last known status of the system is maintained. For example, if the ignition switch is turned to the “LOCK”/“OFF” position with the BSD/RCTA deactivated, the BSD/RCTA remains deactivated the next time the ignition switch is turned to the “ON” position.**

■ Certification for the BSD/RCTA

- **The U.S. and other FCC compliant countries**

FCC ID: OAYSRR3A

⚠ CAUTION

FCC WARNING

Changes or modifications not expressly approved by the party responsible for compliance could void the user’s authority to operate the equipment.

This device complies with part 15 of the FCC Rules. Operation is subject to the following two conditions: (1) This device may not cause harmful interference, and (2) this device must accept any interference received, including interference that may cause undesired operation.

- **Canada-spec. models**

NOTE

Applicable law: Canada 310

This device complies with Industry Canada's licence-exempt RSSs. Operation is subject to the following two conditions: (1) This device may not cause interference; and (2) This device must accept any interference, including interference that may cause undesired operation of the device.

Frequency bands: 24.05 - 24.25 GHz

Output power: less than 20 milliwatts

702021

REMARQUE

Droit applicable: Canada 310

Le présent appareil est conforme aux CNR d'Industrie Canada applicables aux appareils radio exempts de licence. L'exploitation est autorisée aux deux conditions suivantes: (1) l'appareil ne doit pas produire de brouillage; (2) l'utilisateur de l'appareil doit accepter tout brouillage radioélectrique subi, même si le brouillage est susceptible d'en compromettre le fonctionnement.

Bandes de fréquences:
24.05 - 24.25 GHz

Puissance émise:
Moins de 20 milliwatts

702022

– CONTINUED –

- **Mexico-spec. models**

Certificado de homologacion:
RLVCOSR15-0442

Continental SRR3-A

Este equipo opera a titulo secundario, consecuentemente, debe aceptar interferencias perjudiciales incluyendo equipos de la misma clase y puede no causar interferencias a sistemas operando a titulo primario.

702185

■ Handling of Radar Sensors

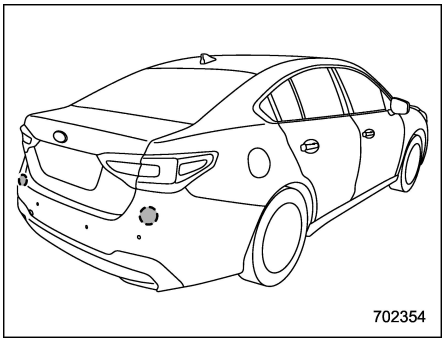

Radar sensors (Legacy)

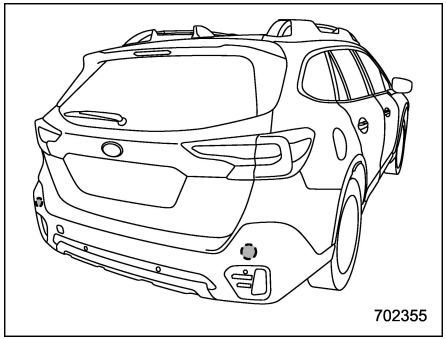

Radar sensors (Outback)

The radar sensors, one on each side of the vehicle, are mounted inside the rear bumper.

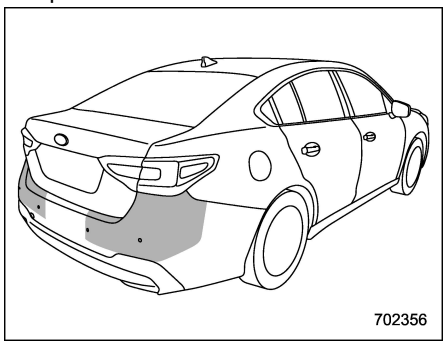

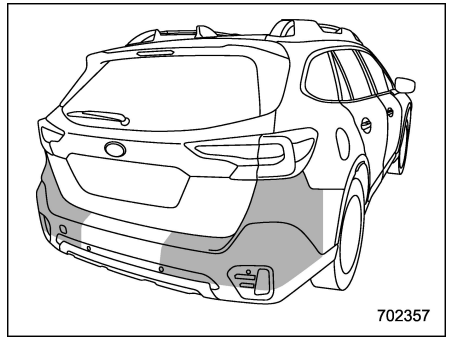

⚠ CAUTION

To ensure correct operation of the BSD/RCTA, observe the following precautions.

- **Always keep the bumper surface near the radar sensors clean.**
- **Do not affix any stickers or other items on the bumper surface near the radar sensors. For details, consult your SUBARU dealer.**
- **Do not modify the bumper near the radar sensors.**
- **Do not paint the bumper near the radar sensors.**
- **Do not expose the bumper near the radar sensors to strong im-**

pacts. If a sensor becomes misaligned, a system malfunction may occur, including the inability to detect vehicles entering the detection areas. If any strong shock is applied to the bumper, be sure to contact your SUBARU dealer for inspection.

- Do not disassemble the radar sensors.

NOTE

If the radar sensors require repair or replacement, or the bumper area around the radar sensors requires repair, paintwork or replacement, contact your SUBARU dealer for assistance.

7-21. Reverse Automatic Braking System (If Equipped)

Reverse Automatic Braking is a system designed to help avoid collisions or reduce collision damage when reversing the vehicle. If a wall or an obstacle is detected in the reversing direction, the system will notify the driver with a warning sound and may activate the vehicle's brakes automatically.

WARNING

- Reverse Automatic Braking is not a system intended to replace the driver's responsibility to check their surroundings for vehicles or obstacles to avoid a collision.
- The driver is responsible for driving safely. Always be sure to check the surroundings visually be ready to brake when reversing the vehicle.
- There are some cases in which the vehicle cannot avoid collision, because the system operation has limitations. The warning sound or automatic braking may be delayed or may not operate at all even when an obstacle is present.
- Make sure to set the Automatic Braking System to OFF when the vehicle is on the free roller or on the chassis dynamometer. Otherwise, the vehicle may move and it may cause an accident.
- Make sure to set the Automatic Braking System to OFF when towing a trailer. Otherwise, the vehicle may move and it may cause an accident.
- The system is not designed to detect people (including children), animals or other moving objects.
- Depending on the vehicle condition or the surrounding environment, the sonar sensor's ability to detect objects may become unstable.

NOTE

The Reverse Automatic Braking System records and stores the following data when automatic braking operates. It does not record conversations, personal information or other audio data.

- Distance from the object
- Vehicle speed
- Accelerator pedal operation status
- Brake pedal operation status

– CONTINUED –

- **Select lever position**
- **Outside temperature**
- **The sensitivity setting of the sonar sensors**

SUBARU and third parties contracted by SUBARU may acquire and use the recorded data for the purpose of vehicle research and development. SUBARU and third parties contracted by SUBARU will not disclose or provide the acquired data to any other third party except under the following conditions.

- **The vehicle owner has given his/her consent.**
- **The disclosure/provision is based on a court order or other legally enforceable request.**
- **Data that has been modified so that the user and vehicle cannot be identified is provided to a research institution for statistical processing or similar purposes.**

■ Reverse Automatic Braking System Overview

The Reverse Automatic Braking System will operate the following 2 functions using 4 sonar sensors.

- **Object detection warning function**

The Reverse Automatic Braking System detects objects rearward and warns the driver by warning message on the center information display and warning beeps.

- **Reverse Automatic Braking function**

The Reverse Automatic Braking function detects objects rearward and if there is a high risk of a collision, the system decelerates the vehicle and controls the braking to reduce damage.

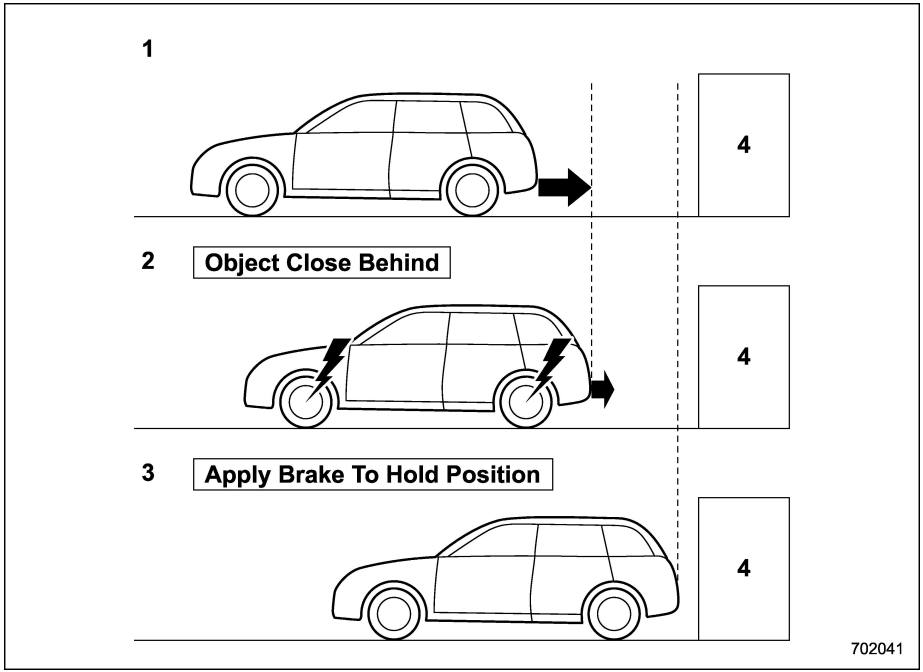

1) When reversing
2) When either strong automatic braking or torque control is applied to prevent collision (in this case, short warning beeps or continuous warning beeps will sound)
3) When the vehicle is stopped by the system (in this case, the continuous beep will remain sounding)
4) Object (e.g., a wall)

WARNING

If your vehicle is trapped on a railroad crossing and you are trying to escape by reversing through the crossing gate, the system may recognize the crossing gate as an obstacle and brake may activate. In this case, remain calm and either continue to depress the accelerator pedal or cancel the system. To cancel the system, refer to "Canceling the Reverse Automatic Braking System Operation" ☞P392.

■ Operating Conditions

The Reverse Automatic Braking system will operate when all of the following conditions are met.

– CONTINUED –

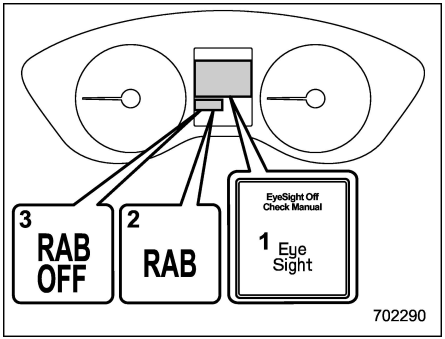

1) EyeSight warning indicator
2) RAB warning indicator
3) RAB OFF indicator

- The ignition switch is in the “ON” position.
- The EyeSight warning indicator is off.
- The RAB warning indicator is off.
- Reverse Automatic Braking system OFF indicator is off.
- The select lever is in the “R” position.

Object detection warning function

- The object detection warning function is set to “ON”.
- The vehicle speed is from 0 to 9 mph (0 to 15 km/h).

Reverse Automatic Braking function

- The Reverse Automatic Braking function is set to “ON”.
- The vehicle speed is from 1 to 9 mph (1.5 to 15 km/h).

NOTE

- **In the following cases, the Reverse Automatic braking system will not operate. Promptly contact a SUBARU dealer to have the system inspected.**
  - **– The EyeSight warning indicator is illuminated.**
  - **– The RAB warning indicator is illuminated.**
- **In the following cases, the Reverse Automatic braking system cannot be operated.**
  - **– The (EyeSight Temporary Stop indicator: White) is illuminated, and the messages corresponding to the EyeSight temporary stop are displayed on the combination meter display (color LCD). For details, refer to the Owner’s Manual supplement for the EyeSight system.**
  - **– The Reverse Automatic Braking system OFF indicator is illuminated.**
- **In the following cases, the functions may not be able to properly work. Promptly contact a SUBARU dealer to have the system inspected.**
  - **– A sticker, paint, or a chemical is applied to the sonar sensors or the rear bumper near the sonar sensor.**
  - **– The rear bumper is modified.**
  - **– The rear bumper has been removed and attached.**
  - **– The ground clearance is changed due to the vehicle’s loading condition or modification.**
  - **– There is damage to the sonar sensors or the rear bumper near the sonar sensor.**
  - **– The rear bumper is exposed to strong impact, or the rear bumper is deformed.**
- **On a steep hill, the system’s automatic braking ability will be reduced.**
- **The system is designed to avoid collisions by automatic hard braking when the vehicle’s reversing speed is less than approximately 3 mph (5 km/h). However, the system does not guarantee that the vehicle will be able to avoid collisions in any situation.**
- **If the vehicle is reversed at an extremely slow speed, the driver’s operation may be prioritized. In this case, automatic braking will not operate.**
- **The system may not be able to detect and apply the brake with the following objects.**
  - **– Sharp or thin objects such as poles, fences and ropes which may**

not reflect the sound wave emitted from the sonar sensor.

– Objects that are too close to the rear bumper when the select lever is set to the “R” position.

– Objects with a surface which may not reflect the sound wave emitted from the sonar sensor such as a chain link fence.

- Objects the system is not designed to detect and apply brake.

– Pedestrians.

– Moving objects including moving vehicles.

– Objects which absorbs sound waves such as cloth or snow.

– Objects whose surface has a diagonal angle.

– Objects that are low to the ground such as parking blocks.

– Objects that are high above the ground such as objects hanging from above.

– Objects that are out of range of the center of the vehicle in the horizontal direction.

– Objects that are not in a vertical direction.

- When reversing the vehicle, the functions may not be able to work properly or may cause a system malfunction if the following conditions exist.

High frequency sound from other sources are nearby:

– Horn sound from another vehicle.

– Engine sound from other vehicles.

– Sound of an air brake.

– Vehicle detection equipment or a sonar from another vehicle.

– A sound wave with a frequency similar to the vehicle’s system is transmitted near by.

– A vehicle equipped with the same system is reversing toward your reversing direction.

Weather conditions:

– Extremely high or extremely low temperatures in which the area near the sonar sensor becomes too hot or too cold to operate.

– The sonar sensors or the rear bumper near the sonar sensors are exposed to heavy rain or a significant amount of water.

– Fog, snow or sandstorm, etc.

– Air is moving rapidly such as when a strong wind is blowing.

Parts attached to the rear bumper near the sonar sensor:

– Commercial electronic parts (fog light, fender pole, radio antenna) or commercial attachment parts (trailer hitch, bicycle carrier, bumper guard) are attached.

– Parts that emit high frequency sound, such as a horn or speaker, are attached.

Vehicle conditions:

– Ice, snow or mud is adhered to the sonar sensors or the rear bumper near the sonar sensor.

– The vehicle is significantly inclined.

– The ground clearance is significantly reduced due to the vehicle’s loading condition, etc.

– When the sonar sensor is misaligned due to a collision or an accident.

Surrounding environment:

– A cloth banner, flag, hanging branch or railroad crossing bars are present in the reversing direction.

– When reversing on a gravel or grassy area.

– When reversing in an area where objects or walls are adjacent to the vehicle such as narrow tunnels,

– CONTINUED –

narrow bridges, narrow roads or narrow garages.

– Wheel track or hole is present in the ground of the reversing direction.

– When reversing over a drainage cover (grating cover).

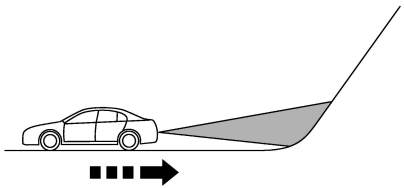

702035

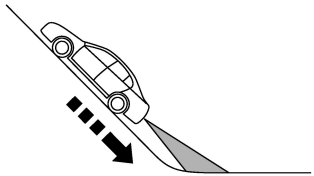

702036

– The path of the reversing direction is inclined such as on a steep uphill.

– When reversing downhill.

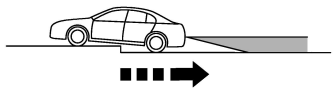

702037

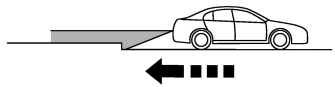

702388

– A curb or step is present in the reversing direction.

– Reversing in a garage with a low ceiling or a tunnel.

– There is a patch of snow rearward.

– There is a puddle of water.

– There is an obstacle that is next to an object.

– Going back along a wall.

– The area where the road starts touching dirt and snow

– When reversing on an uneven road.

● In circumstances such as the following, it may not be possible to avoid a collision even when the system operates normally.

– Roads are slippery.
– The tire air pressure is not correct.
– The tires have become worn.
– Tire chains are installed.
– Tires which are not the designated size are installed.
– Emergency repairs were performed using a puncture repair kit.
– The suspension was modified.
– Vehicle driving is unstable due to accident or malfunction.
– The brake warning light is illuminated.

■ Object Detection Warning Function

When Reverse Automatic Braking System is in operation, an audible warning beeps will sound in 3 levels to warn the driver of a potential collision.

NOTE

It may take time to display the wall and sound warning beeps after the object was recognized by the object detection warning function.

Guideline of detecting range

Alert level	Range of detected object*	Distance indicator	Alarm pattern
Long proximity (object detected)	28 in (70 cm) or more	Green	No warning sound
Medium proximity alert (approaching the object)	20 to 28 in (50 to 70 cm)	Yellow	Short beeps
Short proximity alert (approaching closer to the object)	12 to 20 in (30 to 50 cm)	Orange	Rapid short beeps
Closest proximity alert (too close to the object)	12 in (30 cm) or less	Red	Continuous beep

*: Range of detection may vary depending on the environmental condition.

– CONTINUED –

▼ Obstacle detected and alert level

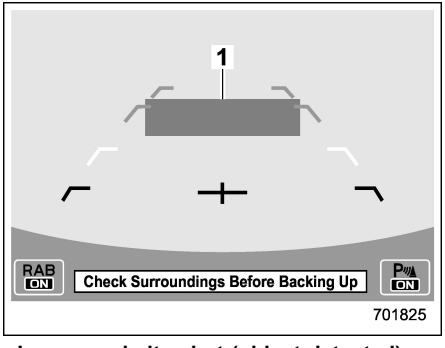

Long proximity alert (object detected)
1) Green: 28 in (70 cm) or more

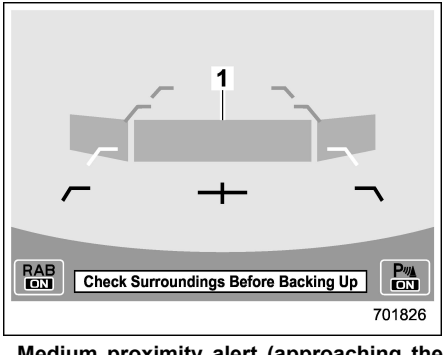

Medium proximity alert (approaching the object)
1) Yellow: 20 to 28 in (50 to 70 cm)

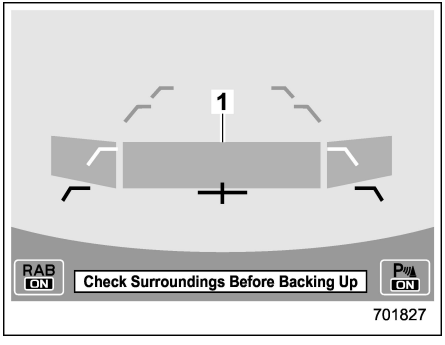

Short proximity alert (approaching the object closer)
1) Orange: 12 to 20 in (30 to 50 cm)

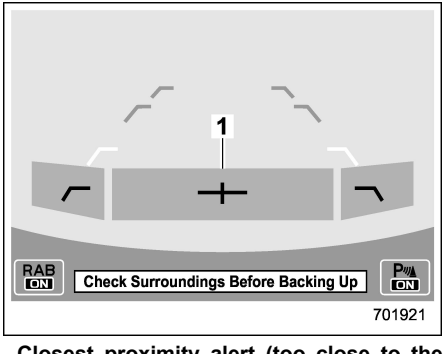

Closest proximity alert (too close to the object)
1) Red: 12 in (30 cm) or less

When an object is detected in the reversing direction, the range of detected object will be shown on the center information display.

A warning alarm will sound and, depending on the speed, either torque control to generate engine braking or automatic braking will be applied.

■ Reverse Automatic Braking Function Operation

▼ Object close behind warning

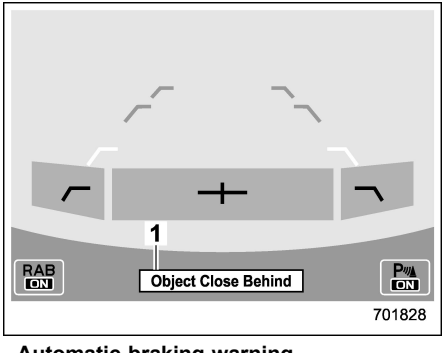

Automatic braking warning
1) Warning message

If the system determine the risk of collision with the object. Short warning beeps or continuous warning beeps will sound and either strong automatic braking or torque

control will be applied to prevent collision.

At this time, a warning message is also displayed on the combination meter display (color LCD).

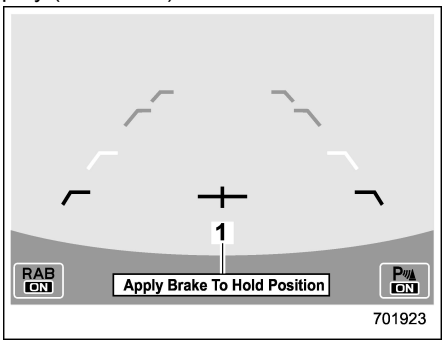

Depress brake pedal warning

1) Warning message

Make sure to depress the brake pedal once the vehicle has been stopped by automatic braking. Until the brake pedal is depressed, a message will be displayed on the center information display and the continuous beep will remain sounding.

At this time, a warning message is also displayed on the combination meter display (color LCD).

NOTE

The object detection warning function and Reverse Automatic Braking function are different in operation conditions. Therefore there are cases in which only one of these functions will activate.

WARNING

Depress the brake pedal immediately after the system stops the vehicle by automatic braking. Depending on the conditions of the road surface and tires, the vehicle may not remain stopped, possibly leading to an accident.

▼ **After the vehicle is stopped by the system**

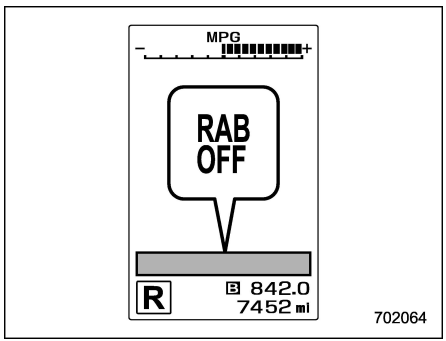

After the brake pedal is depressed, the Reverse Automatic Braking system OFF indicator will illuminate and the system will temporarily stop operating. The Reverse Automatic Braking system OFF indicator will turn off when the select lever is shifted to a position other than the “R” position.

The system will operate again the next time the select lever is shifted to the “R” position.

In circumstances such as the following, the Reverse Automatic Braking system automatically stops operating and the Reverse Automatic Braking system OFF indicator illuminates.

– There is ice, snow, mud, or other substance on the sonar sensors.

– The select lever was shifted to “R” when there was an obstacle located close to the rear bumper.

– A sound with a frequency close to that of the sonar used by the Reverse Automatic Braking system was detected.

NOTE

- **In the following cases, after the vehicle has been stopped by the Reverse Automatic Braking system, brake control is released and the electronic parking brake operates. For details about releasing the parking brake, refer to “Electronic Parking Brake” ☞P355.**
  - **– When 2 minutes pass after the vehicle is stopped**

– CONTINUED –

– When any door is opened

- **The Reverse Automatic Braking system may stop operating temporarily in the following cases and the Reverse Automatic Braking system OFF indicator will illuminate.**

– Ice, snow or mud is adhered to the sonar sensors or the rear bumper near the sonar sensor

– Objects are too close to the rear bumper when the select lever is set to the "R" position

– The system detects sounds of a similar frequency to the RAB sonar

■ Canceling the Reverse Automatic Braking System Operation

The Reverse Automatic Braking system can be temporarily canceled by any of the following operation.

- While the vehicle is stopped by the operation of automatic braking, the brake pedal is depressed.
- While the vehicle is stopped by the operation of automatic braking, the accelerator pedal is depressed.
- The accelerator pedal is depressed continuously (In this case, limited acceleration will be canceled and the vehicle will continue reversing.)
- The select lever is shifted to a position other than the "R" position.

NOTE

The system will be canceled if the object is no longer detected.

■ Reverse Automatic Braking System ON/OFF Setting

While the select lever is shifted to the "R" position, the below functions of the Reverse Automatic Braking system can be set by operating the center information display.

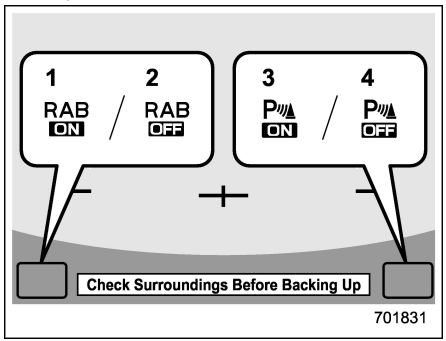

1) ON setting key of Reverse Automatic Braking function
2) OFF setting key of Reverse Automatic Braking function
3) ON setting key of the object detection warning function
4) OFF setting key of the object detection warning function

When the ON setting key is shown, the corresponding setting is ON.

Touch and hold the ON setting key to turn the setting OFF.

When the OFF setting is shown, the corresponding setting is OFF.

Touch and hold the OFF setting key to turn the setting ON.

When the Reverse Automatic Braking function are turned OFF, the following indicator(s) will illuminate.

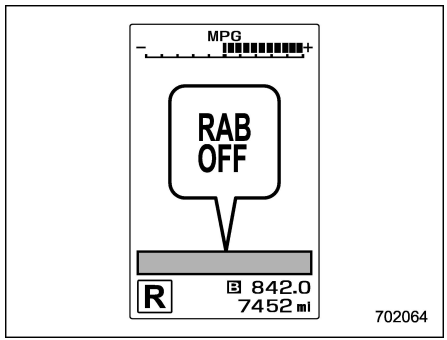

The RAB OFF indicator will turn off when the corresponding function is turned ON.

NOTE

When the settings cannot be changed, the ON/OFF setting key will be grayed out.

Also, the following settings can be changed by operating the center information display.

- Warning volume
- Sonar audible alarm

For details, refer to “Car settings” ☞P215.

■ RAB Warning Indicator

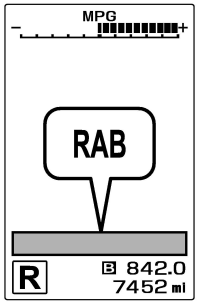

702065

If the Reverse Automatic Braking System malfunctions, the above indicator illuminates on the combination meter. Contact the nearest SUBARU dealer for details.

■ Handling of the Sonar Sensors

The 4 sonar sensors are located in the rear bumper. To ensure the proper operation of the Reverse Automatic Braking system, observe the following precautions.

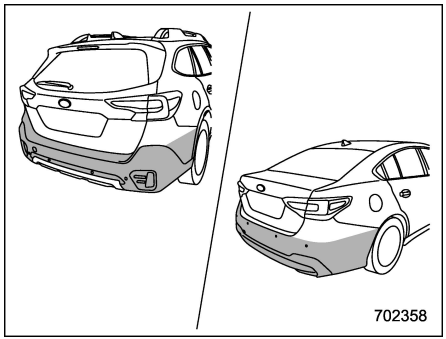
702358

- Do not affix any stickers or other items on the sonar sensor or the bumper surface near the sonar sensors.
- Always keep the sonar sensor and the rear bumper surface near the sonar sensors clean.
- Do not modify rear bumper.
- Do not paint the bumper near the sonar sensors.
- Do not apply high pressure water to the sonar sensors with a high pressure car-washing machine.
- Do not apply strong impacts to the rear bumper near the sonar sensors. If a sensor becomes misaligned, a system malfunction may occur, including inability to detect objects in the reversing direction. If any strong impact is applied to the rear bumper, contact a SUBARU dealer to have the system inspected.
- Do not disassemble the sonar sensors.

NOTE

If the sonar sensors require repair or replacement, or if the area of the rear bumper near the sonar sensors requires repair, paintwork or replacement, contact your SUBARU dealer for assistance.

7-22. Driver Monitoring System (If Equipped)

Driver Monitoring System is introduced as DriverFocus in some countries.

The Driver Monitoring System monitors possible cases when the driver is not paying attention to the forward direction, and also recognizes individual users.

This system warns the driver of inattentive/drowsy driving, and can support safe and comfortable driving by automatically retrieving the following settings.

– Driver's position
– Climate control setting
– Meter setting
– Center information display setting

When a user is registered, various settings are automatically retrieved when the user enters the vehicle.

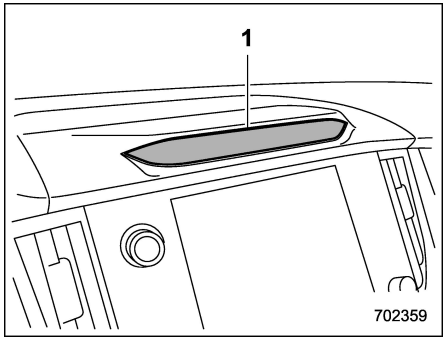

1) Camera

CAUTION

- **Always use the utmost care in driving**
  - **Overconfidence because you are driving a vehicle with the Driver Monitoring System could easily lead to a serious accident.**
- **This system cannot detect if the driver is feeling drowsy or is concentrating on safe driving.**
- **It cannot judge if the driver is awake or asleep, if their driving abilities have diminished, or if they are concentrating on safe driving.**
- **In some circumstances, the system may not be able to correctly detect the driver state.**

NOTE

- **The user recognition camera does not save images, audio, or video.**
- **The Driver Monitoring System may not operate correctly when sunlight is shining into the vehicle in the following ways.**
  - **Sunlight is shining directly (or through glass) onto the user recognition camera.**
  - **There are shadows on the driver's face caused by sunlight (or any light with a strong infrared component).**
  - **There are large momentary fluctuations in the strength of the sunlight (or any light with a strong infrared component) shining on the face.**
- **Correct detection may not be possible when a device that includes an infrared light source (such as a commercially available Driver Monitoring System) is installed in the vehicle interior.**
- **The Driver Monitoring System may**

not operate correctly at the following times when the driver is wearing glasses or sunglasses.

– The sunglasses do not allow the easy passage of infrared light.

– The surrounding scenery is reflected strongly in the lenses of the glasses or sunglasses.

– The eyes are hidden by the frame of the glasses and the user recognition camera cannot detect the eyes.

– The light from an infrared light source (LED) is reflected in the lenses of the glasses or sunglasses.

– The driver is wearing an eyepatch.

– The driver is wearing a hat set deeply over the eyes.

- Depending on the type of mask, correct detection of inattentive/drowsy driving may not be possible.
- Correct user recognition is not possible if the eyes, nose, or mouth is covered with a mask, muffler, sunglasses, or other item.
- The Driver Monitoring System may not operate correctly when the eyebrows, eyes, nose, or mouth is hidden due to item that is between the face and the system.
- If a thick cover is attached to the steering wheel, then depending on the position set for the tilt/telescopic steering wheel, the cover may block the system's view of the face, and the system and the Driver Monitoring System may not operate correctly.
- Do not attach any stickers to the user recognition camera or the infrared light source (LED). If the user recognition camera or infrared light source (LED) is covered by an obstruction, it will not be possible to correctly monitor the driver.
- If an accessory is hung from the inside mirror, correct detection may not be possible.
- Do not touch the user recognition camera or the infrared light source (LED) directly with your fingers. If there is dirt or a fingerprint on these parts, it will not be possible to correctly monitor the driver. If there is dirt or a fingerprint on these parts, either wipe them with a soft dry cloth, or wipe gently with a damp cloth after first firmly wringing the water out.
- If the surface of the user recognition camera or the infrared light source (LED) becomes scratched, correct detection may not be possible. Be careful that hard objects do not contact these parts.
- If there is condensation on the user recognition camera or the infrared light source (LED), correct detection may not be possible. If there is condensation on these parts, wipe it away with a soft dry cloth.
- When registering a user for user recognition, avoid closing your eyes as much as possible.
- If the user recognition success rate is low, it is possible that the user is not correctly registered. Delete the registered data and perform registration again.
- If a user frequently drives both with glasses and contact lenses, it is recommended that registration be performed both when wearing glasses and when wearing contact lenses.
- User recognition starts immediately after entering the vehicle, however if the user looks downward or at the driver side mirror for a long time, the user may not be recognized.
- When one person among twins or another pair of persons with similar facial features is registered, the other person may be incorrectly recognized as the registered user when entering the vehicle.
- If the person in the passenger's seat leans into the driver's seat, or in other cases when there are two or more faces near the driver's seat, the system may not operate correctly.

– CONTINUED –

- There are cases when the system concludes that the user's eyes are closed when the user is looking downward during driving, such as when checking instruments or the navigation screen. In such cases, the drowsy driving warning buzzer may sound or the system may otherwise not operate correctly.
- If the eyes are narrowed when laughing or when there is a dazzling outside light, the system may judge that the eyes are closed and the drowsy driving warning buzzer may sound or the system may otherwise not operate correctly.
- The drowsy driving or asleep warning states are recognized from the length of time and percentage of time that the eyes are closed. The drowsy driving warning buzzer will not sound simply when the driver feels sleepy or yawns.
- Even when the driver does not feel sleepy, if his or her eyes are closed or if he or she blinks frequently, the drowsy driving warning buzzer may sound.
- The inattentive driving warning buzzer may sound if the driver leans forward or puts his or her head out of the window while driving.
- The inattentive driving warning buzzer will not sound when the vehicle is stopped or travelling at slow speed even if the driver is not looking ahead.
- The Driver Monitoring System collects and stores data regarding drivers' facial features. Facial recognition data is stored locally and does not leave the vehicle. It is not transmitted to or stored by SUBARU or anyone else. The Driver Monitoring System may be disabled and any stored driver data may be deleted by following the instructions below. If the Driver Monitoring System is disabled, it will be unable to provide any of its safety or convenience functions.

The functions which are available vary depending on the Driver Monitoring System setting and the user recognition function setting.

Available functions

			Driver Monitoring System*1	
			ON	OFF
User recognition function*2	ON	Inattentive/drowsy driving warning	Available	Not available
		User recognition function	Available	Not available
	OFF	Inattentive/drowsy driving warning	Available	Not available
		User recognition function	Not available	Not available

– CONTINUED –

Available function items

			Driver Monitoring System*1	
			ON	OFF
User recognition function*2	ON	Register User	Available	Not available
		Delete User	Available	Not available
		Delete All Users	Available	Not available
		Update Seat and Mirror Position	Available	Not available
		Delete Driver Position	Available	Not available
	OFF	Register User	Not available	Not available
		Delete User	Available	Not available
		Delete All Users	Available	Not available
		Update Seat and Mirror Position	Not available	Not available
		Delete Driver Position	Not available	Not available

*1: The system can be turned ON/OFF with the center information display. Refer to “Car settings” ☞P215.
*2: The function can be turned ON/OFF in the center information display customization settings. Refer to “Car settings” ☞P215.

The functions which are available vary depending on whether or not the user is registered.

Available functions

	The user is registered.	The user is not registered.
User recognition function	Available	Not available

■ User Recognition Function

⚠ WARNING

Perform registration, retrieving, or delete of the seat position and outside mirror angle before beginning driving. There is the risk of an accident if registration, retrieving, or delete is performed while driving.

When a user is registered, it is possible to retrieve the following settings.

▼ Driver position personalization

- Seat position and outside mirror angle

Retrieves the registered seat position and outside mirror angle.

- Reverse tilt angle

Retrieves the registered reverse tilt-down outside mirror angle.

▼ Meter personalization

- Combination meter display (color LCD) basic screen

Displays the screen which the user had selected at the time when he/she last exited the vehicle.

▼ Center information display personalization

- Center information display basic screen

Displays the screen which the user had selected at the time when he/she last exited the vehicle.

- Fuel consumption screen

Displays the average fuel economy for past driving by that user.

- Customization linked with the user recognition function

Item		
1st menu	2nd menu	3rd menu
General	Birthday List	—
	Anniversary List	—
	Display	Display Off
	Favorite Widgets	—
	Reminder Screen	Birthday
		Anniversary
Car	Warning Volume	—

▼ Air conditioner personalization

- Air conditioner settings

Retrieves the air conditioner temperature, outlet mode, and other settings which the user had selected at the time when he/she last exited the vehicle.

NOTE

When a recognized user exits the vehicle with the air conditioner set to maximum cool or maximum heat, then the setting which preceded maximum cool or maximum heat is stored.

▼ Driver Monitoring System ON/OFF status

Retrieves the Driver Monitoring System ON/OFF status which the user had selected at the time when he/she last exited the vehicle.

– CONTINUED –

▼ **Changing the personalization settings**

Item		
Driver's position personalization	Seat position/outside mirror angle	Change the setting by using the center information display customization function. Refer to "Car settings" ☞P215.
	Reverse tilt-down outside mirror angle	
Meter personalization*	Combination meter display (color LCD) basic screen	When the customization screen linked with the synchronized user function is selected and the setting is changed, it is automatically stored.
Center information display personalization*	Center information display basic	
	Customization linked with synchronized user function	
Driver Monitoring System ON/OFF status		

*: When the Driver Monitoring System is OFF, the Driver Monitoring System continues to store the conditions from immediately before the Driver Monitoring System was turned OFF even if the screen was selected and the setting was changed.

■ Inattentive/Drowsy Driving Warning

While driving, the Driver Monitoring System monitors possible cases of driver inattention or drowsiness and warns the driver.

When the inattentive/drowsy driving warning activates, the buzzer sounds and an interrupt display appears.

NOTE

- **The inattentive/drowsy driving warning operates regardless of the status of the user recognition function.**
- **The inattentive driving warning does not activate when the turn signal is operating or when the select lever is in the "R" position.**
- **When the pre-collision brake system OFF indicator is illuminated on the combination meter display (color LCD), the inattentive driving warning activates at the same timing as usual even when a vehicle ahead or obstacle is detected. For details about the EyeSight system, refer to the Owner's Manual supplement for the EyeSight system.**

▼ Inattentive driving warning

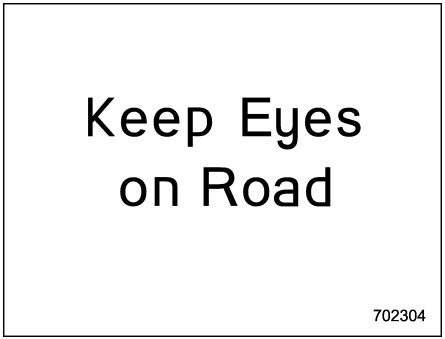

When the system monitors that the driver may be inattentive, it warns the driver.

When the inattentive driving warning activates, the buzzer sounds and an interrupt display appears on the combination meter display (color LCD).

When the EyeSight system has detected a vehicle ahead or obstacle in the forward direction, the inattentive driving warning may activate at earlier timing than usual.

Refer to the Owner's Manual supplement for the EyeSight system.

▼ Drowsy driving warning

Possible drowsiness is detected from the amount of driver eyelid closure, and a warning is given to the driver. When the drowsy driving warning activates, the buzzer sounds and an interrupt display appears.

	Combination meter display (color LCD)	Center information display	Warning chime
Drowsy driving	Stay Alert!	Stay Alert!	Beep, beep... (Continues until the driver's eyes open.)
Very drowsy			Beep, beep, beep, beep, beep (5 times)
Slightly drowsy	Take a Break!	—	Beep
Not drowsy	—	—	—

– CONTINUED –

■ Driver Monitoring System Indicator/Warning

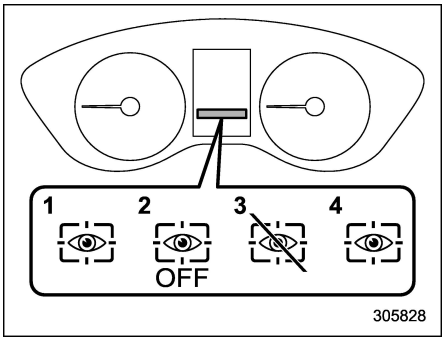

1) Driver Monitoring System operation indicator light (green)
2) Driver Monitoring System OFF indicator light
3) Driver Monitoring System temporary stop indicator light
4) Driver Monitoring System warning light (yellow)

The Driver Monitoring System indicator/warning indicates the status of the Driver Monitoring System on the combination meter display (color LCD).

NOTE

When the Driver Monitoring System OFF indicator, Driver Monitoring System temporary stop indicator, or Driver Monitoring System warning is illuminated, the Driver Monitoring System function cannot be used. In addition, the following items cannot be selected.

- **Register User**
- **Delete User**
- **Delete All Users**
- **Update Seat and Mirror Position**
- **Delete Driver Position**
- **Automatically retract seat on entry**

▼ Driver Monitoring System operation indicator light (green)

This indicator illuminates when the Driver Monitoring System is operating.

▼ Driver Monitoring System OFF indicator light

This indicator illuminates when the user has turned off the Driver Monitoring System and the Driver Monitoring System is not operating.

▼ Driver Monitoring System temporary stop indicator light

This indicator illuminates when the Driver Monitoring System is temporarily stopped.

NOTE

The Driver Monitoring System stops temporarily in the following circumstances.

- **When the temperature of the main unit of the Driver Monitoring System is high or low.**
- **When the Driver Monitoring System cannot monitor the driver's eye movement.**
- **When the Driver Monitoring System cannot monitor the driver's eyebrows, eyes, nose or mouth.**
- **When the camera and the infrared light source (LED) are covered and the Driver Monitoring System cannot monitor the driver correctly.**

▼ Driver Monitoring System warning light (yellow)

This warning illuminates when there is a problem with the Driver Monitoring System. Contact a SUBARU dealer to have the system inspected.

■ Using the Driver Monitoring System

▼ User recognition

When a user is registered with the user recognition function, the Driver Monitoring System performs the following.

702400

1. When the door is opened and the push-button ignition switch is OFF, the user recognition screen appears and the Driver Monitoring system starts user recognition.

The user recognition screen may not appear when the door is opened in some cases, such as when only a short time has passed after the push-button ignition switch was turned OFF. In such cases, user recognition starts when the door is closed however the user recognition screen does not appear.

702401

2. Sit in the driver's seat and face forward for a few moments.

3. When user recognition is completed, the Hello screen appears on the center information display.

At this time, the seat position, outside mirror angle, air conditioner settings, combination meter display (color LCD) basic screen, center information display basic screen, and customization settings all change based on the user information.

NOTE

- **When a center information display operation switch is pressed, the user recognition screen is canceled, however user recognition continues.**
- **When the select lever is not in the "P" position, the seat position will not change even when user recognition is completed.**
- **If user recognition fails, perform recognition again following the instructions, refer to "When a user is not recognized" ☞P404.**
- **User recognition is not performed while driving.**
- **If the seat position or outside mirror angle are in motion at the time when user recognition is completed, then it is not possible to retrieve the seat position, outside mirror angle, or reverse tilt-down outside mirror angle.**
- **If any of the following operations is performed while retrieving of the seat position or outside mirror angle, retrieving of the seat position and outside mirror angle is canceled.**
  - **– The power seat adjustment switch was operated.**
  - **– The outside mirror adjustment switch was operated.**
  - **– The "SET" button was pressed.**
  - **– The "1" or "2" button was pressed.**
  - **– The select lever was moved to a position other than "P" position.**

– CONTINUED –

▼ **When a user is not recognized**

In the following case, user recognition may not be possible and "User recognition stopped" may be displayed.

- There is an object blocking the camera.

Remove the obstacle and follow the reference procedure to perform user recognition again.

Refer to "Driver Monitoring System" ☞P222.

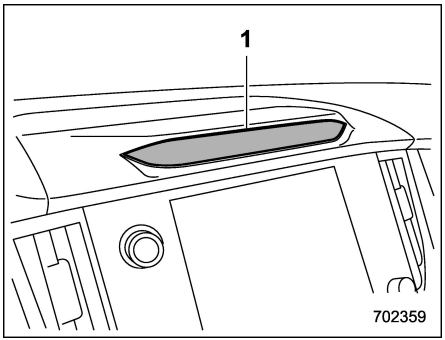

1) Camera

NOTE

- **User recognition may not be possible when there is dirt or fingerprints on the user recognition camera. To clean, either wipe using a soft cloth or else wipe gently using a moistened cloth that has been thoroughly wrung out.**
- **When the synchronized user function is turned OFF, manual repeat facial scan is not possible.**

■ Registering and Deleting a User

Users can be registered in the Driver Monitoring System, and registered users can be deleted. For the user registration and delete procedures, refer to "Driver Monitoring System" ☞P222.

NOTE

- **When the Driver Monitoring System OFF indicator, Driver Monitoring System temporary stop indicator, or Driver Monitoring System warning is illuminated, the following items cannot be selected.**
  - **Register User**
  - **Delete User**
  - **Delete All Users**
- **User information can also be deleted by resetting the center information display to the factory default settings. When the settings are reset to the factory default settings, all user information is deleted. The settings cannot be reset to the factory default settings when the Driver Monitoring System is OFF.**

■ Registering and Deleting Driver Position Personalization

At the time when a user is registered, the seat position, outside mirror angle, and reverse tilt-down outside mirror angle are registered at the same time. To change the setting for the seat position, outside mirror angle, or reverse tilt-down outside mirror angle, refer to "Driver Monitoring System" ☞P222.

NOTE

- **When the user recognition setting is OFF, or when the Driver Monitoring System OFF indicator, Driver Monitoring System temporary stop indicator, or Driver Monitoring System warning is illuminated, the following items cannot be selected.**
  - **Update Seat and Mirror Position**
  - **Delete Driver Position**
- **The driver position can be registered or deleted only when a registered user is sitting in the driver's seat and user recognition is completed.**

■ Driver Monitoring System ON/OFF Settings

NOTE

- **When the vehicle is stopped and the driver's door is opened and closed, the**

Driver Monitoring System automatically turns ON regardless of the push-button ignition switch status.

- **After the Driver Monitoring System was turned OFF, if the Driver Monitoring System is turned ON while the driver's door is open, user recognition may not occur correctly.**
- **When the Driver Monitoring System is turned OFF after user recognition was completed, the user recognition function stores the Driver Monitoring System ON/OFF state.**

▼ To turn on/off the Driver Monitoring System

To turn the Driver Monitoring System on and off, operate the center information display. Refer to "Car settings" ☞P215. When the Driver Monitoring System is turned OFF, the Driver Monitoring System OFF indicator on the combination meter display (color LCD) will illuminate.

▼ User recognition settings

The Driver Monitoring System User recognition function can be turned ON/OFF. For the setting procedure, refer to "Car settings" ☞P215.

NOTE

- **The user recognition function setting cannot be changed for each individual user.**
- **The default setting for the user recognition function is ON.**
- **When the user recognition function is turned OFF, the following items cannot be selected.**
  - **Repeat facial scan**
  - **Register User**
  - **Update Seat and Mirror Position**
  - **Delete Driver Position**

▼ Automatically retract seat on entry

The automatically retract seat on entry which automatically slides back the driver's seat when the driver's door is unlocked and opened.

This function can be turned ON/OFF. For the setting procedure, refer to "Car settings" ☞P215.

⚠ CAUTION

Sit in the seat after the power seat movement backward has been completed. Not doing so could result in injury.

NOTE

- **If the seat position is not registered in the access key fob memory, the automatically retract seat on entry function can be used.**
- **Even when the automatically retract seat on entry setting is ON, the automatically retract seat on entry function automatically turns OFF when the user recognition function is OFF.**
- **Automatically retract seat on entry cannot be selected when the Driver Monitoring System OFF indicator, Driver Monitoring System temporary stop indicator, or Driver Monitoring System warning is illuminated.**
- **This function will operate if the seat is in front of the center of the seat sliding mechanism.**

■ Certification for Driver Monitoring System U.S.-Spec. Models

⚠ CAUTION

FCC WARNING
Changes or modifications not expressly approved by the party responsible for compliance could void the user's authority to operate the equipment.

NOTE

This device complies with part 15 of the

– CONTINUED –

FCC Rules. Operation is subject to the following two conditions: (1) This device may not cause harmful interference, and (2) this device must accept any interference received, including interference that may cause undesired operation.

– **Canada-spec. models**

NOTE

This device complies with Industry Canada's licence-exempt RSSs. Operation is subject to the following two conditions: (1) This device may not cause interference; and (2) This device must accept any interference, including interference that may cause undesired operation of the device.

REMARQUE

Le présent appareil est conforme aux CNR d'Industrie Canada applicables aux appareils radio exempts de licence. L'exploitation est autorisée aux deux conditions suivantes: (1) l'appareil ne doit pas produire de brouillage; (2) l'utilisateur de l'appareil doit accepter tout brouillage radioélectrique subi, même si le brouillage est susceptible d'en compromettre le fonctionnement.

203226

– **Mexico-spec. models**

Este equipo opera a título secundario, consecuentemente, debe aceptar interferencias perjudiciales incluyendo equipos de la misma clase y puede no causar interferencias a sistemas operando a título primario.

500612

8-1. New Vehicle Break-In Driving – the First 1,000 miles (1,600 km) 410
8-2. Fuel Economy Hints 410
8-3. Engine Exhaust Gas (Carbon Monoxide)..... 410
8-4. Catalytic Converter 411
8-5. Periodic Inspections 412
8-6. Driving in Foreign Countries 412
8-7. Driving Tips for AWD Vehicles 413
8-8. Off Road Driving 414
Legacy 414
Outback 415
8-9. Winter Driving 416
Operation during Cold Weather 416
Driving on Snowy and Icy Roads 418
Corrosion Protection 419
Snow Tires 419
Tire Chains 420
Rocking the Vehicle 420
8-10. Loading Your Vehicle 420
Vehicle Capacity Weight 421
GVWR and GAWR (Gross Vehicle Weight Rating and Gross Axle Weight Rating) 422
Roof Molding and Crossbar (Legacy) 422
Roof Rails with Integrated Crossbars (Outback) 424
8-11. Trailer Hitch (Outback – If Equipped) 427
Connecting a Trailer 428
If Not Towing a Trailer 429
8-12. Trailer Towing (Legacy) 430
8-13. Trailer Towing (Outback) 430
Warranties and Maintenance 430
Maximum Load Limits 430
Trailer Hitches 433
Connecting a Trailer 434
Trailer Towing Tips 435

8-1. New Vehicle Break-In Driving – the First 1,000 miles (1,600 km)

The performance and long life of your vehicle are dependent on how you handle and care for your vehicle while it is new. Follow these instructions during the first 1,000 miles (1,600 km):

- Do not race the engine. And do not allow engine speed to exceed 4,000 rpm except in an emergency.
- Do not drive at one constant engine or vehicle speed for a long time, either fast or slow.
- Avoid starting suddenly and rapid acceleration, except in an emergency.
- Avoid hard braking, except in an emergency.

The same break-in procedures should be applied to a newly installed or overhauled engine or when brake pads are replaced with new ones.

8-2. Fuel Economy Hints

The following suggestions will help to save your fuel.

- Select the proper gear position for the speed and road conditions.
- Avoid sudden acceleration or deceleration. Always accelerate gently until you reach the desired speed. Then try to maintain that speed for as long as possible.
- Do not pump the accelerator and avoid racing the engine.
- Avoid unnecessary engine idling.
- Keep the engine properly tuned.
- Keep the tires inflated to the correct pressure shown on the tire placard, which is located under the door latch on the driver's side. Low pressure will increase tire wear and fuel consumption.
- Use the air conditioner only when necessary.
- Keep the front and rear wheels in proper alignment.
- Avoid carrying unnecessary luggage or cargo.
- The indication of the ECO gauge shows a reference for saving fuel. For details, refer to "ECO gauge" ☞P199.

8-3. Engine Exhaust Gas (Carbon Monoxide)

WARNING

- **Never inhale engine exhaust gas. Engine exhaust gas contains carbon monoxide, a colorless and odorless gas which is dangerous, or even lethal, if inhaled.**
- **Always properly maintain the engine exhaust system to prevent engine exhaust gas from entering the vehicle.**
- **Never run the engine in a closed space, such as a garage, except for the brief time needed to drive the vehicle in or out of it.**
- **Avoid remaining in a parked vehicle for a long time while the engine is running. If that is unavoidable, then use the ventilation fan to force fresh air into the vehicle.**
- **Always keep the front ventilator inlet grille free from snow, leaves or other obstructions to ensure that the ventilation system always works properly.**
- **If at any time you suspect that**

exhaust fumes are entering the vehicle, have the problem checked and corrected as soon as possible. If you must drive under these conditions, drive only with all windows fully open.

- Keep the trunk lid (Legacy) or rear gate (Outback) closed while driving to prevent exhaust gas from entering the vehicle.

NOTE

Due to the expansion and contraction of the metals used in the manufacture of the exhaust system, you may hear a crackling sound coming from the exhaust system for a short time after the engine has been shut off. This sound is normal.

8-4. Catalytic Converter

WARNING

- **Avoid fire hazards. Do not drive or park the vehicle anywhere near flammable materials (e.g. grass, paper, rags or leaves), because the catalytic converter operates at very high temperatures.**
- **Keep everyone and flammable materials away from the exhaust pipe while the engine is running. The exhaust gas is very hot.**

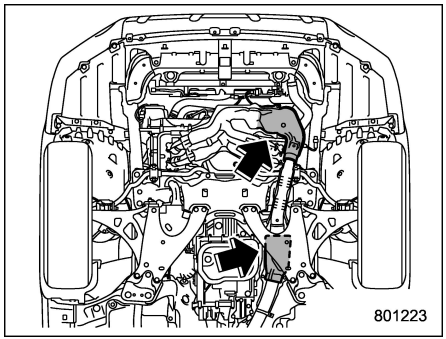

2.5 L models

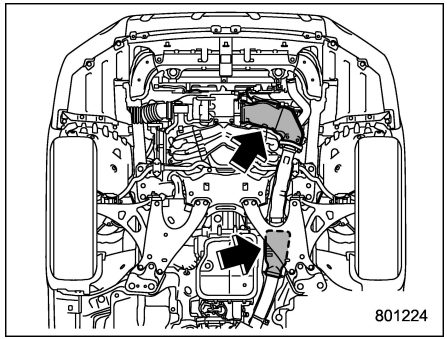

2.4 L models

The catalytic converter is installed in the exhaust system. It serves as catalyst to reduce HC, CO and NOx in exhaust gases, thus providing cleaner exhaust.

To avoid damage to the catalytic converter:

- Use only unleaded gasoline. Even a small amount of leaded gasoline will damage the catalytic converter.
- Never start the engine by pushing or pulling the vehicle.
- Avoid racing the engine.
- Never turn off the ignition switch while the vehicle is moving.
- Keep your engine tuned-up. If you feel the engine running rough (misfiring, backfiring or incomplete combustion), have your vehicle checked and repaired by an

– CONTINUED –

authorized SUBARU dealer.

- Do not apply undercoating or rust prevention treatment to the heat shield of catalytic converter and the exhaust system.
- Do not drive with an extremely low fuel level.

8-5. Periodic Inspections

To keep your vehicle in the best condition at all times, always have the recommended maintenance services listed in the maintenance schedule in the “Warranty and Maintenance Booklet” performed at the specified time or mileage intervals.

8-6. Driving in Foreign Countries

When planning to use your vehicle in another country:

- Confirm the availability of the correct fuel. Refer to “Fuel Requirements” ☞P317.
- Comply with all regulations and requirements of each country.

8-7. Driving Tips for AWD Vehicles

WARNING

- **Always maintain a safe driving speed according to the road and weather conditions in order to avoid having an accident on a sharp turn, during sudden braking or under other similar conditions.**
- **Always use the utmost care in driving – overconfidence because you are driving an All-Wheel Drive vehicle could easily lead to a serious accident.**
- **When replacing or installing tire(s), all four tires must be the same for the following items.**
  (a) Size
  (b) Speed symbol
  (c) Load index
  (d) Circumference
  (e) Construction
  (f) Manufacturer
  (g) Brand (tread pattern)
  (h) Degrees of wear

  For items (a) to (c), you must obey the specification that is printed on the tire placard. The tire placard is located on the driver's door pillar.

  If all four tires are not the same in items (a) to (h), serious mechanical damage could be caused to the drivetrain of the car, and affect the followings.
  – Ride
  – Handling
  – Braking
  – Speedometer/Odometer calibration
  – Clearance between the body and the tires

  It also may be dangerous and lead to loss of vehicle control, and it can lead to an accident.

CAUTION

If you use a temporary spare tire to replace a flat tire, be sure to use the original temporary spare tire stored in the vehicle. Using other sizes may result in severe mechanical damage to the drive train of your vehicle.

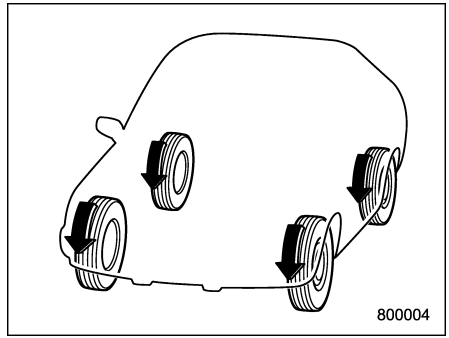

All-Wheel Drive distributes the engine power to all four wheels. AWD vehicles provide better traction when driving on slippery, wet or snow-covered roads and when moving out of mud, dirt and sand. By shifting power between the front and rear wheels, SUBARU AWD can also provide added traction during acceleration, and added engine braking force during deceleration.

Therefore, your SUBARU AWD vehicle may handle differently than an ordinary two wheel drive vehicle and it contains some features unique to AWD. For safety purposes as well as to avoid damaging the AWD system, you should keep the following tips in mind:

- An AWD vehicle is better able to climb steeper roads under snowy or slippery

– CONTINUED –

conditions than a two wheel drive vehicle. There is little difference in handling, however, during extremely sharp turns or sudden braking. Therefore, when driving down a slope or turning corners, be sure to reduce your speed and maintain an ample distance from other vehicles.

- Always check the cold tire pressure before starting to drive. The recommended tire pressure is provided on the tire placard, which is located on the door pillar on the driver's side.
- Frequent driving of an AWD vehicle under hard-driving conditions such as steep hills or dusty roads will necessitate more frequent replacement of the following items than that specified in the "Warranty and Maintenance Booklet"
  - Engine oil
  - Brake fluid
  - Rear differential gear oil
  - Continuously variable transmission fluid
  - Front differential gear oil
- There are some precautions that you must observe when towing your vehicle. For detailed information, refer to "Towing" ☞P452.

8-8. Off Road Driving

WARNING

- **Always maintain a safe driving speed according to the road and weather conditions in order to avoid having an accident on a sharp turn, during sudden braking or under other similar conditions.**
- **Always use the utmost care in driving – overconfidence because you are driving an All-Wheel Drive vehicle could easily lead to a serious accident.**
- **In a rollover crash, an unbelted person is significantly more likely to die than a person wearing a seat belt. You the driver and all your passengers should fasten the seatbelts before starting to drive in order to minimize the chance of serious injury or death.**
- **Do not make sharp turns or quick maneuvers unless absolutely unavoidable. Such actions are dangerous as you may lose control, possibly resulting in a rollover which could cause death or serious injury.**
- **Whenever strong crosswinds are present, slow down sufficiently to maintain control of your vehicle. Remember that your vehicle, with its higher profile and center of gravity, is more likely to be affected by crosswinds than ordinary passenger cars.**

■ Legacy

Your AWD vehicle is neither a conventional off-road vehicle nor an all terrain vehicle. It is a passenger car designed primarily for on-road use. The AWD feature gives it some limited off-road capabilities in situations in which the driving surface is relatively level, obstruction-free and otherwise similar to on-road driving conditions. Operating it under other than those conditions could subject the vehicle to excessive stress which might result in damage not eligible for repair under warranty. If you do take your SUBARU off road, you should review the common sense precautions in the next section (applicable to the Outback) for general guidance. But please keep in mind that your vehicle's off-road capabilities are more limited than those of the Outback.

Never attempt to drive through pools and puddles, or roads flooded with water.

Water entering the engine air intake or the exhaust pipe or water splashing onto electrical parts may damage your vehicle and may cause it to stall.

■ Outback

⚠ CAUTION

Frequent driving of an AWD model under hard-driving conditions such as rough roads or off roads will necessitate more frequent replacement of the following items than that specified in the maintenance schedule described in the "Warranty and Maintenance Booklet."

- **Engine oil**
- **Brake fluid**

Remember that damage done to your SUBARU while operating it off-road and not using common sense precautions such as those listed above is not eligible for warranty coverage.

Your vehicle is classified as a utility vehicle. Utility vehicles feature a higher ground clearance which enables them to be used for wide applications including off-road driving. But please keep in mind that your vehicle is neither a conventional off-road vehicle nor an all-terrain vehicle. A higher center of gravity in relation to the tread width as compared with ordinary passenger cars makes vehicles of this type more likely to roll over. In reality, utility vehicles have a significantly higher roll-over rate than other types of vehicles. The high ground clearance of this vehicle is a real advantage, giving you a better view of the road and allowing you to anticipate problems earlier. However, remember that your utility vehicle is not designed for high-speed cornering comparable to ordinary passenger cars and that your vehicle could roll over if you make a sharp turn at high speed. If you do take your SUBARU off-road, certain common sense precautions such as those in the following list should be taken.

▼ Before driving

- Make certain that you and all of your passengers are wearing seatbelts.
- Carry some emergency equipment, such as a towing rope or chain, a shovel, wheel blocks, first aid kit and cell phone or citizens band radio.
- Secure all cargo carried inside the vehicle and make certain that it is not piled higher than the seatbacks. During sudden stops or jolts, unsecured cargo could be thrown around in the vehicle and cause injury. Do not pile heavy loads on the roof. Those loads raise the vehicle's center of gravity and make it more prone to tip over.
- Never equip your vehicle with tires larger than those specified in this manual.

▼ During driving

General precautions:

- Drive carefully. Do not take unnecessary risks by driving in dangerous areas or over rough terrain.
- Slow down and employ extra caution at all times. When driving off-road, you will not have the benefit of marked traffic lanes, banked curves, traffic signs and the like.
- Do not drive across steep slopes. Instead, drive either straight up or straight down the slopes. A vehicle can much more easily tip over sideways than it can end over end. Avoid driving straight up or down slopes that are too steep.
- Avoid sharp turning maneuvers, especially at higher speeds.
- Do not grip the inside or spokes of the steering wheel. A bad bump could jerk the wheel and injure your hands. Instead, drive with your fingers and thumbs on the outside of the rim.
- Do not drive or park over or near flammable materials such as dry grass or fallen leaves, as they may burn easily. The

– CONTINUED –

exhaust system is very hot while the engine is running and right after the engine stops. This could create a fire hazard.

Precautions when driving under especially dangerous situations:

- If driving through water, such as when crossing shallow streams:
  - First, check the depth of the water and the bottom of the stream bed for firmness.
  - Next, ensure that the bed of the stream is flat.
  - Then, drive slowly and completely through the stream. The water should be shallow enough that it does not reach the vehicle's undercarriage.
- Water entering the engine air intake or the exhaust pipe or water splashing onto electrical parts may damage your vehicle and may cause it to stall. Never drive through rushing water. Regardless of its depth, it can wash away the ground from under your tires, resulting in possible loss of traction and even vehicle rollover.
- If you must rock the vehicle to free it from sand or mud, depress the accelerator pedal slightly and move the select lever back and forth between "D" and "R" repeatedly. Do not race the engine. For the best possible traction, avoid spinning the wheels when trying to free the vehicle.
- When the road surface is extremely slippery, you can obtain better traction by starting the vehicle with the transmission in 2nd than 1st. Refer to "Selection of Manual Mode" ☞P340.

▼ **After driving**

- Always check your brakes for effectiveness immediately after driving in sand, mud or water. Do this by driving slowly and stepping on the brake pedal. Repeat that process several times to dry out the brake discs and brake pads.
- After driving through tall grass, mud, rocks, sand, rivers, etc., check that there is no grass, bush, paper, rags, stones, sand, etc. adhering to or trapped on the underbody. Clear off any such matter from the underbody. If the vehicle is used with these materials trapped or adhering to the underbody, a mechanical breakdown or fire could occur.
- Wash the vehicle's underbody after off-road driving. Suspension components are particularly prone to dirt buildup, so they need to be washed thoroughly.

8-9. Winter Driving

■ Operation during Cold Weather

Carry some emergency equipment, such as a window scraper, a bag of sand, flares, a small shovel and jumper cables.

Check the battery and cables. Cold temperatures reduce battery capacity. The battery must be in good condition to provide enough power for cold winter starts.

It normally takes longer to start the engine in very cold weather conditions. Use an engine oil of a proper grade and viscosity for cold weather. Using heavy summer oil will make it harder to start the engine.

Keep the door locks from freezing by squirting them with deicer or glycerin.

Forcing a frozen door open may damage or separate the rubber weather strips around the door. If the door is frozen, use hot water to melt the ice, and afterwards thoroughly wipe the water away.

Use a windshield washer fluid that contains an antifreeze solution. Do not use engine antifreeze or other substitutes because they may damage the paint of the vehicle.

If you fill the windshield washer tank with a fluid with a different concentration from the one used previously, purge the old fluid from the piping between the windshield washer tank and washer nozzles by operating the washer for a certain period of time. Otherwise, if the concentration of the fluid remaining in the piping is too low for the outside temperature, it may freeze and block the nozzles.

CAUTION

- **Adjust the washer fluid concentration appropriately for the outside temperature. If the concentration is inappropriate, sprayed washer fluid may freeze on the windshield and obstruct your view, and the fluid may freeze in the windshield washer tank.**
- **State or local regulations on volatile organic compounds may restrict the use of methanol, a common windshield washer antifreeze additive. Washer fluids containing non-methanol antifreeze agents should be used only if they provide cold weather protection without damaging your vehicle's paint, wiper blades or washer system.**

▼ Before driving your vehicle

Before entering the vehicle, remove any snow or ice from your shoes because that could make the pedals slippery and driving dangerous.

While warming up the vehicle before driving, check that the accelerator pedal, brake pedal, and all other controls operate smoothly.

Clear away ice and snow that has accumulated under the fenders to avoid making steering difficult. During severe winter driving, stop when and where it is safe to do so and check under the fenders periodically.

▼ Parking in cold weather

WARNING

Snow can trap dangerous exhaust gases under your vehicle. Keep snow clear of the exhaust pipe and from around your vehicle if you park the vehicle in snow with the engine running.

CAUTION

- **Do not use the parking brake when parking for long periods in cold weather since it could freeze in that position.**
- **When the vehicle is parked in snow or when it snows, raise the wiper blades off the glass to prevent damage to them.**
- **Under either of the following conditions, icing may develop on the brake system, which could cause poor braking action.**
  - **When the vehicle has been left parked after use on roads heavily covered with snow**
  - **When the vehicle has been left parked during a snowstorm**

  Check for snow or ice buildup on the suspension, disc brakes and brake hoses underneath the vehicle. If there is caked snow or ice, remove it, being careful not to damage the disc brakes and brake hoses and ABS harness.

When parking for long periods in cold weather, you should observe the following tips.

1. Place the select lever in the "P" position.
2. Use tire stops under the tires to prevent the vehicle from moving.

– CONTINUED –

▼ **Refueling in cold weather**

To help prevent moisture from forming in the fuel system and the risk of its freezing, use of an antifreeze additive in the fuel tank is recommended during cold weather.

Use only additives that are specifically designed for this purpose. When an antifreeze additive is used, its effect lasts longer if the tank is refilled whenever the fuel level reaches half empty.

If your SUBARU is not going to be used for an extended period, it is best to have the fuel tank filled to capacity.

■ Driving on Snowy and Icy Roads

⚠ WARNING

Do not use the cruise control on slippery roads such as snowy or icy roads. This may cause loss of vehicle control.

⚠ CAUTION

Avoid prolonged continuous driving in snowstorms. Snow will enter the engine's intake system and may hinder the airflow, which could result in engine shutdown or even breakdown.

To prevent skidding and slipping, avoid sudden braking, abrupt acceleration, high-speed driving, and sharp turning when driving on snowy or icy roads.

Always maintain ample distance between your vehicle and the vehicle ahead of you to avoid the need for sudden braking.

To supplement the foot brake, use the engine brake effectively to control the vehicle speed. (Shift into a lower gear when necessary.)

Avoid shifting down abruptly. Such behavior can cause the wheels to lock, possibly leading to loss of vehicle control.

An anti-lock brake system (ABS) enhances your vehicle's braking performance on snowy and icy roads. For information about braking on slippery surfaces, refer to "ABS (Anti-Lock Brake System)" ☞P346 and "Vehicle Dynamics Control System" ☞P347.

▼ **Wiper operation when snowing**

Before driving in cold weather, make sure the wiper blade rubbers are not frozen to the windshield or rear window.

If the wiper blade rubbers are frozen to the windshield or rear window, perform the following procedure.

- To thaw the windshield wiper blade rubbers, use the defroster with the airflow selection in "" and the temperature set for maximum warmth until the wiper blade rubbers are completely thawed. Refer to "Climate Control" ☞P271.
- If your vehicle is equipped with a wiper deicer, use it. It is helpful to thaw the windshield wiper blade rubbers. Refer to "Defogger and Deicer" ☞P254.
- To thaw the rear wiper blade rubbers, use the rear window defogger. Refer to "Defogger and Deicer" ☞P254.

When driving in snow, if frozen snow starts to stick on the surface of the windshield despite wiper operation, use the defroster with the airflow selection in "" and the temperature set for maximum warmth. After the windshield gets warmed enough to melt the frozen snow on it, wash it away using the windshield washer. Refer to "Windshield washer" ☞P253.

Snow stuck on the wiper arm prevents the wiper from working effectively. If snow is stuck on the wiper arm, pull off the road to a safe place, then remove it. If you stop the vehicle at road side, use the hazard warning flasher to alert other drivers. Refer to "Hazard Warning Flasher" ☞P170.

We recommend use of non-freezing type

wiper blades (winter blades) during the seasons you could have snow and freezing temperatures. Blades of this type give superior wiping performance in snowy conditions. Be sure to use blades that are suitable for your vehicle.

CAUTION

During high-speed driving, non-freezing type wiper blades may not perform as well as standard wiper blades. If this happens, reduce the vehicle speed.

NOTE

When the season requiring non-freezing type wiper blades is over, replace them with standard wiper blades.

■ Corrosion Protection

Refer to “Corrosion Protection” ☞P466.

■ Snow Tires

WARNING

- **When replacing or installing winter tire(s), all four tires must be the same for the following items.**
  (a) Size
  (b) Speed symbol
  (c) Load index
  (d) Circumference
  (e) Construction
  (f) Manufacturer
  (g) Brand (tread pattern)
  (h) Degrees of wear

  For items (a) to (c), you must obey the specification that is printed on the tire placard. The tire placard is located on the driver’s door pillar.

  If all four tires are not the same in items (a) to (h), serious mechanical damage could be caused to the drivetrain of the car, and affect the followings.
  - **Ride**
  - **Handling**
  - **Braking**
  - **Speedometer/Odometer calibration**
  - **Clearance between the body and the tires**

  It also may be dangerous and lead to loss of vehicle control, and it can lead to an accident.

- **Do not use a combination of radial, belted bias or bias tires since it may cause dangerous handling characteristics and lead to an accident.**

Your vehicle is equipped with “all season tires” which are designed to provide an adequate measure of traction, handling and braking performance in year-round driving. In winter, it may be possible to enhance performance through use of tires designed specifically for winter driving conditions.

If you choose to install winter tires on your vehicle, be sure to use the correct tire size and type. You must install four winter tires that are of the same size, construction, brand and load range and you should never mix radial, belted bias or bias tires since this may result in dangerous handling characteristics. When you choose a tire, make sure that there is enough clearance between the tire and vehicle body.

Remember to drive with care at all times regardless of the type of tires on your vehicle.

– CONTINUED –

■ Tire Chains

⚠ CAUTION

Tire chains cannot be used on your vehicle because of the lack of clearance between the tires and vehicle body.

NOTE

When tire chains cannot be used, use of another type of traction device (such as spring chains) may be acceptable if use on your vehicle is recommended by the device manufacturer, taking into account tire size and road conditions. Follow the device manufacturer's instructions, especially regarding maximum vehicle speed.

To help avoid damage to your vehicle, drive slowly, readjust or remove the device if it is contacting your vehicle, and do not spin your wheels. Damage caused to your vehicle by use of a traction device is not covered under warranty.

Make certain that any traction device you use is an SAE class S device, and use it on the front wheels only. Always use the utmost care when driving with a traction device. Overconfidence because you are using a traction device could easily lead to a serious accident.

■ Rocking the Vehicle

If you must rock the vehicle to free it from snow, sand, or mud, depress the accelerator pedal slightly and move the select lever back and forth between "D" and "R" repeatedly. Do not race the engine. For the best possible traction, avoid spinning the wheels when trying to free the vehicle.

When the road surface is extremely slippery, you can obtain better traction by starting the vehicle with the transmission in 2nd than 1st.

For information on holding the transmission in 2nd position, refer to "Selection of Manual Mode" ☞P340.

8-10. Loading Your Vehicle

⚠ WARNING

Never allow passengers to ride on a folded rear seatback, in the trunk or in the cargo area. Doing so may result in serious injury.

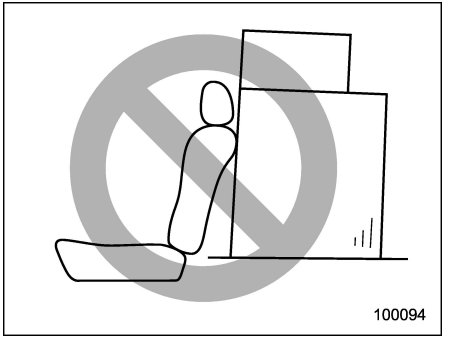

WARNING

- **Never stack luggage or other cargo higher than the top of the seatback because it could tumble forward and injure passengers in the event of a sudden stop or accident. Keep luggage or cargo low, as close to the floor as possible.**
- **When you carry something inside the vehicle, secure it whenever you can to prevent it from being thrown around inside the vehicle during sudden stops, sharp turns or in an accident.**
- **Do not pile heavy loads on the roof. These loads raise the vehicle's center of gravity and make it more prone to tip over.**
- **Secure long items properly to prevent them from shooting forward and causing serious injury during a sudden stop.**
- **Never exceed the maximum load limit. If you do, some parts on your vehicle can break, or it can change the way your vehicle handles. This could result in loss of control and cause personal injury. Also, overloading can shorten the life of your vehicle.**
- **Do not place anything on the rear shelf behind the rear seatback (Legacy) or the extended cargo area cover (Outback – if equipped). Such items could tumble forward in the event of a sudden stop or a collision. This could cause serious injury.**

CAUTION

Do not carry spray cans, containers with flammable or corrosive liquids or any other dangerous items inside the vehicle.

NOTE

For better fuel economy, do not carry unneeded cargo.

■ Vehicle Capacity Weight

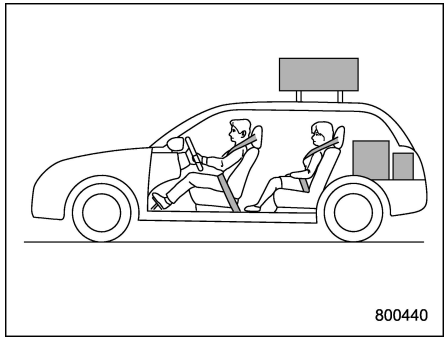

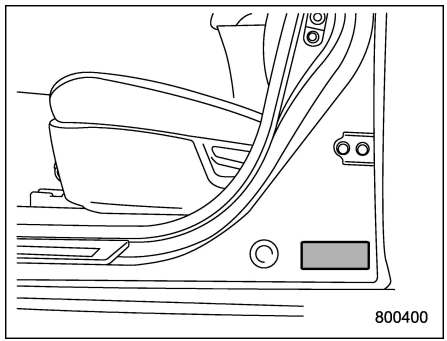

The load capacity of your vehicle is determined by weight, not by available cargo space. The maximum load you can carry in your vehicle is shown on the vehicle placard attached to the driver's

– CONTINUED –

side door pillar. It includes the total weight of the driver and all passengers and their belongings, any optional equipment such as a trailer hitch, roof rack or bike carrier, etc., and the tongue load of a trailer.

■ GVWR and GAWR (Gross Vehicle Weight Rating and Gross Axle Weight Rating)

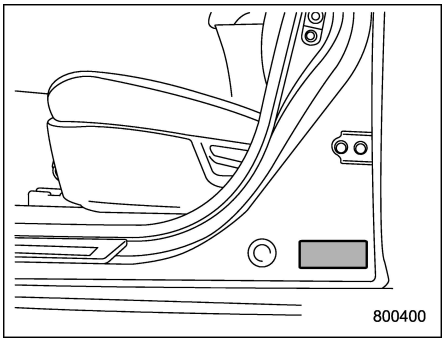

Certification label

The certification label attached to the driver's side door pillar shows GVWR (Gross Vehicle Weight Rating) and GAWR (Gross Axle Weight Rating).

The GVW (Gross Vehicle Weight) must never exceed the GVWR. GVW is the combined total of weight of the vehicle, fuel, driver, all passengers, luggage, any optional equipment and trailer tongue load. Therefore, the GVW changes depending on the situation.

In addition, the total weight applied to each axle (GAW) must never exceed the GAWR. The front and rear GAWs can be adjusted by relocating luggage inside the vehicle.

Even if the total weight of your luggage is lower than the vehicle capacity weight, either front or rear GAW may exceed the GAWR, depending on the distribution of the luggage.

When possible, the load should be evenly distributed throughout the vehicle.

If you carry heavy loads in the vehicle, you should confirm that GVW and front and rear GAWs are within the GVWR and GAWR by putting your vehicle on a vehicle scale, found at a commercial weighing station.

Do not use replacement tires with a lower load range than the originals because they may lower the GVWR and GAWR limitations. Replacement tires with a higher load range than the originals do not increase the GVWR and GAWR limitations.

■ Roof Molding and Crossbar (Legacy)

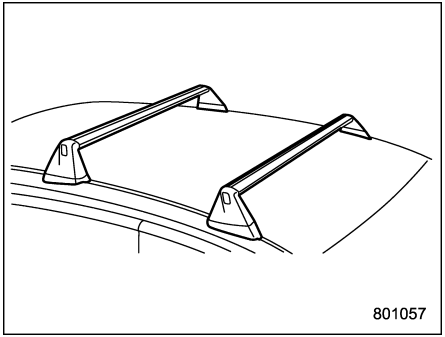

⚠ CAUTION

- **For cargo carrying purposes, the roof molding must be used together with a roof crossbar kit and the appropriate carrying attachment. Otherwise, damage to the roof or paint or a road hazard due to loss of cargo could result.**
- **When using the roof crossbar kit, make sure that the total weight of the crossbars, carrying attachment and cargo does not exceed the maximum load limit. Overloading may cause damage to the vehicle and create a safety**

hazard.

- **Do not install a roof tent on the vehicle. Doing so may damage the vehicle and create a safety hazard. SUBARU warranties do not cover vehicle damage resulting from use of a roof tent.**

Cargo can be carried after securing the roof crossbar kit to the roof molding and installing the appropriate carrying attachment. When installing the roof crossbar kit, follow the manufacturer's instructions.

When carrying cargo on the roof using the roof crossbar kit and carrying attachments, never exceed the maximum load limit as explained below. You should also be careful that the vehicle does not exceed the Gross Vehicle Weight Rating (GVWR) and front and rear Gross Axle Weight Rating (GAWR). For information about loading cargo into or onto your vehicle, refer to "Loading Your Vehicle" ☞P420. The maximum total load on the roof (including crossbars, carrying attachments and cargo) must not exceed **88 lbs (40 kg)**. Refer to the crossbar installation instructions for the maximum crossbar capacity. Place the heaviest load at the bottom, close to the roof, and evenly distribute the cargo. Always properly secure all cargo.

▼ Installing carrying attachments on the crossbars

When installing any carrying attachments such as the load carriers, crossbars, bike carrier, ski carrier, kayak carrier, cargo basket, etc., follow the manufacturer's instructions for the load capacity and make sure that the attachments are securely installed. Use only attachments designed specifically for the crossbars. Before operating the vehicle, make sure that the cargo is properly secured on the attachment.

NOTE

Remember that the vehicle's center of gravity is altered with the weight of the load on the roof, thus affecting the driving characteristics.

Drive carefully. Avoid rapid starts, hard cornering and abrupt stops. Crosswind effects will be increased.

▼ Removal and installation of the crossbars

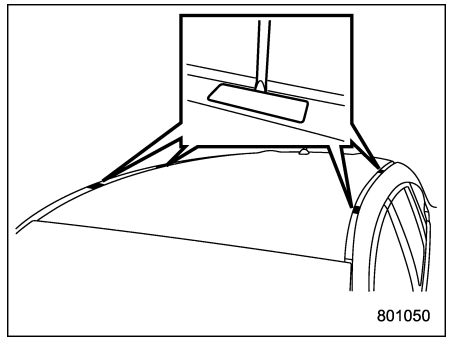

Each of the two roof moldings has two mounting points for crossbars. Each mounting point is fitted with a cover. Use a screwdriver to open the covers. When installing the crossbars on the roof molding, follow the manufacturer's instructions.

– CONTINUED –

■ Roof Rails with Integrated Crossbars (Outback)

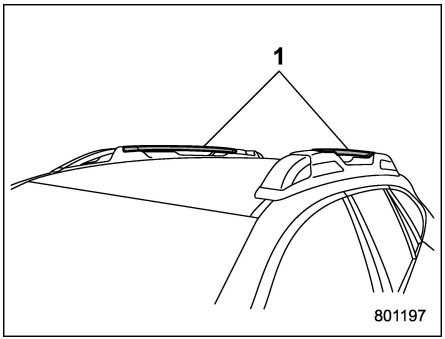

1) Integrated crossbars

⚠ CAUTION

- **For cargo carrying purposes, the crossbars must be extended across the roof and locked into the roof rails. Cargo must be attached to the crossbars using genuine SUBARU accessory crossbar attachments. The crossbars must never be used independently to carry cargo on the roof. Otherwise, damage to the roof or paint or a dangerous road hazard due to loss of cargo could result.**
- **When loading cargo on the crossbars, using the genuine SUBARU accessory crossbar attachments, make sure the total weight of the crossbar attachments, and loaded cargo, does not exceed the maximum load limit of 150 lbs (67.5 kg). Overloading may cause damage to the vehicle and create a safety hazard.**
- **Be careful not to damage the vehicle body when passing the rope through the front and rear holes of the roof rails.**
- **Do not install a roof tent on the vehicle. Doing so may damage the vehicle and create a safety hazard. SUBARU warranties do not cover vehicle damage resulting from use of a roof tent.**

The crossbars must be extended across the roof and locked into the roof rails to carry cargo on the roof. Cargo can only be carried on the crossbars using the genuine SUBARU accessory crossbar attachments.

When you carry cargo on the roof using the crossbars and a carrying attachment, never exceed the maximum load limit explained in the following. You should also be careful that your vehicle does not exceed the Gross Vehicle Weight Rating (GVWR) and front and rear Gross Axle Weight Rating (GAWR). For information on loading cargo into or onto your vehicle, refer to “Loading Your Vehicle” ☞P420. The maximum load limit of the cargo and carrying attachment must not exceed the allowable load limit described in the Owner’s Manual of a genuine SUBARU carrying attachment. Place the heaviest load at the bottom, nearest the roof, and evenly distribute the cargo. Always properly secure all cargo.

▼ Installing carrying attachments on the crossbars

When installing any carrying attachments such as the load carriers, crossbars, bike carrier, ski carrier, kayak carrier, cargo basket, etc., follow the manufacturer’s instructions of the load capacity and make sure that the attachments are securely installed. Use only attachments designed specifically for the crossbars. Before operating the vehicle, make sure that the cargo is properly secured on the attachment.

NOTE

- **Remember that the vehicle’s center of gravity is altered with the weight of the load on the roof, thus affecting the driving characteristics. Drive carefully,**

avoid rapid starts, hard cornering and abrupt stops. Crosswind effects will be increased.

- **Restore the bars to the original position when the bars are not used as crossbars.**

▼ **How to use as crossbars**

CAUTION

- **Do not raise the bar higher than necessary. The base of the bar may be damaged.**
- **Be careful not to contact the bars while sliding them. Otherwise, the bars may be scratched or the latch portions may be damaged.**
- **Do not slide the bar more than necessary when sliding the bar. The base of the bar may be damaged.**
- **Do not allow the bar to fall on or contact the roof panel or the moonroof when sliding the bar. Otherwise the roof panel may be dented or the glass of the moonroof may be damaged.**
- **Be careful hands do not become pinched when operating the cross bar. Hands becoming pinched could result in injury.**

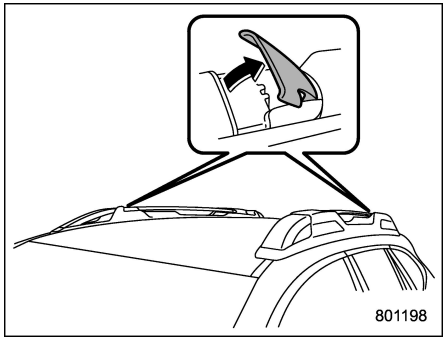

1. Pull out the integrated crossbars from the roof rail holders by pulling up the covers.

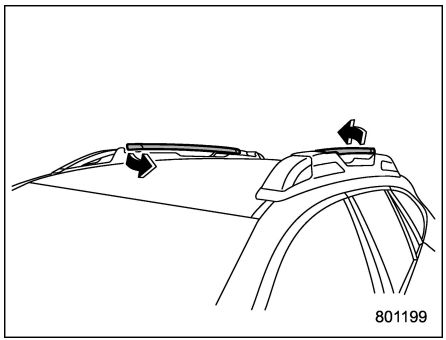

2. Slide the bars in the direction shown in the illustration.

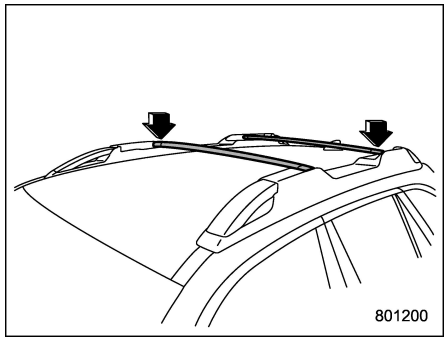

3. Install the bars into the holders.
4. Make sure that the latches are fitted securely.

▽ **How to change the position of the crossbar**

WARNING

Carefully read the warning label attached to the roof rail.

You can change the position of the rear crossbar. To change the position, perform the following procedure.

1. Take out the torque wrench from the under-floor storage compartment.

– CONTINUED –

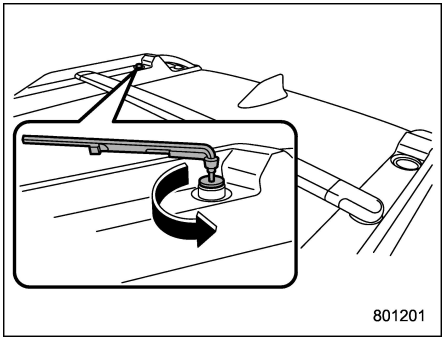

2. Remove the plastic plug of the roof rail holder by using the torque wrench.

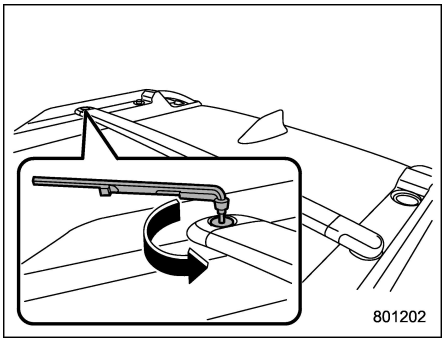

3. Remove the bolt of the crossbar by using the torque wrench and pull this side out.

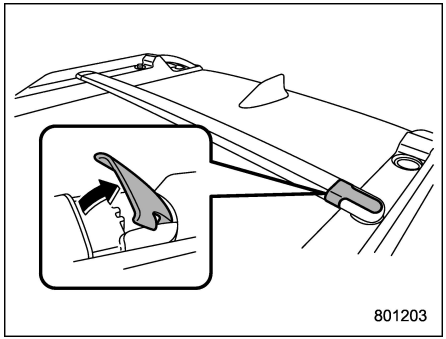

4. Pull out the other side of the crossbar from the roof rail holder by pulling up the cover.

5. Install both ends of the crossbar into the other holders.

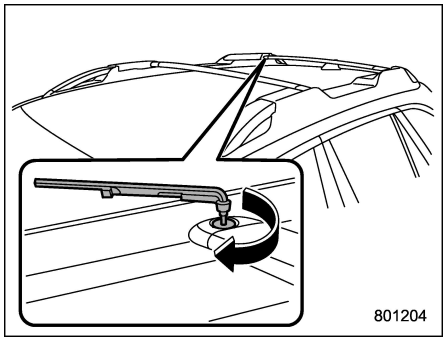

6. Tighten the bolt of the crossbar by using the torque wrench. The tightening torque is approximately 8.9 ± 2.2 lbf·ft (12 ± 3.0 N·m, 1.2 ± 0.3 kgf·m).

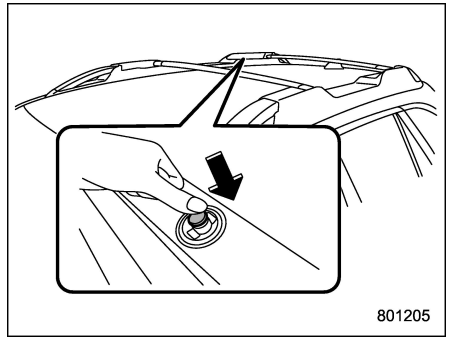

7. Install the plastic plug by pushing it into the hole until it is fully seated.

▼ How to re-stow bars

⚠ CAUTION

Do not use the bars as roof rails when the bars are stowed.

1. Check that the rear crossbar is stowed in the front side holder.

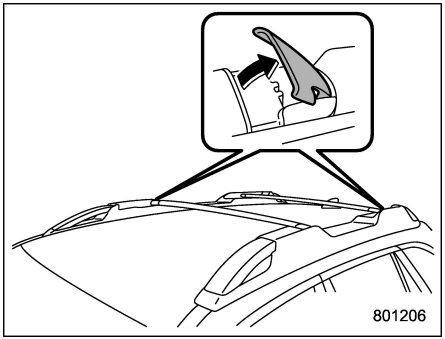

2. Pull out the crossbars from the roof rail holders by pulling up the covers.

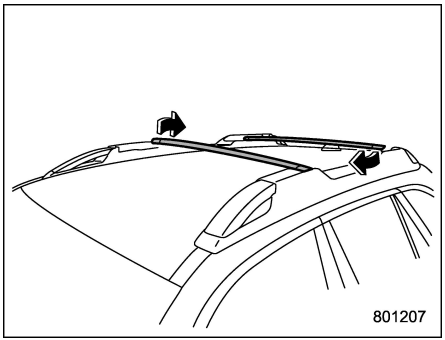

3. Slide the bars in the direction shown in the illustration.

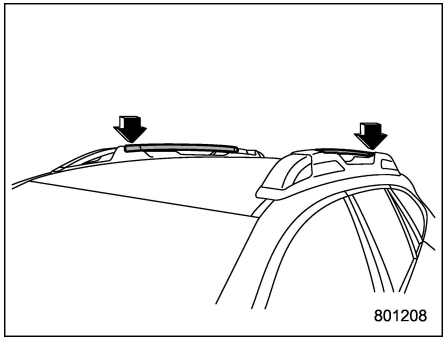

4. Install the bars into the holders.
5. Make sure that the latches are fitted securely.

8-11. Trailer Hitch (Outback – If Equipped)

WARNING

- **Never exceed the maximum weight specified for the trailer hitch. Exceeding the maximum weight could cause an accident resulting in serious personal injuries. Permissible trailer weight changes depending on the situation. For possible recommendations and limitations, refer to "Trailer Towing (Outback)" ☞P430.**
- **Trailer brakes are required when the towing load exceeds 1,000 lbs (453 kg). Be sure your trailer has safety chains and that each chain will hold the trailer's maximum gross weight. Towing trailers without safety chains could create a traffic safety hazard if the trailer separates from the hitch due to coupling damage or hitch ball damage.**
- **Be sure to check the hitch pin and safety pin for positive locking placement before towing a trailer. If the ball mount comes off the**

– CONTINUED –

hitch receiver, the trailer could get loose and create a traffic safety hazard.

- **Use only the ball mount supplied with this hitch. Use the hitch only as a weight carrying hitch. Do not use with any type of weight distributing hitch.**
- **The standard bumper beam must be installed after you remove the trailer hitch. Consult a SUBARU dealer for purchase of a standard bumper beam if you do not have the original.**
- **If a trailer hitch is installed, it is not possible to install the rear towing hook.**

The maximum gross trailer weight and maximum gross tongue weight are indicated in the following table.

	Maximum gross trailer weight	Maximum gross tongue weight
2.4 L models	3,500 lbs (1,588 kg)	350 lbs (159 kg)
2.5 L models	2,700 lbs (1,224 kg)	270 lbs (122 kg)

When towing a trailer, refer to “Trailer Towing (Outback)” ☞P430.

■ Connecting a Trailer

1. Remove the receiver cover from the hitch receiver tube. Then insert the ball mount into the hitch receiver tube.

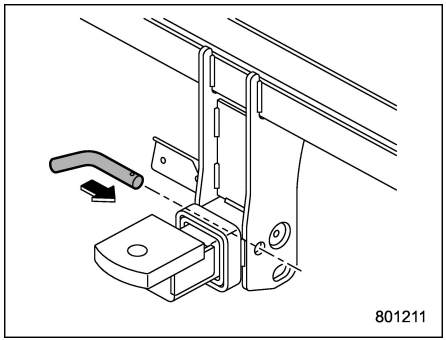

2. Insert the hitch pin into the hole located on the hitch receiver tube so that the pin passes through the ball mount.

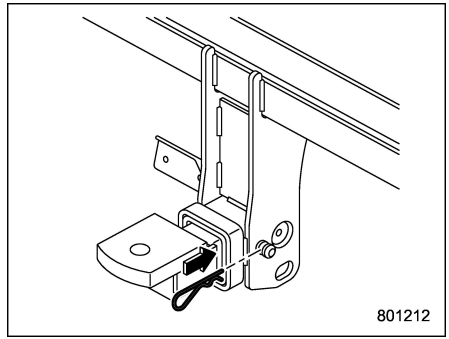

3. Insert the safety pin through the provided hole on the hitch pin securely.
4. Check the ball mount assembly by pulling on it to make sure it does not come off the hitch receiver.

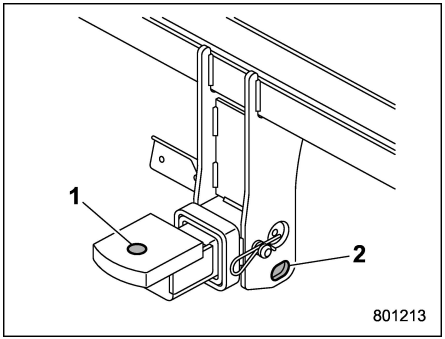

1) Hitch ball installation point
2) Hooks for safety chains

5. Use only a hitch ball that is appropriate for the ball mount and your trailer. The hitch ball must be securely installed on the ball mount.

6. Connect your trailer to the hitch ball.

7. Connect the trailer and the hitch with safety chains that will hold the trailer's maximum gross weight. The chains should cross under the trailer tongue to prevent the tongue from dropping onto the ground in case it should disconnect from the hitch ball. Allow sufficient slack in the chains taking tight turn situations into account; however, be careful not to let them drag on the ground.

WARNING

Do not connect safety chains to any part of the vehicle other than the safety chain hooks.

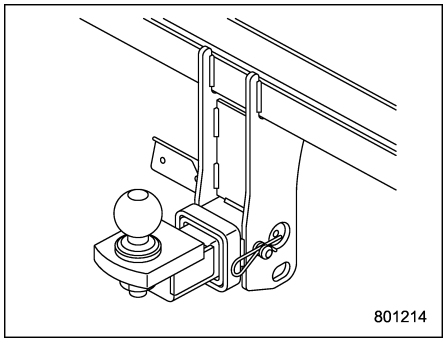

Hitch harness connector

8. Connect the hitch wire harness's black four-pin wire connector to the towing trailer's wire harness.

9. Confirm proper function of the hitch wire harness by individually activating the brake, stop and turn signal lights on the trailer.

NOTE

Always disconnect the trailer wire harness before launching or retrieving a watercraft.

■ If Not Towing a Trailer

- Remove the ball mount from the hitch receiver tube and insert the receiver cover onto the hitch receiver tube.
- Place the dust cap over the four-pin connector of the hitch wire harness to protect against possible damage.
- Occasionally lubricate terminals of the four-pin connector using terminal grease.

8-12. Trailer Towing (Legacy)

CAUTION

Your vehicle is neither designed nor intended to be used for trailer towing. Therefore, never tow a trailer with your vehicle.

SUBARU assumes no responsibility for injuries or vehicle damage that may result from trailer towing, from any trailer towing equipment or from any errors or omissions in the instructions accompanying such equipment. SUBARU warranties do not apply to vehicle damage or malfunction caused by trailer towing.

8-13. Trailer Towing (Outback)

Your vehicle is designed and intended to be used primarily as a passenger-carrying vehicle. Towing a trailer puts additional loads on your vehicle's engine, drivetrain, brakes, tires and suspension and has an adverse effect on fuel economy and air conditioning system cooling performance.

If you do decide to tow a trailer, your safety and satisfaction depend upon proper use of correct equipment and cautious operation of your vehicle. Drive carefully when towing a trailer, and always consider the following conditions.

- Road conditions
- Weather conditions
- Vehicle load weight
- Trailer load weight

Seek the advice of your SUBARU dealer to assist you in purchasing a hitch and other necessary towing equipment appropriate for your vehicle. Do not use towing equipment other than genuine SUBARU towing equipment. In addition, be sure to follow the instructions on correct installation and use provided by SUBARU.

SUBARU assumes no responsibility for injuries or vehicle damage that result from trailer towing equipment, or from any errors or omissions in the instructions accompanying such equipment or for your failure to follow the proper instructions. Regularly check that the hitch mounting bolts and nuts are tightened securely.

■ Warranties and Maintenance

SUBARU warranties do not apply to vehicle damage or malfunction caused by trailer towing. If you use your vehicle to tow a trailer, more frequent maintenance will be required due to the additional load. (Refer to "Maintenance schedule under severe driving conditions" in the "Warranty and Maintenance Booklet.")

Under no circumstances should a trailer be towed with a new vehicle or a vehicle with any new powertrain component (engine, transmission, differential, wheel bearings, etc.) for the first 1,000 miles (1,600 km) of driving.

■ Maximum Load Limits

WARNING

Never exceed the maximum load limits explained in the following. Exceeding the maximum load limits

could cause personal injury and/or vehicle damage.

CAUTION

Before towing a trailer, check the trailer total weight, GVW, GAWs and tongue load. Make sure the load and its distribution in your vehicle and trailer are acceptable.

▼ Total trailer weight

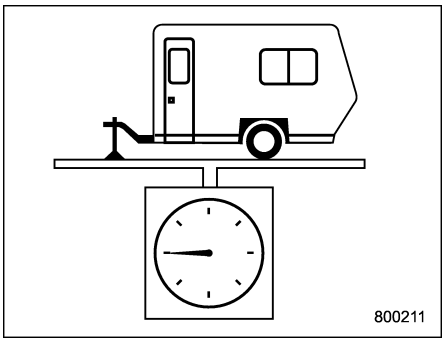

Total trailer weight

The total trailer weight (trailer weight plus its cargo load) must never exceed the maximum total trailer weight. The maximum total trailer weight is indicated in the following tables.

2.4 L models

Conditions	Maximum total trailer weight	Maximum tongue weight
When towing a trailer without brakes.	1,000 lbs (453 kg)	100 lbs (45 kg)
When towing a trailer with brakes.	3,500 lbs (1,588 kg)	350 lbs (159 kg)

2.5 L models

Conditions	Maximum total trailer weight	Maximum tongue weight
When towing a trailer without brakes.	1,000 lbs (453 kg)	100 lbs (45 kg)
When towing a trailer with brakes.	2,700 lbs (1,224 kg)	270 lbs (122 kg)

– CONTINUED –

▼ Gross Vehicle Weight (GVW) and Gross Vehicle Weight Rating (GVWR)

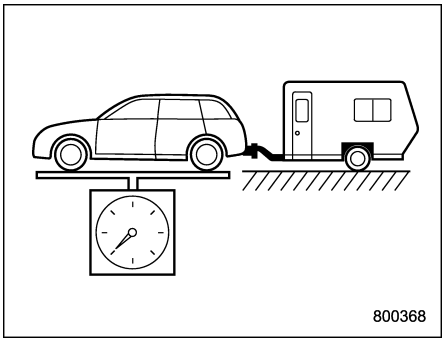

Gross Vehicle Weight

The Gross Vehicle Weight (GVW) must never exceed the Gross Vehicle Weight Rating (GVWR).

Gross Vehicle Weight (GVW) is the combined total of the weight of the vehicle, driver, passengers, luggage, trailer hitch, trailer tongue load and any other optional equipment installed on your vehicle. Therefore, the GVW changes depending on the situation. Determine the GVW each time before going on a trip by putting your vehicle and trailer on a vehicle scale.

The GVWR of your vehicle that is set by SUBARU is shown on the certification label located on the driver's door of your vehicle.

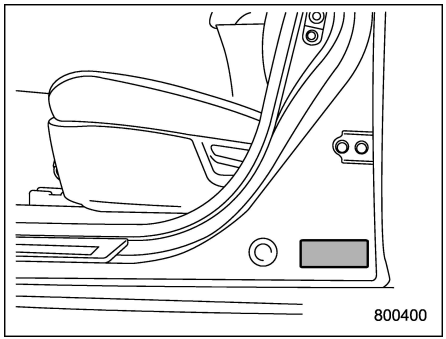

Certification label

▼ Gross Axle Weight (GAW) and Gross Axle Weight Rating (GAWR)

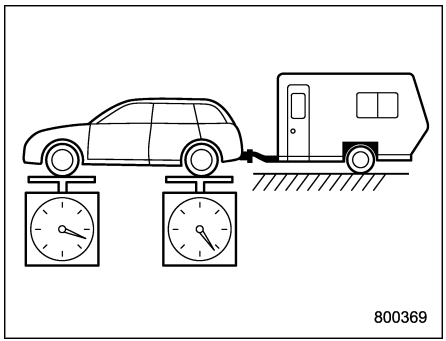

Gross Axle Weight

The total weight applied to each axle (GAW) must never exceed the Gross Axle Weight Rating (GAWR). The front and rear GAWs can be adjusted by relocating passengers and luggage inside the vehicle. The front and rear GAWR of your vehicle that are set by SUBARU are also shown on the certification label.

To check both GVWR and GAWR and to confirm that the total weight and weight distribution are within safe driving limits, you should have your vehicle and trailer weighed at a commercial weighing station.

Be sure that all cargo is firmly secured to prevent a change in weight distribution while driving.

▼ Tongue load

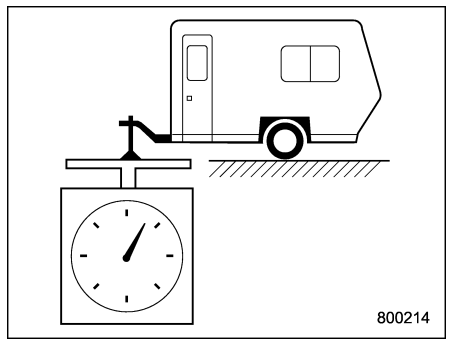

Tongue load

WARNING

If the trailer is loaded with more weight in the back of trailer's axle than in the front, the load is taken off the rear axle of the towing vehicle. This may cause the rear wheels to skid, especially during braking or when vehicle speed is reduced during cornering, resulting in oversteer, spin out and/or jackknifing.

Ensure that the trailer tongue load is from 8% to 11% of the total trailer weight and does not exceed the maximum value.

For details about the trailer tongue load, refer to "Total trailer weight" ☞P431.

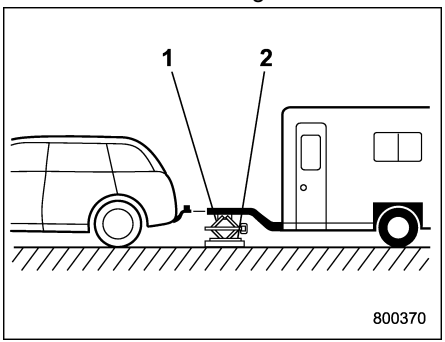

1) Jack
2) Bathroom scale

The tongue load can be weighed with a bathroom scale as shown in the following illustration. When weighing the tongue load, be sure to position the towing coupler at the height at which it would be during actual towing, using a jack as shown.

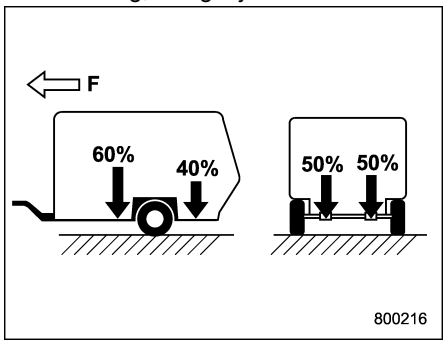

F: Front

The tongue load can be adjusted by proper distribution of the load in the trailer. Never load the trailer with more weight in the back than in the front; approximately 60% of the trailer load should be in the front and approximately 40% in the rear. Also, distribute the load as evenly as possible on both the left and right sides.

Be sure that all cargo is firmly secured to prevent a change in weight distribution while driving.

■ Trailer Hitches

WARNING

Never drill the frame or under-body of your vehicle to install a commercial trailer hitch. If you do, dangerous exhaust gas, water or mud may enter the passenger compartment through the drilled hole. Exhaust gas contains carbon monoxide, a colorless and odorless gas which is dangerous, or even lethal, if inhaled. Also, drilling the frame or under-body of your vehicle could cause deterioration of strength of your vehicle and cause corrosion around the drilled hole.

CAUTION

- **Do not modify the vehicle exhaust system, brake system, or other systems when installing a hitch or other trailer towing equipment.**
- **Do not use axle-mounted hitches as they can cause damage to the axle housing, wheel bearings, wheels or tires.**

– CONTINUED –

Do not use a trailer hitch other than genuine SUBARU trailer hitch. A genuine SUBARU hitch is available from your SUBARU dealer.

■ Connecting a Trailer

▼ Trailer brakes

⚠ WARNING

Do not directly connect your trailer's hydraulic brake system to the hydraulic brake system in your vehicle. Direct connection would cause the vehicle's brake performance to deteriorate and could lead to an accident.

Check that your trailer's brakes conform with Federal, state/province and/or other applicable regulations. Your SUBARU's brake system is not designed to be tapped into the trailer's hydraulic brake system. Please ask your SUBARU dealer and professional trailer supplier for more information about the trailer's brake system.

▼ Trailer safety chains

⚠ WARNING

Always use safety chains between your vehicle and the trailer. Towing trailer without safety chains could create a traffic safety hazard if the trailer separates from the hitch due to coupling damage or hitch ball damage.

In case the trailer hitch connector or hitch ball should break or become disconnected, the trailer could get loose and create a traffic safety hazard.

For safety, always connect the towing vehicle and trailer with trailer safety chains. Two chains should be used in total, one to the right side and the other to the left side trailer tongue. Pass the chains crossing each other under the trailer tongue to prevent the trailer from dropping onto the ground in case the trailer tongue should disconnect from the hitch ball. Allow sufficient slack in the chains taking tight turn situations into account; however, be careful not to let them drag on the ground.

▼ Side mirrors

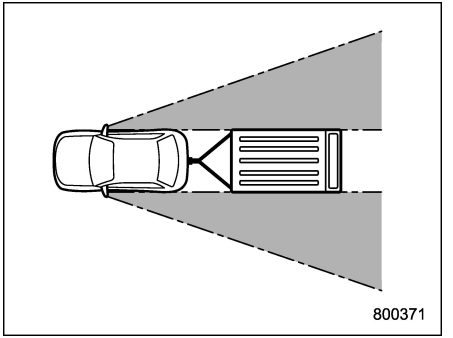

After hitching a trailer to your vehicle, check that the standard side mirrors provide a good rearward field of view without significant blind spots. If significant blind spots occur with the vehicle's standard side mirrors, use towing mirrors that conform with Federal, state/province and/or other applicable regulations.

▼ Trailer lights

⚠ CAUTION

Direct splicing or other improper connection of trailer lights may damage your vehicle's electrical system and cause a malfunction of your vehicle's lighting system.

Connection of trailer lights to your vehicle's electrical system requires modifications to the vehicle's lighting circuit to increase its capacity and accommodate wiring changes. To ensure the trailer lights are connected properly, please consult your SUBARU dealer. Check for proper operation of the turn signals and the stop lights each time you connect a trailer to your vehicle.

▼ Tires

WARNING

Never tow a trailer when the temporary spare tire is used. The temporary spare tire is not designed to sustain the towing load. Use of the temporary spare tire when towing can result in failure of the spare tire and/or less stability of the vehicle.

Make sure that all the tires on your vehicle are properly inflated. Refer to "Tires" ☞P526.

Trailer tire condition, size, load rating and proper inflation pressure should be in accordance with the trailer manufacturer's specifications.

In the event your vehicle gets a flat tire when towing a trailer, ask a commercial road service representative or professional to repair the flat tire.

If you carry a regular size spare tire in your vehicle or trailer as a precaution against getting a flat tire, be sure that the spare tire is firmly secured.

■ Trailer Towing Tips

CAUTION

- **For models equipped with the BSD (Blind Spot Detection) and RCTA (Rear Cross Traffic Alert) driving support systems, when towing a trailer, touch "BSD/RCTA" to deactivate the system. The system may not operate properly due to the blocked radar waves. For details about how to turn on/off the BSD/RCTA, refer to "Car settings" ☞P215.**
- **For models equipped with RAB (Reverse Automatic Braking) system, consult your SUBARU dealer for additional information about towing a trailer.**
- **Towing a trailer in high temperatures, or on long or steep grades, may cause the vehicle to overheat. Refer to "Engine Overheating" ☞P451.**
- **When towing a trailer, steering, stability, stopping distance and braking performance will be different when compared to normal operation. You should never drive at excessive speeds but always employ extra caution when towing a trailer. You should also keep the following tips in mind.**
- **When parking on a steep slope with a trailer attached to your vehicle, the braking power of the electronic parking brake may not be sufficient since strong braking power is needed.**

▼ Before starting out on a trip

- Check the towing regulations for trailer or caravan vehicles that vary by state/region. Failure to comply with the procedures set forth will not only compromise your safety, but will also negate your insurance coverage and/or may violate the state road and traffic acts and regulations.
- Check that the vehicle and vehicle-to-hitch mounting are in good condition. If any problems are apparent, do not tow the trailer.

– CONTINUED –

- Check that the vehicle rests horizontally with the trailer attached. If the vehicle is tipped sharply up at the front and down at the rear, check the total trailer weight, GVW, GAWs and tongue load again, then confirm that the load and its distribution are acceptable.
- Check that the tire pressures are correct.
- Check that the vehicle and trailer are connected properly. Confirm that
  - The trailer tongue is connected properly to the hitch ball.
  - The trailer lights connector is connected properly and trailer's stop lights illuminate when the vehicle's brake pedal is pressed, and that the trailer's turn signal lights flash when the vehicle's turn signal lever is operated.
  - The safety chains are connected properly.
  - All cargo in the trailer is secured safely in position.
  - The side mirrors provide a good rearward field of view without a significant blind spot.
- Sufficient time should be taken to learn the "feel" of the vehicle/trailer combination before starting out on a trip. In an area free of traffic, practice turning, stopping and backing up.

▼ Driving with a trailer

- You should allow for considerably more stopping distance when towing a trailer. Avoid sudden braking because it may result in skidding or jackknifing and loss of control.
- Avoid abrupt starts and sudden accelerations.
- Avoid uneven steering, sharp turns and rapid lane changes.
- Slow down before turning. Make a longer than normal turning radius because the trailer wheels will be closer than the vehicle wheels to the inside of the turn. In a tight turn, the trailer could hit your vehicle.
- Crosswinds will adversely affect the handling of your vehicle and trailer, causing sway. Crosswinds can be due to weather conditions or the passing of large trucks or buses. If swaying occurs, firmly grip the steering wheel and promptly begin decelerating your vehicle at a gradual pace.
- When passing other vehicles, considerable distance is required because of the added weight and length caused by attaching the trailer to your vehicle.
- Reversing the vehicle with a trailer can be difficult and requires experience. Never accelerate or steer rapidly, and grip the bottom of the steering wheel with one hand.

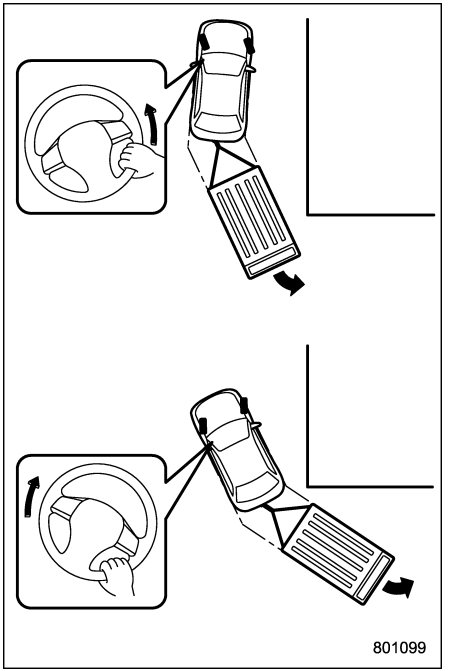

To reverse around a corner, perform the following procedure.

1. Reverse slowly and steer in the opposite direction to the way you want to turn.
2. Once the trailer begins to swing

around, straighten the steering wheel.

3. Turn the wheel in the opposite direction.

4. Steer the vehicle around to be in line with the trailer, then straighten the steering again.

- If the ABS warning light illuminates while the vehicle is in motion, stop towing the trailer and have repairs performed immediately by your nearest SUBARU dealer.

▼ Driving on grades

- Before going down a steep hill, slow down and shift into lower gear (if necessary, use 1st gear) in order to utilize the engine braking effect and prevent overheating of your vehicle's brakes. Do not make sudden downshifts.
- When driving uphill in hot weather, the air conditioner may turn off automatically to protect the engine from overheating.
- When driving uphill in hot weather, because the engine and transmission are relatively prone to overheating, pay attention to the following items.
  - Engine coolant temperature gauge
  - AT OIL TEMP warning light
- If any of the following conditions occur, immediately turn off the air conditioner and stop the vehicle in the nearest safe location. Refer to "If You Park Your Vehicle in an Emergency" ☞P440 and "Engine Overheating" ☞P451.
  - Engine coolant temperature gauge needle approaches the OVERHEAT zone. Refer to "Engine Coolant Temperature Gauge" ☞P173.
  - AT OIL TEMP warning light illuminates. Refer to "AT OIL TEMP Warning Light" ☞P180.
- Do not use the accelerator pedal to stay stationary on an uphill slope instead of using the parking brake or foot brake. That may cause the transmission fluid to overheat.

▼ Parking on a grade

Always block the wheels under both vehicle and trailer when parking. Apply the parking brake. You should not park on a hill or slope. If parking on a hill or slope cannot be avoided, you should take the following steps:

1. Apply the brakes and hold the pedal down.
2. Have someone place wheel blocks under both the vehicle and trailer wheels.
3. When the wheel blocks are in place, release the regular brakes slowly until the blocks absorb the load.
4. Apply the regular brakes and then apply the parking brake; slowly release the regular brakes.
5. Shift into "P" and shut off the engine.

9-1. If You Park Your Vehicle in an Emergency ... 440
9-2. Temporary Spare Tire ... 440
9-3. Maintenance Tools ... 441
Legacy ... 442
Outback ... 443
9-4. Flat Tires ... 444
Changing a Flat Tire ... 444
Tire Pressure Monitoring System (TPMS) (U.S. Spec. Models) ... 447
TPMS Screen (U.S. Spec. Models) ... 448
9-5. Jump Starting ... 449
How to Jump Start ... 449
9-6. Engine Overheating ... 451
If Steam Is Coming from the Engine Compartment ... 451
If No Steam Is Coming from the Engine Compartment ... 451
9-7. Towing ... 452
Towing Hook and Tie-Down Hooks/Holes ... 452
Using a Flat-Bed Truck ... 455
Towing with All Wheels on the Ground ... 455
9-8. Electronic Parking Brake – If the Electronic Parking Brake Cannot Be Released ... 456
9-9. Access Key Fob – If Access Key Fob Does Not Operate Properly ... 456
Locking and Unlocking ... 457
Switching Power Status ... 457
Starting Engine ... 457
9-10. Rear Gate (Outback) – If the Rear Gate Cannot Be Opened ... 458
9-11. Malfunctions of the Center Information Display ... 459
9-12. If Your Vehicle Is Involved in an Accident ... 461
To Restart the Engine When Involved in an Accident ... 461
Auto Lock/Unlock Operation When Involved in an Accident ... 461

9-1. If You Park Your Vehicle in an Emergency

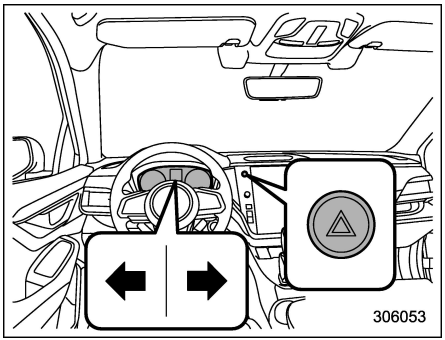

The hazard warning flasher should be used in day or night to warn other drivers when you have to park your vehicle under emergency conditions.

Avoid stopping on the road. It is best to safely pull off the road if a problem occurs.

The hazard warning flasher can be activated regardless of the ignition switch position.

Turn on the hazard warning by pressing the hazard warning flasher switch. Turn it off by pressing the switch again.

When the hazard warning flasher are flashing, the corresponding turn signal indicator will also flash.

NOTE

When the hazard warning flasher is on, the turn signals do not work.

9-2. Temporary Spare Tire

WARNING

- **Never tow a trailer when the temporary spare tire is used. The temporary spare tire is not designed to sustain the towing load. Use of the temporary spare tire when towing can result in failure of the spare tire and/or less stability of the vehicle and may lead to an accident.**
- **U.S. spec. models, when a spare tire is mounted or a wheel rim is replaced without the original pressure sensor/transmitter being transferred, the low tire pressure warning light will illuminate steadily after blinking for approximately one minute. This indicates the tire pressure monitoring system (TPMS) is unable to monitor all four road wheels. Contact your SUBARU dealer as soon as possible for tire and sensor replacement and/or system resetting.**

CAUTION

Never use any temporary spare tire other than the original. Using other sizes may result in severe mechanical damage to the drive train of your vehicle.

The temporary spare tire is stored under the under-floor storage compartment.

The temporary spare tire is smaller and lighter than a conventional tire and is designed for emergency use only. Remove the temporary spare tire and reinstall the conventional tire as soon as possible because the spare tire is designed only for temporary use.

Check the inflation pressure of the temporary spare tire periodically to keep the tire ready for use. For the correct tire pressure, refer to “Tires” ☞P526.

When using the temporary spare tire, note the following precautions.

- Do not exceed 50 mph (80 km/h).
- Do not put a tire chain on the temporary spare tire. Because of the smaller tire size, a tire chain will not fit properly.
- Do not use two or more temporary spare tires at the same time.
- Do not drive over obstacles. This tire has a smaller diameter, so road clearance is reduced.

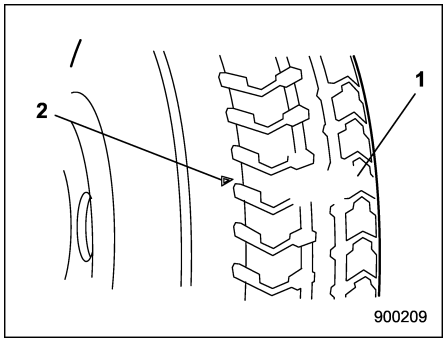

1) Tread wear indicator bar
2) Indicator location mark

- When the wear indicator appears on the tread, replace the tire.
- The temporary spare tire must be used only on a rear wheel. If a front wheel tire gets punctured, replace the wheel with a rear wheel and install the temporary spare tire in place of the removed rear wheel.

9-3. Maintenance Tools

Your vehicle is equipped with the following maintenance tools.

- Jack
- Jack handle
- Screwdriver
- Towing hook (eye bolt) (Outback)
- Wheel nut wrench
- Torque wrench (Outback)

CAUTION

The torque wrench is designed to be used only when changing the position of the crossbar. Do not use the torque wrench in other cases. Otherwise, the torque wrench may be deformed.

– CONTINUED –

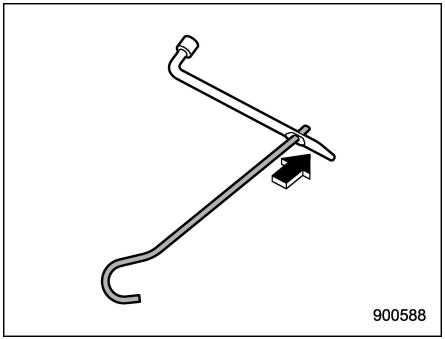

NOTE

To use the jack handle, insert the jack handle into the hole of the wheel nut wrench.

■ Legacy

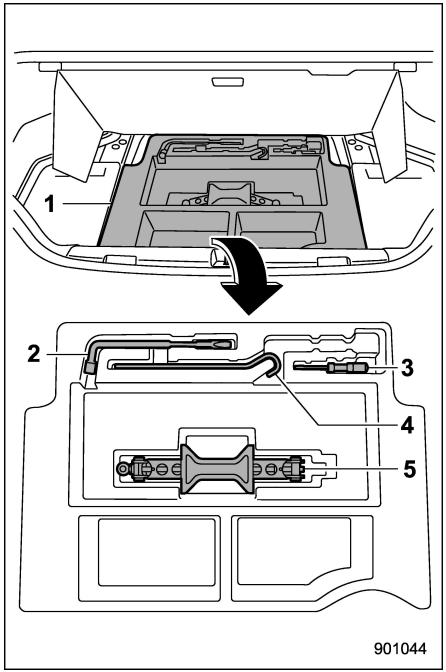

1) Under-floor storage compartment (Refer to “Under-Floor Storage Compartment” ☞P313.)
2) Wheel nut wrench
3) Screwdriver
4) Jack handle
5) Jack

The maintenance tools are stored in the under-floor storage compartment.

For the method to use the jack, refer to “Flat Tires” ☞P444.

■ Outback

▼ Type A

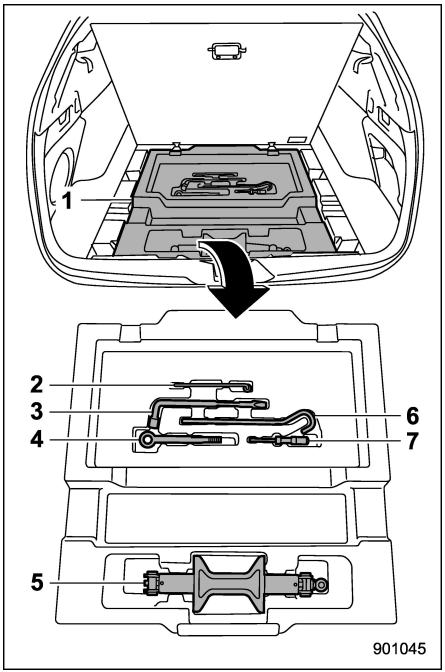

1) Under-floor storage compartment (Refer to “Under-Floor Storage Compartment” ☞P313.)
2) Torque wrench for roof rails
3) Wheel nut wrench
4) Towing hook (eye bolt)
5) Jack
6) Jack handle
7) Screwdriver

The maintenance tools are stored in the under-floor storage compartment.

For the method to use the jack, refer to “Flat Tires” ☞P444.

▼ Type B

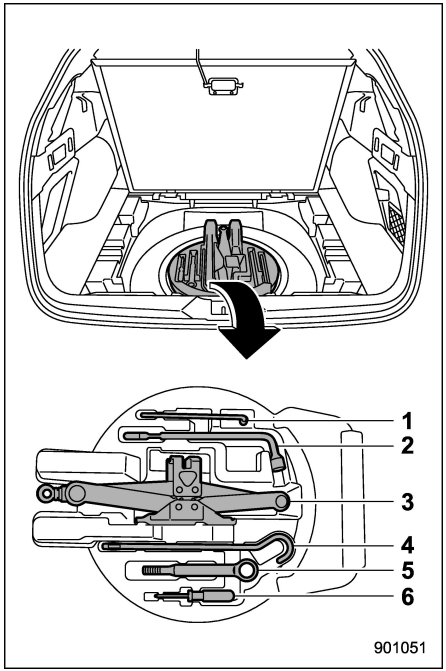

1) Torque wrench for roof rails
2) Wheel nut wrench
3) Jack
4) Jack handle
5) Towing hook (eye bolt)
6) Screwdriver

– CONTINUED –

For the method to use the jack, refer to “Flat Tires” ☞P444.

9-4. Flat Tires

If you have a flat tire while driving, never brake suddenly; keep driving straight ahead while gradually reducing speed. Then slowly pull off the road to a safe place.

■ Changing a Flat Tire

⚠ WARNING

- **Use only the jack and the jack handle provided with your vehicle. The jack supplied with the vehicle is designed only for changing a tire. Never get under the vehicle while supporting the vehicle with this jack.**
- **Do not jack up the vehicle on an incline or a loose road surface. The jack can come out of the jacking point or sink into the ground and this can result in serious injury or death.**
- **Before jacking up the vehicle, be sure that there are no occupants or cargo on board.**
- **Do not jack up the vehicle with an object on or underneath the jack. The jack can be unstable and this can result in a severe accident.**
- **Always turn off the engine before raising the flat tire off the ground using the jack. Never swing or push the vehicle supported with the jack. The jack can come out of the jacking point due to a jolt and this can result in serious injury or death.**
- **All passengers must exit the vehicle before you raise it with the jack. Raising the vehicle with someone inside of it could result in serious injury or death.**
- **Do not start the vehicle while it is supported by the jack. Doing so could result in serious injury or death.**

⚠ CAUTION

Do not hit and bend the disc rotor backing plate when removing and installing the tire. A bent backing plate may scrape against the disc rotor and cause noise while the vehicle is in motion.

NOTE

Contact a SUBARU dealer when jacking up the vehicle using a garage jack.

1. Park on a hard, level surface, whenever possible, then stop the engine.
2. Apply the parking brake and shift the select lever in the “P” (Park) position.
3. Turn on the hazard warning flasher and unload all occupants and luggage from the vehicle.

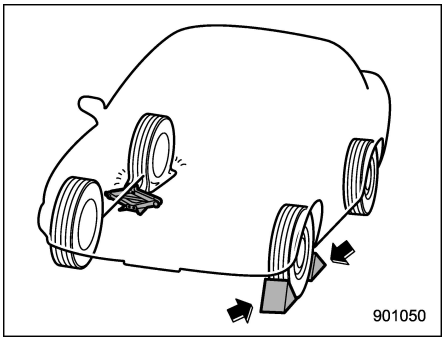

4. Put wheel blocks at the front and rear of the tire diagonally opposite the flat tire.
5. Take out the jack, jack handle and wheel nut wrench.

The tools and the spare tire are stored under the floor of the trunk (Legacy) or the cargo area (Outback). Refer to “Maintenance Tools” ☞P441.

NOTE

- **Make sure that the jack is well lubricated before using it.**
- **To take out the tools and spare tire, store the cargo area cover to the original position and open the under-floor storage. Refer to “Under-Floor Storage Compartment” ☞P313.**

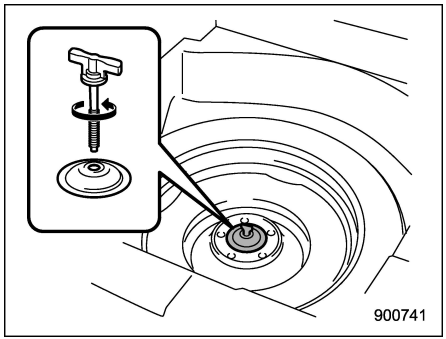

6. Take out the under-floor storage compartment and turn the attaching bolt counterclockwise, then take the spare tire out.

NOTE

Carefully read “Temporary Spare Tire” ☞P440 and strictly follow the instructions.

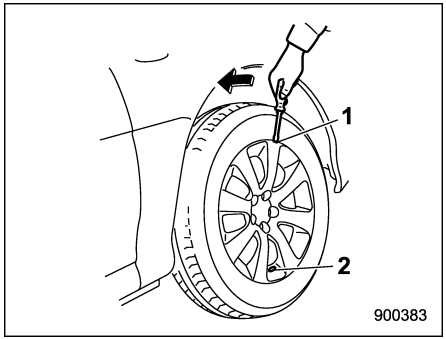

1) Notch
2) Valve hole

7. If your vehicle has wheel covers, insert a flat-head screwdriver into the notch on the opposite side of the valve hole and pry the wheel cover to remove it.

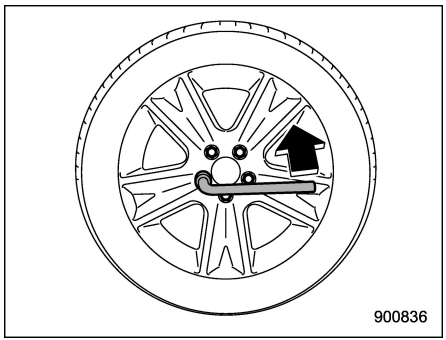

– CONTINUED –

8. Loosen the wheel nuts using the wheel nut wrench but do not remove the nuts.

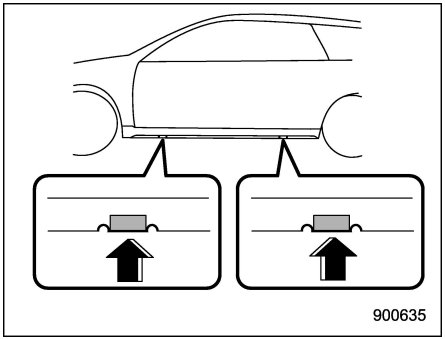

9. Place the jack under the side sill at the front or rear jack-up point closest to the flat tire.

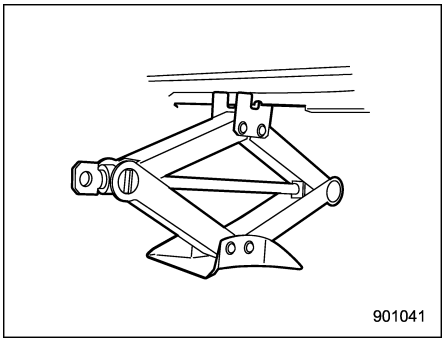

Turn the jackscrew by hand until the jack head engages firmly into the jack-up point.

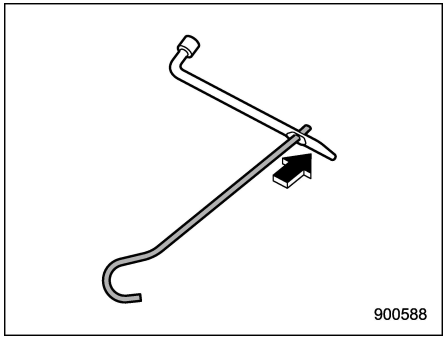

10. Insert the jack handle into the hole of the wheel nut wrench.

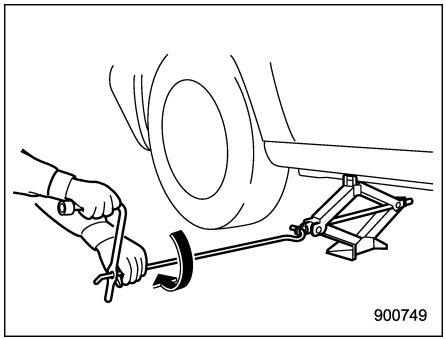

11. Insert the jack handle into the jack-screw, and turn the handle until the tire clears the ground. Do not raise the vehicle higher than necessary.

12. Remove the wheel nuts and the flat tire.

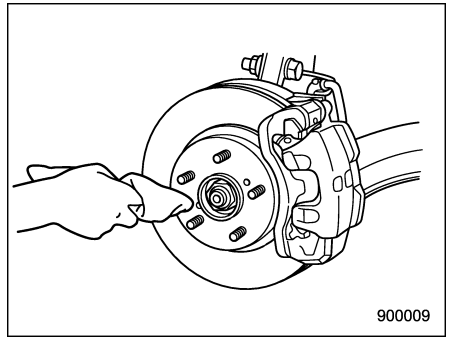

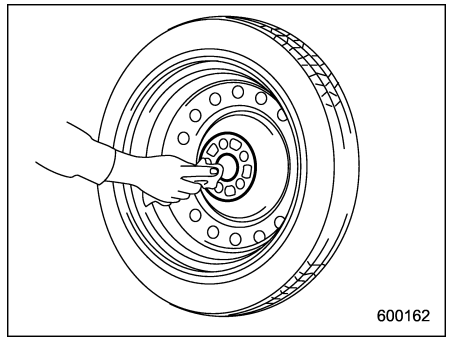

13. Before putting the spare tire on, clean the mounting surface of the wheel and hub with a cloth.

14. Put on the spare tire. Replace the wheel nuts. Tighten them by hand.

WARNING

Do not use oil or grease on the wheel studs or nuts when the spare tire is installed. This could cause the nuts to become loose and lead to an accident.

15. Turn the jack handle counterclockwise to lower the vehicle.

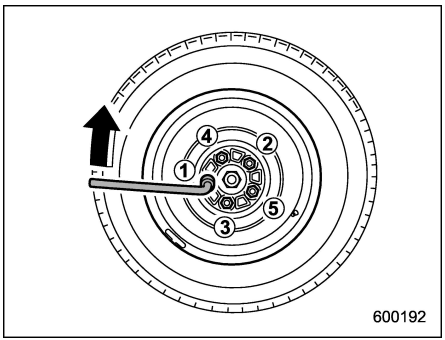

16. Use the wheel nut wrench to securely tighten the wheel nuts to the specified torque, following the tightening order in the illustration.

For the wheel nut tightening torque, refer to “Tires” ☞P526. Never use your foot on the wheel nut wrench or a pipe extension on the wrench because you may exceed the specified torque. Have the wheel nut torque checked at the nearest automotive service facility.

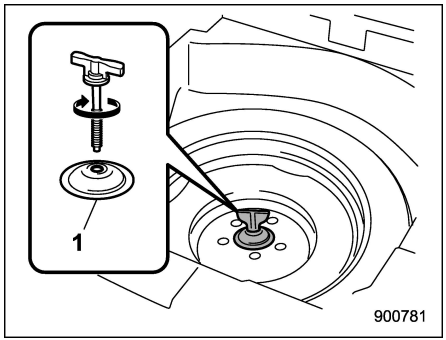

1) Support holder

17. Store the flat tire in the spare tire compartment. Install with the support holder facing upward and secure the flat tire by firmly tightening the attaching bolt.

NOTE

If you cannot fix the flat tire firmly, try turning the support holder upside down.

18. Store the jack, jack handle and wheel nut wrench in their storage locations.

WARNING

Never place a tire or tire changing tools in the passenger compartment after changing wheels. In a sudden stop or collision, loose equipment could strike occupants and cause injury. Store the tire and all tools in the proper place.

■ Tire Pressure Monitoring System (TPMS) (U.S. Spec. Models)

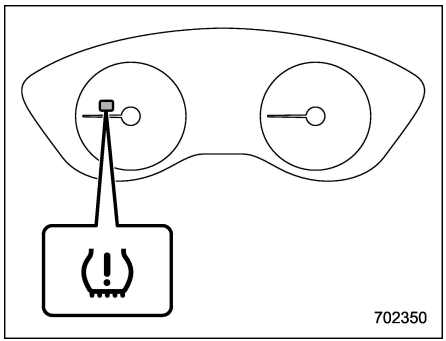

Low tire pressure warning light

The tire pressure monitoring system provides the driver with the warning message indicated by sending a signal from a sensor that is installed in each wheel when

– CONTINUED –

tire pressure is severely low.

The tire pressure monitoring system will activate only when the vehicle is driven. Also, this system may not react immediately to a sudden drop in tire pressure (for example, a blow-out caused running over a sharp object).

WARNING

- **If the low tire pressure warning light illuminates while driving, never brake suddenly. Instead, perform the following procedure. Otherwise an accident involving serious vehicle damage and serious personal injury could occur.**
  (1) Keep driving straight ahead while gradually reducing speed.
  (2) Slowly pull off the road to a safe place.
  (3) Check the pressure for all four tires and adjust the pressure to the COLD tire pressure shown on the vehicle placard on the door pillar on the driver's side.

  If this light still illuminates while driving after adjusting the tire pressure, a tire may have significant damage and a fast leak that causes the tire to lose air rapidly. If you have a flat tire, replace it with a spare tire as soon as possible.
- **When a spare tire is mounted or a wheel rim is replaced without the original pressure sensor/transmitter being transferred, the low tire pressure warning light will illuminate steadily after blinking for approximately one minute. This indicates the TPMS is unable to monitor all four road wheels. Contact your SUBARU dealer as soon as possible for tire and sensor replacement and/or system resetting.**
- **When a tire is repaired with liquid sealant, the tire pressure warning valve and transmitter may not operate properly. If a liquid sealant is used, contact your nearest SUBARU dealer or other qualified service shop as soon as possible. Make sure to replace the tire pressure warning valve and transmitter when replacing the tire. You may reuse the wheel if there is no damage to it and if the sealant residue is properly cleaned off.**

  If the light illuminates steadily after blinking for approximately one minute, promptly contact a SUBARU dealer to have the system inspected.

■ TPMS Screen (U.S. Spec. Models)

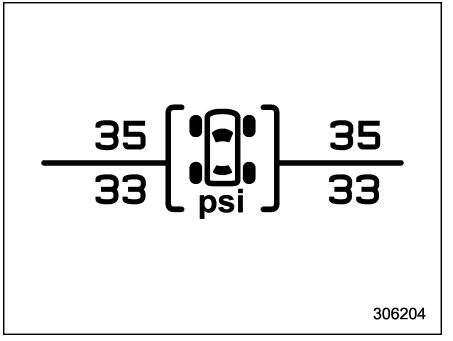

This screen displays each tire pressure. Refer to "Basic Screens" ☞P201.

9-5. Jump Starting

WARNING

- **Battery fluid is SULFURIC ACID. Do not let it come in contact with the eyes, skin, clothing or the vehicle.**

  If battery fluid gets on you, thoroughly flush the exposed area with water immediately. Get medical help if the fluid has entered your eyes.

  If battery fluid is accidentally swallowed, immediately drink a large amount of milk or water, and obtain immediate medical help.

  Keep everyone including children away from the battery.
- **The gas generated by a battery explodes if a flame or spark is brought near it. Do not smoke or light a match while jump starting.**
- **Never attempt jump starting if the discharged battery is frozen. It could cause the battery to burst or explode.**
- **Whenever working on or around a battery, always wear suitable eye protectors, and remove metal objects such as rings, bands or other metal jewelry.**
- **Be sure the jumper cables and clamps on them do not have loose or missing insulation.**
- **Do not jump start unless cables in suitable condition are available.**
- **A running engine can be dangerous. Keep your fingers, hands, clothing, hair and tools away from the cooling fan, belts and any other moving engine parts. Removing rings, watches and ties is advisable.**
- **Jump starting is dangerous if it is done incorrectly. If you are unsure about the proper procedure for jump starting, consult a competent mechanic.**

When your vehicle does not start due to a run down (discharged) battery, the vehicle may be jump started by connecting your battery to another battery (called the booster battery) with jumper cables.

■ How to Jump Start

1. Make sure the booster battery is 12 volts and the negative terminal is grounded.
2. If the booster battery is in another vehicle, do not let the two vehicles touch.
3. Turn off all unnecessary lights and accessories.
4. Connect the jumper cables exactly in the sequence illustrated.

– CONTINUED –

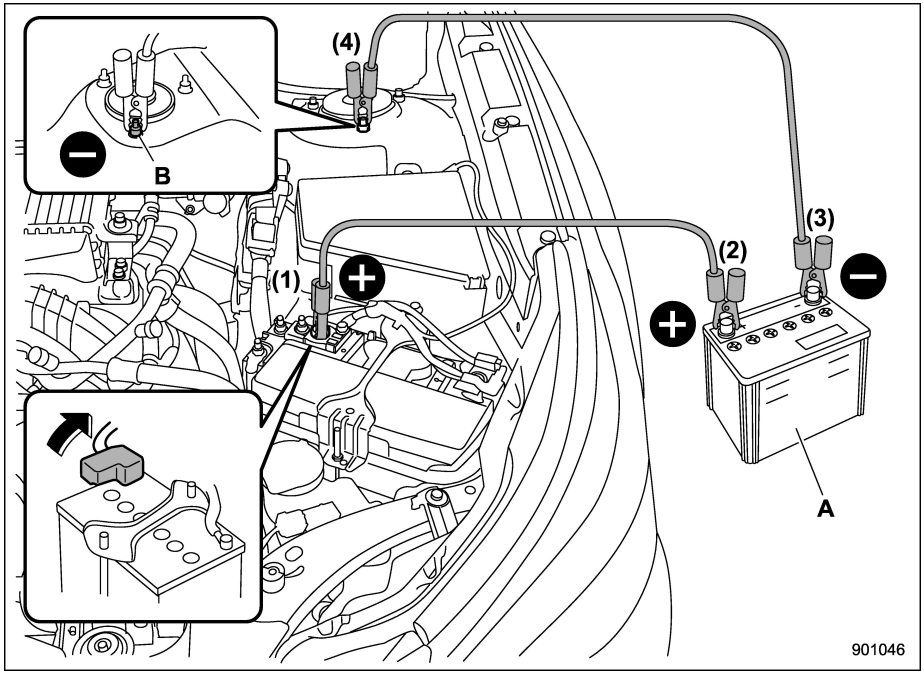

A) Booster battery
B) Strut mounting nut
1) Connect one jumper cable to the positive (+) terminal on the discharged battery.
2) Connect the other end of the jumper cable to the positive (+) terminal of the booster battery.
3) Connect one end of the other cable to the negative (−) terminal of the booster battery.
4) Connect the other end of the cable to the strut mounting nut.

Make sure that the cables are not near any moving parts and that the cable clamps are not in contact with any other metal.

5. Start the engine of the vehicle with the booster battery and run it at moderate speed. Then start the engine of the vehicle that has the discharged battery.

6. When finished, carefully disconnect the cables in exactly the reverse order.

9-6. Engine Overheating

WARNING

Never attempt to remove the radiator cap until the engine has been shut off and has fully cooled down. When the engine is hot, the coolant is under pressure. Removing the cap while the engine is still hot could release a spray of boiling hot coolant, which could burn you very seriously.

CAUTION

If the engine overheats, the engine speed or the vehicle speed may be reduced. Stop the vehicle in a safe place immediately.

■ If Steam Is Coming from the Engine Compartment

Turn off the engine and get everyone away from the vehicle until it cools down.

■ If No Steam Is Coming from the Engine Compartment

NOTE

For details about how to check the coolant level or how to add coolant, refer to "Engine Coolant" ☞P485.

1. Keep the engine running at idling speed.
2. Open the hood to ventilate the engine compartment. Refer to "Engine Hood" ☞P477.

Confirm that the cooling fan is turning. If the fan is not turning, immediately turn off the engine and contact your authorized dealer for repair.

3. After the engine coolant temperature has dropped, turn off the engine.

If the temperature gauge stays in the overheated zone, turn off the engine.

4. After the engine has fully cooled down, check the coolant level in the reserve tank.

If the coolant level is below the "LOW" mark, add coolant up to the "FULL" mark.

5. If there is no coolant in the reserve tank, add coolant to the reserve tank. Then remove the radiator cap and fill the radiator with coolant.

If you remove the radiator cap from a hot radiator, first wrap a thick cloth around the radiator cap, then turn the cap counter-clockwise slowly without pressing down until it stops. Release the pressure from the radiator. After the pressure has been fully released, remove the cap by pressing down and turning it.

9-7. Towing

WARNING

Never tow AWD vehicles with the front wheels raised off the ground while the rear wheels are on the ground, or with the rear wheels raised off the ground while the front wheels are on the ground. This will cause the vehicle to spin away due to the operation or deterioration of the center differential.

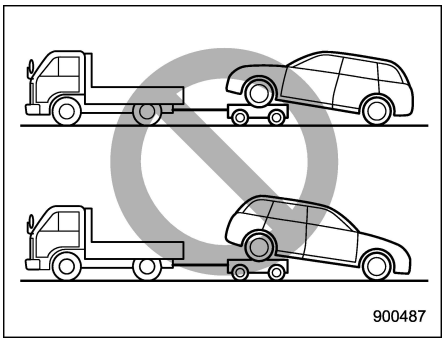

If towing is necessary, SUBARU recommends it be done by your SUBARU dealer or a commercial towing service.

■ Towing Hook and Tie-Down Hooks/Holes

The towing hooks should be used only in an emergency.

A towing hook is supplied with Outback only. Legacy is not supplied with a towing hook (it is available as an accessory). On Legacy, the towing access cover is on the rear bumper only.

SUBARU recommends towing be done by your SUBARU dealer or a commercial towing service.

CAUTION

- **Use only the specified towing hook and tie-down hooks/holes. Never use suspension parts or other parts of the body for towing or tie-down purposes.**
- **Never use the tie-down hole closest to the muffler under the vehicle for towing purposes.**

Front towing hook (Outback):

1. Take out the screwdriver, towing hook, wheel nut wrench and jack handle from the under-floor storage compartment.

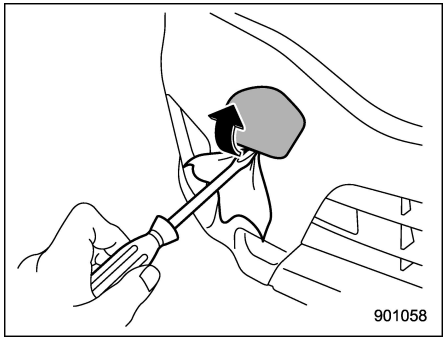

2. Pry off the towing access cover on the front bumper using a screwdriver, and you will find a threaded hole for attaching the towing hook.

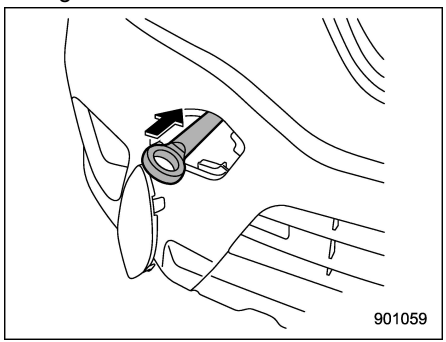

3. Screw the towing hook into the threaded hole until the threads can no

longer be seen.

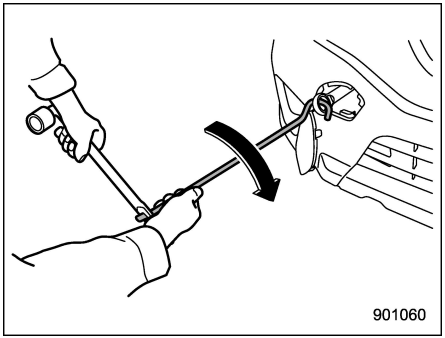

4. Tighten the towing hook securely using the jack handle and wheel nut wrench.

After towing, remove the towing hook from the vehicle and stow it in the under-floor storage compartment.
Fit the towing hook cover on the bumper.

WARNING

- **Do not use the towing hook for purposes other than towing your vehicle.**
- **Be sure to remove the towing hook after towing. Leaving the towing hook mounted on the vehicle could interfere with proper operation of the SRS airbag system in a frontal collision.**

CAUTION

To prevent deformation to the bumper and the towing hook, do not apply excessive load to the towing hook.

Rear towing hook:

1. Take out the screwdriver, towing hook, wheel nut wrench and jack handle from the under-floor storage compartment.

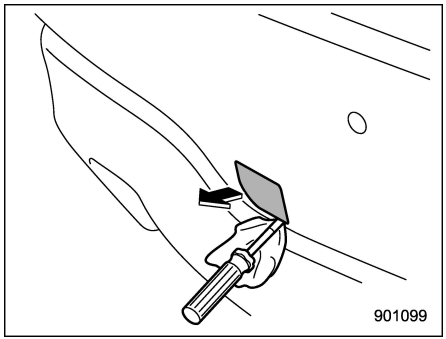

Legacy

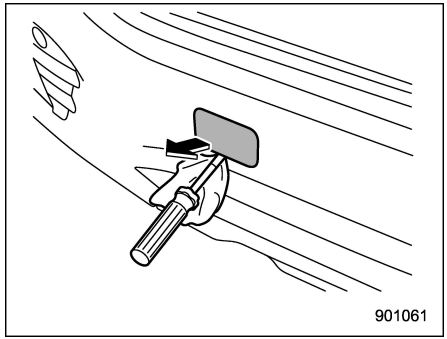

Outback

2. Pry off the cover on the rear bumper using a screwdriver, and you will find a threaded hole for attaching the towing hook.

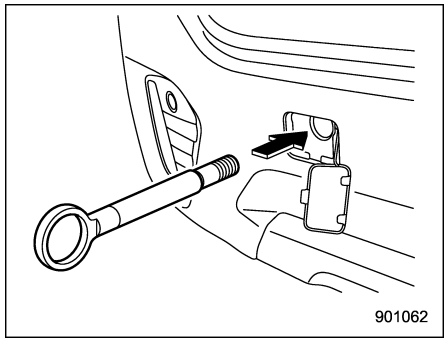

3. Screw the towing hook into the

– CONTINUED –

threaded hole until its thread can no longer be seen.

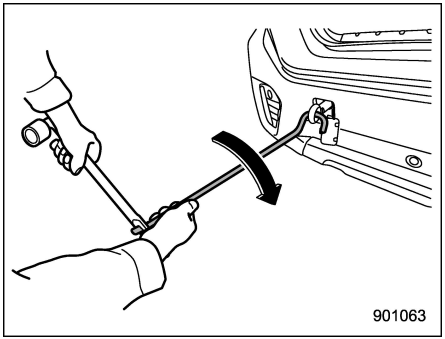

4. Tighten the towing hook securely using the jack handle and wheel nut wrench.

After towing, remove the towing hook from the vehicle and stow it in the under-floor storage compartment.

Fit the towing hook cover on the bumper.

WARNING

- **Do not use the towing hook for purposes other than towing your vehicle.**
- **Be sure to remove the towing hook after towing. Leaving the towing hook mounted on the vehicle could interfere with proper operation of the fuel pump shut off function when the vehicle is struck from behind.**

CAUTION

To prevent deformation to the bumper and the towing hook, do not apply excessive load to the towing hook.

Front tie-down hooks:

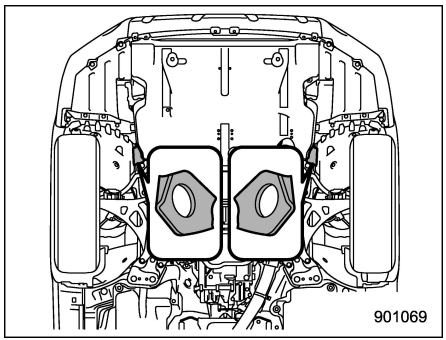

The front tie-down hooks are located between each of the front tires and the front bumper.

Front Tie-down Hooks are for tying down the vehicle. They are not for towing.

Rear tie-down holes:

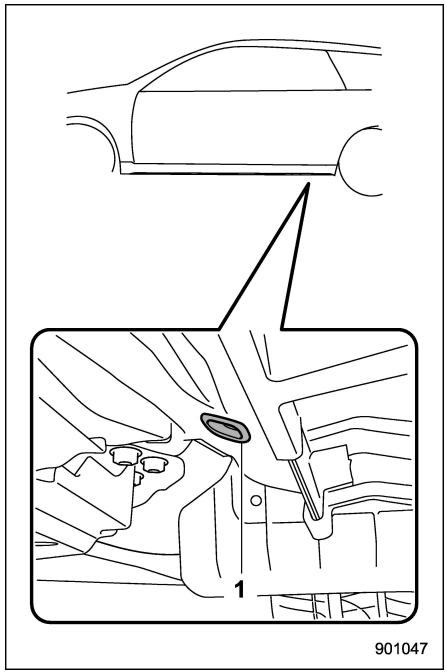

1) Rear tie-down hole

The rear tie-down holes are located near each of the jack-up reinforcements.

There is a plug in each rear tie-down hole. To use the rear tie-down holes, remove the

plugs. After using the rear tie-down holes, return the plugs to their original places.

WARNING

Use the rear tie-down holes only for downward anchoring. If they are used to anchor the vehicle in any other direction, cables may slip out of the holes, possibly causing a dangerous situation.

■ Using a Flat-Bed Truck

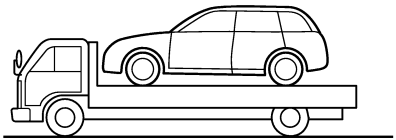

900488

This is the best way to transport your vehicle. Use the following procedures to ensure safe transportation.

1. Shift the select lever into the “P” position.
2. Apply the parking brake firmly.
3. Secure the vehicle onto the carrier properly with safety chains. Each safety chain should be equally tightened and care must be taken not to pull the chains so tightly that the suspension bottoms out.

CAUTION

Transport by flat-bed truck may cause the headlights to become misaligned. In such a case, have the headlight alignment checked by a SUBARU dealer after transporting the vehicle by flat-bed truck.

■ Towing with All Wheels on the Ground

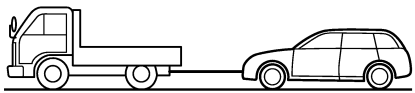

900489

WARNING

- **Never turn the ignition switch to the “LOCK”/“OFF” position while the vehicle is being towed because the steering wheel and the direction of the wheels will be locked.**
- **Remember that the brake booster and power steering do not function when the engine is not running. Because the engine is turned off, it will take greater effort to operate the brake pedal and steering wheel.**

CAUTION

- **If transmission failure occurs, transport your vehicle on a flat-bed truck.**
- **Sometime damaged vehicles cannot be towed because of their damaged condition. In that case, use a flat-bed truck for transportation.**
- **The traveling speed must be limited to less than 20 mph (32 km/h) and the traveling distance to less than 31 miles (50 km). For greater speeds and distances,**

– CONTINUED –

transport your vehicle on a flat-bed truck.

- **Use a flat-bed truck if there are long distance downgrades or steep slopes. However, do not apply the brake pedal for a long time because the engine braking will not work while towing. Doing so could overheat the brake.**
- **Drive carefully and do not make an impact on the towing rope by suddenly starting.**
- **Use a specific towing rope for towing. If wire ropes and metal chains are needed to be used for towing, wrap the contact portion of the bumper with cloth to protect it from damage.**

1. Release the parking brake and put the transmission in neutral.
2. The ignition switch should be in the "ON" position while the vehicle is being towed.
3. Take up slack in the towline slowly to prevent damage to the vehicle.

9-8. Electronic Parking Brake – If the Electronic Parking Brake Cannot Be Released

Contact your SUBARU dealer and have your SUBARU dealer release the electronic parking brake.

9-9. Access Key Fob – If Access Key Fob Does Not Operate Properly

CAUTION

Keep metallic objects, magnetic sources and signal transmitters away from the area between the access key fob and the push-button ignition switch. They may interfere with the communication between the access key fob and the push-button ignition switch.

The following functions may be inoperable because of strong radio signals in the surrounding area or a low battery condition of the access key fob.

- Locking/unlocking doors including rear gate
- Switching power status
- Starting engine

In such cases, perform the following procedure. When the battery of the access key fob is discharged, replace it with a new one. Refer to "Replacing Battery of Access Key Fob" ☞P515.

■ Locking and Unlocking

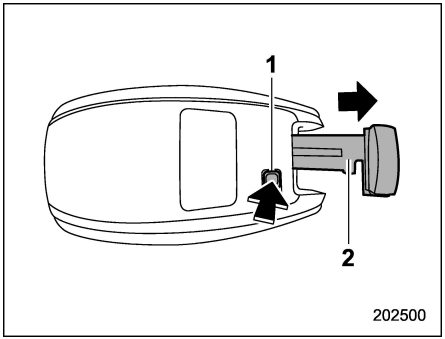

1) Release button
2) Emergency key

While pressing the release button of the access key fob, take out the emergency key.

Lock or unlock the driver's door with the emergency key in the procedure described in "Locking and Unlocking from the Outside" ☞P136.

NOTE

After locking or unlocking, be sure to attach the emergency key back to the access key fob.

■ Switching Power Status

1. Apply the parking brake.
2. Shift the select lever into the "P" position.
3. Depress the brake pedal.

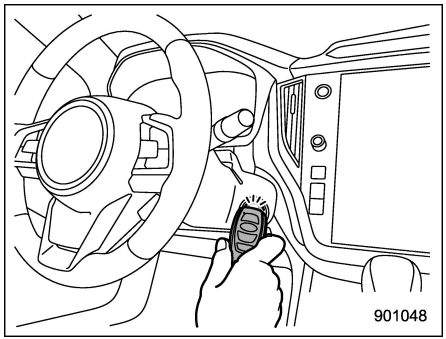

4. Hold the access key fob with the buttons facing you, and touch the push-button ignition switch with it.

When the communication between the access key fob and the vehicle is completed, a chime (ding) will sound. At the same time, the status of the push-button ignition switch changes to either of the following.

- When the keyless access with push-button start system is deactivated: "ACC"
- Under other conditions: "ON"

5. When the keyless access with push-button start system is deactivated, press the push-button ignition switch with the brake pedal released. The status of the push-button ignition switch then changes to "ON".

NOTE

If the power does not switch even though the above procedure was followed precisely, contact your SUBARU dealer.

■ Starting Engine

1. Apply the parking brake.
2. Shift the select lever into the "P" position.
3. Depress the brake pedal.

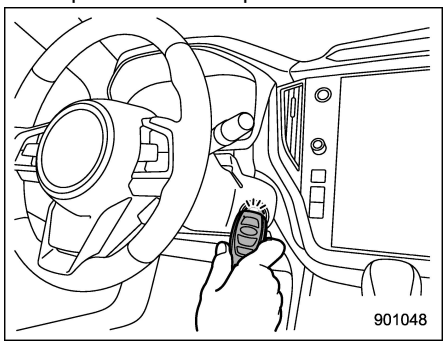

– CONTINUED –

4. Hold the access key fob with the buttons facing you, and touch the push-button ignition switch with it.

When the communication between the access key fob and the vehicle is completed, a chime (ding) will sound. At the same time, the push-button ignition switch turns to the “ACC” or “ON” position.

5. After the push-button ignition switch turns to the “ACC” or “ON” position, while depressing the brake pedal, press the push-button ignition switch.

NOTE

If the engine does not start even though the above procedure was followed precisely, contact your SUBARU dealer.

9-10. Rear Gate (Outback) – If the Rear Gate Cannot Be Opened

In the event that you cannot open the rear gate by pressing the rear gate opener button (all models) or using the power rear gate (if equipped), you can open it from inside the cargo area.

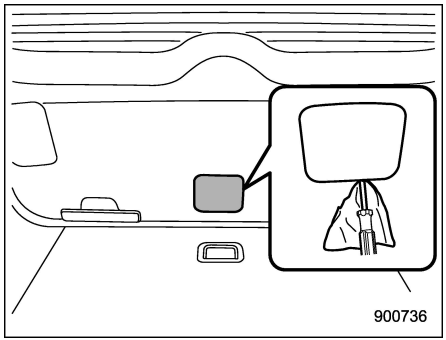

1. Remove the access cover at the bottom-center of the rear gate trim using flat-head screwdriver.

CAUTION

Never operate the rear gate lock release lever with your fingers because doing so may cause an injury. Always use a flat-head screwdriver or a similar tool.

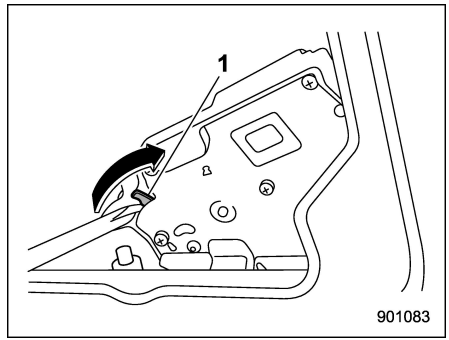

Models without power rear gate

1) Rear gate lock release lever

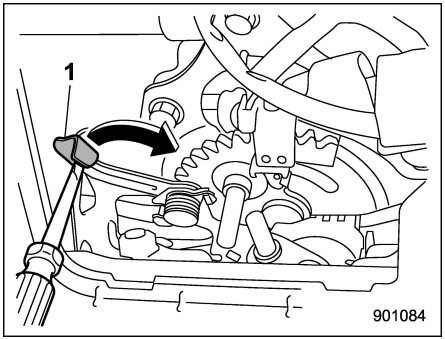

Models with power rear gate
1) Rear gate lock release lever

2. Turn the rear gate lock release lever to the right position using a flat-head screwdriver or a similar tool. Then the rear gate will open.

9-11. Malfunctions of the Center Information Display

If the following screens are displayed, temporary errors or malfunctions may occur in the center information display.

If they are only temporary errors, the following procedure may help to eliminate them.

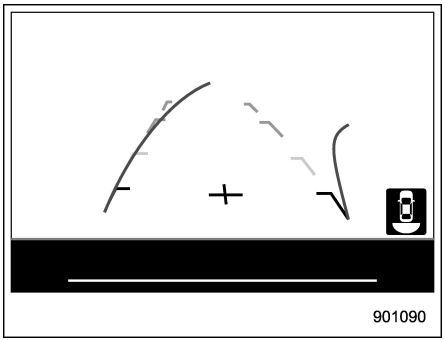

Shutting down the screen

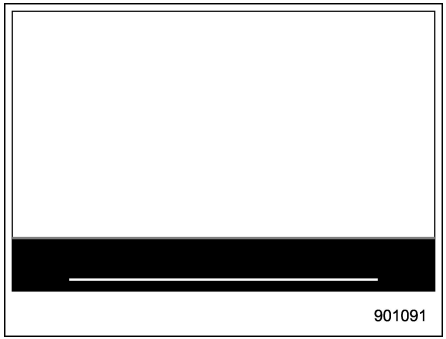

Freezing the screen

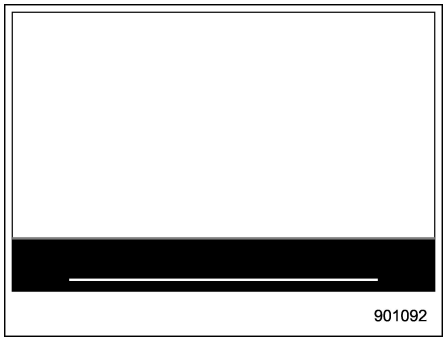

Blacking out the screen

– CONTINUED –

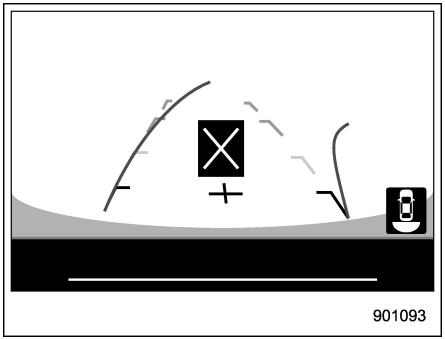

Error A

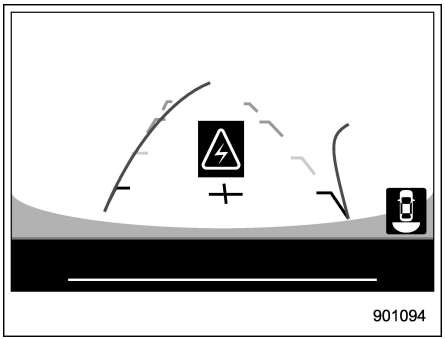

Error B

1. Park the vehicle in a safe place.
2. Turn the ignition switch once to the “LOCK/OFF” position, then start the engine.

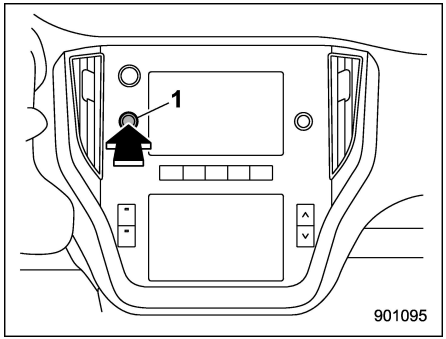

1) Volume button (dual 7.0-inch display models)

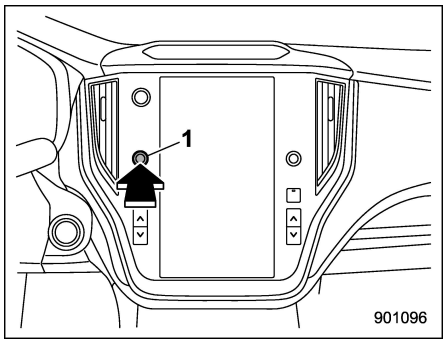

1) Volume button (11.6-inch display models)

3. If the center information display cannot be recovered even though the engine has been restarted, press and hold the volume button for more than 10 seconds. The center information display will start up again.
4. If the center information display is not recovered by restarting it, contact your SUBARU dealer.

9-12. If Your Vehicle Is Involved in an Accident

■ To Restart the Engine When Involved in an Accident

CAUTION

If your vehicle is involved in an accident, be sure to inspect the ground under the vehicle before restarting the engine. If you find that fuel has leaked on the ground, do not try to restart the engine. The fuel system has been damaged and is in need of repair. Immediately contact the nearest automotive service facility. We recommend that you consult your SUBARU dealer.

Your vehicle has a fuel pump shut off system. When the vehicle sustains an impact in an accident, etc., the fuel pump shut off system stops supplying the fuel in order to minimize fuel leakage.

Perform the following procedures to restart the engine after the system is activated.

Models without "keyless access with push-button start system":

1. Turn the ignition switch to the "LOCK" or "ACC" position.
2. Restart the engine.

Models with "keyless access with push-button start system":

1. Turn the push-button ignition switch to the "ACC" or "OFF" position.
2. Restart the engine.

■ Auto Lock/Unlock Operation When Involved in an Accident

When the auto lock/unlock function is ON, all the doors will be locked automatically while driving. For further details, refer to "Automatic Door Locking/Unlocking" ☞P138.

When the vehicle sustains a strong impact which may trigger the airbags to deploy, the door locks may be unlocked automatically to enable emergency escape. Generally, an impact sustained from a rear end collision does not trigger the airbags to deploy. However if the impact is strong enough to deploy the airbags, it can also trigger the unlocking function.

Under such circumstance, the auto unlock/lock function will be suspended and the doors will remain unlocked.

Confirm the safety of the surroundings first and carry out the following to retrieve the auto door lock function.

Models without "keyless access with push-button start system":

1. Turn the ignition switch to the "LOCK" position.
2. Turn the ignition switch to the "ON" position.

Models with "keyless access with push-button start system":

1. Turn the push-button ignition switch to the "OFF" position.
2. Turn the push-button ignition switch to the "ON" position.

NOTE

Depending on the severity of the impact, the emergency unlocking may not function.

CAUTION

If the following occur, there may be a malfunction in the system.

Have the system inspected by a SUBARU dealer.

- **The doors unlock automatically while driving.**
- **With all doors shut, the doors unlock when pressing the lock side of the power door locking switch.**
- **The auto door lock function does not operate.**

Appearance Care

10-1. Exterior Care 464
Washing 464
Waxing and Polishing 465
Cleaning Alloy Wheels 465
10-2. Corrosion Protection 466
Most Common Causes of Corrosion 466
To Help Prevent Corrosion 466
10-3. Cleaning the Interior 467
Seat Fabric Material 467
Leather Seat Materials 467
Synthetic Leather Upholstery 468
Instrument Panel, Console Panel, Switches, Combination Meter, and Other Plastic Surface 468
Center Information Display 468

10-1. Exterior Care

■ Washing

⚠ CAUTION

- **When washing the vehicle, the brakes may get wet. As a result, the brake stopping distance will be longer. To dry the brakes, drive the vehicle at a safe speed while lightly pressing the brake pedal to heat up the brakes.**
- **Do not wash the engine compartment and areas adjacent to it. If water enters the engine air intake or electrical parts, it will cause engine trouble or a malfunction of the power steering.**
- **When washing inner fenders, underbody, bumpers and protruding objects such as exhaust pipes and exhaust finishers, be careful to prevent injuries from contacting sharp ends.**
- **Do not use any organic solvents when washing the surface of the bulb assembly cover. However, if a detergent with organic solvents is used to wash the cover surface, completely rinse off the detergent with water. Otherwise, the cover surface may be damaged.**
- **Outback: Since your vehicle is equipped with a rear wiper, automatic car-wash brushes could become tangled around it, damaging the wiper arm and other components. Ask the automatic car-wash operator not to let the brushes touch the wiper arm or to fix the wiper arm on the rear window glass with adhesive tape before operating the machine.**

NOTE

When having your vehicle washed in an automatic car wash, make sure beforehand that the car wash is of suitable type.

The best way to preserve your vehicle's beauty is frequent washing. Wash the vehicle at least once a month to avoid contamination by road grime.

Wash dirt off with a wet sponge and plenty of lukewarm or cold water. Do not wash the vehicle with hot water and in direct sunlight.

Salt, chemicals, insects, tar, soot, tree sap, and bird droppings should be washed off by using a light detergent, as required. If you use a light detergent, make certain that it is a neutral detergent. Do not use strong soap or chemical detergents. All cleaning agents should be promptly flushed from the surface and not allowed to dry there. Rinse the vehicle thoroughly with plenty of lukewarm water. Wipe the remaining water off with a chamois or soft cloth. Wear rubber gloves and use a hand brush when washing down underbody, inner fenders and suspension to effectively remove mud and dirt off.

▼ Washing the underbody

Chemicals, salts and gravel used for deicing road surfaces are extremely corrosive, accelerating the corrosion of underbody components, such as the exhaust system, fuel and brake lines, brake cables, floor pan and fenders, and suspension.

Thoroughly flush the underbody and inside of the fenders with lukewarm or cold water at frequent intervals to reduce the harmful effects of such agents.

Mud and sand adhering to the underbody components may accelerate their corrosion.

After driving off-road or on muddy or sandy roads, wash the mud and sand off the underbody.

Carefully flush the suspension and axle parts, as they are particularly prone to mud

and sand buildup. Do not use a sharp-edged tool to remove caked mud.

CAUTION

- **Be careful not to damage brake hoses, sensor harnesses, and other parts when washing suspension components.**
- **Be careful not to flush the engine bottom for a long time. It may cause damage of some electrical parts.**

▼ Using a warm water washer

- Keep a good distance of 12 in (30 cm) or more between the washer nozzle and the vehicle.
- Do not wash the same area continuously.
- If a stain will not come out easily, wash by hand. Some warm water washers are of the high temperature, high pressure type, and they can damage or deform the resin parts such as mouldings, or cause water to leak into the vehicle.

■ Waxing and Polishing

Always wash and dry the vehicle before waxing and polishing.

Use a good quality polish and wax and apply them according to the manufacturer's instructions. Wax or polish when the painted surface is cool.

Be sure to polish and wax the chrome trim, as well as the painted surfaces. Loss of wax on a painted surface leads to loss of the original luster and also quickens the deterioration of the surface. It is recommended that a coat of wax be applied at least once a month, or whenever the surface no longer repels water.

If the appearance of the paint has diminished to the point where the luster or tone cannot be restored, lightly polish the surface with a fine-grained compound. Never polish just the affected area, but include the surrounding area as well. Always polish in only one direction. A No. 2000 grain compound is recommended. Never use a coarse-grained compound. Coarser grained compounds have a smaller grain-size number and could damage the paint. After polishing with a compound, coat with wax to restore the original luster. Frequent polishing with a compound or an incorrect polishing technique will result in removing the paint layer and exposing the undercoat. When in doubt, it is always best to contact your SUBARU dealer or an auto paint specialist.

CAUTION

Do not use any agents with organic solvents on the surface of the bulb assembly cover. However, if a polish or wax with organic solvents is applied to the cover surface, completely wipe off the polish or wax. Otherwise, the cover surface may be damaged.

NOTE

Be careful not to block the windshield washer nozzles with wax when waxing the vehicle.

■ Cleaning Alloy Wheels

- Promptly wipe the alloy wheels clean of any kind of grime or agent. If dirt is left on too long, it may be difficult to clean off.
- Do not use soap containing grit to clean the wheels. Be sure to use a neutral cleaning agent, and later rinse thoroughly with water. Do not clean the wheels with a stiff brush or expose them to a high-speed washing device.
- Clean the vehicle (including the alloy wheels) with water as soon as possible when it has been splashed with sea water, exposed to sea breezes, or driven on

– CONTINUED –

roads treated with salt or other agents.

10-2. Corrosion Protection

Your SUBARU has been designed and built to resist corrosion. Special materials and protective finishes have been used on most parts of the vehicle to help maintain fine appearance, strength, and reliable operation.

■ Most Common Causes of Corrosion

The most common causes of corrosion are:

- The accumulation of moisture retaining dirt and debris in body panel sections, cavities, and other areas.
- Damage to paint and other protective coatings caused by gravel and stone chips or minor accidents.

Corrosion is accelerated on the vehicle when:

- It is exposed to road salt or dust control chemicals, or used in coastal areas where there is more salt in the air, or in areas where there is considerable industrial pollution.
- It is driven in areas of high humidity, especially when temperatures range just above freezing.
- Dampness in certain parts of the vehicle remains for a long time, even though other parts of the vehicle may be dry.
- High temperatures will cause corrosion to parts of the vehicle which cannot dry quickly due to lack of proper ventilation.

■ To Help Prevent Corrosion

Wash the vehicle regularly to prevent corrosion of the body and suspension components. Also, wash the vehicle promptly after driving on any of the following surfaces.

- Roads that have been salted to prevent them from freezing in winter
- Mud, sand, or gravel
- Coastal roads

After the winter has ended, it is recommended that the underbody be given a very thorough washing.

Before the beginning of winter, check the condition of underbody components, such as the exhaust system, fuel and brake lines, brake cables, suspension, steering system, floor pan, and fenders. If any of them are found to be rusted, they should be given an appropriate rust prevention treatment or should be replaced. Contact your SUBARU dealer to perform this kind of maintenance and treatment if you need

assistance.

Repair chips and scratches in the paint as soon as you find them.

Check the interior of the vehicle for water and dirt accumulation under the floor mats because that could cause corrosion. Occasionally check under the mats to make sure the area is dry.

Keep your garage dry. Do not park your vehicle in a damp, poorly ventilated garage. In such a garage, corrosion can be caused by dampness. If you wash the vehicle in the garage or put the vehicle into the garage when wet or covered with snow, that can cause dampness.

If your vehicle is operated in cold weather and/or in areas where road salts and other corrosive materials are used, the door hinges and locks, trunk lid lock, and hood latch should be inspected and lubricated periodically.

10-3. Cleaning the Interior

Use a soft, damp cloth to clean the climate control panel, audio equipment, instrument panel, center console, combination meter panel, and switches. (Do not use organic solvents.)

■ Seat Fabric Material

Remove loose dirt, dust or debris with a vacuum cleaner. If the dirt is caked on the fabric or hard to remove with a vacuum cleaner, use a soft brush then vacuum it.

Wipe the fabric surface with a tightly wrung cloth and dry the seat fabric thoroughly. If the fabric is still dirty, wipe using a solution of mild soap and lukewarm water then dry thoroughly.

If the stain does not come out, try a commercially available fabric cleaner. Use the cleaner on a hidden place and make sure it does not affect the fabric adversely. Use the cleaner according to its instructions.

⚠ CAUTION

When cleaning the seat, do not use benzine, paint thinner, or any similar materials. Doing so could damage the surface and cause the color to deteriorate.

■ Leather Seat Materials

The leather used by SUBARU is a high quality natural product which will retain its distinctive appearance and feel for many years with proper care.

Allowing dust or road dirt to build up on the surface can cause leather to become brittle and wear prematurely. To maintain its resiliency, leather should be cleaned monthly or whenever it becomes soiled.

Before cleaning leather upholstery, vacuum it to remove dust. Use a soft and lint-free cloth dampened with lukewarm water and mild soap, taking care not to soak the leather or allow water to penetrate the stitched seams. Use a gentle circular motion while cleaning the leather - do not rub or apply extreme pressure. Wipe the leather again with another clean, slightly damp cloth to remove soap residue and dry with a soft cloth.

Minor surface blemishes or difficult dirt spots may be treated with a commercial leather spray. Never use alcohol, cleaning solvents, leather oils, varnishes or polishes on your leather as it will dry out the leather finish.

If your SUBARU is to be parked for a long

– CONTINUED –

time in bright sunlight, it is recommended that the seats and headrests be covered, or the windows shaded, to prevent fading or shrinkage.

You will discover that each leather seat section will develop soft folds or wrinkles, which is characteristic of genuine leather.

■ Synthetic Leather Upholstery

The synthetic leather material used on the SUBARU may be cleaned using mild soap or detergent and water, after first vacuuming or brushing away loose dirt. Allow the soap to soak in for a few minutes and wipe off with a clean, damp cloth. Commercial foam-type cleaners suitable for synthetic leather materials may be used when necessary.

⚠ CAUTION

Strong cleaning agents such as solvents, paint thinners, window cleaner or gasoline must never be used on leather or synthetic interior materials. Doing so could damage the surface and cause the color to deteriorate.

■ Instrument Panel, Console Panel, Switches, Combination Meter, and Other Plastic Surface

Use a soft, damp cloth to clean the instrument panel, center console, combination meter panel, and switches.

⚠ CAUTION

- **Do not use organic solvents such as paint thinners or gasoline, or strong cleaning agents that contain those solvents. Doing so could damage the surface and cause the color to deteriorate.**
- **Do not use chemical solvents that contain silicone on the vehicle audio system, electrical components of the air-conditioner or any switches. If silicone adheres to these parts, it may cause damage to electrical components.**

■ Center Information Display

To clean the center information display, wipe it with a silicone cloth or with a soft cloth. If the display(s) is/are extremely dirty, clean it with a soft cloth moistened with neutral detergent then carefully wipe off any remaining detergent.

⚠ CAUTION

- **Do not spray neutral detergent directly onto the display(s). Doing so could damage the monitor's components.**
- **Do not wipe the display(s) with a hard cloth. Doing so could scratch the monitor.**
- **Do not use cleaning fluid that contains thinner, gasoline, or any other volatile substance. Such cleaning fluid could erase the lettering on the switches on the display(s).**

11-1. Maintenance Schedule 473
11-2. Maintenance Precautions 473
Before Checking or Servicing in the Engine Compartment 474
When Checking or Servicing in the Engine Compartment 475
When Checking or Servicing in the Engine Compartment While the Engine Is Running 475
11-3. Maintenance Tips 475
Removing and Reinstalling Clips 475
11-4. Engine Hood 477
11-5. Engine Compartment Overview 479
2.5 L Models 479
2.4 L Models 480
11-6. Engine Oil 481
Engine Oil Consumption 481
Checking the Oil Level 481
Changing the Oil and Oil Filter 483
Recommended Grade and Viscosity 483
Synthetic Oil 483
11-7. Cooling System 484
Cooling Fan, Hose and Connections 484
Engine Coolant 485
11-8. Air Cleaner Element 486
Replacing the Air Cleaner Element 486
11-9. Spark Plugs 488
Recommended Spark Plugs 488
11-10. Drive Belts 489
11-11. Continuously Variable Transmission Fluid 489
11-12. Front Differential Gear Oil and Rear Differential Gear Oil 489
Recommended Grade and Viscosity 489
11-13. Brake Fluid 490
Checking the Fluid Level 490
Recommended Brake Fluid 490
11-14. Brake Booster 491
11-15. Brake Pedal 491
11-16. Replacement of Brake Pad 491
11-17. Tires and Wheels 492
Types of Tires 492
Tire Pressure Monitoring System (TPMS) (U.S. Spec. Models) 492
Tire Inspection 494
Tire Pressures and Wear 494
Wheel Balance 496
Wear Indicators 497
Rotational Direction of Tires 497
Tire Rotation 498
Tire Replacement 498
Wheel Replacement 499
11-18. Alloy Wheels 500
11-19. Windshield Washer Fluid 500
11-20. Replacement of Wiper Blades 501
Windshield Wiper Blade Assembly 502
Window Wiper Blade Rubber 503
Rear Window Wiper Blade Assembly (Outback) 503
Rear Window Wiper Blade Rubber (Outback) 504
11-21. Battery 505

11-22. Fuses 506
11-23. Installation of Accessories..... 507
11-24. Replacing Bulbs..... 508
Headlights (Models with LED Headlights)..... 508
Front Turn Signal Light..... 508
Rear Combination Lights 509
Backup Light..... 511
Dome Light..... 513
Map Lights..... 513
Door Step Light..... 513
Cargo Area Light (Outback)..... 513
Trunk Light (Legacy) 514
Other Bulbs 514
11-25. Replacing Battery 514
Replacing Battery of Access Key Fob..... 515
Replacing Battery of Transmitter 516

11-1. Maintenance Schedule

U.S. models

The scheduled maintenance items required to be serviced at regular intervals are shown in the “Warranty and Maintenance Booklet.” For details, read the separate “Warranty and Maintenance Booklet.”

Canada models

The scheduled maintenance items required to be serviced at regular intervals are shown in the “Warranty and Service Booklet.” For details, read the separate “Warranty and Service Booklet.”

Except for U.S. and Canada models

Some items of your vehicle are required to be serviced at scheduled intervals. For details about your maintenance schedule, read the separate “Warranty and Maintenance Booklet.”

11-2. Maintenance Precautions

When maintenance and service are required, it is recommended that all work be done by an authorized SUBARU dealer.

If you perform maintenance and service by yourself, you should familiarize yourself with the information provided in this section on general maintenance and service for your SUBARU.

Incorrect or incomplete service could cause improper or unsafe vehicle operation. Any problems caused by improper maintenance and service performed by you are not eligible for warranty coverage.

WARNING

- **Testing of an All-Wheel Drive vehicle must NEVER be performed on a single two-wheel dynamometer or similar apparatus. Attempting to do so will result in transmission damage and in uncontrolled vehicle movement and may cause an accident or injuries to persons nearby.**
- **Always select a safe area when performing maintenance on your vehicle.**
- **Always be very careful to avoid injury when working on the vehicle. Remember that some of the materials in the vehicle may be hazardous if improperly used or handled, for example, battery acid.**
- **Your vehicle should only be serviced by persons fully competent to do so. Serious personal injury may result to persons not experienced in servicing vehicles.**
- **Always use the proper tools and make certain that they are well maintained.**
- **Never get under the vehicle supported only by a jack. Always use safety stands to support the vehicle.**
- **Never keep the engine running in a poorly ventilated area, such as a garage or other closed areas.**
- **Do not smoke or allow open flames around the fuel or battery. This will cause a fire.**
- **Because the fuel system is under pressure, replacement of the fuel filter should be performed only by your SUBARU dealer.**

– CONTINUED –

- Wear adequate eye protection to guard against getting oil or fluids in your eyes. If something does get in your eyes, thoroughly wash them out with clean water.
- Do not tamper with the wiring of the SRS airbag system or seatbelt pretensioner system, or attempt to take its connectors apart, as that may activate the system or it can render it inoperative. NEVER use a circuit tester for these wiring. If your SRS airbag or seatbelt pretensioner needs service, consult your nearest SUBARU dealer.
- Check the inside of the engine compartment to see if there are any cloths and tools left. If they are left inside, they may be a cause of malfunction and fire.

NOTE

SUBARU does not endorse the use of non-SUBARU approved flushing systems and strongly advises against performing these services on a SUBARU vehicle. Non-SUBARU approved flushing systems use chemicals and/or solvents which have not been tested or approved by SUBARU. SUBARU warranties do not cover any part of the vehicle which is damaged by adding or applying chemicals and/or solvents other than those approved or recommended by SUBARU.

■ Before Checking or Servicing in the Engine Compartment

⚠ WARNING

- Always stop the engine and apply the parking brake to prevent the vehicle from moving.
- Always let the engine cool down. Engine parts become very hot when the engine is running and remain hot for some time after the engine is stopped.
- Do not spill engine oil, engine coolant, brake fluid or any other fluid on hot engine components. This may cause a fire.
- When the ignition switch is in the "ON" position, the cooling fan may operate suddenly even when the engine is stopped. If your body or clothes come into contact with a rotating fan, that could result in serious injury. To avoid risk of injury, perform the following precautions.
  - Models with push-button start system:
    Always turn the push-button ignition switch to the "OFF" position and confirm that the operation indicator on the switch is turned off. Then take the access key fob out from the vehicle.
  - Models without push-button start system:
    Always remove the key from the ignition switch.
- Before performing any servicing on a vehicle equipped with a remote engine start system temporarily place that system in the service mode to prevent it from unexpectedly starting the engine.

■ When Checking or Servicing in the Engine Compartment

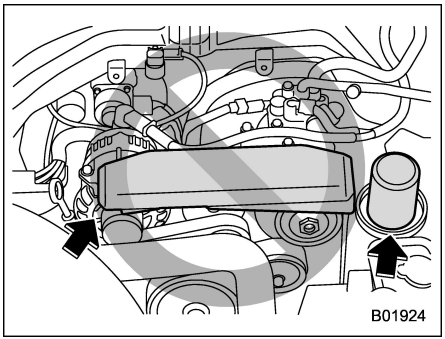

CAUTION

- **Do not contact the belt cover while checking the components in the engine compartment. Doing so may cause your hand to slip off the belt cover and result in an unexpected injury.**

- **Do not touch the oil filter until the engine has cooled down completely. Doing so may result in a burn or other injury. Note that the oil filter becomes very hot when the engine is running and remains hot for some time after the engine has stopped.**

■ When Checking or Servicing in the Engine Compartment While the Engine Is Running

WARNING

A running engine can be dangerous. Keep your fingers, hands, clothing, hair and tools away from the cooling fan, belts and any other moving engine parts. Removing rings, watches and ties is advisable.

11-3. Maintenance Tips

Some clips and fender linings must be removed before replacing the air cleaner elements or specific bulbs.

■ Removing and Reinstalling Clips

▼ Removing clips

There are several types of clips used for your vehicle.

▽ **Type A and D clips**

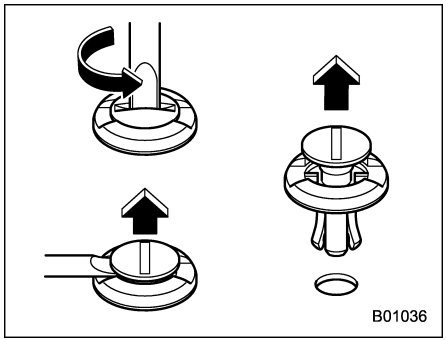

Type A clips

– CONTINUED –

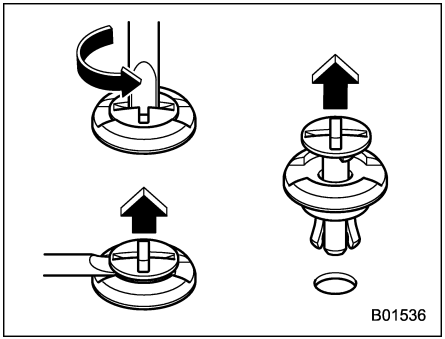

Type D clips

1. Turn the clips counterclockwise using a flat-head screwdriver until the center portion of the clip is raised.
2. Remove the clips with a flat-head screwdriver using leverage.

▽ Type B clips

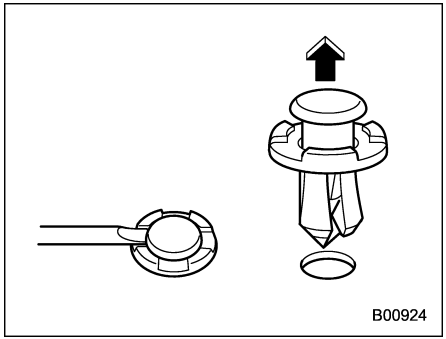

1. Pull out the center portion of the clip using a flat-head screwdriver as shown in the illustration.
2. Pull the protruded center portion to remove the entire body of the clip.

▽ Type C clips

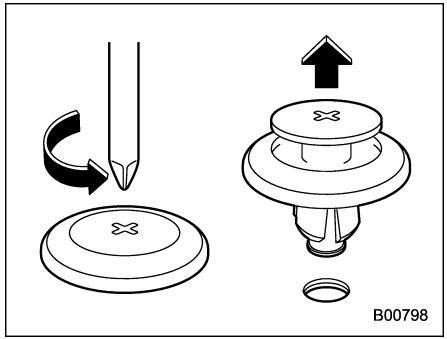

1. Turn the clip counterclockwise using a Phillips screwdriver until the center portion of the clip is raised.
2. Remove the entire clip by pulling it up.

▼ **Reinstalling clips**

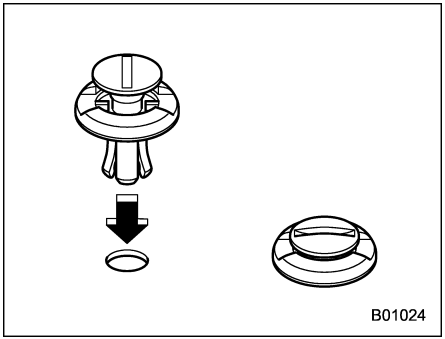

Type A clips

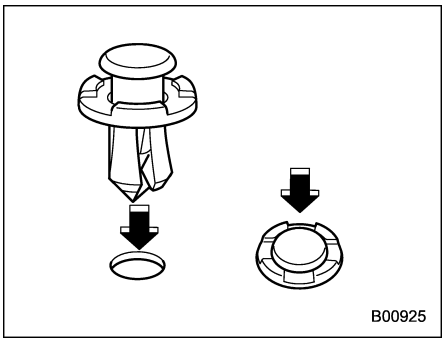

Type B clips

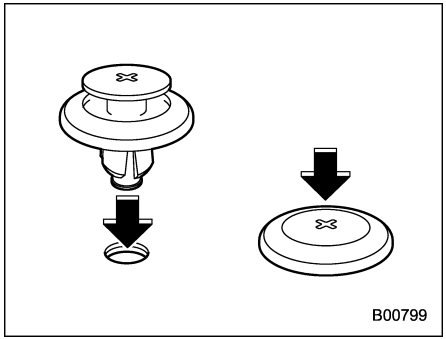

Type C clips

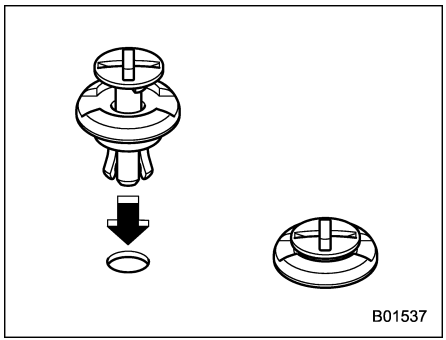

Type D clips

Insert the clip without the center portion first and then push the center portion of the clip into the hole.

11-4. Engine Hood

⚠ CAUTION

- **Be extremely careful not to catch fingers or other objects when closing the engine hood.**
- **Do not push the hood forcibly to close it. It could deform the metal.**
- **Be extremely careful opening the engine hood when the wind is strong. The engine hood could close suddenly, possibly causing injuries from slamming.**
- **Do not install accessories other than genuine SUBARU parts to the engine hood. If the engine hood becomes too heavy, the stay may not be able to support holding it open.**
- **Check that the end of the hood stay is inserted into the slot. If it is not inserted properly, the hood may drop and cause injury.**

– CONTINUED –

To open the hood:

1. If the wiper blades are lifted off the windshield, return them to their original positions.

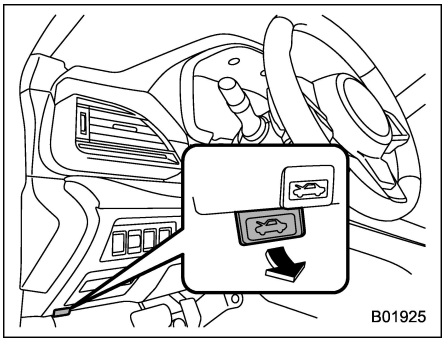

2. Pull the hood release knob under the instrument panel.

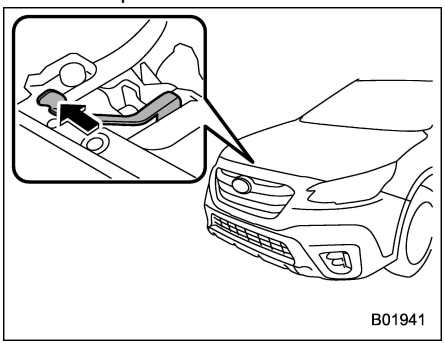

3. Release the secondary hood lock by moving the lever between the front grille and the hood toward the left.

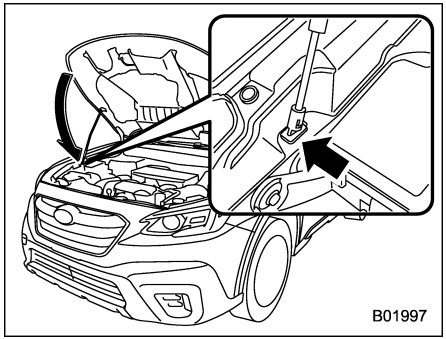

4. Lift up the hood, release the hood prop from its retainer and put the end of the hood prop into the slot in the engine compartment.

To close the hood:

1. Lift the hood slightly and remove the hood prop from the slot in the engine compartment and return the prop to its retainer.
2. Lower the hood to a height of approximately 5.9 in (15 cm) above its closed position and then let it drop.
3. After closing the hood, be sure the hood is securely locked.

If this does not close the hood, release it from a slightly higher position.

WARNING

Always check that the hood is properly locked before you start driving. If it is not, it might fly open while the vehicle is moving and block your view, which may cause an accident and serious bodily injury.

11-5. Engine Compartment Overview

■ 2.5 L Models

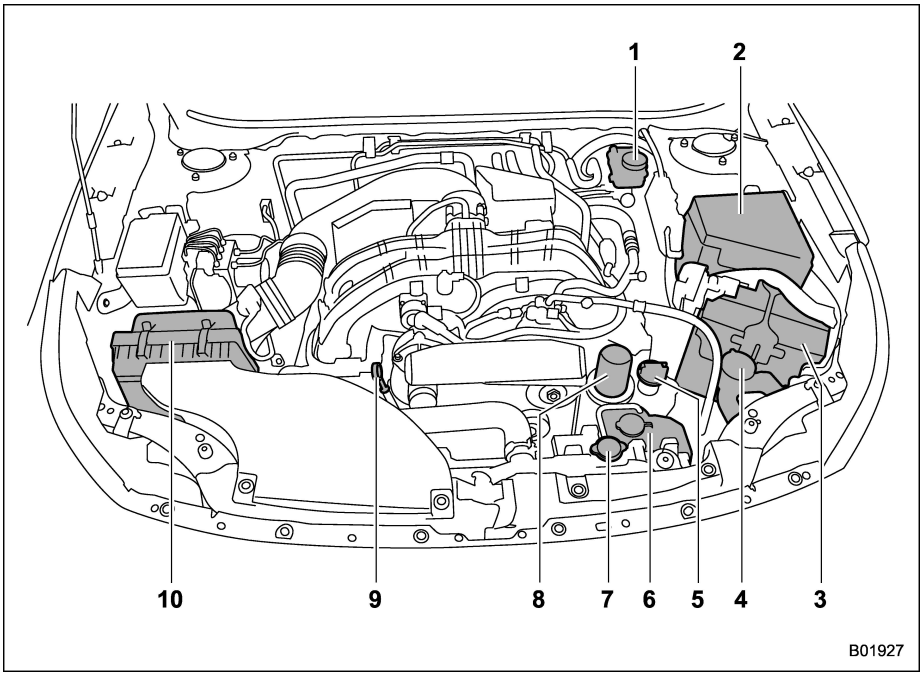

1) Brake fluid reservoir (page 490)
2) Main fuse box (page 506)
3) Battery (page 505)
4) Windshield washer tank (page 500)
5) Engine oil filler cap (page 481)
6) Engine coolant reservoir (page 485)
7) Radiator cap (page 485)
8) Engine oil filter (page 483)
9) Engine oil level gauge (page 481)
10) Air cleaner case (page 486)

– CONTINUED –

■ 2.4 L Models

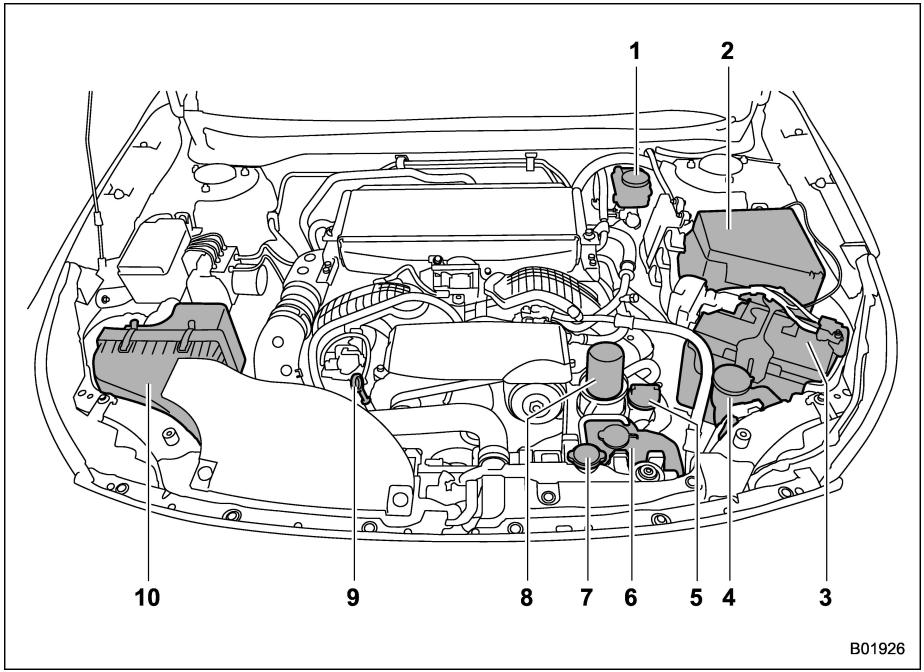

1) Brake fluid reservoir (page 490)
2) Main fuse box (page 506)
3) Battery (page 505)
4) Windshield washer tank (page 500)
5) Engine oil filler cap (page 481)
6) Engine coolant reservoir (page 485)
7) Radiator cap (page 485)
8) Engine oil filter (page 483)
9) Engine oil level gauge (page 481)
10) Air cleaner case (page 486)

11-6. Engine Oil

CAUTION

- **If the level gauge is not pulled out easily, twist the level gauge right and left, then pull it out. Otherwise, you may be injured accidentally straining yourself.**
- **Use only engine oil with the recommended grade and viscosity.**
- **Be careful not to spill engine oil when adding it. If oil touches the exhaust pipe, it may cause a bad smell, smoke, and/or a fire. If engine oil gets on the exhaust pipe, be sure to wipe it off.**

■ Engine Oil Consumption

Some engine oil will be consumed while driving. The rate of consumption can be affected by such factors as transmission type, driving style, terrain and temperature. Under the following conditions, oil consumption can be increased and thus require refilling between maintenance intervals:

- When the engine is new and within the break-in period
- When the engine oil is of lower quality
- When the incorrect oil viscosity is used
- When engine braking is employed (repeatedly)
- When the engine is operated at high engine speeds (for extended periods of time)
- When the engine is operated under heavy loads (for extended periods of time)
- When towing a trailer (Outback)
- When the engine idles for extended periods of time
- When the vehicle is operated in stop and go and/or heavy traffic situations
- When the vehicle is used under severe thermal conditions
- When the vehicle accelerates and decelerates frequently

Under these or similar conditions, you should check your oil at least every 2nd fuel fill-up and change your engine oil more frequently. Different drivers in the same car may experience different results. If your oil consumption rate is greater than expected, contact your authorized SUBARU retailer who may perform a test under controlled conditions.

■ Checking the Oil Level

1. Park the vehicle on a level surface and stop the engine. If you check the oil level just after stopping the engine, wait a few minutes for the oil to drain back into the oil pan before checking the level.

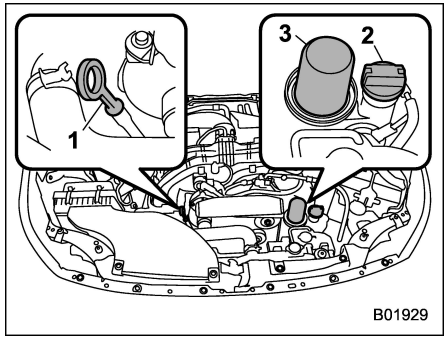

2.5 L models
1) Oil level gauge
2) Oil filler cap
3) Oil filter

– CONTINUED –

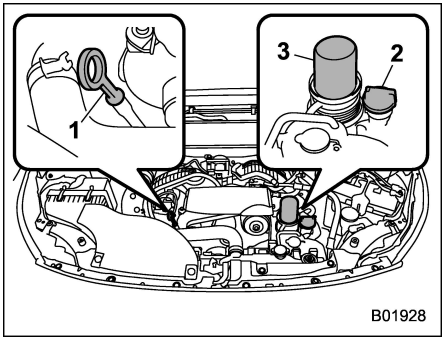

2.4 L models
1) Oil level gauge
2) Oil filler cap
3) Oil filter

CAUTION

If the level gauge is not pulled out easily, twist the level gauge right and left, then pull it out. Otherwise, you may be injured accidentally straining yourself.

2. Pull out the level gauge, wipe it clean, and insert it again.
3. Be sure the level gauge is correctly inserted until it stops.

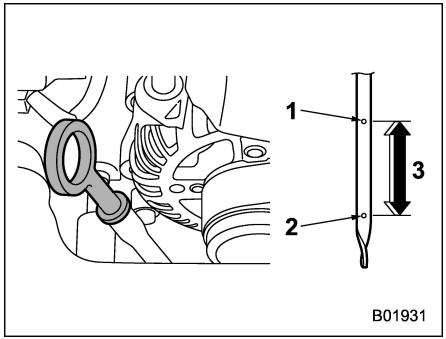

2.5 L models
1) Full level
2) Low level
3) Approximately 1.1 US qt (1.0 liter, 0.9 Imp qt) from low level to full level

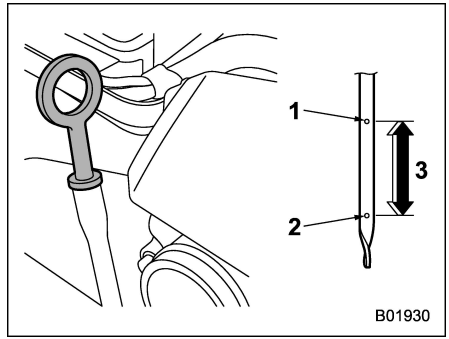

2.4 L models
1) Full level
2) Low level
3) Approximately 1.1 US qt (1.0 liter, 0.9 Imp qt) from low level to full level

4. Pull out the oil level gauge again.
5. Check the oil level on the gauge. If the oil level is below the low level mark, add oil so that the full level is reached.

CAUTION

- **Be careful not to touch the engine oil filter when removing the oil filler cap. Doing so may result in a burn, a pinched finger, or may cause some other injury.**
- **Use only engine oil with the recommended grade and vis-**

cosity.

- **Be careful not to spill engine oil when adding it. If oil touches the exhaust pipe, it may cause a bad smell, smoke, and/or a fire. If engine oil gets on the exhaust pipe, be sure to wipe it off.**

To add engine oil, remove the engine oil filler cap and slowly pour engine oil through the filler neck. After pouring oil into the engine, you must use the level gauge to confirm that the oil level is correct.

NOTE

- **To prevent overfilling the engine oil, do not add any additional oil above the full level when the engine is cold.**
- **The engine low oil level warning light may stay illuminated when the engine is started straight after topping up or changing the engine oil. In such cases, park the vehicle on a level surface and wait for more than a minute until the oil level settles, after which the warning light will turn off. Refer to "Engine Low Oil Level Warning Indicator" ☞P179.**

■ Changing the Oil and Oil Filter

Change the oil and oil filter according to the maintenance schedule in the "Warranty and Maintenance Booklet."

NOTE

- **Changing the engine oil and oil filter should be performed by a well-trained expert. Contact your SUBARU dealer for changing the engine oil and oil filter. Fully trained mechanics are on standby at a SUBARU dealer to utilize the special tools, spare parts and recommended oil for this work, and also, used oils are properly disposed of.**
- **If performing oil replacement yourself, observe the local regulations and dispose of waste oil properly.**

■ Recommended Grade and Viscosity

⚠ CAUTION

Use only engine oil with the recommended grade and viscosity.

Refer to "Engine Oil" ☞P522.

NOTE

Engine oil viscosity (thickness) affects fuel economy. Oils of lower viscosity provide better fuel economy. However, in hot weather, oil of higher viscosity is required to properly lubricate the engine.

■ Synthetic Oil

You should use synthetic engine oil that meets the same requirements given for conventional engine oil. When using synthetic oil, you must use oil of the same classification, viscosity and grade shown in this Owner's Manual. Refer to "Engine Oil" ☞P522. Also, you must follow the oil and filter changing intervals shown in the Warranty and Maintenance booklet.

NOTE

Synthetic oil of the grade and viscosity noted in chapter 12 is the recommended engine oil for optimum engine performance. Conventional oil may be used if synthetic oil is unavailable.

11-7. Cooling System

WARNING

Never attempt to remove the radiator cap until the engine has been shut off and has cooled down completely. Since the coolant is under pressure, you may suffer serious burns from a spray of boiling hot coolant when the cap is removed.

CAUTION

- **Vehicles are filled at the factory with SUBARU Super Coolant that does not require the first change for 11 years/137,500 miles (11 years/220,000 km). This coolant should not be mixed with any other brand or type of coolant during this period. Mixing with a different coolant will reduce the life of the coolant. Should it be necessary to top off the coolant for any reason, use only SUBARU Super Coolant.**

  If the SUBARU Super Coolant is diluted with another brand or type, the maintenance interval is shortened to that of the mixing coolant.
- **Do not splash the engine coolant over painted parts. The alcohol contained in the engine coolant may damage the paint surface.**

■ Cooling Fan, Hose and Connections

Your vehicle employs an electric cooling fan which is thermostatically controlled to operate when the engine coolant reaches a specific temperature.

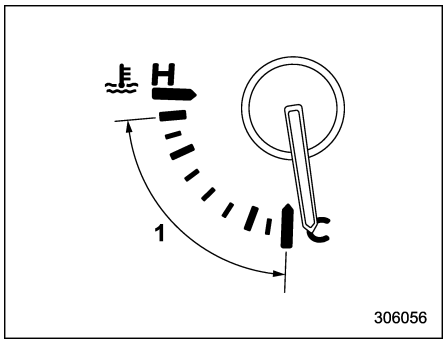

1) Normal operating range

If the radiator cooling fan does not operate even when the engine coolant temperature gauge exceeds the normal operating range, the cooling fan circuit may be defective. Refer to “Engine Coolant Temperature Gauge” ☞P173.

Check the fuse and replace it if necessary. Refer to “Fuses” ☞P506 and “Fuses and Circuits” ☞P528. If the fuse is not blown, have the cooling system checked by your SUBARU dealer.

If frequent addition of coolant is necessary, there may be a leak in the engine cooling system. It is recommended that the cooling system and connections be checked for leaks, damage, or looseness.

■ Engine Coolant

▼ Checking the coolant level

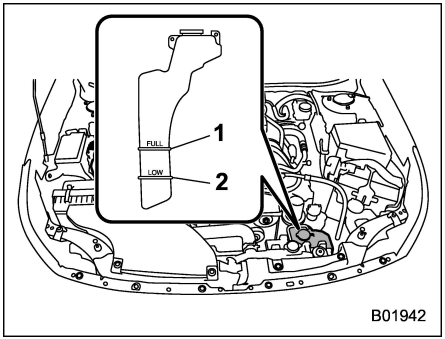

1) "FULL" level mark
2) "LOW" level mark

Check the coolant level at each fuel stop.

1. Check the coolant level on the outside of the reservoir while the engine is cool.
2. If the level is close to or lower than the "LOW" level mark, add coolant up to the "FULL" level mark. If the reserve tank is empty, remove the radiator cap and refill coolant up to just below the filler neck as shown in the following illustration.

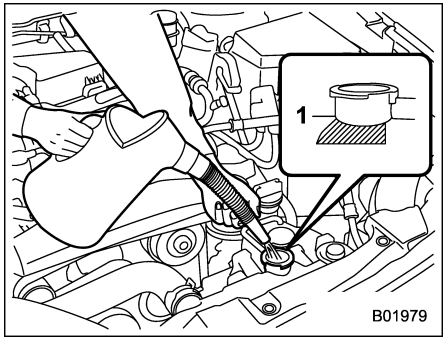

1) Fill up to this level.

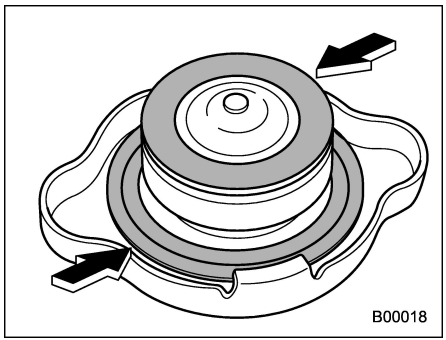

3. After refilling the reserve tank and the radiator, reinstall the cap and check that the rubber gaskets inside the radiator cap are in the proper position.

⚠ CAUTION

- **Be careful not to spill engine coolant when adding it. If coolant touches the exhaust pipe, it may cause a bad smell, smoke, and/or a fire. If engine coolant gets on the exhaust pipe, be sure to wipe it off.**
- **Do not splash the engine coolant over painted parts. The alcohol contained in the engine coolant may damage the paint surface.**

▼ Changing the coolant

It may be difficult to change the coolant. Have the coolant changed by your SUBARU dealer if necessary.

The coolant should be changed according to the maintenance schedule in the "Warranty and Maintenance Booklet."

11-8. Air Cleaner Element

WARNING

Do not operate the engine with the air cleaner element removed. The air cleaner element not only filters intake air but also stops flames if the engine backfires. If the air cleaner element is not installed when the engine backfires, you could be burned.

CAUTION

When replacing the air cleaner element, use a genuine SUBARU air cleaner element. If it is not used, there is the possibility of causing a negative effect to the engine.

The air cleaner element functions as a filter screen. When the element is perforated or removed, engine wear will be excessive and engine life shortened.

The air cleaner element is a dry type. It is unnecessary to clean or wash the element.

■ Replacing the Air Cleaner Element

Replace the air cleaner element according to the maintenance schedule in the "Warranty and Maintenance Booklet." Under extremely dusty conditions, replace it more frequently. It is recommended that you always use genuine SUBARU parts.

▼ 2.5 L models

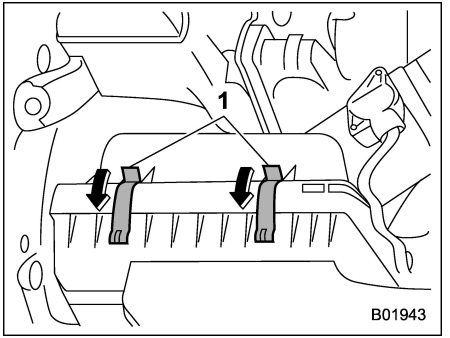

1) Clip

1. Unsnap the two clips holding the air cleaner case (rear).

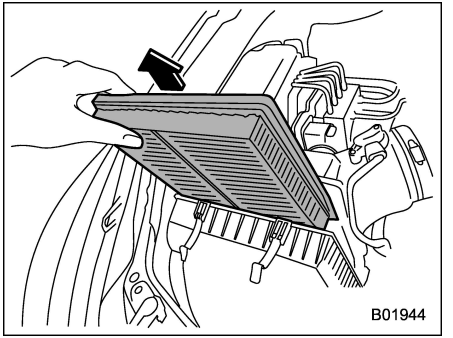

2. Open the air cleaner case and remove the air cleaner element.

CAUTION

If the inside of the air cleaner case is extremely soiled (for example, by sand), contact a SUBARU dealer and have the air cleaner case cleaned.

3. If you find large foreign objects such as leaves inside the air cleaner case, remove the foreign objects.

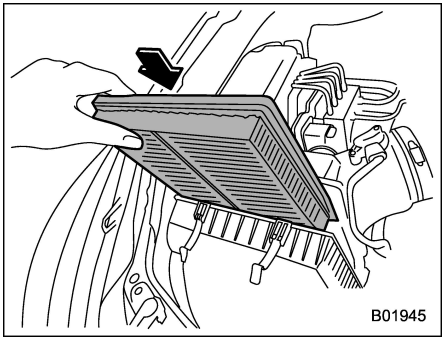

4. Install a new air cleaner element in the way the longitudinal side and the transverse side face as shown in the illustration.

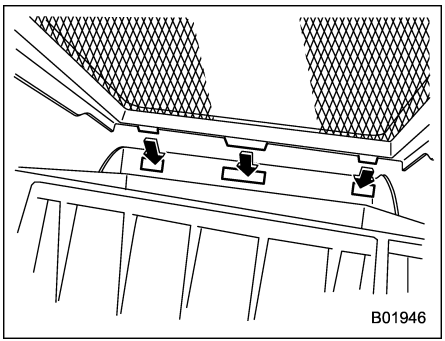

5. To install the air cleaner case (rear), insert the three projections on the air cleaner case (rear) into the slits on the air cleaner case (front).

6. Install in the reverse order of removal.

▼ 2.4 L models

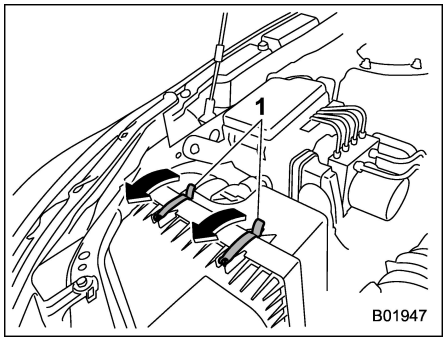

1) Clips

1. Unsnap the two clips holding the air cleaner case (rear).

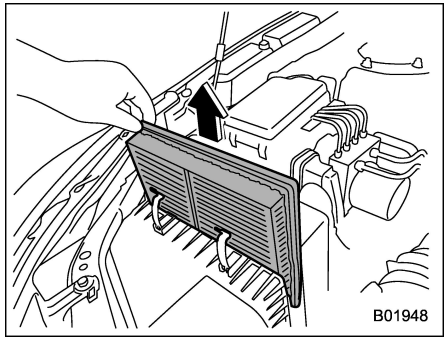

2. Open the air cleaner case and remove the air cleaner element.

⚠ CAUTION

If the inside of the air cleaner case is extremely soiled (for example, by sand), contact a SUBARU dealer and have the air cleaner case cleaned.

3. If you find large foreign objects such as leaves inside the air cleaner case, remove the foreign objects.

– CONTINUED –

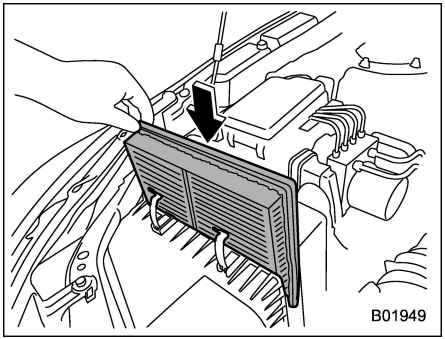

4. Install a new air cleaner element in the way the longitudinal side and the transverse side face as shown in the illustration.

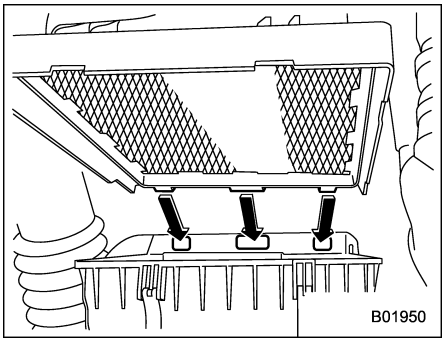

5. To install the air cleaner case (rear), insert the three projections on the air cleaner case (rear) into the slits on the air cleaner case (front).

6. Install the removed parts in the reverse order of removal.

11-9. Spark Plugs

It may be difficult to replace the spark plugs. It is recommended that you have the spark plugs replaced by your SUBARU dealer.

The spark plugs should be replaced according to the maintenance schedule in the “Warranty and Maintenance Booklet.”

■ Recommended Spark Plugs

Refer to “Electrical System” ☞P526.

11-10. Drive Belts

It is unnecessary to check the deflection of the drive belt periodically because your engine is equipped with an automatic belt tension adjuster. However, replacement of the belt should be done according to the maintenance schedule in the “Warranty and Maintenance Booklet.” Consult your SUBARU dealer for replacement.

If the belt is loose, cracked or worn, contact your SUBARU dealer.

11-11. Continuously Variable Transmission Fluid

There is no fluid level gauge. It is unnecessary to check the continuously variable transmission fluid level. However, if necessary, consult your SUBARU dealer for inspection.

11-12. Front Differential Gear Oil and Rear Differential Gear Oil

It is not necessary to check the gear oil level. Check that there are no cracks, damage or leakage. However, the oil inspection should be performed according to the maintenance schedule in the “Warranty and Maintenance Booklet.” Consult your SUBARU dealer for details.

■ Recommended Grade and Viscosity

Each oil manufacturer has its own base oils and additives. Never use different brands together. For details, refer to “Front Differential and Rear Differential Gear Oil” ☞P524.

⚠ CAUTION

Using a differential gear oil other than the specified oil may cause a decline in vehicle performance.

11-13. Brake Fluid

■ Checking the Fluid Level

⚠ WARNING

- **Never let brake fluid contact your eyes because brake fluid can be harmful to your eyes. If brake fluid gets in your eyes, immediately flush them thoroughly with clean water. For safety, when performing this work, wearing eye protection is advisable.**
- **Brake fluid absorbs moisture from the air. Any absorbed moisture can cause a dangerous loss of braking performance.**
- **If the vehicle requires frequent refilling, there may be a leak. If you suspect a problem, have the vehicle checked at your SUBARU dealer.**

⚠ CAUTION

- **When adding brake fluid, be careful not to allow any dirt into the reservoir.**
- **Never splash the brake fluid over painted surfaces or rubber parts. Alcohol contained in the brake fluid may damage them.**
- **Be careful not to spill brake fluid when adding it. If brake fluid touches the exhaust pipe, it may cause a bad smell, smoke, and/or a fire. If brake fluid gets on the exhaust pipe, be sure to wipe it off.**

Visually check the brake fluid level of the reservoir monthly on the even surface.

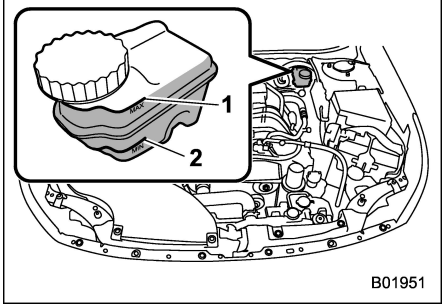

1) “MAX” level line
2) “MIN” level line

Be sure to check the brake fluid level from the outside of the reservoir. If the fluid level is below “MIN”, top up brake fluid to “MAX”. Use only brake fluid from a sealed container.

■ Recommended Brake Fluid

Refer to “Fluids” ☞P525.

⚠ CAUTION

Never use different brands of brake fluid together. Also, avoid mixing DOT 3 and DOT 4 brake fluids even if they are the same brand.

11-14. Brake Booster

The brake booster utilizes the vacuum produced by the engine manifold to reduce the force required to depress the brake pedal.

The vacuum in the brake booster may be insufficient if the brake pedal is depressed when the engine is stopped or after the vehicle has been parked for a long period of time. It such cases, it is necessary to depress the brake pedal using greater force than usual.

11-15. Brake Pedal

Check the brake pedal free play and reserve distance according to the maintenance schedule in the “Warranty and Maintenance Booklet”.

11-16. Replacement of Brake Pad

CAUTION

- **If you continue to drive despite the scraping noise from the audible brake pad wear indicator, it will result in the need for costly brake rotor repair or replacement.**
- **It is recommended that you disconnect the vehicle battery before replacing the brake pad. However, it is dangerous to disconnect the vehicle battery. We recommend that you have your SUBARU dealer replace the brake pad.**

– CONTINUED –

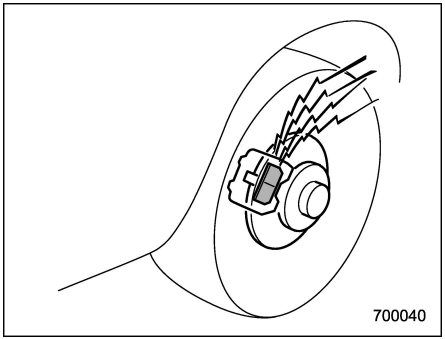

The disc brakes have audible wear indicators on the brake pads. If the brake pads wear close to their service limit, the wear indicator makes a very audible scraping noise when the brake pedal is applied.

If you hear this scraping noise each time you apply the brake pedal, have the brake pads serviced by your SUBARU dealer as soon as possible.

11-17. Tires and Wheels

■ Types of Tires

You should be familiar with type of tires present on your vehicle.

▼ All season tires

The factory-installed tires on your new vehicle are all season tires.

All season tires are designed to provide an adequate measure of traction, handling and braking performance in year-round driving including snowy and icy road conditions. However all season tires do not offer as much traction performance as winter (snow) tires in heavy or loose snow or on icy roads.

All season tires are identified by “ALL SEASON” and/or “M+S” (Mud & Snow) on the tire sidewall.

▼ Summer tires

Summer tires are high-speed capability tires best suited for highway driving under dry conditions.

Summer tires are inadequate for driving on slippery roads such as on snow-covered or icy roads.

If you drive your vehicle on snow-covered or icy roads, we strongly recommend the use of winter (snow) tires.

When installing winter tires, be sure to replace all four tires.

▼ Winter (snow) tires

Winter tires are best suited for driving on snow-covered and icy roads. However winter tires do not perform as well as summer tires and all season tires on roads other than snow-covered and icy roads.

■ Tire Pressure Monitoring System (TPMS) (U.S. Spec. Models)

The tire pressure monitoring system provides the driver with a warning message by sending a signal from a sensor that is installed in each wheel when tire pressure is severely low. The tire pressure monitoring system will activate only when the vehicle is driven. Also, this system may not react immediately to a sudden drop in tire pressure (for example, a blow-out caused by running over a sharp object).

If you adjust the tire pressures in a warm garage and will then drive the vehicle in cold outside air, the resulting drop in tire pressures may cause the low tire pressure warning light to illuminate. To avoid this problem when adjusting the tire pressures in a warm garage, inflate the tires to pressures higher than those shown on the tire placard. Specifically, inflate them by an extra 1 psi (6.9 kPa, 0.07 kgf/cm^2) for

every difference of 10°F (5.6°C) between the temperature in the garage and the temperature outside. By way of example, the following table shows the required tire pressures that correspond to various outside temperatures when the temperature in the garage is 60°F (15.6°C).

Example:

Tire size: 225/55R17 97V, 225/50R18 95V

Standard tire pressures:

Front: 33 psi (230 kPa, 2.3 kgf/cm2)

Rear: 32 psi (220 kPa, 2.2 kgf/cm2)

Garage temperature: 60°F (15.6°C)

Outside temperature	Adjusted pressure [psi (kPa, kgf/cm2)]	
	Front	Rear
30°F (−1°C)	36 (250, 2.5)	35 (240, 2.4)
10°F (−12°C)	38 (265, 2.65)	37 (255, 2.55)
−10°F (−23°C)	41 (280, 2.8)	39 (270, 2.7)

Example:

Tire size: 225/65R17 102H, 225/60R18 100H

Standard tire pressures:

Front: 35 psi (240 kPa, 2.4 kgf/cm2)

Rear: 33 psi (230 kPa, 2.3 kgf/cm2)

Garage temperature: 60°F (15.6°C)

Outside temperature	Adjusted pressure [psi (kPa, kgf/cm2)]	
	Front	Rear
30°F (−1°C)	38 (260, 2.65)	36 (250, 2.5)
10°F (−12°C)	40 (275, 2.8)	38 (265, 2.65)
−10°F (−23°C)	42 (290, 2.95)	41 (280, 2.8)

If the low tire pressure warning light illuminates when you drive the vehicle in cold outside air after adjusting the tire pressures in a warm garage, re-adjust the tire pressures using the method described above. Then, increase the vehicle speed to at least 20 mph (32 km/h) and check to see that the low tire pressure warning light goes off a few minutes later. If the low tire pressure warning light does not go off, the tire pressure monitoring system may not be functioning normally. In this event, go to a SUBARU dealer to have the system inspected as soon as possible.

While the vehicle is driven, friction between tires and the road surface causes the tires to warm up. After illumination of the low tire pressure warning light, any increase in the tire pressures caused by an increase in the outside air temperature or by an increase in the temperature in the tires can cause the low tire pressure warning light to go off.

System resetting is necessary when the wheels are changed (for example, a switch to snow tires) and new TPMS valves are installed on the newly fitted wheels. Have this work performed by a SUBARU dealer following wheel replacement.

It may not be possible to install TPMS valves on certain wheels that are on the market. Therefore, if you change the wheels (for example, a switch to snow tires), use wheels that have the same part number as the standard-equipment wheels. Without four operational TPMS valve/sensors on the wheels, the TPMS will not fully function and the warning light in the instrument panel will illuminate steadily after blinking for approximately one minute.

When a tire is replaced, adjustments are necessary to ensure continued normal operation of the tire pressure monitoring system. As with wheel replacement, therefore, you should have the work performed by a SUBARU dealer.

WARNING

If the low tire pressure warning light does not illuminate briefly after the ignition switch is turned ON or the light illuminates steadily after blinking for approximately one minute,

– CONTINUED –

you should have your Tire Pressure Monitoring System checked at a SUBARU dealer as soon as possible.

If this light illuminates while driving, never brake suddenly. Instead, perform the following procedure. Otherwise an accident involving serious vehicle damage and serious personal injury could occur.

1) **Keep driving straight ahead while gradually reducing speed.**
2) **Slowly pull off the road to a safe place.**

If this light still illuminates while driving after adjusting the tire pressure, a tire may have significant damage and a fast leak that causes the tire to lose air rapidly. If you have a flat tire, replace it with a spare tire as soon as possible.

When a spare tire is mounted or a wheel rim is replaced without the original pressure sensor/transmitter being transferred, the low tire pressure warning light will illuminate steadily after blinking for approximately one minute. This indicates the TPMS is unable to monitor all four road wheels. Contact your SUBARU dealer as soon as possible for tire and sensor replacement and/or system resetting. If the light illuminates steadily after blinking for approximately one minute, promptly contact a SUBARU dealer to have the system inspected.

■ Tire Inspection

Check on a daily basis that the tires are free from serious damage, nails, and stones. At the same time, check the tires for abnormal wear.

Contact your SUBARU dealer immediately if you find any problem.

NOTE

- **When the wheels and tires strike curbs or are subjected to harsh treatment as when the vehicle is driven on a rough surface, they can suffer damage that cannot be seen with the naked eye. This type of damage does not become evident until time has passed. Try not to drive over curbs, potholes or on other rough surfaces. If doing so is unavoidable, keep the vehicle's speed down to a walking pace or less, and approach the curbs as squarely as possible. Also, make sure the tires are not pressed against the curb when you park the vehicle.**
- **If you feel unusual vibration while driving or find it difficult to steer the vehicle in a straight line, one of the tires and/or wheels may be damaged. Drive slowly to the nearest authorized SUBARU dealer and have the vehicle inspected.**

■ Tire Pressures and Wear

Maintaining the correct tire pressures helps to maximize the tires' service lives and is essential for good running performance. Check and, if necessary, adjust the pressure of each tire and the spare (if equipped) at least once a month and before any long journey.

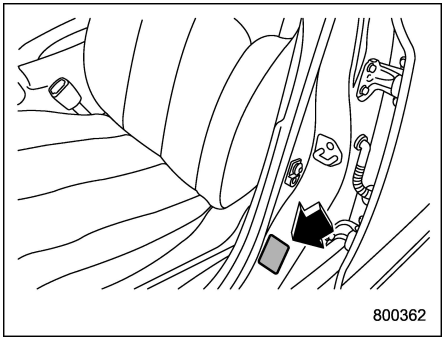

Tire placard

Check the tire pressures when the tires are cold. Use a pressure gauge to adjust the tire pressures to the values shown on the tire placard. The tire placard is located on the door pillar on the driver's side.

Driving even a short distance warms up the tires and increases the tire pressures. Also, the tire pressures are affected by the outside temperature. It is best to check tire pressure outdoors before driving the vehicle.

When a tire becomes warm, the air inside it expands, causing the tire pressure to increase. Be careful not to mistakenly release air from a warm tire to reduce its pressure.

NOTE

- **The air pressure in a tire increases by approximately 4.3 psi (30 kPa, 0.3 kgf/cm^2) when the tire becomes warm.**
- **The tires are considered cold when the vehicle has been parked for at least 3 hours or has been driven less than 1 mile (1.6 km).**

WARNING

Do not let air out of warm tires to adjust pressure. Doing so will result in low tire pressure.

Incorrect tire pressures detract from controllability and ride comfort, and they cause the tires to wear abnormally.

- Correctly inflated tires (tread worn evenly)

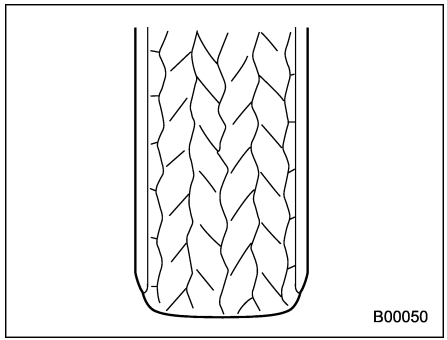

Roadholding is good, and steering is responsive. Rolling resistance is low, so fuel consumption is also lower.

– CONTINUED –

- Under inflated tires (tread worn at shoulders)

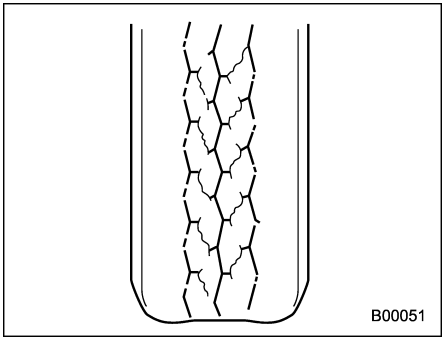

Rolling resistance is high, so fuel consumption is also higher.

- Over inflated tires (tread worn in center)

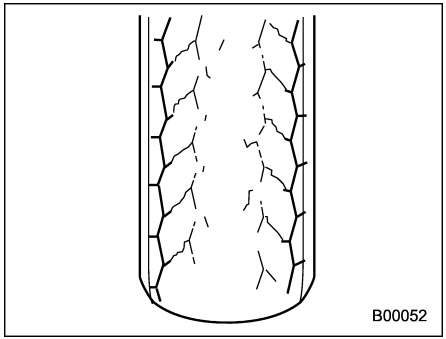

Ride comfort is poor. Also, the tire magnifies the effects of road surface bumps and dips, possibly resulting in vehicle damage.

WARNING

Driving at high speeds with excessively low tire pressures can cause the tires to deform severely and to rapidly become hot. A sharp increase in temperature could cause tread separation, and destruction of the tires. The resulting loss of vehicle control could lead to an accident.

■ Wheel Balance

Each wheel was correctly balanced when your vehicle was new, but the wheels will become unbalanced as the tires become worn during use. Wheel imbalance causes the steering wheel to vibrate slightly at certain vehicle speeds and detracts from the vehicle's straight-line stability. It can also cause steering and suspension system problems and abnormal tire wear. If you suspect that the wheels are not correctly balanced, have them checked and adjusted by your SUBARU dealer. Also have them adjusted after tire repairs and after tire rotation.

CAUTION

Loss of correct wheel alignment causes the tires to wear on one side and reduces the vehicle's running stability.

Contact your SUBARU dealer if you notice abnormal tire wear.

NOTE

The suspension system is designed to hold each wheel at a certain alignment (relative to the other wheels and to the road) for optimum straight-line stability and cornering performance.

■ Wear Indicators

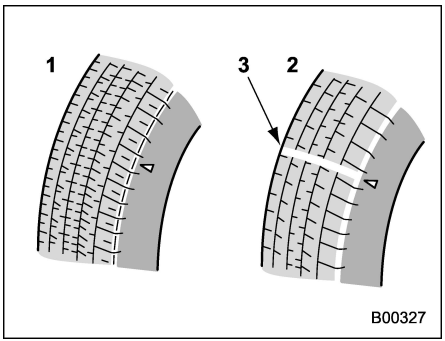

1) New tread
2) Worn tread
3) Tread wear indicator

Each tire incorporates a tread wear indicator, which becomes visible when the depth of the tread grooves decreases to 0.063 in (1.6 mm). A tire must be replaced when the tread wear indicator appears as a solid band across the tread.

⚠ WARNING

When a tire's tread wear indicator becomes visible, the tire is worn beyond the acceptable limit and must be replaced immediately. With a tire in this condition, driving at high speeds in wet weather can cause the vehicle to hydroplane. The resulting loss of vehicle control can lead to an accident.

NOTE

For safety, inspect the tire tread regularly and replace the tires before their tread wear indicators become visible.

■ Rotational Direction of Tires

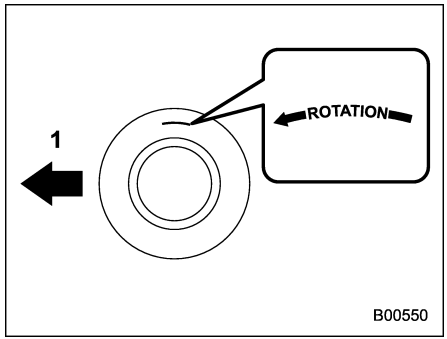

Example of rotational direction marked on the sidewall

1) Front

If the tires have specific rotational direction, refer to the arrow marked on the side wall.

The arrow should be pointing forward direction when the wheels are fitted.

– CONTINUED –

Tire Rotation

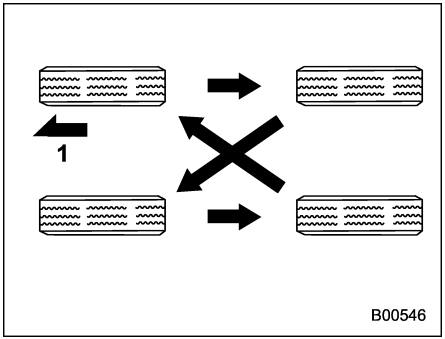

Vehicles equipped with 4 non-unidirectional tires

1) Front

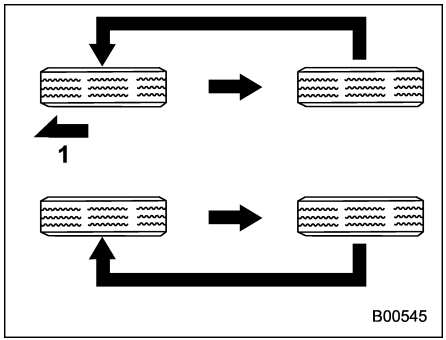

Vehicles equipped with unidirectional tires

1) Front

Tire wear varies from wheel to wheel. Move the tires to the positions shown in the illustration each time they are rotated. For the tire rotation schedule, refer to the "Warranty and Maintenance Booklet."

Replace any damaged or unevenly worn tire at the time of rotation. After tire rotation, adjust the tire pressures and make sure the wheel nuts are correctly tightened.

After driving approximately 600 miles (1,000 km), check the wheel nuts again and retighten any nut that has become loose.

Tire Replacement

The wheels and tires are important and integral parts of your vehicle's design; they cannot be changed arbitrarily. The tires fitted as standard equipment are optimally matched to the characteristics of the vehicle and were selected to give the best possible combination of running performance, ride comfort, and service life. It is essential for every tire to have a size and construction matching those shown on the tire placard and to have a speed symbol and load index matching those shown on the tire placard.

Using tires of a non-specified size detracts from controllability, ride comfort, braking performance, speedometer accuracy and odometer accuracy. It also creates incorrect body-to-tire clearances and inappropriately changes the vehicle's ground clearance.

All four tires must be the same in terms of manufacturer, brand (tread pattern), construction, and size. You are advised to replace the tires with new ones that are identical to those fitted as standard equip-

ment.

For safe vehicle operation, SUBARU recommends replacing all four tires at the same time.

WARNING

- **When replacing or installing tire(s), all four tires must be the same for the following items.**
  (a) Size
  (b) Speed symbol
  (c) Load index
  (d) Circumference
  (e) Construction
  (f) Manufacturer
  (g) Brand (tread pattern)
  (h) Degrees of wear

  For items (a) to (c), you must obey the specification that is printed on the tire placard. The tire placard is located on the driver's door pillar.

  If all four tires are not the same in items (a) to (h), serious mechanical damage could be caused to the drivetrain of the car, and affect the followings.
  - **Ride**
  - **Handling**
  - **Braking**
  - **Speedometer/Odometer calibration**
  - **Clearance between the body and the tires**

  It also may be dangerous and lead to loss of vehicle control, and it can lead to an accident.
- **Use only radial tires. Do not use radial tires together with belted bias tires and/or bias-ply tires. Doing so can dangerously reduce controllability, resulting in an accident.**

■ Wheel Replacement

When replacing wheels due, for example, to damage, make sure the replacement wheels match the specifications of the wheels that are fitted as standard equipment. Replacement wheels are available from SUBARU dealers.

WARNING

Use only those wheels that are specified for your vehicle. Wheels not meeting specifications could interfere with brake caliper operation and may cause the tires to rub against the wheel well housing during turns. The resulting loss of vehicle control could lead to an accident.

11-18. Alloy Wheels

Alloy wheels can be scratched and damaged easily. Handle them carefully to maintain their appearance, performance, and safety.

- When any of the wheels is removed and replaced for tire rotation or to change a flat, always check the tightness of the wheel nuts after driving approximately 600 miles (1,000 km). If any nut is loose, tighten it to the specified torque.
- Never apply oil to the threaded parts, wheel nuts, or tapered surface of the wheel.
- Never let the wheel rub against sharp protrusions or curbs.
- When wheel nuts, balance weights, or the center cap is replaced, be sure to replace them with genuine SUBARU parts designed for alloy wheels.

11-19. Windshield Washer Fluid

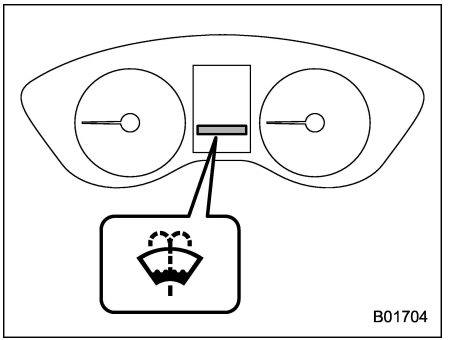

Windshield washer fluid warning light

When there is only a small amount of washer fluid remaining, the windshield washer fluid warning light will appear. When this occurs, refill the washer fluid as follows.

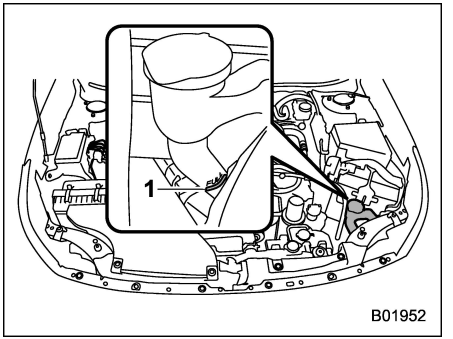

1) “FULL” mark

Remove the washer tank filler cap, then add fluid until it reaches the “FULL” mark on the tank.

Use windshield washer fluid. If windshield washer fluid is unavailable use clean water.

In areas where water freezes in winter, use an anti-freeze type windshield washer fluid.

CAUTION

Never use engine coolant as washer fluid because it could cause paint damage.

If you fill the windshield washer tank with a fluid with a different concentration from the

one used previously, purge the old fluid from the piping between the windshield washer tank and washer nozzles by operating the washer for a certain period of time. Otherwise, if the concentration of the fluid remaining in the piping is too low for the outside temperature, it may freeze and block the nozzles.

CAUTION

- **Adjust the washer fluid concentration appropriately for the outside temperature. If the concentration is inappropriate, sprayed washer fluid may freeze on the windshield and obstruct your view, and the fluid may freeze in the windshield washer tank.**
- **State or local regulations on volatile organic compounds may restrict the use of methanol, a common windshield washer antifreeze additive. Washer fluids containing non-methanol antifreeze agents should be used only if they provide cold weather protection without damaging your vehicle's paint, wiper blades or washer system.**

11-20. Replacement of Wiper Blades

Grease, wax, insects, or other materials on the windshield or the wiper blade results in jerky wiper operation and streaking on the glass. If you cannot remove the streaks after operating the windshield washer or if the wiper operation is jerky, clean the outer surface of the windshield (or rear window) and the wiper blades using a sponge or soft cloth with a neutral detergent or mild abrasive cleaner. After cleaning, rinse the windshield and wiper blades with clean water. The windshield is clean if beads do not form when you rinse the windshield with water.

CAUTION

- **Do not clean the wiper blades with gasoline or a solvent, such as paint thinner or benzine. This will cause deterioration of the wiper blades.**
- **When you wish to raise the passenger-side wiper arm, first raise the driver-side wiper arm. Otherwise, the passenger-side wiper assembly and driver-side wiper assembly will touch each other, possibly resulting in scratches.**
- **Return the passenger-side wiper arm to its original position before returning the driver-side wiper arm to its original position. Otherwise, the passenger-side wiper assembly and driver-side wiper assembly will touch each other, possibly resulting in scratches.**
- **When returning the raised wipers to the original positions, return the wipers slowly on the windshield by hand. Returning the wipers from the detached positions by the spring operation might change the shape of the wiper arm or scratch the windshield.**
- **While removing the wiper blades from the wiper arms, do not return the wiper arms to the original positions. Otherwise, the windshield surface may be scratched.**

If you cannot eliminate the streaking even after following this method, replace the wiper blades using the following procedures.

– CONTINUED –

■ Windshield Wiper Blade Assembly

NOTE

Do not lower the wiper arm while the wiper blade assembly is removed.

1. Raise the wiper arm off the windshield. First raise the driver's side wiper arm and then raise the front passenger's side wiper arm.

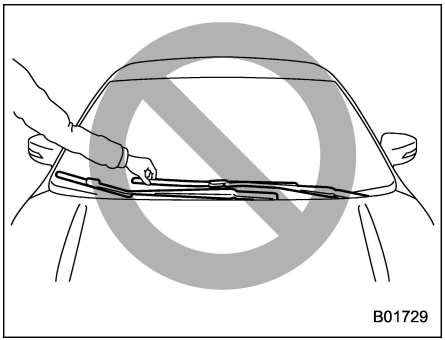

⚠ CAUTION

Hold the wiper arm when replacing the wiper blade. Holding the wiper blade, may result in blade deformation.

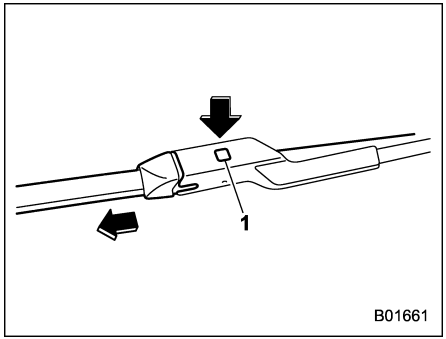

1) Lock knob

2. Hold the wiper blade connection by hand, push the lock knob to release the lock, and then pull out the wiper blade assembly.

NOTE

Do not use a hard object to push the lock knob. The lock knob may be scratched.

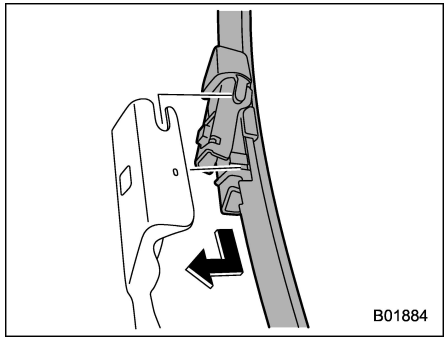

3. When installing the wiper blade assembly, align it with the wiper arm connection part and then slide it in the opposite direction of removal to install. After installing the wiper blade assembly, check that the connection part is locked completely.
4. Hold the wiper arm by hand and slowly lower it in position.

■ Window Wiper Blade Rubber

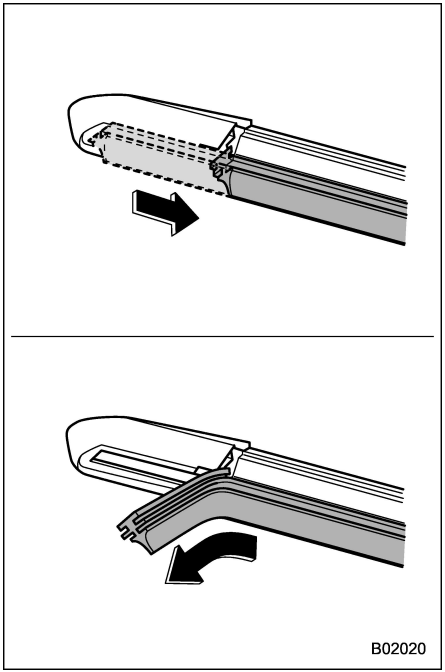

Replace the wiper blade rubber according to the following procedure.

1. Pull the wiper blade rubber until the slit on the underside of the wiper blade is in the removal position, as shown in the illustration, so that it can be removed.
2. Pull the end of the wiper blade rubber through the slit to remove it.
3. To install a new wiper blade rubber, perform the removal procedure in the reverse order. After installation, check that the tip of the wiper rubber has reached the end of the cap.

NOTE

It may be difficult to perform the wiper blade rubber replacement. We recommend that you contact your SUBARU dealer for wiper blade rubber replacement if necessary.

■ Rear Window Wiper Blade Assembly (Outback)

1. Raise the wiper arm off the rear window.

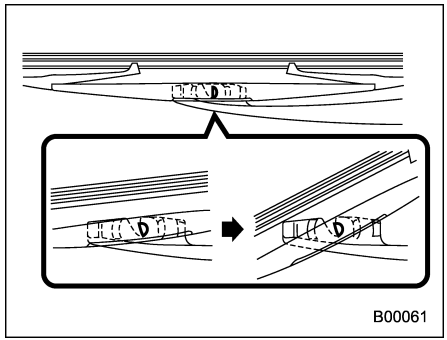

2. Turn the wiper blade assembly counterclockwise.

– CONTINUED –

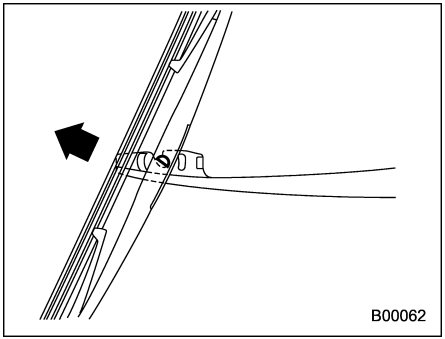

3. Pull the wiper blade assembly toward you to remove it from the wiper arm.

■ Rear Window Wiper Blade Rubber (Outback)

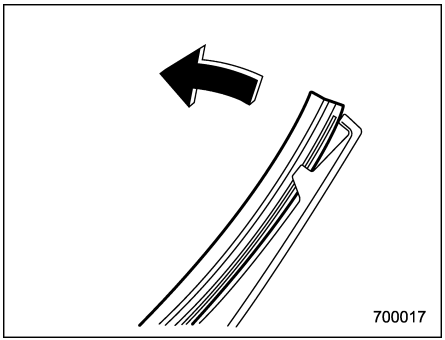

1. Pull out the end of the blade rubber assembly to unlock it from the plastic support.

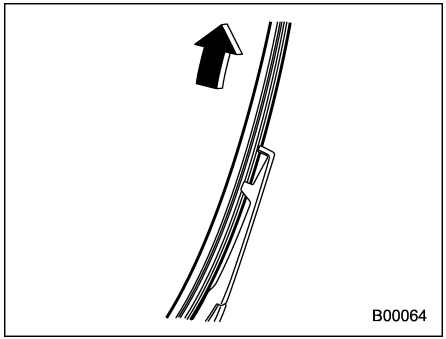

2. Pull the blade rubber assembly out of the plastic support.

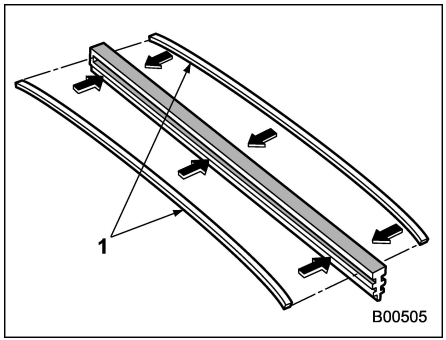

1) Metal spines

3. If the new blade rubber is not provided with two metal spines, remove the metal spines from the old blade rubber and install them in the new blade rubber.

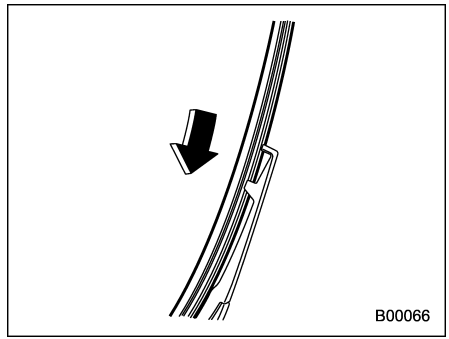

4. Align the claws of the plastic support with the grooves in the blade rubber assembly, then slide the blade rubber assembly into place.

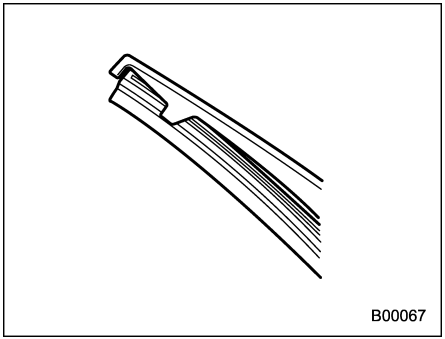

Securely retain both ends of the rubber with the stoppers on the plastic support ends. If the rubber is not retained properly, the wiper may scratch the rear window glass.

5. Install the wiper blade assembly to the wiper arm. Make sure that it locks in place.
6. Hold the wiper arm by hand and slowly lower it in position.

11-21. Battery

WARNING

- **Before beginning work on or near any battery, be sure to extinguish all cigarettes, matches, and lighters. Never expose a battery to an open flame or electric sparks. Batteries give off a gas which is highly flammable and explosive.**
- **For safety, in case an explosion does occur, wear eye protection or shield your eyes when working near any battery. Never lean over a battery.**
- **Do not let battery fluid contact eyes, skin, fabrics, or paint because battery fluid is a corrosive acid. If battery fluid gets on your skin or in your eyes, immediately flush the area with water thoroughly. Seek medical help immediately if acid has entered the eyes.**

  If battery fluid is accidentally swallowed, immediately drink a large amount of milk or water, and seek medical attention immediately.
- **To lessen the risk of sparks, remove rings, metal watchbands, and other metal jewelry. Never allow metal tools to contact the positive battery terminal and anything connected to it WHILE you are at the same time in contact with any other metallic portion of the vehicle because a short circuit will result.**
- **Keep everyone including children away from the battery.**
- **Charge the battery in a well-ventilated area.**
- **Battery posts, terminals, and related accessories contain lead and lead compounds, chemicals known to the State of California to cause cancer and reproductive harm. Batteries also contain other chemicals known to the State of California to cause cancer. Wash hands after handling.**

CAUTION

Never use more than 10 amperes when charging the battery because it will shorten battery life.

– CONTINUED –

It is unnecessary to periodically check the battery fluid level or periodically refill with distilled water.

11-22. Fuses

CAUTION

Never replace a fuse with one having a higher rating or with material other than a fuse because serious damage or a fire could result.

The fuses are designed to melt during an overload to prevent damage to the wiring harness and electrical equipment. The fuses are located in two fuse boxes.

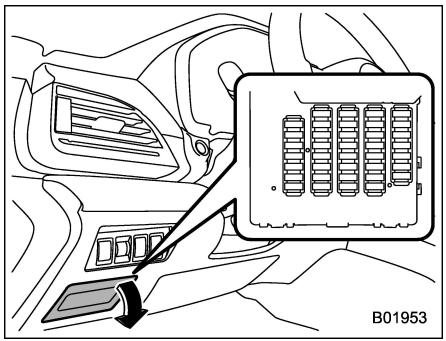

One is located under the instrument panel behind the fuse box cover on the driver's seat side. To remove the cover, pull it out.

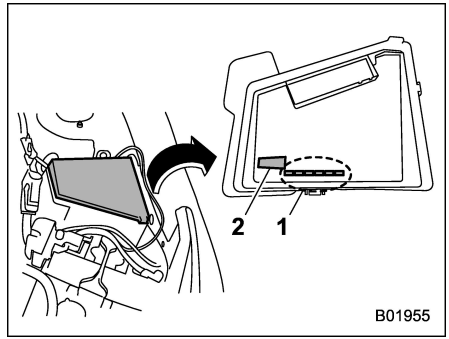

1) Spare fuses
2) Fuse puller

The other one (main fuse box) is housed in the engine compartment. Also, the spare fuses and fuse puller are stored in the fuse box cover.

Pinch the upper part of the fuse puller when removing it from the main fuse box.

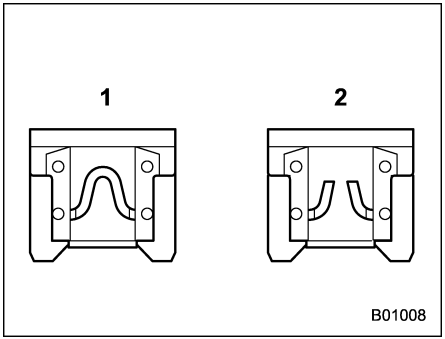

1) Good
2) Blown

If any lights, accessories or other electrical controls do not operate, inspect the corresponding fuse. If a fuse has blown, replace it.

1. Turn the ignition switch to the “LOCK”/ “OFF” position and turn off all electrical accessories.
2. Remove the fuse box cover.
3. Determine which fuse may be blown. Look at the back side of each fuse box cover and refer to “Fuses and Circuits” ☞P528.

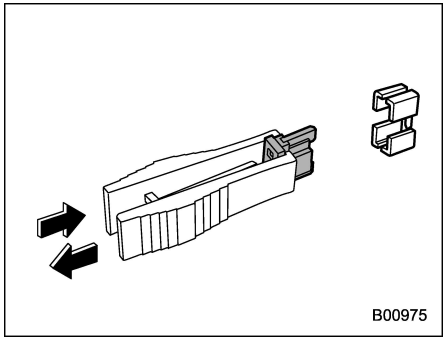

4. Pull out the fuse with the fuse puller.
5. Inspect the fuse. If it has blown, replace it with a spare fuse of the same rating.
6. If the same fuse blows again, this indicates that its system has a problem. Contact your SUBARU dealer for repairs.

11-23. Installation of Accessories

Always consult your SUBARU dealer before installing fog lights or any other electrical equipment in your vehicle. Such accessories may cause the electronic system to malfunction if they are incorrectly installed or if they are not suited for the vehicle. We recommend that you install only genuine SUBARU accessories on your vehicle.

11-24. Replacing Bulbs

WARNING

Bulbs may become very hot while illuminated. Before replacing bulbs, turn off the lights and wait until the bulbs cool down, Otherwise, there is the risk of sustaining a burn injury.

CAUTION

Replace any bulb only with a new bulb of the specified wattage. Using a bulb of different wattage could result in a fire. For the specified wattage of each bulb, refer to "Bulb Chart" ☞P532. For replacement, contact your SUBARU dealer.

■ Headlights (Models with LED Headlights)

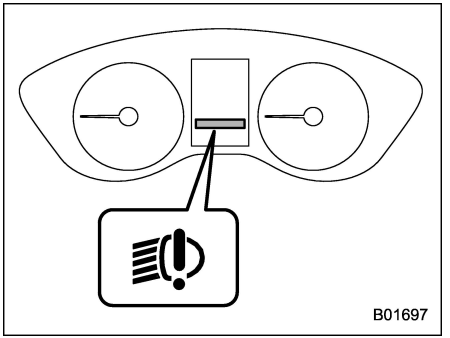

The LED headlight warning light illuminates if the LED headlights malfunction.

Have your vehicle inspected at a SUBARU dealer as soon as possible.

■ Front Turn Signal Light

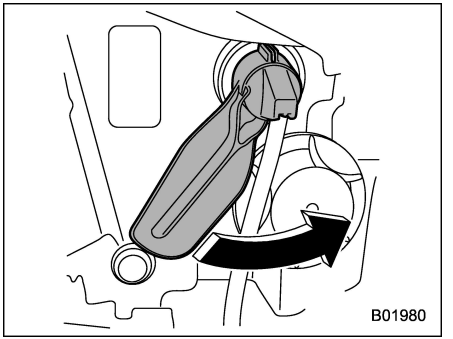

Right-hand side

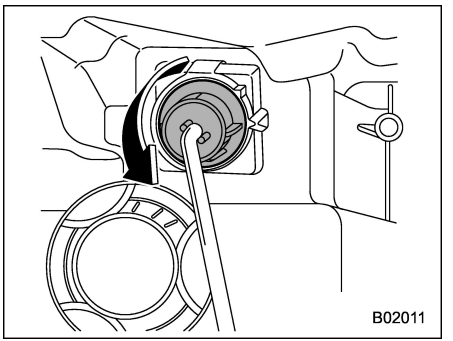

Left-hand side

1. Turn the socket counterclockwise and pull it out.

2. Pull out the bulb from the socket and replace the bulb with a new one.

■ Rear Combination Lights

▼ Legacy

NOTE

It may be difficult to replace the bulbs. We recommend that you have the bulbs replaced by your SUBARU dealer if necessary.

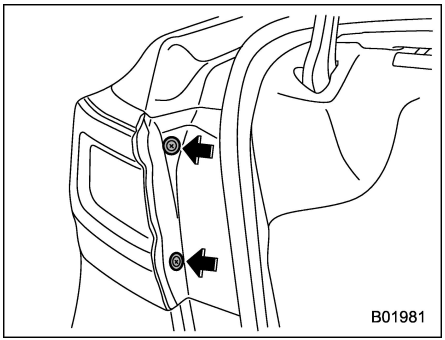

1. Undo the clips. For the method to undo the clips, refer to “Type C clips” ☞P476.

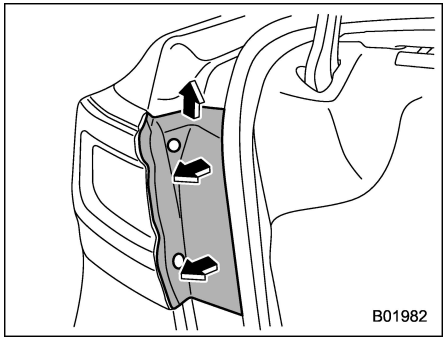

2. Remove the side cover.

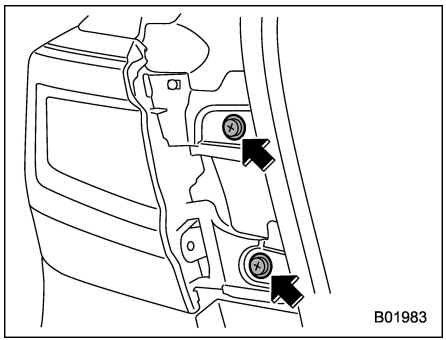

3. Remove the upper and lower screws.

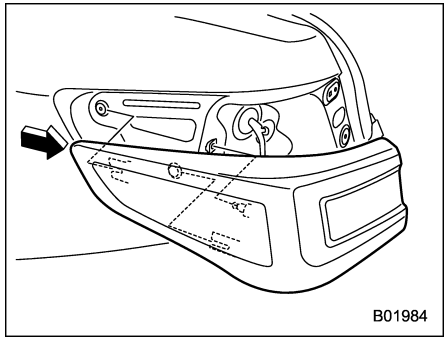

4. Slide the rear combination light assembly straight rearward and remove it from the vehicle.

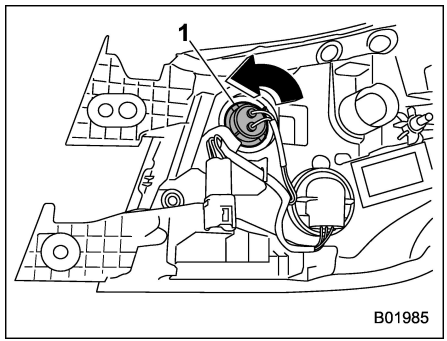

1) Rear turn signal light

5. Remove the bulb holder from the rear combination light assembly by turning it

– CONTINUED –

counterclockwise.

6. Pull the bulb out of the bulb holder and replace it with a new one.

7. Set the bulb holder into the rear combination light assembly and turn it clockwise until it locks.

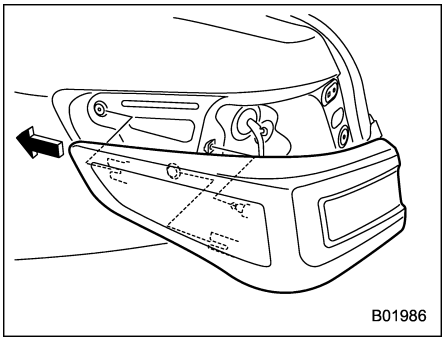

8. Reinstall the rear combination light assembly by sliding the two-pronged part of the combination light assembly securely to each holder of the vehicle side.

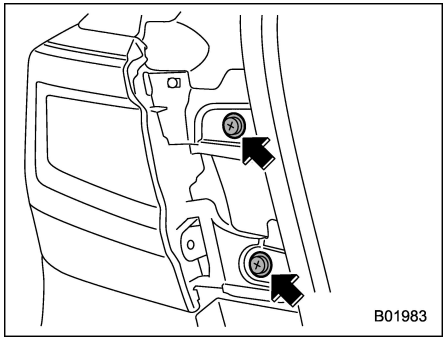

9. Tighten the upper and lower screws.

10. Reinstall the side cover.

▼ Outback

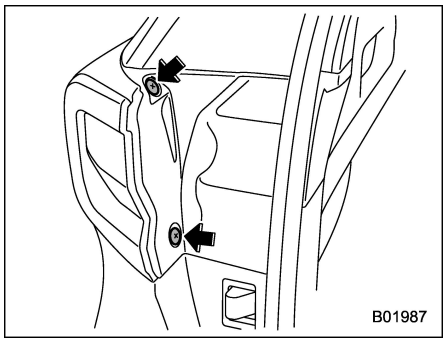

1. Undo the clips. For the method to undo the clips, refer to “Type C clips” ☞P476.

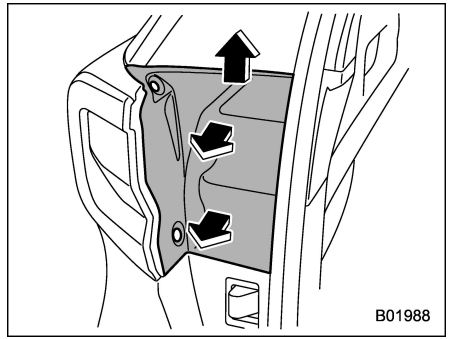

2. Remove the side cover.

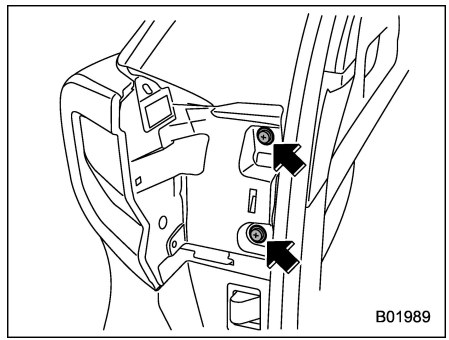

3. Remove the upper and lower screws.

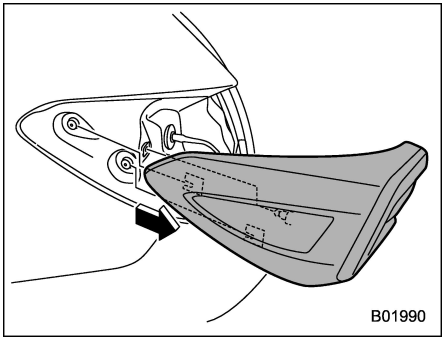

4. Slide the rear combination light assembly straight rearward and remove it from the vehicle.

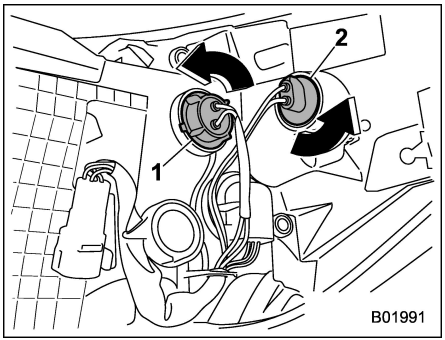

1) Rear turn signal light
2) Rear side marker light

5. Remove the bulb holder from the rear combination light assembly by turning it counterclockwise.
6. Pull the bulb out of the bulb holder and replace it with a new one.
7. Set the bulb holder into the rear combination light assembly and turn it clockwise until it locks.

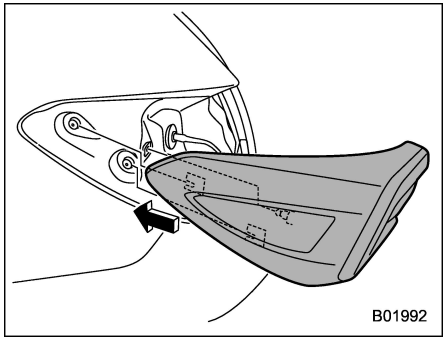

8. Reinstall the rear combination light assembly by sliding the two-pronged part of the combination light assembly securely to each holder of the vehicle side.

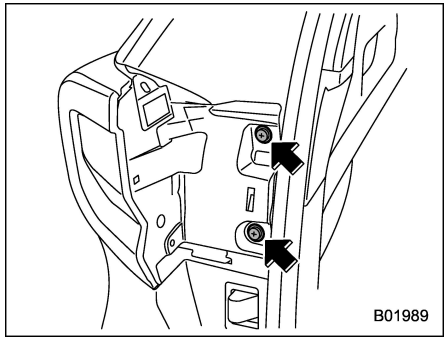

9. Tighten the upper and lower screws.
10. Reinstall the side cover.

■ Backup Light

▼ Legacy

NOTE

It may be difficult to replace the bulbs. We recommend that you have the bulbs replaced by your SUBARU dealer if necessary.

1. Open the trunk.

– CONTINUED –

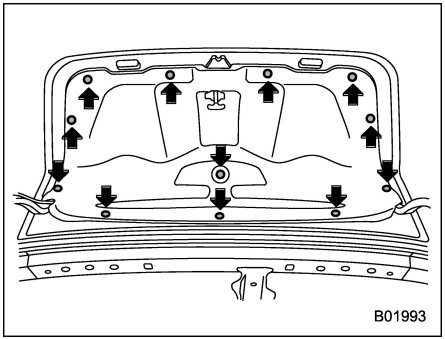

2. Remove the trunk trim lining by removing the clips indicated in the illustration.

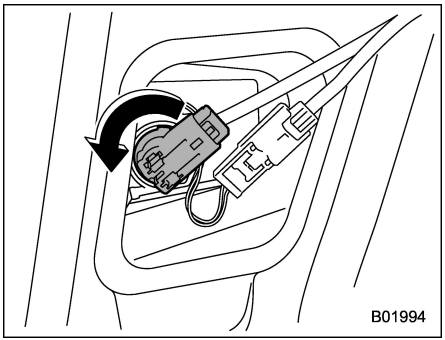

3. Turn the bulb socket counterclockwise and remove it.
4. Pull the bulb out of the bulb socket and replace it with a new one.
5. Install the bulb socket by turning it clockwise.
6. Reconnect the electrical connector.
7. Reinstall the trunk trim lining.

▼ Outback

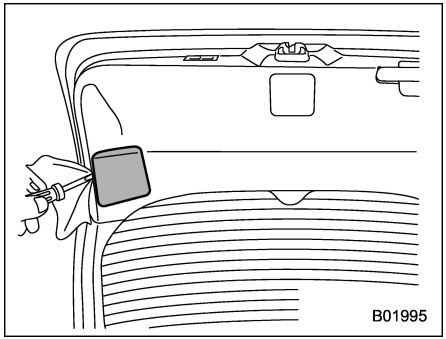

1. Apply a flat-head screwdriver to the light cover as shown in the illustration, and pry the light cover off from the rear gate trim.

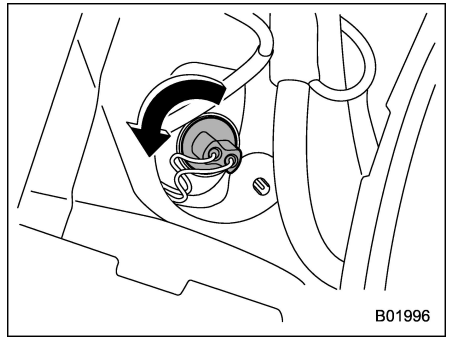

2. Turn the bulb socket counterclockwise and remove it.

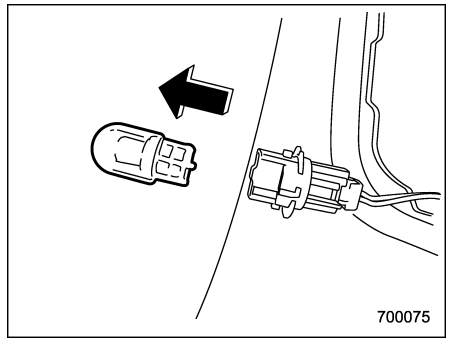

3. Pull the bulb out of the bulb socket and replace it with a new one.
4. Install the bulb socket by turning it clockwise.

5. Install the light cover on the rear gate.

Dome Light

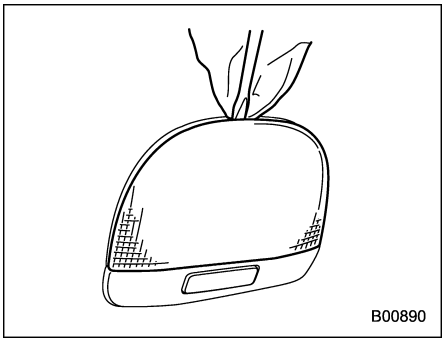

1. Remove the lens by prying the edge of the lens with a flat-head screwdriver.

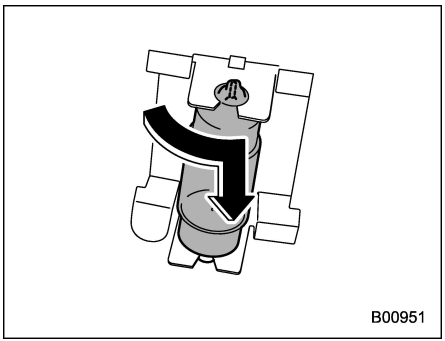

2. Turn the bulb until the flat surfaces at its ends are aligned vertically.
3. Pull the bulb straight downward to remove it.
4. Install a new bulb.
5. Reinstall the lens.

Map Lights

CAUTION

Replacing the bulb could cause burns since the bulb may be very hot. Have the bulb replaced by your SUBARU dealer.

Door Step Light

CAUTION

Replacing the bulb could cause a short circuit. Have the bulb replaced by your SUBARU dealer.

Cargo Area Light (Outback)

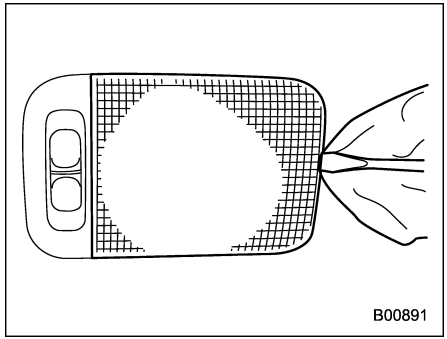

1. Remove the lens by prying the edge of the lens with a flat-head screwdriver.

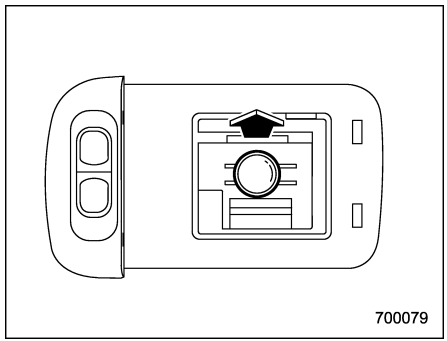

2. Pull the bulb out of the socket.
3. Install a new bulb.

– CONTINUED –

4. Reinstall the lens.

■ Trunk Light (Legacy)

⚠ CAUTION

Replacing the bulb could cause burns since the bulb may be very hot. Have the bulb replaced by your SUBARU dealer.

■ Other Bulbs

It may be difficult to replace the bulbs. We recommend that you have the bulbs replaced by your SUBARU dealer if necessary.

11-25. Replacing Battery

The access key fob/transmitter battery may be discharged under the following conditions.

- The operation of the keyless access function is unstable
- The operating distance of the remote keyless entry system is unstable
- The transmitter does not operate properly when used within the standard distance

Replace the battery with a new one.

⚠ CAUTION

- **Do not let dust, oil or water get on or in the access key fob/transmitter when replacing battery.**
- **Be careful not to damage the printed circuit board in the access key fob/transmitter when replacing the battery.**
- **Be careful not to allow children to touch the battery and any removed parts; children could swallow them.**
- **There is a danger of an explosion if the battery is incorrectly replaced. Replace only with the same or equivalent type of the battery.**
- **Batteries shall not be exposed to excessive heat such as bright sunlight, fire or the like.**

NOTE

- **Replace only with the same or equivalent type of battery recommended by the manufacturer.**
- **Dispose of used batteries according to the local laws.**
- **Mount the battery in the correct orientation to prevent fluid leakage. Be careful not to bend the terminals. It may result in a malfunction.**
- **It is recommended that the battery should be replaced by a SUBARU dealer.**
- **Use a new battery.**
- **After replacing the battery, confirm that the access key fob/transmitter functions properly.**

Replacing Battery of Access Key Fob

CAUTION

- **When removing or fitting the access key fob cover, make sure that the plastic part does not come off or become misaligned.**
- **Before replacing the battery, remove any static electricity.**

Battery: Button battery CR2032 or equivalent

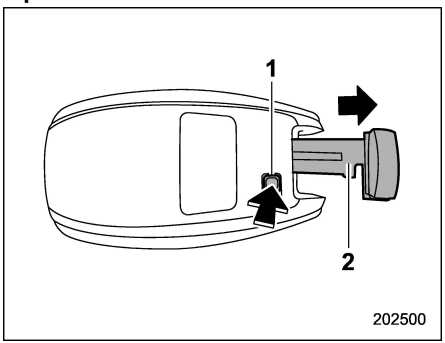

1) Release button
2) Emergency key

1. Take out the emergency key.

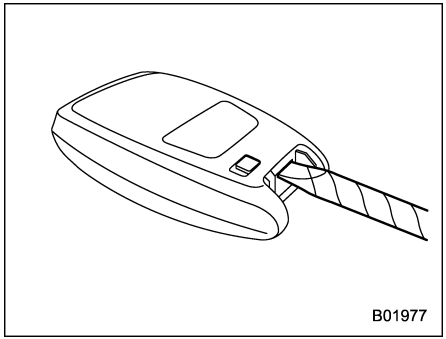

2. Wrap a flat-head screwdriver with vinyl tape or a cloth, and insert it in the gap to remove the cover.

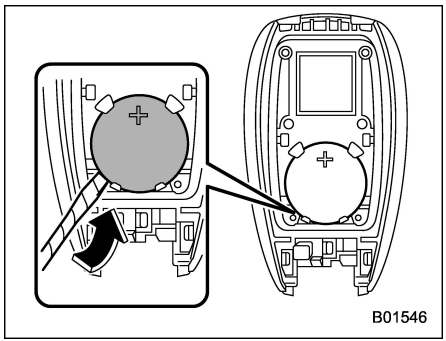

3. Take out the battery using a flat-head screwdriver with vinyl tape or a cloth.

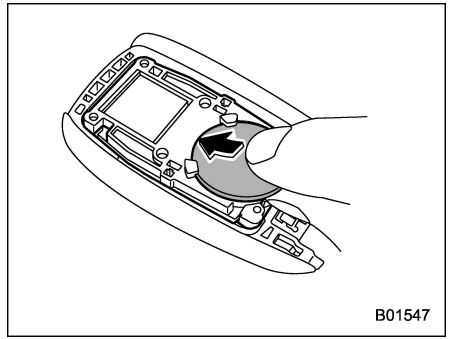

4. Insert a new battery with its positive (+) side facing upward as shown in the figure.

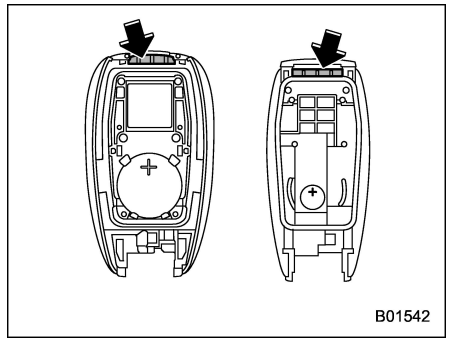

5. Attach the cover to the access key fob by fitting the projections and recesses together.

– CONTINUED –

■ Replacing Battery of Transmitter

⚠ CAUTION

Before replacing the battery, remove any static electricity.

Battery: Button battery CR1620 or equivalent

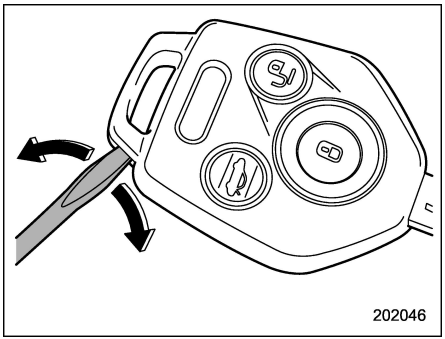

1. Open the key head using a flat-head screwdriver.

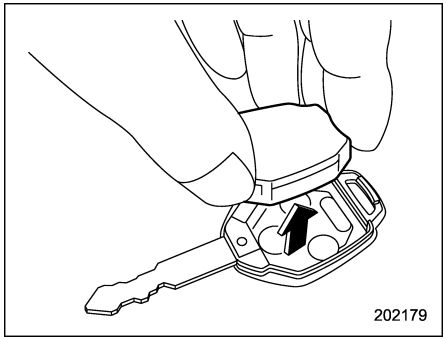

2. Remove the transmitter case from the key head.

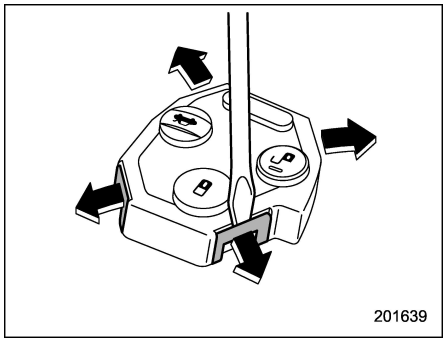

3. Open the transmitter case by releasing the hooks.

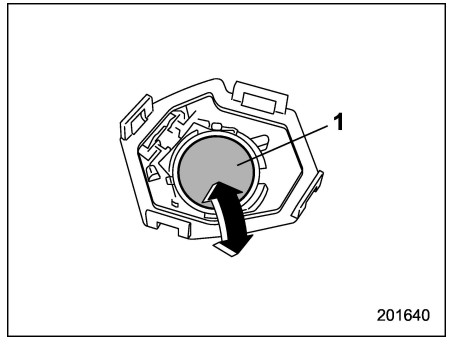

1) Negative (−) side facing up

4. Replace the old battery with a new battery (type **CR1620** or equivalent) making sure to install the new battery with the negative (−) side facing up.
5. Put together the transmitter case by fitting the hooks on the case.
6. Reinstall the transmitter case in the key head.
7. Refit the removed half of the key head.

After the battery is replaced, the transmitter must be synchronized with the remote keyless entry system's control unit. Press either the "🔒" or "🔓" button six times to synchronize the unit.

12-1. Specifications 520
Dimensions 520
Engine 521
Fuel 521
Engine Oil 522
Front Differential and Rear Differential Gear Oil ... 524
Fluids 525
Engine Coolant 525
Electrical System 526
Tires 526
Brake Pedal 527
Brake Disc 527
Brake Pad 527
12-2. Fuses and Circuits 528
Fuse Panel Located in the Passenger Compartment 528
Main Fuse Panel Located in the Engine Compartment 530
12-3. Bulb Chart 532
Safety Precautions 532
Bulb Chart 533
12-4. Vehicle Identification 535
12-5. Function Settings 536
Function Settings and Adjustments on the Center Information Display 536
Individual Settings and Adjustments Excluding Center Information Display 536
Function Settings and Adjustments Performed by a Dealer 536

12-1. Specifications

These specifications are subject to change without notice.

■ Dimensions

in (mm)

Item		Legacy		Outback	
		2.5 L	2.4 L	2.5 L	2.4 L
Drive system		AWD			
Transmission type		CVT			
Overall length		190.6 (4,840)		191.3 (4,860)	
Overall width		72.4 (1,840)		73.0 (1,855)	
Overall height		59.1 (1,500)		66.1 (1,680)	
Wheelbase		108.3 (2,750)		108.1 (2,745)	
Tread	Front	62.2 (1,580)		61.8 (1,570)	
	Rear	63.4 (1,610)		62.8 (1,595)	
Ground clearance*1		5.9 (150)		8.7 (220)	

*1: Measured with vehicle empty
CVT: Continuously variable transmission
AWD: All-Wheel Drive

Engine

Engine model	FB25 (2.5 L, DOHC, non-turbo)	FA24 (2.4 L, DOHC, turbo)
Engine type	Horizontally opposed, liquid cooled 4 cylinder, 4 stroke direct injection gasoline engine	Horizontally opposed, liquid cooled 4 cylinder, 4-stroke direct injection gasoline engine
Displacement cu-in (cc)	152 (2,498)	146 (2,387)
Bore × Stroke in (mm)	3.70 × 3.54 (94.0 × 90.0)	3.70 × 3.39 (94.0 × 86.0)
Compression ratio	12.0 : 1	10.6 : 1
Firing order	1 – 3 – 2 – 4	1 – 3 – 2 – 4

Fuel

Fuel requirement	Fuel tank capacity
Unleaded gasoline with **87 AKI (90 RON) or higher**	18.5 US gal (70 liters, 15.4 Imp gal)

– CONTINUED –

■ Engine Oil

For the checking, adding and replacing procedure or other details, refer to “Engine Oil” ☞P481.

NOTE

The procedure for changing the engine oil and oil filter should be performed by a properly-trained expert. It is recommended that you have this service performed by your SUBARU dealer.

▼ Approved engine oil

Always use the SUBARU approved engine oil. For further details, please contact your SUBARU dealer.
If the approved engine oil is unavailable, use the alternative engine oil described on the next page.

▼ Alternative engine oil

If the SUBARU approved oil is unavailable, the following alternative oil can be used.

NOTE

- **Each quantity indicated is only a guideline. The necessary quantity for replacement may differ slightly depending on the temperature and other factors.**
- **In choosing an oil, you want the proper quality and viscosity, as well as one that will enhance fuel economy. Oils of lower viscosity provide better fuel economy. However, in hot weather, oil of higher viscosity is required to properly lubricate the engine. The following table lists the recommended viscosities and applicable temperatures.**
- **When adding oil, different brands may be used together as long as they are the same API classification and SAE viscosity as those recommended by SUBARU.**

Oil grade	SAE viscosity No. and applicable temperature	Engine oil capacity
API SERVICE SN SAE XW-XX RESOURCE CONSERVING SN PLUS ZOM0754 API (American Petroleum Institute) classification **SN** with the words “RESOURCE CONSERVING” or **SN PLUS** with the words “RESOURCE CONSERVING” **or** AMERICAN PETROLEUM INSTITUTE FOR GASOLINE ENGINES CERTIFIED ZOM0293 ILSAC (International Lubricant Specification Advisory Committee) **GF-5**, which can be identified with the ILSAC certification mark (Starburst mark)	**0W-20 synthetic** oil is the required oil for optimum engine performance and protection. Conventional oil may be used if synthetic oil is unavailable. *: If 0W-20 synthetic oil is not available, 5W-30 conventional oil may be used if you need to add oil. However, you should change to 0W-20 synthetic oil at the next oil change. ˚C -30 -20 -10 0 10 20 30 40 ˚F -20 0 20 40 60 80 100 0W-20* ZOM0294	**2.5 L models** – Adding the oil from low level to full level: 1.1 US qt (1.0 liter, 0.9 Imp qt) – Changing the oil and oil filter: 4.4 US qt (4.2 liters, 3.7 Imp qt) **2.4 L models** – Adding the oil from L to F level: 1.1 US qt (1.0 liter, 0.9 Imp qt) – Changing the oil and oil filter: 4.8 US qt (4.5 liters, 4.0 Imp qt)

– CONTINUED –

■ Front Differential and Rear Differential Gear Oil

Oil	Front differential gear oil	Rear differential gear oil
Oil grade	● SUBARU Extra MT*3 ● API classification GL-5 (75W-90)*4	2.5 L models and 2.4 L for Legacy: SUBARU Extra MT*3 or API classification GL-5 (75W-90*4) 2.4 L for Outback: API classification GL-5 (75W-90*3 or 90*4)
SAE viscosity No. and applicable temperature	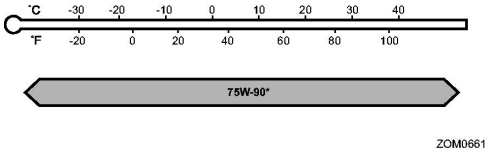	● 75W-90* ● 90 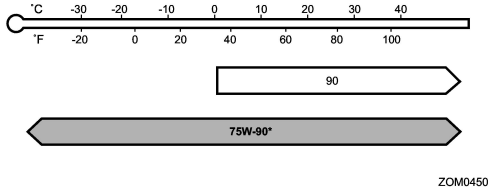 *: Recommended
Oil capacity*1	1.3 US qt (1.2 liters, 1.1 Imp qt)	0.8 US qt (0.8 liters, 0.7 Imp qt)
Remarks*2	“Front Differential Gear Oil and Rear Differential Gear Oil” ☞P489	“Front Differential Gear Oil and Rear Differential Gear Oil” ☞P489

*1: The indicated oil quantity is only a guideline. The necessary quantity for replacement may differ slightly depending on the temperature and other factors. After refilling the gearbox with oil, the oil level should be checked.
*2: For more details about maintenance and service, refer to the indicated section.
*3: The vehicle is filled at the factory with this type of differential gear oil.
*4: You may use this type of differential gear oil. However, using this type of oil will detract from fuel efficiency.

■ Fluids

Fluid	Fluid type*1	Fluid capacity*2	Remarks*3
Continuously variable transmission fluid	Consult your SUBARU dealer.	2.5 L models: · Legacy: 11.9 US qt (11.3 liters, 9.9 Imp qt) · Outback: 12.4 US qt (11.7 liters, 10.3 Imp qt) 2.4 L models: · Legacy: 12.3 US qt (11.6 liters, 10.2 Imp qt) · Outback: 12.6 US qt (11.9 liters, 10.5 Imp qt)	"Continuously Variable Transmission Fluid" ☞P489
Brake fluid	FMVSS No. 116, DOT 3 or DOT 4 brake fluid	—	"Brake Fluid" ☞P490

*1: Use one of the indicated types of fluid.
*2: The indicated fluid quantity is only a guideline. The necessary quantity for replacement may differ slightly depending on the temperature and other factors.
*3: For more details about maintenance and service, refer to the indicated section.

■ Engine Coolant

Vehicle model	Coolant capacity	Coolant type
2.5 L models	9.5 US qt (9.0 liters, 7.9 Imp qt)	SUBARU Super Coolant
2.4 L models	9.2 US qt (8.7 liters, 7.7 Imp qt)	

The indicated coolant quantity is only a guideline. The necessary quantity for replacement may differ slightly depending on the temperature and other factors. For more details about maintenance and service, refer to "Cooling System" ☞P484.

– CONTINUED –

■ Electrical System

Battery type		LN2
Alternator		2.5 L models: 12 V-150 A 2.4 L models: 12 V-190 A
Spark plugs	2.5 L models	DILKAR7Q8 (NGK)
	2.4 L models	SILKFR8A6 (NGK)

■ Tires

Item		Legacy		Outback	
Tire size		225/55R17 97V	225/50R18 95V	225/65R17 102H	225/60R18 100H
Wheel size		17 × 7J 17 × 7 1/2J	18 × 7 1/2J	17 × 7J	18 × 7J
Pressure	Front	33 psi (230 kPa, 2.3 kgf/cm^2)		35 psi (240 kPa, 2.4 kgf/cm^2)	
	Rear	32 psi (220 kPa, 2.2 kgf/cm^2)		33 psi (230 kPa, 2.3 kgf/cm^2)	
Temporary spare tire/ Conventional tire	Size	T155/70 D17 110M		T155/80 D17 101M*2 225/60 R18 100H*3	
	Pressure	60 psi (420 kPa, 4.2 kgf/cm^2)		60 psi (420 kPa, 4.2 kgf/cm^2)*2 Front: 35 psi (240 kPa, 2.4 kgf/cm^2)*3 Rear: 33 psi (230 kPa, 2.3 kgf/cm^2)*3	
Wheel nut tightening torque		88.5 lbf·ft (120 N·m, 12.2 kgf·m)*1			

*1: This torque is equivalent to applying approximately 88 to 110 lbf (40 to 50 kgf) at the end of the wheel nut wrench. If you have tightened the wheel nuts by yourself, have the tightening torque checked at the nearest automotive service facility as soon as possible. For the wheel nut tightening procedure, refer to “Changing a Flat Tire” ☞P444.
*2: Models with temporary spare tire
*3: Models with conventional tire

Brake Pedal

in (mm)

Pedal clearance	2.68 (68)*
Pedal free play	0.02 - 0.11 (0.5 - 2.7)

*: Minimum value when pedal is operated with a force of 110 lbf (490 N, 50 kgf)

Brake Disc

If you need information on the usage limit value of brake discs and the method for measuring them, we recommend that you consult your SUBARU dealer.

Brake Pad

in (mm)

Brake pad wear limit	0.06 (1.5)

12-2. Fuses and Circuits

■ Fuse Panel Located in the Passenger Compartment

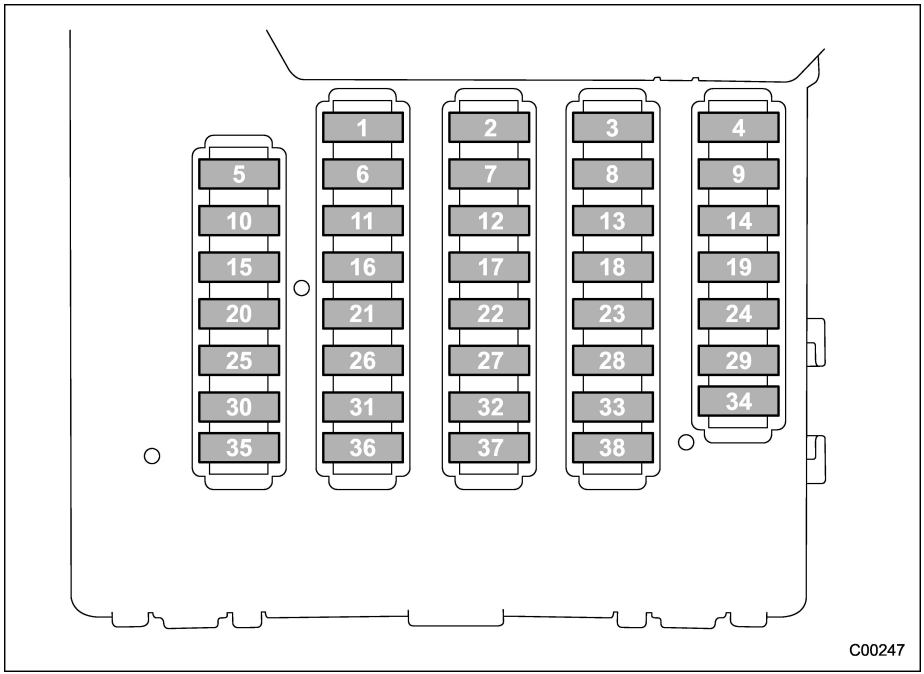

Fuse panel	Fuse rating	Circuit
1	Empty	
2	20 A	CIGAR
3	7.5 A	IG A-1
4	15 A	AUDIO NAVI
5	10 A	IG B-2
6	7.5 A	METER IG (DCDC)
7	20 A	12 V SOCKET
8	10 A	A/C IG
9	7.5 A	ACC
10	7.5 A	IG B-1
11	7.5 A	EYE SIGHT (DCDC)
12	Empty	
13	7.5 A	IG A-3
14	Empty	
15	Empty	
16	7.5 A	UNIT IG (DCDC)
17	7.5 A	MIRROR ACC
18	Empty	
19	10 A	IG A-2

Fuse panel	Fuse rating	Circuit
20	10 A	SRS AIR BAG
21	7.5 A	A/C IG (DCDC)
22	10 A	EYE SIGHT
23	7.5 A	IG A-4
24	7.5 A	A/C ACC (DCDC)
25	7.5 A	UNIT +B (DCDC)
26	10 A	BACK UP
27	15 A	SEAT HTR R
28	20 A	TRAIL R.FOG
29	Empty	
30	7.5 A	BACK UP (DCDC)
31	7.5 A	SMT (DCDC)
32	15 A	MIRROR +B
33	7.5 A	KEY SW A
34	Empty	
35	7.5 A	ILLUMI (DCDC)
36	7.5 A	KEY SW B
37	15 A	UNIT +B1
38	7.5 A	UNIT +B2

– CONTINUED –

Main Fuse Panel Located in the Engine Compartment

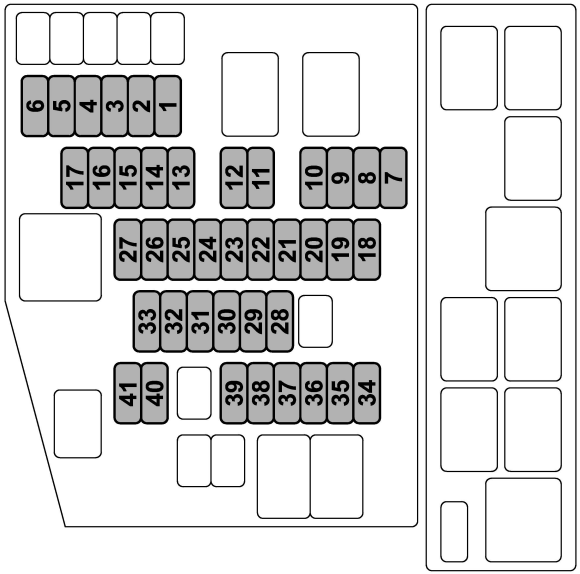

C00398

Fuse panel	Fuse rating	Circuit
1	Empty	
2	7.5 A	OBD
3	7.5 A	STOP
4	10 A	MB-B
5	7.5 A	PU B/UP
6	30 A	JB-B2
7	7.5 A	M/B-IG1
8	7.5 A	M/B-IG2
9	10 A	M/B-IG3
10	7.5 A	M/B-IG4
11	7.5 A	HORN1
12	7.5 A	HORN2
13	10 A	TAIL
14	15 A	HAZARD
15	20 A	D/L
16	20 A	F/P
17	Empty	
18	Empty	
19	10 A	AVCS

Fuse panel	Fuse rating	Circuit
20	15 A	ETC
21	15 A	TCU
22	7.5 A	CVT SSR
23	10 A	E/G2
24	15 A	IG COIL
25	20 A	O2 HTR
26	20 A	DI
27	15 A	E/G1
28	25 A	MAIN FAN
29	15 A	DEICER
30	30 A	VDC SOL
31	15 A	F-END
32	30 A	F.WIP
33	25 A	R.DEF
34	30 A	BACKUP
35	20 A	HTR
36	25 A	SUB FAN
37	15 A	R.WIP
38	20 A	BLOWER
39	20 A	BLOWER
40	10 A	MB-A
41	Empty	

12-3. Bulb Chart

■ Safety Precautions

WARNING

Bulbs may become very hot while illuminated. Before replacing bulbs, turn off the lights and wait until the bulbs cool down. Otherwise, there is a risk of sustaining a burn injury.

CAUTION

Replace any bulb only with a new bulb of the specified wattage. Using a bulb of different wattage could result in a fire.

Bulb Chart

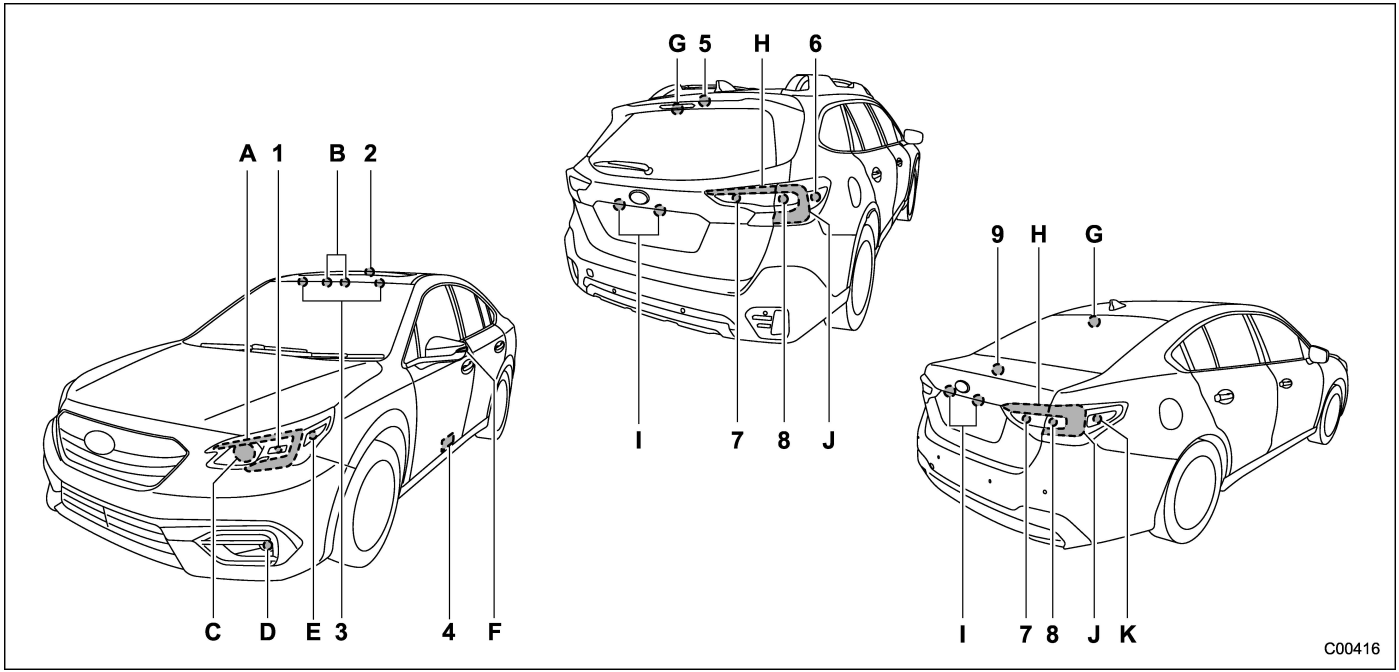

NOTE

Lights A, B, C, D, E, F, G, H, I, J and K are the LED (Light Emitting Diode) type. Consult your SUBARU dealer for replacement.

– CONTINUED –

		Wattage	Bulb No.
1)	Front turn signal lights	12 V-28 W	7444NA
2)	Dome light	12 V-8 W	—
3)	Vanity mirror lights	14 V-1.4 W	HTU
4)	Door step lights (if equipped)	12 V-5 W	W5W
5)	Cargo area light (Outback)	12 V-13 W	SAE #912
6)	Rear side marker lights (Outback)	12 V-5 W	W5W
7)	Backup lights	12 V-16 W	W16W
8)	Rear turn signal lights	12 V-21 W	WY21W
9)	Trunk light (Legacy)	12 V-3.8 W	SAE #194
A)	Front position lights	—	—
	Daytime running lights	—	—
B)	Map lights	—	—
C)	Low and high beam headlights	—	—
D)	Front fog lights (if equipped)	—	—
E)	Front side marker lights	—	—
F)	Side turn signal lights (if equipped)	—	—
G)	High-mounted stop light	—	—
H)	Tail lights (if equipped)	—	—
I)	License plate lights	—	—
J)	Tail and stop lights	—	—
K)	Rear side marker lights (Legacy)	—	—

12-4. Vehicle Identification

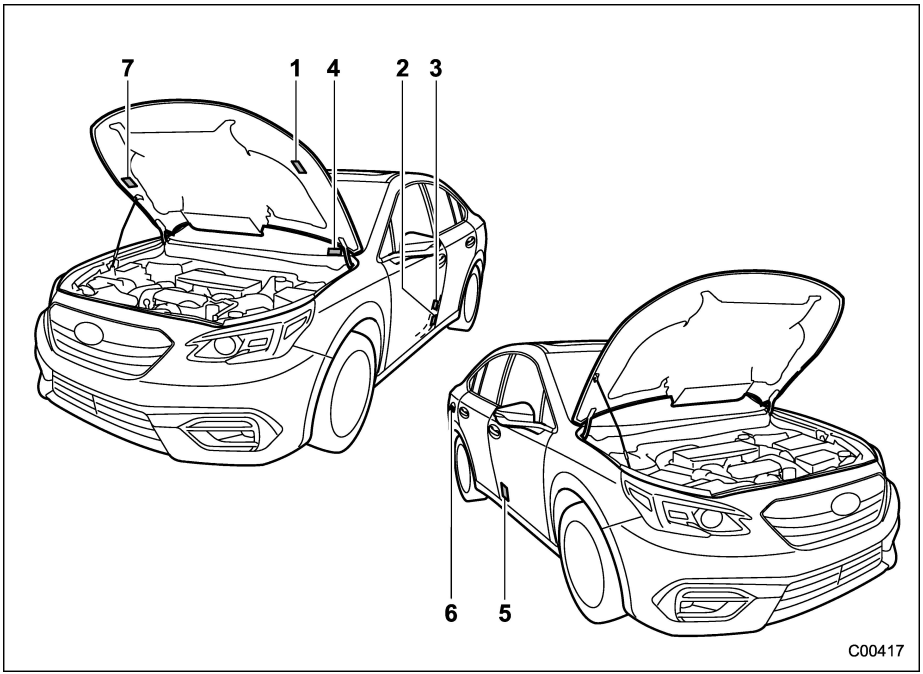

1) Emission control label
2) Certification and bar code label
3) Tire inflation pressure label (tire placard)
4) Vehicle identification number plate
5) Model number label
6) Fuel label
7) Air conditioner label

12-5. Function Settings

■ Function Settings and Adjustments on the Center Information Display

Setting adjustments can be manually changed within the center information display to meet your personal requirements. Refer to “Center Information Display (CID)” ☞P205.

■ Individual Settings and Adjustments Excluding Center Information Display

For setting adjustments to the following items, refer to the appropriate page for details.

Item	Function	Available settings	Factory default setting	Page
Alarm system	Alarm system	Operation/Non-operation	Operation	142
Remote keyless entry system	Audible signal	Operation/Non-operation	Operation	133

■ Function Settings and Adjustments Performed by a Dealer

Item	Function	Available settings	Factory default setting
Alarm system	Monitoring start delay time (after closing doors)	0 seconds/30 seconds	30 seconds
	Map lights/Dome light/Cargo area light (Outback) illumination	ON/OFF	OFF
Keyless access with push-button	Audible signal volume*2	Level 1 to 7	Level 5
	Trunk open without key (Legacy)	ON/OFF	ON
Remote keyless entry system	Audible signal volume*2	Level 1 to 7	Level 5
Remote trunk open/power rear gate open function*1	Operation of trunk opening/power rear gate opening by remote transmitter/access key fob	Non-operation/Pressing twice/Pressing and holding	Pressing and holding
Key lock-in prevention	Key lock-in prevention	Operation/Non-operation	Operation
Battery drainage prevention function	Battery drainage prevention function	Operation/Non-operation	Operation

Item	Function	Available settings	Factory default setting
Auto dimmer cancel	Sensitivity of the operation of the auto dimmer cancel	OFF/Min/Low/Mid/Hi/Max	Mid
High beam assist function*1	High beam assist function	Operation/Non-operation	Operation
Reverse gear interlocked rear wiper*1	Reverse gear interlocked rear wiper operation	Operation/Non-operation	U.S.-spec. models: Non-operation Other models: Operation

*1: If equipped
*2: The audible signal volume cannot be set under level 5 for the warning chime.

Consumer Information and Reporting Safety Defects

13-1. For U.S.A. 540
13-2. Tire Information 540
Tire Labeling 540
Recommended Tire Inflation Pressure 542
Glossary of Tire Terminology 543
Tire Care – Maintenance and Safety Practices 547
Vehicle Load Limit – How to Determine 548
Determining Compatibility of Tire and Vehicle Load Capacities 551
Adverse Safety Consequences of Overloading on Handling and Stopping and on Tires 551
Steps for Determining Correct Load Limit 552
13-3. Uniform Tire Quality Grading Standards 552
TREADWEAR 553
TRACTION AA, A, B, C 553
TEMPERATURE A, B, C 553
13-4. Reporting Safety Defects (USA) 554

13-1. For U.S.A.

The following information has been compiled according to Code of Federal Regulations “Title 49, Part 575”.

13-2. Tire Information

■ Tire Labeling

Many markings (e.g. Tire size, Tire Identification Number or TIN) are placed on the sidewall of a tire by tire manufacturers. These marking can provide you with useful information on the tire.

▼ Tire size

Your vehicle comes equipped with P-Metric tire size. It is important to understand the sizing system in selecting the proper tire for your vehicles. Here is a brief review of the tire sizing system with a breakdown of its individual elements.

▽ P Metric

With the P-Metric system, Section Width is measured in millimeters. To convert millimeters into inches, divide by 25.4. The Aspect Ratio (Section Height divided by Section Width) helps provide more dimensional information about the tire size.

Example:

P	205	/	60	R	16
(1)	(2)		(3)	(4)	(5)

(1) P = Certain tire type used on light duty vehicles such as passenger cars

(2) Section Width in millimeters

(3) Aspect Ratio (= section height ÷ section width).

(4) R = Radial Construction

(5) Rim diameter in inches

▽ Load and Speed Rating Descriptions

The load and speed rating descriptions will appear following the size designation.

They provide two important facts about the tire. First, the number designation is its load index. Second, the letter designation indicates the tire’s speed rating.

Example:

P	205 / 60 R 16	91	V
	Size designation	(6)	(7)

(6) Load Index: A numerical code which specifies the maximum load a tire can carry at the speed indicated by its speed symbol, at maximum inflation pressure.

For example, “91” means 1,356 lbs (615 kg), “90” means 1,323 lbs (600 kg), “89” means 1,279 lbs (580 kg)

WARNING

Load indices apply only to the tire, not to the vehicle. Putting a load rated tire on any vehicle does not mean the vehicle can be loaded up to the tire’s rated load.

(7) Speed Rating: An alphabetical system describing a tire’s capability to travel at established and predetermined speeds.

For example, “V” means 149 mph (240 km/h)

WARNING

- **Speed ratings apply only to the tire, not to the vehicle. Putting a speed rated tire on any vehicle does not mean the vehicle can be operated at the tire’s rated speed.**
- **The speed rating is void if the tires are worn out, damaged, repaired, retreaded, or otherwise altered from their original condition. If tires are repaired, retreaded, or otherwise altered, they may not be suitable for original equipment tire designed loads and speeds.**

▼ Tire Identification Number (TIN)

Tire Identification Number (TIN) is marked on the intended outboard sidewall. The TIN is composed of four groups. Here is a brief review of the TIN with a breakdown of its individual elements.

DOT	XX	XX	XXX	XXXX
	(1)	(2)	(3)	(4)

(1) Manufacturer’s Identification Mark

(2) Tire Size

(3) Tire Type Code

(4) Date of Manufacture

The first two figures identify the week, starting with “01” to represent the first full week of the calendar year; the second two figures represent the year. For example, 0101 means the 1st week of 2001.

▼ Other markings

The following makings are also placed on the sidewall.

▽ Maximum permissible inflation pressure

The maximum cold inflation pressure to which this tire may be inflated. For example, “350 kPa (51 PSI) MAX. PRESS”

– CONTINUED –

▽ Maximum load rating

The load rating at the maximum permissible weight load for this tire. For example, “MAX. LOAD 615 kg (1,356 LBS) @ 350 kPa (51 PSI) MAX. PRESS.”

⚠ WARNING

Maximum load rating applies only to the tire, not to the vehicle. Putting a load rated tire on any vehicle does not mean the vehicle can be loaded up to the tire’s rated load.

▽ Construction type

Applicable construction of this tire.

For example, “TUBELESS STEEL BELTED RADIAL”

▽ Construction

The generic name of each cord material used in the plies (both sidewall and tread area) of this tire.

For example, “PLIES: TREAD 2 STEEL + 2 POLYESTER + 1 NYLON SIDEWALL 2 POLYESTER”

▽ Uniform Tire Quality Grading (UTQG)

For details, refer to “Uniform Tire Quality Grading Standards” ☞P552.

■ Recommended Tire Inflation Pressure

▼ Recommended cold tire inflation pressure

For the recommended cold tire inflation pressure for your vehicle’s tires, refer to “Tires” ☞P526.

▼ Vehicle placard

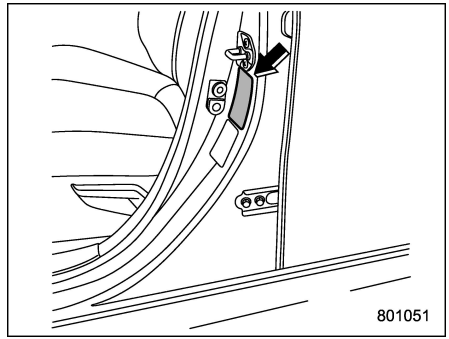

The vehicle placard is affixed to the driver’s side B-pillar.

Example:

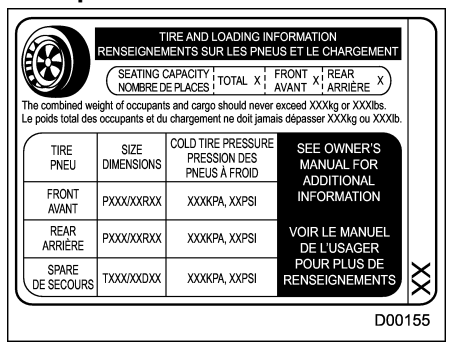

The vehicle placard shows original tire size, recommended cold tire inflation pressure on each tire at maximum loaded vehicle weight, seating capacity and loading information.

▼ **Adverse safety consequences of under-inflation**

Driving at high speeds with excessively low tire pressures can cause the tires to flex severely and to rapidly become hot. A sharp increase in temperature could cause tread separation, and failure of the tire(s). Possible resulting loss of vehicle control could lead to an accident.

▼ **Measuring and adjusting air pressure to achieve proper inflation**

Check and, if necessary, adjust the pressure of each tire (including the spare) at least once a month and before any long journey. Check the tire pressures when the tires are cold. Use a pressure gauge to adjust the tire pressures to the specific values. Driving even a short distance warms up the tires and increases the tire pressures. Also, the tire pressures are affected by the outside temperature. It is best to check tire pressure outdoors before driving the vehicle. When a tire becomes warm, the air inside it expands, causing the tire pressure to increase. Be careful not to mistakenly release air from a warm tire to reduce its pressure.

■ Glossary of Tire Terminology

- **Accessory weight**

The combined weight (in excess of those standard items which may be replaced) of automatic transmission, power steering, power brakes, power windows, power seats, radio, and heater, to the extent that these items are available as factory-installed equipment (whether installed or not).

- **Bead**

The part of the tire that is made of steel wires, wrapped or reinforced by ply cords and that is shaped to fit the rim.

- **Bead separation**

A breakdown of the bond between components in the bead.

- **Bias ply tire**

A pneumatic tire in which the ply cords that extend to the beads are laid at alternate angles substantially less than 90 degrees to the centerline of the tread.

- **Carcass**

The tire structure, except tread and sidewall rubber which, when inflated, bears the load.

- **Chunking**

The breaking away of pieces of the tread or sidewall.

- **Cold tire pressure**

The pressure in a tire that has been driven less than 1 mile or has been standing for three hours or more.

- **Cord**

The strands forming the plies in the tire.

– CONTINUED –

- **Cord separation**

The parting of cords from adjacent rubber compounds.

- **Cracking**

Any parting within the tread, sidewall, or inner liner of the tire extending to cord material.

- **Curb weight**

The weight of a motor vehicle with standard equipment including the maximum capacity of fuel, oil and coolant, and if so equipped, air conditioning and additional weight optional engine.

- **Extra load tire**

A tire designed to operate at higher loads and higher inflation pressure than the corresponding standard tire.

- **Groove**

The space between two adjacent tread ribs.

- **Innerliner**

The layer(s) forming the inside surface of a tubeless tire that contains the inflating medium within the tire.

- **Innerliner separation**

The parting of the innerliner from cord material in the carcass.

- **Intended outboard sidewall**

(1) The sidewall that contains a whitewall, bears white lettering or bears manufacturer, brand, and/or model name molding that is higher or deeper than the same molding on the other sidewall of the tire, or

(2) The outward facing sidewall of an asymmetrical tire that has a particular side that must always face outward when mounting on a vehicle.

- **Light truck (LT) tire**

A tire designated by its manufacturer as primarily intended for use on lightweight trucks or multipurpose passenger vehicles.

- **Load rating**

The maximum load that a tire is rated to carry for a given inflation pressure.

- **Maximum inflation pressure**

The maximum cold inflation pressure to which a tire may be inflated.

- **Maximum load rating**

The load rating for a tire at the maximum permissible inflation pressure for that tire.

- **Maximum loaded vehicle weight**

The sum of:

(a) Curb weight
(b) Accessory weight
(c) Vehicle capacity weight
(d) Production options weight

- **Maximum permissible inflation pressure**

The maximum cold inflation pressure to which a tire may be inflated.

- **Measuring rim**

The rim on which a tire is fitted for physical dimension requirements.

- **Normal occupant weight**

150 lbs (68 kg) times the number of occupants specified in the second column of Table 1 that is appended to the end of this section.

- **Occupant distribution**

Distribution of occupants in a vehicle as specified in the third column of Table 1 that is appended to the

end of this section.

- **Open splice**

Any parting at any junction of tread, sidewall, or innerliner that extends to cord material.

- **Outer diameter**

The overall diameter of an inflated new tire.

- **Overall width**

The linear distance between the exteriors of the sidewalls of an inflated tire, including elevations due to labeling, decorations, or protective bands or ribs.

- **Passenger car tire**

A tire intended for use on passenger cars, multipurpose passenger vehicles, and trucks, that have a gross vehicle weight rating (GVWR) of 10,000 lbs (4,535 kg) or less.

- **Ply**

A layer of rubber-coated parallel cords.

- **Ply separation**

A parting of rubber compound between adjacent plies.

- **Pneumatic tire**

A mechanical device made of rubber, chemicals, fabric and steel or other materials, that, when mounted on an automotive wheel, provides the traction and contains the gas or fluid that sustains the load.

- **Production options weight**

The combined weight of those installed regular production options weighing over 5.1 lbs (2.3 kg) in excess of those standard items which they replace, not previously considered in curb weight or accessory weight, including heavy duty brakes, ride levelers, roof rack, heavy duty battery, and special trim.

- **Radial ply tire**

A pneumatic tire in which the ply cords that extend to the beads are laid at substantially 90 degrees to the centerline of the tread.

- **Recommended inflation pressure**

The cold inflation pressure recommended by a vehicle manufacturer.

- **Reinforced tire**

A tire designed to operate at higher loads and at higher inflation pressures than the corresponding standard tire.

- **Rim**

A metal support for a tire or a tire and tube assembly upon which the tire beads are seated.

- **Rim diameter**

Nominal diameter of the bead seat.

- **Rim size designation**

Rim diameter and width.

- **Rim type designation**

The industry of manufacturer's designation for a rim by style or code.

- **Rim width**

Nominal distance between rim flanges.

- **Section width**

The linear distance between the exteriors of the sidewalls of an inflated tire, excluding elevations due to labeling, decoration, or protective bands.

– CONTINUED –

- **Sidewall**

That portion of a tire between the tread and bead.

- **Sidewall separation**

The parting of the rubber compound from the cord material in the sidewall.

- **Snow tire**

A tire that attains a traction index equal to or greater than 110, compared to the ASTM E-1136 Standard Reference Test Tire, when using the snow traction test as described in ASTM F-1805-00, Standard Test Method for Single Wheel Driving Traction in a Straight Line on Snow-and Ice-Covered Surfaces, and which is marked with an Alpine Symbol "⛄" on at least one sidewall.

- **Test rim**

The rim on which a tire is fitted for testing, and it may be any rim listed as appropriate for use with that tire.

- **Tread**

That portion of a tire that comes into contact with the road.

- **Tread rib**

A tread section running circumferentially around a tire.

- **Tread separation**

Pulling away of the tread from the tire carcass.

- **Treadwear indicators (TWI)**

The projections within the principal grooves designed to give a visual indication of the degrees of wear of the tread.

- **Vehicle capacity weight**

The rated cargo and luggage load plus 150 lbs (68 kg) times the vehicle's designated seating capacity.

- **Vehicle maximum load on the tire**

Load on an individual tire that is determined by distributing to each axle its share of the maximum loaded vehicle weight and dividing by two.

- **Vehicle normal load on the tire**

Load on an individual tire that is determined by distributing to each axle its share of the curb weight, accessory weight, and normal occupant weight (distributed in accordance with Table 1 that is appended to the end of this section) and dividing by 2.

- **Wheel-holding fixture**

The fixture used to hold the wheel and tire assembly securely during testing.

Table 1 — Occupant loading and distribution for vehicle normal load for various designated seating capacities

Designated seating capacity, number of occupants	Vehicle normal load, number of occupants	Occupant distribution in a normally loaded vehicle
2 through 4	2	2 in front.
5 through 10	3	2 in front, 1 in second seat.
11 through 15	5	2 in front, 1 in second seat, 1 in third seat, 1 in fourth seat.
16 through 22	7	2 in front, 2 in second seat, 2 in third seat, 1 in fourth seat.

■ Tire Care – Maintenance and Safety Practices

- Check on a daily basis that the tires are free from serious damage, nails, and stones. At the same time, check the tires for abnormal wear.
- Inspect the tire tread regularly and replace the tires before their tread wear indicators become visible. When a tire's tread wear indicator becomes visible, the tire is worn beyond the acceptable limit and must be replaced immediately. With a tire in this condition, driving at even low speeds in wet weather can cause the vehicle to hydroplane. Possible resulting loss of vehicle control can lead to an accident.

– CONTINUED –

- To maximize the life of each tire and ensure that the tires wear uniformly, it is best to rotate the tires every 6,000 miles (10,000 km). Rotating the tires involves switching the front and rear tires on the right-hand side of the vehicle and similarly switching the front and rear tires on the left-hand side of the vehicle. (Each tire must be kept on its original side of the vehicle.) Replace any damaged or unevenly worn tire at the time of rotation. After tire rotation, adjust the tire pressures and make sure the wheel nuts are correctly tightened. For information about the tightening torque and tightening sequence for the wheel nuts, refer to "Flat Tires" ☞P444.

■ Vehicle Load Limit – How to Determine

The load capacity of your vehicle is determined by weight, not by available cargo space. The load limit of your vehicle is shown on the vehicle placard attached to the driver's side B-pillar. Locate the statement "The combined weight of occupants and cargo should never exceed XXX kg or XXX lbs" on your vehicle's placard.

The vehicle placard also shows seating capacity of your vehicle.

The total load capacity includes the total weight of driver and all passengers and their belongings, any cargo, any optional equipment such as a trailer hitch, roof rack or bike carrier, etc., and the tongue load of a trailer. Therefore cargo capacity can be calculated by the following method.

Cargo capacity = Load limit − (total weight of occupants + total weight of optional equipment + tongue load of a trailer (if applicable))

For towing capacity information and weight limits, refer to "Trailer Towing (Outback)" ☞P430.

▼ Calculating total and load capacities varying seating configurations

Calculate the available load capacity as shown in the following examples:

Example 1A

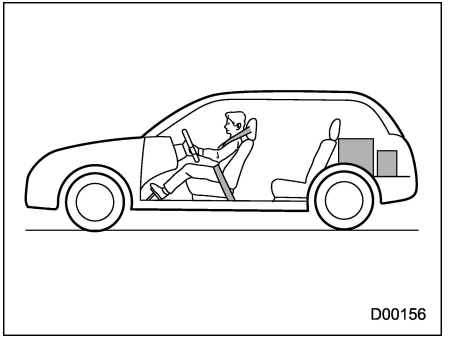

Vehicle capacity weight of the vehicle is 800 lbs (363 kg), which is indicated on the vehicle placard with the statement "The combined weight of occupants and cargo should never exceed 363 kg or 800 lbs".

For example, if the vehicle has one

occupant weighing 154 lbs (70 kg) plus cargo weighing 551 lbs (250 kg).

1. Calculate the total weight.

Total weight

= 154 lbs (70 kg) (Occupant) + 551 lbs (250 kg) (Cargo)

= **705 lbs (320 kg)**

2. Calculate the available load capacity by subtracting the total weight from the vehicle capacity weight of 800 lbs (363 kg).

Available Load Capacity

= 800 lbs (363 kg) (Vehicle capacity weight) – 705 lbs (320 kg) (Total weight)

= **95 lbs (43 kg)**

3. The result of step 2 shows that a further 95 lbs (43 kg) of cargo can be carried.

Example 1B

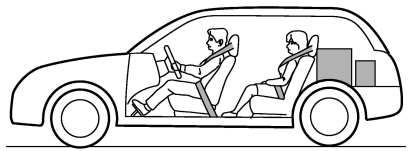

For example, if a person weighing 176 lbs (80 kg) now enters the same vehicle (bringing the number of occupants to two), the calculations are as follows:

1. Calculate the total weight.

Total weight

= 154 lbs (70 kg) + 176 lbs (80 kg) (Occupant)

+ 551 lbs (250 kg) (Cargo)

= **881 lbs (400 kg)**

2. Calculate the available load capacity.

Available Load Capacity

= 800 lbs (363 kg) (Vehicle capacity weight) – 881 lbs (400 kg) (Total weight)

= **–81 lbs (–37 kg)**

3. The total weight now exceeds the capacity weight by 81 lbs (37 kg), so the cargo weight must be reduced by 81 lbs (37 kg) or more.

Example 2A (Outback only)

CAUTION

Legacy: Your vehicle is neither designed nor intended to be used for trailer towing. Therefore, never tow a trailer with your vehicle.

– CONTINUED –

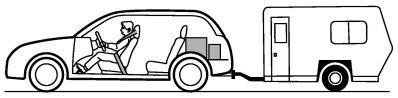

Vehicle capacity weight of the vehicle is 800 lbs (363 kg), which is indicated on the vehicle placard with the statement “The combined weight of occupants and cargo should never exceed 363 kg or 800 lbs”.

For example, the vehicle has one occupant weighing 165 lbs (75 kg) plus cargo weighing 265 lbs (120 kg). In addition, the vehicle is fitted with a trailer hitch weighing 22 lbs (10 kg), to which is attached a trailer weighing 1,764 lbs (800 kg). 10% of the trailer weight is applied to the trailer tongue (i.e. Tongue load = 176 lbs (80 kg)).

1. Calculate the total weight.

Total weight

= 165 lbs (75 kg) (Occupant) + 265 lbs (120 kg) (Cargo)

+ 22 lbs (10 kg) (Trailer hitch) + 176 lbs (80 kg) (Tongue load)

= **628 lbs (285 kg)**

2. Calculate the available load capacity.

Available Load Capacity

= 800 lbs (363 kg) (Vehicle capacity weight) – 628 lbs (285 kg) (Total weight)

= **172 lbs (78 kg)**

3. The result of step 2 shows that a further 172 lbs (78 kg) of cargo can be carried.

Example 2B (Outback only)

CAUTION

Legacy: Your vehicle is neither designed nor intended to be used for trailer towing. Therefore, never tow a trailer with your vehicle.

For example, if a person weighing 143 lbs (65 kg) and a child weighing 40 lbs (18 kg) now enter the same vehicle (bringing the number of occupants to three), and a child restraint system weighing 11 lbs (5 kg) is installed in the vehicle for the

child to use, the calculations are as follows:

1. Calculate the total weight.

Total weight

= 165 lbs (75 kg) + 143 lbs (65 kg) (Occupant)

+ 40 lbs (18 kg) (Occupant)

+ 11 lbs (5 kg) (Child restraint) + 265 lbs (120 kg) (Cargo)

+ 22 lbs (10 kg) (Trailer hitch) + 176 lbs (80 kg) (Tongue load)

= **822 lbs (373 kg)**

2. Calculate the available load capacity.

Available Load Capacity

= 800 lbs (363 kg) (Vehicle capacity weight) – 822 lbs (373 kg) (Total weight)

= **–22 lbs (–10 kg)**

3. The total weight now exceeds the capacity weight by 22 lbs (10 kg), so the cargo weight must be reduced by 22 lbs (10 kg) or more.

■ Determining Compatibility of Tire and Vehicle Load Capacities

The sum of four tires' maximum load ratings must exceed the maximum loaded vehicle weight ("GVWR"). In addition, sum of the maximum load ratings of two front tires and of two rear tires must exceed each axle's maximum loaded capacity ("GAWR"). Original equipment tires are designed to fulfill those conditions.

The maximum loaded vehicle weight is referred to Gross Vehicle Weight Rating (GVWR). And each axle's maximum loaded capacity is referred to Gross Axle Weight Rating (GAWR). The GVWR and each axle's GAWR are shown on the vehicle certification label affixed to the driver's door.

The GVWR and front and rear GAWRs are determined by not only the maximum load rating of tires but also loaded capacities of the vehicle's suspension, axles and other parts of the body.

Therefore, this means that the vehicle cannot necessarily be loaded up to the tire's maximum load rating on the tire sidewall.

■ Adverse Safety Consequences of Overloading on Handling and Stopping and on Tires

Overloading could affect vehicle handling, stopping distance, vehicle and tire as shown in the following. This could lead to an accident and possibly result in severe personal injury.

- Vehicle stability will deteriorate.
- Heavy and/or high-mounted loads could increase the risk of rollover.
- Stopping distance will increase.
- Brakes could overheat and fail.
- Suspension, bearings, axles and other parts of the body could break or experience accelerated wear that

– CONTINUED –

will shorten vehicle life.

- Tires could fail.
- Tread separation could occur.
- Tire could separate from its rim.

■ Steps for Determining Correct Load Limit

1. Locate the statement “The combined weight of occupants and cargo should never exceed XXX kg or XXX lbs.” on your vehicle’s placard.
2. Determine the combined weight of the driver and passengers that will be riding in your vehicle.
3. Subtract the combined weight of the driver and passengers from XXX kg or XXX lbs.
4. The resulting figure equals the available amount of cargo and luggage load capacity. For example, if the “XXX” amount equals 1,400 lbs (635 kg) and there will be five 150 lbs (68 kg) passengers in your vehicle, the amount of available cargo and luggage load capacity is 650 lbs (1,400 − 750 (5 × 150) = 650 lbs).
5. Determine the combined weight of luggage and cargo being loaded on the vehicle. That weight may not safely exceed the available cargo and luggage load capacity calculated in Step 4.
6. If your vehicle will be towing a trailer, load from your trailer will be transferred to your vehicle. Consult this manual to determine how this reduces the available cargo and luggage load capacity of your vehicle.

13-3. Uniform Tire Quality Grading Standards

This information indicates the relative performance of passenger car tires in the area of treadwear, traction, and temperature resistance. This is to aid the consumer in making an informed choice in the purchase of tires.

Quality grades can be found where applicable on the tire sidewall between tread shoulder and maximum section width. For example:

TREADWEAR 200 TRACTION AA TEMPERATURE A

The quality grades apply to new pneumatic tires for use on passenger cars. However, they do not apply to deep tread, winter type snow tires, space-saver or temporary use spare tires, tires with nominal rim diameters of 12 inches or less, or to some limited production tires.

All passenger car tires must con-

form to Federal Safety Requirements in addition to these grades.

■ TREADWEAR

The treadwear grade is a comparative rating based on the wear rate of the tire when tested under controlled conditions on a specified government test course.

For example, a tire graded 150 would wear one and one-half (1-1/2) times as well on the government course as a tire graded 100. The relative performance of tires depends upon the actual conditions of their use, however, and may depart significantly from the norm due to variations in driving habits, service practices and differences in road characteristics and climate.

■ TRACTION AA, A, B, C

The traction grades, from highest to lowest, are AA, A, B and C. Those grades represent the tire's ability to stop on wet pavement as measured under controlled conditions on specified government test surfaces of asphalt and concrete. A tire marked C may have poor traction performance.

⚠ WARNING

The traction grade assigned to this tire is based on straight-ahead braking traction tests, and does not include acceleration, cornering, hydroplaning, or peak traction characteristics.

■ TEMPERATURE A, B, C

The temperature grades are A (the highest), B, and C, representing the tire's resistance to the generation of heat and its ability to dissipate heat when tested under controlled conditions on a specified indoor laboratory test wheel. Sustained high temperature can cause the material of the tire to degenerate and reduce tire life, and excessive temperature can lead to sudden tire failure. The grade C corresponds to a level of performance which all passenger car tires must meet under the Federal Motor Vehicle Safety Standard No. 109. Grades B and A represent higher levels of performance on the laboratory test wheel than the minimum required by law.

⚠ WARNING

The temperature grade for this tire is established for a tire that is properly inflated and not overloaded. Excessive speed, underinflation, or excessive loading, either separately or in combination, can cause heat buildup and possible tire failure.

13-4. Reporting Safety Defects (USA)

If you believe that your vehicle has a defect which could cause a crash or could cause injury or death, you should immediately inform the National Highway Traffic Safety Administration (NHTSA) in addition to notifying Subaru of America, Inc.

If NHTSA receives similar complaints, it may open an investigation, and if it finds that a safety defect exists in a group of vehicles, it may order a recall and remedy campaign. However, NHTSA cannot become involved in individual problems between you, your dealer, or Subaru of America, Inc. To contact NHTSA, you may call the Vehicle Safety Hotline toll-free at 1-888-327-4236 (TTY: 1-800-424-9153); go to http://www.safercar.gov; or write to: Administrator, NHTSA, 1200 New Jersey Avenue, SE, West Building, Washington, DC 20590. You can also obtain other information about motor vehicle safety from http://www.safercar.gov.

1
11.6-inch display models P206

A
Abbreviation P4
ABS (Anti-lock Brake System) P346
  Warning light P181
Access key P113
  Warning indicator P187
Accessories P507
Accessory power outlet P302
Adjustable storage net P313
Air cleaner element P486
Air conditioner
  Automatic climate control P279
  Manual climate control system P281
Air filtration system P287
Airflow selection P281
Alarm system P140
All-Wheel Drive warning light P185
Alloy wheel P500
  Cleaning P465
Antenna P292
Anti-lock Brake System (ABS) P346
Arming the system P140
Armrest P45
Assist grip P305
AT OIL TEMP warning light P180
Audio
  Antenna P292
  Set P292
Auto on/off headlights P242
  Sensor P243
Auto Start Stop system P361
  Indicator light P195
  OFF indicator light P194
  Warning light P194
Auto Vehicle Hold P357
Auto Vehicle Hold function P357
  ON indicator light P184
  Operation indicator light P185
Auto Vehicle Hold ON P184
Auto Vehicle Hold operation P185
Automatic headlight beam leveler
  Warning light P194
Automatic Locking Retractor/Emergency Locking Retractor (ALR/ELR) P47

B
Battery
  Drainage prevention function P139
  Jump starting P449
  Replacement (access key) P515
  Replacement (remote engine start transmitter) P334
  Replacement (transmitter) P516
  Vehicle battery P505
Booster seat P66
Bottle holder P301
Brake
  Assist P345
  Booster P345, P491
  Disc P527

Fluid P490, P525
Parking P355
Pedal P491
System P345
Brake pad P527
Brake system P345
Warning light P182
Braking P344
Tips P344
BSD/RCTA P374
Approach indicator light/warning buzzer P377
OFF indicator P195, P200, P379
Warning indicator P195, P200, P380
Bulb
Chart P532
Replacing P508

C

Camera
Front View Monitor P366
Rear view camera P369
Cargo area
Cover P308
Light P297, P513
Tie-down hooks P312
Catalytic converter P411
Center
Console P299
Center information display P468
Center information display (CID)
11.6-inch display models P206
Dual 7.0-inch display models P227
Changing
Coolant P485
Flat tire P444
Oil and oil filter P483
Charge warning light P179
CHECK ENGINE warning light/Malfunction indicator light P178
Checking
Coolant level P485
Fluid level (brake fluid) P490
Fluid level (washer fluid) P500
Oil level (engine oil) P481
Child restraint systems P57
Installation of a booster seat P66
Installation with ALR/ELR seatbelt P62
Lower and top tether anchorages P67
Top tether anchorages P72
Child safety P5
Locks P143
Chime
Key P167
Light P241
Seatbelt P175
Cleaning
Alloy wheels P465
Interior P467
Ventilation grille P286
Climate control system P273
Automatic P279
Manual P281

Clock P239
Coat hook P306
Combination meter display (color LCD) P197
Console P299
Continuously variable transmission (CVT) P336
Fluid P489, P525
Oil temperature warning light (AT OIL TEMP) P180
Coolant P485, P525
Cooling system P484
Corrosion protection P466
Crossbars P424
Cup holder P300
Front passenger's P300
Rear passenger's P301

D

Daytime running light system P247
Defogger P254
Defrosting P285
Deicer P254
Differential gear oil
Front P489, P524
Rear P489, P524
Dimensions P520
Disarming the alarm system P141
Disc brake pad wear warning indicators P345
Dome light P296, P513
Door
Locks P136
Open indicator light P185
Step light P513
Unlock selection function P122
Double trip meter P172
Drive belts P489
Driver Forcus P394
Driver Monitoring System P394
Driving
All-Wheel Drive warning light P185
AWD vehicles P413
Drinking P7
Drugs P7
Foreign countries P412
Off road P414
Pets P8
Snowy and icy roads P418
Tips P341, P410, P413
Tired or sleepy P8
Winter P416
Dual 7.0-inch display models P227

E

Electrical system P526
Electronic Brake Force Distribution (EBD) system P346
Warning P183
Electronic parking brake P355
Automatic release function by accelerator pedal P357
Indicator light P183
Warning P183, P360
Emergency Locking Retractor (ELR) P47
Engine
Compartment overview P479
Coolant P485, P525

Exhaust gas (carbon monoxide) P6, P410
Hood P477
Low oil level warning indicator P179
Oil P481, P522
Overheating P451
Starting & stopping P324, P327
Event data recorder P10
Exterior care P464

F

Flat tires P444
Floor mat P307
Fluid level
Brake P490
Continuously variable transmission P489
Fog light
Bulb P532
Indicator light P194
Switch P249
Folding mirror switch P265
Front
Differential gear oil P489, P524
Seatbelt pretensioners P54
Turn signal light P508
View Monitor P366
Front seats P28
Forward and backward adjustment P30
Head restraint adjustment P36
Memory function P33
Power seat P31
Reclining P31
Seat heater and ventilation P284
Seat height adjustment (driver's seat) P31
Front View Monitor P366
Fuel P317
Consumption indicator P201
Economy hints P410
Filler door and cap P319
Filler lid and cap P319
Gauge P172
Requirements P317, P521
Fuses P506
Fuses and circuits P528

G

GAWR (Gross Axle Weight Rating) P422
Glove box P299
GVWR (Gross Vehicle Weight Rating) P422

H

Hands-free Power Rear Gate function P157
Hazard warning flasher P170, P440
Head restraint adjustment
Front seat P36
Rear seat P44
Headlight P242
Beam leveler P249
Bulb wattage P532
Control switch P241
Flasher P244
Indicator light P194
Welcome lighting function P243

Heated Steering Wheel system P267
High beam assist function..... P244
Indicator light..... P193
High beam indicator light P193
High/low beam change (dimmer) P244
Hill descent control P351
Indicator P195
Hook
Coat..... P306
Convenient tie-down P312
Shopping bag..... P306
Towing and tie-down P452
Horn..... P268
Hose and connections..... P484

I
Ignition switch P166
Light..... P167
Illumination brightness control P173
Immobilizer P130
Indicator light (security indicator light)..... P192
Indicator light
Auto Start Stop..... P194, P195
Auto Start Stop OFF P194
Auto Vehicle Hold ON P184
Auto Vehicle Hold operation..... P185
BSD/RCTA OFF P195
Door open..... P185
Driver Monitoring System OFF P196
Driver Monitoring System operation (green)..... P196
Driver Monitoring System temporary stop P196
Electronic parking brake..... P183
Front fog light P194
Front passenger's frontal airbag ON and OFF P177
Headlight..... P194
High beam P193
High beam assist P193
Hill descent control..... P195
Immobilizer..... P192
Security P192
Select lever/Gear position P193
SI-DRIVE P193
Sonar audible alarm OFF..... P197
Turn signal P193
Vehicle Dynamics Control OFF P187
Vehicle Dynamics Control operation P187
X-MODE P195
Inside mirror P256
Interior lights..... P296
Internal trunk lid release handle P147

J
Jack-up point P444
Jump starting P449

K
Key..... P113
Number..... P113
Reminder chime..... P167
Replacement P130
Keyless access with push-button start system P113
Disabling keyless access functions..... P125

Locking and unlocking doors P118
Warning chimes and warning indicator P187
When access key does not operate properly..... P456
Keyless entry system P132

L

Lap belt pretensioner P55
LCA P375
Leather seat materials..... P467
Lifting Cargo Cover..... P308
Light
Backup P511
Cargo area P297, P513
Control switch P241
Daytime running P247
Dome P296, P513
Door step..... P513
Front fog..... P249
Front side marker P242
Ignition switch P167
Map P296, P513
Rear combination..... P509
Rear side marker light P509
Rear turn signal..... P509
Trunk..... P514
Turn signal..... P250, P508, P509
Vanity mirror..... P298
Loading your vehicle P420
Low fuel warning light..... P185
Low tire pressure warning light..... P180
Lower and top tether anchorage P67

M

Maintenance
Precautions P473
Schedule..... P473
Seatbelt P53
Tips P475
Tools P441
Malfunction indicator light (check engine warning light) P178
Manual
Climate control..... P281
Climate control system..... P281
Mode (continuously variable transmission) P340
Seat P30
Map light P296, P513
Maximum load limits P430
Meters and gauges..... P171
Mirror defogger P254
Mirrors P256
Moonroof..... P159

N

New vehicle break-in driving P410

O

Odometer P171
Off road driving P414
Oil filter P483
Oil level
Engine P481
Warning light P179

Oil pressure warning light P179
On-road and off-road driving P9
Outside
Mirror defogger..... P254
Mirrors..... P264
Overhead console..... P299
Overheating engine..... P451

P
Parking..... P355
Brake P355
Tips..... P360
Periodic inspections P412
Petrol fuel P317
PIN code Access P122
Power
Outlets P302
Outside mirrors..... P264, P265
Rear gate P150
Seat P31
Steering..... P343
Steering warning light..... P186
Windows..... P143
Precautions against vehicle modification..... P56, P107
Preparing to drive P324
Push-button
Ignition switch P168
Starting and stopping engine..... P327

R
RAB (Reverse Automatic Braking)
OFF indicator..... P196
ON/OFF setting..... P392
Warning indicator P196
RCTA..... P375
Rear
Combination lights..... P509
Differential gear oil P489, P524
Gate P149
Turn signal light P509
View camera P369
Rear seat P40
Armrest..... P45
Folding down P41
Head restraint adjustment P44
Reclining..... P40
Rear view camera P369
Rear window
Defogger..... P254
Wiper and washer switch P253
Wiper blades P503
Recommended
Brake fluid..... P525
Continuously variable transmission fluid..... P525
Engine oil..... P522
Front differential gear oil P524
Rear differential gear oil..... P524
Spark plugs P526
Refueling..... P319

Remote engine start system..... P330
Remote keyless entry system..... P132
Replacement
Brake pad and lining P491
Wiper blades..... P501
Replacing
Access key battery..... P515
Air cleaner element..... P486
Battery of access key fob P515
Lost transmitters (remote keyless entry system) P135
Remote engine start transmitter battery..... P334
Remote keyless entry transmitter battery P516
Replacing bulbs..... P508, P532
Backup light P511
Cargo area light..... P513
Dome light P513
Door step light..... P513
Front turn signal light P508
Headlight P508
LED headlight P508
Map light P513
Rear combination light..... P509
Rear side marker light P509
Rear turn signal light P509
Trunk light..... P514
Reverse Automatic Braking System P383
Rocking the vehicle..... P420
Roof molding and crossbar P422
Roof rails with integrated cross bars P424

S
Safety
Precautions when driving P5
Symbol P4
Warnings..... P3
Seat
Fabric P467
Front P28
Heater P38
Height adjustment P31
Memory function P33
Power P31
Rear P40
Ventilation P39
Seatbelt..... P5, P46
Fastening P47
Maintenance..... P53
Pretensioners P54
Safety tips P46
Warning light and chime..... P175
Security
Alarm system..... P140
Immobilizer..... P130
Indicator light..... P192
Select lever
Position indicator..... P193
Shift lock function..... P339
Shopping bag hook..... P306
Shoulder pretensioners P55

SI-DRIVE P342
Indicator P193
Indicator light P193
SI-DRIVE mode P342
Snow tires P419, P492
Snowy and icy roads P418
Sounding a panic alarm P134
Spark plugs P488, P526
Specifications P520
Speedometer P171
SRS
Curtain airbag P98
Side airbag P98
SRS airbag (Supplemental Restraint System airbag) P5, P75
SRS airbag system
Monitors P105
Servicing P106
Warning light P177
Starting & stopping engine P324, P327
State emission testing (U.S. only) P322
Steering Responsive Headlight P248
Steering wheel
Lock P326, P329
Power P343
Tilt/telescopic P267
Stop light P533
Storage compartment P298
Sun shade P160
Sun visors P297
Supplemental Restraint System airbag (SRS) P75
Synthetic leather upholstery P468

T

Tachometer P171
Temperature gauge P173
Temperature warning light
AT OIL TEMP P180
Temporary spare tire P440
Tether (child restraint system) P67, P72
Tie-down hooks P452
Tire P492, P526
Chains P420
Inspection P494
Pressures and wear P494
Replacement P498
Rotation P498
Size and pressure P526
Types P492
Tire pressure monitoring system (TPMS) P353, P447, P492
Warning light P180
Tires and wheels P492
Tools P441
Top tether anchorages P67, P72
Towing P452
All wheels on the ground P455
Flat-bed truck P455
Hooks P452
Weight P430

Trailer
Connecting P428
Hitch (Outback) P427, P433
Towing (Legacy) P430
Towing (Outback) P430
Towing tips P435
Trip meter P172
Trunk lid P146
Release handle P147
Trunk light P514
Turn signal
Indicator lights P193
Lever P250

U
Under-floor storage compartment P313
USB power supply P304

V
Valet mode P142
Vanity mirror P298
Vehicle
Capacity weight P421
Identification P535
Symbols P5
Vehicle Dynamics Control
OFF indicator light P187
Operation indicator light P186
System P347
Warning light P186
Ventilator P272

W
Warning and indicator lights P175
Warning chimes
Keyless access with push-button start system P187
Seatbelt P175
Warning light
ABS P181
Access key P187
All-Wheel Drive P185
AT OIL TEMP P180
Auto Start Stop P194
Automatic headlight beam leveler P194
Brake system P182
BSD/RCTA P195
Charge P179
CHECK ENGINE P178
Driver Monitoring System warning light (yellow) P196
Engine hood open P185
Engine low oil level P179
Keyless access with push-button start system P187
LED headlight P194
Low fuel P185
Low tire pressure P180
Oil pressure P179
Power steering P186
Seatbelt P175
SRS airbag system P177
Steering Responsive Headlight P194
Vehicle Dynamics Control P186
Windshield washer fluid P185
Warranties P2

Warranties and maintenance P430
Washing P464
Waxing and polishing P465
Wear indicators P497
Welcome lighting function P243
Wheel
  Alloy P500
  Balance P496
  Nut tightening torque P526
  Replacement P499
Windows P143
Windshield
  Washer fluid P500
  Wiper and washer switches P252
  Wiper blades P502
  Wiper deicer P254
Winter
  Driving P416
  Tires P419, P492
Wiper and washer P251
Wiper deicer P254

X

X-MODE P350
  Indicator P195

GAS STATION REFERENCE

■ Fuel

Use only **unleaded gasoline** with an octane rating of **87 AKI (90 RON) or higher**.

■ Fuel octane rating

▼ RON

This octane rating is the Research Octane Number.

▼ AKI

This octane rating is the average of the Research Octane and Motor Octane numbers and is commonly referred to as the Anti Knock Index (AKI).

■ Limit of ethanol content

2.5 L models: no more than 10%
2.4 L models: no more than 15%

■ Fuel tank capacity

18.5 US gal (70 liters, 15.4 Imp gal)

■ Engine oil

Always use the SUBARU approved engine oil. For further details, please contact your SUBARU dealer.
If the approved engine oil is unavailable, use the alternative engine oil described as follows.

- API classification SN with the words “RESOURCE CONSERVING” or SN PLUS with the words “RESOURCE CONSERVING”
- or ILSAC GF-5, which can be identified with the ILSAC certification mark (Starburst mark)

For the complete viscosity requirements, refer to “Engine Oil” ☞P522.

■ Engine oil capacity

2.5 L models: 4.4 US qt (4.2 liters, 3.7 Imp qt)
2.4 L models: 4.8 US qt (4.5 liters, 4.0 Imp qt)

The indicated oil quantity is only a guideline and is estimated based on a case when the engine oil is changed with an oil filter. After refilling the engine with oil, the oil level should be checked using an oil level gauge. For more details about maintenance and service, refer to “Engine Oil” ☞P481.

■ Cold tire pressure

Refer to “Tires” ☞P526.