LUBRICATION SYSTEM

ON-VEHICLE INSPECTION

1. CHECK ENGINE OIL LEVEL

(a) Warm up the engine, then stop the engine and wait for 5 minutes. Check that the engine oil level is between the low and full marks on the oil level gauge.
If the engine oil level is low, check for oil leakage and add engine oil up to the full level mark.
NOTICE:
Do not add engine oil to above the full level mark.

2. CHECK ENGINE OIL QUALITY

(a) Check the oil for deterioration, water intrusion, discoloration and thinning.
Oil grade:
Use ILSAC multigrade engine oil.
SAE 5W-30 is the best choice for good fuel economy and good starting in cold weather.

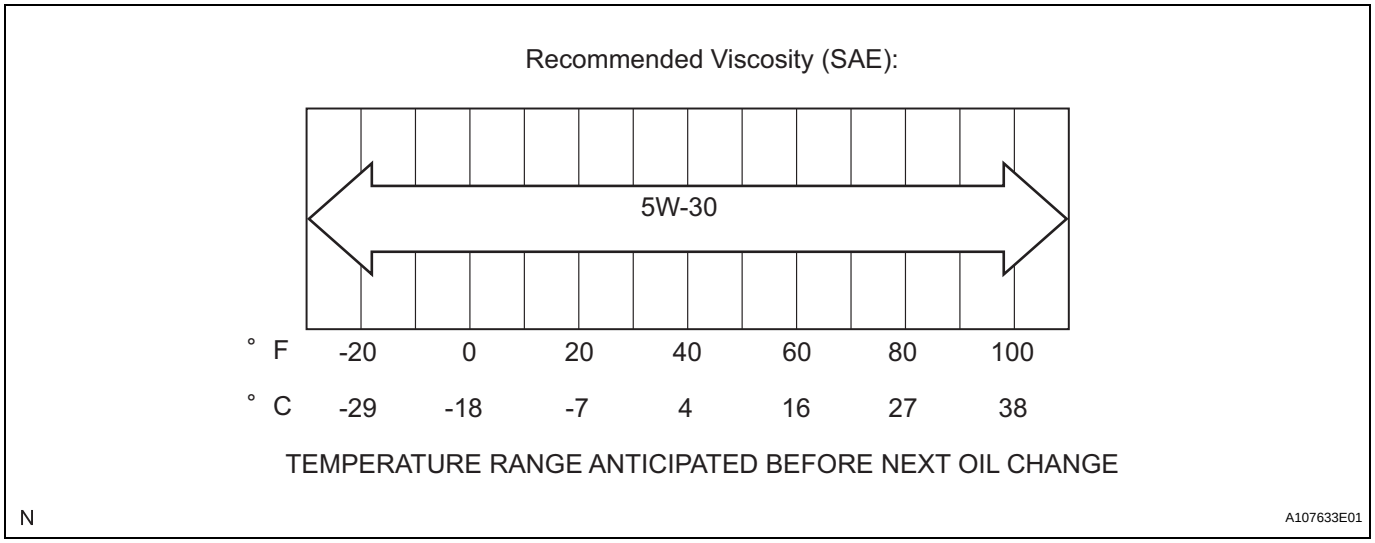

3. REMOVE ENGINE OIL PRESSURE SWITCH ASSEMBLY

(a) Remove the engine under cover LH.
(b) Remove the engine under cover RH.
(c) Disconnect the engine oil pressure switch assembly connector.

LU

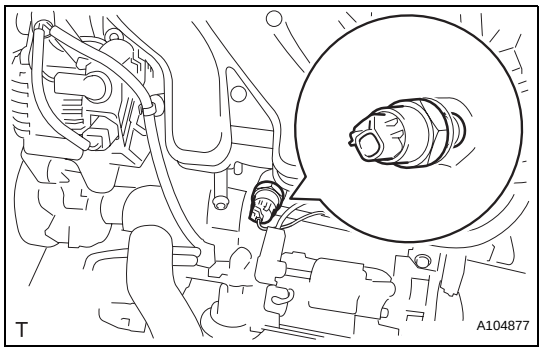

(d) Using a 24 mm deep socket wrench, remove the oil pressure switch.

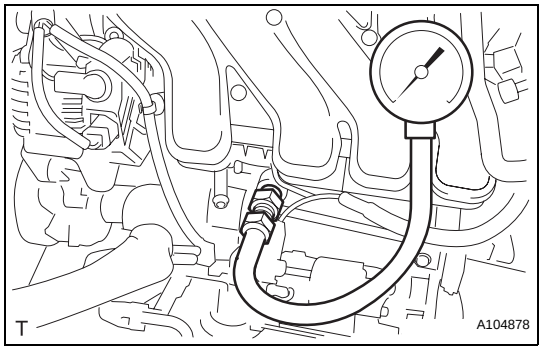

4. INSTALL OIL PRESSURE GAUGE

(a) Install the oil pressure gauge.

5. CHECK OIL PRESSURE

(a) Warm up the engine.

(b) Check the oil pressure.

Standard oil pressure

Engine rpm	Oil Pressure
When idling	29 kPa (0.3 kgf/cm^2, 4.3 psi) or more
At 3,000 rpm	150 to 550 kPa (1.5 to 5.6 kgf/cm^2, 22 to 80 psi) or more

6. REMOVE OIL PRESSURE GAUGE

(a) Remove the oil pressure gauge.

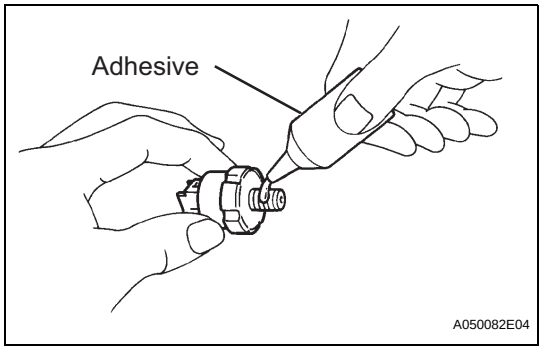

7. INSTALL ENGINE OIL PRESSURE SWITCH ASSEMBLY

(a) Apply adhesive to the end 2 or 3 threads of the oil pressure switch.

Adhesive:

Toyota Genuine Adhesive 1324, Three Bond 1324 or Equivalent

(b) Using a 24 mm deep socket wrench, install the oil pressure switch.

Torque: 15 N*m (153 kgf*cm, 11 ft.*lbf)

NOTICE:

Do not start the engine for at least 1 hour after the installation.

(c) Connect the oil pressure switch assembly connector.

(d) Install the engine under cover RH.

(e) Install the engine under cover LH.

8. CHECK FOR ENGINE OIL LEAKAGE

OIL FILTER

COMPONENTS

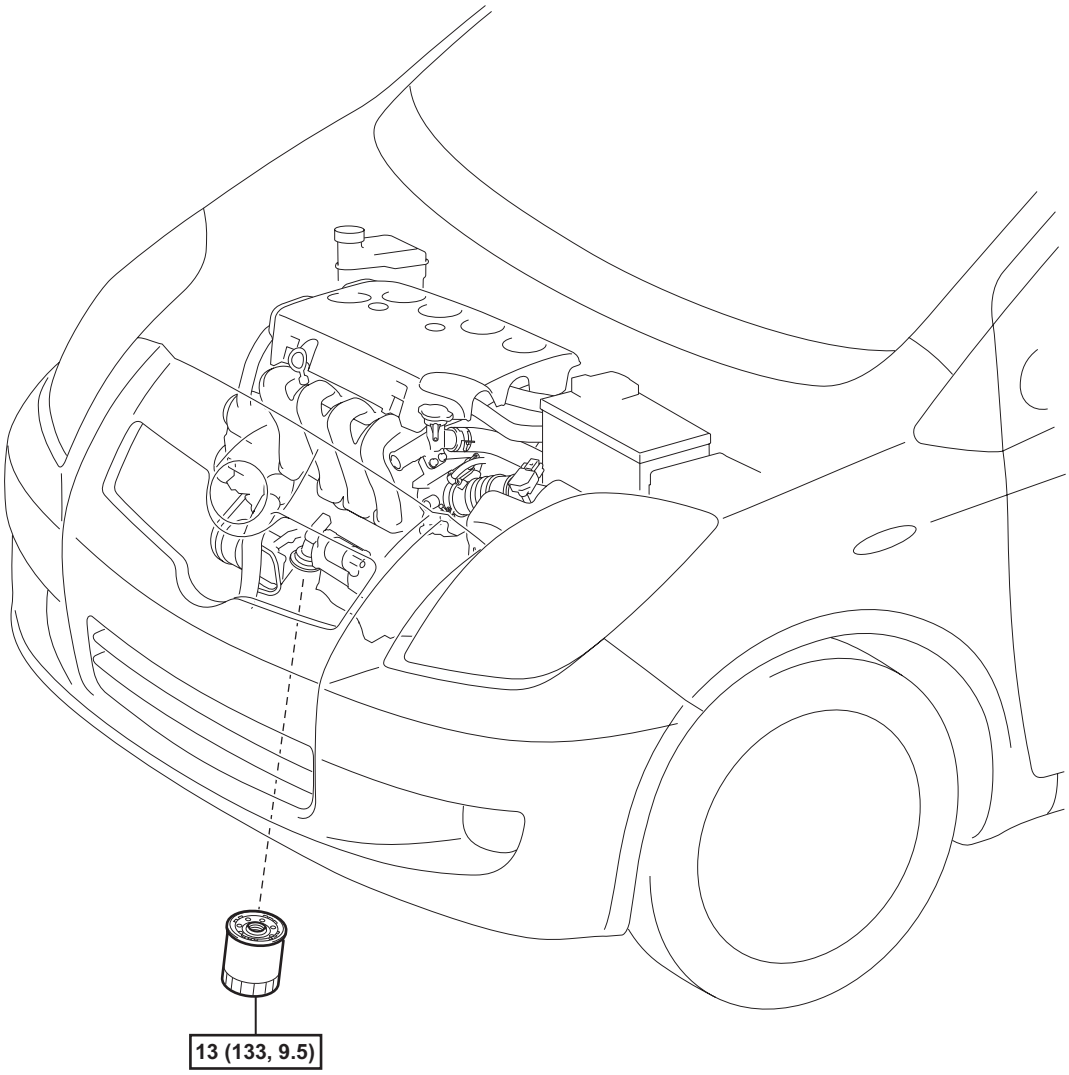

● OIL FILTER SUB-ASSEMBLY

N*m (kgf*cm, ft.*lbf) : Specified torque ● Non-reusable part

T

A106606E04

REPLACEMENT

CAUTION:

- **Prolonged and repeated contact with engine oil will result in the removal of natural oils from the skin, leading to dryness, irritation and dermatitis. Used engine oil contains potentially harmful contaminants which may cause skin cancer.**
- **Take precautions when replacing engine oil to minimize the risk of your skin making contact with used engine oil. Wear protective clothing and gloves that cannot be penetrated by oil. Wash skin with soap and water, or use waterless hand cleaner, to remove any used engine oil completely. Do not use gasoline, thinner, or solvents.**
- **Dispose of used oil and used oil filters at designated disposal sites in order to preserve the environment.**

1. DRAIN ENGINE OIL

(a) Remove the oil pan drain plug and drain the engine oil.

(b) Clean the oil pan drain plug and install it with a new gasket.
Torque: 38 N*m (382 kgf*cm, 28 ft.*lbf)

2. REMOVE OIL FILTER SUB-ASSEMBLY

(a) Using SST, remove the oil filter.
SST 09228-06501

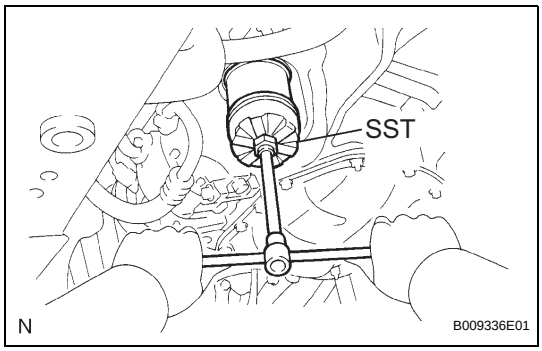

3. INSTALL OIL FILTER SUB-ASSEMBLY

(a) Check and clean the oil filter installation surface.

(b) Apply clean engine oil to the gasket of a new oil filter.

(c) Gently screw the oil filter into place, then tighten it until the gasket comes into contact with the seat.

(d) Using SST, tighten the oil filter.
SST 09228-06501

(1) Depending on the available workspace, choose from the following procedures.
If enough space is available, use a torque wrench to tighten the oil filter.
Torque:
13 N*m (133 kgf*cm, 9.5 ft.*lbf)
If the available workspace is insufficient to use a torque wrench, tighten the oil filter a 3/4 turn by hand or use a common wrench.

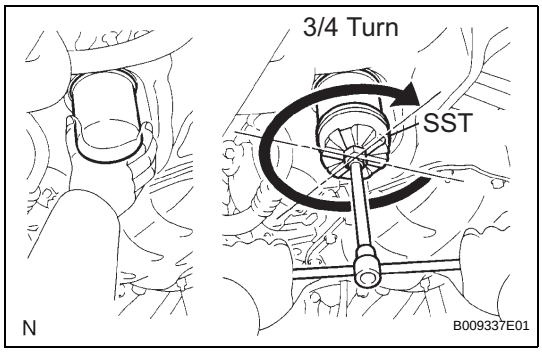

4. ADD ENGINE OIL

(a) Fill with new engine oil.

Oil capacity

Item	Capacity
With oil filter change	3.7 liters (3.9 US qts, 3.4 Imp. qts)
Without oil filter change	3.4 liters (3.6 US qts, 3.1 Imp. qts)

Item	Capacity
Dry fill	4.1 liters (4.3 US qts, 3.8 Imp. qts)

5. CHECK FOR ENGINE OIL LEAKS

6. CHECK ENGINE OIL LEVEL

OIL PUMP

COMPONENTS

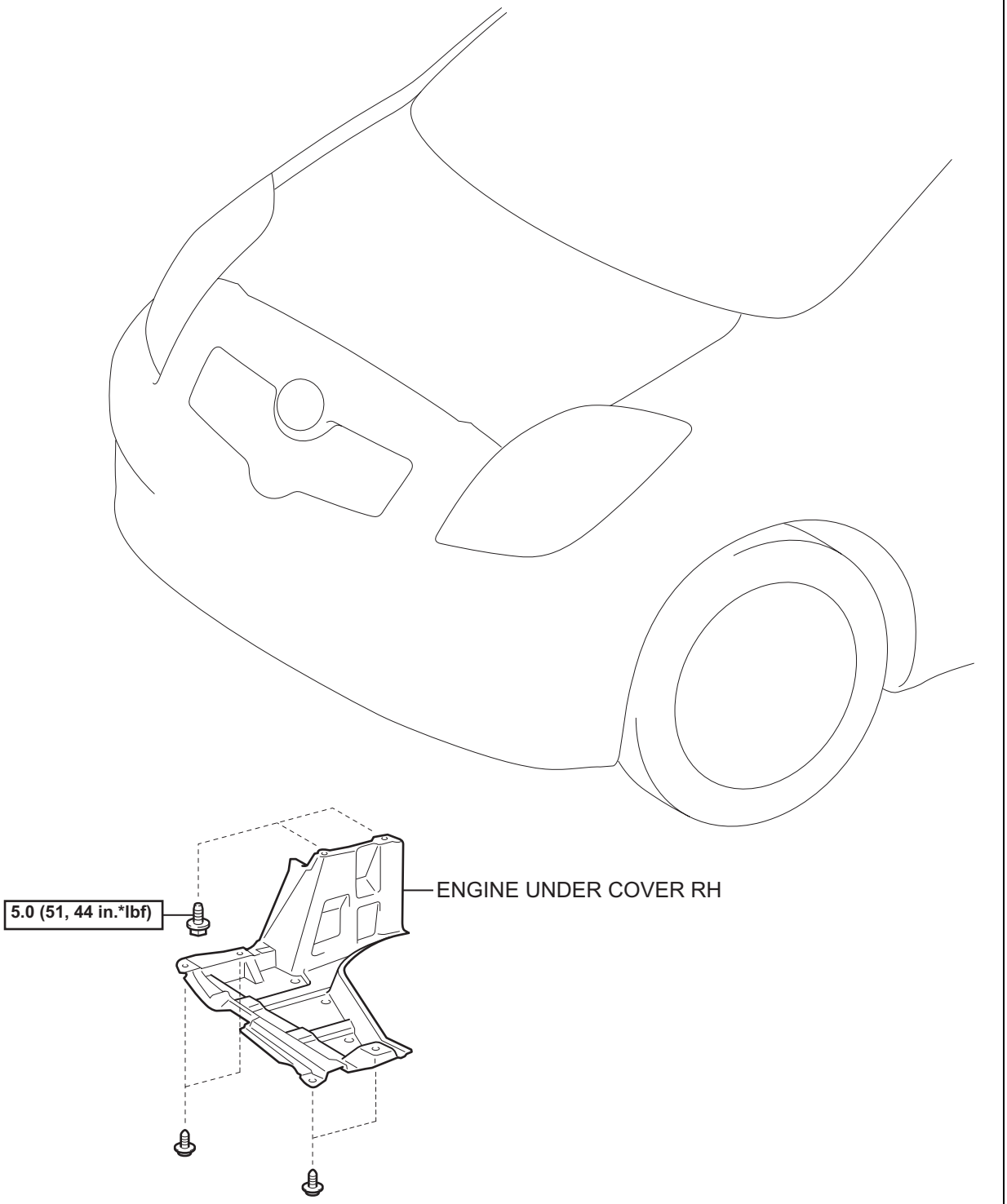

N*m (kgf*cm, ft.*lbf) : Specified torque

T

A115143E01

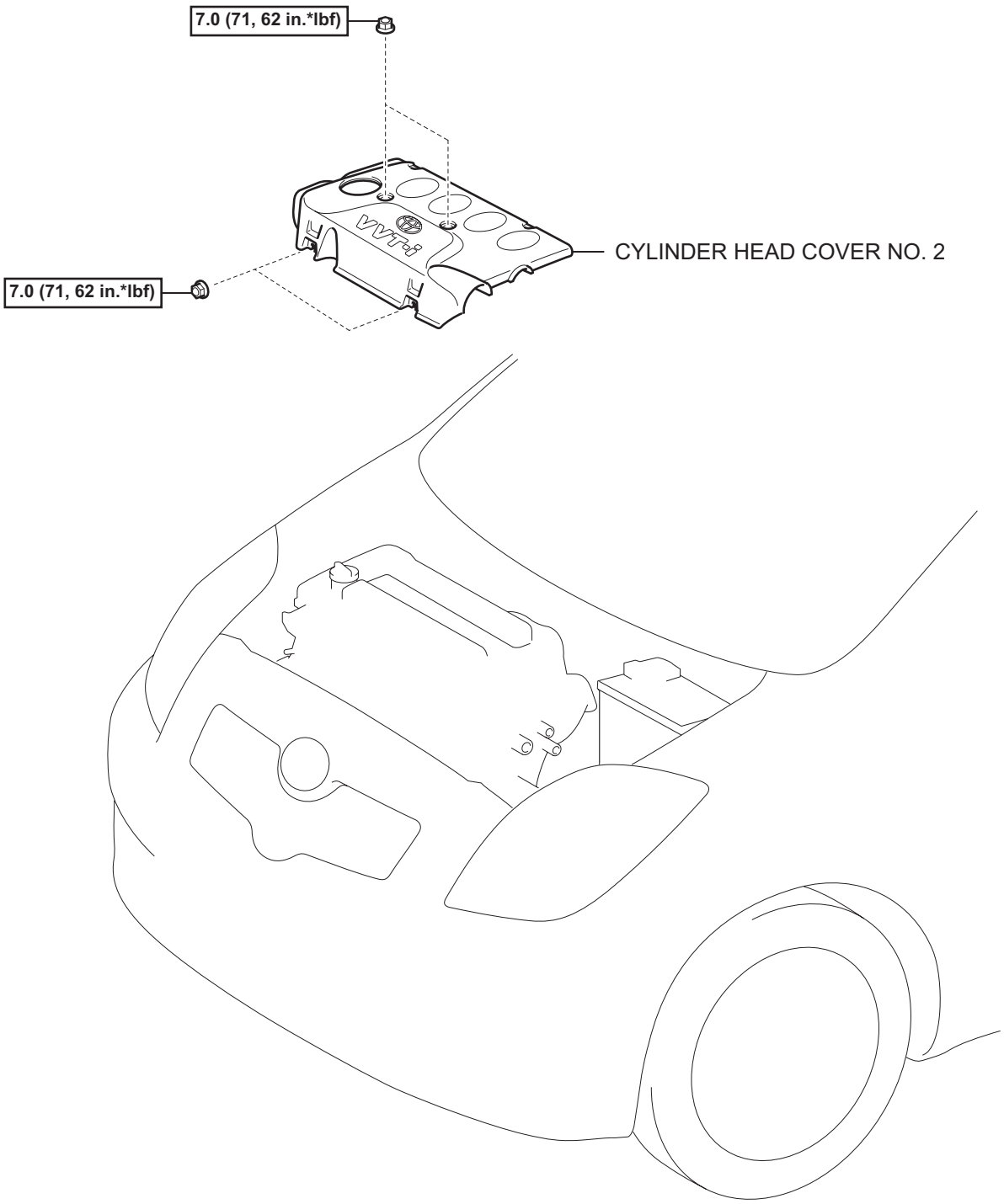

N*m (kgf*cm, ft.*lbf) : Specified torque

T

A115136E01

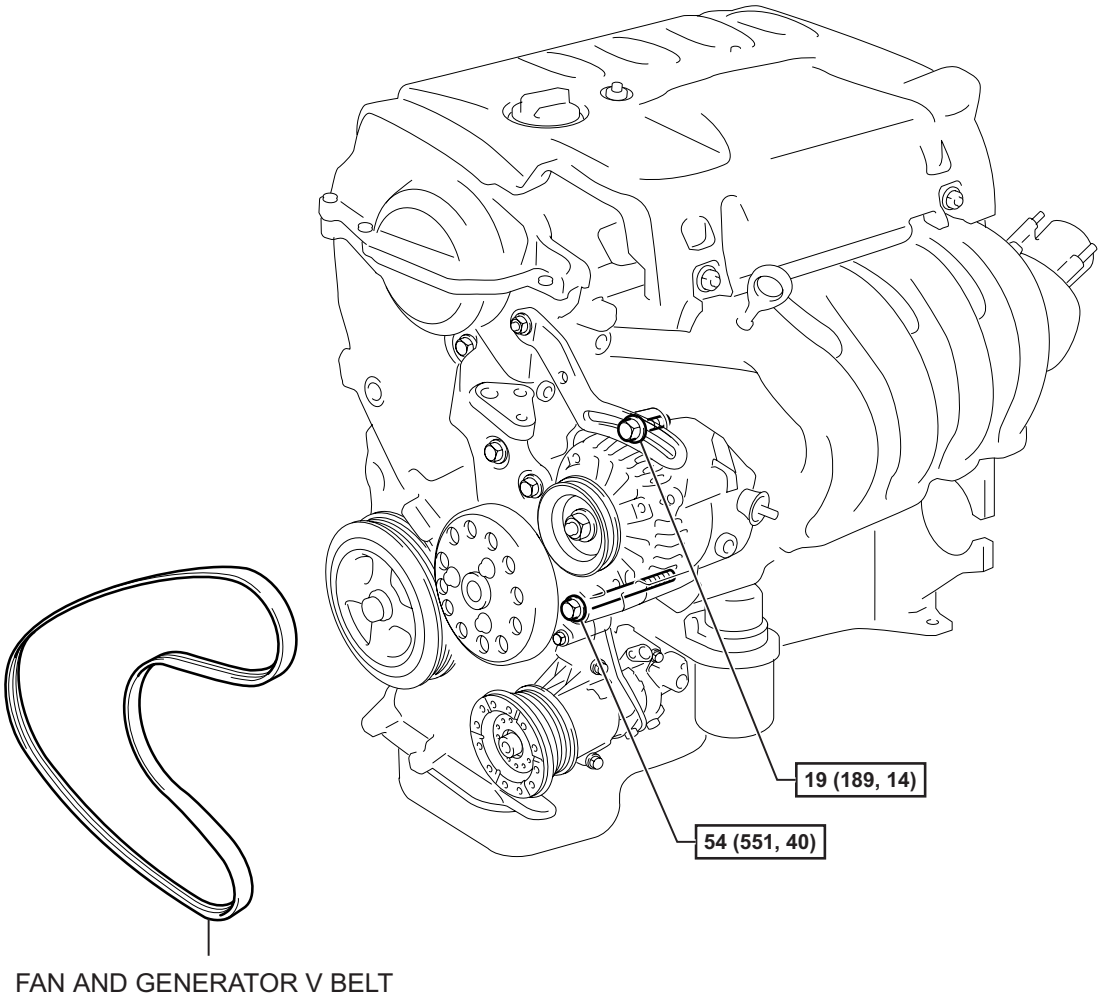

N*m (kgf*cm, ft.*lbf) : Specified torque

T

A116199E01

for Hatchback:

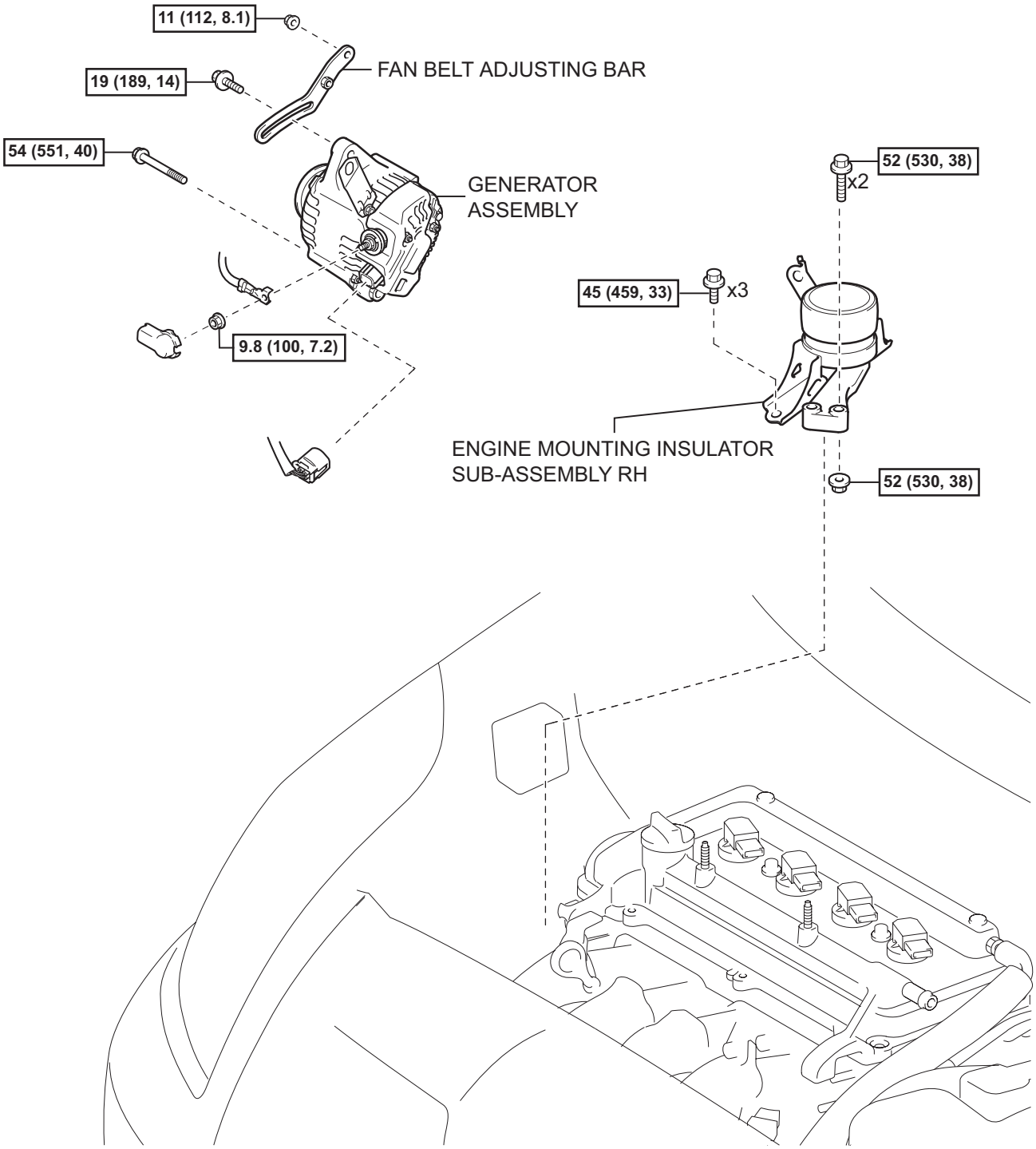

N*m (kgf*cm, ft.*lbf) : Specified torque

T

A116193E06

for Sedan:

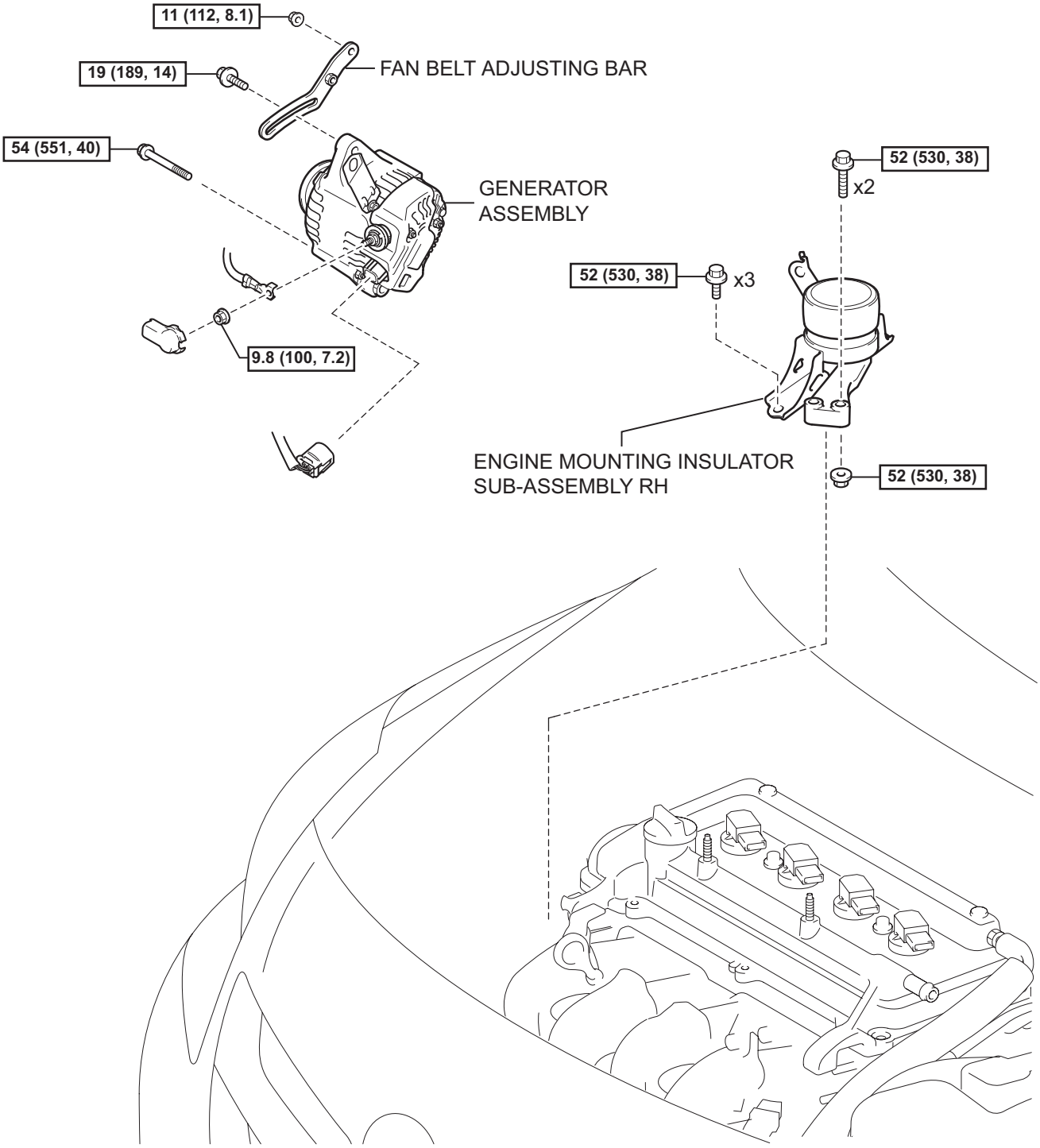

N*m (kgf*cm, ft*lbf) : Specified torque

T

A133594E01

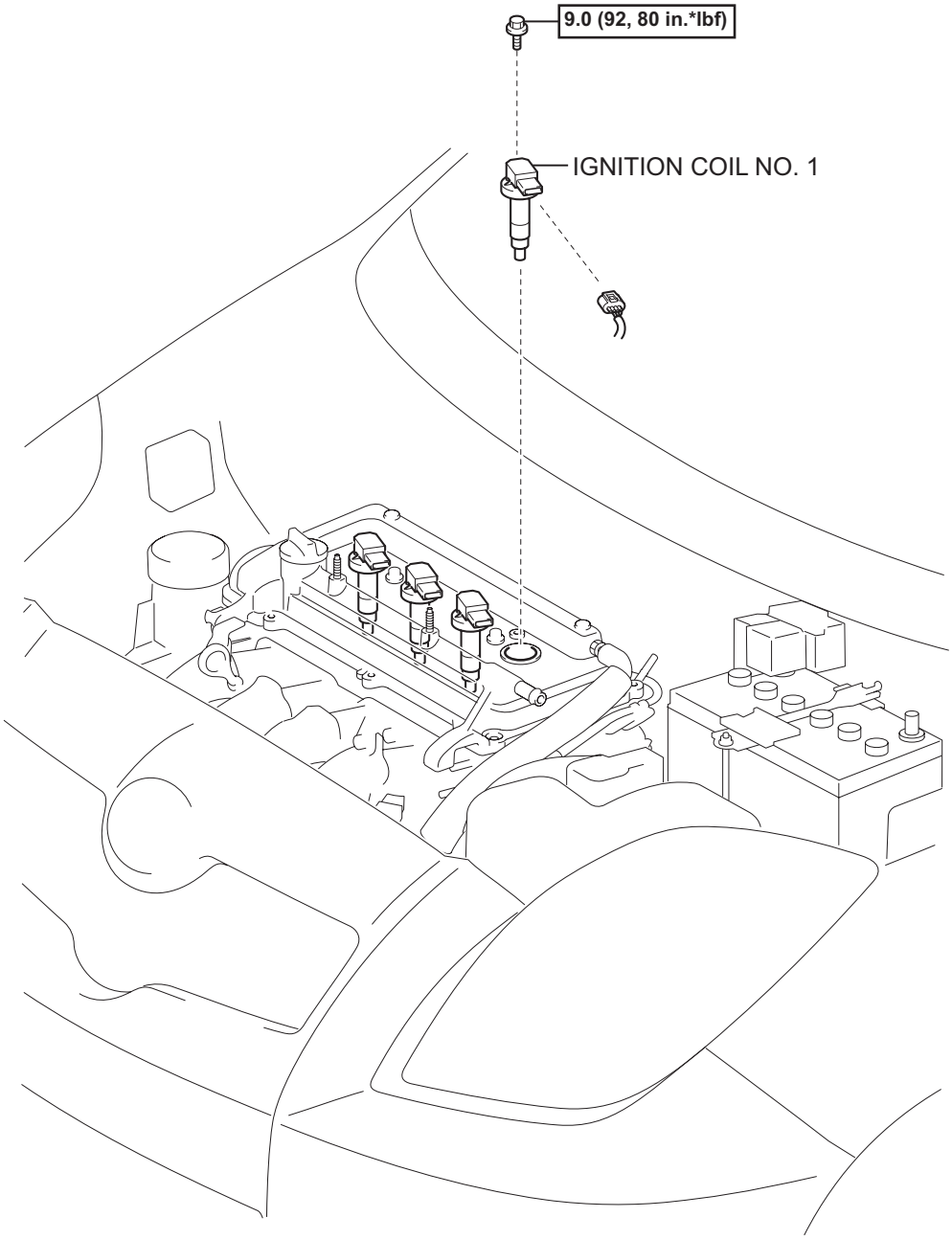

N*m (kgf*cm, ft.*lbf) : Specified torque

T

A115486E01

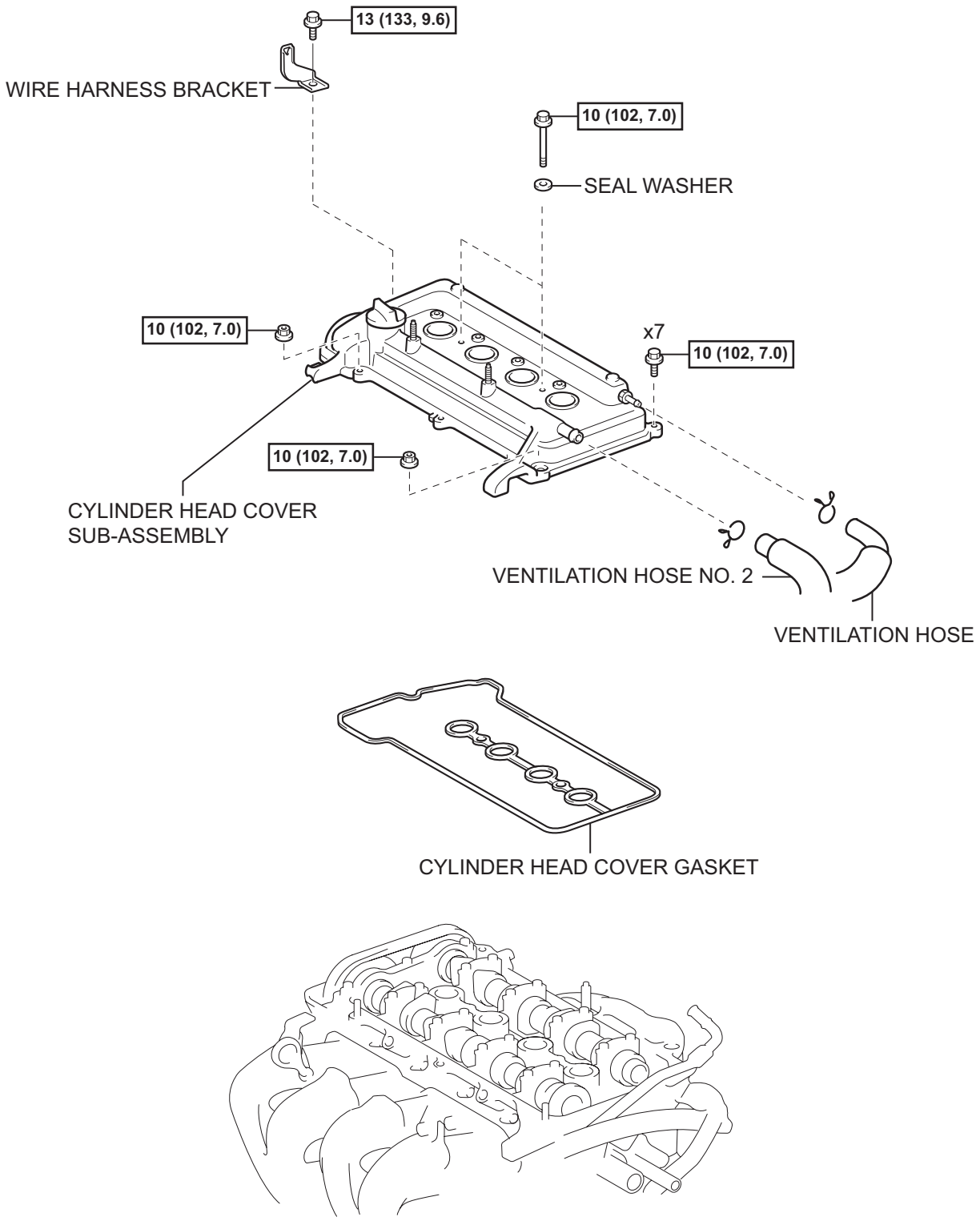

N*m (kgf*cm, ft.*lbf) : Specified torque

T

A115504E01

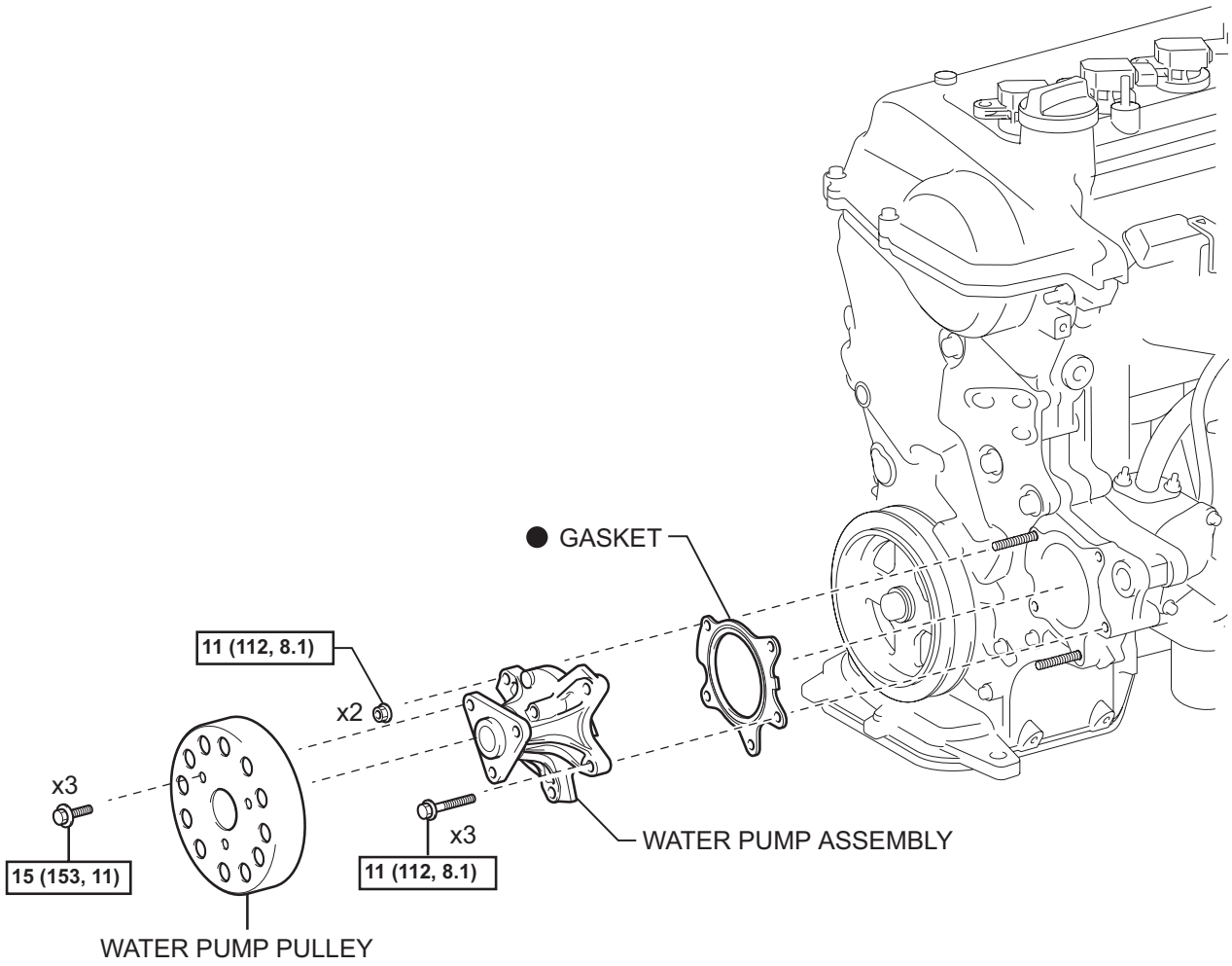

N*m (kgf*cm, ft.*lbf) : Specified torque

● Non-reusable part

T

A116194E01

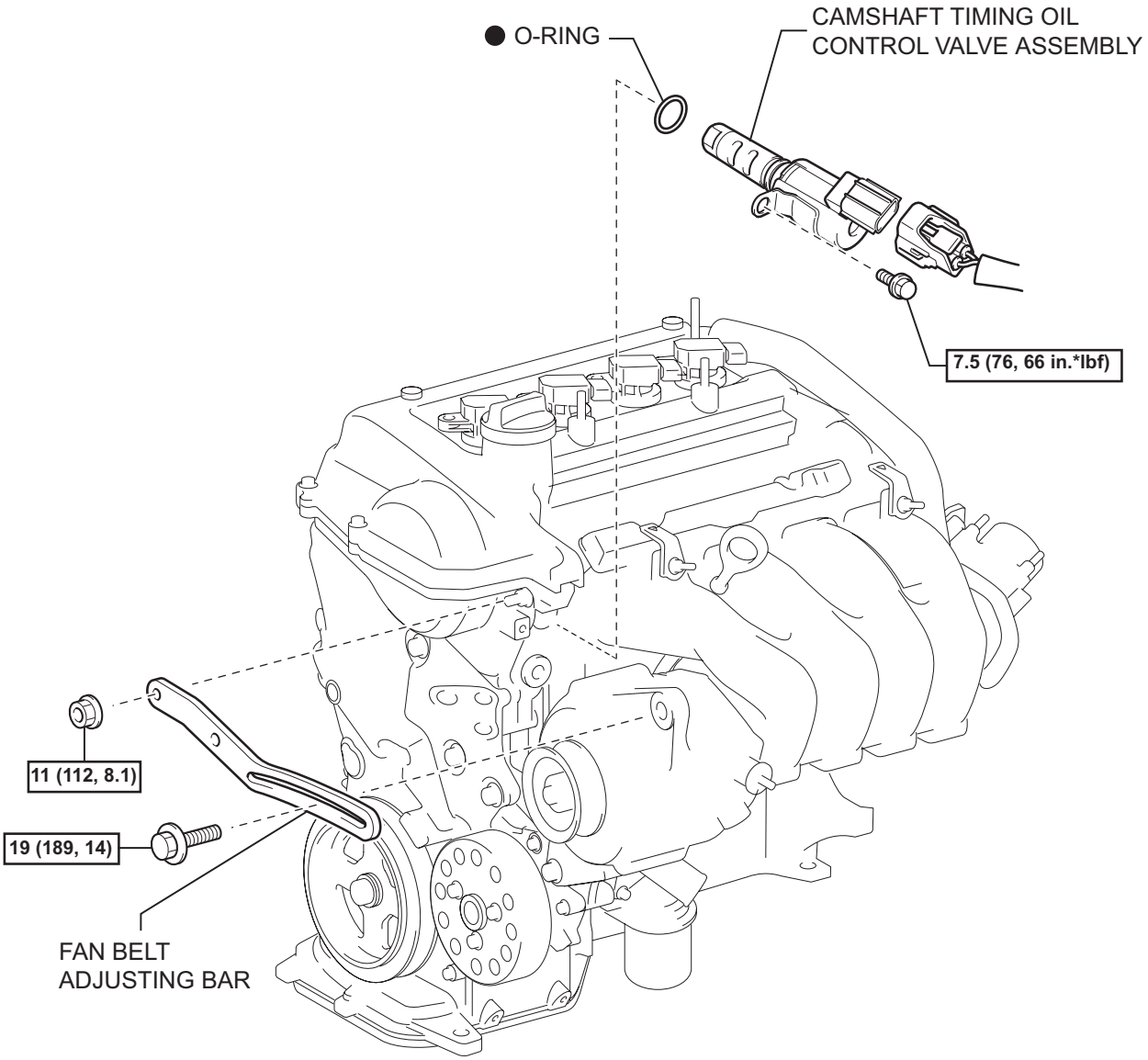

N*m (kgf*cm, ft.*lbf) : Specified torque

● Non-reusable part

T

A116180E01

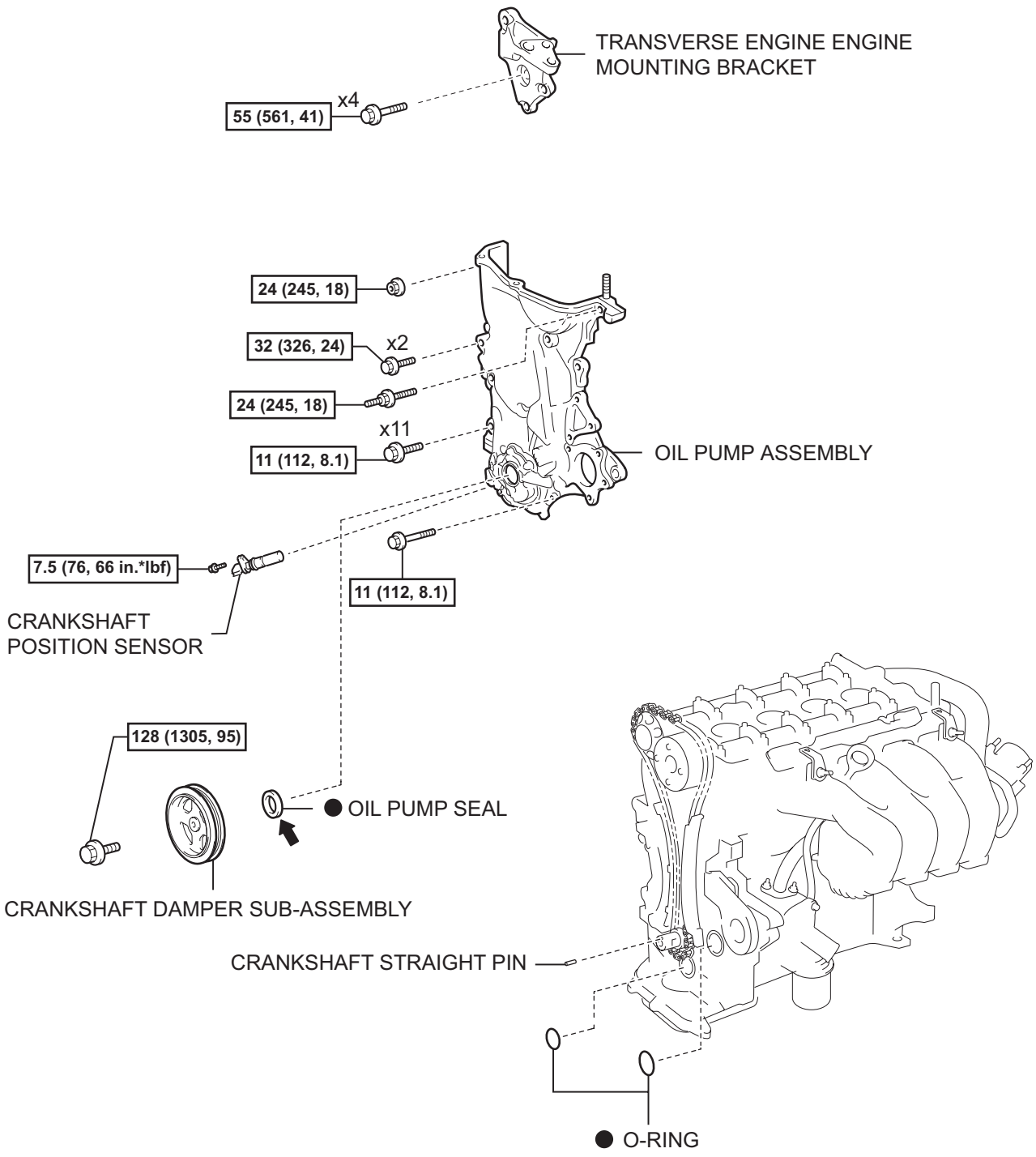

N*m (kgf*cm, ft.*lbf) : Specified torque

● Non-reusable part ⬅ Apply MP grease

T

A116559E01

LU

LU

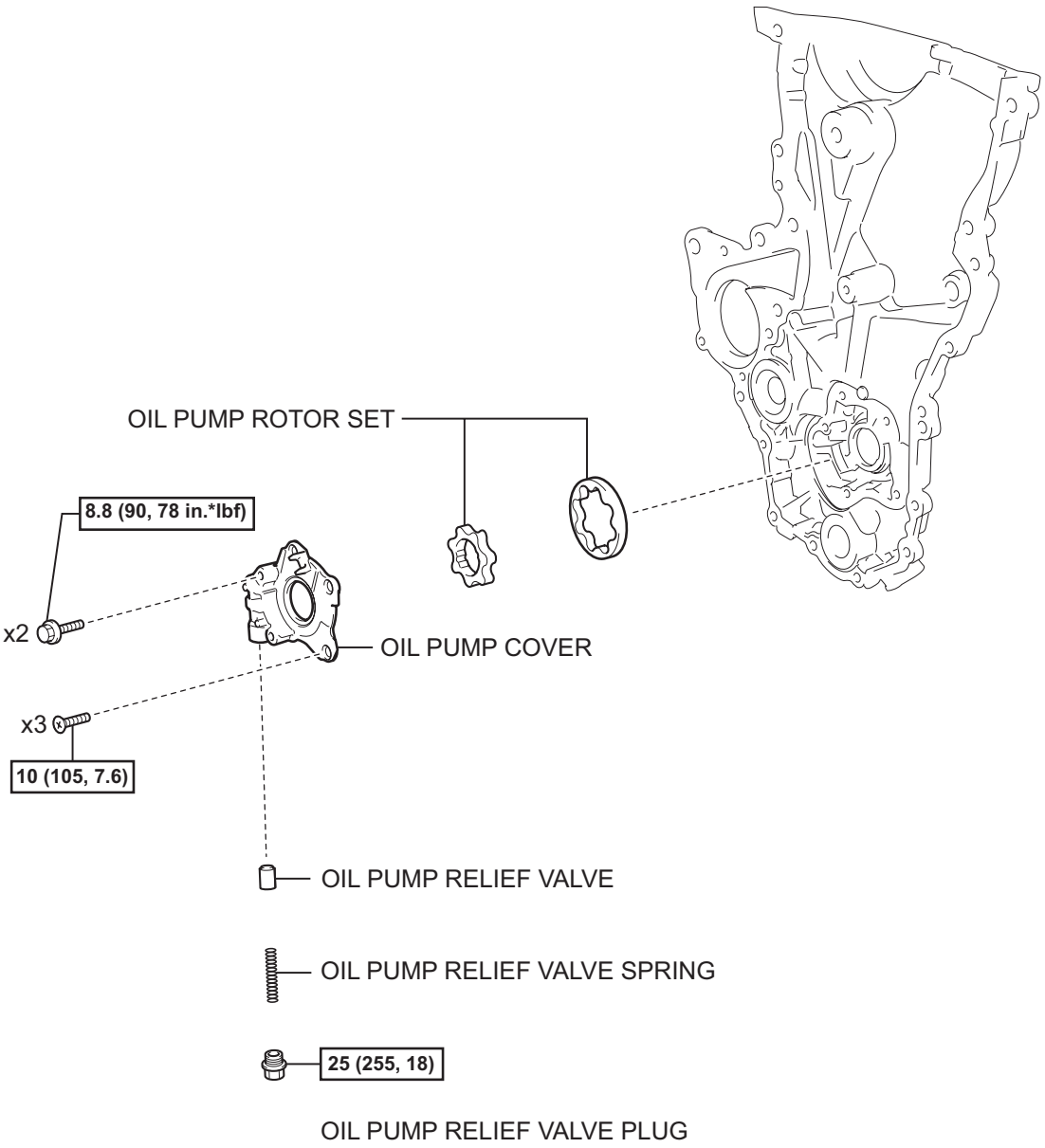

N*m (kgf*cm, ft.*lbf) : Specified torque

T

A116563E01

REMOVAL

1. **DISCONNECT CABLE FROM NEGATIVE BATTERY TERMINAL**
2. **REMOVE FRONT WHEEL RH**
3. **REMOVE ENGINE UNDER COVER RH**
4. **DRAIN ENGINE OIL**
5. **DRAIN ENGINE COOLANT (See page CO-8)**
6. **REMOVE CYLINDER HEAD COVER NO. 2 (See page IG-9)**
7. **REMOVE FAN AND GENERATOR V BELT (See page EM-7)**
8. **REMOVE GENERATOR ASSEMBLY (See page CH-12)**
9. **REMOVE IGNITION COIL NO. 1 (See page IG-9)**
10. **DISCONNECT VENTILATION HOSE (See page FU-13)**
11. **DISCONNECT VENTILATION HOSE NO. 2 (See page FU-13)**
12. **REMOVE CYLINDER HEAD COVER SUB-ASSEMBLY (See page FU-13)**
13. **REMOVE ENGINE MOUNTING INSULATOR SUB-ASSEMBLY RH**
    (a) Place a wooden block on a jack underneath the engine.

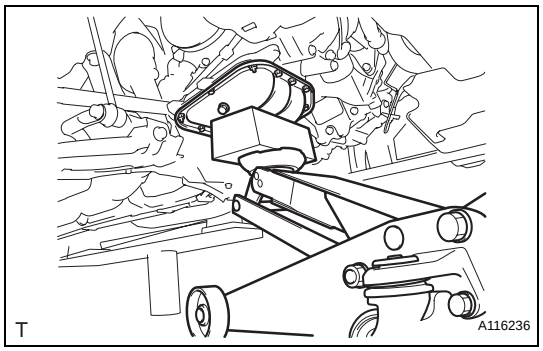

    (b) Remove the 5 bolts and nut and remove the engine mounting insulator sub-assembly RH.

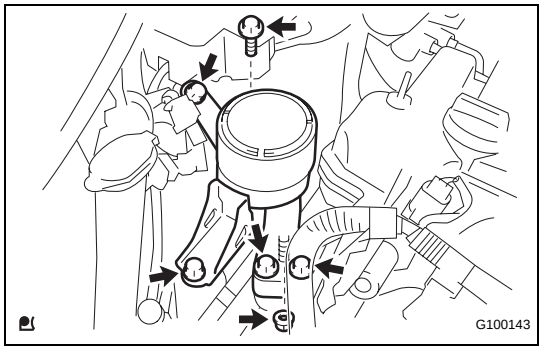

LU

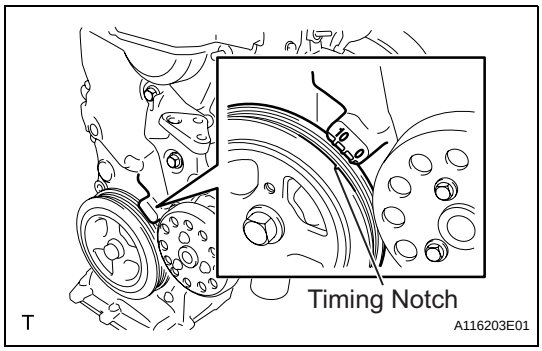

14. REMOVE CRANKSHAFT DAMPER SUB-ASSEMBLY

(a) Set cylinder No. 1 to TDC/compression.

(1) Turn the crankshaft damper sub-assembly, and align its timing notch with timing mark "0" of the oil pump.

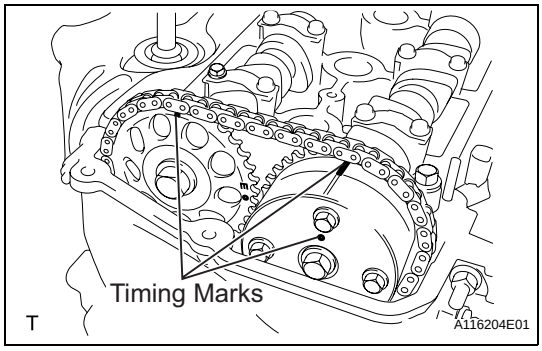

(2) Check that the timing marks on the camshaft timing sprocket and the camshaft timing gear are all facing upward as shown in the illustration.
If not, turn the crankshaft 1 complete revolution (360°) and align the marks as above.

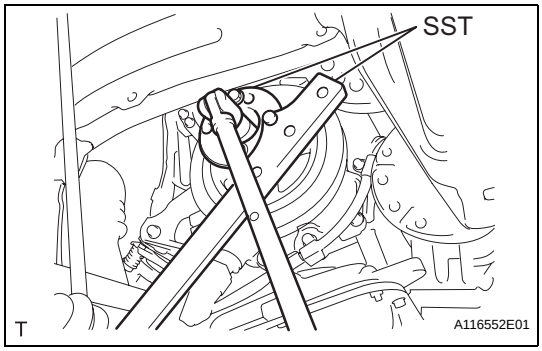

(b) Using 2 SSTs, loosen the bolt while holding the crankshaft damper sub-assembly.
SST 09213-14010 (91651-60865), 09330-00021
NOTICE:
Check the SST installation positions when installing them, to avoid the SST fixing bolts from coming into contact with the oil pump assembly.

(c) Remove the SSTs and the bolt.

(d) Remove the crankshaft damper sub-assembly.

15. REMOVE CRANKSHAFT POSITION SENSOR (See page ES-403)

16. REMOVE CAMSHAFT TIMING OIL CONTROL VALVE ASSEMBLY (See page ES-396)

17. REMOVE WATER PUMP PULLEY (See page CO-15)

18. REMOVE WATER PUMP ASSEMBLY (See page CO-15)

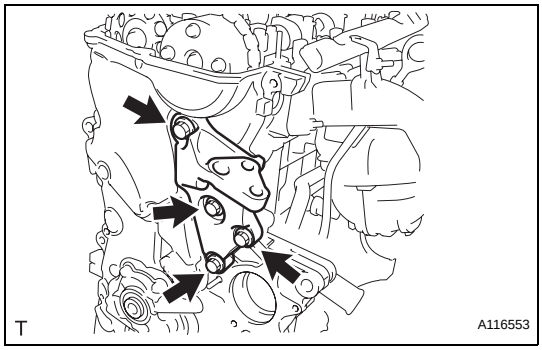

19. REMOVE TRANSVERSE ENGINE ENGINE MOUNTING BRACKET

(a) Remove the 4 bolts and remove the transverse engine engine mounting bracket.

LU

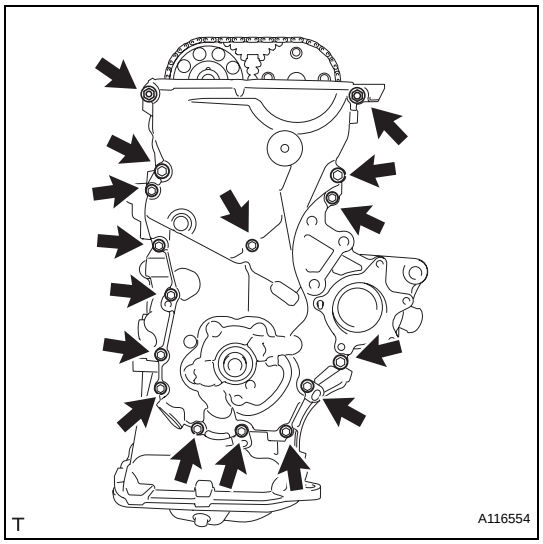

20. REMOVE OIL PUMP ASSEMBLY

(a) Remove the 15 bolts and the nut.

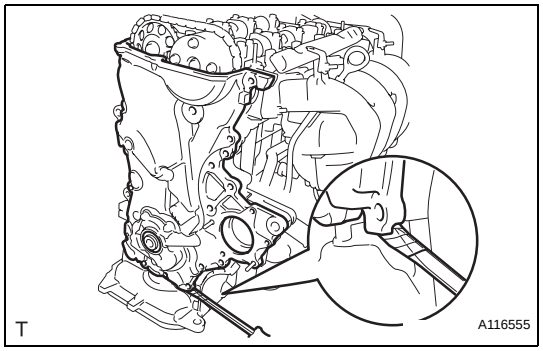

(b) Using a screwdriver with its tip wrapped in protective tape, prize the oil pump assembly to remove it.

NOTICE:

Do not damage the contact surfaces of the oil pump assembly or oil pan sub-assembly.

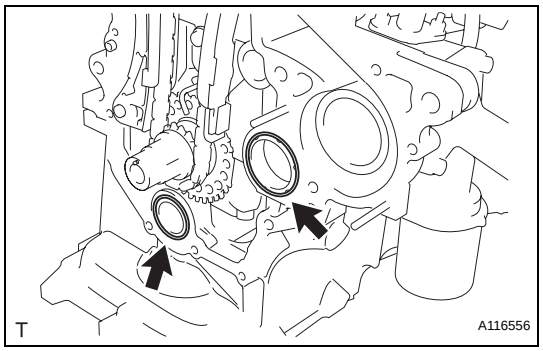

(c) Remove the 2 O-rings from the cylinder block and oil pan sub-assembly.

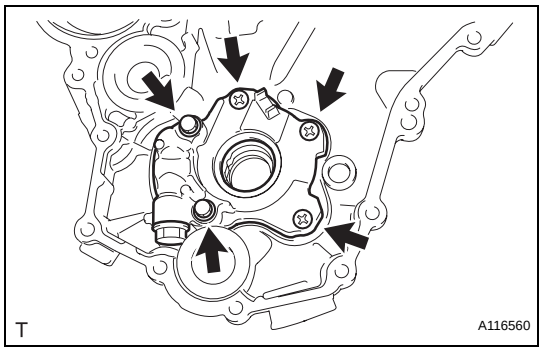

DISASSEMBLY

1. REMOVE OIL PUMP COVER

(a) Remove the 2 bolts and 3 screws and remove the oil pump cover.

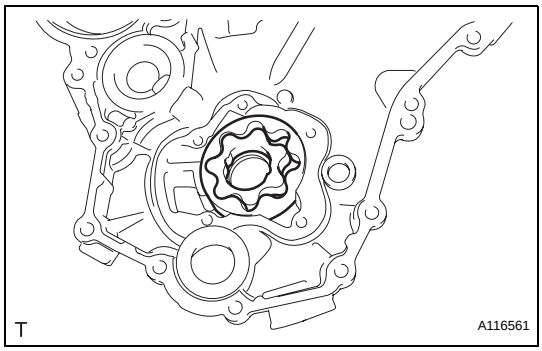

2. REMOVE OIL PUMP ROTOR SET

(a) Remove the oil pump rotor set.

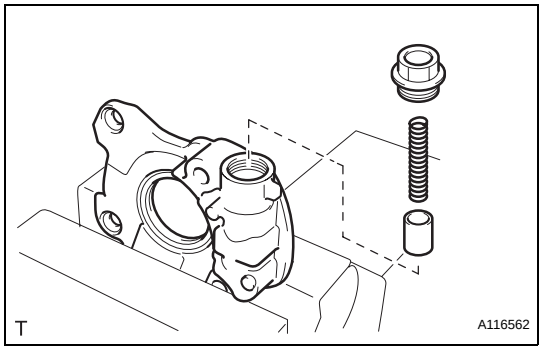

3. REMOVE OIL PUMP RELIEF VALVE

(a) Remove the oil pump relief valve plug, oil pump relief valve spring and oil pump relief valve.

INSPECTION

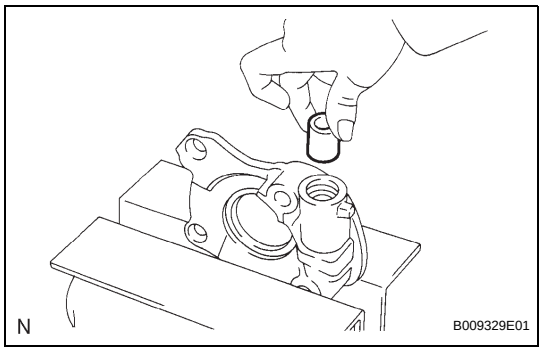

1. INSPECT OIL PUMP RELIEF VALVE

(a) Coat the oil pump relief valve with engine oil and check that it falls smoothly into the valve hole under its own weight.
If not, replace the oil pump relief valve. If necessary, replace the oil pump assembly.

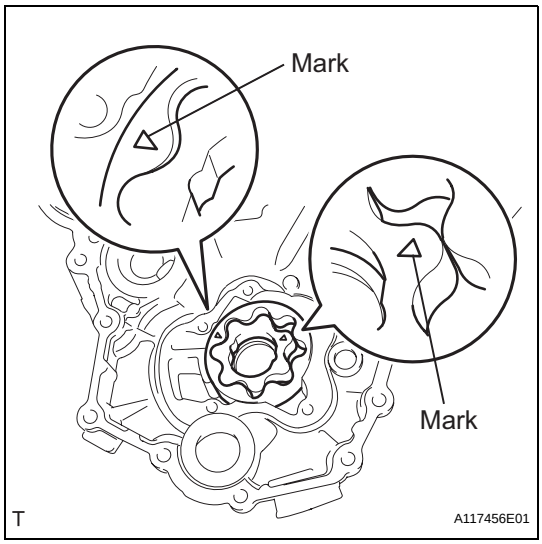

2. INSPECT OIL PUMP ROTOR SET

(a) Install the 2 rotors with both of the marks facing the oil pump cover side.

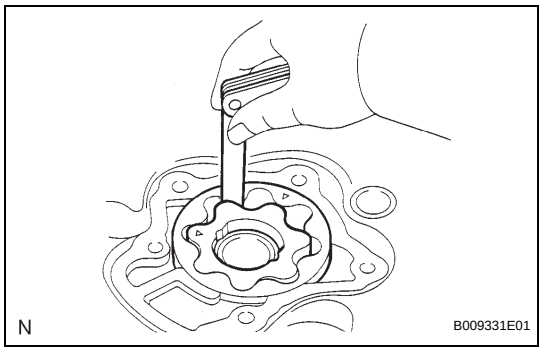

(b) Check the rotor tip clearance.
  (1) Using a feeler gauge, measure the clearance between the drive and driven rotor tips.
  Standard tip clearance:
  0.060 to 0.180 mm (0.0024 to 0.0071 in.)
  Maximum tip clearance:
  0.28 mm (0.0110 in.)
  If the tip clearance is greater than the maximum, replace the oil pump assembly.

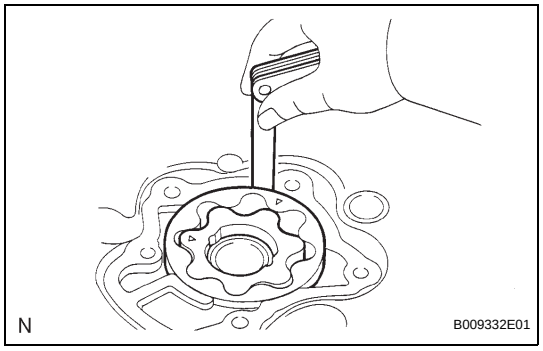

(c) Check the rotor body clearance.
  (1) Using a feeler gauge, measure the clearance between the driven rotor and the oil pump body.
  Standard body clearance:
  0.250 to 0.325 mm (0.0098 to 0.0128 in.)
  Maximum body clearance:
  0.425 mm (0.0167 in.)
  If the body clearance is greater than the maximum, replace the oil pump assembly.

REPLACEMENT

1. REMOVE OIL PUMP SEAL

(a) Using a screwdriver with its tip wrapped in protective tape, remove the oil pump seal.

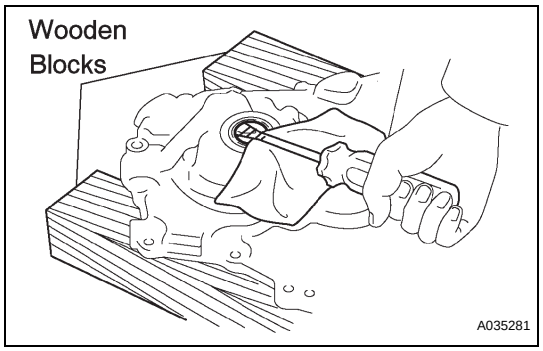

2. INSTALL OIL PUMP SEAL

(a) Using SST and a hammer, tap in a new oil seal until its surface is flush with the timing chain cover edge.
  SST 09950-60010 (09951-00250, 09951-00410, 09952-06010), 09950-70010 (09951-07100)
  NOTICE:
  Do not tap the oil seal at an angle.

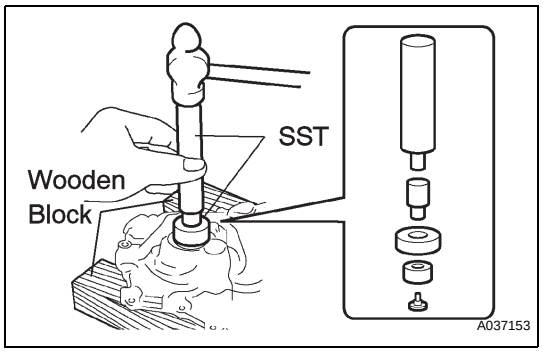

(b) Apply a light coat of MP grease to the oil pump seal lip.
  NOTICE:
  Keep the seal lip free of foreign matter.

REASSEMBLY

1. INSTALL OIL PUMP RELIEF VALVE

(a) Coat the oil pump relief valve with engine oil and insert the oil pump relief valve and oil pump relief valve spring into the oil pump cover.

(b) Install the oil pump relief valve plug.
  Torque: 25 N*m (255 kgf*cm, 18 ft.*lbf)

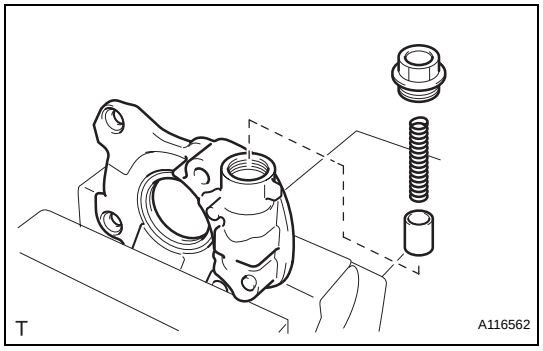

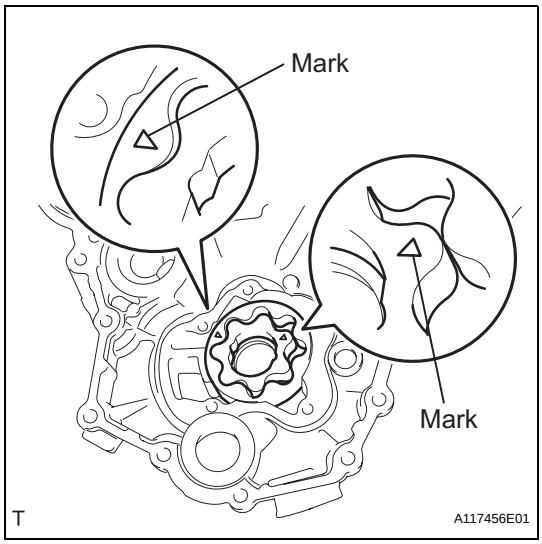

2. INSTALL OIL PUMP ROTOR SET

(a) Coat the oil pump rotor set with engine oil and place it into the oil pump body with the marks facing the oil pump cover side.

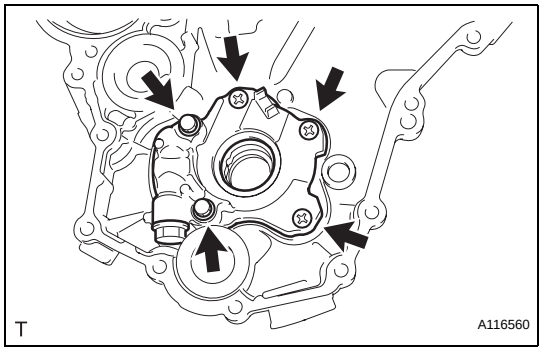

3. INSTALL OIL PUMP COVER

(a) Install the oil pump cover with the 2 bolts and 3 screws.

Torque: 8.8 N*m (90 kgf*cm, 78 in.*lbf) for bolt
10 N*m (105 kgf*cm, 7.6 ft.*lbf) for screw

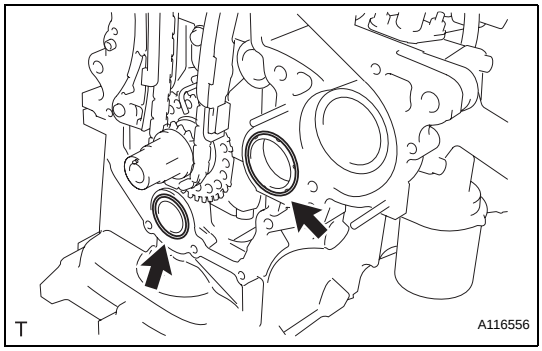

INSTALLATION

1. INSTALL OIL PUMP ASSEMBLY

(a) Install 2 new O-rings in the 2 locations shown in the illustration.

(b) Apply seal packing to the oil pump assembly, cylinder head and cylinder block as shown in the illustration.

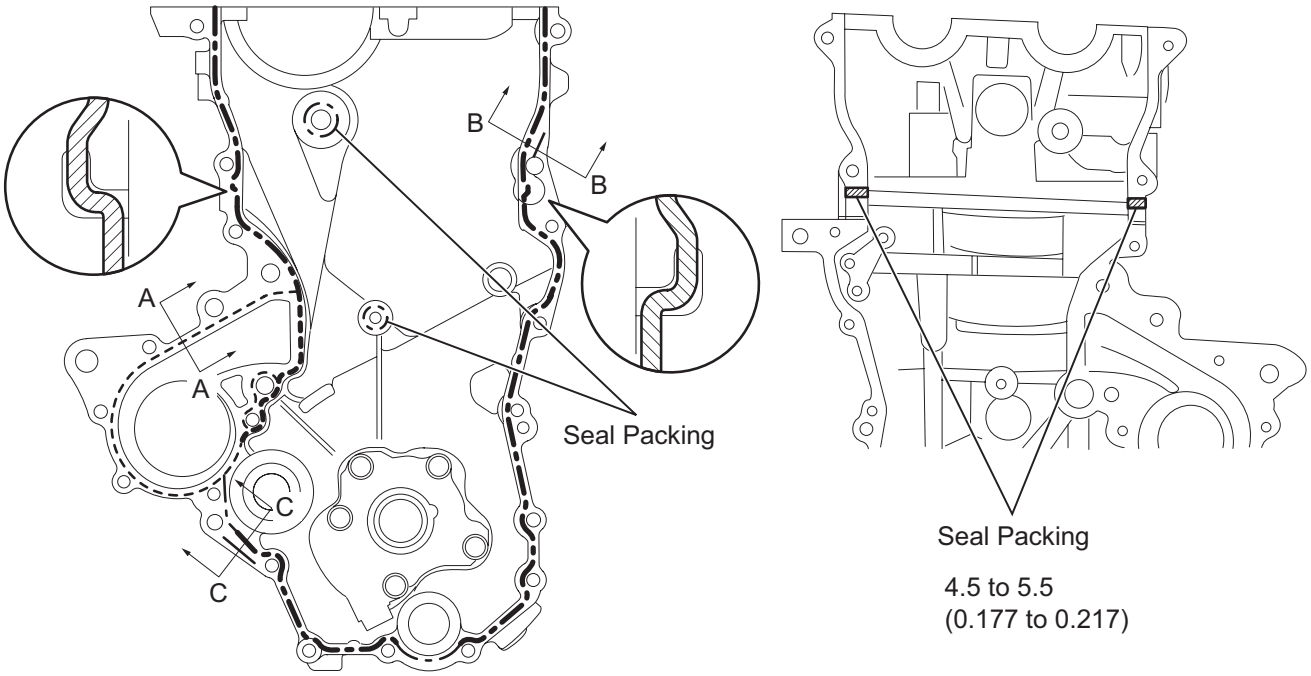

A-A

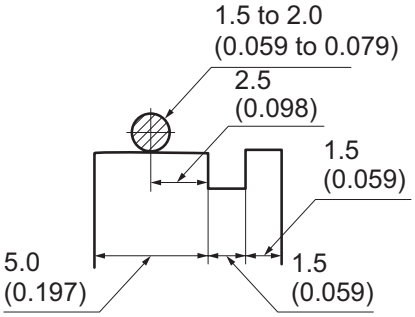

B-B, C-C

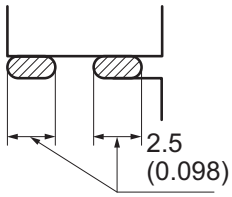

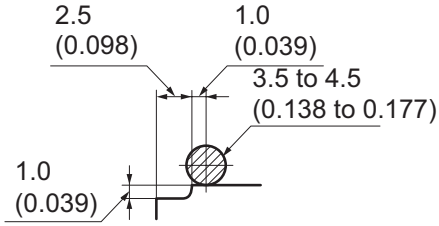

Seal Width (Other Part)

3.5 to 4.5 (0.138 to 0.177)

1.5 to 2.0 (0.059 to 0.079)

Seal Width (Water Pump Part)

3.5 to 4.5 (0.138 to 0.177)

1.5 to 2.0 (0.059 to 0.079)

mm (in.)

T

A116557E01

LU

Seal packing:
Water pump part Toyota Genuine Seal Packing 1282B, Three Bond 1282B or Equivalent
Other part Toyota Genuine Seal Packing Black, Three Bond 1207B or Equivalent

NOTICE:
- **Remove any oil from the contact surfaces.**
- **Install the oil pump assembly within 3 minutes and tighten the bolts and nut within 15 minutes of applying the seal packing.**
- **Do not expose the seal to engine oil for at least 2 hours after the installation.**

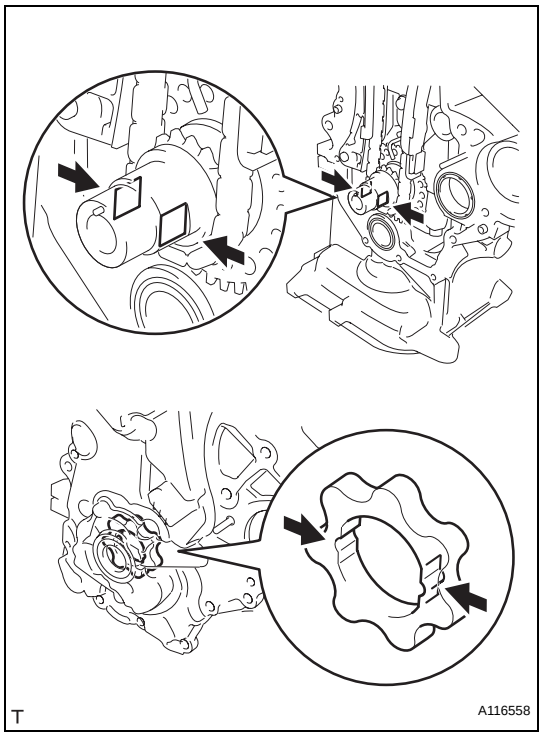

(c) Align the keyway of the oil pump rotor with the rectangular portion of the crankshaft, and slide the oil pump into place.

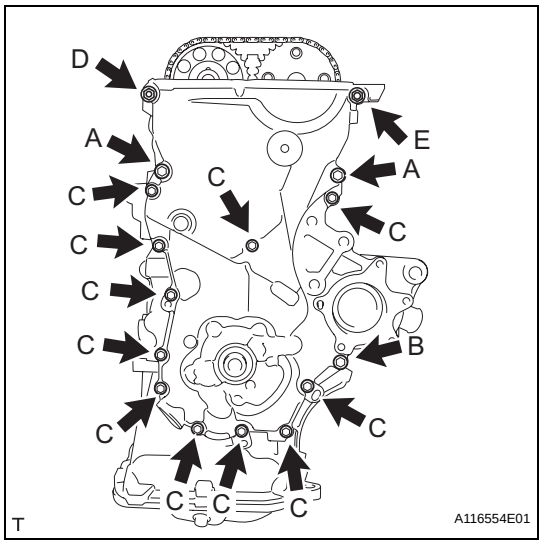

(d) Install the oil pump assembly with the 15 bolts and the nut. Tighten the bolts and nut uniformly in several steps.

Torque: 32 N*m (326 kgf*cm, 24 ft.*lbf) for bolt A
11 N*m (112 kgf*cm, 8.1 ft.*lbf) for bolt B
11 N*m (112 kgf*cm, 8.1 ft.*lbf) for bolt C
24 N*m (245 kgf*cm, 18 ft.*lbf) for nut D
24 N*m (245 kgf*cm, 18 ft.*lbf) for bolt E

NOTICE:
After installing the oil pump assembly, install the mounting bracket and water pump within 15 minutes.

HINT:
Each bolt length is as follows.
A: 30 mm (1.181 in.)
B: 35 mm (1.378 in.)
C: 20 mm (0.787 in.)

E: 14 to 20 mm (0.551 to 0.787 in.), Double ended bolt

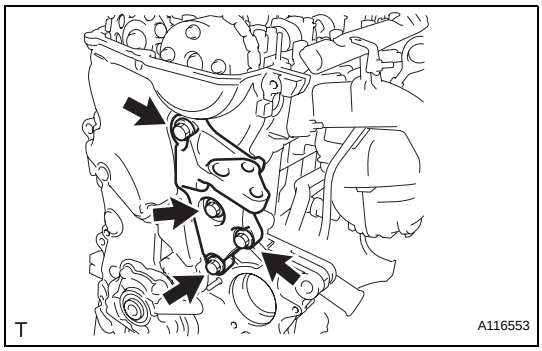

2. **INSTALL TRANSVERSE ENGINE ENGINE MOUNTING BRACKET**
   (a) Install the transverse engine engine mounting bracket with the 4 bolts.
   Torque: 55 N*m (561 kgf*cm, 41 ft.*lbf)

3. **INSTALL WATER PUMP ASSEMBLY (See page CO-16)**

4. **INSTALL WATER PUMP PULLEY (See page CO-16)**

5. **INSTALL CAMSHAFT TIMING OIL CONTROL VALVE ASSEMBLY (See page ES-397)**

6. **INSTALL CRANKSHAFT POSITION SENSOR (See page ES-400)**

7. **INSTALL CRANKSHAFT DAMPER SUB-ASSEMBLY**
   (a) Align the pin hole in the crankshaft damper with the pin and install the crankshaft damper sub-assembly.
   (b) Provisionally install the bolt.
   (c) Using 2 SSTs, tighten the bolt while holding the crankshaft damper sub-assembly.
   SST 09213-14010 (91651-60865), 09330-00021
   Torque: 128 N*m (1,305 kgf*cm, 95 ft.*lbf)
   NOTICE:
   Check the SST installation positions when installing them, to avoid the SST fixing bolts from coming into contact with the oil pump assembly.

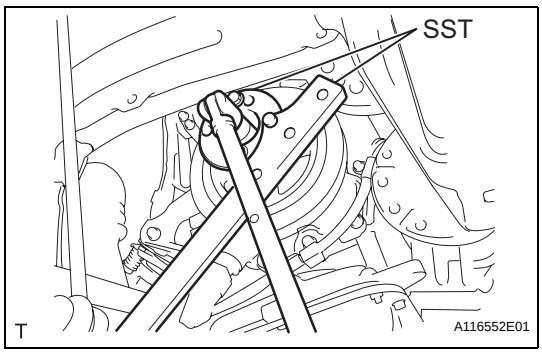

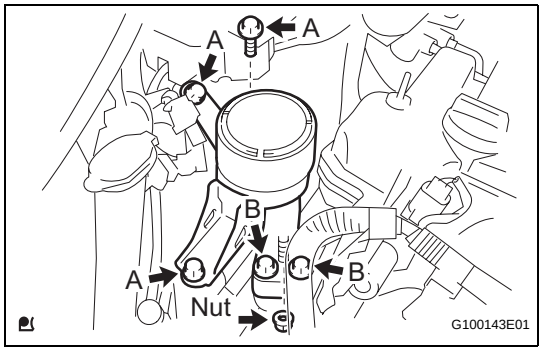

8. **INSTALL ENGINE MOUNTING INSULATOR SUB-ASSEMBLY RH (for Hatchback)**
   (a) Install the engine mounting insulator sub-assembly RH with the 5 bolts and nut.
   Torque: 45 N*m (459 kgf*cm, 33 ft.*lbf) for bolt A
   52 N*m (530 kgf*cm, 38 ft.*lbf) for bolt B and nut

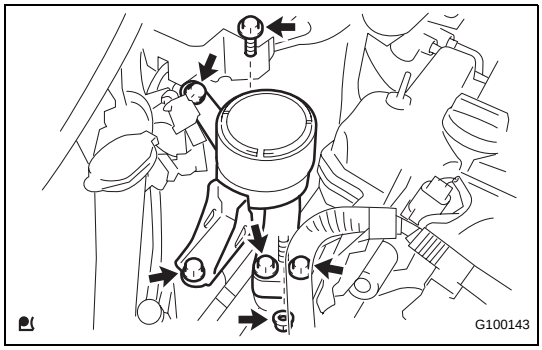

9. **INSTALL ENGINE MOUNTING INSULATOR SUB-ASSEMBLY RH (for Sedan)**
   (a) Install the engine mounting insulator sub-assembly RH with the 5 bolts and nut.
   Torque: 52 N*m (530 kgf*cm, 38 ft.*lbf)

10. **INSTALL CYLINDER HEAD COVER SUB-ASSEMBLY (See page FU-19)**

11. **INSTALL VENTILATION HOSE NO. 2 (See page FU-20)**

12. **INSTALL VENTILATION HOSE (See page FU-20)**

13. **INSTALL IGNITION COIL NO. 1 (See page IG-9)**
14. **INSTALL GENERATOR ASSEMBLY (See page CH-17)**
15. **INSTALL FAN AND GENERATOR V BELT (See page EM-7)**
16. **ADJUST FAN AND GENERATOR V BELT (See page EM-7)**
17. **INSPECT FAN AND GENERATOR V BELT (See page EM-8)**
18. **CONNECT CABLE TO NEGATIVE BATTERY TERMINAL**
    Torque: 5.4 N*m (55 kgf*cm, 48 in.*lbf)
19. **ADD ENGINE OIL**
20. **ADD ENGINE COOLANT (See page CO-8)**
21. **CHECK ENGINE OIL LEVEL (See page LU-1)**
22. **CHECK FOR ENGINE OIL LEAKAGE**
23. **CHECK FOR ENGINE COOLANT LEAKAGE (See page CO-1)**
24. **INSTALL CYLINDER HEAD COVER NO. 2 (See page IG-10)**
25. **INSTALL ENGINE UNDER COVER RH**
26. **INSTALL FRONT WHEEL RH**
    Torque: 103 N*m (1050 kgf*cm, 76 ft.*lbf)