ENGINE MECHANICAL

SECTION EM

CONTENTS

PRECAUTIONS AND PREPARATIONS

Precautions 3
Precautions in Liquid Gasket Application Procedure 4
Preparations 5

NOISE, VIBRATION AND HARSHNESS (NVH) TROUBLESHOOTING

NVH Troubleshooting - Engine Noise 9

OUTER COMPONENT PARTS

Removal • Installation 11

MEASUREMENT OF COMPRESSION PRESSURE

Measurement of Compression Pressure 14

DRIVE BELTS

Checking 15

AIR CLEANER

Cleaning and Changing 16

SPARK PLUG

Cleaning and Changing 17

OIL PAN

Components 18
Removal 18
Installation 19

TIMING CHAIN

Components 21
Removal 22
Inspection After Removal 29
Installation 30
Inspection After Installation 36

OIL SEAL

Replacement 37

CYLINDER HEAD

Components 40
Disassembly 42
Inspection 43
Valve Clearance 50
Assembly 52
Installation 53

ENGINE ASSEMBLY

Removal • Installation 56
Removal 57
Installation 59
Inspection After Installation 59

CYLINDER BLOCK

Components 60
Removal • Installation 61
Disassembly 61
Inspection 64
Assembly 71

CONTENTS

SERVICE DATA AND SPECIFICATIONS (SDS)

General Specifications 75
Belt Deflection, Spark Plug, Cylinder Head 76
Valve 77
Camshaft and Camshaft Bearing 82
Cylinder Block 83
Piston, Piston Ring and Piston Pin 84
Crankshaft, Main Bearing 86
Connecting Rod Bearing, Miscellaneous Components 87

Precautions

Coolant Drain

- Drain the coolant when it completely cooled down.

Fuel Line Removal

- Work in location without any fire.
- Release the fuel pressure prior to work.
- After removal, place a cap at the fuel lines to prevent fuel leakage.

Removal and Disassembly

- Work safely with correct special tools where it is instructed.
- Be extra careful not to damage the mating surfaces.
- Block with tapes if necessary to prevent foreign particles entering into the engine.
- Arrange properly in order all the removed components to facilitate inspection and assembly.
- In principle, loosen the bolts and nuts from the outer edge diagonally. Follow the instructions when special instructions are given.

Inspection, Adjustment and Replacement

- Adjust or replace after through component inspection according to inspection methods. The same applies for new components. Replace if necessary.

Assembly and Installation

- Always use torque wrench for bolt and nut tightening.
- In principle, tighten the bolts and nuts 2 to 3 times little by little from the center diagonally. Follow the instructions when special instructions are given.
- Replace the gasket, packing, oil seal, and O-ring with new.
- Clean and air-blow all components. Be careful not to clog the oil and coolant passages.
- Be careful not to damage the mating surfaces and clean all dusts and foreign particles. Properly apply engine oil on the mating surfaces and then assemble.
- When coolant is drained, bleed the air from the coolant passages.
- After the assembly has completed, run the engine and check for any coolant, oils and exhaust gas leakage.

Parts Requiring Angular Tightening

- Use angle wrench (SST: KV10112100) for the following components.
  - Cylinder head bolt
  - Connecting rod cap nut
- The designated tightening torque for the components is not the final tightening value. It is the torque needed before the angular tightening.
- Check for any foreign particles at the nut or bolt and mating surfaces. Apply engine oil before tightening.

Precautions in Liquid Gasket Application Procedure

Parts Requiring Angular Tightening

- Use angle wrench (SST: KV10112100) for the final tightening of the following engine parts:
  a) Cylinder head bolt
  b) Main bearing cap bolt
  c) Connecting rod cap nut
- Do not use a torque value for final tightening. The torque value for these parts are for a preliminary step.
- Ensure thread and seat surfaces are clean and coated with engine oil.

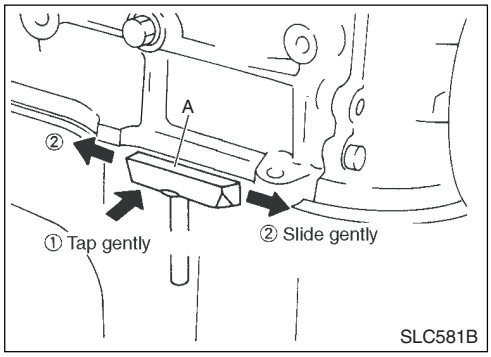

Removal of Liquid Gasket

- Remove the bolts and nuts. Then cut and remove the liquid gasket using a seal cutter (A: KV10111100).

CAUTION:

- **Be careful not to damage the mating surfaces.**

- For locations hard to use the seal cutter, apply plastic hammer gently and remove.

CAUTION:

- **When it is necessary to use the minus (-) screwdriver, be careful not to damage the mating surfaces.**

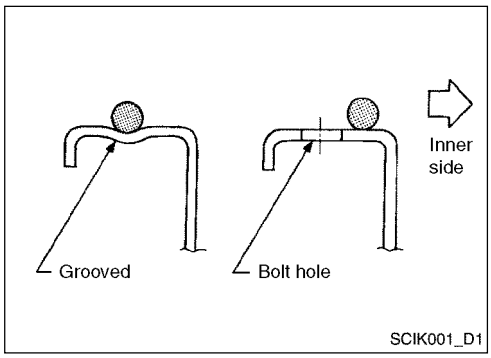

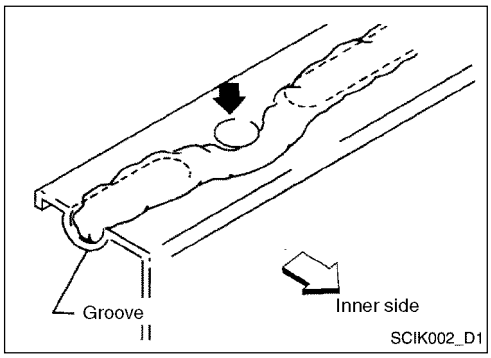

Liquid Gasket Application

1. Using scraper, remove old liquid gasket adhering to the liquid gasket application surface and the mating surface. Remove liquid gasket completely from the groove of the liquid gasket application surface, mounting bolts and bolt holes.

CAUTION:

- **Be careful not to damage the mating surfaces.**

2. Apply liquid gaskert without breaks to the specified location.
   - Use Genuine Liquid Gasket or equivalent.
   - For oil pan, be sure liquid gasket diameter is 3.5 to 4.5 mm (0.138 to 0.177 in).
   - For areas except oil pan, be sure liquid gasket diameter is 2.0 to 3.0 mm (0.079 to 0.118 in).
3. As for the bolt holes, normally apply liquid gasket inside the holes (unless otherwise specified).
   - Within 5 minutes of liquid gasket application, install the mating component.
   - Wait at least 30 minutes before refilling engine oil and engine coolant.

CAUTION:

- **If instructed in this Manual, follow the instructions.**

Preparations

Special Service Tools

Item	Description	
Seal cutter KV10111100	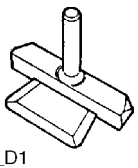 ZZA0013D_D1	Removing applied liquid gasket
Valve oil seal drift KV10115600	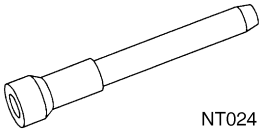 NT024	Installing valve oil seal
KV101092S0 Valve spring compressor 1. KV10115900 Compressor 2. KV10109230 Adapter	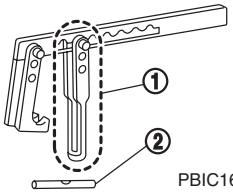 PBIC1650E	Compressing valve spring
Angle wrench KV10112100	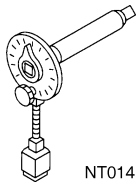 NT014	Tightening bolts for bearing cap, cylinder head, etc. in angle
KV101151S0 Lifter stopper set 1. KV10115110 Camshaft pliers 2. KV10115120 Lifter stopper	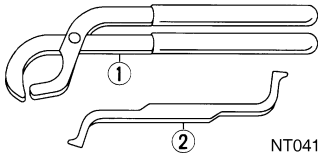 NT041	Changing shims
Valve oil seal puller KV10107902	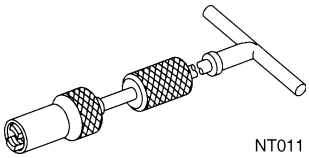 NT011	Removing valve oil seal
Engine attachment assembly 1. KV10106500 Engine attachment 2. KV10113300 Sub-attachment	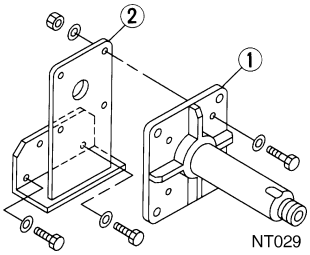 NT029	Overhauling engine

Item	Description	
Front oil seal drift ST33230000	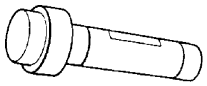 ZZA0012D	Assembling front cover oil seal
KV101056S0 Ring gear stopper 1. KV10105620 Adapter 2. KV10105610 Plate assembly	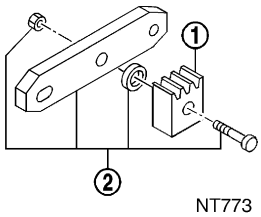 NT773	Preventing crankshaft and drive plate from rotating

Commercial Service Tools

Item		
Spark plug wrench	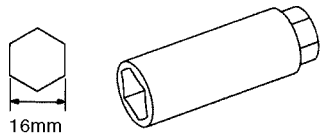 NT047	Removing and installing spark plug
Valve seat cutter set	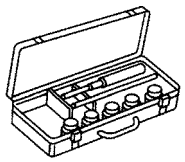 NT048	Finishing valve seat dimensions
Piston ring expander	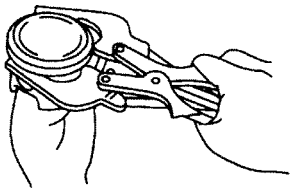 NT030	Removing and installing piston ring
Valve guide drift	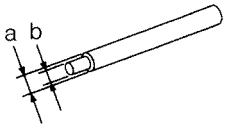 NT015	Removing and installing valve guide Intake & Exhaust a: dia. 95 mm b: dia. 55 mm
Cylinder head bolt wrench	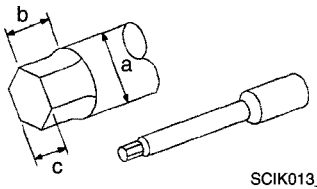 SCIK013_D1	Loosening and tightening cylinder head bolt a: dia. 13 mm b: 12 mm c: 10 mm
Valve guide reamer	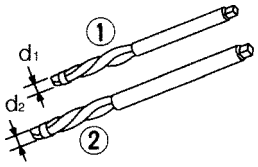 NT016	Reaming valve guide 1 or hole for oversize valve guide 2 Intake & Exhaust a: dia. 5.5 mm b: dia. 9.685 mm
Front oil seal drift	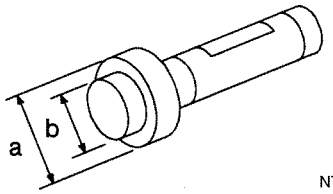 NT049	Installing front oil seal a: dia. 52 mm b: dia. 40 mm

Item	Description	
Rear oil seal drift	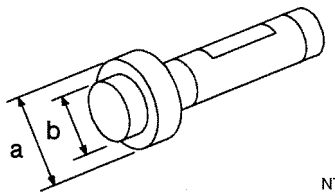 NT049	Installing rear oil seal a: dia. 103 mm b: dia. 84 mm
Oxygen sensor thread cleaner	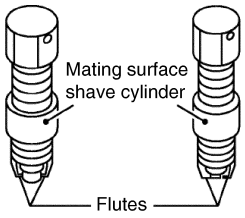 SCIK014_D1	Reconditioning the exhaust system threads before installing a new heated oxygen sensor. Use with anti-seize lubricant. a: 18 mm dia. with a pitch of 1.5 mm (for zirconia heated oxygen sensor) b: 12 mm dia. with a pitch of 1.25 mm (for titania oxygen sensor)
Anti-seize lubricant (Pematex 133AR or Equivalent meeting MIL specification MIL-A-907)	 SCIK015_D1	Lubricating heated oxygen sensor thread clearing tool when reconditioning exhaust system threads

NVH Troubleshooting - Engine Noise

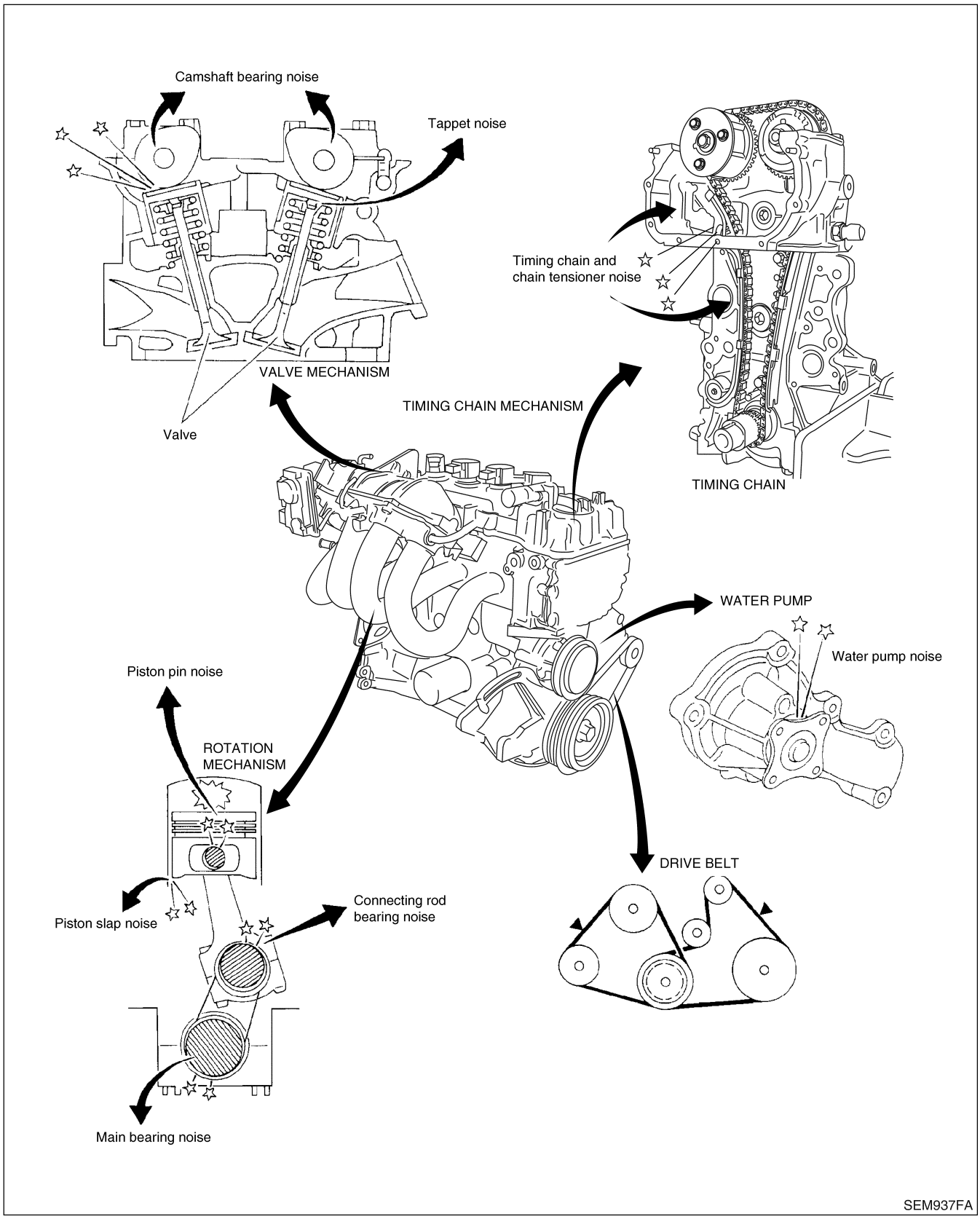

NVH Troubleshooting - Engine Noise (Cont'd)

NVH Troubleshooting - Engine Noise

Use the chart below to help you find the cause of the symptom.

1. Locate the area where noise occurs.
2. Confirm the type of noise.
3. Specify the operating condition of engine.
4. Check specified noise source.
   If necessary, repair or replace these parts.

Location of noise	Type of noise	Operating condition of engine						Source of noise	Check item	Reference page
		Before warmup	After warmup	When starting	When idling	When racing	While driving			
Top of Engine, Rocker Cover, Cylinder Head	Ticking or click	C	A	-	A	B	-	Tappet noise	Valve clearance	EM-52
	Rattle	C	A	-	A	B	C	Camshaft bearing noise	Camshaft journal clearance, Camshaft runout	EM-44
Crankshaft Pulley, Cylinder block (Side of Engine), Oil pan	Slap or knock	-	A	-	B	B	-	Piston pin noise	Piston and piston pin clearance, Connecting rod bushing clearance	EM-65, 70
	Slap or rap	A	-	-	B	B	A	Piston slap noise	Piston-to-bore clearance, Piston ring side clearance, Piston ring end gap, Connecting rod bend and torsion	EM-65, 66
	Knock	A	B	C	B	B	B	Connecting rod-bearing noise	Connecting rod bearing clearance (Big end), Connecting rod bushing clearance (Small end)	EM-69
	Knock	A	B	-	A	B	C	Main bearing noise	Main bearing oil clearance, Crankshaft runout	EM-68
Front of Engine, Timing Chain Cover	Tapping or ticking	A	A	-	B	B	B	Timing chain and chain tensioner noise	Timing chain cracks and wear, Timing chain tensioner operation	EM-29
Front of Engine	Squeak or fizzing	A	B	-	B	-	C	Drive belts (sticking or slipping)	Drive belts deflection	EM-15
	Creaking	A	B	A	B	A	B	Drive belts (slipping)	Idler pulley bearing operation	
	Squall or creak	A	B	-	B	A	B	Water pump noise	Water pump operation	LC

A: Closely related B: Related C: Sometimes related —: Not related

Removal • Installation

Removal • Installation

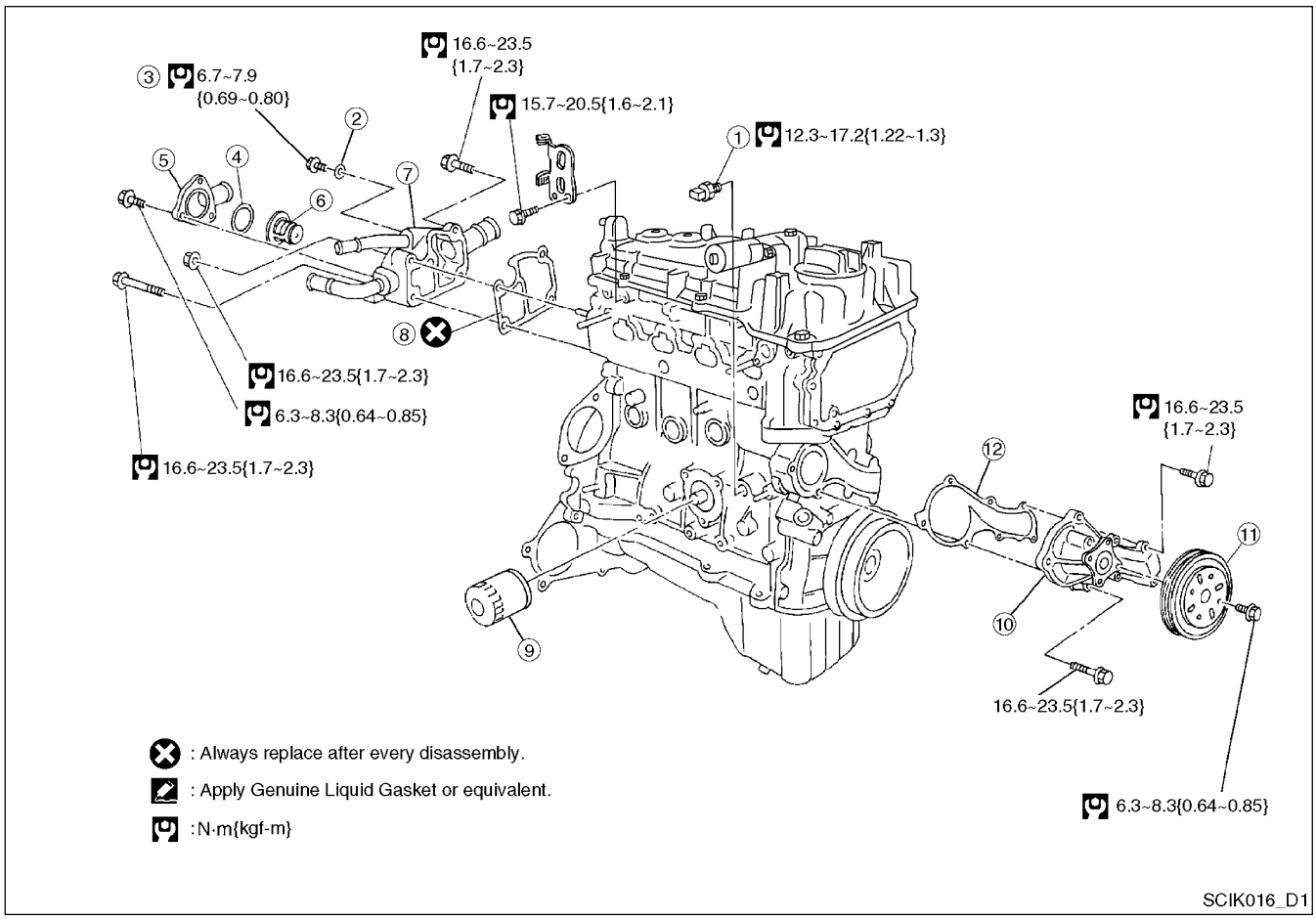

① Oil pressure switch
② Washer
③ Air relief plug
④ Gum ring
⑤ Water inlet
⑥ Thermostat
⑦ Thermostat housing
⑧ Gasket
⑨ Oil filter
⑩ Water pump
⑪ Water pump pulley
⑫ Gasket

Removal • Installation (Cont'd)

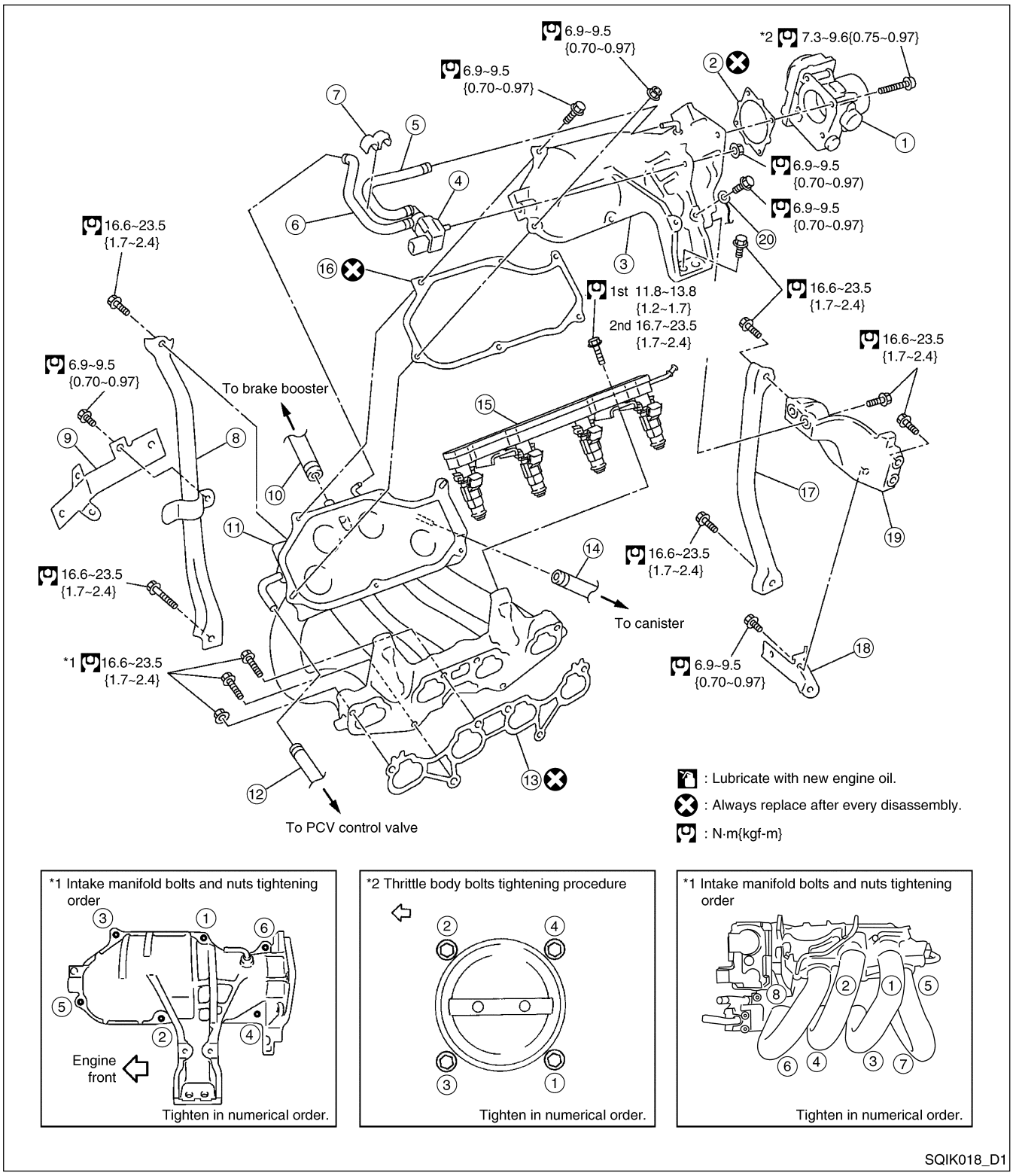

① Throttle body
② Gasket
③ Intake manifold collector
④ EVAP canister purge volume control solenoid valve
⑤ Vacuum hose
⑥ Vacuum hose
⑦ Hose clamp
⑧ Intake manifold support (front)
⑨ Harness bracket
⑩ Vacuum hose
⑪ Intake manifold
⑫ PCV hose
⑬ Gasket
⑭ Vacuum hose
⑮ Fuel tube and fuel injector assembly
⑯ Gasket
⑰ Intake manifold support (engine rear)
⑱ Harness bracket
⑲ Intake manifold support (rear)
⑳ Ground cable

Removal • Installation (Cont'd)

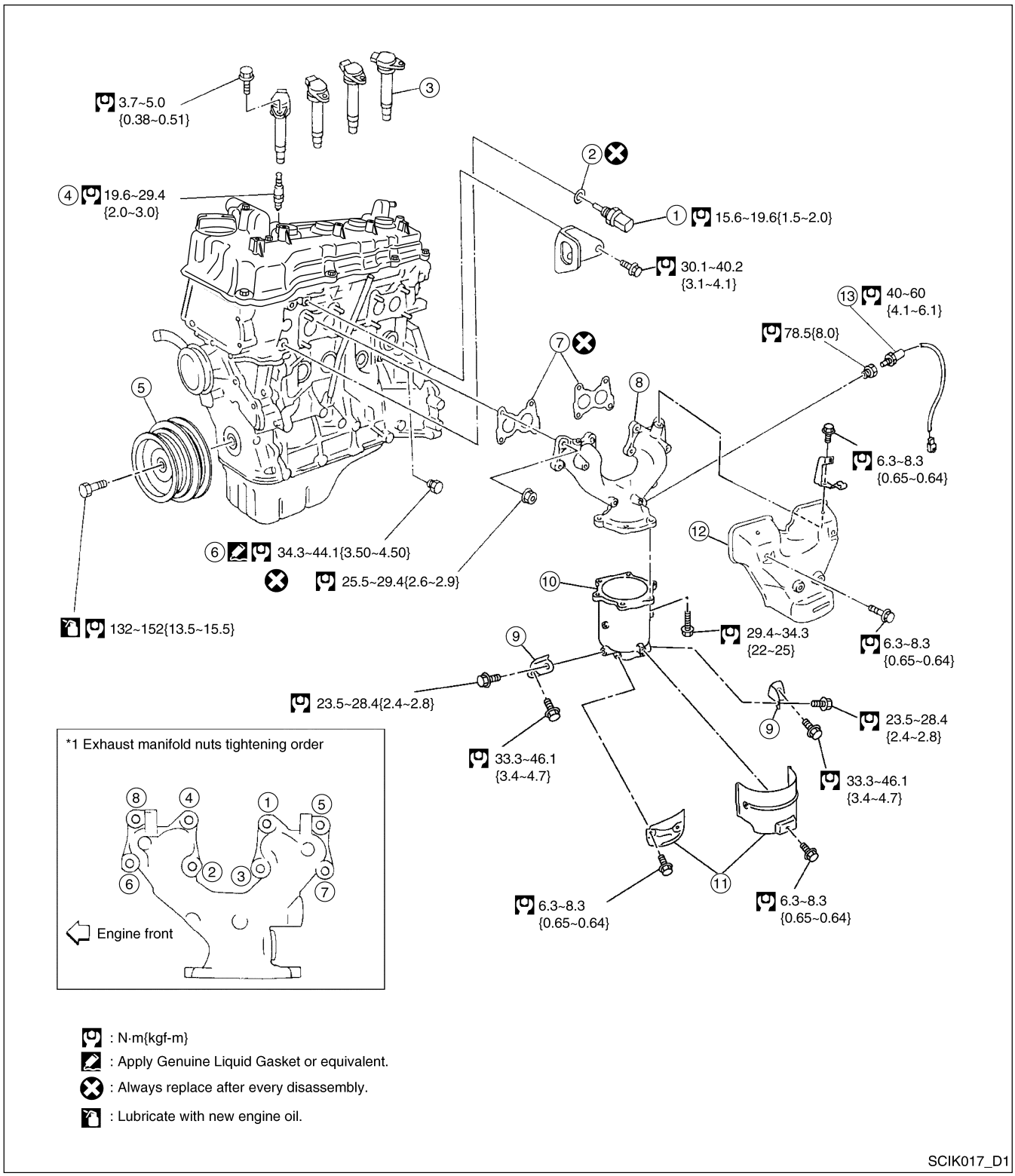

① Engine coolant temperature sensor
② Washer
③ Ignition coil
④ Spark plug
⑤ Crankshaft pulley
⑥ Water drain plug
⑦ Gasket
⑧ Exhaust manifold
⑨ Support
⑩ Three way catalyst
⑪ Three way catalyst cover
⑫ Exhaust manifold cover
⑬ Heated oxygen sensor

Measurement of Compression Pressure

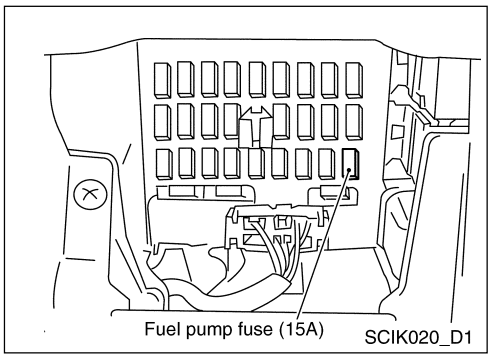

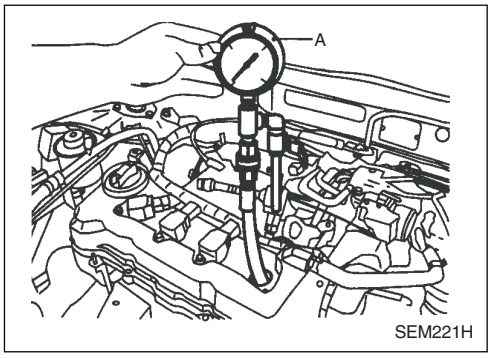

Measurement of Compression Pressure

1. Warm up engine and turn ignition switch OFF.
2. Disconnect fuel pump fuse to avoid injection during measurement.
3. Install engine rpm tester.
4. Disconnect ignition coil with power transistor harness connectors, then remove ignition coils.
5. Remove all spark plugs.
   - Clean area around plug with compressed air before removing the spark plug.
6. Attach a compression tester (A: Commercial tool) to No.1 cylinder.
7. Turn ignition switch to “START” position.
8. Crank engine and record highest gauge indications. Repeat the measurement on each cylinder as shown above.

Unit: kPa (bar, kg/cm², psi)/rpm

Standard	Minimum	Difference limit between cylinders
1,324 (13.24, 13.5, 192)/350	1,128 (11.28, 11.5, 164)/350	98 (0.98, 1.0, 14)/350

- Always use a fully-charged battery to obtain the specified engine speed.
- If pressure is below the minimum value, check the valve clearance and components around combustion chamber (valves, valve seats, piston, piston rings, cylinder bore, cylinder head, and cylinder head gasket) and retest compression.
- If compression in one or more cylinders is low, pour a small amount of engine oil into cylinders through spark plug holes and retest compression.
  a) If adding oil helps compression, piston rings may be worn or damaged. If so, replace piston rings after checking piston.
  b) If pressure stays low, a valve may be sticking or seating improperly. Inspect and repair valve and valve seat. If valve or valve seat is damaged excessively, replace them.
- If compression stays low in two cylinders that are next to each other, the cylinder head gasket may be leaking or both cylinders may have valve component damage. Inspect and repair as necessary.

9. Install removed parts in the reverse order of removal.

Checking

1. Inspect for cracks, fraying, wear or oil adhesion. If necessary, replace with a new one.

   Before inspecting the engine, make sure the engine has cooled down; wait approximately 30 minutes after the engine has been stopped.

   When replacing belt, make sure the new belt has the same number of ribs as the old one.
2. Inspect drive belt deflections by pushing on the belt midway between pulleys. Adjust if belt deflections exceed the limit.

CAUTION:

When measuring belt tension immediately after belt is installed, first set the tension to the standard. Then, rotate crankshaft for more than two turns in order to eliminate variance in belt deflection between the pulleys. Re-measure and adjust the tension to the standard.

Unit: mm (in)

		Applied engine	Used belt deflection		Deflection of new belt
			Limit	Deflection after adjustment	
With air conditioner compressor	With air conditioner compressor	QG16DE	8.1 (0.319)	5.3 - 5.7 (0.209 - 0.224)	4.5 - 5.0 (0.177 - 0.197)
Power steering oil pump			8.5 (0.335)	5.2 - 5.8 (0.205 - 0.228)	4.6 - 5.2 (0.181 - 0.205)
Applied pushing force		98.1 N (10 kg, 22 lb)			

Cleaning and Changing

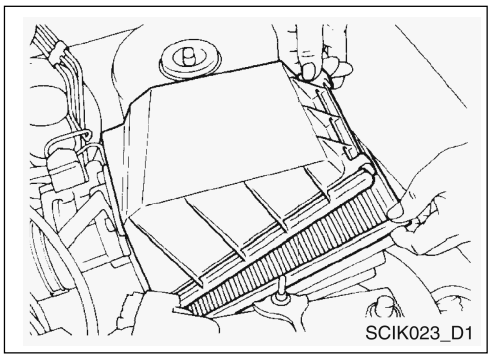

Cleaning and Changing

VISCOUS PAPER TYPE

The viscous paper type filter does not need cleaning between renewals. Refer to MA section.

Cleaning and Changing

Cleaning and Changing

1. Disconnect ignition coil harness connectors.
2. Remove ignition coils.

3. Remove spark plugs with spark plug wrench.
4. Clean plugs in sand blast cleaner.
5. Check insulator for cracks or chips, gasket for damage or deterioration and electrode for wear and burning. If they are excessively worn away, replace with new spark plugs.

   Wrench with a magnet to hold spark plug

6. Check spark plug gap.

Spark plug:

		NGK
Type	Standard	LFR5A-11
	Hot	LFR5A-11
	Cold	LFR6A-11
Plug gap mm (in)		1.0 - 1.1 (0.039 - 0.043)

Use standard type spark plug for normal condition.

The hot type spark plug is suitable when fouling may occur with the standard type spark plug such as:

a) frequent engine starts

b) low ambient temperatures

The cold type spark plug is suitable when spark knock may occur with the standard type spark plug such as:

a) extended highway driving

b) frequent high engine revolution

7. Install spark plugs.

   Spark plug:

   19.6 - 29.4 N·m (2.0 - 2.9 kg-m, 15 - 21 ft-lb)

8. Install ignition coils.
9. Connect ignition coil harness connectors.

Components

Removal

1. Remove front RH side cover.
2. Drain engine oil.
3. Remove front exhaust tube.
4. Set a suitable transmission jack under transaxle and lift engine with engine slinger.
5. Remove center member.
6. Remove engine gussets.
7. Remove rear lower plate (A/T models).
8. Remove oil pan.
   a) Loosen oil pan bolts and nuts in the numerical order shown in the figure.

Removal (Cont'd)

b) Insert seal cutter (SST: KV10111100) between cylinder block and oil pan.

Be careful not to damage aluminum mating face.

Do not insert screwdriver, or oil pan flange will be damaged.

c) Slide seal cutter by tapping on the side of the tool with a hammer.

9. Remove oil strainer.

Installation

1. Install oil strainer.

NOTE:

Gasket and O-ring are not used for sealed area with oil pump.

2. Use a scraper to remove old liquid gasket from mating surface of oil pan.

Also remove old liquid gasket from mating surface of cylinder block.

3. Temporarily tighten drain plug.

Refer to EM-18, "Components".

4. Apply a continuous bead of liquid gasket to mating surface of oil pan.

Use Genuine Liquid Gasket or equivalent.

Apply to groove on mating surface.

Allow 7 mm (0.28 in) clearance around bolt holes.

Be sure liquid gasket diameter is 3.5 to 4.5 mm (0.138 to 0.177 in).

Attaching should be done within 5 minutes after coating.

5. Install oil pan and drain plug. Refer to EM-18, "Components".

Tighten oil pan nuts and bolts in the reverse order shown in the figure.

Bolt: M6 x 12 mm (0.47 in): 1 to 10 in the figure

M6 x 14 mm (0.55 in): 11 to 12 in the figure

Nut: 13 and 14 in the figure

Install drain plug.

Installation (Cont'd)

6. Install center member.
   - Refer to EM-56, "Engine Assembly".
7. Install removed parts in the reverse order of removal.

Inspection After Installation

- Wait at least 30 minutes before refilling engine oil.
- Check engine oil level.
- Warm up engine and check the oil amount and no leakage of oil.

Components

Components

① Cylinder head front cover
② Camshaft sprocket (Intake)
③ Camshaft sprocket (Exhaust)
④ Chain tensioner
⑤ Slack guide
⑥ O-ring
⑦ Power steering oil pump adjusting bar
⑧ Crankshaft pulley
⑨ Oil seal
⑩ Front cover
⑪ Tension guide
⑫ Cylinder block dowel
⑬ Timing chain
⑭ Oil pump drive spacer
⑮ Crankshaft sprocket
⑯ O-ring
⑰ Cylinder head auxiliary bolt

Components (Cont'd)

CAUTION:

- **After removing timing chain, do not turn crankshaft and camshaft separately, or valves will strike piston heads.**
- **When installing chain tensioner, oil seals, or other sliding parts, lubricate contacting surfaces with new engine oil.**
- **Apply new engine oil to bolt threads and seat surfaces when installing camshaft sprocket and crankshaft pulley.**
- **Be careful not to damage sensor edges.**

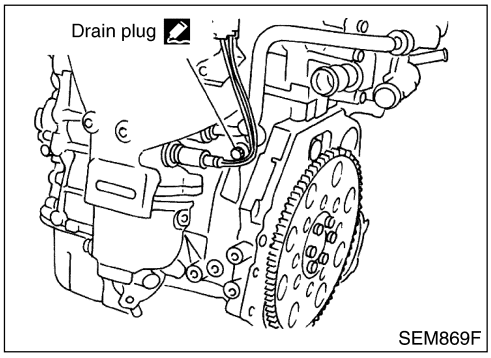

Removal

1. Disconnect battery ground cable.
2. Drain engine coolant from radiator and cylinder block.

   - Be careful not to spill engine coolant on drive belts.
3. Remove reservoir tank.
4. Drain engine oil from oil pan.
5. Remove drive belts. Refer to EM-15, "DRIVE BELTS".
6. Remove front right road wheel.
7. Remove front right splash undercover.
8. Remove power steering oil pump from adjusting bar.
9. Remove alternator.
10. Remove front exhaust tube. Refer to QG16: FE-12, "EXHAUST SYSTEM".
11. Remove ignition coils.
12. Remove spark plugs.

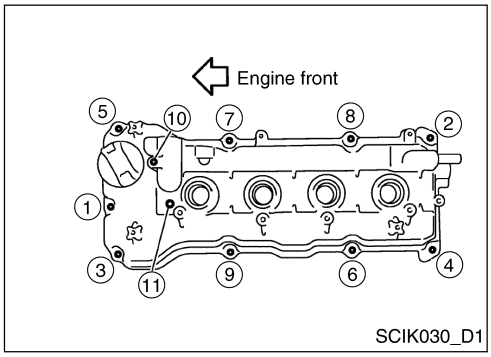

13. Remove rocker cover bolts in the numerical order as shown in the figure.

Removal (Cont'd)

14. Remove the cylinder head auxiliary bolts.

15. Set No. 1 piston at TDC on its compression stroke.
    a) Rotate crankshaft pulley clockwise and align stamped mark (yellow paint) with timing indicator.

    b) Confirm mating marks stamped on intake and exhaust sprockets are located as shown.

       If not, rotate crankshaft pulley further one turn and align them.

    c) Referring to mating marks on intake and exhaust camshaft sprockets, put paint mating marks on timing chain links.

Removal (Cont'd)

16. Remove oil pan. Refer to EM-18, "Removal".
17. Remove oil strainer.
18. For safe operation, and to reduce load to mount insulator, install removed center member again.

19. Remove starter motor, and set ring gear stopper (SST: KV101056S0) using mounting bolt holes.

20. Loosen crankshaft pulley bolt.
21. Remove crankshaft pulley using crankshaft pulley puller (commercial service tool).

CAUTION:

Hook tab onto back of crankshaft pulley only.

Do not remove crankshaft pulley bolt. Fully loosen, and then use it as support point.

22. Set intake camshaft sprocket to most advanced position. (With intake valve timing control)

CAUTION:

Removal/installation of intake camshaft sprocket is required to maintain most advanced position because of the following reasons. Therefore, follow procedure exactly.

CAUTION:

This adopts the structure where sprocket and vane (where camshaft is joined) rotate, and they get dislocated within the specified angle range.

With engine stopped, vane is in most retarded angle position. It does not rotate because it is locked in sprocket by internal lock pin.

If camshaft sprocket bolt is rotated under above condition, lateral load (shearing force) is applied to lock pin. It will damage to lock pin and cause operation malfunction.

Set intake camshaft sprocket to most advanced position as follows.

Do not remove chain tensioner before performing this step.

NOTE:

"Rotating direction" means direction viewed from engine front side.

Removal (Cont'd)

a) Using a wrench, hold hexagonal part so that intake camshaft does not move.

b) Using an air gun, apply air pressure to intake valve timing control (CVTC) solenoid valve advanced side oil passage on top surface of No. 1 camshaft bracket.

Air pressure:

300 kPa (3.00 bar, 3.06 kg/cm ^{2}, 43.5 psi) or more

Keep applying air pressure until step d is complete.

Air pressure is used to release lock pin.

CAUTION:

Be careful not to damage oil passage from interference with air gun tip.

Thoroughly wipe off oil before applying air pressure. When applying air pressure, cover area around air gun using a rag. Wear protective glasses if necessary.

c) Slowly turn intake camshaft in direction A (counterclockwise: intake manifold side).

Perform while applying air pressure.

CAUTION:

Be careful not to dislocate camshaft retaining wrench.

d) During above step, operating click (a sound indicating internal lock pin is disengaged) is heard from inside of intake camshaft sprocket. After hearing it, slowly turn intake camshaft in direction B (clockwise: exhaust manifold side), and set to most advanced position.

Perform while applying air pressure.

When vane part side (where camshaft is joined) rotates solely against sprocket, lock pin is disengaged even if operating click is not heard.

If lock pin is not disengaged, apply vibration by jiggling the camshaft with a wrench.

If lock pin is still fit-in even after the work above is performed, tap front end of camshaft on intake side using plastic hammer.

Removal (Cont'd)

e) The following status indicates that most advanced position is achieved:

Vane (where camshaft is joined) starts rotating on its own, then sprocket also starts rotating when camshaft is turned.

When above status is achieved, this step is complete.

Most advanced position is confirmed when stopper pin groove and lock pin breathing groove are aligned as illustrated.

f) Stop air, insert stopper pin [approximately 3 mm (0.12 in) dia, length of inserted part is approximately 15 mm (0.59 in)] into pin hole on camshaft sprocket to fix most advanced position.

In the figure, an Allen wrench [a/f 2.5 mm (0.098 in), short part: approximately 20 mm (0.79 in), long part: approximately 50 mm (1.97 in)] is used for stopper pin as an example.

CAUTION:

Load (spring reaction force) is not applied to stopper pin. Stopper pin is easily detached. Therefore, secure it with vinyl tape to prevent detachment.

23. Remove chain tensioner as follows.
    a) Press plate down, and release stopper tab.
    b) Insert plunger into chain tensioner body until it stops.
    c) Secure plate by passing stopper pin (such as a hard wire) through plate hole and body hole. (Plunger is also secured.)
    d) Loosen chain tensioner bolts and remove chain tensioner.

24. While holding hexagonal part of camshaft with a wrench, loosen mounting bolts and remove intake and exhaust camshaft sprockets.

CAUTION:

Be careful that tool does not interfere with other components around cylinder head.

Avoid securing camshaft at other than hexagonal part.

When handling intake camshaft sprocket, taking care of the following.

CAUTION:

Secure stopper pin with vinyl tape to prevent detachment.

Handle it carefully, and avoid any chance of impact caused by dropping.

Do not disassemble. (Do not loosen 3 bolts on front surface.)

Removal (Cont'd)

If stopper pin is detached and lock pin is engaged at most retarded position during removal, recover as follows.

a) Reinstall intake camshaft sprocket to intake camshaft, and tighten camshaft sprocket mounting bolt so that air does not leak.

CAUTION:

Tightening torque for mounting bolts must be minimum, preventing damage to internal lock pin.

b) Apply air pressure to disengage lock pin, and turn vane to most advanced position. (This step can be performed with timing chain removed.)

c) Reinstall stopper pin.

d) Remove camshaft sprocket from camshaft.

25. Remove RH engine mount. Refer to EM-56, "ENGINE ASSEMBLY".

a) Remove any parts that cause difficulties for operation around mount, or perform transfer.

b) Support cylinder block bottom surface with a transmission jack.

CAUTION:

When applying jack, use a wooden block to avoid damage to oil pan mounting surface.

While performing following operations, support engine front-side with jack.

c) Remove RH engine mounting insulator.

d) Remove RH engine mounting bracket.

26. Remove water pump pulley and idler pulley bracket assembly.

Removal (Cont'd)

27. Remove front cover with the following procedure:
    a) To increase freedom of front cover posture during removal/installation, pull oil pump drive spacer out through front oil seal.
        Pull it straight out using long-nose pliers or two flat-bladed screwdrivers.

CAUTION:

Be careful not to damage side of oil pump drive spacer and front oil seal lip.

    b) Remove power steering oil pump adjusting bar.
    c) Remove front cover carefully.
        Remove mounting bolts A - E shown in figure.

NOTE:

Bolts C and E have been removed in step b.

CAUTION:

When removing, be careful not to damage or bend front end of cylinder head gasket. Also after peeling off contact face between front cover and gasket, their surfaces shall be smooth.

If cylinder head gasket is damaged, replace it with new one.

    d) Remove O-rings from front cover and cylinder block.

28. Pull two dowel pins for front cover out of cylinder block.
    Heat them with industrial dryer sufficiently, then pull them out using locking pliers.

NOTE:

This operation is performed as preparation operation for front cover installation.

This operation can be performed after removal of timing chain.

29. Remove front oil seal from front cover.
    Insert a flat-bladed screwdriver in notch on oil seal mounting point, and lift front oil seal to remove.

NOTE:

Remove timing chain and its related parts with the following steps.

Removal (Cont'd)

30. Remove timing chain, timing chain slack guide and tension guide.
31. Remove crankshaft sproket.

Inspection after Removal

TIMING CHAIN

Check timing chain for cracks or serious wear. If a malfunction is detected, replace it.

Installation

Installation

CAUTION:

Use a scraper to completely remove all liquid gasket adhering to mounting surface. De-grease and clean with white gasoline.

After installation, wipe off any protruding liquid gasket.

1. Install timing chain and its related parts with the following procedure:

   For aligning positions for each sprocket and timing chain, and installed condition of their related parts, refer to figure.

   Install each sprocket with its mating mark facing engine front side.

a) Install timing chain and crankshaft sprocket.

   Make sure that crankshaft key is positioned straight up (No. 1 cylinder is at TDC).

   Hook timing chain on front end of camshaft so that it will not fall off.

b) Install timing chain slack guide and tension guide.

c) Install intake camshaft sprocket as follows.

   Before installation, make sure that stopper pin is inserted in intake camshaft sprocket.

   Service parts are provided with pin inserted.

CAUTION:

Stopper pin is easily detached. Secure it with vinyl tape to prevent detachment.

Installation (Cont'd)

1) Install timing chain to camshaft by aligning its mating mark (marked when timing chain is removed) with mark on camshaft sprocket.

   Align dowel pin on camshaft front surface and pin hole on sprocket backside, then install.

2) While holding hexagonal part of camshaft with a wrench, tighten intake camshaft sprocket mounting bolt.

   Make sure that stopper pin is not detached.

d) Install exhaust camshaft sprocket as follows.

1) Install timing chain to camshaft by aligning its mating mark (marked when timing chain is removed) with mark on camshaft sprocket.

   Align dowel pin on camshaft front surface with pin groove on camshaft sprocket, then install.

2) While holding hexagonal part of camshaft with a wrench, tighten exhaust camshaft sprocket bolt.

   Tightening torque is different from intake side tightening torque.

3) Make sure that mating marks on intake/exhaust camshaft sprockets and mating marks on timing chain are aligned.

Installation (Cont'd)

e) Install chain tensioner.

Hold plate and plunger with a stopper pin, then install chain tensioner.

After installation, remove stopper pin and release plunger.

Make sure again that mating marks on intake/exhaust camshaft sprockets and mating marks on timing chain are aligned.

f) Make sure again that mating marks are properly aligned.

g) Temporarily install oil pump drive spacer, crankshaft pulley, and crankshaft pulley mounting bolt so that crankshaft can be rotated.

h) Remove stopper pin from intake camshaft sprocket.

i) Slowly turn crankshaft pulley clockwise, and set intake camshaft sprocket to most retarded position.

Sprocket begins turning after crankshaft does. Once sprocket starts turning, keep turning crankshaft until the vane (cam-shaft) also begins turning. Most retarded position should now be achieved.

Most retarded position is confirmed when stopper pin groove is clockwise and offset from lock pin breathing groove.

In addition, make sure that lock pin is fit-in. When slightly rotating crankshaft counterclockwise, check that both vane and sprocket rotate.

j) Rotate crankshaft clockwise several times, and check that there is no unusual condition.

k) Remove parts temporarily installed in step g.

Installation (Cont'd)

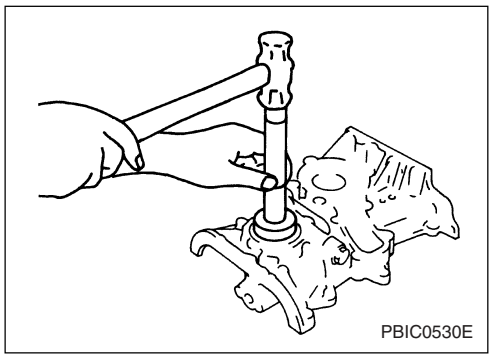

2. Install front oil seal to front cover.
   - Install it so that identification letters on oil seal will face toward front side of the engine.
   - Using an oil seal drift (SST: ST33230000), press oil seal in until it is flush with end surface of mounting position.
   - Make sure that oil seal outer circumference is free from damage and burr.

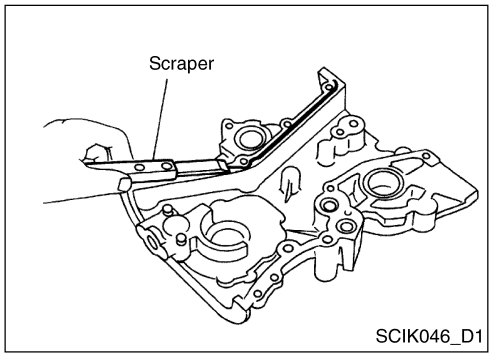

3. Install front cover with the following procedure:
   a) Before installing front cover, remove all traces of old liquid gasket from mating surface using a scraper.
      - Also remove traces of liquid gasket from mating surface of cylinder block.

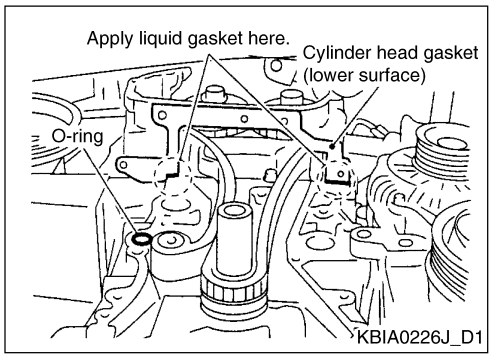

   b) Install O-ring to cylinder block.
   c) Using a flat-bladed screwdriver, apply a continuous bead of liquid gasket to contact surface between cylinder head gasket lower surface and cylinder block (2 locations shown in figure).
      Use Genuine Liquid Gasket or equivalent.

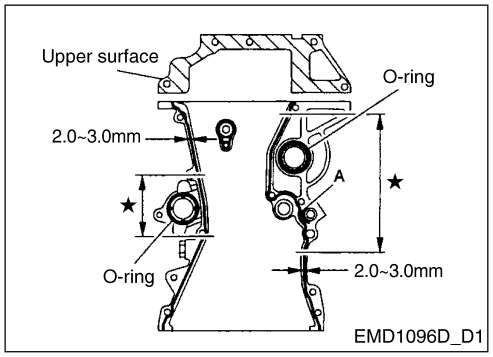

   d) Apply a continuous bead of liquid gasket to back surface of front cover (location shown in figure).

CAUTION:
- **Do not apply liquid gasket to groove A shown in figure.**
- **Especially for locations indicated by "★" mark in figure, strictly observe application range of liquid gasket.**

   e) Apply liquid gasket to top surface of front cover lightly and evenly.
   f) Install O-ring to back surface of front cover.

Installation (Cont'd)

g) With socket of oil pump inner rotor placed on crankshaft top surface (clearance between front cover top surface and cylinder head gasket lower surface is secured), move front cover close to cylinder block. (Left side in figure)

h) Lift front cover at an angle and install it to mounting position so that front cover will come in contact with both cylinder head gasket lower surface and cylinder block front surface at the same time. (Right side in figure)

CAUTION:

During work, be sure not to damage cylinder head gasket.

When installing, avoid discontinuous bead of liquid gasket caused by allowing it to adhere to an unnecessary area.

i) Install front cover with mounting bolts temporarily so that front cover will not move.

j) Press fit two dowel pins into cylinder block through front cover.

k) Tighten front cover mounting bolts temporarily.

A [M6 x 20 mm (0.79 in)], B [M6 x 40 mm (1.57 in)], C [M8 x 70 mm (2.76 in)], D [M6 x 73 mm (2.87 in)]

Bolt C also secures power steering oil pump adjusting bar.

Bolt E [M6 x 12 mm (0.47 in)] is for installing power steering oil pump adjusting bar.

l) Tighten cylinder head auxiliary bolts (M6, 4) temporarily.

m) Tighten front cover mounting bolts and cylinder head auxiliary bolts to the specified torque.

4. Install oil pump drive spacer.

When installing, align with flat of oil pump inner rotor.

If they are not aligned, rotate inner rotor with a flat-bladed screwdriver to align them.

CAUTION:

Be careful not to damage oil seal lips.

Installation (Cont'd)

5. Install water pump pulley and idler pulley bracket assembly.

6. Install RH engine mounting bracket.
7. Install RH engine mounting insulator.
8. Install oil strainer.
9. Install oil pan. Refer to EM-18, "Installation".
10. Install crankshaft pulley.

    When installing crankshaft pulley, make sure that front oil seal lip is not inverted and garter spring is in position.

    With same procedure as "removal", secure crankshaft, and tighten mounting bolt.
11. Install starter motor.

12. Install cylinder head front cover.

    Apply liquid gasket to cylinder head front cover.

    Use Genuine Liquid Gasket or equivalent.

13. Apply a continuous bead of liquid gasket to mating surface of cylinder head.

    Use Genuine Liquid Gasket or equivalent.

Installation (Cont'd)

14. Install rocker cover with rocker cover gasket and tighten bolts in reverse order as shown in the figure.

15. Reinstall parts in the reverse order of removal.

Inspection after Installation

In order to allow liquid gasket to be cured, perform inspection at least 30 minutes after the last step in which parts sealed with liquid gasket are installed.

With engine warmed up, check each part for engine oil leakage.

Replacement

Replacement

VALVE OIL SEAL

1. Remove camshaft. Refer to EM-41, “Removal”.
2. Remove adjusting shim and valve lifters.
3. To prevent valve from falling inside cylinder, turn crankshaft until cylinder with oil seal to be removed is at TDC.

CAUTION:

- **When rotating crankshaft, be careful that timing chain is not caught by front cover.**

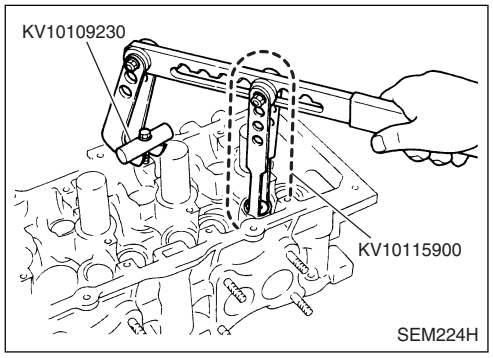

4. Using valve spring compressor (SST: KV101092S0), remove valve collet. Then remove valve spring and valve spring retainer.

CAUTION:

- **When working, take care not to damage valve lifter holes.**

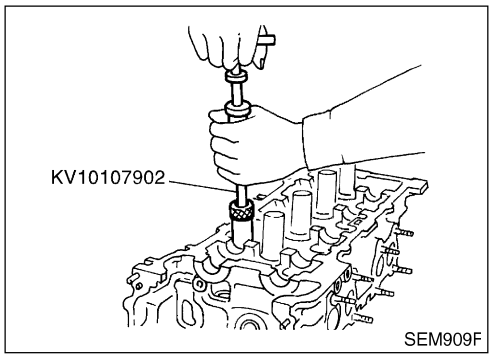

5. Remove valve oil seal using valve oil seal puller (SST: KV10107902).
6. Apply new engine oil on new valve oil seal joint and seal lip.

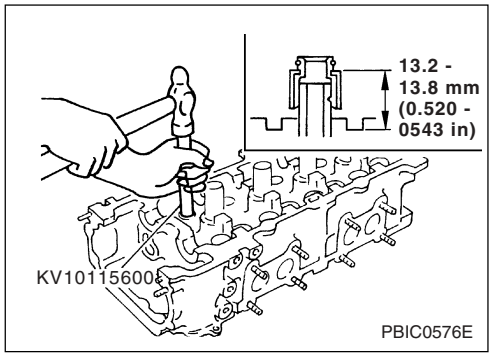

7. Using valve oil seal drift (SST: KV10115600), press fit valve oil seal to height shown in the figure.
8. Install in the reverse order of removal.

Replacement (Cont'd)

FRONT OIL SEAL

1. Remove the following parts:
   - RH undercover (with splash cover).
   - Drive belt; Refer to EM-15, "DRIVE BELTS".
   - Crankshaft pulley; Refer to EM-21, "Components".
2. Using flat-head screwdriver, remove front oil seal.

CAUTION:

- **Be careful not to damage front timing chain cover and crankshaft.**

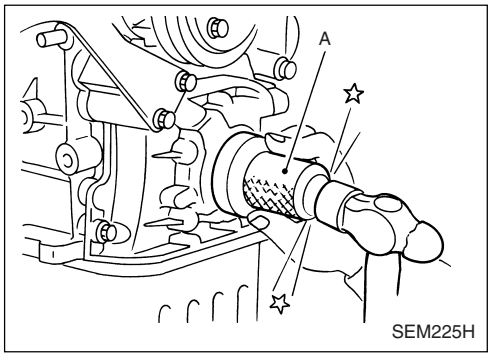

3. Apply new engine oil on new front oil seal.
4. Using front oil seal drift (A: ST33230000), press fit until the height of front oil seal is level with the mounting surface.

   Suitable drift:

   outer diameter 50 mm (1.97 in),
   inner diameter 44 mm (1.73 in).

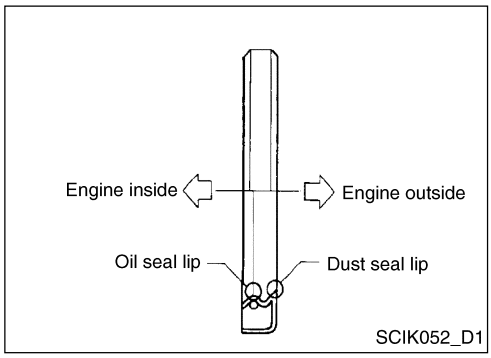

CAUTION:

- **Be careful not to damage front cover and crankshaft.**
- **Press oil seal straight so that it is not curling up or inclined.**

5. Install in the reverse order of removal.

Replacement (Cont'd)

REAR OIL SEAL

1. Remove transaxle assembly. Refer to "Transaxle Assembly" (MT: MT-8, AT: AT-128).
2. Remove flywheel (M/T) or drive plate (A/T). Refer to EM-60, "CYLINDER BLOCK".
3. Using flat-head screwdriver, remove rear oil seal.

CAUTION:

Be careful not to damage mounting surface.

4. Using rear oil seal drift (commercial tool), press new rear oil seal to rear oil seal retainer.

   Suitable drift:
   outer diameter 102 mm (4.02 in),
   inner diameter 90 mm (3.54 in).

CAUTION:

Do not touch grease applied on oil seal lip.

Be careful not to damage rear oil seal retainer and crankshaft.

Press in straight to avoid causing any burrs or tilting of oil seal.

Press rear oil seal into rear oil seal retainer so that is does not project from the end.

5. Install in the reverse order of removal.

Components

① PCV hose
② Rocker cover
③ Grommet
④ PCV control valve
⑤ PCV hose
⑥ Intake valve timing control solenoid valve
⑦ O-ring
⑧ Oil filler cap
⑨ Gasket
⑩ Rocker cover gasket
⑪ Rocker cover oil seal
⑫ Rocker cover oil seal
⑬ O-ring
⑭ Camshaft position sensor
⑮ Camshaft bracket
⑯ Intake camshaft
⑰ Exhaust camshaft
⑱ Cylinder head bolt
⑲ Adjusting shim
⑳ Valve lifter
㉑ Valve collet
㉒ Valve spring retainer
㉓ Valve spring
㉔ Valve spring seat
㉕ Valve oil seal
㉖ Valve guide
㉗ Cylinder head
㉘ Cylinder head gasket
㉙ Valve seat
㉚ Valve
㉛ Spark plug tube

Components (Cont'd)

CAUTION:

- **When installing camshaft and oil seal, lubricate contacting surfaces with new engine oil.**
- **When tightening cylinder head bolts, camshaft sprocket bolts and camshaft bracket bolts, lubricate bolt threads and seat surfaces with new engine oil.**
- **Attach tags to adjusting shims and valve lifters so as not to mix them up.**

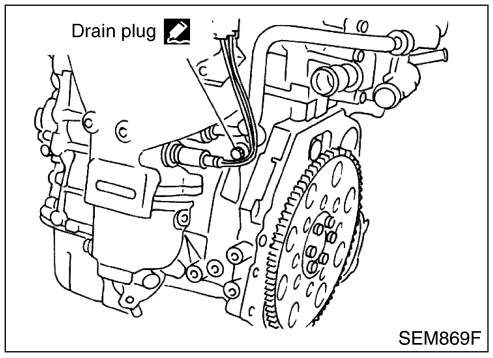

Removal

1. Release fuel pressure. Refer to QG16: EC-27, "Fuel Pressure Release".
2. Disconnect battery ground cable.
3. Drain engine coolant from radiator and cylinder block.
   - Be careful not to spill engine coolant on drive belts.
4. Remove drive belts. Refer to EM-15, "DRIVE BELTS".
5. Remove air duct to intake manifold collector.
6. Remove front undercovers.
7. Remove front exhaust tube.
   Refer to QG16: FE-12, "EXHAUST SYSTEM".
8. Disconnect vacuum hoses, fuel hoses, water hoses, wires, harness, connectors and so on.
9. Remove intake manifold and intake manifold collector assembly. Refer to EM-12, "Removal and Installation".
10. Remove exhaust manifold.
    Refer to EM-13, "Removal and Installation".
11. Remove ignition coils.
12. Remove rocker cover.
13. Remove thermostat housing. Refer to "Removal
14. Remove camshaft sprockets. Refer to EM-21, "Removal".
    - Apply paint to timing chain and camshaft sprockets for alignment during installation.

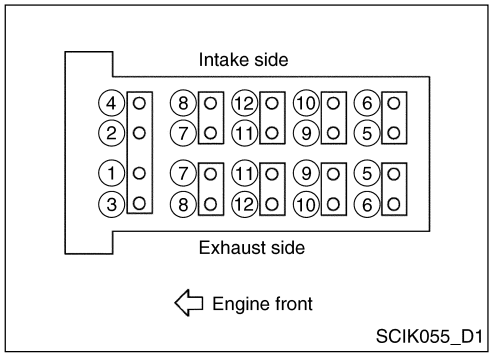

15. Remove camshaft brackets.
    - Loosen mounting bolts in several steps in the reverse order shown in the figure.
16. Remove camshafts.
    - Be careful not to damage signal plate on rear end of intake camshaft.

Components (Cont'd)

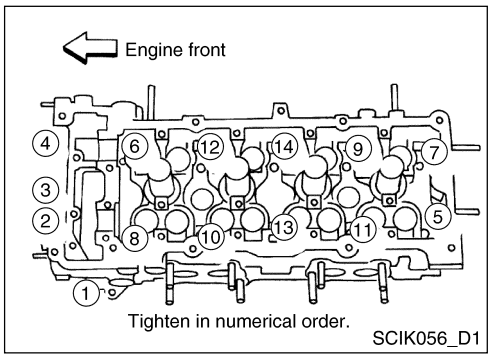

17. Loosen bolts in the numerical order shown in the figure and then remove cylinder head.
    - Cylinder head bolts should be loosened in two or three steps.
18. Remove cylinder head gasket.

Disassembly

1. Remove spark plugs with a spark plug wrench.
2. Remove adjusting shim and valve lifter.
    - Attach tags to adjusting shims and valve lifters so as not to mix them up.

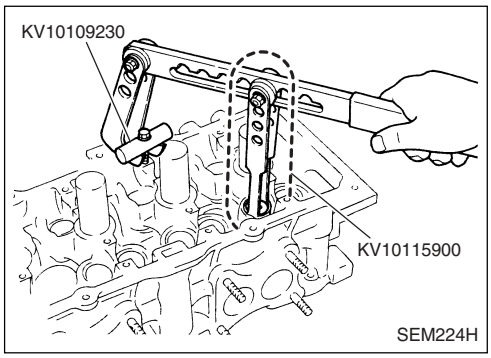

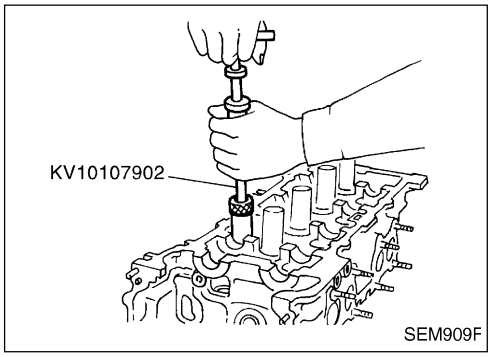

3. Remove valve collet.
    - Compress the valve spring with valve spring compressor (SST: KV101092S0). Remove valve collet with a magnetic driver.

CAUTION:

- **When working, take care not to damage valve lifter holes.**

4. Remove valve spring retainer and valve spring.
5. Push the valve stem toward the combustion chamber side and remove the valve.
    - Before removal, check valve guide clearance. Refer to EM-45, "Valve Guide Clearance".
    - Mark position on valve for assembly.
6. Remove valve oil seal.
    - Use valve oil seal puller (SST: KV10107902).
7. Remove valve spring seat.
8. When valve seat replacement is necessary, refer to EM-47, "VALVE SEAT REPLACEMENT".
9. When valve guide replacement is necessary, refer to EM-46, "VALVE GUIDE REPLACEMENT".
10. Remove spark plug tube, as necessary.
    - Using a pair of pliers, pull spark plug tube out of cylinder head.

CAUTION:

- Take care not to damage cylinder head.
- Once removed, a spark plug tube will be deformed and cannot be reused. Do not remove it unless absolutely necessary.

Inspection

Inspection

CYLINDER HEAD DISTORTION

Clean surface of cylinder head.

Use a reliable straightedge and feeler gauge to check the flat-ness of cylinder head mating surface.

Check along six positions shown in figure.

Head surface

Limit: 0.1 mm

If it exceeds the limit, replace the cylinder head.

CAMSHAFT VISUAL CHECK

Check camshaft for scratches, seizure and wear.

If anything above it found, replace camshaft.

CAMSHAFT RUNOUT

1. Measure camshaft runout at the center journal.

   Put V-blocks on a work bench and support camshaft at No. 2 and No. 5 journals.

CAUTION:

Do not support journal No. 1 (on the side of the cam-shaft sprocket) because it has a different diameter from the other four locations.

Set dial gauge vertically at No. 3 journal.

Turn camshaft by hand in one direction and measure camshaft runout on dial gauge (Total indicator reading).

Runout (Total indicator reading):

Standard: Less than 0.04 mm (0.0016 in)

2. If out of the standard, replace camshaft.

CAMSHAFT CAM HEIGHT

1. Measure the camshaft cam height.

   Standard:

   Intake: 40.217 - 40.407 mm (1.5833 - 1.5908 in)

   Exhaust: 38.965 - 39.155 mm (1.5341 - 1.5415 in)

2. If out of the standard, replace camshaft.

Inspection (Cont'd)

CAMSHAFT JOURNAL CLEARANCE

1. Install camshaft bracket and tighten bolts to the specified torque. Refer to EM-55, "Installation".
2. Measure inner diameter of camshaft bracket.

   Standard:

   No. 1 journal 28.000 - 28.021 mm (1.1024 - 1.1032 in)

   No. 2 to No. 5 journals 23.985 - 24.006 mm (0.9443 - 0.9451 in)

3. Measure outer diameter of camshaft journal.

   Standard:

   No. 1 journal 27.935 - 27.955 mm (1.0998 - 1.1006 in)

   No. 2 to No. 5 journals 23.935 - 23.955 mm (0.9423 - 0.9431 in)

4. Calculate camshaft journal clearance.

   (Clearance) = (inner diameter of camshaft bracket) - (outer diameter of camshaft journal)

   Standard:

   No. 1 journal 0.045 - 0.086 mm (0.0018 - 0.0034 in)

   No. 2 to No. 5 journals 0.030 - 0.071 mm (0.0012 - 0.0028 in)

5. If clearance is out of the standard, replace camshaft and/or cylinder head.

NOTE:

Camshaft bracket is machined along with cylinder head. Replace the cylinder head assembly when the clearance is out of the specified value.

CAMSHAFT END PLAY

1. Install camshaft in cylinder head. Refer to EM-55.
2. Measure the camshaft end play.

   Standard:

   Intake: 0.070 - 0.143 mm (0.0028 - 0.0056 in)
   Exhaust: 0.115 - 0.188 mm (0.0045 - 0.0074 in)

3. If out of the standards, replace camshaft and remeasure the end play.

   If limit is still exceeded after replacing camshaft, replace cylinder head.

Inspection (Cont'd)

CAMSHAFT SPROCKET RUNOUT

1. Install sprocket on camshaft.
2. Put V-blocks on a work bench and support camshaft at No. 2 and No. 5 journals.

CAUTION:

Do not support journal No. 1 (on the side of the camshaft sprocket) because it has a different diameter from the other four locations.

3. Measure camshaft sprocket runout.

   Runout (Total indicator reading):

   Limit: Intake: 0.20 mm (0.0079 in)

   Exhaust: 0.15 mm (0.0059 in)
4. If it exceeds the limit, replace camshaft sprocket.

VALVE GUIDE CLEARANCE

1. Measure valve stem diameter and valve guide inner diameter.
2. Calculate valve to valve guide clearance.

   (Valve to valve guide clearance) = (valve guide inner diameter) - (valve stem diameter)

   Make sure that clearance is within specification.

Unit: mm (in)

	Standard
Intake	0.020 - 0.050 (0.0008 - 0.0020)
Exhaust	0.030 - 0.060 (0.0012 - 0.0024)

If out of the standard, replace valve and remeasure the clearance.

If the standard is still exceeded after replacing valve, replace valve guide.

Inspection (Cont'd)

VALVE GUIDE REPLACEMENT

1. To remove valve guide, heat cylinder head to 110 to 130°C (230 to 266°F).

2. Drive out valve guide with a press [under a 20 kN (2 ton, 2.2 US ton, 2.0 Imp ton) pressure] or hammer and suitable tool.

CAUTION:

Cylinder head contains heat. When working, wear protective equipment to avoid getting burned.

3. Ream cylinder head valve guide hole.

   Valve guide hole diameter (for service parts):

   Intake and Exhaust: 9.685 - 9.696 mm (0.3813 - 0.3817 in)

4. Heat cylinder head to 110 to 130°C (230 to 266°F) and press service valve guide into cylinder head.

   Projection "L": 11.5 - 11.7 mm (0.453 - 0.461 in)

CAUTION:

Cylinder head contains heat. When working, wear protective equipment to avoid getting burned.

5. Ream valve guide.

   Finished size:

   Intake and Exhaust: 5.500 - 5.515 mm (0.2165 - 0.2171 in)

Inspection (Cont'd)

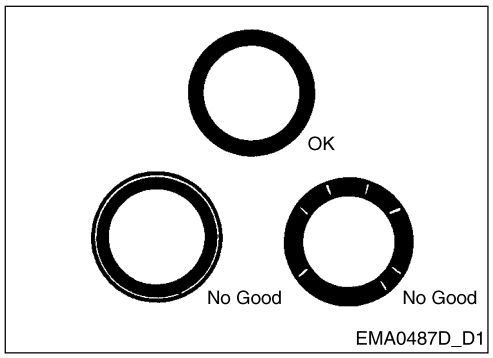

VALVE SEAT CONTACT

- After confirming that the dimensions of valve guides and valves are within specifications, perform this procedure.
- Apply prussian blue (or white lead) onto contacting surface of valve seat to check the condition of the valve contact on the surface.
- Check if the contact area band is continuous all around the circumference.
- If not, grind to adjust valve fitting and check again. If the contacting surface still has N.G conditions even after the re-check, replace valve seat.

VALVE SEAT REPLACEMENT

When valve seat is removed, replace with oversized [0.5 mm (0.020 in)] valve seat.

1. Bore out old seat until it collapses. Boring should not continue beyond the bottom face of the seat recess in cylinder head. Set the machine depth stop to ensure this.

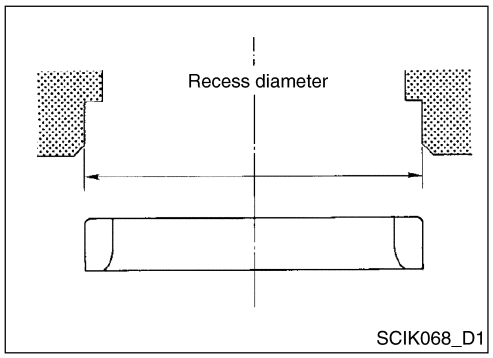

2. Ream cylinder head recess diameter for service valve seat.

   Oversize [0.5 mm (0.020 in)]:

Unit: mm

	Standard
Intake	0.020 - 0.050 (0.0008 - 0.0020)
Exhaust	0.030 - 0.060 (0.0012 - 0.0024)

- Be sure to ream in circles concentric to the valve guide center.
- This will enable valve seat to fit correctly.

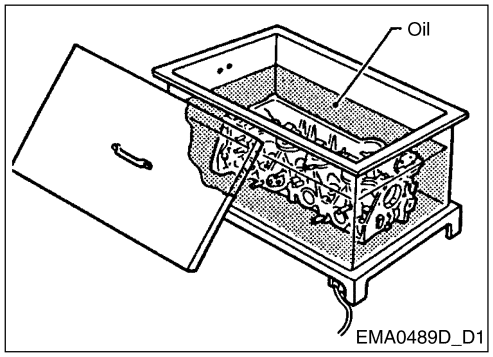

3. Heat cylinder head to 110 to 130°C (230 to 266°F) by soaking in heated oil.

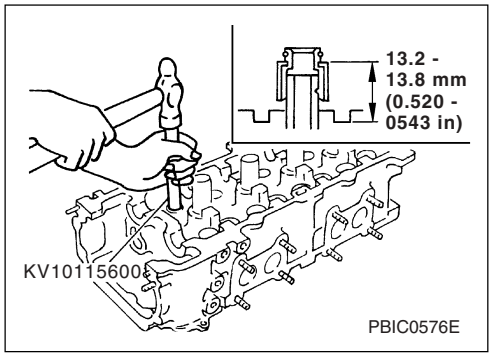

4. Provide valve seats cooled well with dry ice. Force fit valve seat into cylinder head with valve seat drift (SST: KV10115600).

CAUTION:

- **Avoid directly to touching cold valve seats.**
- **Cylinder head contains heat. When working, wear protective equipment to avoid getting burned.**

Inspection (Cont'd)

5. Using valve seat cutter set (commercial service tool) or valve seat grinder, finish the seat to the specified dimensions.

CAUTION:

When using valve seat cutter, firmly grip the cutter handle with both hands. Then, press on the contacting surface all around the circumference to cut in a single drive. Improper pressure on with the cutter or cutting many different times may result in stage valve seat.

Grind to obtain the dimensions indicated in figure.

Unit: mm (in)

	QG16DE
D1 dia.*1	27.8 - 28.0 (1.094 - 1.102)
D2 dia.*2	29.5 - 29.7 (1.161 - 1.169)
D3 dia.	31.9 - 32.1 (1.256 - 1.264)
D4 dia.*1	24.5 - 24.7 (0.965 - 0.972)
D5 dia.*2	26.2 - 26.4 (1.031 - 1.039)

*1: Diameter made by intersection point of conic angles 60° and 90°
*2: Diameter made by intersection point of conic angles 90° and 120°

6. Using compound, grind to adjust valve fitting.
7. Check again for normal contact.

VALVE DIMENSIONS

Check dimensions of each valve. Refer to SDS, EM-80 for dimensions.

When valve head has been worn down to 0.5 mm (0.020 in) in margin thickness, replace valve.

Grinding allowance for valve stem tip is 0.2 mm (0.008 in) or less.

VALVE SPRING

Squareness

Set try squre along the side of valve spring and rotate the spring.

Measure the maximum clearance between the top face of spring and try square.

Limit: 2.0 mm (0.079 in)

If it exceeds the limit, replace spring.

Inspection (Cont'd)

PRESSURE

Check with a valve spring tester.

STANDARD

Free length mm (in)	40.19 (1.5823)	45.75 (1.8012)
Length when installed mm (in)	33.82 (1.3315)	32.82 (1.2921)
Load when installed N (kg, lb)	149 - 165 (15.2 - 16.8, 33.5 - 37.0)	147 - 167 (15.0 - 17.0, 33.0 - 37.5)
Valve-opening length mm (in)	23.61 (0.9295)	24.48 (0.9638)
Valve-opening load N (kg, lb)	353 - 389.7 (36.0 - 39.8, 79.4 - 87.7)	271 - 305 (27.6 - 31.1, 60.9 - 68.6)
Identification color	None	Red or white (parallel provision)

Inspect the service specifications according to the identification color.

If either load when installed or valve-opening load is out of the standard, replace valve spring.

VALVE LIFTER AND ADJUSTING SHIM

1. Check contact and sliding surfaces for wear or scratches.

   If anything above is found, replace valve lifter or adjusting shim.

2. Check diameter of valve lifter and valve lifter guide bore.

   Valve lifter outer diameter:

   29.965 - 29.980 mm (1.1797 - 1.1803 in)

   Valve lifter hole diameter:

   30.000 - 30.021 mm (1.1811 - 1.1819 in)

3. Calculate clearance between valve lifter and valve lifter guide.

   (Clearance) = (Lifter guide inside diameter) - (Valve lifter outside diameter)

   Standard: 0.020 - 0.056 mm (0.0008 - 0.0022 in)

If it exceeds the standard, replace valve lifter or cylinder head which exceeds the standard diameter tolerance.

Valve Clearance

Valve Clearance

CHECKING

Check valve clearance while engine is warm and not running.

1. Remove rocker cover.
2. Set No. 1 cylinder at TDC on its compression stroke.

   Align timing indicator with stamped mark on crankshaft pulley.

   Make sure that valve lifters on No. 1 cylinder are loose and valve lifters on No. 4 are tight.

   If not, turn crankshaft one revolution (360 degrees) and align as described above.

3. Referring to the figure, measure valve clearance of values with “O” in table below.

		No. 1	No. 2	No. 3	No. 4
No. 1 cylinder at TDC of its compression stroke	Intake	O	O		
	Exhaust	O		O	

Using a feeler gauge, measure clearance between valve lifter and cam of camshaft.

Record any valve clearance measurements which are out of the specification. They will be used later to determine the required replacement adjusting shim.

Valve clearance for checking (Hot):

Intake: 0.304 - 0.416 mm (0.012 - 0.016 in)

Exhaust: 0.348 - 0.472 mm (0.014 - 0.019 in)

4. Turn crankshaft one revolution (360 degrees) and stamped mark on crankshaft pulley with timing indicator.
5. Referring to the figure, measure valve clearances with “O” in table below.

		No. 1	No. 2	No. 3	No. 4
No. 1 cylinder at TDC of its compression stroke	Intake			O	O
	Exhaust		O		O

6. If all valve clearances are within specification, install rocker cover.

Valve Clearance (Cont'd)

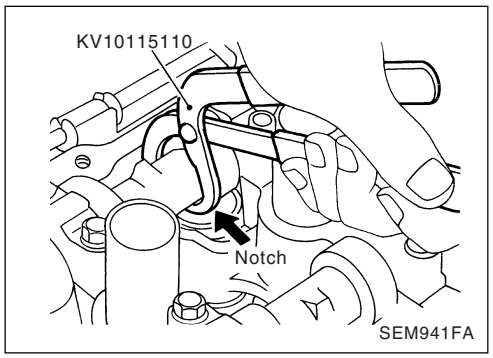

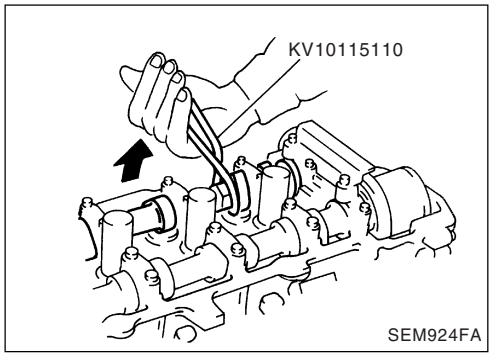

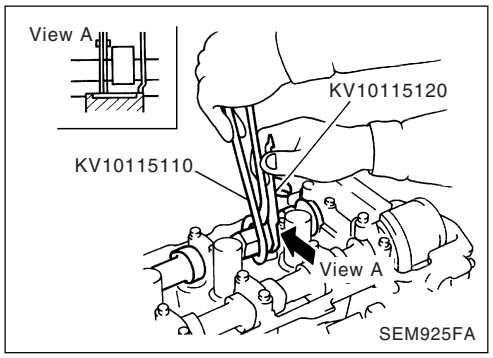

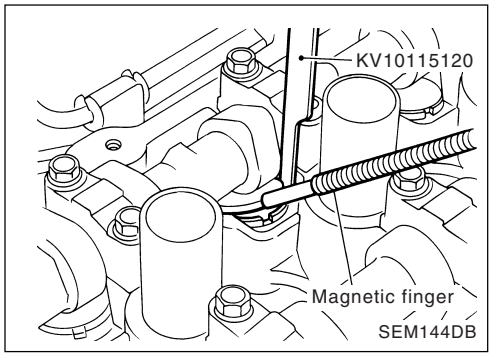

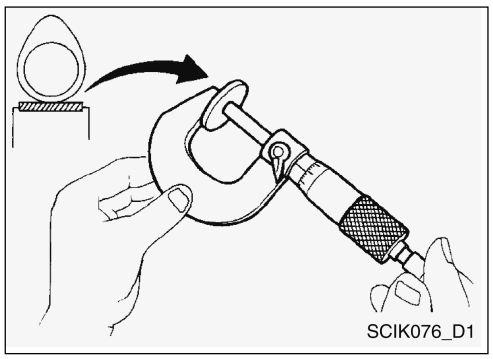

ADJUSTING

Adjust valve clearance while engine is cold.

1. Turn crankshaft. Position cam lobe upward on camshaft for valve that must be adjusted.
2. Place camshaft pliers (SST: KV10115110) around camshaft as shown in figure. Before the placing camshaft pliers, rotate notch toward center of cylinder head. (See figure.) This will simplify shim removal later.

CAUTION:

- **Be careful not to damage cam surface with the camshaft pliers.**

3. Rotate camshaft pliers (SST: KV10115110) so that valve lifter is pushed down.
4. Place lifter stopper (SST: KV10115120) between camshaft and valve lifter to retain valve lifter.

CAUTION:

- **The lifter stopper must be placed as close to camshaft bracket as possible.**
- **Be careful not to damage cam surface with lifter stopper.**

5. Remove camshaft pliers (SST: KV10115110).
6. Remove adjusting shim using a small screwdriver and a magnetic finger.
7. Determine replacement adjusting shim size using the following formula.
   - Use a micrometer to determine thickness of removed shim.
   - Calculate thickness of new adjusting shim so valve clearance comes within the specified values.

     R = Thickness of removed shim

     N = Thickness of new shim

     M = Measured valve clearance

     Intake: N = R + [M - 0.37 mm (0.0146 in)]

     Exhaust: N = R + [M - 0.40 mm (0.0157 in)]

     Shims are available in 73 sizes from 2.00 mm (0.0787 in) to 2.98 mm (0.1173 in).

Valve Clearance (Cont'd)

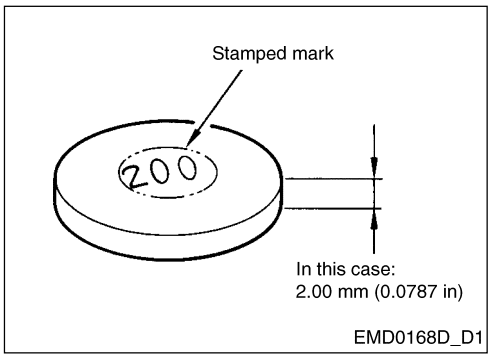

- Select the closest size shim to the calculated thickness. Refer to chart in SDS, EM-78.

  Stamped mark

  In this case: 2.00 mm (0.0787 in)

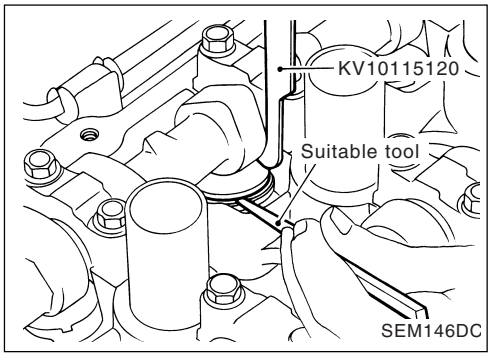

8. Install new shim using a suitable tool.
   - Install with the surface on which the thickness is stamped facing down.

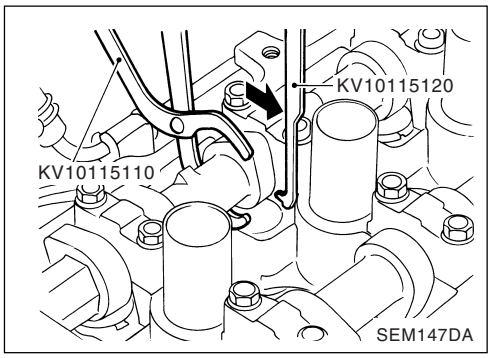

9. Place camshaft pliers as explained in steps 2 and 3.
10. Remove lifter stopper (SST: KV10115110).
11. Remove camshaft pliers (SST: KV10115120).
12. Recheck valve clearance.

VALVE CLEARANCE:

Unit: mm (in)

	Hot	Cold* (reference data)
Intake	0.304 - 0.416 (0.012 - 0.016)	0.25 - 0.33 (0.010 - 0.013)
Exhaust	0.348 - 0.472 (0.014 - 0.019)	0.32 - 0.40 (0.013 - 0.016)

*: At a temperature of approximately 20°C (68°F)

Whenever valve clearances are adjusted to cold specifications, check that the clearances satisfy hot specifications and adjust again if necessary.

Assembly

1. Install valve guide.
   Refer to EM-46, "VALVE GUIDE REPLACEMENT".
2. Install valve seat.
   Refer to EM-47, "VALVE SEAT REPLACEMENT".

Assembly (Cont'd)

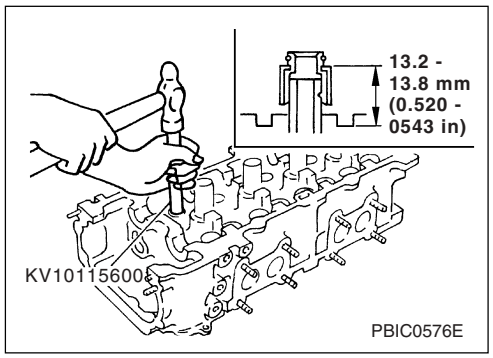

3. Install valve oil seal.
   - Install with valve oil seal drift (SST: KV10115600) to match dimension in illustration.
4. Install valve spring seat.
5. Install valve.
   - Valves of larger diameter are for intake side.
6. Install valve spring.
   - If the valve has a identification color, install with the colored surface facing down.
7. Install valve spring retainer.
8. Install valve collet.
   - Use valve spring compressor (SST: KV101092S0) to compress valve spring, then install collet with a magnetic finger.

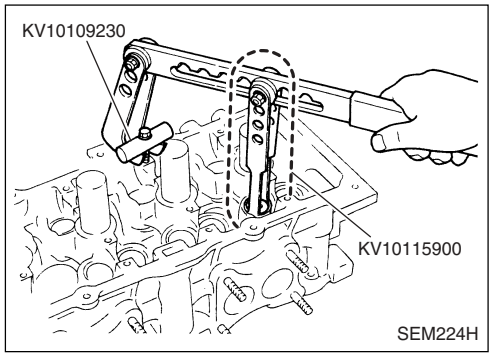

CAUTION:

- **When working, take care not to damage valve lifter holes.**
- **After installing valve component parts, tap valve stem tip with a plastic hammer to assure a proper fit.**

9. Install valve lifter and adjusting shim.
   - Install it in its original positions.
10. Install spark plug tube.
   - Press-fit into cylinder head in the following order.
   a) Remove the old liquid gasket which has become attached to the cylinder head mounting hole.
   b) Apply the liquid gasket to the area around the spark plug tube press-fit. Use Genuine Liquid Gasket or equivalent.
   c) Using a drift, press-fit spark plug tube so that its height "H" is as specified in the figure.

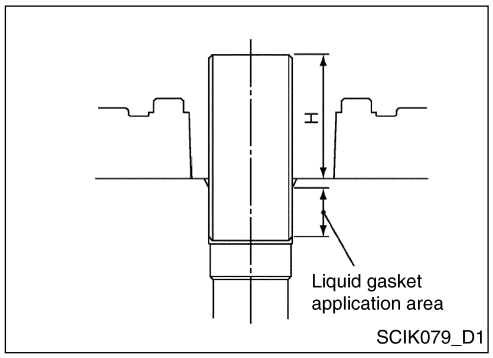

Standard press-fit height "H":

41.0 - 42.0 mm (1.614 - 1.654 in)

CAUTION:

- **Press-fit, making sure not to deform the spark plug tube.**
- **After press-fitting, wipe off liquid gasket protruding onto cylinder head upper face.**

11. Install spark plug.
   - Use a spark plug wrench.

Installation

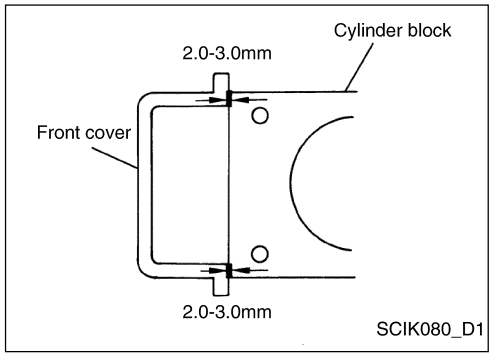

1. Apply liquid gasket to positions shown in the figure.
   Use Genuine Liquid Gasket or equivalent.
2. Install cylinder head gasket.
   - When installing cylinder head, use new cylinder head gasket.

Installation (Cont'd)

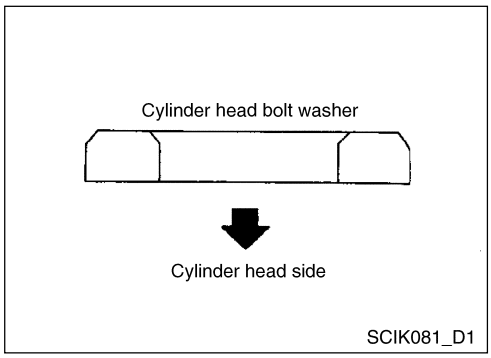

3. Install cylinder head and tighten bolts in reverse order as shown in the figure.
   - Be sure to install washers between cylinder head bolts and cylinder head.
   - Do not rotate crankshaft and camshaft separately, or valves will strike piston heads.
   - Apply new engine oil to cylinder head bolt threads and seat surfaces.

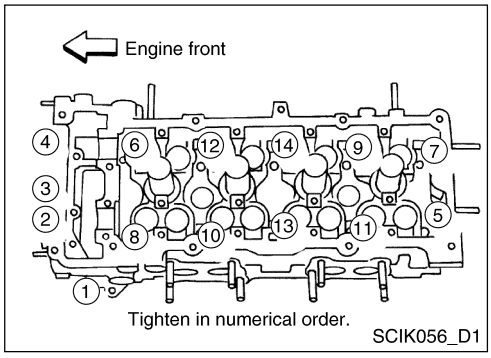

   - Tightening procedure
     a) Tighten bolts (5 - 14) to 29.4 N·m (3 kg-m, 22 ft-lb).
     b) Tighten bolts (5 - 14) to 58.8 N·m (6 kg-m, 43 ft-lb).
     c) Loosen bolts (5 - 14) completely.
     d) Tighten bolts (5 - 14) to 29.4 N·m (3 kg-m, 22 ft-lb).

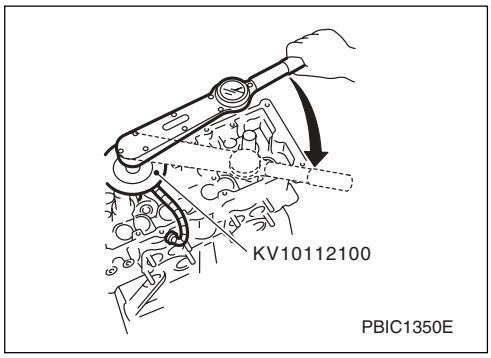

     e) Turn bolts (5 - 14) 50 to 55 degrees (target: 50 degrees) clockwise. (Angle tightening)

CAUTION:

- **Check and confirm the tightening angle by using angle wrench (SST: KV10112100). Avoid judgment by visual inspection without the tool.**

     f) Tighten bolts (1 - 5) to 6.3 to 8.3 N·m (0.64 to 0.85 kg-m, 55.8 to 73.5 in-lb).

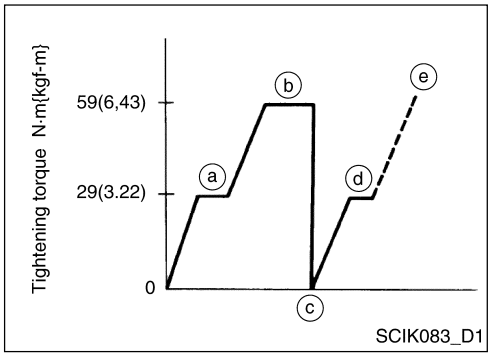

	Tightening torque N·m (kg-m, ft-lb)				
	a	b	c	d	e, f
Bolts (1 - 10)	29.4 (3, 22)	58.8 (6, 43)	0 (0, 0)	29.4 (3, 22)	50 - 55 degrees
Bolts (11 - 14)	-	-	-	-	6.3 - 8.3 (0.64 - 0.85, 55.8 - 73.5 in-lb)

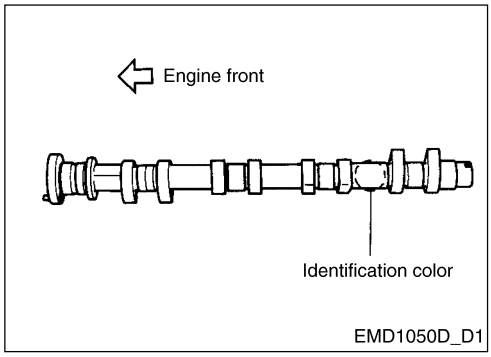

4. Install camshaft.
   - Identify intake and exhaust camshafts by identification paint colors (paint between cylinders No. 3 and No. 4).

     Intake camshaft: Yellow

     Exhaust camshaft: Yellowish green

Installation (Cont'd)

Make sure camshafts are aligned as shown in the figure.

5. Install camshaft brackets.

   Completely remove any foreign material on back surfaces of camshaft brackets and top surface of cylinder head.

   Referring to marks on top surfaces of camshaft brackets, install them to their original positions and in their original directions.

   Apply new engine oil to bolt threads and seat surface.

   Tighten camshaft bracket bolts in the following steps.

   a) Tighten bolts 9 - 12, then 1 - 8: 2.0 N·m (0.20 kg-m, 17.7 in-lb)
   b) Tighten bolts 1 - 12: 5.9 N·m (0.60 kg-m, 52.2 in-lb)
   c) Tighten bolts 1 - 12: 9.0 - 11.8 N·m (0.92 - 1.20 kg-m, 80 - 104 in-lb)

   If any part of valve assembly or camshaft is replaced, check valve clearance according to reference data.

   After completing assembly check valve clearance. Refer to EM-50, "Checking" and "Adjusting" in "VALVE CLEARANCE".

   Reference data valve clearance (Cold):

   Intake: 0.25 - 0.33 mm (0.010 - 0.013 in)

   Exhaust: 0.32 - 0.40 mm (0.013 - 0.016 in)

Removal • Installation

① Engine mounting insulator (LH)
② Engine mounting insulator (RH)
③ Engine mounting bracket (RH)
④ Engine mounting bracket (Front)
⑤ Engine mounting insulator (Front)
⑥ Center member
⑦ Engine mounting insulator (Rear)
⑧ Rubber
⑨ Engine mounting bracket (Rear)
⑩ Through-bolt
⑪ Engine mounting bracket (LH)
⑫ Dynamic damper

WARNING:

Position vehicle on a flat and solid surface.

Place chocks at front and back of rear wheels.

Do not remove engine until exhaust system has completely cooled off, otherwise, you may burn yourself and/or fire may break out in fuel line.

Before disconnecting fuel hose, release pressure. Refer to QG16: EC-26, “Fuel Pressure Check”.

Be sure to lift engine and transaxle in a safe manner.

For engines not equipped with engine slingers, attach proper slingers and bolts described in PARTS CATALOG.

CAUTION:

When lifting engine, be sure to clear surrounding parts.

Use special care near accelerator wire casing, brake lines and brake master cylinder.

When lifting the engine, always use engine slingers in a safe manner.

Removal • Installation (Cont'd)

- **When removing drive shaft, be careful not to damage grease seal of transaxle.**
- **Before separating engine and transaxle, remove crankshaft position sensor (POS) from the cylinder block assembly.**
- **Always be extra careful not to damage edge of crankshaft position sensor (POS), or signal plate teeth. Engine cannot be removed separately from transaxle. Remove engine with transaxle as an assembly.**

Removal

1. Release fuel pressure. Refer to QG16: EC-26, "Fuel Pressure Check".
2. Drain coolant from radiator and cylinder block.
3. Remove reservoir tank and bracket.
4. Disconnect both battery cables.
5. Remove battery and battery tray.
6. Disconnect fuel hose.
7. Remove air cleaner and air duct.
8. Remove drive belts. Refer to EM-15, "DRIVE BELTS".
9. Remove alternator.
10. Remove air conditioner compressor with piping connected from bracket. Temporarily secure it on body with a rope to avoid putting stress on A/C pipes.
11. Remove power steering oil pump from engine and position aside. Power steering oil pump does not need to be disconnected from power steering tubes.
12. Remove the following parts:
    - RH and LH front wheels
    - Front undercovers
    - RH and LH brake caliper assemblies.

      Brake hose does not need to be disconnected from brake caliper assembly. Never depress brake pedal.
    - RH and LH drive shaft.

      When removing drive shaft, be careful not to damage transaxle side oil seal.
    - Idler pulley and bracket assembly
    - Front exhaust tube: Refer to QG16: FE-13, "Removal and Installation".
    - Stabilizer bar
    - Cooling fan and radiator: Refer to "Radiator"
13. Disconnect wires, harness, pipes, hoses and so on.

Removal • Installation (Cont'd)

14. Disconnect control rod and support rod from transaxle. (M/T models.)
15. Disconnect control cable from transaxle. (A/T models.)

16. Remove crankshaft position sensor (POS).

CAUTION:

Avoid impacts such as a dropping.
Do not disassemble.
Keep it away from metal particles.
Do not place sensor close to magnetic materials.

17. Install engine slinger to front left of cylinder head.

Tightening torque:
30.4 - 40.2 N·m (3.1 - 4.1 kg-m, 23 - 29 ft-lb)

NOTE:

For rear side, use those provided on engine.

18. Install lifting chain hooks into engine slinger and suspend engine with hoist.
19. Lift with hoist and secure the engine in position.

Use a manual lift table caddy (commercial service tool) or equivalently rigid tool such as a jack or trestle. Securely support bottom of engine and transaxle, and simultaneously adjust hoist tension.

CAUTION:

Put a piece of wood or something similar as the supporting surface, secure a completely stable condition.

20. Remove RH engine mounting insulator.
21. Pull LH engine mounting through-bolt out.
22. Remove mounting bolts at front and rear of center member.

Removal • Installation (Cont'd)

23. Lower manual lift table caddy, and remove engine transaxle assembly from vehicle.

CAUTION:

When carrying out this work, be sure to check all parts for interference with vehicle body.

Be sure to check that all the applicable connections have been properly disconnected.

Be careful to prevent vehicle from dropping off the lift. Be aware that changes in center of gravity may cause balance incidents.

24. Separate engine and transaxle as follows:

CAUTION:

During separate, always support bottom with a wooden block. Suspend engine slinger with a hoist. Be sure to check safety of work at any time.

a) Remove center member.
b) Remove engine mounting insulators and bracket.
c) Remove stater motor.
d) Separate engine and transaxle.

Inspection

Install in the reverse order of removal.

Inspection After Installation

Before starting engine, check the levels of coolant, lubrications and working oils. If less than required quantity, fill to the specified level.

Use procedure below to check for fuel leakage.

a) Turn ignition switch ON (with engine stopped). With fuel pressure applied to fuel piping, check for fuel leakage at connection points.
b) Start engine. With engine speed increased, check again for fuel leakage at connection points.

Run engine to check for unusual noise and vibration.

Warm up engine thoroughly to make sure there is no leakage of engine coolant, lubricants, working oil, fuel and exhaust gas.

Bleed air from passages in pipes and tubes of applicable lines, such as in cooling system.

After cooling down engine, again check amounts of engine coolant, lubricants, oil, and fluid. Refill to the specified level, if necessary.

Components

① Rear oil seal
② Rear oil seal retainer
③ Crankshaft position sensor (POS)
④ O-ring
⑤ Knock sensor
⑥ Oil level gauge guide
⑦ Cylinder block
⑧ Thrust bearing
⑨ Main bearing (Upper)
⑩ Crankshaft
⑪ Key
⑫ Top ring
⑬ 2nd ring
⑭ Oil ring
⑮ Main bearing (Lower)
⑯ Piston
⑰ Snap ring
⑱ Piston pin
⑲ Connecting rod
⑳ Connecting rod bearing
㉑ Connecting rod cap
㉒ Connecting rod nut
㉓ Main bearing cap bolt
㉔ Baffle plate
㉕ Main bearing cap
㉖ Signal plate
㉗ Rear plate
㉘ Coolant drain plug
㉙ Flywheel (M/T models)
㉚ Drive plate (A/T models)
㉛ Rear plate cover

Removal • Installation

CAUTION:

- **When installing sliding parts such as bearings and pistons, apply engine oil on the sliding surfaces.**
- **Place removed parts, such as bearings and bearing caps, in their proper order and direction.**
- **When installing connecting rod nuts and main bearing cap bolts, apply new engine oil to threads and seating surfaces.**
- **Do not allow any magnetic materials to contact the signal plate teeth of flywheel or drive plate, and rear plate.**
- **Be careful not to damage sensor edges and single plate teeth.**

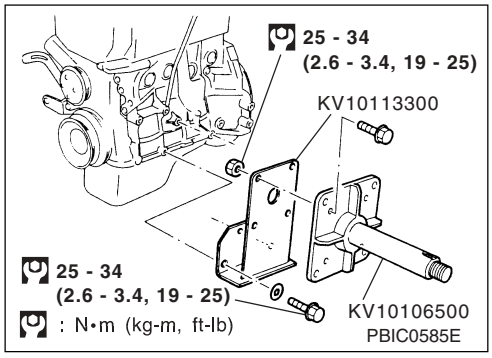

Disassembly

PISTON AND CRANKSHAFT

1. Remove engine assembly from vehicle, and separate transaxle from engine. Refer to EM-57, “ENGINE ASSEMBLY”.
2. Remove front engine mounting bracket. Refer to EM-56, “ENGINE ASSEMBLY”.

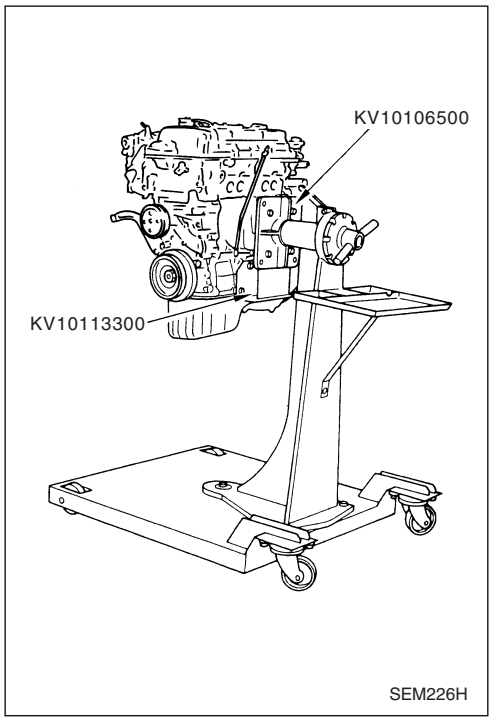

3. Remove exhaust manifold. Refer to EM-13, “OUTER COMPONENT PARTS”.
4. Place engine on a work stand.
5. Drain engine oil.
6. Remove the following components and associated parts.
   - Intake manifold and intake manifold collector assembly. Refer to EM-12, “OUTER COMPONENT PARTS”.
   - Oil pan and oil strainer. Refer to EM-18, “OIL PAN”.
   - Timing chain. Refer to EM-21, “TIMING CHAIN”.
   - Camshaft. Refer to EM-40, “CYLINDER HEAD”.
   - Cylinder head. Refer to EM-40, “CYLINDER HEAD”.
7. Remove knock sensor.

CAUTION:

- **Avoid impacts such as a dropping.**

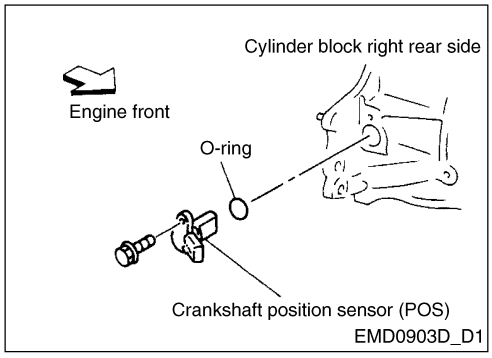

8. Remove POS sensor.

CAUTION:

- **Avoid impacts such as a dropping.**
- **Do not disassemble.**
- **Keep it away from metal particles.**
- **Do not place sensor close to magnetic materials.**

Disassembly (Cont'd)

9. Remove flywheel (M/T models) or drive plate (A/T models). Fix crankshaft with ring gear stopper (SST: KV101056S0), and remove mounting bolts.
10. Remove rear plate.
11. Remove rear oil seal retainer.

    Insert a flat-bladed screwdriver between main bearing cap and rear oil seal retainer to remove retainer.
12. Remove rear oil seal from rear oil seal retainer.

    Punch out with a flat-bladed screwdriver.

CAUTION:

Be careful not to damage rear oil seal retainer.

13. Remove piston and connecting rod assembly.

    Before removing piston and connecting rod assembly, check connecting rod side clearance. Refer to EM-86, "CRANKSHAFT".

    a) Position the crankshaft pin corresponding to connecting rod to be removed onto the bottom dead center.
    b) Remove connecting rod cap.
    c) Using a hammer handle or similar tool, push piston and connecting rod assembly out to the cylinder head side.
14. Remove connecting rod bearings.

CAUTION:

When removing them, note the installation position. Keep them in the correct order.

15. Remove piston rings from piston.

    Before removing piston rings, check the piston ring side clearance. Refer to EM-84, "PISTON RING".

    Use a piston ring expander (commercial service tool).

CAUTION:

When removing piston rings, be careful not to damage piston.

Be careful not to damage piston rings by expanding them excessively.

16. Remove piston from the connecting rod as follows:

    a) Using a snap ring pliers, remove snap ring.

    b) Heat piston to 60 to 70°C (140 to 158°F) with drier or equivalent.

Disassembly (Cont'd)

c) Push out piston pin with stick of outer diameter approximately 17 mm (0.67 in).

17. Remove main bearing cap bolts.

Loosen main bearing cap bolts in several steps in the reverse order shown in the figure, and remove them.

Measure crankshaft side clearance before loosening main bearing cap bolts. Refer to EM-86, "CRANKSHAFT".

18. Remove main bearing caps.

Using main bearing cap bolts as shown, remove center main bearing cap while shaking it back-and-forth.

To remove front and rear main bearing caps, lever them off using screwdriver or similar tool. Or, using a plastic hammer, tap them back-and-forth.

CAUTION:

Using shop cloth or wooden block, protect oil pan mounting surface on cylinder block, so that mounting surface is not damaged.

19. Remove crankshaft.

CAUTION:

When placing crankshaft on ground, be careful not to damage signal plate.

Never remove signal plate unless it is necessary.

NOTE:

If it is removed, positioning dowel pin (dowel pins for crankshaft and signal plate are specified as a single set) must be reinstalled.

Disassembly (Cont'd)

20. Remove main bearing and thrust bearing from cylinder block and main bearing cap.

CAUTION:

Check mounting positions, and store them without mixing them up.

21. Remove baffle plate.

Inspection

PISTON AND PISTON PIN CLEARANCE

1. Measure inner diameter of piston pin hole.

   Standard:

   18.987 - 18.999 mm (0.7475 - 0.7480 in)

CAUTION:

Use only the pin provided with piston.

2. Measure outer diameter of piston pin.

   Standard:

   18.989 - 19.001 mm (0.7476 - 0.7481 in)

3. Calculate piston pin clearance.

   (Piston pin clearance) = (Piston pin hole inner diameter) – (Piston pin outer diameter)

   Standard:

   -0.004 to 0 mm (-0.0002 to 0 in)

   If it exceeds the standard, replace piston assembly with pin.

Inspection (Cont'd)

PISTON RING SIDE CLEARANCE

Side clearance: Refer to SDS, EM-83.

Limit of side clearance: Refer to SDS, EM-83.

If out of specification, replace piston and/or piston ring assembly.

PISTON RING END GAP

Insert the piston ring in the cylinder after applying the engine oil on the piston and the piston ring.

End gap: Refer to SDS, EM-83.

Limit of end gap: Refer to SDS, EM-83.

If out of specification, replace piston ring. If gap exceeds maximum limit with a new ring, rebore cylinder and use oversized piston and piston rings.

Refer to SDS, EM-87.

When replacing the piston, check the cylinder bore surface for scratches or seizure. If scratches or seizure is found, hone or replace the cylinder block.

CONNECTING ROD BEND AND TORSION

Bend:

Limit 0.15 mm (0.0059 in) per 100 mm (3.94 in) length

Torsion:

Limit 0.3 mm (0.012 in) per 100 mm (3.94 in) length

If it exceeds the limit, replace connecting rod assembly.

Inspection (Cont'd)

CYLINDER BLOCK DISTORTION

Clean upper surface of cylinder block.

Use a reliable straightedge and feeler gauge to check the flatness of cylinder block surface. Check along six positions shown in figure.

Block surface flatness:

Limit: 0.10 mm (0.004 in)

If out of the distortion limit, replace cylinder block.

PISTON-TO-BORE CLEARANCE

1. Using a bore gauge, measure cylinder bore for wear, out-ofround and taper.

   Standard inner diameter:

   Refer to SDS, EM-83.

   Out-of-round (Difference between X and Y) standard:

   Less than 0.015 mm (0.0006 in)

   Taper (Difference between A and B) standard:

   Less than 0.01 mm (0.0004 in)

If it exceeds the limit, rebore all cylinders. Replace cylinder block if necessary.

2. Check for score and seizure. If seizure is found, hone it.

   If cylinder block or piston is replaced, match piston grade with grade number on cylinder block lower surface.

3. Measure piston skirt diameter.

   Piston diameter "A": Refer to SDS, EM-84.

   Measuring point "a" (Distance from the top):

   Refer to SDS, EM-84.

4. Check that piston-to-bore clearance is within the specification.

   Piston-to-bore clearance

   = cylinder bore measurement "B" - Piston diameter "A"

   Refer to SDS, EM-87.

Inspection (Cont'd)

5. Determine piston oversize according to amount of cylinder wear.
   Oversize pistons are available for service. Refer to SDS, EM-87.
6. Cylinder bore size is determined by adding piston-to-bore clearance to piston diameter "A".
   Rebored size calculation:
   D = A + B - C
   where,
   D: Bored diameter
   A: Piston diameter as measured
   B: Piston-to-bore clearance
   C: Honing allowance 0.02 mm (0.0008 in)
7. Install main bearing caps and tighten bolts to the specified torque. Refer to EM-71, "CRANKSHAFT". This will prevent distortion of cylinder bores.
8. Cut cylinder bores.
   When any cylinder needs boring, all other cylinders must also be bored.
   Do not cut too much out of cylinder bore at a time. Cut only 0.05 mm (0.0020 in) or so at a time.
9. Hone cylinders to obtain the specified piston-to-bore clearance.
10. Measure finished cylinder bore for out-of-round and taper.
    Measurement should be done after cylinder bore cools down.

CRANKSHAFT

1. Check crankshaft main and pin journals for score, wear or cracks.
2. With a micrometer, measure journals for taper and out-ofround.
   Limit:
   Out-of-round (Difference between X and Y):
   Less than 0.005 mm (0.0002 in)
   Taper (Difference between A and B):
   Less than 0.005 mm (0.0002 in)
   If the measurd value exceeds the limit, repair or replace crankshaft.

Inspection (Cont'd)

3. Measure crankshaft runout.

   Place a V-block on a precise flat table to support the journals on the both end of crankshaft.

   Place a dial gauge straight up on the No. 3 journal.

   While rotating crankshaft, read the movement of the pointer on the dial gauge.

   (Total indicator reading)

   Limit: Less than 0.10 mm (0.0020 in)

   If it exceeds the limit, replace crankshaft.

BEARING CLEARANCE

Use Method A or Method B. Method A is preferred because it is more accurate.

METHOD A (USING BORE GAUGE AND MICROMETER)

MAIN BEARING

1. Set main bearings in their proper positions on cylinder block and main bearing cap

2. Install main bearing cap to cylinder block.

   Tighten all bolts in correct order in two or three stages. Refer to EM-71 "CRANKSHAFT".

3. Measure inner diameter "A" of each main bearing.

4. Measure outer diameter "Dm" of each main journal in crankshaft.

5. Calculate main bearing clearance.

   Main bearing clearance = A - Dm

   Standard: 0.018 - 0.042 mm (0.0007 - 0.0017 in)

   Limit: 0.1 mm (0.004 in)

If it exceeds the limit, replace main bearing.

If clearance cannot be adjusted within standard of any bearing, grind crankshaft journal and use undersized bearing.

Inspection (Cont'd)

6. If the crankshaft is replaced, select thickness of main bearings as follows:
   a) Grade number of each cylinder block main journal is punched on the respective cylinder block. These numbers are punched in either Arabic or Roman numerals.
   b) Grade number of each crankshaft main journal is punched on the respective crankshaft. These numbers are punched in either Arabic or Roman numerals.
   c) Select main bearing with suitable thickness according to the following table.

MAIN BEARING GRADE COLOR:

Crankshaft main journal grade number	Cylinder block main journal grade number		
	0	1	2
0	Black	Brown	Green
1	Brown	Green	Yellow
2	Green	Yellow	Blue

Journal diameter grade (No. 1 to 5 from left in order)

For example:
Cylinder block main journal grade number : 1
Crankshaft main journal grade number : 2
Main bearing grade number : Yellow

CONNECTING ROD BEARING

1. Install connecting rod bearing to connecting rod and cap.
2. Install connecting rod cap to connecting rod.
   Tighten bolts to the specified torque. Refer to EM-71, "CRANKSHAFT".
3. Measure connecting rod bearing inner diameter using an inside micrometer.
4. Measure outer diameter of crankshaft pin.
5. Calculate connecting rod bearing oil clearance.
   (Connecting rod bearing oil clearance) = (Connecting rod bearing inner diameter) - (Crankshaft pin outer diameter)
   Standard: 0.014 - 0.039 mm (0.0006 - 0.0015 in)
   Limit: 0.1 mm (0.004 in)

If it exceeds the limit, replace connecting rod bearing.

Inspection (Cont'd)

If a new bearing, crankshaft or connecting rod is replaced, select connecting rod bearing according to the following table.

CONNECTING ROD BEARING GRADE NUMBER:

These numbers are punched in either Arabic or Roman numerals.

Crankshaft pin journal grade number	Connecting rod bearing grade color
0	-
1	Brown
2	Green

METHOD B (USING PLASTIGAGE)

CAUTION:

Do not turn crankshaft or connecting rod while Plastigage is being inserted.
If incorrect bearing clearance exists, use a thicker or undersized main bearing to ensure specified clearanc

CONNECTING ROD BUSHING CLEARANCE (SMALL END)

1. Measure connecting rod bushing inner diameter using an inside micrometer.
2. Measure outer diameter of piston pin.
3. Calculate connecting rod bushing clearance.

   (Connecting rod bushing clearance) = (Connecting rod bushing inner diameter) - (Piston pin outer diameter)

   Standard:

   0.005 - 0.017 mm (0.0002 - 0.0007 in)

   If out of the standard, replace connecting rod assembly

FLYWHEEL/DRIVE PLATE RUNOUT

Limit (Total indicator reading):

Flywheel (M/T models): 0.15 mm (0.0059 in)

Drive plate (A/T models)*: 0.2 mm (0.008 in)

Measuring points: Approximately 115 mm (4.53 in) from crankshaft center

CAUTION:

Do not allow any magnetic materials to contact the ring gear teeth and rear plate.

Do not resurface flywheel. Replace as necessary.

Assembly

PISTON

1. Install new snap ring on rear side of piston pin hole.

2. Heat piston to 60 to 70°C (140 to 158°F) and assemble piston, piston pin, connecting rod and new snap ring.

   Align the direction of piston and connecting rod.

   Numbers stamped on connecting rod and cap correspond to each cylinder.

   After assembly, make sure connecting rod swings smoothly.

3. Install piston rings with piston ring expander (commercial service tool).

CAUTION:

Be careful not to damage piston.

When piston rings are not replaced, make sure that piston rings are mounted in their original position.

Install new piston rings either side up if there is no punch mark.

Position end gaps of each piston ring to piston front mark as shown in the figure, then install rings.

Install second ring with stamp mark side facing upward.

CRANKSHAFT

1. Install main bearings and thrust bearings.
   a) Remove dust, dirt, and oil on the bearing mating surfaces of cylinder block.
   b) Install thrust bearings to the both sides of the No. 3 journal housing on cylinder block.

      Install thrust bearings with the oil groove facing the crankshaft arm (outside).

Assembly (Cont'd)

c) Install main bearings paying attention to the direction.

Main bearing with an oil hole and groove goes on cylinder block. The one without them goes on main bearing caps.

Main bearings (cylinder block side) for journal No. 1 and for No. 2 to No. 5 are different.

Before installing bearings, apply engine oil to the bearing surface (inside). Do not apply oil to the back surface, but thoroughly clean it.

When installing, align the bearing stopper to the notch.

Ensure the oil holes on cylinder block and those on the corresponding bearing are aligned.

2. Install signal plate to crankshaft.
   a) Position crankshaft and signal plate using positioning dowel pin, and tighten mounting bolts.
   b) Remove dowel pin.

CAUTION:

Be sure to remove dowel pin.

NOTE:

Dowel pin of crankshaft and signal plate are provided as a set for each.

If dowel pin is not available (when crankshaft and signal plate are reused), use M6 bolt [length under head: 10 mm (0.39 in) or longer] as its substitute.

3. Install crankshaft to cylinder block.

While turning crankshaft by hand, check that it turns smoothly.

4. Install main bearing cap.

Main bearing cap is identified by identification paint No. made on it before it is removed.

Install it with arrow facing to front.

CAUTION:

Main bearing cap cannot be replaced as a single part, because it is machined together with cylinder block.

5. Tighten main bearing bolts in several steps in numerical order shown in the figure.

Apply new engine oil onto thread and seat of mounting bolt.

After tightening bolts to the specified torque, make sure that crankshaft rotates smoothly.

Assembly (Cont'd)

6. Measure crankshaft end play.

   Crankshaft end play:

   Standard: 0.060 - 0.220 mm (0.0024 - 0.0087 in)

   Limit: 0.3 mm (0.012 in)

   If it exceeds the limit, replace thrust bearing with new ones, and measure again.

   If it still exceeds the limit, replace the crankshaft also.

7. Install connecting rod bearings to the connecting rod and connecting rod cap.

   When installing connecting rod bearings, apply new engine oil to the bearing surface (inside). Do not apply oil to the back surface, but thoroughly clean it.

   When installing, align the connecting rod bearing stopper protrusion with the groove of connecting rod and connecting rod cap to install.

   Check the oil holes on connecting rod and those on the corresponding bearing are aligned.

8. Install the piston and connecting rod assembly to crankshaft.

   Position the crankshaft pin corresponding to connecting rod to be installed onto the bottom dead center.

   Apply engine oil sufficiently to the cylinder bore, piston and crankshaft pin.

   Match the cylinder position with the cylinder No. on connecting rod to install.

   Using a piston ring compressor, install piston with the front mark on the piston crown facing the front of the engine.

CAUTION:

Be careful not to damage the crankshaft pin, resulting from an interference of the connecting rod big end.

9. Install connecting rod caps.

   Apply new engine oil to bolt threads and nut seating surfaces.

   Tighten connecting rod cap nuts in the following procedure:

   Tighten to 13.7 to 15.7 N·m (1.4 to 1.6 kg-m, 10.1 to 11.5 ft-lb).

   Turn nuts to 35 to 40 degrees (Target: 35 degrees) clockwise with angle wrench (SST: KV10112100).

CAUTION:

Use only the angle wrench (SST: KV10112100) when tightening the nuts in angle. Never determine the tightening value with only eyes.

Assembly (Cont'd)

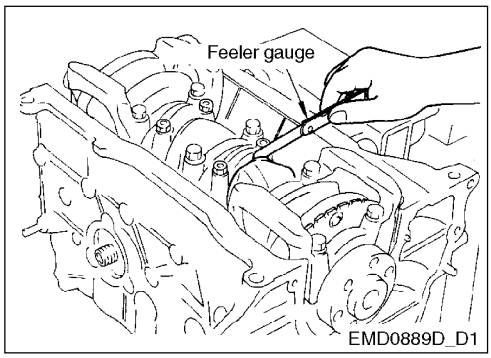

10. Measure connecting rod side clearance.

    Connecting rod side clearance:

    Standard: 0.200 - 0.470 mm (0.0079 - 0.0185 in)

    Limit: 0.5 mm (0.020 in)

    If beyond the limit, replace connecting rod and/or crankshaft.

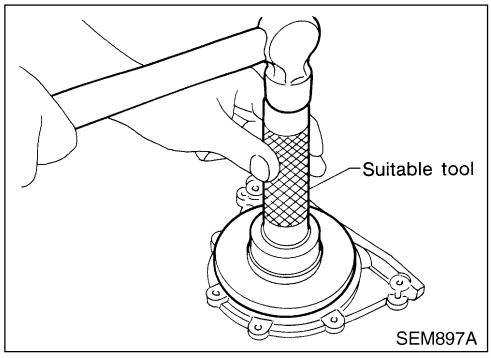

11. Install rear oil seal.
    - Use an oil seal drift (Commercial tool) to press it in. At this time, be careful not to cause any scratches or burrs on circumference of oil seal.

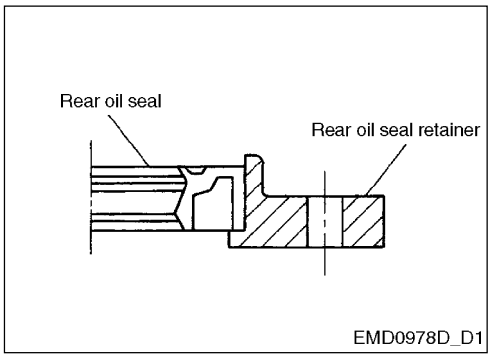

- Press oil seal into rear oil seal retainer until it does not project from end.

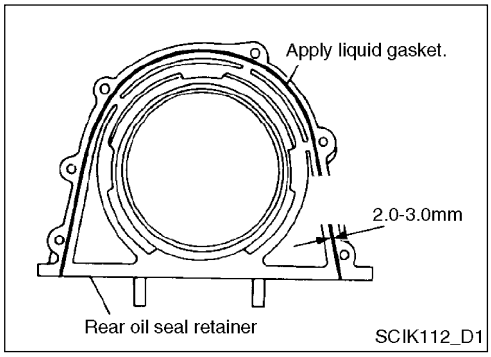

12. Install rear oil seal retainer.
    - Apply continuous bead of liquid gasket to parts shown in figure.

      Use Genuine Liquid Gasket or equivalent.
    - Install rear oil seal retainer by aligning it with dowel pins on cylinder block.

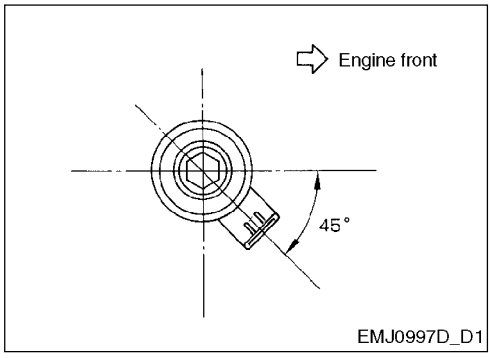

KNOCK SENSOR

- Install knock sensor with connector facing lower right by 45 degrees as shown in the figure.

CAUTION:

- **If any impact by dropping is applied to knock sensor, replace it with new one.**
- **Make sure that there is no foreign material on the cylinder block mating surface and the back surface of knock sensor.**
- **Do not tighten the mounting bolts while holding the connector.**
- **Make sure that knock sensor does not interfere with other parts.**

General Specifications

General Specifications

Engine		QG16DE
Classification		Gasoline
Cylinder arrangement		4, in-line
Displacement cm^3 (cu in)		1,596 (97.39)
Bore x stroke mm (in)		76.0 x 88.0 (2.992 x 3.465)
Valve arrangement		DOHC
Firing order		1-3-4-2
Number of piston rings	Compression	2
	Oil	1
Number of main bearings		5
Compression ratio		9.5

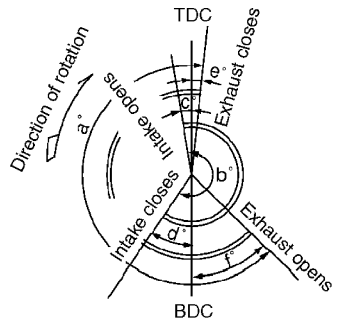

SCIK113_D1

		a	b	c	d	e	f
Valve timing	QG16DE	204°	228°	-8° to 32°	56° to 16°	-2°	26°

COMPRESSION PRESSURE

Unit: kPa (bar, kg/cm^2, psi)/350 rpm

Standard	1,324 (13.24, 13.5, 192)
Minimum	1,128 (11.28, 11.5, 164)
Difference limit between cylinders	98 (0.98, 1.0, 14)

Belt Deflection, Spark Plug, Cylinder Head

BELT DEFLECTION

Unit: mm (in)

		Applied engine	Used belt deflection		Deflection of new belt
			Limit	Deflection after adjustment	
Alternator	With air conditioner compressor	QG16DE	8.1 (0.319)	5.3 - 5.7 (0.209 - 0.224)	4.5 - 5.0 (0.177 - 0.197)
Power steering oil pump			8.5 (0.335)	5.2 - 5.8 (0.205 - 0.228)	4.6 - 5.2 (0.181 - 0.205)
Applied pushing force		98.1 N (10 kg, 22 lb)			

SPARK PLUG

		NGK
Type	Standard	LFR5A-11
	Hot	LFR4A-11
	Cold	LFR6A-11
Plug gap mm (in)		1.0 - 1.1 (0.039 - 0.043)

CYLINDER HEAD

Unit: mm (in)

	Standard	Limit
Head surface flatness	Less than 0.03 (0.0012)	0.1 (0.004)
Height	117.8 - 118.0 (4.638 - 4.646)	-

Valve

VALVE

Unit: mm (in)

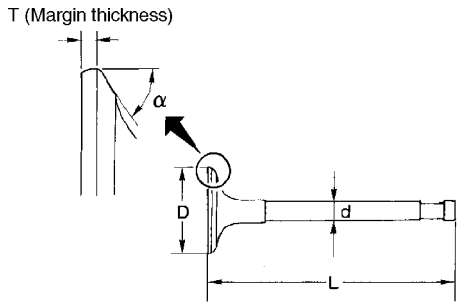

		QG16DE
Valve head diameter “D”	Intake	29.9 - 30.2 (1.177 - 1.189)
	Exhaust	24.9 - 25.2 (0.980 - 0.992)
Valve length “L”	Intake	92.25 (3.6319)
	Exhaust	92.62 (3.6464)
Valve stem diameter “d”	Intake	5.465 - 5.480 (0.2152 - 0.2157)
	Exhaust	5.455 - 5.470 (0.2148 - 0.2154)
Valve face angle “á”		45°1' - 45°45'
Valve margin “T”		1 (0.04)
Valve margin “T” limit		More than 0.5 (0.020 in)
Valve stem end surface grinding limit		0.2 (0.008)

VALVE SPRING

Identification color		None	Red or White
Free height mm (in)		40.19 (1.5823)	45.75 (1.8012)
Pressure N (kg, lb) at height mm (in)	Installed	149 - 165 (15.2 - 16.8, 33.5 - 37.0) at 32.82 (1.2921)	147 - 167 (15.0 - 17.0, 33.0 - 37.5) at 32.82 (1.2921)
	Valve-opening	353 - 387 (36.0 - 39.5, 79.4 - 87.1) at 24.61 (0.9689)	271 - 305 (27.6 - 31.0, 60.9 - 68.6) at 24.48 (0.9638)
Out-of-square mm (in)		2.0 (0.0709)	2.0 (0.0709)

VALVE LIFTER

Unit: mm (in)

Valve lifter outer diameter	29.965 - 29.980 (1.1797 - 1.1803)
Valve lifter hole diameter	30.000 - 30.021 (1.1811 - 1.1819)
Clearance between valve lifter and valve lifter hole	0.020 - 0.056 (0.0008 - 0.0020)

Valve (Cont'd)

VALVE CLEARANCE

Unit: mm (in)

	Hot	Cold* (reference data)
Intake	0.304 - 0.416 (0.012 - 0.016)	0.25 - 0.33 (0.010 - 0.013)
Exhaust	0.348 - 0.472 (0.014 - 0.019)	0.32 - 0.40 (0.013 - 0.016)

*: At a temperature of approximately 20°C (68°F)

Whenever valve clearances are adjusted to cold specifications, check that the clearances satisfy hot specifications and adjust again if necessary.

VALVE GUIDE

Unit: mm (in)

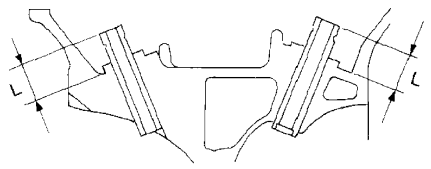

SCIK115_D1

		Intake		Exhaust	
		Standard	Service	Standard	Service
Valve guide	Outer diameter	9.523 - 9.534 (0.3749 - 0.3754)	9.723 - 9.734 (0.3828 - 0.3832)	9.523 - 9.534 (0.3749 - 0.3754)	9.723 - 9.734 (0.3828 - 0.3832)
	Inner diameter [Finished size]	5.500 - 5.515 (0.2165 - 0.2171)		5.500 - 5.515 (0.2165 - 0.2171)	
Cylinder head valve guide hole diameter		9.475 - 9.496 (0.3730 - 0.3739)	9.685 - 9.696 (0.3813 - 0.3817)	9.475 - 9.496 (0.3730 - 0.3739)	9.685 - 9.696 (0.3813 - 0.3817)
Interference fit of valve guide		0.027 - 0.059 (0.0011 - 0.0023)	0.027 - 0.049 (0.0011 - 0.0019)	0.027 - 0.059 (0.0011 - 0.0023)	0.027 - 0.049 (0.0011 - 0.0019)
Stem to guide clearance		0.020 - 0.050 (0.0008 - 0.0020)		0.030 - 0.060 (0.0012 - 0.0024)	
Projection length "L"		11.5 - 11.7 (0.453 - 0.461)			

AVAILABLE SHIMS

Thickness mm (in)	Identification mark
2.00 (0.0787)	200
2.02 (0.0795)	202
2.04 (0.0803)	204
2.06 (0.0811)	206
2.08 (0.0819)	208
2.10 (0.0827)	210
2.12 (0.0835)	212
2.14 (0.0843)	214
2.16 (0.0850)	216
2.18 (0.0858)	218
2.20 (0.0866)	220

Valve (Cont'd)

Thickness mm (in)	Identification mark
2.21 (0.0870)	221
2.22 (0.0874)	222
2.23 (0.0878)	223
2.24 (0.0882)	224
2.25 (0.0886)	225
2.26 (0.0890)	226
2.27 (0.0894)	227
2.28 (0.0898)	228
2.29 (0.0902)	229
2.30 (0.0906)	230
2.31 (0.0909)	231
2.32 (0.0913)	232
2.33 (0.0917)	233
2.34 (0.0921)	234
2.35 (0.0925)	235
2.36 (0.0929)	236
2.37 (0.0933)	237
2.38 (0.0937)	238
2.39 (0.0941)	239
2.40 (0.0945)	240
2.41 (0.0949)	241
2.42 (0.0953)	242
2.43 (0.0957)	243
2.44 (0.0961)	244
2.45 (0.0965)	245
2.46 (0.0969)	246
2.47 (0.0972)	247
2.48 (0.0976)	248
2.49 (0.0980)	249
2.50 (0.0984)	250
2.51 (0.0988)	251
2.52 (0.0992)	252
2.53 (0.0996)	253
2.54 (0.1000)	254
2.55 (0.1004)	255
2.56 (0.1008)	256
2.57 (0.1012)	257
2.58 (0.1016)	258
2.59 (0.1020)	259
2.60 (0.1024)	260

Valve (Cont'd)

Thickness mm (in)	Identification mark
2.61 (0.1028)	261
2.62 (0.1031)	262
2.63 (0.1035)	263
2.64 (0.1039)	264
2.65 (0.1043)	265
2.66 (0.1047)	266
2.68 (0.1055)	268
2.70 (0.1063)	270
2.72 (0.1071)	272
2.74 (0.1079)	274
2.76 (0.1087)	276
2.78 (0.1094)	278
2.80 (0.1102)	280
2.82 (0.1110)	282
2.84 (0.1118)	284
2.86 (0.1126)	286
2.88 (0.1134)	288
2.90 (0.1142)	290
2.92 (0.1150)	292
2.94 (0.1157)	294
2.96 (0.1165)	296
2.98 (0.1173)	298

Valve (Cont'd)

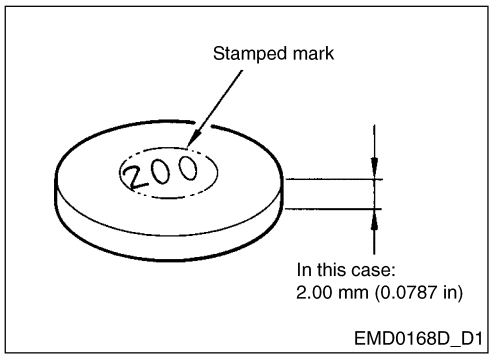

VALVE SEAT

Unit: mm (in)

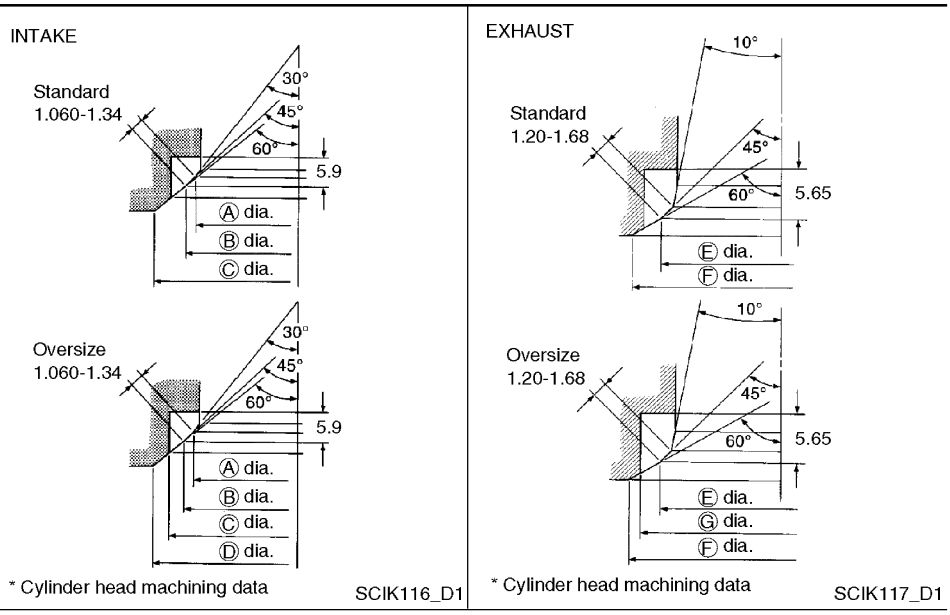

Diameter	QG16DE
A	27.8 - 28.0 (1.094 - 1.102)
B	29.5 - 29.7 (1.161 - 1.169)
C	31.9 - 32.1 (1.256 - 1.264)
D	31.500 - 31.516 (1.2402 - 1.2408)
E	24.5 - 24.7 (0.9646 - 0.9724)
F	26.2 - 26.4 (1.031 - 1.039)
G	26.500 - 26.516 (1.043 - 1.0439)

Camshaft and Camshaft Bearing

CAMSHAFT AND CAMSHAFT BEARING

Unit: mm (in)

Engine model		QG16DE
Cam height “A”	Intake	40.217 - 40.407 (1.5833 - 1.5908)
	Exhaust	40.056 - 38.965 - 39.155 (1.5341 - 1.5415)

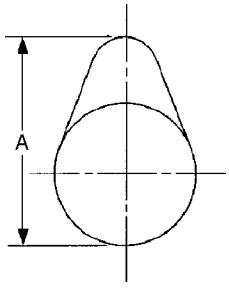

SCIK118_D1

* Total indicator reading

Unit: mm (in)

		Standard
Camshaft journal clearance	No. 1	0.045 - 0.086 (0.0018 - 0.0034)
	No. 2 to No. 5	0.030 - 0.071 (0.0012 - 0.0028)
Camshaft bracket inner diameter	No. 1	28.000 - 28.021 (1.1024 - 1.1032)
	No. 2 to No. 5	23.985 - 24.006 (0.9443 - 0.9451)
Camshaft journal diameter	No. 1	27.935 - 27.955 (1.0998 - 1.1006)
	No. 2 to No. 5	23.935 - 23.955 (0.9423 - 0.9431)
Camshaft runout [TIR*]		Less than 0.04 (0.0016)
Camshaft end play	Intake (with intake valve timing control)	0.070 - 0.143 (0.0028 - 0.0056)
	Exhaust	0.115 - 0.188 (0.0045 - 0.0074)

* Total indicator reading

Cylinder Block

CYLINDER BLOCK

Unit: mm (in)

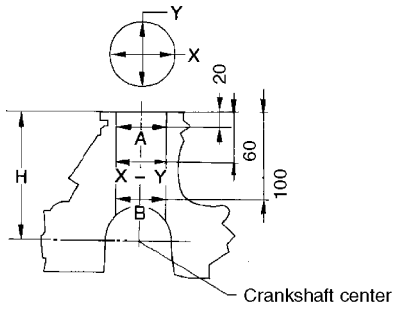

			QG16DE	Limit
			Standard	
Surface flatness			Less than 0.03 (0.0012)	0.1 (0.004)
Height “H” (nominal)			213.95 - 214.05 (8.4232 - 8.4271)	-
Cylinder bore inner diameter	Standard	Grade No. 1	76.000 - 76.010 (2.9921 - 2.9925)	
		Grade No. 2	76.010 - 76.020 (2.9925 - 2.9929)	-
		Grade No. 3	76.020 - 76.030 (2.9929 - 2.9933)	
Out-of-round (Difference between X and Y)			Less than 0.015 (0.0006)	-
Taper (Difference between A and B)			Less than 0.01 (0.0004)	
Difference in inner diameter between cylinders			0.05 (0.0020)	0.2 (0.008)

Piston, Piston Ring and Piston Pin

PISTON

Unit: mm (in)

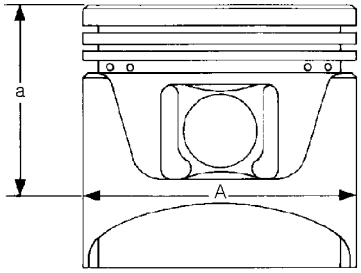

SCIK120_D1

			QG16DE
Piston skirt diameter “A”	Standard	Grade No. 1	75.975 - 75.985 (2.9911 - 2.9915)
		Grade No. 2	75.985 - 75.995 (2.9915 - 2.9919)
		Grade No. 3	75.995 - 76.005 (2.9919 - 2.9923)
0.25 (0.0098) oversize (service)			-
0.5 (0.002) oversize (service)			76.475 - 76.505 (3.0108 - 3.0120)
1.0 (0.039) oversize (service)			76.975 - 77.005 (3.0305 - 3.0317)
“a” dimension			44.5 (1.7520)
Piston pin hole inner diameter			18.987 - 18.999 (0.7475 - 0.7480)
Piston to bore clearance			0.015 - 0.035 (0.0006 - 0.0014)

PISTON RING

Unit: mm (in)

		QG16DE	
		Standard	Limit
Side clearance	Top	0.050 - 0.085 (0.0020 - 0.0033)	0.110 (0.0043)
	2nd	0.030 - 0.070 (0.0012 - 0.0028)	0.100 (0.0039)
	Oil	0.050 - 0.120 (0.0020 - 0.0047)	-
End gap	Top	0.20 - 0.44 (0.0079 - 0.0173)	0.58 (0.0228)
	2nd	0.37 - 0.61 (0.0146 - 0.0240)	0.72 (0.0283)
	Oil	0.20 - 0.69 (0.0079 - 0.0272)	0.95 (0.0374)

Piston, Piston Ring and Piston Pin (Cont'd)

PISTON PIN

Unit: mm (in)

		QG16DE
Piston pin outer diameter		18.989 - 19.001 (0.7476 - 0.7481)
Piston pin to piston clearance		-0.004 to 0 (-0.0002 to 0)
Piston pin to connecting rod bushing clearance	Standard	0.005 - 0.017 (0.0002 - 0.0007)

CONNECTING ROD

Unit: mm (in)

Center distance		140.45 - 140.55 (5.5295 - 5.5335)
Bend limit [per 100 (3.94)]		0.15 (0.0059)
Torsion limit [per 100 (3.94)]		0.3 (0.012)
Connecting rod bushing inner diameter* (small end)		19.000 - 19.012 (0.7480 - 0.7485)
Connecting rod big end inner diameter		43.000 - 43.013 (1.6929 - 1.6934)
Side clearance	Standard	0.200 - 0.470 (0.0079 - 0.0185)
	Limit	0.5 (0.020)

* Total indicator reading

Crankshaft, Main Bearing

CRANKSHAFT

Unit: mm (in)

		QG16DE
Main journal dia. “Dm”	Grade No. 0	49.956 - 49.964 (1.9668 - 1.9671)
	Grade No. 1	49.948 - 49.956 (1.9665 - 1.9668)
	Grade No. 2	49.940 - 49.948 (1.9661 - 1.9665)
Pin journal dia. “Dp”	Grade No. 0	39.968 - 39.974 (1.5735 - 1.5738)
	Grade No. 1	39.962 - 39.968 (1.5733 - 1.5735)
	Grade No. 2	39.956 - 39.962 (1.5731 - 1.5733)
Center distance “r”		43.95 - 44.05 (1.7303 - 1.7342)
Out-of-round (Difference between X and Y)	Standard	Less than 0.003 (0.0001)
	Limit	Less than 0.005 (0.0002)
Taper (Difference between A and B)	Standard	Less than 0.004 (0.0002)
	Limit	Less than 0.005 (0.0002)
Runout [TIR*]	Standard	Less than 0.04 (0.0016)
	Limit	Less than 0.05 (0.0020)
Free end play	Standard	0.060 - 0.220 (0.0024 - 0.0087)
	Limit	0.3 (0.012)

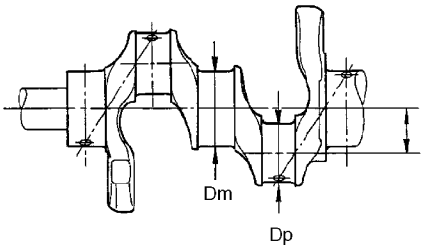

Out-of-round : Difference between X and Y.
Taper : Difference between A and B.

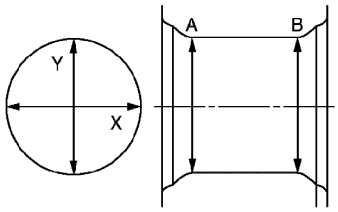

SCIK121_D1

*: Total indicator reading

Main Bearing

STANDARD

Unit: mm (in)

Grade No.	Thickness “T” mm (in)	Identification color
0	1.827 - 1.831 (0.0719 - 0.0721)	Black
1	1.831 - 1.835 (0.0721 - 0.0722)	Brown
2	1.835 - 1.839 (0.0722 - 0.0724)	Green
3	1.839 - 1.843 (0.0724 - 0.0726)	Yellow
4	1.843 - 1.847 (0.0726 - 0.0727)	Blue

UNDERSIZE

Unit: mm (in)

Grade No.	Thickness	Identification color
0.25 (0.0098)	1.960 - 1.964 (0.0772 - 0.0773)	-
0.50 (0.0197)	2.085 - 2.089 (0.0821 - 0.0822)	-

Connecting Rod Bearing, Miscellaneous Components

Connecting Rod Bearing

STANDARD SIZE

Unit: mm (in)

Grade No.	Thickness	Identification color
0	1.503 - 1.506 (0.0592 - 0.0593)	-
1	1.506 - 1.509 (0.0593 - 0.0594)	Brown
2	1.509 - 1.512 (0.0594 - 0.0595)	Green

UNDERSIZE

Unit: mm (in)

Grade No.	Thickness	Identification color
0.08 (0.0031)	1.542 - 1.546 (0.0607 - 0.0609)	-
0.12 (0.0047)	1.562 - 1.566 (0.0615 - 0.0617)	-
0.25 (0.0098)	1.627 - 1.631 (0.0641 - 0.0642)	-

BEARING CLEARANCE

Unit: mm (in)

Main bearing clearance	Standard	0.018 - 0.042 (0.0007 - 0.0017)
	Limit	0.1 (0.004)
Connecting rod bearing clearance	Standard	0.014 - 0.039 (0.0006 - 0.0015)
	Limit	0.1 (0.004)

MISCELLANEOUS COMPONENTS

Unit: mm (in)

		Limit
Flywheel runout [TIR*]		Less than 0.15 (0.0059)
Drive plate runout [TIR*]		Less than 0.2 (0.008)
Camshaft sprocket runout [TIR*]	Intake (with intake valve timing control)	0.20 (0.0079)
	Exhaust	0.15 (0.0059)

*: Total indicator reading