2018

Express Owner's Manual

chevrolet.com (U.S.)
chevrolet.ca (Canada)

Contents

Introduction 2
In Brief 5
Keys, Doors, and Windows 24
Seats and Restraints 41
Storage 88
Instruments and Controls 90
Lighting 122
Infotainment System 129
Climate Controls 156
Driving and Operating 162
Vehicle Care 213
Service and Maintenance 301
Technical Data 314
Customer Information 318
Reporting Safety Defects 329
OnStar 332
Index 344

Introduction

The names, logos, emblems, slogans, vehicle model names, and vehicle body designs appearing in this manual including, but not limited to, GM, the GM logo, CHEVROLET, the CHEVROLET Emblem, and EXPRESS are trademarks and/or service marks of General Motors LLC, its subsidiaries, affiliates, or licensors.

For vehicles first sold in Canada, substitute the name “General Motors of Canada Company” for Chevrolet Motor Division wherever it appears in this manual.

This manual describes features that may or may not be on the vehicle because of optional equipment that was not purchased on the vehicle, model variants, country specifications, features/applications that may not be available in your region, or changes subsequent to the printing of this owner’s manual.

If the vehicle has the Duramax Diesel engine, see the Duramax diesel supplement for additional and specific information on this engine.

Refer to the purchase documentation relating to your specific vehicle to confirm the features.

Keep this manual in the vehicle for quick reference.

Canadian Vehicle Owners

A French language manual can be obtained from your dealer, at www.helminc.com, or from:

Propriétaires Canadiens

On peut obtenir un exemplaire de ce guide en français auprès du concessionnaire ou à l'adresse suivante:

Helm, Incorporated
Attention: Customer Service
47911 Halyard Drive
Plymouth, MI 48170
USA

Using this Manual

To quickly locate information about the vehicle, use the Index in the back of the manual. It is an alphabetical list of what is in the manual and the page number where it can be found.

Danger, Warning, and Caution

Warning messages found on vehicle labels and in this manual describe hazards and what to do to avoid or reduce them.

Litho in U.S.A.
Part No. 23380338 B Second Printing

©2018 General Motors LLC. All Rights Reserved.

⚠ Danger

Danger indicates a hazard with a high level of risk which will result in serious injury or death.

⚠ Warning

Warning indicates a hazard that could result in injury or death.

Caution

Caution indicates a hazard that could result in property or vehicle damage.

A circle with a slash through it is a safety symbol which means “Do Not,” “Do not do this,” or “Do not let this happen.”

Symbols

The vehicle has components and labels that use symbols instead of text. Symbols are shown along with the text describing the operation or information relating to a specific component, control, message, gauge, or indicator.

: Shown when the owner’s manual has additional instructions or information.

: Shown when the service manual has additional instructions or information.

: Shown when there is more information on another page — “see page.”

Vehicle Symbol Chart

Here are some additional symbols that may be found on the vehicle and what they mean. See the features in this manual for information.

: Airbag Readiness Light

: Air Conditioning

: Antilock Brake System (ABS)

: Brake System Warning Light

: Charging System

: Cruise Control

: Do Not Puncture

: Do Not Service

: Engine Coolant Temperature

: Exterior Lamps

: Flame/Fire Prohibited

: Fuel Gauge

: Fuses

: Headlamp High/Low-Beam Changer

: ISOFIX/LATCH System Child Restraints

: Malfunction Indicator Lamp

: Oil Pressure

: Power

: Remote Vehicle Start

: Seat Belt Reminders

: Tire Pressure Monitor

: Traction Control/StabiliTrak

: Under Pressure

: Windshield Washer Fluid

In Brief

Instrument Panel
Instrument Panel 6

Initial Drive Information
Initial Drive Information 8
Remote Keyless Entry (RKE) System 8
Remote Vehicle Start 8
Door Locks 9
Windows 9
Seat Adjustment 10
Seat Belts 11
Airbag On-Off Switch 11
Mirror Adjustment 12
Steering Wheel Adjustment 12
Interior Lighting 13
Exterior Lighting 14
Windshield Wiper/Washer 14
Climate Controls 15
Transmission 16

Vehicle Features
Infotainment System 17
Radio(s) 17
Satellite Radio 18
Portable Audio Devices 18
Bluetooth 19
Steering Wheel Controls 19
Cruise Control 20
Side Blind Zone Alert (SBZA) 20
Rear Vision Camera (RVC) 20
Parking Assist 20
Power Outlets 21

Performance and Maintenance
Traction Control/Electronic Stability Control 21
Tire Pressure Monitor 22
Fuel (Gasoline) 22
Fuel (Diesel) 22
E85 or FlexFuel 22
Engine Oil Life System 22
Driving for Better Fuel Economy 23
Roadside Assistance Program 23

Instrument Panel

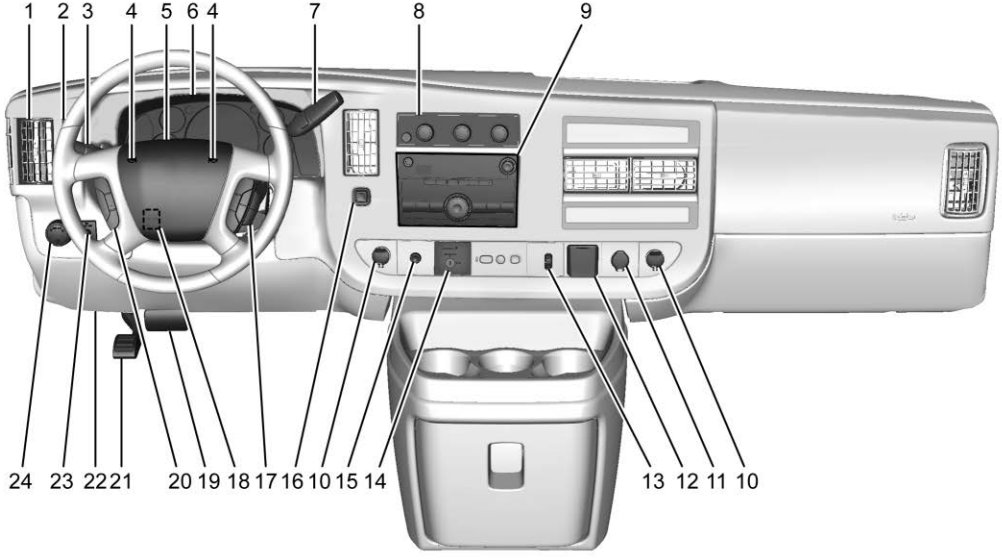

1. *Air Vents* ⇨ *161*.
2. Driver Information Center (DIC) Buttons (Out of View). See *Driver Information Center (DIC)* ⇨ *111*.
3. Turn Signal Lever. See *Turn and Lane-Change Signals* ⇨ *125*.

   Windshield Wiper/Washer ⇨ *92*.
4. *Horn* ⇨ *92*.
5. *Hazard Warning Flashers* ⇨ *125*.
6. *Instrument Cluster* ⇨ *98*.
7. Shift Lever. See *Automatic Transmission* ⇨ *182*.

   Manual Mode ⇨ *185* (If Equipped).
8. *Climate Control Systems* ⇨ *156*.
9. *Infotainment* ⇨ *129*.
10. *Power Outlets* ⇨ *95*.
11. USB Port (If Equipped). See *Auxiliary Devices* ⇨ *143*.
12. Power Outlet 110/120 Volt Alternating Current. See *Power Outlets* ⇨ *95*.
13. *Rear Heating System* ⇨ *158* (If Equipped).
14. Passenger Airbag On-Off Switch (If Equipped). See *Airbag On-Off Switch* ⇨ *63*.
15. *Traction Control/Electronic Stability Control* ⇨ *188*.
16. Tow/Haul Mode Button (If Equipped). See *Tow/Haul Mode* ⇨ *185*.
17. *Steering Wheel Controls* ⇨ *91* (If Equipped).
18. *Steering Wheel Adjustment* ⇨ *91* (Out of View), (If Equipped).
19. Parking Brake Release. See *Parking Brake* ⇨ *187*.
20. *Cruise Control* ⇨ *191* (If Equipped).

    Fast Idle System ⇨ *176* (If Equipped).
21. *Parking Brake* ⇨ *187*.
22. Data Link Connector (DLC) (Out of View). See *Malfunction Indicator Lamp (Check Engine Light)* ⇨ *105*.
23. *Instrument Panel Illumination Control* ⇨ *126*.

    Dome Lamp Override. See *Dome Lamps* ⇨ *126*.
24. *Exterior Lamp Controls* ⇨ *122*.

Initial Drive Information

This section provides a brief overview about some of the important features that may or may not be on your specific vehicle.

For more detailed information, refer to each of the features which can be found later in this owner's manual.

Remote Keyless Entry (RKE) System

If equipped, the Remote Keyless Entry (RKE) transmitter is used to remotely lock and unlock the doors from up to 60 m (197 ft) away from the vehicle.

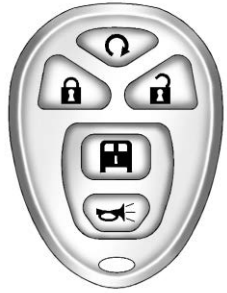

RKE Transmitter with Remote Start Shown

: Press to lock all doors.

Lock and unlock feedback can be personalized. See *Vehicle Personalization* ⇨ *116*.

: Press to unlock the driver door. Press again within five seconds to unlock all remaining doors.

: Press to unlock only the cargo doors.

: Press and release to locate the vehicle. Press and hold for more than two seconds to sound the panic alarm. Press again to cancel the panic alarm or turn the ignition on.

See *Keys* ⇨ *24* and *Remote Keyless Entry (RKE) System Operation* ⇨ *26*.

Remote Vehicle Start

If equipped, the engine can be started from outside of the vehicle.

Starting the Vehicle

1. Press and release on the RKE transmitter.
2. Immediately press and hold for at least four seconds or until the turn signal lamps flash.

Start the vehicle normally after entering.

When the vehicle starts, the parking lamps will turn on.

Remote start can be extended.

Canceling a Remote Start

To cancel a remote start, do one of the following:

- Press and hold ⟲ until the parking lamps turn off.
- Turn on the hazard warning flashers.
- Turn the vehicle on and then off.

See *Remote Vehicle Start* ⇨ *28*.

Door Locks

Manual Door Locks

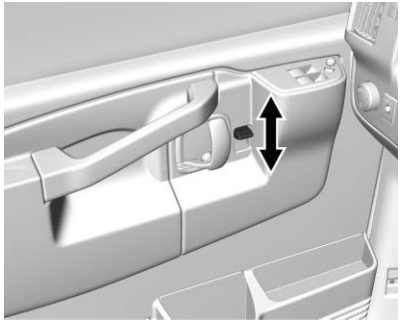

Lock and unlock the door from the outside using the key or the Remote Keyless Entry (RKE) transmitter, if equipped. From the inside, slide the manual lever on the door up or down.

See *Door Locks* ⇨ *29*.

Power Door Locks

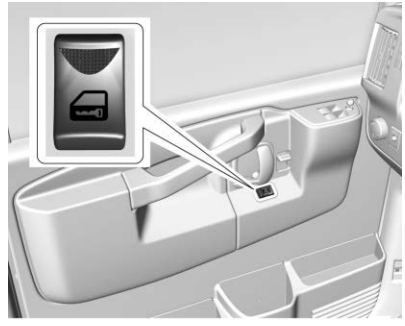

If equipped, press 🚗 to lock or unlock the doors.

See *Power Door Locks* ⇨ *30*.

Windows

Manual Windows

Turn the hand crank on each door to raise or lower the side door windows.

See *Manual Windows* ⇨ *38*.

Power Windows

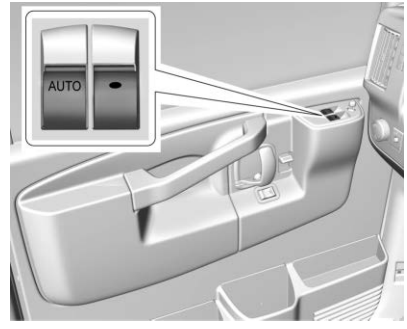

If equipped, power windows work when the ignition is on, in ACC/ACCESSORY, or when Retained Accessory Power (RAP) is active.

See *Retained Accessory Power (RAP)* ⇨ *177*.

Using the window switch, press to open or pull to close the window.

The windows may be temporarily disabled if they are used repeatedly within a short time.

See *Power Windows* ⇨ *38*.

Seat Adjustment

Manual Seats

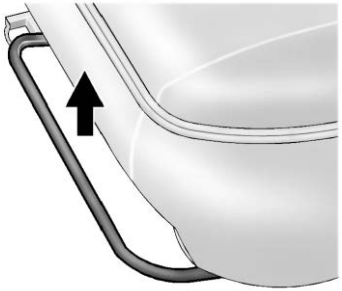

To adjust the manual seat:

1. Lift the bar under the front edge of the seat cushion to unlock the seat.
2. Slide the seat to the desired position and release the bar.
3. Try to move the seat back and forth to be sure the seat is locked in place.

See *Seat Adjustment* ⇨ *42*.

Power Seats

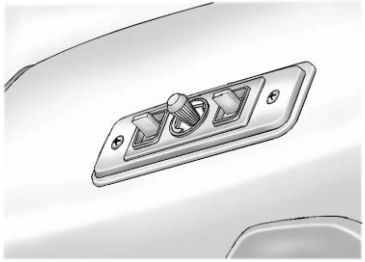

To adjust a power seat, if available, use the controls on the front of the seat:

- Adjust the seat by moving the center knob up, down, right, or left.
- Raise and lower the front or rear of the seat cushion by moving the right or left lever up or down.

See *Power Seat Adjustment* ⇨ *42*.

Reclining Seatbacks

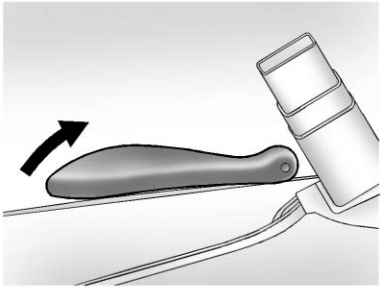

To recline the seatback:

1. Lift the lever on the inboard side of the seat.
2. Move the seatback to the desired position, and then release the lever to lock the seatback in place.
3. Push and pull on the seatback to make sure it is locked.

To return the seatback to the upright position:

1. Lift the lever fully without applying pressure to the seatback, and the seatback will return to the upright position.
2. Push and pull on the seatback to make sure it is locked.

See *Reclining Seatbacks* ⇨ *43*.

Seat Belts

Refer to the following sections for important information on how to use seat belts properly:

- *Seat Belts* ⇨ *47*.
- *How to Wear Seat Belts Properly* ⇨ *48*.
- *Lap-Shoulder Belt* ⇨ *49*.
- *Lower Anchors and Tethers for Children (LATCH System)* ⇨ *75*.

Airbag On-Off Switch

If the instrument panel has one of the switches pictured in the following illustrations, the vehicle has an airbag on-off switch that you can use to manually turn on or off the front outboard passenger airbag.

United States

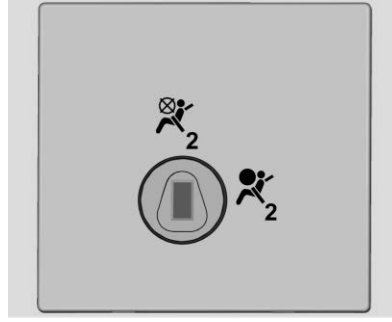

Canada and Mexico

To operate the airbag on-off switch, use the vehicle key.

See *Airbag On-Off Switch* ⇨ *63* for important information.

Mirror Adjustment

Exterior Mirrors

Vehicles with manual outside mirrors can be adjusted by moving the mirror up and down or left and right so you can see a little of the side of the vehicle, and a clear view of objects behind you.

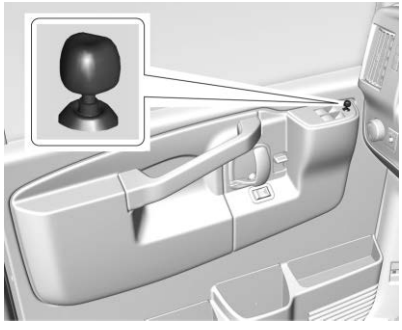

If equipped with power mirrors, select each mirror by turning the knob clockwise for the passenger side mirror or counterclockwise for the driver side mirror. Adjust the mirror angle by moving the knob in the desired direction.

Keep the selector switch in the center position when not adjusting either outside mirror.

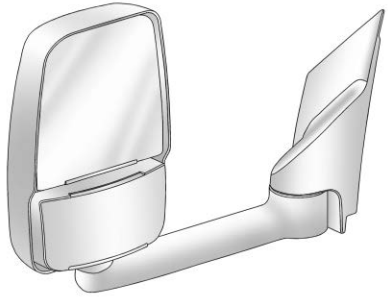

If equipped, towing mirrors can be adjusted manually for a clear view of the objects behind you.

Manually fold the mirrors inward to prevent damage when going through an automatic car wash. To fold, pull the mirror toward the vehicle. Push the mirror outward to return it to the original position.

Interior Mirror

Adjust the rearview mirror for a clear view of the area behind your vehicle.

Push the tab forward for daytime use and pull it rearward for nighttime use to avoid glare of the headlamps from behind.

See *Manual Rearview Mirror* ⇨ *37*.

Steering Wheel Adjustment

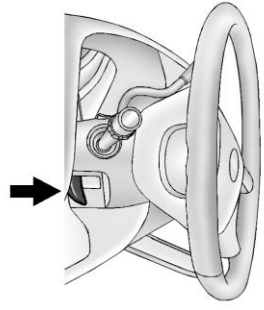

If equipped with a tilt steering wheel, the lever is on the left side of the steering column.

To adjust the steering wheel:

1. Pull the lever to move the steering wheel up or down into a comfortable position.
2. Release the lever to lock the steering wheel in place.

See *Steering Wheel Adjustment* ⇨ *91*.

Interior Lighting

Dome Lamps

The dome lamps come on when any door is opened. They turn off after all the doors are closed.

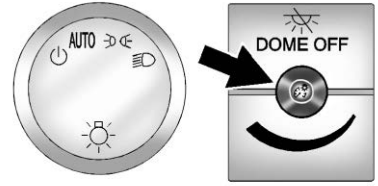

The instrument panel brightness knob extends when is pressed. To manually turn on the dome lamps, press then turn the knob clockwise to the farthest position. In this position, the dome lamps remain on whether a door is opened or closed.

DOME OFF : This button is located above the instrument panel brightness knob.

Press the button in and the dome lamps remain off when a door is opened. Press the button again so that the dome lamps come on when a door is opened.

Reading Lamps

If equipped with reading lamps, press the button located next to each lamp to turn it on or off.

The vehicle may also have reading lamps in other locations. The lamps cannot be adjusted.

For more information on interior lighting, see:

- *Instrument Panel Illumination Control* ⇨ *126*.
- *Entry/Exit Lighting* ⇨ *127*.

Exterior Lighting

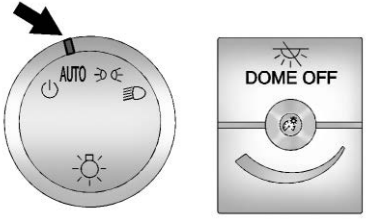

The exterior lamp control is on the instrument panel to the left of the steering wheel.

⏻ **:** Briefly turn the control to this position to turn the automatic headlamps and Daytime Running Lamps (DRL) off or back on.

For vehicles first sold in Canada, the off position only works for vehicles that are shifted into the P (Park) position.

AUTO : Automatically turns the exterior lamps on and off, depending on outside lighting.

: Turns on the parking lamps including all lamps, except the headlamps.

: Turns on the headlamps together with the parking lamps and instrument panel lights.

See:

- *Exterior Lamp Controls* ⇨ *122*
- *Daytime Running Lamps (DRL)* ⇨ *123*
- *Automatic Headlamp System* ⇨ *124*

Windshield Wiper/Washer

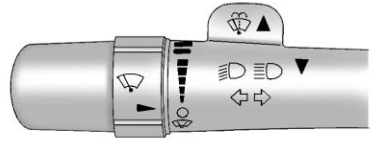

The lever is on the left side of the steering column.

: Use for a single wiping cycle.

: Use to adjust the delay time between wipes. Turn the band up or down for more frequent wipes or less frequent wipes.

: Fast wipes.

: Slow wipes.

: Use to turn the wipers off.

: Push the paddle on top of the turn signal lever to spray washer fluid on the windshield.

See *Windshield Wiper/Washer* ⇨ *92*.

Climate Controls

The vehicle's heating, cooling, and ventilation can be controlled with these systems.

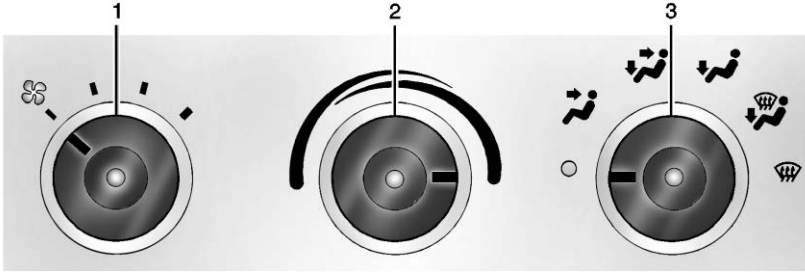

Vehicles without Air Conditioning

1. Fan Control
2. Temperature Control
3. Air Delivery Mode Control

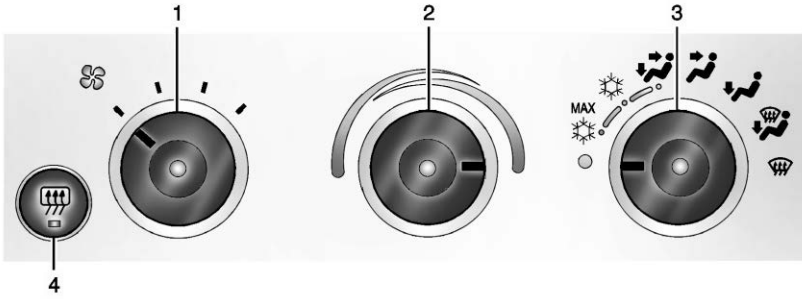

Vehicles with Air Conditioning

1. Fan Control
2. Temperature Control
3. Air Delivery Mode Control
4. Rear Window Defogger

See *Climate Control Systems* ⇨ *156*. See *Rear Heating System* ⇨ *158*, if equipped or *Rear Climate Control System* ⇨ *158*, if equipped.

Transmission

Range Selection Mode

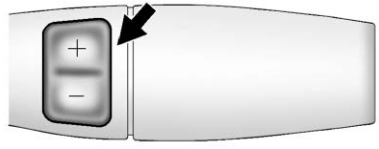

If equipped, Range Selection Mode helps control the vehicle's transmission and vehicle speed while driving downhill or towing a trailer by letting you select a desired range of gears.

To use this feature:

1. Move the shift lever to M (Manual Mode).
2. Press the +/− buttons on the shift lever, to select the desired range of gears for current driving conditions.

When M (Manual Mode) is selected, the transmission will downshift and a number displays in the Driver Information Center (DIC) next to the M indicating the current gear.

Grade Braking is not available when Range Selection Mode is active. See *Tow/Haul Mode* ⇨ *185*.

While using Range Selection Mode, cruise control and the Tow/Haul Mode can be used. See *Manual Mode* ⇨ *185*.

Vehicle Features

Infotainment System

If the vehicle has a base radio it is included in this manual. See the separate infotainment manual for information on the connected radios, audio players, phone, navigation system, and voice or speech recognition. There is also information on settings and downloadable applications (if equipped).

Radio(s)

Radio with CD/MP3

⏻ **:** Press to turn the system on and off. Turn to increase or decrease the volume.

BAND : Press to choose between FM1, FM2, AM, and SiriusXM, if equipped.

♫ **:** Turn to select radio stations.

⏮ **SEEK or** ⏭ **SEEK :** Seek or scan stations.

i : Press to switch the display between the radio station frequency and the time. While the ignition is off, press this button to display the time. Press to display additional text information related to the current

FM-RDS station or MP3 song. A choice of additional information such as Channel, Song, Artist, and CAT (category) can display. Continue pressing to highlight the desired tab, or press the softkey under any one of the tabs and the information about that tab displays.

For more information about these and other radio features, see *Infotainment* ⇨ *129*.

Storing a Favorite Station

Depending on which radio the vehicle has, radio stations are stored as either favorites or presets.

For vehicles with a FAV button, a maximum of 36 stations can be stored as favorites using the six softkeys below the radio station frequency tabs and by using the radio FAV button. Press FAV to go through up to six pages of favorites, each having six favorite stations available per page. Each page of favorites can contain any combination of AM and FM stations.

For more information on storing a favorite station, see *Operation* ⇨ *133*.

Setting the Clock

1. With the radio on, press ◷ and the HR, MIN, MM, DD, and YYYY (hour, minute, month, day, and year) display.
2. Press the softkey under any one of the tabs to be changed.
3. Press ⏮ SEEK or ⏭ SEEK, ◁◁ REV or ▷▷ FWD, or turn ♫ clockwise or counterclockwise to increase or decrease the time or date.

For more information on setting the clock, see *Clock* ⇨ *95*.

Satellite Radio

SiriusXM® is a satellite radio service based in the 48 contiguous United States and 10 Canadian provinces. SiriusXM satellite radio has a wide variety of programming and commercial-free music, coast to coast, and in digital-quality sound.

A fee is required to receive the SiriusXM service.

For more information, refer to:

- www.siriusxm.com or call 1-888-601-6296 (U.S.)
- www.siriusxm.ca or call 1-877-438-9677 (Canada)

See *Satellite Radio* ⇨ *136*.

Portable Audio Devices

This vehicle may have an auxiliary input on the center stack and a USB port on the instrument panel. External devices such as an iPod, laptop computer, MP3 player, or USB storage device can be connected to the auxiliary port using a 3.5 mm (1/8 in) input cable or the USB port depending on the audio system.

See "Using the Auxiliary Input Jack" and "Using the USB Port" in *Auxiliary Devices* ⇨ *143*.

Bluetooth

If equipped with a Bluetooth system, it allows users with a Bluetooth-enabled cell phone to make and receive hands-free calls using the vehicle's audio system and controls.

The Bluetooth-enabled cell phone must be paired with the Bluetooth system before it can be used in the vehicle. Not all phones will support all functions. For more information, see www.gm.com/bluetooth and *Bluetooth* ⇨ *148*.

Steering Wheel Controls

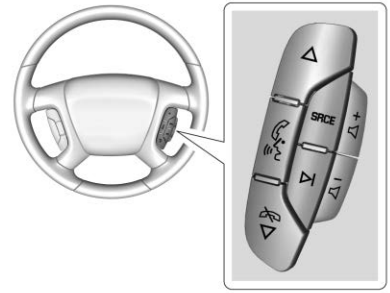

If equipped with audio steering wheel controls, some audio controls can be adjusted at the steering wheel.

△ **:** Press to go to the next favorite radio station, track on a CD, or folder on an iPod® or USB device.

/ ▽ **:** Press to go to the previous favorite radio station, track on a CD, or folder on an iPod® or USB device. Also press to reject an incoming call, or end a current call.

/ **:** Press to silence the vehicle speakers only. Press again to turn the sound on. Press and hold longer than two seconds to interact with OnStar® or Bluetooth systems, if equipped.

+ **:** Press to increase volume.

− **:** Press to decrease volume.

SRCE **:** Press to switch between the radio and CD, and for equipped vehicles, the front auxiliary.

: Press to seek to the next radio station, the next track while sourced to the CD, or to select tracks and folders on an iPod® or USB device.

See *Steering Wheel Controls* ⇨ *91*.

Cruise Control

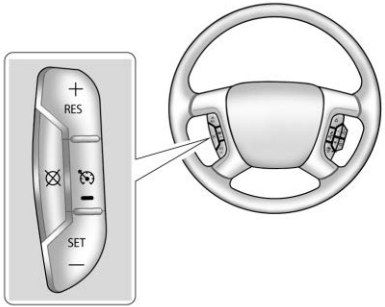

: If equipped, press to turn cruise control on or off. The white indicator comes on in the instrument cluster when cruise control is turned on.

+RES : If there is a set speed in memory, press briefly to resume to a previously set speed, or press and hold to accelerate. If cruise control is already active, use to increase vehicle speed.

SET− : Press briefly to set the speed and activate cruise control, or press and hold to decelerate. If cruise control is already active, use to decrease vehicle speed.

: Press to disengage cruise control without erasing the set speed from memory.

See *Cruise Control* ⇨ *191*, if equipped.

Side Blind Zone Alert (SBZA)

If equipped, SBZA will detect moving vehicles in the next lane over in the vehicle's side blind zone area. When this happens, the SBZA display will light up in the corresponding outside side mirror and will flash if the turn signal is on.

See *Side Blind Zone Alert (SBZA)* ⇨ *195*.

Rear Vision Camera (RVC)

If equipped, the RVC displays a view of the area behind the vehicle when the vehicle is shifted into R (Reverse).

To clean the camera lens, rinse it with water and wipe it with a soft cloth.

See *Rear Vision Camera (RVC)* ⇨ *193*.

Parking Assist

If equipped, Rear Parking Assist (RPA) uses sensors on the rear bumper to assist with parking and avoiding objects while in R (Reverse). It operates at speeds less than 8 km/h (5 mph) and uses audible beeps to provide distance and system information.

Keep the sensors on the vehicle's rear bumper clean to ensure proper operation.

See *Parking Assist* ⇨ *194*.

Power Outlets

The accessory power outlets can be used to plug in electrical equipment, such as a cell phone or an MP3 player.

The vehicle may have two accessory power outlets on the instrument panel.

Remove the cover to access and replace when not in use.

See *Power Outlets* ⇨ *95*.

Performance and Maintenance

Traction Control/ Electronic Stability Control

The vehicle has a Traction Control System (TCS) that limits wheel spin and the StabiliTrak system that assists with directional control of the vehicle in difficult driving conditions. Both systems turn on automatically every time the vehicle is started.

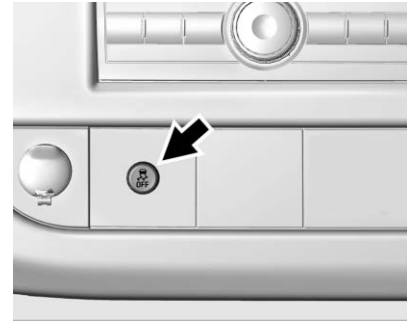

- To turn off TCS, press and release OFF. The appropriate Driver Information Center (DIC) message will display.
- To turn off both TCS and StabiliTrak, press and hold OFF until the StabiliTrak OFF light OFF illuminates and the appropriate DIC messages display.
- Press and release OFF again to turn on both systems.

StabiliTrak will automatically turn on if the vehicle exceeds 32 km/h (20 mph). TCS will remain off until OFF is pressed or the ignition is cycled off then on.

See *Traction Control/Electronic Stability Control* ⇨ *188*.

Tire Pressure Monitor

This vehicle may have a Tire Pressure Monitor System (TPMS).

The low tire pressure warning light alerts to a significant loss in pressure of one of the vehicle's tires. If the warning light comes on, stop as soon as possible and inflate the tires to the recommended pressure shown on the Tire and Loading Information label. See *Vehicle Load Limits* ⇨ *169*. The warning light will remain on until the tire pressure is corrected.

The low tire pressure warning light may come on in cool weather when the vehicle is first started, and then turn off as the vehicle is driven. This may be an early indicator that the tire pressures are getting low and the tires need to be inflated to the proper pressure.

The TPMS does not replace normal monthly tire maintenance. Maintain the correct tire pressures.

See *Tire Pressure Monitor System* ⇨ *264*.

Fuel (Gasoline)

Regular Fuel

Use only unleaded gasoline rated 87 octane or higher in your vehicle. Do not use gasoline with an octane rating lower as it may result in vehicle damage and lower fuel economy. See *Fuel* ⇨ *197*.

Fuel (Diesel)

For diesel vehicles, do not use gasoline. See “Fuel for Diesel Engines” in the Duramax diesel supplement.

E85 or FlexFuel

FlexFuel Possible

Certain models are compatible with E85 fuel. See *E85 or FlexFuel* ⇨ *199*.

Engine Oil Life System

The engine oil life system calculates engine oil life based on vehicle use and displays the CHANGE ENGINE OIL SOON message when it is time to change the engine oil and filter. The oil life system should be reset to 100% only following an oil change.

Resetting the Oil Life System

1. Display the OIL LIFE REMAINING on the DIC. See *Driver Information Center (DIC)* ⇨ *111*.
2. Press and hold ✓ on the DIC while the Oil Life display is active. The oil life will change to 100%.

The oil life system can also be reset as follows:

1. Display the OIL LIFE REMAINING on the DIC. See *Driver Information Center (DIC)* ⇨ *111*.
2. Fully press and release the accelerator pedal three times within five seconds. If the display shows 100%, the system is reset.

See *Engine Oil Life System* ⇨ *222*.

Driving for Better Fuel Economy

Driving habits can affect fuel mileage. Here are some driving tips to get the best fuel economy possible.

- Avoid fast starts and accelerate smoothly.
- Brake gradually and avoid abrupt stops.
- Avoid idling the engine for long periods of time.
- When road and weather conditions are appropriate, use cruise control.
- Always follow posted speed limits or drive more slowly when conditions require.
- Keep vehicle tires properly inflated.
- Combine several trips into a single trip.
- Replace the vehicle's tires with the same TPC Spec number molded into the tire's sidewall near the size.
- Follow recommended scheduled maintenance.

Roadside Assistance Program

U.S.: 1-800-243-8872

TTY Users (U.S. Only): 1-888-889-2438

Canada: 1-800-268-6800

New Chevrolet owners are automatically enrolled in the Roadside Assistance Program.

See *Roadside Assistance Program* ⇨ *322*.

Keys, Doors, and Windows

Keys and Locks
Keys 24
Remote Keyless Entry (RKE) System 26
Remote Keyless Entry (RKE) System Operation 26
Remote Vehicle Start 28
Door Locks 29
Power Door Locks 30
Cargo Door Relocking 30
Delayed Locking 30
Automatic Door Locks 31
Lockout Protection 31
Safety Locks 31

Doors
Side Door (60/40 Swing-Out) 32
Sliding Door 33
Rear Doors 33

Vehicle Security
Vehicle Security 34
Immobilizer 34
Immobilizer Operation 34

Exterior Mirrors
Convex Mirrors 36
Manual Mirrors 36
Trailer-Tow Mirrors 36
Power Mirrors 36
Folding Mirrors 37
Heated Mirrors 37

Interior Mirrors
Interior Rearview Mirrors 37
Manual Rearview Mirror 37

Windows
Windows 38
Manual Windows 38
Power Windows 38
Swing-Out Windows 39
Enhanced Technology Glass . . . 40
Rear Windows 40
Sun Visors 40

Keys and Locks

Keys

⚠ Warning

Leaving children in a vehicle with the ignition key is dangerous and children or others could be seriously injured or killed. They could operate the power windows or other controls or make the vehicle move. The windows will function with the keys in the ignition, and children or others could be caught in the path of a closing window. Do not leave children in a vehicle with the ignition key.

⚠ Warning

If the key is unintentionally rotated while the vehicle is running, the ignition could be moved out of the RUN position. This could be caused by heavy items hanging from the key ring, or by large or long items attached to the key ring that could be contacted by the driver or steering wheel. If the ignition moves out of the RUN position, the engine will shut off, braking and steering power assist may be

(Continued)

Warning (Continued)

impacted, and airbags may not deploy. To reduce the risk of unintentional rotation of the ignition key, do not change the way the ignition key and Remote Keyless Entry (RKE) transmitter, if equipped, are connected to the provided key rings.

The ignition key and key rings, and RKE transmitter, if equipped, are designed to work together as a system to reduce the risk of unintentionally moving the key out of the RUN position. The ignition key has a small hole to allow attachment of the provided key ring. It is important that any replacement ignition keys have a small hole. See your dealer if a replacement key is required.

The combination and size of the rings that came with your keys were specifically selected for your vehicle. The rings are connected to the key like two links of a chain to reduce the risk of unintentionally moving the key out of the RUN position. Do not add any additional items to the ring attached to the ignition key. Attach additional items only to the second ring, and limit added items to a few essential keys or small, light items no larger than an RKE transmitter.

Interference from radio-frequency identification (RFID) tags may prevent the key from starting the vehicle. Keep RFID tags away from the key when starting the vehicle.

The key is used for the ignition and all door locks.

The key has a bar-coded key tag that the dealer or qualified locksmith can use to make new keys. Store this information in a safe place, not in the vehicle.

See your dealer if a replacement key or additional key is needed.

If it becomes difficult to turn a key, inspect the key blade for debris. Periodically clean with a brush or pick.

If locked out of the vehicle, see *Roadside Assistance Program* ⇨ *322*.

With an active OnStar service plan, an OnStar Advisor may remotely unlock the vehicle. See *OnStar Overview* ⇨ *332*.

Remote Keyless Entry (RKE) System

See *Radio Frequency Statement* ⇨ *328*.

If there is a decrease in the Remote Keyless Entry (RKE) operating range:

- Check the distance. The transmitter may be too far from the vehicle.
- Check the location. Other vehicles or objects may be blocking the signal.
- Check the transmitter's battery. See “Battery Replacement” later in this section.
- If the transmitter is still not working correctly, see your dealer or a qualified technician for service.

Remote Keyless Entry (RKE) System Operation

If equipped, the RKE transmitter functions work up to 60 m (197 ft) away from the vehicle.

Other conditions can affect the performance of the transmitter. See *Remote Keyless Entry (RKE) System* ⇨ *26*.

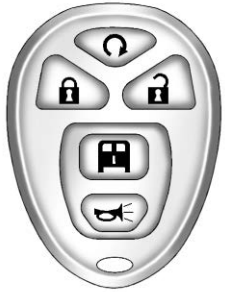

RKE Transmitter with Remote Start Shown

: Press once to lock all doors. If enabled through the Driver Information Center (DIC), the parking lamps flash once to indicate locking has occurred.

The horn may chirp when is pressed again within five seconds. See *Vehicle Personalization* ⇨ *116*.

: Press to unlock the driver door. If is pressed again within five seconds, all remaining doors unlock.

The interior lamps come on and stay on for 20 seconds or until the ignition is turned on. If enabled through the DIC, the parking lamps flash twice to indicate unlocking has occurred. See *Vehicle Personalization* ⇨ *116*.

: Press to unlock only the cargo doors.

: If equipped, press and then press and hold for at least four seconds or until the turn signal lamps flash to start the engine from outside the vehicle using the RKE transmitter. See *Remote Vehicle Start* ⇨ *28*.

: Press and release to locate the vehicle. The turn signal lamps flash and the horn sounds three times.

Press and hold for more than two seconds to sound the panic alarm. The turn signal lamps flash and the horn sounds repeatedly for 30 seconds. The alarm turns off when the ignition is turned on or is pressed again. The ignition must be off for the panic alarm to work.

Programming Transmitters to the Vehicle

Only RKE transmitters programmed to the vehicle will work. If a transmitter is lost or stolen, a replacement can be purchased and programmed through your dealer. When the replacement transmitter is programmed to the vehicle, all remaining transmitters must also be programmed. Any lost or stolen transmitters no longer work once the new transmitter is programmed. Each vehicle can have up to four transmitters programmed to it.

Battery Replacement

Replace the battery if the REPLACE BATTERY IN REMOTE KEY message displays in the DIC.

Caution

When replacing the battery, do not touch any of the circuitry on the transmitter. Static from your body could damage the transmitter.

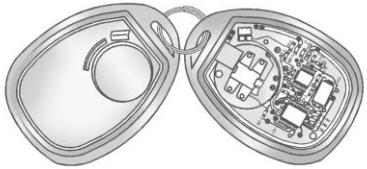

To replace the battery:

1. Separate the transmitter with a flat, thin object, such as a flat head screwdriver.
   - Carefully insert the tool into the notch located along the parting line of the transmitter. Do not insert the tool too far. Stop as soon as resistance is felt.
   - Twist the tool until the transmitter is separated.
2. Remove the old battery. Do not use a metal object.
3. Insert the new battery, positive side facing down. Replace with a CR2032 or equivalent battery.
4. Snap the transmitter back together.

Remote Vehicle Start

This vehicle may have a remote start feature. This feature allows you to start the engine from outside the vehicle. It may also start the vehicle's heating or air conditioning systems. See *Climate Control Systems* ⇨ *156*.

Laws in some local communities may restrict the use of remote starters. For example, some laws may require a person using remote start to have the vehicle in view when doing so. Check local regulations for any requirements on remote starting of vehicles.

Do not use the remote start feature if the vehicle is low on fuel. The vehicle may run out of fuel.

The RKE transmitter range may be less while the vehicle is running.

Other conditions can affect the performance of the transmitter. See *Remote Keyless Entry (RKE) System* ⇨ *26*.

: This button will be on the RKE transmitter if the vehicle has remote start.

To start the engine using the remote start feature:

1. Press and release on the transmitter.
2. Immediately press and hold until the turn signal lamps flash. If you cannot see the lamps, press and hold for at least four seconds.

When the engine starts, the parking lamps will turn on and remain on while the engine is running. The doors will be locked.

The engine will continue to run for 10 minutes. After 30 seconds, repeat the steps if a 10-minute extension is desired. Remote start can be extended only once.

After entering the vehicle during a remote start, turn the ignition on to drive the vehicle.

A maximum of two remote starts or a start with an extension are allowed between ignition cycles.

If the remote start procedure is used again before the first 10–minute time frame has ended, the first 10 minutes will immediately expire and the second 10–minute time frame will start.

After the engine has been remote started two times or a start with an extension, the ignition must be turned on and then off before the remote start procedure can be used again.

To cancel a remote start do any of the following:

- Press and hold ⟲ until the parking lamps turn off.
- Turn on the hazard warning flashers.
- Turn the ignition on and then off.

The remote vehicle start feature will not operate if:

- The key is in the ignition.
- The hood is open.
- The hazard warning flashers are on.
- There is an emission control system malfunction. See *Malfunction Indicator Lamp (Check Engine Light)* ⇨ *105*.
- The engine coolant temperature is too high.
- The oil pressure is low.
- Two remote starts or a start with an extension have already been provided.

Door Locks

⚠ Warning

- Passengers, especially children, can easily open the doors and fall out of a moving vehicle. When a door is locked, the handle will not open it. The chance of being thrown out of the vehicle in a crash is increased if the doors are not locked. So, all passengers should wear seat belts properly and the doors should be locked whenever the vehicle is driven.
- Young children who get into unlocked vehicles may be unable to get out. A child can be overcome by extreme heat and can suffer

(Continued)

Warning (Continued)

permanent injuries or even death from heat stroke. Always lock the vehicle whenever leaving it.

- Outsiders can easily enter through an unlocked door when you slow down or stop the vehicle. Locking the doors can help prevent this from happening.

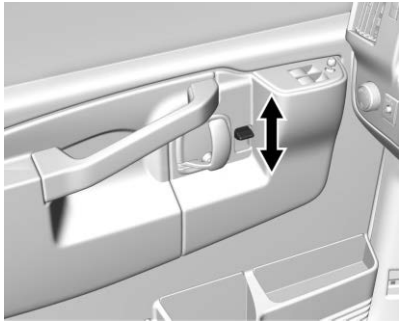

To lock the door from the inside, slide the manual lever on the door down. To unlock the door, slide the manual lever up.

From the outside, use the key.

If the vehicle is equipped with Keyless Entry, see *Remote Keyless Entry (RKE) System Operation* ⇨ *26*.

Power Door Locks

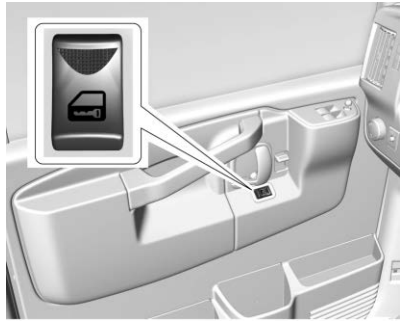

If equipped, press to lock or unlock the doors.

When a door is locked, the inside door handle will not work.

Cargo Door Relocking

If the cargo door is open when the lock button is pressed on the door or the RKE transmitter, all doors will lock except the cargo door. The cargo door will lock immediately when it is closed or when the delayed locking feature functions.

Delayed Locking

When locking the doors with the power lock switch and a door open, the doors will lock five seconds after the last door is closed. The horn chirps to signal that the delayed locking feature is in use.

Pressing or on the RKE transmitter will override the delayed locking feature and immediately lock all the doors.

This feature will not operate if the key is in the ignition.

This feature can be programmed using the Driver Information Center (DIC). See “DELAY DOOR LOCK” in *Vehicle Personalization* ⇨ *116*.

Automatic Door Locks

The vehicle may have an automatic lock/unlock feature. This feature can be programmed using the Driver Information Center (DIC). See *Vehicle Personalization* ⇨ *116*.

Lockout Protection

This feature protects you from locking the key in the vehicle when the key is in the ignition and a door is open.

If the power lock switch is pressed when either the driver, passenger, or rear door is open, all the doors will lock and then the driver door will unlock. This feature does not include the side cargo door.

If the vehicle has an ambulance package, this feature is disabled.

Safety Locks

Security locks are located on the front portion of the 60/40 side swing-out door or the side sliding door.

60/40 Swing-Out Side Door — Driver Side Shown, Passenger Side Similar

For the 60/40 side swing-out door, move the button to the right for the driver side door or to the left for the passenger side door to engage the security feature.

Move the button to the left for the driver side door or to the right for the passenger side door to return the door locks to normal operation.

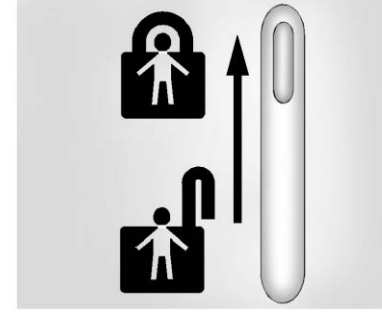

Side Sliding Door

For the side sliding door, move the button up to engage the security feature. Move the button down to return the door locks to normal operation.

Doors

Side Door (60/40 Swing-Out)

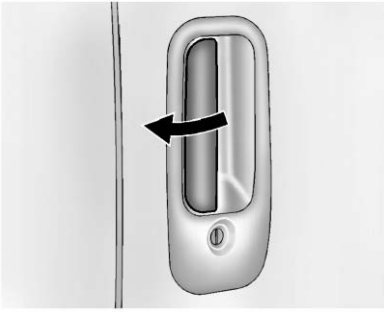

To open the front portion of a 60/40 door from the outside, pull out on the handle and open the door.

To open the front portion of a 60/40 door from the inside, pull the handle toward you and push the door open.

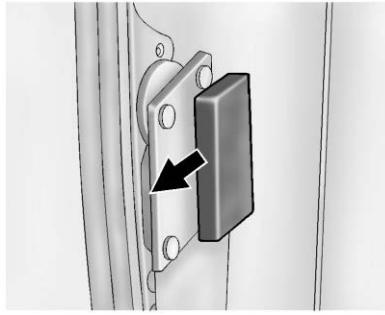

To open the rear portion of a 60/40 door from the outside, pull the handle on the side of the rear door and pull the door toward you.

To close the 60/40 side doors, close the rear door first. Then close the front door. Check to make sure that both doors are completely closed.

The swing-out doors have a check strap assembly in the door frame to keep the door from opening beyond 90 degrees.

To open the door beyond 90 degrees, close the door partially, pull the check strap toward you and then open the door. When the door is closed, the check strap will automatically re-engage.

Sliding Door

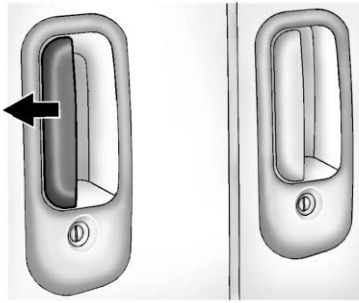

To open the sliding side door from the outside, pull the handle toward the rear of the vehicle and slide the door open.

To close the sliding side door from the outside, use the handle to slide the door toward the front of the vehicle.

When the door is closed, it will be flush with the side of the body.

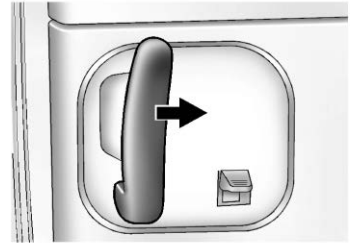

To open the sliding side door from the inside, pull the handle toward the rear of the vehicle. Then, slide the door toward the rear of the vehicle.

To close the sliding side door from the inside, grasp the handle and slide the door toward the front of the vehicle.

Make sure the door is completely closed before driving away.

Rear Doors

⚠ Warning

Unlocked doors can be dangerous.

- Passengers, especially children, can easily open the doors and fall out of a moving vehicle. The doors can be unlocked and opened while the vehicle is moving. The chance of being thrown out of the vehicle in a crash is increased if the doors are not locked. So, all passengers should wear seat belts properly and the doors should be locked whenever the vehicle is driven.
- Young children who get into unlocked vehicles may be unable to get out. A child can be overcome by extreme heat and can suffer

(Continued)

Warning (Continued)

permanent injuries or even death from heat stroke. Always lock the vehicle whenever leaving it.

- Outsiders can easily enter through an unlocked door when you slow down or stop the vehicle. Locking the doors can help prevent this from happening.

To open the rear doors from the outside, pull the handle toward you to open the passenger side rear door first.

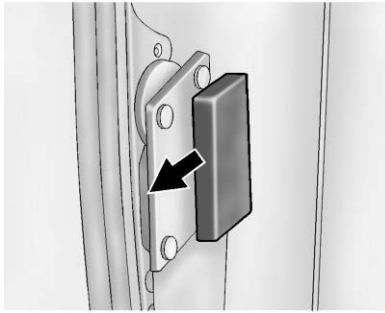

To open the driver side rear door, pull the latch release at the inside edge of the door.

To close the rear doors, close the driver side rear door first. Then close the passenger side rear door. Check to make sure both doors are completely closed.

Vehicle Security

This vehicle has theft-deterrent features; however, they do not make the vehicle impossible to steal.

Immobilizer

See *Radio Frequency Statement* ⇨ *328*.

Immobilizer Operation

This vehicle is equipped with the PASS-Key® III+ (Personalized Automotive Security System) theft-deterrent system. PASS-Key III + is a passive theft deterrent system.

The system is automatically armed when the key is removed from the ignition.

You do not have to manually arm or disarm the system.

The security light will come on if there is a problem with arming or disarming the theft-deterrent system.

If the engine does not start and the security light comes on, the key may have a damaged transponder. Turn the ignition off and try again.

If the engine still does not start, and the key appears to be undamaged, try another ignition key. If the engine still does not start with the other key, the vehicle needs service. If the vehicle does start, the first key may be faulty. See your dealer or a locksmith who can service the PASS-Key III+ to have a new key made.

It is possible for the PASS-Key III+ decoder to learn the transponder value of a new or replacement key. Up to eight keys may be programmed for the vehicle. This procedure is for learning additional keys only. If all the currently programmed keys are lost or do not operate, you must see your dealer or a locksmith who can service PASS-Key III+ to have keys made and programmed to the system.

See your dealer or a locksmith who can service PASS-Key III+ to get a new key blank that is cut exactly as the ignition key that operates the system.

To program the new key:

1. Verify the new key has ⊕ stamped on it.
2. Insert the original, already programmed key into the ignition lock cylinder and start the engine. If the engine will not start, see your dealer for service.
3. After the engine has started, turn the ignition off and remove the key.
4. Insert the key to be programmed and turn the ignition on within 10 seconds of removing the previous key.

   The security message will turn off once the key has been programmed. It may not be apparent that the security message went on due to how quickly the key is programmed.
5. Repeat Steps 1–4 if additional keys are to be programmed.

If you lose or damage a PASS-Key III+ key, see your dealer or a locksmith who can service PASS-Key III+ to have a new key made.

Do not leave the key or device that disarms or deactivates the theft-deterrent system in the vehicle.

Exterior Mirrors

Convex Mirrors

⚠ Warning

A convex mirror can make things, like other vehicles, look farther away than they really are. If you cut too sharply into the right lane, you could hit a vehicle on the right. Check the inside mirror or glance over your shoulder before changing lanes.

The passenger side mirror is convex shaped. A convex mirror's surface is curved so more can be seen from the driver seat.

Manual Mirrors

Adjust the mirrors by moving the mirror up and down and left and right.

The mirrors can be manually folded in or out.

On the lower portion of each mirror is an auxiliary convex mirror.
A convex mirror's surface is curved so you can see more from the driver seat. The auxiliary convex mirrors can be adjusted manually by moving the mirror.

Trailer-Tow Mirrors

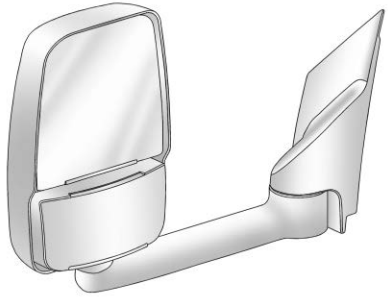

Vehicles with towing mirrors can be adjusted manually for a clear view of the objects behind you.

On the lower portion of each mirror there is an auxiliary convex mirror that can be adjusted manually to provide an extended field of view.

The mirrors can be manually folded in or out.

Power Mirrors

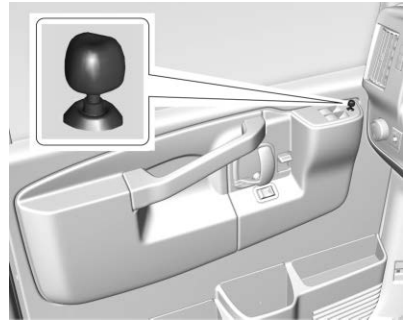

If equipped with power mirrors, select each mirror by turning the knob clockwise for the passenger side mirror or counterclockwise for the driver side mirror. The center position is neutral.

Adjust the mirror angle by moving the knob in the desired direction. The auxiliary convex mirrors can only be adjusted manually.

Folding Mirrors

Manual Folding Mirrors

The mirrors can be folded inward toward the vehicle to prevent damage when going through an automatic car wash. Push the mirror outward to return it to the original position.

Side Blind Zone Alert

The vehicle may have Side Blind Zone Alert. See *Side Blind Zone Alert (SBZA)* ⇨ *195*.

Heated Mirrors

For vehicles with heated mirrors:

: Press to heat the mirrors.

An indicator light in the button lights when the outside heated mirrors are activated.

See “Rear Window Defogger” under *Climate Control Systems* ⇨ *156*.

Interior Mirrors

Interior Rearview Mirrors

Adjust the rearview mirror for a clear view of the area behind the vehicle.

Do not spray glass cleaner directly on the mirror. Use a soft towel dampened with water.

Backup Video Manual Mirror

If equipped, this manual dimming mirror provides a camera view of the area behind the vehicle. The video display feature comes on when the vehicle is shifted in R (Reverse), and turns off when the vehicle is shifted out of R (Reverse).

Troubleshooting

If the vehicle is in R (Reverse) and a blue screen is displayed in the mirror and then the display shuts off, see your dealer for service.

See *Rear Vision Camera (RVC)* ⇨ *193*.

Manual Rearview Mirror

Push the tab forward for daytime use and pull it rearward for nighttime use to avoid glare of the headlamps from behind.

Cargo vans without rear door glass may not have an inside rearview mirror.

Backup Video Manual Mirror

If equipped, this manual dimming mirror provides a camera view of the area behind the vehicle. The video display feature comes on when the vehicle is shifted in R (Reverse), and turns off when the vehicle is shifted out of R (Reverse).

Troubleshooting

If the vehicle is in R (Reverse) and a blue screen is displayed in the mirror and then the display shuts off, see your dealer for service.

Windows

⚠ Warning

Never leave a child, a helpless adult, or a pet alone in a vehicle, especially with the windows closed in warm or hot weather. They can be overcome by the extreme heat and suffer permanent injuries or even death from heat stroke.

Manual Windows

Operate the manual windows by turning the hand crank on each door to raise or lower the side door windows.

Power Windows

⚠ Warning

Children could be seriously injured or killed if caught in the path of a closing window. Never leave keys in a vehicle with children. See *Keys* ⇨ *24*.

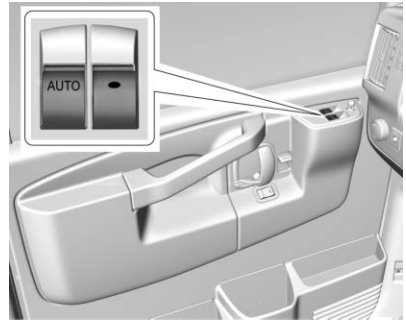

If equipped, power windows work when the ignition is on, in ACC/ACCESSORY, or when Retained Accessory Power (RAP) is active. See *Retained Accessory Power (RAP)* ⇨ *177*.

Using the window switch, press to open or pull to close the window.

The windows may be temporarily disabled if they are used repeatedly within a short time.

Express-Down

The driver window switch has an express-down feature that allows the window to be lowered without holding the switch. Press fully and release the switch marked AUTO to activate the express-down mode. This mode can be canceled at any time by pulling up on the switch. To open the window part way, lightly tap the switch until the window is at the desired position.

Swing-Out Windows

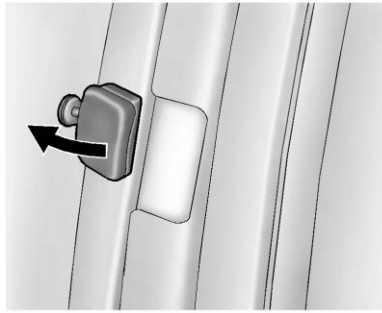

Side Swing-Out Window

To open the side door swing-out window, pull up on the latch at the edge of the window. Swing the window out and push down on the latch to lock the window into place.

To close the window, pull the latch toward you and push down on the latch to lock it.

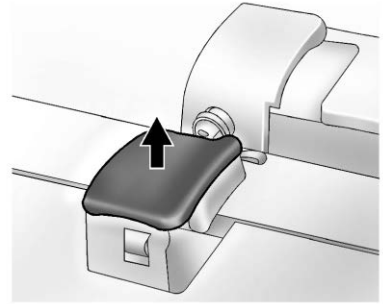

Rear Swing-Out Windows

The vehicle also has rear swing-out windows. The rear swing-out windows work the same way as the side swing-out window, but the latch is located at the bottom edge of the window.

Enhanced Technology Glass

The vehicle may be equipped with Enhanced Technology Glass (ETG). ETG is part of the overall occupant protection system on passenger and crew vans. ETG may help keep passengers sitting next to these fixed windows from being ejected through the glass in some, but not all crashes. Even with this glass, seat belts must still be worn at all times. For passenger and crew vans, use only ETG glass approved for the vehicle for replacement when damaged.

The following table shows laminated glass location, based on vehicle model and options.

Vehicle Configuration	ETG Locations
Passenger Vans with five or more seating positions	Sliding door forward window (if equipped) and rear-most side windows
Long Wheelbase Cargo Vans	Rear-most side windows
Crew Vans	Sliding door forward window (if equipped) and rear-most side windows.

Rear Windows

Rear Side Door Windows (Cargo Van Only)

⚠ Warning

The vehicle may have a partition behind the front seats or vertical metal panels on the inside of the rear side door windows. These are part of the occupant protection system. Do not remove them.

Sun Visors

To block out glare, swing down the sun visors. You can also swing them to the side.

Visor Vanity Mirror

The vehicle may have visor vanity mirrors, with or without lamps. Lift the mirror cover to turn the lamps on, if equipped.

Seats and Restraints

Head Restraints
Head Restraints 42

Front Seats
Seat Adjustment 42
Power Seat Adjustment 42
Reclining Seatbacks 43

Rear Seats
Rear Seats 44

Seat Belts
Seat Belts 47
How to Wear Seat Belts Properly 48
Lap-Shoulder Belt 49
Seat Belt Use During Pregnancy 54
Seat Belt Extender 55
Safety System Check 55
Seat Belt Care 55
Replacing Seat Belt System Parts after a Crash 55

Airbag System
Airbag System 56
Where Are the Airbags? 58
When Should an Airbag Inflate? 60
What Makes an Airbag Inflate? 61
How Does an Airbag Restrain? 61
What Will You See after an Airbag Inflates? 62
Airbag On-Off Switch 63
Servicing the Airbag-Equipped Vehicle 66
Adding Equipment to the Airbag-Equipped Vehicle 67
Airbag System Check 67
Replacing Airbag System Parts after a Crash 67

Child Restraints
Older Children 68
Infants and Young Children 70
Child Restraint Systems 72
Where to Put the Restraint 74
Lower Anchors and Tethers for Children (LATCH System) 75
Replacing LATCH System Parts After a Crash 81
Securing Child Restraints (With the Seat Belt in the Rear Seat) 82
Securing Child Restraints (With the Seat Belt in the Front Seat) 84

Head Restraints

On vehicles with factory installed seats, the front seats have built-in head restraints that are not adjustable in the outboard seating positions.

Front Seats

Seat Adjustment

⚠ Warning

You can lose control of the vehicle if you try to adjust a driver seat while the vehicle is moving. Adjust the driver seat only when the vehicle is not moving.

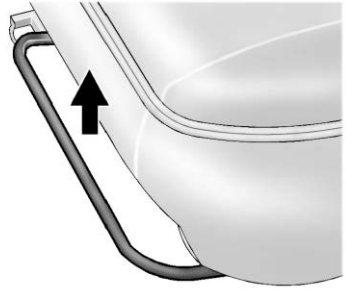

To adjust the seat:

1. Lift the bar under the front edge of the seat cushion to unlock the seat.
2. Slide the seat to the desired position and release the bar.
3. Try to move the seat back and forth to be sure the seat is locked in place.

Power Seat Adjustment

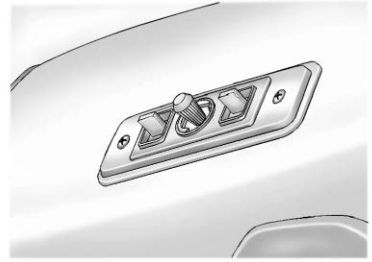

To adjust a power seat, if available, use the controls on the front of the seat:

- Move the center knob to the right or left to move the seat forward or rearward.
- Move the center knob up or down to raise or lower the seat.
- Move the right or left lever up or down to raise or lower the front or rear of the seat cushion.

Reclining Seatbacks

⚠ Warning

If either seatback is not locked, it could move forward in a sudden stop or crash. That could cause injury to the person sitting there. Always push and pull on the seatbacks to be sure they are locked.

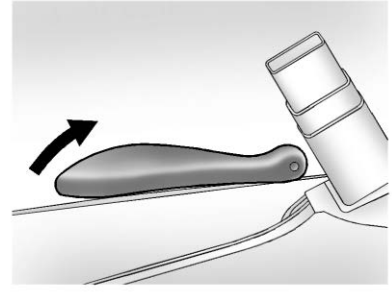

To recline the seatback:

1. Lift the lever on the inboard side of the seat.
2. Move the seatback to the desired position, and then release the lever to lock the seatback in place.
3. Push and pull on the seatback to make sure it is locked.

To return the seatback to the upright position:

1. Lift the lever fully without applying pressure to the seatback, and the seatback will return to the upright position.
2. Push and pull on the seatback to make sure it is locked.

⚠ Warning

Sitting in a reclined position when the vehicle is in motion can be dangerous. Even when buckled up, the seat belts cannot do their job.

The shoulder belt will not be against your body. Instead, it will be in front of you. In a crash, you could go into it, receiving neck or other injuries.

The lap belt could go up over your abdomen. The belt forces would be there, not at your pelvic bones. This could cause serious internal injuries.

For proper protection when the vehicle is in motion, have the seatback upright. Then sit well back in the seat and wear the seat belt properly.

Do not have a seatback reclined if the vehicle is moving.

Rear Seats

Removing the Rear Seat

Disconnect the mini-latch plates for the lap-shoulder belts on the bench seat to be removed.

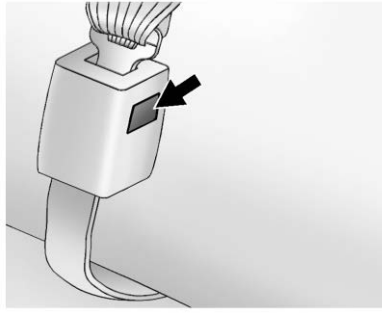

1. To do this, press the tip of a key into the release hole of the seat belt buckle while pulling up on the seat belt.
2. Locate the pins.

   On a three-passenger seat there are two pins on the inboard sides of the rear seats.

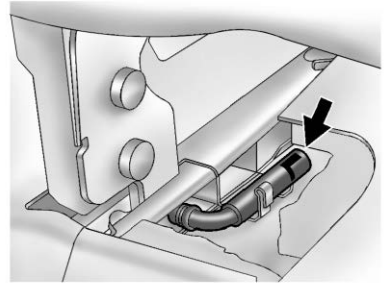

Three-Passenger Seat

The left side pin has a gray cap with a black “L” marked on it.

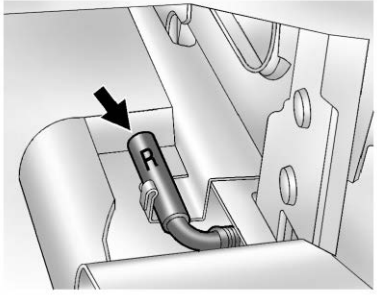

Three-Passenger Seat

The right side pin has a black cap with a white “R” marked on it.

On a four-passenger seat, each half of the seat has a set of pins. The left side has a set marked “L”, and the right side has a set marked “R”.

If the vehicle has floor mats, the pins are under a flap that has been cut into the mat.

3. Pull the pin handle up to disengage the pin from the retaining clip, and then pull the pin out.
4. Repeat this procedure for the other pins.
5. Pull the seat rearward about 5 cm (2 in), and then lift the seat from the floor rails.
6. Remove the seat from the vehicle.

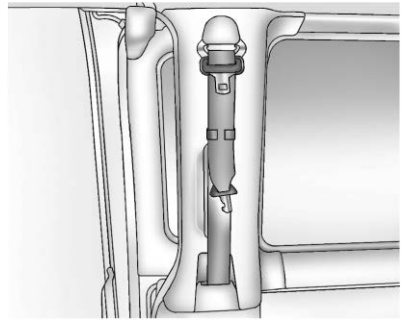

7. For the second and third row seats, stow the seat belt latch by attaching the clip on the seat belt latch to the trim just inside the side door.

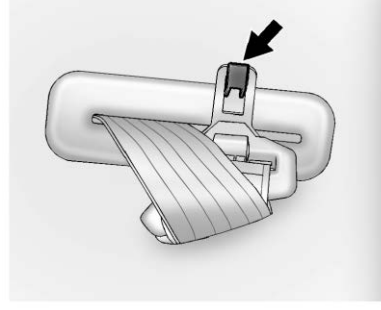

For the last row of seats, stow the seat belt latch plate on the clip at the window trim. Roll the mini-latch into the seat belt webbing and then hook the seat belt latch plate on the clip.

Reinstalling the Rear Seats

⚠ Warning

A seat that is not locked into place properly can move around in a collision or sudden stop. People in the vehicle could be

(Continued)

Warning (Continued)

injured. Be sure to lock the seat into place properly when installing it.

⚠ Warning

A seat belt that is improperly routed, not properly attached, or twisted will not provide the protection needed in a crash. The person wearing the belt could be seriously injured. After raising the rear seatback, always check to be sure that the seat belts are properly routed and attached, and are not twisted.

1. Position the seat into the open slots in both rails. Push the seat forward in the rail, hooking both seat bases onto the pins inside of the rails.
2. Locate the hole in the rail to install the locking pins at the rear of the seat base. If the vehicle has floor mats, pull the flap that has been cut into the mat.
3. Insert the locking pins into the seat base and push the seat to line up the pins with the base.

   On a three-passenger seat, the pin with the black cap marked “R” must be installed on the right side and the pin with the gray cap marked “L” must be installed on the left side.

   On a four-passenger seat, the pins marked “R” must be installed on the half of the seat on the right side. The pins marked “L” must be installed on the half of the seat on the left side.

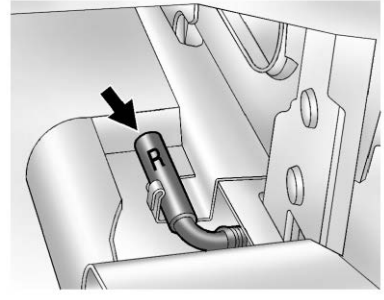

Three-Passenger Seat

4. Push the pin(s) marked “R” down until they are in the retaining clip.

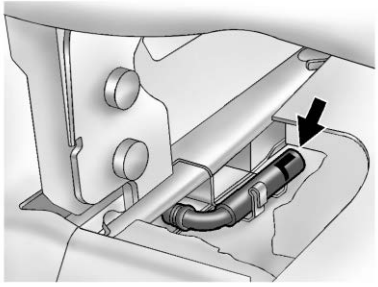

Three-Passenger Seat

5. Push the pin(s) marked “L” down until they are in the retaining clip.
6. If the vehicle has a floor mat, put the flap back to its original position.
7. Repeat this procedure for the other seat base.
8. Connect the mini-latch plates for the lap-shoulder belts by inserting the latch plates into the mini-buckles attached at the outboard positions of the bench seat. Do not twist the belts.
9. Check that all locking pins are locked into place before operating the vehicle.

Seat Belts

This section describes how to use seat belts properly, and some things not to do.

⚠ Warning

Do not let anyone ride where a seat belt cannot be worn properly. In a crash, if you or your passenger(s) are not wearing seat belts, injuries can be much worse than if you are wearing seat belts. You can be seriously injured or killed by hitting things inside the vehicle harder or by being ejected from the vehicle. In addition, anyone who is not buckled up can strike other passengers in the vehicle.

It is extremely dangerous to ride in a cargo area, inside or outside of a vehicle. In a collision, passengers riding in these areas are more likely to be seriously injured or killed. Do not allow

(Continued)

Warning (Continued)

passengers to ride in any area of the vehicle that is not equipped with seats and seat belts.

Always wear a seat belt, and check that all passenger(s) are restrained properly too.

This vehicle has indicators as a reminder to buckle the seat belts. See *Seat Belt Reminders* ⇨ *102*.

Why Seat Belts Work

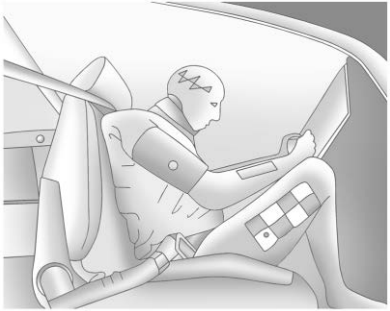

When riding in a vehicle, you travel as fast as the vehicle does. If the vehicle stops suddenly, you keep going until something stops you. It could be the windshield, the instrument panel, or the seat belts!

When you wear a seat belt, you and the vehicle slow down together. There is more time to stop because you stop over a longer distance and, when worn properly, your strongest bones take the forces from the seat belts. That is why wearing seat belts makes such good sense.

Questions and Answers About Seat Belts

Q: Will I be trapped in the vehicle after a crash if I am wearing a seat belt?

A: You *could* be — whether you are wearing a seat belt or not. Your chance of being conscious during and after a crash, so you *can* unbuckle and get out, is *much* greater if you are belted.

Q: If my vehicle has airbags, why should I have to wear seat belts?

A: Airbags are supplemental systems only. They work *with* seat belts — not instead of them. Whether or not an airbag is provided, all occupants still have to buckle up to get the most protection.

Also, in nearly all states and in all Canadian provinces, the law requires wearing seat belts.

How to Wear Seat Belts Properly

This section is only for people of adult size.

There are special things to know about seat belts and children, and there are different rules for smaller children and infants. If a child will be riding in the vehicle, see *Older Children* ⇨ *68* or *Infants and Young Children* ⇨ *70*. Follow those rules for everyone's protection.

It is very important for all occupants to buckle up. Statistics show that unbelted people are hurt more often in crashes than those who are wearing seat belts.

There are important things to know about wearing a seat belt properly.

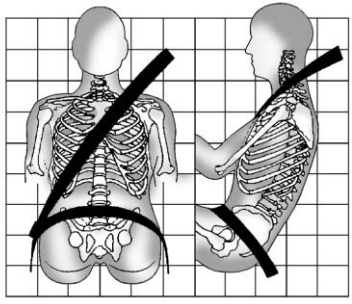

- Sit up straight and always keep your feet on the floor in front of you.
- Always use the correct buckle for your seating position.
- Wear the lap part of the belt low and snug on the hips, just touching the thighs. In a crash, this applies force to the strong pelvic bones and you would be less likely to slide under the lap belt. If you slid under it, the belt would apply force on your abdomen. This could cause serious or even fatal injuries.
- Wear the shoulder belt over the shoulder and across the chest. These parts of the body are best able to take belt restraining forces. The shoulder belt locks if there is a sudden stop or crash.

⚠ Warning

You can be seriously injured, or even killed, by not wearing your seat belt properly.

- Never allow the lap or shoulder belt to become loose or twisted.
- Never wear the shoulder belt under both arms or behind your back.
- Never route the lap or shoulder belt over an armrest.

Lap-Shoulder Belt

All seating positions in the vehicle have a lap-shoulder belt. If you are using a rear seating position with a detachable seat belt and the seat belt is not attached, see “Reinstalling the Rear Seats” under *Rear Seats* ⇨ *44* for instructions on reconnecting the seat belt to the mini-buckle.

The following instructions explain how to wear a lap-shoulder belt properly.

1. Adjust the seat, if the seat is adjustable, so you can sit up straight. To see how, see “Seats” in the Index.
2. Pick up the latch plate and pull the belt across you. Do not let it get twisted.

   The lap-shoulder belt may lock if you pull the belt across you very quickly. If this happens, let the belt go back slightly to unlock it. Then pull the belt across you more slowly.

If the shoulder portion of a passenger belt is pulled out all the way, the child restraint locking feature may be engaged. If this happens, let the belt go back all the way and start again.

3. Push the latch plate into the buckle until it clicks.

   Pull up on the latch plate to make sure it is secure. If the belt is not long enough, see *Seat Belt Extender* ⇨ *55*.

   Position the release button on the buckle so that the seat belt could be quickly unbuckled if necessary.

4. If equipped with a shoulder belt height adjuster, move it to the height that is right for you. See “Seat belt Height Adjuster” later in this section for instructions on use and important safety information.

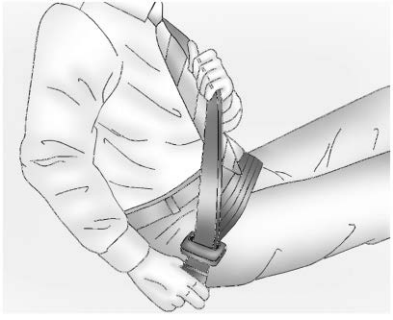

5. To make the lap part tight, pull up on the shoulder belt.

   It may be necessary to pull stitching on the seat belt through the latch plate to fully tighten the lap belt on smaller occupants.

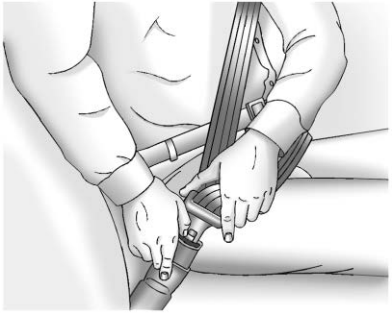

To unlatch the belt, push the button on the buckle. The belt should return to its stowed position. Slide the latch plate up the seat belt webbing when the seat belt is not in use. The latch plate should rest on the stitching on the seat belt, near the guide loop on the side wall.

Always stow the seat belt slowly. If the seat belt webbing returns quickly to the stowed position, the

retractor may lock and cannot be pulled out. If this happens, pull the seat belt straight out firmly to unlock the webbing, and then release it. If the webbing is still locked in the retractor, see your dealer.

Before a door is closed, be sure the seat belt is out of the way. If a door is slammed against a seat belt, damage can occur to both the seat belt and the vehicle.

Seat Belt Height Adjuster

The vehicle has a seat belt height adjuster for the driver and front outboard passenger positions.

Adjust the height so the shoulder portion of the belt is on the shoulder and not falling off of it. The belt should be close to, but not contacting, the neck. Improper shoulder belt height adjustment could reduce the effectiveness of the seat belt in a crash. See *How to Wear Seat Belts Properly* ⇨ *48*.

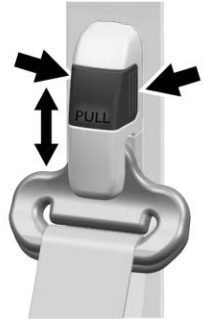

Squeeze both sides of the release button and pull outward. Then move the height adjuster up or down to the desired position and release the button.

After the adjuster is set to the desired position, try to move it up or down without squeezing the release button to make sure it has locked into position.

Seat Belt Pretensioners

If the vehicle has seat-mounted side impact airbags and roof-rail airbags, it also has seat belt pretensioners for the front outboard occupants.

Although the seat belt pretensioners cannot be seen, they are part of the seat belt assembly. They can help tighten the seat belts during the early stages of a moderate to severe frontal, near frontal, or rear crash if the threshold conditions for pretensioner activation are met. And, if the vehicle has roof-rail airbags, seat belt pretensioners can help tighten the seat belts in a side crash or a rollover event.

Pretensioners work only once. If the pretensioners activate in a crash, the pretensioners and probably other parts of the vehicle's seat belt system will need to be replaced. See *Replacing Seat Belt System Parts after a Crash* ⇨ *55*.

Do not sit on the outboard seat belt while entering or exiting the vehicle or at any time while sitting in the seat. Sitting on the seat belt can damage the webbing and hardware.

Rear Seat Belt Comfort Guides

This vehicle may have rear seat belt comfort guides. The guides may provide added seat belt comfort for older children who have outgrown booster seats and for some adults. When installed and properly adjusted, the comfort guide positions the shoulder belt away from the neck and head.

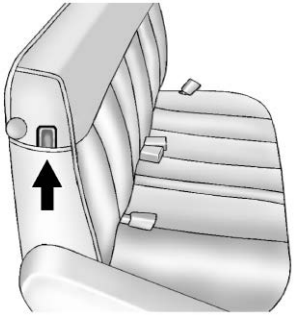

The comfort guides for the right rear outboard seating positions of three-passenger bench seats are stored in a pocket on the side of the seatback.

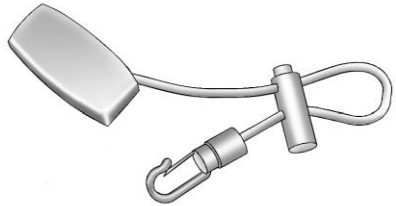

Adjustable comfort guides are available through your dealer for the left rear outboard seating positions of the three-passenger bench seats and for the outboard seating positions of the four-passenger bench seats. For these seating positions, the adjustable comfort guide attaches to a loop on the outboard side of the seatback.

Comfort Guide Installation and Removal (Pocket Style)

To install:

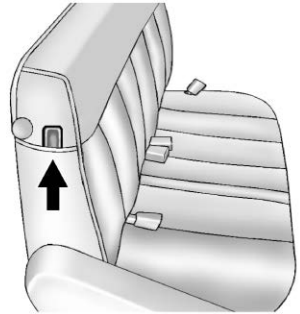

1. Locate the guide in a pocket on the side of the seatback.

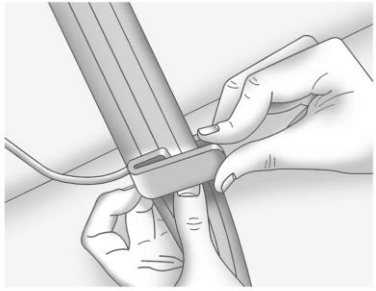

2. Place the guide over the belt, and insert the two edges of the belt into the slots of the guide.

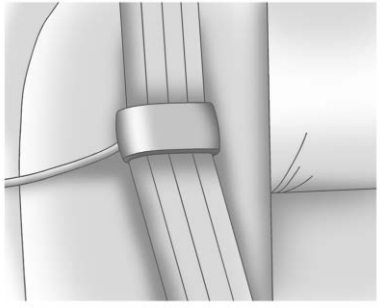

3. Be sure that the belt is not twisted and it lies flat. The elastic cord must be behind the belt with the plastic guide on the front.

⚠ Warning

A seat belt that is not properly worn may not provide the protection needed in a crash. The person wearing the belt could be seriously injured. The shoulder belt should go over the shoulder and across the chest. These parts of the body are best able to take belt restraining forces.

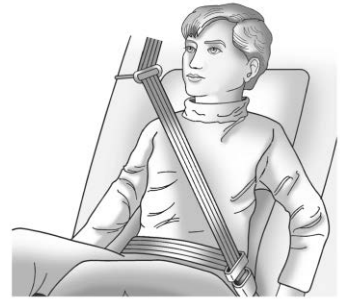

4. Buckle, position, and release the seat belt as described previously in this section. Make sure that the shoulder belt crosses the shoulder. The belt should be close to, but not contacting, the neck.

To remove and store the comfort guide, squeeze the belt edges together so that the seat belt can be removed from the guide. Slide the guide back into its storage pocket on the side of the seatback.

Comfort Guide Installation and Removal (Adjustable Style)

⚠ Warning

A seat belt that is not properly worn may not provide the protection needed in a crash. The person wearing the belt could be seriously injured. The shoulder belt should go over the shoulder and across the chest. These parts of the body are best able to take belt restraining forces.

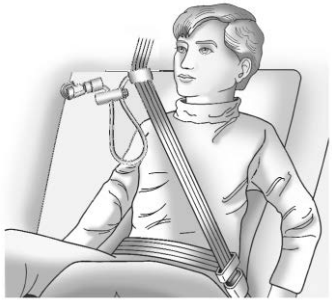

Adjustable comfort guides are available through your dealer for the left rear outboard seating positions of the three-passenger bench seats and for the outboard seating positions of the four-passenger bench seats. Instructions are included with the guides.

Seat Belt Use During Pregnancy

Seat belts work for everyone, including pregnant women. Like all occupants, they are more likely to be seriously injured if they do not wear seat belts.

A pregnant woman should wear a lap-shoulder belt, and the lap portion should be worn as low as possible, below the rounding, throughout the pregnancy.

The best way to protect the fetus is to protect the mother. When a seat belt is worn properly, it is more likely that the fetus will not be hurt in a crash. For pregnant women, as for anyone, the key to making seat belts effective is wearing them properly.

Seat Belt Extender

If the vehicle's seat belt will fasten around you, you should use it.

But if a seat belt is not long enough, your dealer will order you an extender. When you go in to order it, take the heaviest coat you will wear, so the extender will be long enough for you. To help avoid personal injury, do not let someone else use it, and use it only for the seat it is made to fit. The extender has been designed for adults. Never use it for securing child restraints. For more information on the proper use and fit of seat belt extenders see the instruction sheet that comes with the extender.

Safety System Check

Periodically check the seat belt reminder, seat belts, buckles, latch plates, retractors, shoulder belt height adjusters (if equipped), and seat belt anchorages to make sure they are all in working order. Look for any other loose or damaged seat belt system parts that might keep a seat belt system from performing properly. See your dealer to have it repaired. Torn or frayed seat belts may not protect you in a crash. They can rip apart under impact forces. If a belt is torn or frayed, have it replaced immediately.

Make sure the seat belt reminder light is working. See *Seat Belt Reminders* ⇨ *102*.

Keep seat belts clean and dry. See *Seat Belt Care* ⇨ *55*.

Seat Belt Care

Keep belts clean and dry.

⚠ Warning

Do not bleach or dye seat belt webbing. It may severely weaken the webbing. In a crash, they might not be able to provide adequate protection. Clean and rinse seat belt webbing only with mild soap and lukewarm water. Allow the webbing to dry.

Seat belts should be properly cared for and maintained.

Seat belt hardware should be kept dry and free of dust or debris. As necessary exterior hard surfaces and seat belt webbing may be lightly cleaned with mild soap and water. Ensure there is not excessive dust or debris in the mechanism. If dust or debris exists in the system please see the dealer. Parts may need to be replaced to ensure proper functionality of the system.

Replacing Seat Belt System Parts after a Crash

⚠ Warning

A crash can damage the seat belt system in the vehicle. A damaged seat belt system may not properly protect the person using it, resulting in serious injury or even death in a crash. To help make sure the seat belt systems are

(Continued)

Warning (Continued)

working properly after a crash, have them inspected and any necessary replacements made as soon as possible.

After a minor crash, replacement of seat belts may not be necessary. But the seat belt assemblies that were used during any crash may have been stressed or damaged. See your dealer to have the seat belt assemblies inspected or replaced.

New parts and repairs may be necessary even if the seat belt system was not being used at the time of the crash.

Have the seat belt pretensioners checked if the vehicle has been in a crash, or if the airbag readiness light stays on after you start the vehicle or while you are driving. See *Airbag Readiness Light* ⇨ *102*.

Airbag System

The vehicle has the following airbag:

- A frontal airbag for the driver

The vehicle may have the following airbags:

- A frontal airbag for the front outboard passenger
- A seat-mounted side impact airbag for the driver
- A seat-mounted side impact airbag for the front outboard passenger

  Seat-mounted side impact airbags are only available on vehicles equipped with roof-rail airbags.
- A roof-rail airbag for the driver on vans with single row seating
- A roof-rail airbag for the front outboard passenger on vans with single row seating
- A roof-rail airbag for the driver and the passenger seated directly behind the driver on vans with two row seating
- A roof-rail airbag for the front outboard passenger and the passenger seated directly behind the front outboard passenger on vans with two row seating

  If the van is equipped with a sliding door, the roof-rail airbag for the front outboard passenger is separate from the roof-rail airbag for the passenger seated directly behind the front outboard passenger. If the van is equipped with a 60/40 swing-out door, a single roof-rail airbag covers both seating positions.
- A roof-rail airbag for the driver and the second and third row passengers seated directly behind the driver on vans with three or more seating rows

- A roof-rail airbag for the front outboard passenger and the second and third row passengers seated directly behind the front outboard passenger on vans with three or more seating rows

  If the van is equipped with a sliding door, the roof-rail airbag for the front outboard passenger is separate from the roof-rail airbag for the second and third row passengers seated directly behind the front outboard passenger. If the van is equipped with a 60/40 swing-out door, a single roof-rail airbag covers all three seating positions.

Additionally:

- Vehicles that have a raised or modified roof — such as school buses, ambulances, vehicles with adaptive equipment for mobility, and recreational vehicles — may or may not be equipped with roof-rail airbags.
- Vehicles with a GVWR above 4 536 kg (10,000 lb) are not equipped with roof-rail airbags.

All vehicle airbags have the word AIRBAG on the trim or on an attached label near the deployment opening.

For frontal airbags, the word AIRBAG is on the center of the steering wheel for the driver and on the instrument panel for the front outboard passenger.

For seat-mounted side impact airbags, the word AIRBAG is on the side of the seatback closest to the door.

For roof-rail airbags, the word AIRBAG is on the ceiling or trim.

Airbags are designed to supplement the protection provided by seat belts. Even though today's airbags are also designed to help reduce the risk of injury from the force of an inflating airbag, all airbags must inflate very quickly to do their job.

Here are the most important things to know about the airbag system:

⚠ Warning

You can be severely injured or killed in a crash if you are not wearing your seat belt, even with airbags. Airbags are designed to work with seat belts, not replace them. Also, airbags are not designed to inflate in every crash. In some crashes seat belts are the only restraint. See *When Should an Airbag Inflate?* ⇨ *60*.

Wearing your seat belt during a crash helps reduce your chance of hitting things inside the vehicle or being ejected from it. Airbags are "supplemental restraints" to the seat belts. Everyone in the vehicle should wear a seat belt properly, whether or not there is an airbag for that person.

⚠ Warning

Because airbags inflate with great force and faster than the blink of an eye, anyone who is up against, or very close to, any airbag when it inflates can be seriously injured or killed. Do not sit unnecessarily close to any airbag, as you would be if sitting on the edge of the seat or leaning forward. Seat belts help keep you in position before and during a crash. Always wear a seat belt, even with airbags. The driver should sit as far back as possible while still maintaining control of the vehicle. The seat belts and the front outboard passenger airbags are most effective when you are sitting well back and upright in the seat with both feet on the floor.

(Continued)

Warning (Continued)

Occupants should not lean on or sleep against the door or side windows in seating positions with seat-mounted side impact airbags and/or roof-rail airbags.

⚠ Warning

Children who are up against, or very close to, any airbag when it inflates can be seriously injured or killed. Always secure children properly in the vehicle. To read how, see *Older Children* ⇨ *68* or *Infants and Young Children* ⇨ *70*.

There is an airbag readiness light on the instrument panel, which shows the airbag symbol.

The system checks the airbag electrical system for malfunctions. The light tells you if there is an electrical problem. See *Airbag Readiness Light* ⇨ *102*.

Where Are the Airbags?

The driver frontal airbag is in the center of the steering wheel.

If the vehicle has a front outboard passenger frontal airbag, it is in the passenger side instrument panel.

Driver Side Shown, Passenger Side Similar

If the vehicle has seat-mounted side impact airbags for the driver and front outboard passenger, they are in the sides of the seatbacks closest to the door.

Driver Side Shown, Passenger Side Similar

If the vehicle has a single seating row and it has roof-rail airbags for the driver and front outboard passenger, the roof-rail airbags are in the ceiling above the side windows.

Driver Side Shown, Passenger Side Similar

If the vehicle has two seating rows, roof-rail airbags for the driver, front outboard passenger, and second row outboard passengers are in the ceiling above the side windows.
If the vehicle has three or more seating rows, roof-rail airbags for the driver, front outboard passenger, and second and third row outboard passengers are in the ceiling above the side windows.

⚠ Warning

If something is between an occupant and an airbag, the airbag might not inflate properly or it might force the object into that person causing severe injury or even death. The path of an inflating airbag must be kept clear. Do not put anything between an occupant and an airbag, and do not attach or put anything on the steering wheel hub or on or near any other airbag covering.

Do not use seat accessories that block the inflation path of a seat-mounted side impact airbag.

Never secure anything to the roof of a vehicle with roof-rail airbags by routing a rope or tie-down through any door or window opening. If you do, the path of an inflating roof-rail airbag will be blocked.

When Should an Airbag Inflate?

This vehicle is equipped with one or more airbags. See *Airbag System* ⇨ *56*. Airbags are designed to inflate if the impact exceeds the specific airbag system's deployment threshold. Deployment thresholds are used to predict how severe a crash is likely to be in time for the airbags to inflate and help restrain the occupants. The vehicle has electronic sensors which help the airbag system determine the severity of the impact. Deployment thresholds can vary with specific vehicle design.

Frontal airbags are designed to inflate in moderate to severe frontal or near-frontal crashes to help reduce the potential for severe injuries mainly to the driver or front outboard passenger head and chest.

Whether the frontal airbags will or should deploy is not based primarily on how fast the vehicle is traveling.

It depends largely on what you hit, the direction of the impact, and how quickly the vehicle slows down.

Frontal airbags may inflate at different crash speeds depending on whether the vehicle hits an object straight on or at an angle, and whether the object is fixed or moving, rigid or deformable, narrow or wide.

Frontal airbags are not intended to inflate during vehicle rollovers, rear impacts, or in many side impacts.

Seat-mounted side impact airbags, if equipped, are designed to inflate in moderate to severe side crashes depending on the location of the impact. Seat-mounted side impact airbags are not designed to inflate in frontal impacts, near-frontal impacts, rollovers, or rear impacts.
A seat-mounted side impact airbag is intended to inflate on the side of the vehicle that is struck.

The vehicle may or may not be equipped with roof-rail airbags. Roof-rail airbags are designed to inflate in moderate to severe side crashes depending on the location of the impact. In addition, these roof-rail airbags are designed to inflate during a rollover. Roof-rail airbags are not designed to inflate in frontal, near-frontal, or rear impacts. All roof-rail airbags will inflate when either side of the vehicle is struck or if the sensing system predicts that the vehicle is about to roll over on its side.

In any particular crash, no one can say whether an airbag should have inflated simply because of the vehicle damage or repair costs.

What Makes an Airbag Inflate?

In a deployment event, the sensing system sends an electrical signal triggering a release of gas from the inflator. Gas from the inflator fills the airbag causing the bag to break out of the cover. The inflator, the airbag, and related hardware are all part of the airbag module.

For airbag locations, see *Where Are the Airbags?* ⇨ *58*.

How Does an Airbag Restrain?

In moderate to severe frontal or near frontal collisions, even belted occupants can contact the steering wheel or the instrument panel. In moderate to severe side collisions, even belted occupants can contact the inside of the vehicle.

Airbags supplement the protection provided by seat belts by distributing the force of the impact more evenly over the occupant's body.

Rollover capable roof-rail airbags are designed to help contain the head and chest of occupants in the outboard seating positions in the first, second, and third rows, if equipped. The rollover capable roof-rail airbags are designed to help reduce the risk of full or partial ejection in rollover events, although no system can prevent all such ejections.

But airbags would not help in many types of collisions, primarily because the occupant's motion is

not toward those airbags. See *When Should an Airbag Inflate?* ⇨ *60*.

Airbags should never be regarded as anything more than a supplement to seat belts.

What Will You See after an Airbag Inflates?

After frontal and seat-mounted side impact airbags (if equipped) inflate, they quickly deflate, so quickly that some people may not even realize the airbags inflated. Roof-rail airbags (if equipped) may still be at least partially inflated for some time after they inflate. Some components of the airbag module may be hot for several minutes. For location of the airbags, see *Where Are the Airbags?* ⇨ *58*.

The parts of the airbag that come into contact with you may be warm, but not too hot to touch. There may be some smoke and dust coming from the vents in the deflated airbags. Airbag inflation does not prevent the driver from seeing out of the windshield or being able to steer the vehicle, nor does it prevent people from leaving the vehicle.

⚠ Warning

When an airbag inflates, there may be dust in the air. This dust could cause breathing problems for people with a history of asthma or other breathing trouble. To avoid this, everyone in the vehicle should get out as soon as it is safe to do so. If you have breathing problems but cannot get out of the vehicle after an airbag inflates, then get fresh air by opening a window or a door. If you experience breathing problems following an airbag deployment, you should seek medical attention.

The vehicle has a feature that may automatically unlock the doors (if equipped with power door locks), turn on the interior lamps and hazard warning flashers, and shut off the fuel system after the airbags inflate. The feature may also activate, without airbag inflation, after an event that exceeds a predetermined threshold. After turning the ignition off and then on again, the fuel system will return to normal operation; the doors can be locked, the interior lamps can be turned off, and the hazard warning flashers can be turned off using the controls for those features. If any of these systems are damaged in the crash they may not operate as normal.

⚠ Warning

A crash severe enough to inflate the airbags may have also damaged important functions in the vehicle, such as the fuel system, brake and steering systems, etc. Even if the vehicle appears to be drivable after a moderate crash, there may be concealed damage that could make it difficult to safely operate the vehicle.

(Continued)

Warning (Continued)

Use caution if you should attempt to restart the engine after a crash has occurred.

In many crashes severe enough to inflate the airbag, windshields are broken by vehicle deformation. Additional windshield breakage may also occur from the front outboard passenger airbag.

- Airbags are designed to inflate only once. After an airbag inflates, you will need some new parts for the airbag system. If you do not get them, the airbag system will not be there to help protect you in another crash. A new system will include airbag modules and possibly other parts. The service manual for the vehicle covers the need to replace other parts.
- The vehicle has a crash sensing and diagnostic module which records information after a crash. See *Vehicle Data Recording and Privacy* ⇨ *330* and *Event Data Recorders* ⇨ *330*.
- Let only qualified technicians work on the airbag systems. Improper service can mean that an airbag system will not work properly. See your dealer for service.

Airbag On-Off Switch

If the instrument panel has one of the switches pictured in the following illustrations, the vehicle has an airbag on-off switch that you can use to manually turn on or off the front outboard passenger airbag. No other airbag is affected by the airbag on-off switch.

United States

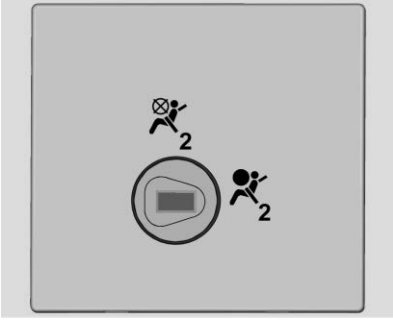

Canada and Mexico

This switch should only be turned to the off position if the person in the front outboard passenger position is a member of a passenger risk group identified by the national government as follows:

Infant. An infant (less than 1 year old) must ride in the front seat because:

- *My vehicle has no rear seat;*
- *My vehicle has a rear seat too small to accommodate a rear-facing infant seat; or*
- *The infant has a medical condition which, according to the infant's physician, makes it necessary for the infant to ride in the front seat so that the driver can constantly monitor the child's condition.*

Child age 1 to 12. A child age 1 to 12 must ride in the front seat because:

- *My vehicle has no rear seat;*
- *Although children ages 1 to 12 ride in the rear seat(s) whenever possible, children ages 1 to 12 sometimes must ride in the front because no space is available in the rear seat(s) of my vehicle; or*
- *The child has a medical condition which, according to the child's physician, makes it necessary for the child to ride in the front seat so that the driver can constantly monitor the child's condition.*

Medical Condition. A passenger has a medical condition which, according to his or her physician:

- *Causes the passenger airbag to pose a special risk for the passenger; and*
- *Makes the potential harm from the passenger airbag in a crash greater than the potential harm from turning off the airbag and allowing the passenger, even if belted, to hit the instrument panel or windshield in a crash.*

⚠ Warning

If the front outboard passenger frontal airbag is turned off for a person who is not in a risk group identified by the national government, that person will not have the extra protection of an airbag. In a crash, the airbag will not be able to inflate and help protect the person sitting there. Do not turn off the front outboard

(Continued)

Warning (Continued)

passenger frontal airbag unless the person sitting there is in a risk group.

United States

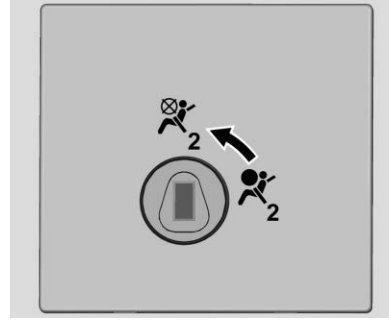

Canada and Mexico

To turn off the front outboard passenger frontal airbag, insert the ignition key into the switch, push in, and move the switch to the off position.

The airbag off light will come on and stay on to let you know the front outboard passenger airbag is off. See *Airbag On-Off Light* ⇨ *103*. The front outboard passenger airbag will remain off until you turn it back on again.

⚠ Warning

If the airbag readiness light ever comes on and stays on, it means that something may be wrong with the airbag system. For example, the front outboard passenger frontal airbag could inflate even though the airbag on-off switch is turned off.

To help avoid injury to yourself or others, have the vehicle serviced right away. See *Airbag Readiness Light* ⇨ *102* for more information, including important safety information.

United States

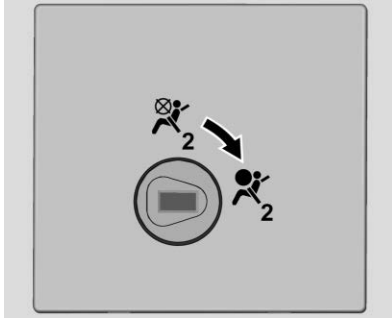

Canada and Mexico

To turn the front outboard passenger airbag on again, insert the ignition key into the switch, push in, and move the switch to the on position.

The front outboard passenger frontal airbag is now enabled, and may inflate. See *Airbag On-Off Light* ⇨ *103*.

Servicing the Airbag-Equipped Vehicle

Airbags affect how the vehicle should be serviced. There are parts of the airbag system in several places around the vehicle. Your dealer and the service manual have information about servicing the vehicle and the airbag system. To purchase a service manual, see *Service Publications Ordering Information* ⇨ *327*.

⚠ Warning

For up to 10 seconds after the vehicle is turned off and the battery is disconnected, an airbag can still inflate during improper service. You can be injured if you are close to an airbag when it inflates. Avoid yellow connectors. They are probably part of the airbag system. Be sure to follow proper service procedures, and make sure the person performing work for you is qualified to do so.

Adding Equipment to the Airbag-Equipped Vehicle

Adding accessories that change the vehicle's frame, bumper system, height, front end, or side sheet metal may keep the airbag system from working properly.

The operation of the airbag system can also be affected by changing any parts of the front seats, seat belts, airbag sensing and diagnostic module, steering wheel, instrument panel, inner door seals including the speakers, any of the airbag modules, ceiling or pillar garnish trim, front sensors, or airbag wiring.

Your dealer and the service manual have information about the location of the airbag sensors, sensing and diagnostic module, and airbag wiring.

If the vehicle has rollover roof-rail airbags, see *Different Size Tires and Wheels* ⇨ *273* for additional important information.

If you have to modify your vehicle because you have a disability and you have questions about whether the modifications will affect the vehicle's airbag system, or if you have questions about whether the airbag system will be affected if the vehicle is modified for any other reason, call Customer Assistance. See *Customer Assistance Offices* ⇨ *320*.

Airbag System Check

The airbag system does not need regularly scheduled maintenance or replacement. Make sure the airbag readiness light is working. See *Airbag Readiness Light* ⇨ *102*.

Caution

If an airbag covering is damaged, opened, or broken, the airbag may not work properly. Do not open or break the airbag coverings. If there are any opened or broken airbag

(Continued)

Caution (Continued)

coverings, have the airbag covering and/or airbag module replaced. For the location of the airbags, see *Where Are the Airbags?* ⇨ *58*. See your dealer for service.

Replacing Airbag System Parts after a Crash

⚠ Warning

A crash can damage the airbag systems in the vehicle.
A damaged airbag system may not properly protect you and your passenger(s) in a crash, resulting in serious injury or even death. To help make sure the airbag systems are working properly after a crash, have them inspected and any necessary replacements made as soon as possible.

If an airbag inflates, you will need to replace airbag system parts. See your dealer for service.

If the airbag readiness light stays on after the vehicle is started or comes on when you are driving, the airbag system may not work properly. Have the vehicle serviced right away. See *Airbag Readiness Light* ⇨ *102*.

Child Restraints

Older Children

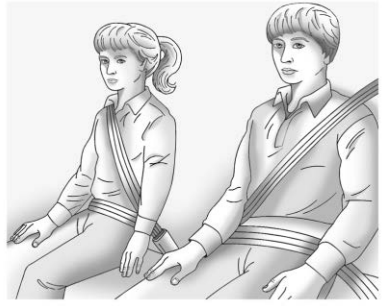

Older children who have outgrown booster seats should wear the vehicle's seat belts.

The manufacturer instructions that come with the booster seat state the weight and height limitations for that booster. Use a booster seat with a lap-shoulder belt until the child passes the fit test below:

- Sit all the way back on the seat. Do the knees bend at the seat edge? If yes, continue. If no, return to the booster seat.
- Buckle the lap-shoulder belt. Does the shoulder belt rest on the shoulder? If yes, continue. If no, try using the rear seat belt comfort guide, if available. See "Rear Seat Belt Comfort Guides" under *Lap-Shoulder Belt* ⇨ *49*. If a comfort guide is not available, or if the shoulder belt still does not rest on the shoulder, then return to the booster seat.
- Does the lap belt fit low and snug on the hips, touching the thighs? If yes, continue. If no, return to the booster seat.

- Can proper seat belt fit be maintained for the length of the trip? If yes, continue. If no, return to the booster seat.

Q: What is the proper way to wear seat belts?

A: An older child should wear a lap-shoulder belt and get the additional restraint a shoulder belt can provide. The shoulder belt should not cross the face or neck. The lap belt should fit snugly below the hips, just touching the top of the thighs. This applies belt force to the child's pelvic bones in a crash. It should never be worn over the abdomen, which could cause severe or even fatal internal injuries in a crash.

Also see “Rear Seat Belt Comfort Guides” under *Lap-Shoulder Belt* ⇨ *49*.

According to accident statistics, children are safer when properly restrained in a rear seating position. In a crash, children who are not buckled up can strike other people who are buckled up, or can be thrown out of the vehicle. Older children need to use seat belts properly.

⚠ Warning

Never allow more than one child to wear the same seat belt. The seat belt cannot properly spread the impact forces. In a crash, they can be crushed together and seriously injured. A seat belt must be used by only one person at a time.

⚠ Warning

Never allow a child to wear the seat belt with the shoulder belt behind their back. A child can be seriously injured by not wearing the lap-shoulder belt properly. In a crash, the child would not be restrained by the shoulder belt. The child could move too far forward increasing the chance of head and neck injury. The child might also slide under the lap belt. The belt force would then be applied right on the abdomen.

(Continued)

Warning (Continued)

That could cause serious or fatal injuries. The shoulder belt should go over the shoulder and across the chest.

Infants and Young Children

Everyone in a vehicle needs protection! This includes infants and all other children. Neither the distance traveled nor the age and size of the traveler changes the need, for everyone, to use safety restraints. In fact, the law in every state in the United States and in every Canadian province says children up to some age must be restrained while in a vehicle.

⚠ Warning

Children can be seriously injured or strangled if a shoulder belt is wrapped around their neck. The shoulder belt can tighten but cannot be loosened if it is locked. The shoulder belt locks when it is pulled all the way out of the retractor. It unlocks when the shoulder belt is allowed to go all the way back into the retractor, but it cannot do this if it is wrapped around a child's neck. If the shoulder belt is locked and tightened around a child's neck, the only way to loosen the belt is to cut it.

(Continued)

Warning (Continued)

Never leave children unattended in a vehicle and never allow children to play with the seat belts.

Every time infants and young children ride in vehicles, they should have the protection provided by appropriate child restraints. Neither the vehicle's seat belt system nor its airbag system is designed for them.

Children who are not restrained properly can strike other people, or can be thrown out of the vehicle.

⚠ Warning

Never hold an infant or a child while riding in a vehicle. Due to crash forces, an infant or a child will become so heavy it is not possible to hold it during a crash. For example, in a crash at only 40 km/h (25 mph), a 5.5 kg (12 lb)

(Continued)

Warning (Continued)

infant will suddenly become a 110 kg (240 lb) force on a person's arms. An infant or child should be secured in an appropriate restraint.

⚠ Warning

Children who are up against, or very close to, any airbag when it inflates can be seriously injured

(Continued)

Warning (Continued)

or killed. Never put a rear-facing child restraint in the front outboard seat. Secure a rear-facing child restraint in a rear seat. It is also better to secure a forward-facing child restraint in a rear seat. If you must secure a forward-facing child restraint in the front outboard seat, always move the front passenger seat as far back as it will go.

Child restraints are devices used to restrain, seat, or position children in the vehicle and are sometimes called child seats or car seats.

There are three basic types of child restraints:

- Forward-facing child restraints
- Rearward-facing child restraints
- Belt-positioning booster seats

The proper child restraint for your child depends on their size, weight, and age, and also on whether the child restraint is compatible with the vehicle in which it will be used.

For each type of child restraint, there are many different models available. When purchasing a child restraint, be sure it is designed to be used in a motor vehicle. If it is, the restraint will have a label saying that it meets federal motor vehicle safety standards. The restraint manufacturer's instructions that come with the restraint state the weight and height limitations for a particular child restraint. In addition,

there are many kinds of restraints available for children with special needs.

⚠ Warning

To reduce the risk of neck and head injury in a crash, infants and toddlers should be secured in a rear-facing child restraint until age two, or until they reach the maximum height and weight limits of their child restraint.

⚠ Warning

A young child's hip bones are still so small that the vehicle's regular seat belt may not remain low on the hip bones, as it should. Instead, it may settle up around the child's abdomen. In a crash, the belt would apply force on a body area that is unprotected by any bony structure. This alone could cause serious or fatal

(Continued)

Warning (Continued)

injuries. To reduce the risk of serious or fatal injuries during a crash, young children should always be secured in appropriate child restraints.

Child Restraint Systems

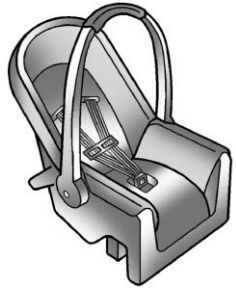

Rear-Facing Infant Restraint

A rear-facing child restraint provides restraint with the seating surface against the back of the infant.

The harness system holds the infant in place and, in a crash, acts to keep the infant positioned in the restraint.

Forward-Facing Child Restraint

A forward-facing child restraint provides restraint for the child's body with the harness.

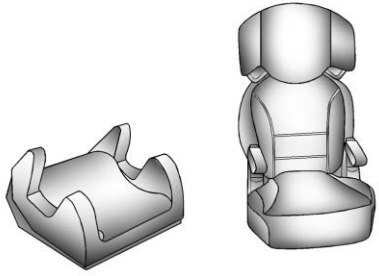

Booster Seats

A belt-positioning booster seat is used for children who have outgrown their forward-facing child restraint. Boosters are designed to improve the fit of the vehicle's seat belt system until the child is large enough for the vehicle seat belts to fit properly without a booster seat. See the seat belt fit test in *Older Children* ⇨ *68*.

Securing an Add-On Child Restraint in the Vehicle

⚠ Warning

A child can be seriously injured or killed in a crash if the child restraint is not properly secured in the vehicle. Secure the child restraint properly in the vehicle using the vehicle's seat belt or LATCH system, following the instructions that came with that child restraint and the instructions in this manual.

To help reduce the chance of injury, the child restraint must be secured in the vehicle. Child restraints must be secured in vehicle seats by lap belts or the lap belt portion of a lap-shoulder belt, or by the LATCH system. See *Lower Anchors and Tethers for Children (LATCH System)* ⇨ *75* for more information. Children can be endangered in a crash if the child restraint is not properly secured in the vehicle.

When securing an add-on child restraint, refer to the instructions that come with the restraint which may be on the restraint itself or in a booklet, or both, and to this manual. The child restraint instructions are important, so if they are not available, obtain a replacement copy from the manufacturer.

Keep in mind that an unsecured child restraint can move around in a collision or sudden stop and injure people in the vehicle. Be sure to properly secure any child restraint in the vehicle — even when no child is in it.

In some areas of the United States and Canada, Certified Child Passenger Safety Technicians (CPSTs) are available to inspect and demonstrate how to correctly use and install child restraints. In the U.S., refer to the National Highway Traffic Safety Administration (NHTSA) website to locate the nearest child safety seat inspection station. For CPST

availability in Canada, check with Transport Canada or the Provincial Ministry of Transportation office.

Securing the Child Within the Child Restraint

⚠ Warning

A child can be seriously injured or killed in a crash if the child is not properly secured in the child restraint. Secure the child properly following the instructions that came with that child restraint.

Where to Put the Restraint

According to accident statistics, children and infants are safer when properly restrained in an appropriate child restraint secured in a rear seating position.

Whenever possible, children aged 12 and under should be secured in a rear seating position.

If a child restraint is secured in the front outboard passenger seat, and the vehicle has a switch on the instrument panel to manually turn off the front outboard passenger airbag, see *Airbag On-Off Switch* ⇨ *63* and *Securing Child Restraints (With the Seat Belt in the Rear Seat)* ⇨ *82* or *Securing Child Restraints (With the Seat Belt in the Front Seat)* ⇨ *84* for more information, including important safety information.

Never put a rear-facing child restraint in the front. This is because the risk to the rear-facing child is so great if the airbag deploys.

⚠ Warning

A child in a rear-facing child restraint can be seriously injured or killed if the front outboard passenger airbag inflates. This is because the back of the rear-facing child restraint would be very close to the inflating airbag. A child in a forward-facing

(Continued)

Warning (Continued)

child restraint can be seriously injured or killed if the front outboard passenger airbag inflates and the passenger seat is in a forward position.

Even if the airbag switch has turned off the front outboard passenger frontal airbag, no system is fail-safe. No one can guarantee that an airbag will not deploy under some unusual circumstance, even though it is turned off.

Secure rear-facing child restraints in a rear seat, even if the airbag is off. If you secure a forward-facing child restraint in the front outboard passenger seat, always move the seat as far back as it will go. It is better to secure the child restraint in a rear seat.

When securing a child restraint with the seat belts in a rear seat position, study the instructions that came with the child restraint to make sure it is compatible with this vehicle.

Child restraints and booster seats vary considerably in size, and some may fit in certain seating positions better than others.

Depending on where you place the child restraint and the size of the child restraint, you may not be able to access adjacent seat belts or LATCH anchors for additional passengers or child restraints. Adjacent seating positions should not be used if the child restraint prevents access to or interferes with the routing of the seat belt.

If the vehicle does not have a rear seat that will accommodate a rear-facing child restraint, a rear-facing child restraint should not be installed in the vehicle, even if the airbag is off.

Wherever a child restraint is installed, be sure to follow the instructions that came with the child restraint system and secure the child restraint system properly.

Keep in mind that an unsecured child restraint can move around in a collision or sudden stop and injure people in the vehicle. Be sure to properly secure any child restraint in the vehicle — even when no child is in it.

Lower Anchors and Tethers for Children (LATCH System)

The LATCH system secures a child restraint during driving or in a crash. LATCH attachments on the child restraint are used to attach the child restraint to the anchors in the vehicle. The LATCH system is designed to make installation of a child restraint easier.

In order to use the LATCH system in your vehicle, you need a child restraint that has LATCH attachments. LATCH-compatible rear-facing and forward-facing child seats can be properly installed using either the LATCH anchors or the vehicle's seat belts. Do not use both the seat belts and the LATCH anchorage system to secure a rear-facing or forward-facing child seat.

Booster seats use the vehicle's seat belts to secure the child and the booster seat. If the manufacturer recommends that the booster seat be secured with the LATCH system, this can be done as long as the booster seat can be positioned properly and there is no interference with the proper positioning of the lap-shoulder belt on the child.

Make sure to follow the instructions that came with the child restraint, and also the instructions in this manual.

When installing a child restraint with a top tether, you must also use either the lower anchors or the seat belts to properly secure the child restraint. A child restraint must never be installed using only the top tether and anchor.

The LATCH anchorage system can be used until the combined weight of the child plus the child restraint is 29.5 kg (65 lbs). Use the seat belt alone instead of the LATCH anchorage system once the combined weight is more than 29.5 kg (65 lbs).

See *Securing Child Restraints (With the Seat Belt in the Rear Seat)* ⇨ *82* or *Securing Child Restraints (With the Seat Belt in the Front Seat)* ⇨ *84*.

Child restraints built after March 2014 will be labeled with the specific child weight up to which the LATCH system can be used to install the restraint.

The following explains how to attach a child restraint with these attachments in the vehicle.

Not all vehicle seating positions have lower anchors. In this case, the seat belt must be used (with top tether where available) to secure the child restraint.

See *Securing Child Restraints (With the Seat Belt in the Rear Seat)* ⇨ *82* or *Securing Child Restraints (With the Seat Belt in the Front Seat)* ⇨ *84*.

Lower Anchors

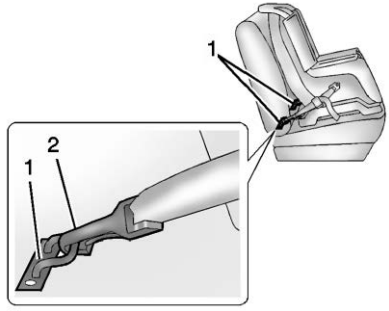

Lower anchors (1) are metal bars built into the vehicle. There are two lower anchors for each LATCH seating position that will accommodate a child restraint with lower attachments (2).

Top Tether Anchor

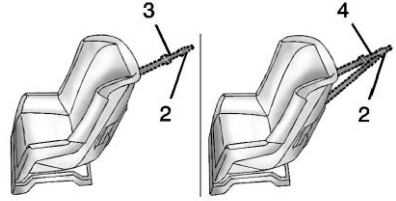

A top tether (3,4) is used to secure the top of the child restraint to the vehicle. A top tether anchor is built into the vehicle. The top tether attachment hook (2) on the child restraint connects to the top tether anchor in the vehicle in order to reduce the forward movement and rotation of the child restraint during driving or in a crash.

The child restraint may have a single tether (3) or a dual tether (4). Either will have a single attachment hook (2) to secure the top tether to the anchor.

Some child restraints that have a top tether are designed for use with or without the top tether being attached. Others require the top tether always to be attached.
In Canada, the law requires that forward-facing child restraints have a top tether, and that the tether be attached. Be sure to read and follow the instructions for your child restraint.

Lower Anchor and Top Tether Anchor Locations

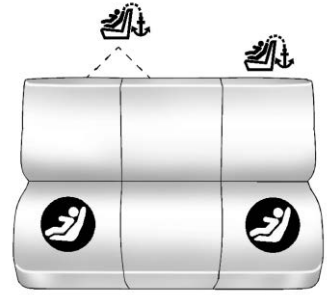

Second, Third, and Fourth Row with Three-Passenger Seat

: Seating positions with top tether anchors.

: Seating positions with two lower anchors.

See the information following for installing a child restraint with a top tether in the second, third, and fourth row center positions.

Never install two top tethers using the same top tether anchor.

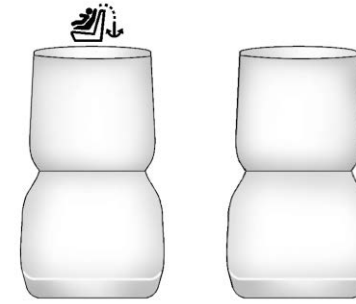

Front Passenger Position

: Seating positions with top tether anchors.

The second, third, and fourth row with three-passenger seats have exposed metal lower anchors in the crease between the seatback and the seat cushion.

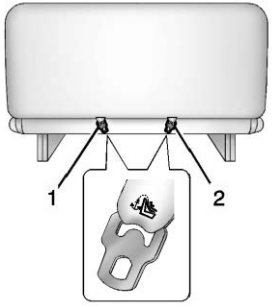

Second, Third, and Fourth Row with Three-Passenger Seat — Passenger Van

There are two top tether anchors in the second, third, and fourth row three-passenger seats. To install a child restraint in the rear driver-side seating positions, use anchor point (1). To install a child restraint in the rear passenger-side seating positions, use anchor point (2). To install a child restraint in the rear center seating positions, use anchor point (2). Never install two top tethers using the same top tether anchor.

If the vehicle is equipped with a four-passenger fourth or fifth row seat, it does not have upper or lower anchors. If a child restraint is placed in the four-passenger fourth or fifth row seat, it must be secured using the vehicle seat belts.
See *Securing Child Restraints (With the Seat Belt in the Rear Seat)* ⇨ *82* or *Securing Child Restraints (With the Seat Belt in the Front Seat)* ⇨ *84*.

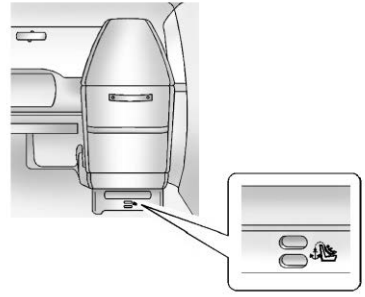

Front Passenger Position

There is a top tether anchor for the front passenger position with a front passenger seat. The anchor is at the rear of the seat cushion on the right front passenger seat.

Do not secure a child restraint in a position without a top tether anchor if a national or local law requires that the top tether be attached, or if the instructions that come with the child restraint say that the top tether must be attached.

According to accident statistics, children and infants are safer when properly restrained in a child

restraint system or infant restraint system secured in a rear seating position. See *Where to Put the Restraint* ⇨ *74* for additional information.

Securing a Child Restraint Designed for the LATCH System

⚠ Warning

A child could be seriously injured or killed in a crash if the child restraint is not properly attached to the vehicle using either the LATCH anchors or the vehicle seat belt. Follow the instructions that came with the child restraint and the instructions in this manual.

⚠ Warning

To reduce the risk of serious or fatal injuries during a crash, do not attach more than one child restraint to a single anchor. Attaching more than one child restraint to a single anchor could cause the anchor or attachment to come loose or even break during a crash. A child or others could be injured.

⚠ Warning

Children can be seriously injured or strangled if a shoulder belt is wrapped around their neck. The shoulder belt can tighten but cannot be loosened if it is locked. The shoulder belt locks when it is pulled all the way out of the retractor. It unlocks when the shoulder belt is allowed to go all the way back into the retractor,

(Continued)

Warning (Continued)

but it cannot do this if it is wrapped around a child's neck. If the shoulder belt is locked and tightened around a child's neck, the only way to loosen the belt is to cut it.

Buckle any unused seat belts behind the child restraint so children cannot reach them. Pull the shoulder belt all the way out of the retractor to set the lock, and tighten the belt behind the child restraint after the child restraint has been installed.

Caution

Do not let the LATCH attachments rub against the vehicle's seat belts. This may damage these parts. If necessary, move buckled seat belts to avoid rubbing the LATCH attachments.

(Continued)

Caution (Continued)

Do not fold the rear seatback when the seat is occupied. Do not fold the empty rear seat with a seat belt buckled. This could damage the seat belt or the seat. Unbuckle and return the seat belt to its stowed position, before folding the seat.

If you need to secure more than one child restraint in the rear seat, see *Where to Put the Restraint* ⇨ *74*.

1. Attach and tighten the lower attachments to the lower anchors. If the child restraint does not have lower attachments or the desired seating position does not have lower anchors, secure the child restraint with the top tether and the seat belts. Refer to the child restraint manufacturer instructions and the instructions in this manual.
   1.1. Find the lower anchors for the desired seating position.
   1.2. Put the child restraint on the seat.
   1.3. Attach and tighten the lower attachments on the child restraint to the lower anchors.
2. If the child restraint manufacturer recommends that the top tether be attached, attach and tighten the top tether to the top tether anchor, if equipped. Refer to the child restraint instructions and the following steps:
   2.1. Find the top tether anchor.
   2.2. For the second, third, and fourth row with three-passenger seats only, in the rear driver-side seating positions, use anchor point (1). For the rear passenger-side seating positions, use anchor point (2). For the center seating positions, use anchor point (2). Never install two top tethers using the same top tether anchor.
   2.3. Route and tighten the top tether according to your child restraint instructions and the following instructions:

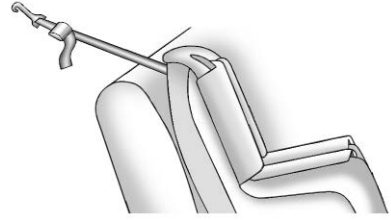

If the position you are using does not have a headrest or head restraint and you are using a single tether, route the tether over the seatback.

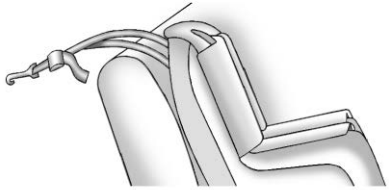

If the position you are using does not have a headrest or head restraint and you are using a dual tether, route the tether over the seatback.

If the position you are using has an integrated headrest or head restraint and you are using a dual tether, route the tether around the headrest or head restraint.

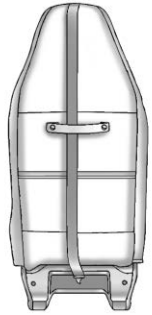

If the position you are using has an integrated headrest or head restraint and you are using a single tether, route the tether over the headrest or head restraint.

3. Before placing a child in the child restraint, make sure it is securely held in place. To check, grasp the child restraint at the LATCH path and attempt to move it side to side and back and forth. There should be no more than 2.5 cm (1 in) of movement for proper installation.

Replacing LATCH System Parts After a Crash

⚠ Warning

A crash can damage the LATCH system in the vehicle. A damaged LATCH system may not properly secure the child restraint, resulting in serious injury or even death in a crash. To help make sure the LATCH system is working properly after a crash, see your dealer to have the system inspected and any necessary replacements made as soon as possible.

If the vehicle has the LATCH system and it was being used during a crash, new LATCH system parts may be needed.

New parts and repairs may be necessary even if the LATCH system was not being used at the time of the crash.

Securing Child Restraints (With the Seat Belt in the Rear Seat)

When securing a child restraint with the seat belts in a rear seat position, study the instructions that came with the child restraint to make sure it is compatible with this vehicle.

If the child restraint has the LATCH system, see *Lower Anchors and Tethers for Children (LATCH System)* ⇨ *75* for how and where to install the child restraint using LATCH. If a child restraint is secured in the vehicle using a seat belt and it uses a top tether, see *Lower Anchors and Tethers for Children (LATCH System)* ⇨ *75* for top tether anchor locations.

Do not secure a child seat in a position without a top tether anchor if a national or local law requires that the top tether be anchored, or if the instructions that come with the child restraint say that the top strap must be anchored.

If the child restraint or vehicle seat position does not have the LATCH system, you will be using the seat belt to secure the child restraint. Be sure to follow the instructions that came with the child restraint.

If more than one child restraint needs to be installed in the rear seat, be sure to read *Where to Put the Restraint* ⇨ *74*.

1. Put the child restraint on the seat.
2. Pick up the latch plate, and run the lap and shoulder portions of the vehicle's seat belt through or around the restraint. The child restraint instructions will show you how.

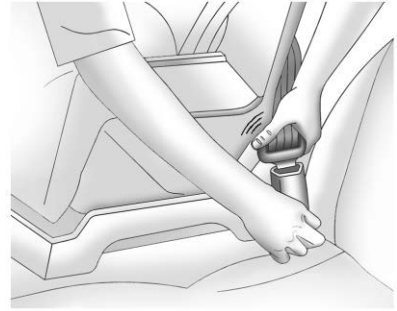

3. Push the latch plate into the buckle until it clicks.

   Position the release button on the buckle, away from the child restraint system, so that the seat belt could be quickly unbuckled if necessary.

4. Pull the shoulder belt all the way out of the retractor to set the lock. When the retractor lock is set, the belt can be tightened but not pulled out of the retractor.

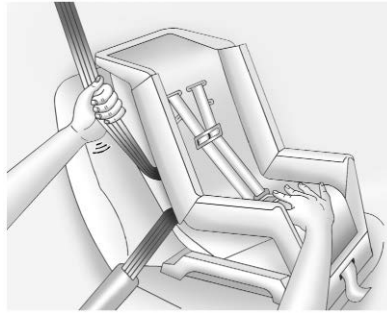

5. To tighten the belt, push down on the child restraint, pull the shoulder portion of the belt to tighten the lap portion of the belt, and feed the shoulder belt back into the retractor. When installing a forward-facing child restraint, it may be helpful to use your knee to push down on the child restraint as you tighten the belt.

   Try to pull the belt out of the retractor to make sure the retractor is locked. If the retractor is not locked, repeat Steps 4 and 5.

6. If the child restraint has a top tether, follow the child restraint manufacturer's instructions regarding the use of the top tether. See *Lower Anchors and Tethers for Children (LATCH System)* ⇨ *75*.

7. Before placing a child in the child restraint, make sure it is securely held in place. To check, grasp the child restraint at the seat belt path and attempt to move it side to side and back and forth. When the child restraint is properly installed, there should be no more than 2.5 cm (1 in) of movement.

To remove the child restraint, unbuckle the vehicle seat belt and let it return to the stowed position. If the top tether is attached to a top tether anchor, disconnect it.

Securing Child Restraints (With the Seat Belt in the Front Seat)

This vehicle has airbags. A rear seat is a safer place to secure a forward-facing child restraint. See *Where to Put the Restraint* ⇨ *74*.

There may be a switch on the instrument panel that you can use to turn off the front outboard passenger frontal airbag. See *Airbag On-Off Switch* ⇨ *63* for more information, including important safety information.

Never put a rear-facing child restraint in the front. This is because the risk to the rear-facing child is so great if the airbag deploys.

⚠ Warning

A child in a rear-facing child restraint can be seriously injured or killed if the front outboard passenger airbag inflates. This is because the back of the

(Continued)

Warning (Continued)

rear-facing child restraint would be very close to the inflating airbag. A child in a forward-facing child restraint can be seriously injured or killed if the front outboard passenger airbag inflates and the passenger seat is in a forward position.

Even if the airbag switch has turned off the front outboard passenger frontal airbag, no system is fail-safe. No one can guarantee that an airbag will not deploy under some unusual circumstance, even though it is turned off.

Secure rear-facing child restraints in a rear seat, even if the airbag is off. If you secure a forward-facing child restraint in the front outboard passenger seat, always move the seat as far back as it will go. It is better to secure the child restraint in a rear seat.

⚠ Warning

If the airbag readiness light ever comes on and stays on, it means that something may be wrong with the airbag system. For example, the front outboard passenger frontal airbag could inflate even though the airbag on-off switch is turned off.

To help avoid injury to yourself or others, have the vehicle serviced right away. See *Airbag Readiness Light* ⇨ *102* for more information, including important safety information.

If the vehicle does not have a rear seat that will accommodate a rear-facing child restraint, a rear-facing child restraint should not be installed in the vehicle, even if the airbag is off.

If the child restraint uses a top tether, see *Lower Anchors and Tethers for Children (LATCH System)* ⇨ *75* for top tether anchor locations.

Do not secure a child restraint in a position without a top tether anchor if a national or local law requires that the top tether be anchored, or if the instructions that come with the child restraint say that the top strap must be anchored.

In Canada, the law requires that forward-facing child restraints have a top tether, and that the tether be attached.

When using the lap-shoulder belt to secure the child restraint in this position, follow the instructions that came with the child restraint and the following instructions:

1. Move the seat as far back as it will go before securing the forward-facing child restraint. Move the seat upward or the seatback to an upright position, if needed, to get a tight installation of the child restraint.

   When the airbag off switch has turned off the front outboard passenger frontal airbag, the off indicator in the airbag off light should light and stay lit when you start the vehicle. See *Airbag On-Off Light* ⇨ *103*.

2. Put the child restraint on the seat.

3. Pick up the latch plate, and run the lap and shoulder portions of the vehicle's seat belt through or around the restraint. The child restraint instructions will show you how.

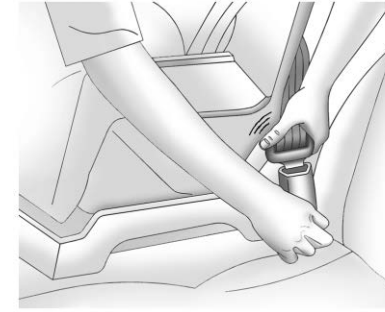

4. Push the latch plate into the buckle until it clicks.

   Position the release button on the buckle, away from the child restraint system, so that the seat belt could be quickly unbuckled if necessary.

5. Pull the shoulder belt all the way out of the retractor to set the lock. When the retractor lock is set, the belt can be tightened but not pulled out of the retractor.

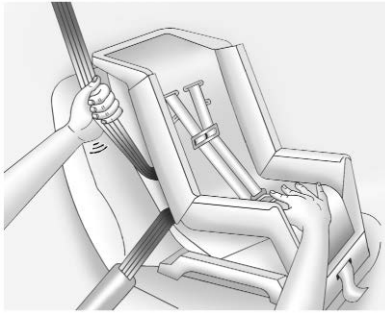

6. To tighten the belt, push down on the child restraint, pull the shoulder portion of the belt to tighten the lap portion of the belt, and feed the shoulder belt back into the retractor. When installing a forward-facing child restraint, it may be helpful to use your knee to push down on the child restraint as you tighten the belt.

   Try to pull the belt out of the retractor to make sure the retractor is locked. If the retractor is not locked, repeat Steps 5 and 6.

7. If the vehicle does not have a rear seat and the child restraint manufacturer recommends using a top tether anchor, attach the top tether to the top tether anchor. Refer to the instructions that came with the child restraint and to *Lower Anchors and Tethers for Children (LATCH System)* ⇨ *75*.

8. Before placing a child in the child restraint, make sure it is securely held in place. To check, grasp the child restraint at the seat belt path and attempt to move it side to side and back and forth. When the child restraint is properly installed, there should be no more than 2.5 cm (1 in) of movement.

To remove the child restraint, unbuckle the vehicle seat belt and let it return to the stowed position. If the top tether is attached to a top tether anchor, disconnect it.

If you turned the airbag off with the switch, turn on the front outboard passenger airbag when you remove the child restraint from the vehicle unless the person who will be sitting there is a member of a passenger airbag risk group. See *Airbag On-Off Switch* ⇨ *63* for more information, including important safety information.

Storage

Storage Compartments
Storage Compartments 88
Front Storage 88

Additional Storage Features
Cargo Tie-Downs 88

Storage Compartments

⚠ Warning

Do not store heavy or sharp objects in storage compartments. In a crash, these objects may cause the cover to open and could result in injury.

Front Storage

This vehicle may have a front storage compartment. It is located at the center of the instrument panel extension, by the floor. To open the compartment, pull up on the latch. The compartment will open automatically.

Storage compartments may also be included on the inside of each front door.

Additional Storage Features

Cargo Tie-Downs

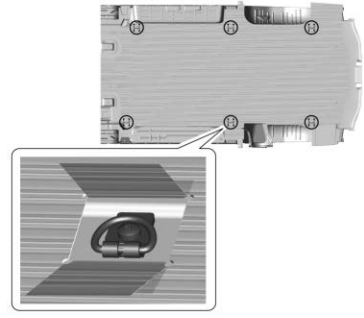

If equipped, there are six cargo tie-downs in the cargo area that can be used to secure cargo.

Do not apply a total load of more than 5 000 N (1,124 lbs of force) to a single cargo tie-down when securing cargo.

See *Vehicle Load Limits* ⇨ *169*.

⚠ Warning

The child restraint top tether strap may be damaged by contact with items in the cargo area. Your child could be seriously injured or killed in a collision if the top tether strap is damaged. Properly secure all cargo.

⚠ Warning

Properly secure all cargo with ropes or straps to help prevent it from sliding or shifting. Do not place cargo higher than the seatbacks. In a sudden stop or collision, unsecured cargo could cause personal injury. Use suitable ropes or straps to secure cargo.

⚠ Warning

Never allow anyone to ride in the cargo area. It is extremely dangerous to ride in the cargo area of a vehicle. In a collision, people riding in these areas are more likely to be seriously injured or killed.

Do not allow people to ride in any area of the vehicle that is not equipped with seats and seat belts. Be sure everyone in the vehicle is in a seat and using a seat belt properly.

Instruments and Controls

Controls

Steering Wheel Adjustment 91
Steering Wheel Controls 91
Horn 92
Windshield Wiper/Washer 92
Compass 93
Clock 95
Power Outlets 95
Cigarette Lighter 96
Ashtrays 97

Warning Lights, Gauges, and Indicators

Warning Lights, Gauges, and Indicators 97
Instrument Cluster 98
Speedometer 99
Odometer 99
Trip Odometer 99
Fuel Gauge 99
Engine Oil Pressure Gauge 100
Engine Coolant Temperature Gauge 101
Voltmeter Gauge 102
Seat Belt Reminders 102
Airbag Readiness Light 102
Airbag On-Off Light 103
Charging System Light 104
Malfunction Indicator Lamp (Check Engine Light) 105
Brake System Warning Light 107
Antilock Brake System (ABS) Warning Light 107
Tow/Haul Mode Light 108
StabiliTrak OFF Light 108
Traction Control System (TCS)/ StabiliTrak Light 108
Tire Pressure Light 109
Engine Oil Pressure Light 109
Low Fuel Warning Light 110
Security Light 110
High-Beam On Light 110
Cruise Control Light 110

Information Displays

Driver Information Center (DIC) 111

Vehicle Messages

Vehicle Messages 115
Engine Power Messages 116
Vehicle Speed Messages 116

Vehicle Personalization

Vehicle Personalization 116

Controls

Steering Wheel Adjustment

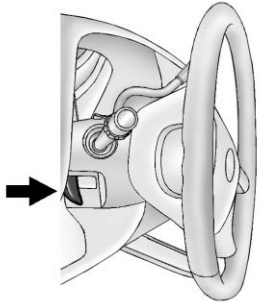

For vehicles with a tilt steering wheel, the lever is located on the left side of the steering column.

To adjust the steering wheel:

1. Pull the lever to move the steering wheel up or down into a comfortable position.
2. Release the lever to lock the steering wheel in place.

Do not adjust the steering wheel while driving.

Steering Wheel Controls

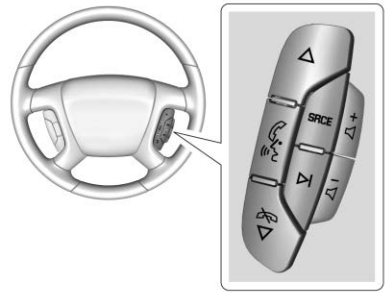

If equipped, some audio controls can be adjusted at the steering wheel.

△ **:** Press to go to the next favorite radio station, track on a CD, or folder on an iPod or USB device.

/ ▽ : Press to go to the previous favorite radio station, track on a CD, or folder on an iPod or USB device. Also press to reject an incoming call or end a current call.

Radio

To select preset or favorite radio stations:

Press and release △ or / ▽ to go to the next or previous radio station stored as a preset or favorite.

CD

To select tracks on a CD:

Press and release △ or / ▽ to go to the next or previous track.

Selecting Tracks on an iPod or USB Device

1. Press and hold △ or / ▽ while listening to a song until the contents of the current folder appear on the infotainment display.
2. Press and release △ or / ▽ to scroll up or down the list, then press and hold △ , or press ▷| to play the highlighted track.

Navigating Folders on an iPod or USB Device

1. Press and hold △ or / ▽ while listening to a song until the contents of the current folder appear on the infotainment display.
2. Press and hold / ▽ to go back to the previous folder list.
3. Press and release △ or / ▽ to scroll up or down the list.
   - To select a folder, press and hold △ , or press ⏭ when the folder is highlighted.
   - To go back further in the folder list, press and hold / ▽.

/ **:** Press to silence the vehicle speakers only. Press again to turn the sound on.

For vehicles with Bluetooth or OnStar systems, press and hold for longer than two seconds to interact with those systems.
See *Bluetooth* ⇨ *148* and *OnStar Overview* ⇨ *332*, if equipped.

SRCE : Press to switch between the radio and CD, and for equipped vehicles, the front auxiliary.

⏭ **:** Press to go to the next radio station while in AM, FM, or SiriusXM, if equipped.

If equipped with a CD player or USB port:

Press ⏭ to go to the next track or chapter while sourced to the CD.

Press ⏭ to select a track or a folder when navigating folders on an iPod or USB device.

While listening to a CD, press and hold ⏭ to quickly move forward through the tracks. Release to stop on the desired track.

+ 🔈 **:** Press to increase volume.

– 🔈 **:** Press to decrease volume.

Horn

Press the horn symbol on the steering wheel to sound the horn.

Windshield Wiper/Washer

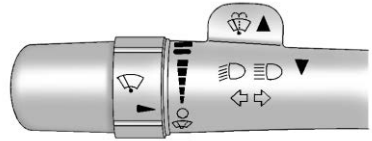

The lever is on the left side of the steering column.

Turn the band with on it to select the wiper speed.

: Use for a single wipe. Hold the band on , then release. For several wipes, hold the band on longer.

: Use to adjust the delay time between wipes. Turn the band up for more frequent wipes or down for less frequent wipes.

: Fast wipes.

▬ : Slow wipes.

◯ : Use to turn the wipers off.

When driving during the day and the wipers are activated, the headlamps automatically turn on after completing eight wipe cycles.

Clear ice and snow from the wiper blades before using them. If frozen to the windshield, carefully loosen or thaw them. Damaged blades should be replaced.

Windshield Washer

The windshield wiper paddle is on top of the turn signal lever.

: Push the paddle to spray washer fluid on the windshield. The wipers will clear the window and then either stop or return to the preset speed.

⚠ Warning

In freezing weather, do not use the washer until the windshield is warmed. Otherwise the washer fluid can form ice on the windshield, blocking your vision.

Compass

This vehicle may have a compass in the Driver Information Center (DIC).

Compass Zone

Your dealer will set the correct zone for your location.

Under certain circumstances, such as during a long distance cross-country trip or moving to a new state or province, it will be necessary to compensate for compass variance by resetting the zone through the DIC if the zone is not set correctly.

Compass variance is the difference between the earth's magnetic north and true geographic north. If the compass is not set to the zone where you live, the compass may give false readings. The compass must be set to the variance zone in which the vehicle is traveling.

To adjust for compass variance, use the following procedure:

Compass Variance (Zone) Procedure

1. Do not set the compass zone when the vehicle is moving. Only set it when the vehicle is in P (Park).

   Press until PRESS ✓ TO CHANGE COMPASS ZONE displays.

2. Find the vehicle's current location and variance zone number on the map.

   Zones 1 through 15 are available.

3. Press ✓ to scroll through and select the appropriate variance zone.

4. Press ⛰ until the vehicle heading, for example, N for North, is displayed in the DIC.

5. If calibration is necessary, calibrate the compass. See “Compass Calibration Procedure” following.

Compass Calibration

The compass can be manually calibrated. Only calibrate the compass in a magnetically clean and safe location, such as an open parking lot, where driving the vehicle in circles is not a danger. It is suggested to calibrate away from tall buildings, utility wires, manhole covers, or other industrial structures, if possible.

If CAL should ever appear in the DIC display, the compass should be calibrated.

If the DIC display does not show a heading, for example, N for North, or the heading does not change after making turns, there may be a strong magnetic field interfering with the compass. Such interference may be caused by a magnetic CB or cell phone antenna mount, a magnetic emergency light, magnetic note pad holder, or any other magnetic item. Turn off the vehicle, move the magnetic item, then turn on the vehicle and calibrate the compass.

To calibrate the compass, use the following procedure:

Compass Calibration Procedure

1. Before calibrating the compass, make sure the compass zone is set to the variance zone in which the vehicle is located. See “Compass Variance (Zone) Procedure” earlier in this section.

   Do not operate any switches such as window, climate controls, seats, etc. during the calibration procedure.

2. Press 🚗i until PRESS ✓ TO CALIBRATE COMPASS displays.

3. Press ✓ to start the compass calibration.

4. The DIC will display CALIBRATING: DRIVE IN CIRCLES. Drive the vehicle in tight circles at less than 8 km/h (5 mph) to complete the calibration. The DIC will display CALIBRATION COMPLETE for a few seconds when the

calibration is complete. The DIC display will then return to PRESS ✓ TO CALIBRATE COMPASS.

Clock

Setting the Time or Date

1. With the radio on, press ◷ and the HR, MIN, MM, DD, and YYYY (hour, minute, month, day, and year) display.
2. Press the softkey under any one of the tabs to be changed. Every time the softkey is pressed again, the time or the date if selected, increases by one.

   Another way to increase the time or date is to press ⏭ SEEK or ▷▷ FWD (forward).
3. To decrease, press ⏮ SEEK or ◁◁ REV. Turn the ♫ knob, on the upper right side of the radio, to adjust the selected setting.

Changing the Time or Date Default Settings

1. With the radio on, press ◷ and then the softkey under the forward arrow that is currently displayed on the infotainment display until the time 12H (hour) and 24H (hour), and the date MM/DD (month and day) and DD/MM (day and month) are displayed.
2. Press the softkey under the desired option.
3. Press ◷ again to apply the selected default, or let the screen time out.

Power Outlets

Power Outlets 12 Volt Direct Current

The accessory power outlets can be used to plug in electrical equipment, such as a cell phone or an MP3 player.

The vehicle may have two accessory power outlets on the instrument panel.

Remove the cover to access and replace when not in use.

Certain power accessory plugs may not be compatible to the accessory power outlet and could overload vehicle or adapter fuses. If a problem is experienced, see your dealer.

⚠ Warning

Power is always supplied to the outlets. Do not leave electrical equipment plugged in when the vehicle is not in use because the vehicle could catch fire and cause injury or death.

Caution

Leaving electrical equipment plugged in for an extended period of time while the vehicle is off will drain the battery. Always unplug electrical equipment when not in use and do not plug in equipment that exceeds the maximum 20 amp rating.

When adding electrical equipment, be sure to follow the proper installation instructions included with the equipment. See *Add-On Electrical Equipment* ⇨ *212*.

Caution

Hanging heavy equipment from the power outlet can cause damage not covered by the vehicle warranty. The power outlets are designed for accessory power plugs only, such as cell phone charge cords.

Power Outlet 110/120 Volt Alternating Current

This power outlet can be used to plug in electrical equipment that uses a maximum limit of 150 watts.

The 110/120 volt power outlet is on the instrument panel.

An indicator light on the outlet turns on to show it is in use. The light comes on when the ignition is on, equipment requiring less than 150 watts is plugged into the outlet, and no system fault is detected.

The indicator light does not come on when the ignition is off, or if the equipment is not fully seated into the outlet.

If equipment is connected using more than 150 watts or a system fault is detected, a protection circuit shuts off the power supply and the indicator light turns off. To reset the circuit, unplug the item and plug it back in or turn the Retained Accessory Power (RAP) off and then back on. See *Retained Accessory Power (RAP)* ⇨ *177*.

The power outlet is not designed for the following, and may not work properly if they are plugged in:

- Equipment with high initial peak wattage, such as compressor-driven refrigerators and electric power tools
- Other equipment requiring an extremely stable power supply, such as microcomputer-controlled electric blankets and touch sensor lamps
- Medical equipment

Cigarette Lighter

If equipped with a cigarette lighter, to heat push it in all the way and let go. When it is ready for use, it will pop back out by itself.

Do not use the lighter to plug in accessory devices. Use the power outlets provided.

Caution

Holding a cigarette lighter in while it is heating does not let the lighter back away from the heating element when it is hot. Damage from overheating can occur to the lighter or heating element, or a fuse could be blown. Do not hold a cigarette lighter in while it is heating.

Ashtrays

If equipped with a removable ashtray, it can be placed into the front floor console cupholder. Open the cover to use.

Caution

If papers, pins, or other flammable items are put in the ashtray, hot cigarettes or other smoking materials could ignite them and possibly damage the vehicle. Never put flammable items in the ashtray.

Warning Lights, Gauges, and Indicators

Warning lights and gauges can signal that something is wrong before it becomes serious enough to cause an expensive repair or replacement. Paying attention to the warning lights and gauges could prevent injury.

Some warning lights come on briefly when the engine is started to indicate they are working. When one of the warning lights comes on and stays on while driving, or when one of the gauges shows there may be a problem, check the section that explains what to do. Waiting to do repairs can be costly and even dangerous.

Instrument Cluster

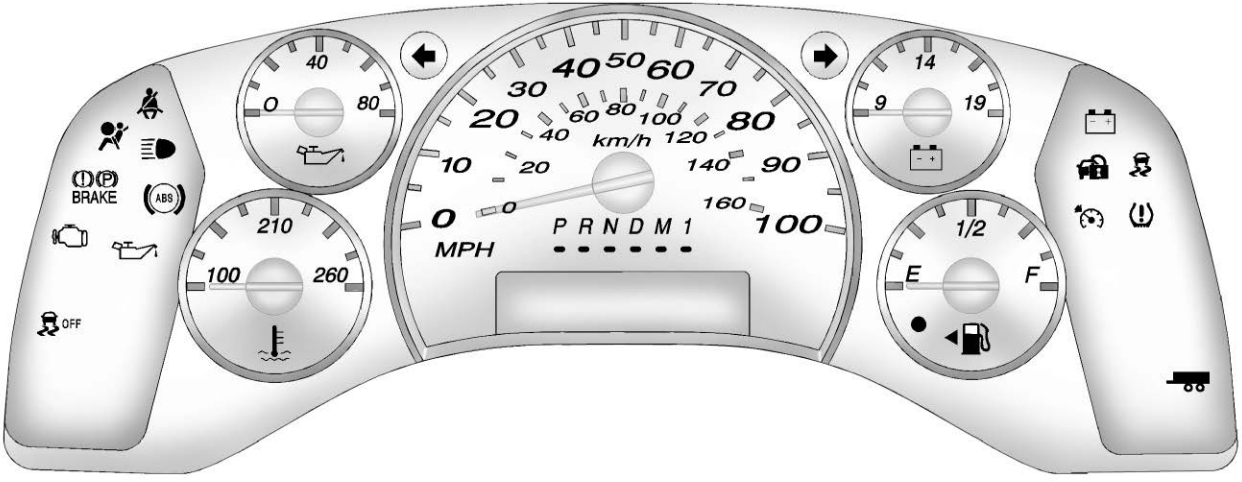

English Shown, Metric Similar

If the vehicle has a diesel engine, see the Duramax diesel supplement for more information.

Speedometer

The speedometer shows the vehicle speed in kilometers per hour (km/h) and miles per hour (mph).

Odometer

The odometer shows how far the vehicle has been driven, in either kilometers or miles.

Trip Odometer

The trip odometer shows how far the vehicle has been driven since the trip odometer was last reset.

The trip odometer is accessed and reset through the Driver Information Center (DIC). See *Driver Information Center (DIC)* ⇨ *111*.

Fuel Gauge

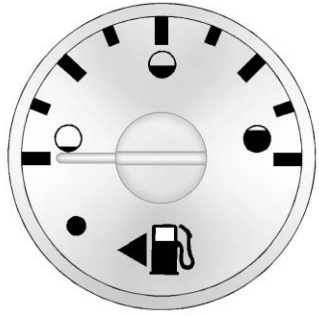

Metric

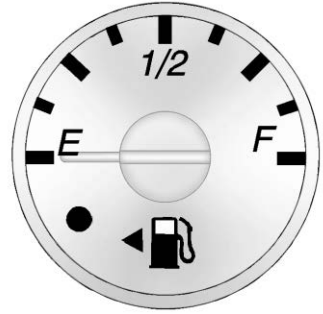

English

The fuel gauge, when the ignition is on, indicates how much fuel is left in the vehicle fuel tank.

An arrow on the fuel gauge indicates the side of the vehicle the fuel door is on.

The gauge first indicates empty before the vehicle is out of fuel, and the fuel tank should be refueled soon.

Listed are four situations customers might experience with the fuel gauge. None of these indicate a problem with the fuel gauge:

- At the gas station, the fuel pump shuts off before the gauge reads full.
- It takes a little more or less fuel to fill up than the fuel gauge indicated. For example, the gauge may have indicated the tank was half full, but it actually took a little more or less than half the tank's capacity to fill the tank.
- The gauge moves a little while turning a corner or speeding up.
- The gauge does not go back to empty when the ignition is turned off.

If the vehicle has a diesel engine, see the Duramax diesel supplement.

Engine Oil Pressure Gauge

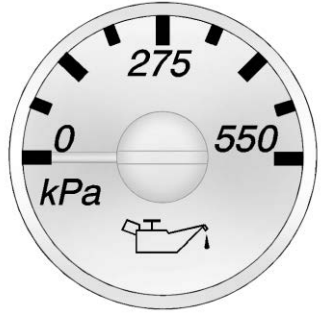

Metric

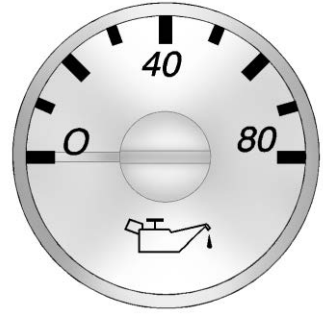

English

The oil pressure gauge shows the engine oil pressure in psi (pounds per square inch) or kPa (kilopascals) when the engine is running.

Oil pressure may vary with engine speed, outside temperature and oil viscosity, but readings above the low pressure zone indicate the normal operating range.

A reading in the low pressure zone may be caused by a dangerously low oil level or other problem causing low oil pressure.

Caution

Lack of proper engine oil maintenance can damage the engine. Driving with the engine oil low can also damage the engine. The repairs would not be covered by the vehicle warranty. Check the oil level as soon as possible. Add oil if required, but if the oil level is within the operating range and the oil pressure is still low, have the vehicle serviced. Always follow the maintenance schedule for changing engine oil.

Engine Coolant Temperature Gauge

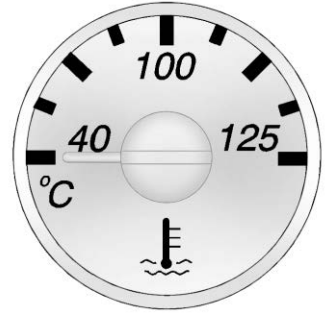

Metric

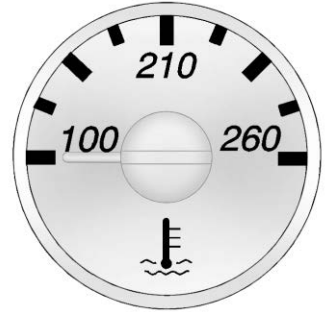

English

This gauge shows the engine coolant temperature.

It also provides an indicator of how hard the vehicle is working. During a majority of the operation, the gauge will read 100 °C (210 °F) or less. If the vehicle is pulling a load or going up hills, it is normal for the temperature to fluctuate and approach the 122 °C (250 °F) mark. If the gauge reaches the 125 °C (260 °F) mark, it indicates that the cooling system is working beyond its capacity.

See *Engine Overheating* ⇨ *233*.

Voltmeter Gauge

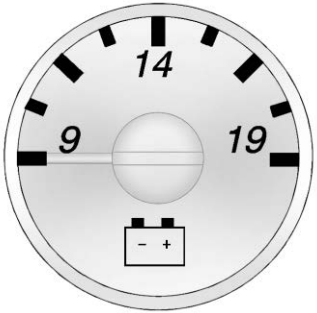

When the engine is not running, but the ignition is on, this gauge shows the battery's state of charge in DC volts.

When the engine is running, the gauge shows the condition of the charging system. Readings between the low and high warning zones indicate the normal operating range.

Readings in the low warning zone may occur when a large number of electrical accessories are operating in the vehicle and the engine is left at an idle for an extended period. This condition is normal since the charging system is not able to provide full power at engine idle. As engine speeds are increased, this condition should correct itself as higher engine speeds allow the charging system to create maximum power.

The vehicle can be only driven for a short time with the reading in either warning zone. If it must be driven, turn off all unnecessary accessories.

Readings in either warning zone indicate a possible problem in the electrical system. Have the vehicle serviced as soon as possible.

Seat Belt Reminders

Seat Belt Reminder Light

There is a seat belt reminder light on the instrument cluster.

When the vehicle is started, this light flashes and a chime may come on to remind the driver to fasten their seat belt. Then the light stays on solid until the belt is buckled. This cycle may continue several times if the driver remains or becomes unbuckled while the vehicle is moving.

If the driver seat belt is buckled, neither the light nor the chime comes on.

Airbag Readiness Light

This light shows if there is an electrical problem with the airbag system. The system check includes the airbag sensor(s), the pretensioners (if equipped), the airbag modules, the wiring, and the crash sensing and diagnostic

module. For more information on the airbag system, see *Airbag System* ⇨ *56*.

The airbag readiness light comes on for several seconds when the vehicle is started. If the light does not come on then, have it fixed immediately.

⚠ Warning

If the airbag readiness light stays on after the vehicle is started or comes on while driving, it means the airbag system might not be working properly. The airbags in the vehicle might not inflate in a crash, or they could even inflate without a crash. To help avoid injury, have the vehicle serviced right away.

If there is a problem with the airbag system, a Driver Information Center (DIC) message may also display.

Airbag On-Off Light

When the front outboard passenger airbag is manually turned off using the airbag on-off switch on the instrument panel, if equipped, the indicator light OFF or the off symbol will come on and stay on as a reminder that the airbag has been turned off. This light will go off when the airbag has been turned on. See *Airbag On-Off Switch* ⇨ *63* for more information, including important safety information.

United States

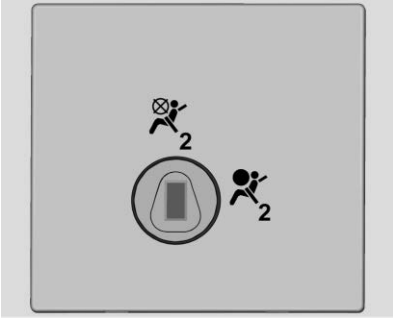

Canada and Mexico

⚠ Warning

If the front outboard passenger frontal airbag is turned off for a person who is not in a risk group identified by the national government, that person will not have the extra protection of an airbag. In a crash, the airbag will not be able to inflate and help protect the person sitting there. Do not turn off the front outboard passenger frontal airbag unless

(Continued)

Warning (Continued)

the person sitting there is in a risk group identified by the national government. See *Airbag On-Off Switch* ⇨ *63* for more information, including important safety information.

⚠ Warning

If the airbag readiness light ever comes on and stays on, it means that something may be wrong with the airbag system. For example, the front outboard passenger frontal airbag could inflate even though the airbag on-off switch is turned off.

To help avoid injury to yourself or others, have the vehicle serviced right away. See *Airbag Readiness Light* ⇨ *102* for more information, including important safety information.

If the word ON or the on symbol is lit, it means that the front outboard passenger frontal airbag is enabled, and may inflate. See *Airbag On-Off Switch* ⇨ *63* for more information, including important safety information.

Charging System Light

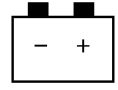

This light comes on briefly when the ignition key is turned to START, but the engine is not running, as a check to show it is working.

If it does not, have the vehicle serviced by your dealer.

The light should go out once the engine starts. If it stays on, or comes on while driving, there could be a problem with the charging system. A charging system message in the Driver Information Center (DIC) can also appear. This

light could indicate that there are problems with a generator drive belt, or that there is an electrical problem. Have it checked right away. If the vehicle must be driven a short distance with the light on, turn off accessories, such as the radio and air conditioner.

Malfunction Indicator Lamp (Check Engine Light)

This light is part of the vehicle's emission control on-board diagnostic system. If this light is on while the engine is running, a malfunction has been detected and the vehicle may require service. The light should come on to show that it is working when the ignition is on and the engine is not running. See *Ignition Positions* ⇨ *174*.

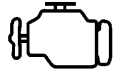

Malfunctions are often indicated by the system before any problem is noticeable. Being aware of the light and seeking service promptly when it comes on may prevent damage.

Caution

If the vehicle is driven continually with this light on, the emission control system may not work as well, the fuel economy may be lower, and the vehicle may not run smoothly. This could lead to costly repairs that might not be covered by the vehicle warranty.

Caution

Modifications to the engine, transmission, exhaust, intake, or fuel system, or the use of replacement tires that do not meet the original tire specifications, can cause this light to come on. This could lead to costly repairs not covered by the vehicle warranty. This could also affect the vehicle's ability to pass an Emissions Inspection/ Maintenance test. See *Accessories and Modifications* ⇨ *215*.

If the light is flashing : A malfunction has been detected that could damage the emission control system and increase vehicle emissions. Diagnosis and service may be required.

To help prevent damage, reduce vehicle speed and avoid hard accelerations and uphill grades.

If towing a trailer, reduce the amount of cargo being hauled as soon as possible.

If the light continues to flash, find a safe place to park. Turn the vehicle off and wait at least 10 seconds before restarting the engine. If the light is still flashing, follow the previous guidelines and see your dealer for service as soon as possible.

If the light is on steady : A malfunction has been detected. Diagnosis and service may be required.

Check the following:

- A loose or missing fuel cap may cause the light to come on. See *Filling the Tank* ⇨ *200*. A few driving trips with the cap properly installed may turn the light off.
- Poor fuel quality can cause inefficient engine operation and poor driveability, which may go away once the engine is warmed up. If this occurs, change the fuel brand. It may require at least one full tank of the proper fuel to turn the light off. See *Fuel* ⇨ *197*.

If the light remains on, see your dealer.

Emissions Inspection and Maintenance Programs

If the vehicle requires an Emissions Inspection/Maintenance test, the test equipment will likely connect to the vehicle's Data Link Connector (DLC).

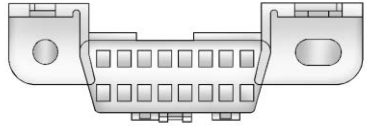

The DLC is under the instrument panel to the left of the steering wheel. Connecting devices that are not used to perform an Emissions Inspection/Maintenance test or to service the vehicle may affect vehicle operation. See *Add-On Electrical Equipment* ⇨ *212*. See your dealer if assistance is needed.

The vehicle may not pass inspection if:

- The light is on when the engine is running.
- The light does not come on when the ignition is on while the engine is off.
- Critical emission control systems have not been completely diagnosed. If this happens, the vehicle would not be ready for inspection and might require several days of routine driving before the system is ready for inspection. This can happen if the 12-volt battery has recently been replaced or run down, or if the vehicle has been recently serviced.

See your dealer if the vehicle will not pass or cannot be made ready for the test.

Brake System Warning Light

The vehicle brake system consists of two hydraulic circuits. If one circuit is not working, the remaining circuit can still work to stop the vehicle. For normal braking performance, both circuits need to be working.

If the warning light comes on, there could be a brake problem. Have the brake system inspected right away.

Metric

English

This light should come on briefly when the engine is started. If it does not come on then, have it fixed so it will be ready to warn you if there is a problem.

When the ignition is on, the brake system warning light also comes on when the parking brake is set. See *Parking Brake* ⇨ *187* for more information. The light stays on if the parking brake does not fully release. If it stays on after the parking brake is fully released, it means the vehicle has a brake problem.

If the light comes on while driving, pull off the road and stop carefully. The pedal might be harder to push, or the pedal might go closer to the floor. It could take longer to stop. If the light is still on, have the vehicle towed for service. See *Towing the Vehicle* ⇨ *289*.

⚠ Warning

The brake system might not be working properly if the brake system warning light is on. Driving with the brake system warning light on can lead to a crash. If the light is still on after the vehicle has been pulled off the road and carefully stopped, have the vehicle towed for service.

Antilock Brake System (ABS) Warning Light

This light comes on briefly when the engine is started.

If the light does not come on, have it fixed so it will be ready to warn if there is a problem.

If the light comes on while driving, stop as soon as it is safely possible and turn off the vehicle. Then start the engine again to reset the system. If the ABS light stays on, or comes on again while driving, the vehicle needs service.

If the ABS light is the only light on, the vehicle has regular brakes, but the antilock brakes are not functioning.

If both the ABS and the brake system warning light are on, the vehicle's antilock brakes are not functioning and there is a problem with the regular brakes. See your dealer for service.

See *Brake System Warning Light* ⇨ *107*.

Tow/Haul Mode Light

For vehicles with the Tow/Haul Mode feature, this light comes on when the Tow/Haul Mode has been activated.

See *Tow/Haul Mode* ⇨ *185*.

StabiliTrak OFF Light

This light comes on briefly while starting the engine. If it does not, have the vehicle serviced by your dealer.

This light comes on when the StabiliTrak system is turned off. If StabiliTrak is off, the Traction Control System (TCS) is also off.

If the StabiliTrak and TCS are off, the system does not assist in controlling the vehicle. Turn on the TCS and the StabiliTrak systems and the warning light turns off.

See *Traction Control/Electronic Stability Control* ⇨ *188*.

Traction Control System (TCS)/StabiliTrak Light

This light comes on briefly when the engine is started.

If the light does not come on, have the vehicle serviced by your dealer. If the system is working normally, the indicator light turns off.

If the light is on and not flashing, the TCS and potentially the StabiliTrak system have been disabled. A Driver Information Center (DIC) message may display. Check the DIC messages to determine which feature(s) is no longer functioning and whether the vehicle requires service.

If the light is on and flashing, the TCS and/or the StabiliTrak system is actively working.

See *Traction Control/Electronic Stability Control* ⇨ *188*.

Tire Pressure Light

For vehicles with the Tire Pressure Monitor System (TPMS), this light comes on briefly when the engine is started. It provides information about tire pressures and the TPMS.

When the Light Is On Steady

This indicates that one or more of the tires are significantly underinflated.

A Driver Information Center (DIC) tire pressure message may also display. Stop as soon as possible, and inflate the tires to the pressure value shown on the Tire and Loading Information label. See *Tire Pressure* ⇨ *263*.

When the Light Flashes First and Then Is On Steady

If the light flashes for about a minute and then stays on, there may be a problem with the TPMS. If the problem is not corrected, the light will come on at every ignition cycle. See *Tire Pressure Monitor Operation* ⇨ *265*.

Engine Oil Pressure Light

Caution

Lack of proper engine oil maintenance can damage the engine. Driving with the engine oil low can also damage the engine. The repairs would not be covered by the vehicle warranty. Check the oil level as soon as possible. Add oil if required, but if the oil level is within the operating range and the oil pressure is still low, have the vehicle serviced. Always follow the maintenance schedule for changing engine oil.

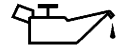

This light should come on briefly as the engine is started. If it does not come on, have the vehicle serviced by your dealer.

If the light comes on and stays on, it means that oil is not flowing through the engine properly. The vehicle could be low on oil and might have some other system problem. See your dealer.

Low Fuel Warning Light

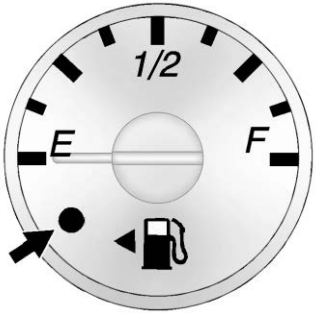

English Shown, Metric Similar

This light comes on for a few seconds when the ignition is turned on as a check to indicate it is working. If it does not come on, have it fixed.

The low fuel warning light comes on and a chime sounds when the vehicle is low on fuel. The light turns off when fuel is added to the fuel tank.

See *Driver Information Center (DIC)* ⇨ *111*.

Security Light

The security light should come on briefly as the engine is started. If it does not come on, have the vehicle serviced by your dealer. If the system is working normally, the indicator light turns off.

If the light stays on and the engine does not start, there could be a problem with the theft-deterrent system. See *Immobilizer Operation* ⇨ *34*.

High-Beam On Light

This light comes on when the high-beam headlamps are in use.

See *Headlamp High/Low-Beam Changer* ⇨ *123*.

Cruise Control Light

This light comes on when the cruise control is set.

This light goes out when the cruise control is canceled. See *Cruise Control* ⇨ *191*.

Information Displays

Driver Information Center (DIC)

This vehicle has a DIC.

All messages will appear in the DIC display at the bottom of the instrument cluster.

The DIC comes on when the ignition is on. After a short delay, the DIC will display the information that was last displayed before the engine was turned off.

The DIC displays trip, fuel, and vehicle system information, and warning messages if a system problem is detected.

If the vehicle has these features, the DIC also displays the compass direction and the outside air temperature when viewing the trip and fuel information. The compass direction appears on the top right corner of the DIC display. The outside air temperature automatically appears in the bottom right corner of the DIC display.
If there is a problem with the system that controls the temperature display, the numbers will be replaced with dashes. If this occurs, have the vehicle serviced by your dealer.

If the vehicle has a diesel engine, see the Duramax diesel supplement.

DIC Operation and Displays

The DIC has different displays which can be accessed by pressing the DIC buttons on the instrument panel, next to the instrument cluster.

DIC Buttons

The buttons are the trip/fuel, vehicle information, customization, and set/reset buttons. The button functions are detailed in the following pages.

: Press this button to display the odometer, trip odometers, fuel range, average economy, fuel used, timer, average speed, and digital tachometer.

: Press this button to display the oil life, rear park assist, units, tire pressure readings for vehicles with the Tire Pressure Monitor System (TPMS), engine hours, Tire Pressure Monitor System (TPMS)

programming for vehicles with the TPMS and without a Remote Keyless Entry (RKE) transmitter, and compass zone and compass calibration on vehicles with this feature.

: Press this button to customize the feature settings on the vehicle. See *Vehicle Personalization* ⇨ *116* for more information.

✓ : Press this button to set or reset certain functions and to turn off or acknowledge messages on the DIC.

Trip/Fuel Menu Items

: Press this button to scroll through the following menu items:

Odometer

Press until XX km (mi) displays. This display shows the distance the vehicle has been driven in either kilometers (km) or miles (mi).

Trip Odometers

Press until A or B displays. This display shows the current distance traveled in either kilometers (km) or miles (mi) since the last reset for each trip odometer. Both trip odometers can be used at the same time.

Each trip odometer can be reset to zero separately by pressing ✓ while the desired trip odometer is displayed.

The trip odometer has a feature called the retro-active reset. This can be used to set the trip odometer to the number of kilometers (miles) driven since the ignition was last turned on. This can be used if the trip odometer is not reset at the beginning of the trip.

To use the retro-active reset feature, press and hold ✓ for at least four seconds. The trip odometer will display the number of kilometers (km) or miles (mi) driven since the ignition was last turned on and the vehicle was moving. Once the vehicle begins moving, the trip odometer will accumulate mileage. For example, if the vehicle was driven 8 km (5 miles) before it is started again, and then the retro-active reset feature is activated, the display will show 8 km (5 miles). As the vehicle begins moving, the display will then increase to 8.1 km (5.1 miles), 8.2 km (5.2 miles), etc.

If the retro-active reset feature is activated after the vehicle is started, but before it begins moving, the display will show the number of kilometers (km) or miles (mi) that were driven during the last ignition cycle.

Fuel Range

Press until FUEL RANGE displays. This display shows the approximate number of remaining kilometers (km) or miles (mi) the vehicle can be driven without refueling. The display will show LOW if the fuel level is low.

The fuel range estimate is based on an average of the fuel economy over recent driving history and the amount of fuel remaining in the fuel tank. This estimate will change if driving conditions change. For example, if driving in traffic and making frequent stops, this display may read one number, but if the vehicle is driven on a freeway, the number may change even though the same amount of fuel is in the fuel tank. This is because different driving conditions produce different fuel economies. Generally, freeway driving produces better fuel economy than city driving.

If the vehicle is low on fuel, the FUEL LEVEL LOW message will be displayed.

Average Economy

Press until AVG ECONOMY displays. This display shows the approximate average liters per 100 kilometers (L/100 km) or miles per gallon (mpg). This number is calculated based on the number of L/100 km (mpg) recorded since the last time this menu item was reset. To reset AVG ECONOMY, press and hold ✓. The display will return to zero.

Fuel Used

Press until FUEL USED displays. This display shows the number of liters (L) or gallons (gal) of fuel used since the last reset of this menu item. To reset the fuel used information, press and hold ✓ while FUEL USED is displayed.

Timer

Press until TIMER displays. This display can be used as a timer.

To start the timer, press ✓ while TIMER is displayed. The display will show the amount of time that has passed since the timer was last reset, not including time the ignition is off. Time will continue to be counted as long as the ignition is on, even if another display is being shown on the DIC. The timer will record up to 99 hours, 59 minutes and 59 seconds (99:59:59) after which the display will return to zero.

To stop the timer, press ✓ briefly while TIMER is displayed.

To reset the timer to zero, press and hold ✓ while TIMER is displayed.

Average Speed

Press until AVERAGE SPEED displays. This display shows the average speed of the vehicle in kilometers per hour (km/h) or miles per hour (mph). This average is calculated based on the various vehicle speeds recorded since the last reset of this value. To reset the value, press and hold ✓. The display will return to zero.

Digital Tachometer

Press until Tachometer ##00 RPM displays. This display shows the engine speed in revolutions per minute (RPM).

Blank Display

This display shows no information.

Vehicle Information Menu Items

: Press this button to scroll through the following menu items:

Oil Life

Press until OIL LIFE REMAINING displays. This display shows an estimate of the oil's remaining useful life. If you see 99% OIL LIFE REMAINING on the display, that means 99% of the current oil life remains. The engine oil life system will alert you to change the oil on a schedule consistent with your driving conditions.

When the remaining oil life is low, the CHANGE ENGINE OIL SOON message will appear on the display. You should change the oil as soon as possible. See *Engine Oil* ⇨ *220*. In addition to the engine oil life system monitoring the oil life, additional maintenance is recommended. See *Maintenance Schedule* ⇨ *303*.

Remember, you must reset the OIL LIFE yourself after each oil change. It will not reset itself. Also, be careful not to reset the OIL LIFE accidentally at any time other than when the oil has just been changed. It cannot be reset accurately until the next oil change. To reset the engine oil life system, see *Engine Oil Life System* ⇨ *222*.

Side Blind Zone Alert

If the vehicle has Side Blind Zone Alert (SBZA), this display allows the system to be turned on or off.

Press until SBZA displays.

Once in this display, press ✓ to select between ON or OFF. When the SBZA system is turned off, a DIC message will display. See *Side Blind Zone Alert (SBZA)* ⇨ *195*.

Park Assist

If the vehicle has the Rear Parking Assist (RPA) system, press until PARK ASSIST displays. This display allows the system to be turned on or off. Once in this display, press to select between ON or OFF. The RPA system automatically turns back on after each vehicle start. When the RPA system is turned off and the vehicle is shifted out of P (Park), the DIC will display the PARK ASSIST OFF message as a reminder that the system has been turned off. See *Parking Assist* ⇨ *194*.

Units

Press until UNITS displays. This display allows you to select between metric or English units of measurement. Once in this display, press ✓ to select between METRIC or ENGLISH units.

Tire Pressure

If the vehicle has the Tire Pressure Monitor System (TPMS), the pressure for each tire can be viewed in the DIC. The tire pressure will be shown in either kilopascals (kPa) or pounds per square inch (psi). Press until the DIC displays FRONT

TIRES PSI (kPa) LEFT ## RIGHT ##. Press again until the DIC displays REAR TIRES PSI (kPa) LEFT ## RIGHT ##.

If a low tire pressure condition is detected by the system while driving, a message advising you to check the pressure in a specific tire will appear in the display. See *Tire Pressure* ⇨ *263*.

If the tire pressure display shows dashes instead of a value, there may be a problem with the vehicle. If this consistently occurs, see your dealer for service.

Engine Hours

Press until ENGINE HOURS displays. This display shows the total number of hours the engine has run.

Relearn Tire Positions

The vehicle may have this display. To access this display, the vehicle must be in P (Park). If the vehicle has the Tire Pressure Monitor System (TPMS), after rotating the tires or after replacing a tire or sensor, the system must re-learn the tire positions. To re-learn the tire positions, see *Tire Pressure Monitor System* ⇨ *264*.
See *Tire Inspection* ⇨ *268* and *Tire Rotation* ⇨ *268*.

Change Compass Zone

The vehicle may have this feature. To change the compass zone through the DIC, see *Compass* ⇨ *93*.

Calibrate Compass

The vehicle may have this feature. The compass can be manually calibrated. To calibrate the compass through the DIC, see *Compass* ⇨ *93*.

Blank Display

This display shows no information.

Vehicle Messages

Messages displayed on the DIC indicate the status of the vehicle or some action that may be needed to correct a condition. Multiple messages may appear one after another.

The messages that do not require immediate action can be acknowledged and cleared by pressing ✓. The messages that require immediate action cannot be cleared until that action is performed.

All messages should be taken seriously; clearing the message does not correct the problem.

If a SERVICE message appears, see your dealer.

Follow the instructions given in the messages. The system displays messages regarding the following topics:

- Service Messages
- Fluid Levels
- Vehicle Security

- Brakes
- Ride Control Systems
- Driver Assistance Systems
- Cruise Control
- Lighting and Bulb Replacement
- Wiper/Washer Systems
- Doors and Windows
- Seat Belts
- Airbag Systems
- Engine and Transmission
- Tire Pressure
- Battery

Engine Power Messages

ENGINE POWER IS REDUCED

This message displays when the vehicle's propulsion power is reduced. Reduced propulsion power can affect the vehicle's ability to accelerate. If this message is on, but there is no observed reduction in performance, proceed to your destination. The performance may be reduced the next time the vehicle is driven. The vehicle may be driven while this message is on, but maximum acceleration and speed may be reduced. Anytime this message stays on, or displays repeatedly, the vehicle should be taken to your dealer for service as soon as possible.

Vehicle Speed Messages

SPEED LIMITED TO XXX KM/H (MPH)

This message shows that the vehicle speed has been limited to the speed displayed. The limited speed is a protection for various propulsion and vehicle systems, such as lubrication, thermal, suspension, Teen Driver if equipped, or tires.

Vehicle Personalization

This vehicle may have customization capabilities that allow you to program certain features to one preferred setting. Customization features can only be programmed to one setting on the vehicle and cannot be programmed to a preferred setting for two different drivers.

All of the customization options may not be available on your vehicle. Only the options available will be displayed on the DIC.

The default settings for the customization features were set when the vehicle left the factory, but may have been changed from their default state since then.

The customization preferences are automatically recalled.

To change customization preferences, use the following procedure.

Entering the Feature Settings Menu

1. Turn the ignition on and place the vehicle in P (Park).

   To avoid excessive drain on the battery, it is recommended that the headlamps are turned off.

2. Press ⊟ to enter the feature settings menu.

   If the menu is not available, FEATURE SETTINGS AVAILABLE IN PARK will display. Before entering the menu, make sure the vehicle is in P (Park).

Feature Settings Menu Items

The following are customization features that allow you to program settings to the vehicle:

DISPLAY IN ENGLISH

This feature will only display if a language other than English has been set. This feature allows you to change the language in which the DIC messages appear to English.

Press ⊟ until the PRESS ✓ TO DISPLAY IN ENGLISH screen appears on the DIC display. Press the set/reset button once to display all DIC messages in English.

LANGUAGE

This feature allows you to select the language in which the DIC messages will appear.

Press ⊟ until the LANGUAGE screen appears on the DIC display. Press ✓ once to access the settings for this feature. Then press ⊟ to scroll through the following settings:

ENGLISH (default) : All messages will appear in English.

FRANCAIS : All messages will appear in French.

ESPANOL : All messages will appear in Spanish.

ARABIC : All messages will appear in Arabic.

NO CHANGE : No change will be made to this feature. The current setting will remain.

To select a setting, press ✓ while the desired setting is displayed on the DIC. A beep will sound once a language has been selected.

AUTO DOOR LOCK

This feature allows you to select when the doors will automatically lock.

Press ⊟ until AUTO DOOR LOCK appears on the DIC display. Press ✓ once to access the settings for this feature. Then press ⊟ to scroll through the following settings:

SHIFT OUT OF PARK (default) : The doors will automatically lock when the vehicle is shifted out of P (Park).

AT VEHICLE SPEED : The doors will automatically lock when the vehicle speed is above 13 km/h (8 mph) for three seconds.

NO CHANGE : No change will be made to this feature. The current setting will remain.

To select a setting, press ✓ while the desired setting is displayed on the DIC.

AUTO DOOR UNLOCK

This feature allows you to select whether or not to turn off the automatic door unlocking feature. It also allows you to select which doors and when the doors will automatically unlock.

Press until AUTO DOOR UNLOCK appears on the DIC display. Press ✓ once to access the settings for this feature. Then press to scroll through the following settings:

OFF : None of the doors will automatically unlock.

DRIVER AT KEY OUT : Only the driver door will unlock when the key is taken out of the ignition.

DRIVER IN PARK : Only the driver door will unlock when the vehicle is shifted into P (Park).

ALL AT KEY OUT : All of the doors will unlock when the key is taken out of the ignition.

ALL IN PARK (default) : All of the doors will unlock when the vehicle is shifted into P (Park).

NO CHANGE : No change will be made to this feature. The current setting will remain.

To select a setting, press ✓ while the desired setting is displayed on the DIC.

REMOTE DOOR LOCK

This feature allows you to select the type of feedback you will receive when locking the vehicle with the Remote Keyless Entry (RKE) transmitter. You will not receive feedback when locking the vehicle with the RKE transmitter if the doors are open. See *Remote Keyless Entry (RKE) System Operation* ⇨ *26*.

Press until REMOTE DOOR LOCK appears on the DIC display. Press ✓ once to access the settings for this feature. Then press to scroll through the following settings:

OFF : There will be no feedback when you press on the RKE transmitter.

LIGHTS ONLY : The exterior lamps will flash when you press on the RKE transmitter.

HORN ONLY : The horn will sound on the second press of on the RKE transmitter.

HORN & LIGHTS (default) : The exterior lamps will flash when you press on the RKE transmitter, and the horn will sound when is pressed again within five seconds of the previous command.

NO CHANGE : No change will be made to this feature. The current setting will remain.

To select a setting, press ✓ while the desired setting is displayed on the DIC.

REMOTE DOOR UNLOCK

This feature allows you to select the type of feedback you will receive when unlocking the vehicle with the Remote Keyless Entry (RKE) transmitter. You will not receive feedback when unlocking the vehicle with the RKE transmitter if the doors are open. See *Remote Keyless Entry (RKE) System Operation* ⇨ *26*.

Press until REMOTE DOOR UNLOCK appears on the DIC display. Press ✓ once to access the settings for this feature. Then press to scroll through the following settings:

LIGHTS OFF : The exterior lamps will not flash when you press on the RKE transmitter.

LIGHTS ON (default) : The exterior lamps will flash when you press on the RKE transmitter.

NO CHANGE : No change will be made to this feature. The current setting will remain.

To select a setting, press ✓ while the desired setting is displayed on the DIC.

DELAY DOOR LOCK

This feature allows you to select whether or not the locking of the doors will be delayed. When locking the doors with the power door lock switch and a door is open, this feature will delay locking the doors until five seconds after the last door is closed. You will hear three chimes to signal that the delayed locking feature is in use. The key must be out of the ignition for this feature to work. You can temporarily override delayed locking by pressing the power door lock switch twice or on the RKE transmitter twice. See *Delayed Locking* ⇨ *30*.

Press until DELAY DOOR LOCK appears on the DIC display. Press ✓ once to access the settings for this feature. Then press to scroll through the following settings:

OFF : There will be no delayed locking of the vehicle's doors.

ON (default) : The doors will not lock until five seconds after the last door is closed.

NO CHANGE : No change will be made to this feature. The current setting will remain.

To select a setting, press ✓ while the desired setting is displayed on the DIC.

EXIT LIGHTING

This feature allows you to select the amount of time you want the exterior lamps to remain on when it is dark enough outside. This happens after the key is turned from on to off.

Press until EXIT LIGHTING appears on the DIC display. Press ✓ once to access the settings for this feature. Then press to scroll through the following settings:

OFF : The exterior lamps will not turn on.

10 SECONDS (default) : The exterior lamps will stay on for 10 seconds.

1 MINUTE : The exterior lamps will stay on for one minute.

2 MINUTES : The exterior lamps will stay on for two minutes.

NO CHANGE : No change will be made to this feature. The current setting will remain.

To select a setting, press ✓ while the desired setting is displayed on the DIC.

APPROACH LIGHTING

This feature allows you to select whether or not to have the exterior lamps turn on briefly during low light periods after unlocking the vehicle using the Remote Keyless Entry (RKE) transmitter.

Press until APPROACH LIGHTING appears on the DIC display. Press ✓ once to access the settings for this feature. Then press to scroll through the following settings:

OFF : The exterior lamps will not turn on when you unlock the vehicle with the RKE transmitter.

ON (default) : If it is dark enough outside, the exterior lamps will turn on briefly when you unlock the vehicle with the RKE transmitter. The lamps will remain on for 20 seconds or until on the RKE transmitter is pressed, or the vehicle is no longer off. See *Remote Keyless Entry (RKE) System Operation* ⇨ *26*.

NO CHANGE : No change will be made to this feature. The current setting will remain.

To select a setting, press ✓ while the desired setting is displayed on the DIC.

CHIME VOLUME

This feature allows you to select the volume level of the chime.

Press until CHIME VOLUME appears on the DIC display. Press ✓ once to access the settings for this feature. Then press to scroll through the following settings:

NORMAL : The chime volume will be set to a normal level.

LOUD : The chime volume will be set to a loud level.

NO CHANGE : No change will be made to this feature. The current setting will remain.

There is no default for chime volume. The volume will stay at the last known setting.

To select a setting, press ✓ while the desired setting is displayed on the DIC.

FACTORY SETTINGS

This feature allows you to set all of the customization features back to their factory default settings.

Press until FACTORY SETTINGS appears on the DIC display. Press ✓ once to access the settings for this feature. Then press to scroll through the following settings:

RESTORE ALL (default) : The customization features will be set to their factory default settings.

DO NOT RESTORE : The customization features will not be set to their factory default settings.

To select a setting, press ✓ while the desired setting is displayed on the DIC.

EXIT FEATURE SETTINGS

This feature allows you to exit the feature settings menu.

Press until FEATURE SETTINGS PRESS ✓ TO EXIT appears in the DIC display. Press ✓ once to exit the menu.

If you do not exit, pressing will return you to the beginning of the feature settings menu.

Exiting the Feature Settings Menu

The feature settings menu will be exited when any of the following occurs:

- The vehicle is no longer on.
- The or DIC buttons are pressed.
- The end of the feature settings menu is reached and exited.
- A 40–second time period has elapsed with no selection made.

Lighting

Exterior Lighting
Exterior Lamp Controls 122
Exterior Lamps Off Reminder 123
Headlamp High/Low-Beam Changer 123
Flash-to-Pass 123
Daytime Running Lamps (DRL) 123
Automatic Headlamp System 124
Hazard Warning Flashers 125
Turn and Lane-Change Signals 125

Interior Lighting
Instrument Panel Illumination Control 126
Dome Lamps 126
Reading Lamps 126

Lighting Features
Entry/Exit Lighting 127
Battery Load Management . . . 127
Battery Power Protection 127
Exterior Lighting Battery Saver 127

Exterior Lighting

Exterior Lamp Controls

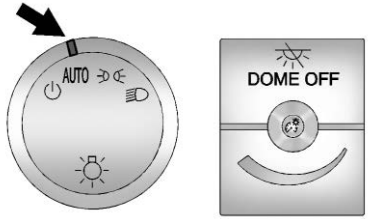

The exterior lamp control is on the instrument panel to the left of the steering wheel.

There are four positions:

⏻ **:** Briefly turn the control to this position to turn the automatic headlamps and Daytime Running Lamps (DRL) off or back on.

For vehicles first sold in Canada, the off position only works for vehicles that are shifted into the P (Park) position.

AUTO : Automatically turns the exterior lamps on and off, depending on outside lighting.

: Turns on the parking lamps including all lamps, except the headlamps.

: Turns on the headlamps together with the parking lamps and instrument panel lights.

If the headlamps are turned on while the vehicle is on, the headlamps turn off automatically 10 minutes after the ignition is turned off. If the headlamps are turned on while the vehicle is off, the headlamps will continue to stay on. To prevent the battery from being drained, turn the control to the ⏻ position.

A warning chime sounds if the driver door is opened while the ignition switch is off and the headlamps are on.

To change the headlamps from low beam to high beam, pull the turn signal lever all the way toward you. Then release it.

Exterior Lamps Off Reminder

If a door is open, a reminder chime sounds when the headlamps or parking lamps are manually turned on and the key is out of the ignition. To turn off the chime, turn the headlamp switch to ⏻ or AUTO and then back on, or close and re-open the door. In the auto mode, the headlamps turn off once the ignition is off or may remain on until the headlamp delay ends, if enabled in the Driver Information Center (DIC). See “Exit Lighting” under *Vehicle Personalization* ⇨ *116*.

Headlamp High/ Low-Beam Changer

: Pull the turn signal lever all the way toward you to change the headlamps from low to high beam. Then release it.

Pull the turn signal lever all the way toward you again and release it to change the headlamps back to low beam.

This instrument cluster light comes on when the high-beam headlamps are on.

Flash-to-Pass

This feature is used to signal to the vehicle ahead that you want to pass.

If the headlamps are off or in the low-beam position, pull the turn signal lever toward you to momentarily switch to high beams.

Release the lever to turn the high-beam headlamps off.

Daytime Running Lamps (DRL)

DRL can make it easier for others to see the front of the vehicle during the day. Fully functional DRL are required on all vehicles first sold in Canada.

The DRL system comes on in daylight when the following conditions are met:

- The ignition is on.
- The exterior lamp control is in the AUTO position.
- The shift lever is not in P (Park).
- The light sensor determines it is daytime.

When the DRL are on, the taillamps, sidemarker, instrument panel lights, and other lamps will not be on.

The automatic headlamp system automatically switches from DRL to the headlamps depending on the darkness of the surroundings.

To turn off the DRL, turn the exterior lamp control to ⏻ and then release it. For vehicles first sold in Canada, the DRL can only be turned off when the vehicle is parked.

Automatic Headlamp System

When it is dark enough outside and the headlamp switch is in AUTO, the automatic headlamp system turns on the headlamps, along with the taillamps, sidemarker lamps, parking lamps, and the instrument panel lights. The radio lights will also be dim.

To turn off the automatic headlamp system, turn the exterior lamp control to the off position and then release. For vehicles first sold in Canada, the transmission must be in the P (Park) position, before the automatic headlamp system can be turned off.

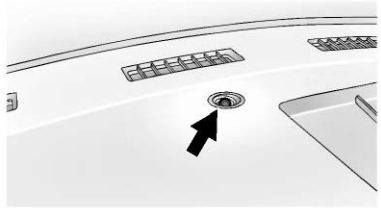

The vehicle has a light sensor on the top of the instrument panel. Do not cover the sensor; otherwise the system will come on whenever the ignition is on.

The system may also turn on the headlamps when driving through a parking garage or tunnel.

There is a delay in the transition between the daytime and nighttime operation of the Daytime Running Lamps (DRL) and the automatic headlamp system so that driving under bridges or bright overhead street lights does not affect the system. The DRL and automatic headlamp system are only affected when the light sensor sees a change in lighting lasting longer than the delay.

If the vehicle is started in a dark garage, the automatic headlamp system comes on immediately. Once the vehicle leaves the garage, it takes approximately 30 seconds for the automatic headlamp system to change to DRL if it is light outside. During that delay, the instrument cluster may not be as bright as usual. Make sure the instrument panel brightness control is in the full bright position. See *Instrument Panel Illumination Control* ⇨ *126*.

Lights On with Wipers

If the windshield wipers are activated in daylight with the engine on, and the exterior lamp control is in AUTO, the headlamps, parking lamps, and other exterior lamps come on. The transition time for the lamps coming on varies based on wiper speed. When the wipers are not operating, these lamps turn off. Move the exterior lamp control to ⏻ or ≡OO≡ to disable this feature.

Hazard Warning Flashers

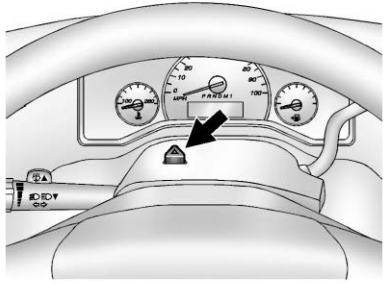

⚠ **:** Press this button to make the front and rear turn signal lamps flash on and off. This warns others that you are having trouble. Press again to turn the flashers off.

When the hazard warning flashers are on, the vehicle's turn signals will not work.

Turn and Lane-Change Signals

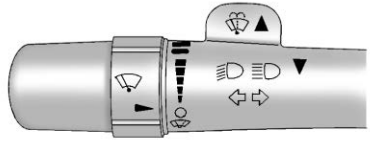

⇦⇨ **:** An arrow on the instrument cluster flashes in the direction of the turn or lane change.

To signal a turn, move the lever all the way up or down.

To signal a lane change, raise or lower the lever until the arrow starts to flash. The turn signal automatically flashes three times and if the Tow/Haul Mode is active it flashes six times. Holding the turn signal lever for more than one second causes the turn signals to flash continually until the lever is released.

The lever returns to its starting position when released.

If after signaling a turn or lane change the arrow flashes rapidly or does not come on, a signal bulb may be burned out.

Have any burned out bulbs replaced. If a bulb is not burned out, check the fuse. See *Fuses and Circuit Breakers* ⇨ *248*.

Turn Signal On Chime

If the turn signal is left on for more than 1.2 km (0.75 mi), a chime sounds at each flash of the turn signal and the message TURN SIGNAL ON also appears in the Driver Information Center (DIC). To turn off the chime and message, move the turn signal lever to the off position.

Interior Lighting

Instrument Panel Illumination Control

The knob for this feature is to the left of the steering column.

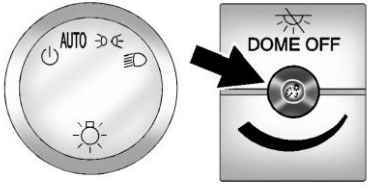

: Push the knob to extend and then turn clockwise or counterclockwise to brighten or dim the instrument panel lights and the radio display. This only works if the headlamps or parking lamps are on.

Dome Lamps

The dome lamps come on when any door is opened. They turn off after all the doors are closed.

The instrument panel brightness knob extends when is pressed. To manually turn on the dome lamps, press then turn the knob clockwise to the farthest position. In this position, the dome lamps remain on whether a door is opened or closed.

Dome Lamp Override

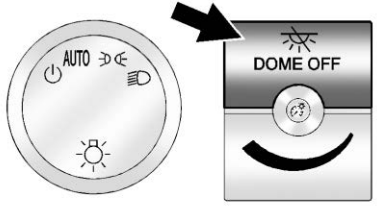

The dome lamp override sets the dome lamps to remain off or come on automatically when a door is opened.

DOME OFF : Press this button in and the dome lamps remain off when a door is opened. Press the button again to return it to the extended position so that the dome lamps come on when a door is opened.

Reading Lamps

If equipped with reading lamps, press the button next to each lamp to turn it on or off.

The vehicle may also have reading lamps in other locations. The lamps cannot be adjusted.

Lighting Features

Entry/Exit Lighting

The vehicle has an illuminated entry/exit feature.

The dome lamps come on if the DOME OFF button is in the extended position, when a door is opened, or the key is removed from the ignition.

Battery Load Management

The vehicle may have Electric Power Management (EPM) that estimates the battery's temperature and state of charge. It then adjusts the voltage for best performance and extended life of the battery.

When the battery's state of charge is low, the voltage is raised slightly to quickly bring the charge back up. When the state of charge is high, the voltage is lowered slightly to prevent overcharging. If the vehicle has a voltmeter gauge or a voltage display on the Driver Information Center (DIC), you may see the voltage move up or down. This is normal. If there is a problem, an alert will be displayed.

The battery can be discharged at idle if the electrical loads are very high. This is true for all vehicles. This is because the generator (alternator) may not be spinning fast enough at idle to produce all the power that is needed for very high electrical loads.

A high electrical load occurs when several of the following are on, such as: headlamps, high beams, fog lamps, rear window defogger, climate control fan at high speed, heated seats, engine cooling fans, trailer loads, and loads plugged into accessory power outlets.

EPM works to prevent excessive discharge of the battery. It does this by balancing the generator's output and the vehicle's electrical needs. It can increase engine idle speed to generate more power, whenever needed. It can temporarily reduce the power demands of some accessories.

Normally, these actions occur in steps or levels, without being noticeable. In rare cases at the highest levels of corrective action, this action may be noticeable to the driver. If so, a Driver Information Center (DIC) message might be displayed, such as SERVICE BATTERY CHARGING SYSTEM. If this messages displays, it is recommended that the driver reduce the electrical loads as much as possible.

Battery Power Protection

This feature shuts off the dome lamps if they are left on for more than 10 minutes when the ignition is off. This helps to prevent the battery from running down.

Exterior Lighting Battery Saver

The exterior lamps turn off about 10 minutes after the ignition is turned off, if the parking lamps or headlamps have been manually left on. This protects against draining

the battery. To restart the 10-minute timer, turn the exterior lamp control to the ⏻ position and then back to the ≡OO≡ or ≣D position.

To keep the lamps on for more than 10 minutes, the ignition must be on or in ACC/ACCESSORY.

Infotainment System

Introduction
Infotainment 129
Theft-Deterrent Feature 130
Overview (AM-FM Radio) 130
Overview (Radio with CD/MP3) 132
Operation 133

Radio
AM-FM Radio 135
Satellite Radio 136
Radio Reception 137
Multi-Band Antenna 138

Audio Players
Avoiding Untrusted Media Devices 138
CD Player 138
Auxiliary Devices 143

OnStar System
OnStar System 148

Phone
Bluetooth 148

Introduction

Infotainment

Base radio information is included in this manual. See the infotainment manual for information on other available infotainment systems.

Read the following pages to become familiar with the features.

⚠ Warning

Taking your eyes off the road for too long or too often while using any infotainment feature can cause a crash. You or others could be injured or killed. Do not give extended attention to infotainment tasks while driving. Limit your glances at the vehicle displays and focus your attention on driving. Use voice commands whenever possible.

The infotainment system has built-in features intended to help avoid distraction by disabling some functions when driving. These functions may gray out when they are unavailable. Many infotainment features are also available through the instrument cluster and steering wheel controls.

Before driving:

- Become familiar with the operation, center stack controls, and infotainment display controls.
- Set up the audio by presetting favorite stations, setting the tone, and adjusting the speakers.
- Set up phone numbers in advance so they can be called easily by pressing a single control or by using a single voice command if equipped with Bluetooth phone capability.

See *Defensive Driving* ⇨ *163*.

To play the infotainment system with the ignition off, see *Retained Accessory Power (RAP)* ⇨ *177*.

Theft-Deterrent Feature

The theft-deterrent feature works by learning a portion of the Vehicle Identification Number (VIN) to the infotainment system. The infotainment system does not operate if it is stolen or moved to a different vehicle.

Overview (AM-FM Radio)

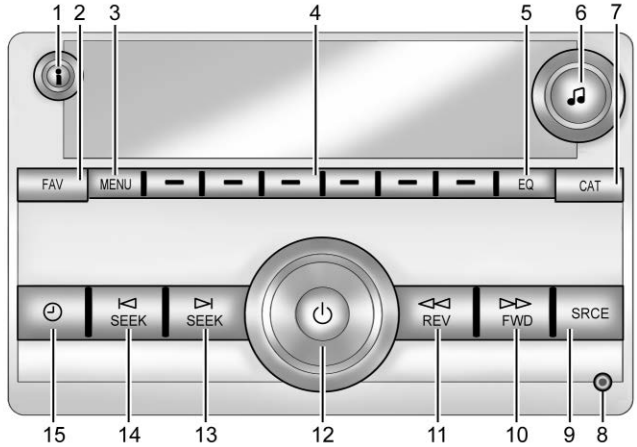

Overview (AM-FM Radio)

1. ℹ
   - Press to show information on the current station or track.
2. FAV
   - Press to scroll through the favorite pages.
3. MENU
   - Press to set the number of favorite pages.
   - Press to select the Speed Compensation Volume setting.

- Press to turn Auto Page Text Information on or off.

4. Buttons 1 - 6
   - Press to save and select favorite stations.
5. EQ
   - Press to adjust the equalizer.
6. ♫
   - Press to set the bass, midrange, treble, fade, and balance.
   - Turn to manually select radio stations.
7. CAT
   - Press to display a list of SXM categories, if equipped.
8. Auxiliary Input Jack (If Equipped)
   - Use to connect external audio devices.
9. SRCE
   - Press to scroll through auxiliary devices, AM, FM, or SXM if equipped.
10. ▷▷ FWD
    - Press and hold to fast forward through a track.
11. ◁◁ REV
    - Press and hold to go backward fast through a track.
12. ⏻
    - Press to turn the infotainment system on or off.
    - Turn to adjust the volume.
13. ▷| SEEK
    - Seeks or scans to the next station.
14. |◁ SEEK
    - Seeks or scans to the previous station.
15. ◴
    - Press to set the clock and date.

Overview (Radio with CD/MP3)

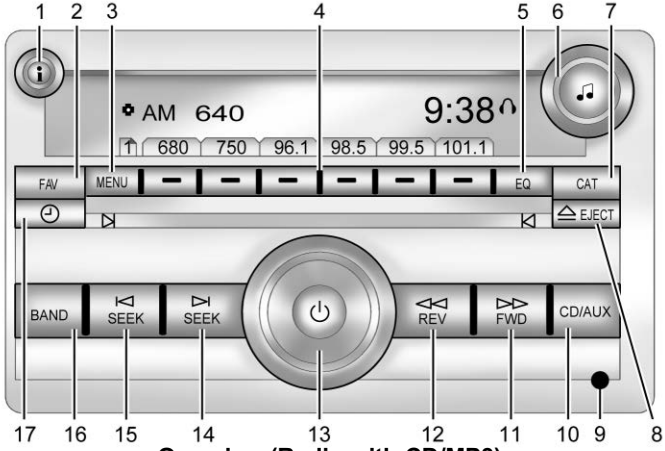

Overview (Radio with CD/MP3)

1. ℹ
   - Press to show information on the current station or track.
2. FAV
   - Press to scroll through the favorite pages.
3. MENU
   - Press to set the number of favorite pages.
   - Press to select the Speed Compensation Volume setting.
   - Press to turn Auto Page Text Information on or off.
4. Buttons 1 - 6
   - Saves and selects favorite stations.
5. EQ
   - Press to adjust the equalizer.
6. ♫
   - Press to set the bass, midrange, treble, fade, and balance.
   - Turn to manually select radio stations.
7. CAT
   - Press to display a list of SXM categories, if equipped.
8. ⏏ EJECT
   - Press to eject the loaded CD.

9. Auxiliary Input Jack (If Equipped)
   - Use to connect external audio devices.
10. CD/AUX
   - Press to scroll through selecting the CD or an auxiliary device.
11. ▷▷ FWD
   - Press and hold to fast forward through a track.
12. ◁◁ REV
   - Press and hold to go backward fast through a track.
13. ⏻
   - Press to turn the infotainment system on or off.
   - Turn to adjust the volume.
14. ▷| SEEK
   - Seeks or scans to the next station.
15. |◁ SEEK
   - Seeks or scans to the previous station.
16. BAND
   - Press to scroll through the available bands FM1, FM2, AM, or SXM if equipped.
17. ◴
   - Press to set the clock and date.

Operation

Using the Radio

⏻ : Press to turn the system on and off.

Turn clockwise or counterclockwise to increase or decrease the volume.

i : Press to switch the display between the radio station frequency and the time. While the ignition is off, press this button to display the time. Press to display additional text information related to the current FM-RDS station or MP3 song.
A choice of additional information such as Channel, Song, Artist, and CAT (category) can display. Continue pressing to highlight the desired tab, or press the softkey under any one of the tabs and the information about that tab displays.

Speed Compensated Volume (SCV) : SCV automatically adjusts the radio volume to compensate for road and wind noise as the vehicle speed changes while driving, so that the volume level stays consistent.

To activate SCV:

1. Set the radio volume to the desired level.
2. Press the MENU button to display the radio setup menu.
3. Press the softkey under the AUTO VOLUM (automatic volume) tab on the infotainment display.
4. Press the softkey under the desired SCV setting (OFF, Low, Med, or High) to select the level of radio volume compensation. The display times out after approximately

10 seconds. Each higher setting allows for more radio volume compensation at faster vehicle speeds.

Setting the Tone (Bass/Treble)

To adjust the bass or treble:

1. Press the ♫ knob until Bass or Treble displays.
2. To adjust the setting, do one of the following:
   - Turn the ♫ knob.
   - Press ⏭ SEEK, or ⏮ SEEK.

EQ : Press this button to choose bass and treble equalization settings designed for different types of music. Selecting MANUAL, or changing bass or treble, returns the EQ to the manual bass and treble settings.

Unique EQ settings can be saved for each source.

Adjusting the Speakers (Balance/Fade)

BAL/FADE : To adjust the balance or fade:

1. Press the ♫ knob until the speaker control tabs display.
2. Highlight the desired speaker control tab by doing one of the following:
   - Press the ♫ knob.
   - Press the softkey under the desired tab.
3. Adjust the setting by doing one of the following:
   - Turn the ♫ knob clockwise or counterclockwise.
   - Press ⏭ SEEK or ⏮ SEEK.
   - Press ▷▷ FWD or ◁◁ REV.

To quickly adjust all speaker and tone controls to the middle position, press the ♫ knob for more than two seconds.

If the Rear Seat Audio (RSA) is turned on, the radio disables FADE and mutes the rear speakers.

Radio Messages

Calibration Error : The audio system has been calibrated for the vehicle from the factory.
If Calibration Error displays, it means that the radio has not been configured properly for the vehicle and it must be returned to your dealer for service.

VIN or NO VIN : One of these messages will display when the TheftLock system has locked up the radio. Take the vehicle to your dealer for service.

If any error occurs repeatedly or if an error cannot be corrected, contact your dealer.

Radio

AM-FM Radio

Radio Data System (RDS)

The radio may have an RDS. The RDS feature is available for use only on FM stations that broadcast RDS information. This system relies upon receiving specific information from these stations and only works when the information is available. While the radio is tuned to an FM-RDS station, the station name or call letters display. In rare cases, a radio station could broadcast incorrect information that causes the radio features to work improperly. If this happens, contact the radio station.

Finding a Station

BAND or SRCE : Press to switch between FM1, FM2, AM, and SXM if equipped. The selection displays.

♫ : Turn clockwise or counterclockwise to increase or decrease the station frequency.

⏮ SEEK or ⏭ SEEK : Press ⏮ SEEK to go to the previous or ⏭ SEEK to go to the next station and stay there.

To scan stations, press and hold either button for two seconds until a beep sounds. The radio goes to a station, plays for a few seconds, then goes to the next station. For AM-FM Radio and Radio with CD, the station frequency flashes while the radio is in the scan mode. Press either button again to stop scanning.

The radio seeks and scans stations only with a strong signal that are in the selected band.

Scan presets within the current selected band by pressing and holding either SEEK button for four seconds until a double beep sounds. The radio goes to a stored preset, plays for a few seconds if a strong signal is present, then goes to the next stored preset. The station frequency flashes while the radio is in the scan mode.

Storing a Radio Station as a Favorite

You are encouraged to set up radio station favorites while the vehicle is parked. Tune to favorite stations using the presets, favorites button, and steering wheel controls, if equipped. See *Defensive Driving* ⇨ *163*.

FAV : If equipped with a FAV button, a maximum of 36 stations can be programmed as favorites by using the six softkeys below the radio station frequency tabs and by using the radio favorites page button (FAV button). Press FAV to go through up to six pages of favorites, each having six favorite stations available per page. Each page of favorites can contain any combination of AM and FM stations.

The balance/fade and tone settings that were previously adjusted are stored with the favorite stations.

To store a station as a favorite:

1. Tune to the desired radio station.

2. Press FAV to display the page where the station is to be stored.
3. Press and hold one of the six softkeys until a beep sounds. When that softkey is pressed and released, the station that was set returns.
4. Repeat the steps for each softkey radio station to be stored as a favorite.

The number of favorites pages can be set up using the MENU button. To set up the number of favorites pages:

1. Press MENU to display the radio setup menu.
2. Press the softkey below the FAV 1-6 tab.
3. Select the desired number of favorites pages by pressing the softkey below the displayed page numbers.
4. Press FAV, or let the menu time out, to return to the original main radio screen showing the radio station frequency tabs and to begin the process of programming favorites for the chosen number of numbered pages.

Satellite Radio

SiriusXM, if equipped, is a satellite radio service based in the United States and Canada only.

Finding a Category (CAT) Station

CAT : The CAT button is used to find SXM channels (if equipped) while the radio is in the SXM mode.

Finding a Channel

BAND or SRCE : Press to switch between FM1, FM2, AM, and SXM if equipped. The selection displays.

♫ : Turn clockwise or counterclockwise to increase or decrease the station frequency.

⏮ SEEK or ⏭ SEEK : Press ⏮ SEEK to go to the previous or ⏭ SEEK to go to the next station and stay there.

To scan stations, press and hold either button for two seconds until a beep sounds. The radio goes to a station, plays for a few seconds, then goes to the next station. The station frequency flashes while the radio is in the scan mode. Press either button again to stop scanning.

The radio seeks and scans stations only with a strong signal that are in the selected band.

To scan presets within the current selected band, press and hold either SEEK button for four seconds until a double beep sounds. The radio goes to a stored preset, plays for a few seconds if a strong signal is present, then goes to the next stored preset. The station frequency flashes while the radio is in the scan mode.

Storing a Radio Station as a Favorite

You are encouraged to set up radio station favorites while the vehicle is parked. Tune to favorite stations using the presets, favorites button,

and steering wheel controls, if equipped. See *Defensive Driving* ⇨ *163*.

FAV : If equipped with a FAV button, a maximum of 36 stations can be programmed as favorites using the six softkeys below the radio station frequency tabs and by using the radio favorites page button (FAV button). Press FAV to go through up to six pages of favorites, each having six favorite stations available per page. Each page of favorites can contain any combination of AM, FM, or SXM stations.

The balance/fade and tone settings that were previously adjusted are stored with the favorite stations.

To store a station as a favorite:

1. Tune to the desired radio station.
2. Press FAV to display the page where the station is to be stored.
3. Press and hold one of the six softkeys until a beep sounds. When that softkey is pressed and released, the station that was set returns.
4. Repeat the steps for each softkey radio station to be stored as a favorite.

The number of favorites pages can be set up using the MENU button. To set up the number of favorites pages:

1. Press MENU to display the radio setup menu.
2. Press the softkey below the FAV 1-6 tab.
3. Select the desired number of favorites pages by pressing the softkey below the displayed page numbers.
4. Press FAV, or let the menu time out, to return to the original main radio screen showing the radio station frequency tabs and to begin the process of programming favorites for the chosen number of numbered pages.

Radio Reception

Frequency interference and static can occur during normal radio reception if items such as cell phone chargers, vehicle convenience accessories, and external electronic devices are plugged into the accessory power outlet. If there is interference or static, unplug the item from the accessory power outlet.

AM

The range for most AM stations is greater than for FM, especially at night. The longer range can cause station frequencies to interfere with each other. For better radio reception, most AM radio stations boost the power levels during the day, and then reduce these levels during the night. Static can also occur when things like storms and

power lines interfere with radio reception. When this happens, try reducing the treble on the radio.

FM Stereo

FM stereo gives the best sound, but FM signals reach only about 16 to 65 km (10 to 40 mi). Tall buildings or hills can interfere with FM signals, causing the sound to fade in and out.

Cellular Phone Usage

Cellular phone usage may cause interference with the radio. This interference may occur when making or receiving phone calls, charging the phone's battery, or simply having the phone on. This interference causes an increased level of static while listening to the radio. If static is received while listening to the radio, unplug the cellular phone and turn it off.

Multi-Band Antenna

The multi-band antenna is on the roof of the vehicle. The antenna is used for the Navigation System, OnStar and the SiriusXM Satellite Radio Service System if the vehicle has these features. Tall buildings, hills, trees, heavy foliage, tunnels, bridges, and garages will affect reception. Keep the antenna clear of obstructions for clear reception. Make sure there is sufficient clearance when entering garages or parking structures.

Audio Players

Avoiding Untrusted Media Devices

When using media devices such as CDs, DVDs, Blu-ray Discs, SD cards, USB devices, and mobile devices, consider the source. Untrusted media devices could contain files that affect system operation or performance. Avoid use if the content or origin cannot be trusted.

CD Player

Care of the CD Player

Do not add any label to a CD. It could get caught in the CD player. If a CD is recorded on a personal computer and a description label is needed, try labeling the top of the recorded CD with a marking pen.

The use of CD lens cleaners is not advised, due to the risk of contaminating the lens of the CD optics with lubricants internal to the CD player mechanism.

Caution

If a label is added to a CD, more than one CD is inserted into the slot at a time, or an attempt is made to play scratched or damaged CDs, the CD player could be damaged. While using the CD player, use only CDs in good condition without any label, load one CD at a time, and keep the CD player and the loading slot free of foreign materials, liquids, and debris.

If an error displays, see “CD Player Messages” later in this section.

Care of CDs

If playing a CD-R, the sound quality can be reduced due to CD-R or CD-RW quality, the method of recording, the quality of the music that has been recorded, and the way the CD-R or CD-RW has been handled. Handle them carefully. Store CD-Rs or CD-RWs in their original cases or other protective cases and away from direct sunlight and dust. The CD player scans the bottom surface of the disc. If the surface of a CD is damaged, such as cracked, broken, or scratched, the CD does not play properly or not at all. Do not touch the bottom side of a CD while handling it; this could damage the surface. Pick up CDs by the outer edges or the edge of the hole and the outer edge.

If the surface of a CD is soiled, clean it with a soft, lint-free cloth or dampen a clean, soft cloth in a mild, neutral detergent solution mixed with water. Make sure the wiping process starts from the center to the edge.

Inserting a CD

Insert a CD partway into the slot, label side up. The player pulls it in and the CD should begin playing.

Ejecting a CD

⏏ **EJECT :** Press and release to eject the disc. Remove the CD when Remove Disc displays. If the disc is not removed, after several seconds the disc is automatically pulled back into the player.

Playing a CD

If the ignition or radio is turned off with a CD in the player, it stays in the player. When the ignition or radio is turned on, the CD starts playing where it stopped, if it was the last selected audio source.

When a CD is inserted, the CD symbol displays on the left side of the radio display. As each new track starts to play, the track number displays.

The CD player can play the smaller 8 cm (3 in) single CDs with an adapter ring. Full-size CDs and the smaller CDs are loaded in the same manner.

CD/AUX : Press to cycle between CD or Auxiliary when listening to the radio. The CD icon and a message showing the disc and/or track number will display when a CD is in the player. Press again and the system automatically searches for an auxiliary input device; see

Auxiliary Devices ⇨ *143*. If a portable audio player is not connected, “No Input Device Found” displays.

i : Press to display additional text information related to the current song. If information is available, the song title information displays on the top line of the display and artist information displays on the bottom line. When information is not available, NO INFO displays.

♫ : Turn to select tracks on the CD that is currently playing.

⏮ **SEEK :** Press to go to the start of the current track if more than 10 seconds on the CD have played.

Press to go to the previous track if less than 10 seconds on the CD have played.

Press and hold, or press multiple times, to continue moving backward through the tracks on the CD.

⏭ **SEEK :** Press to go to the next track.

Press and hold, or press multiple times, to continue moving forward through the tracks on the CD.

◁◁ **REV :** Press and hold to reverse playback quickly within a track.

▷▷ **FWD :** Press and hold to advance playback quickly within a track.

RDM : For Radios with CD/MP3. Press to listen to tracks in random, rather than sequential order.

To use random:

1. Press the softkey under the RDM tab until Random Current Disc displays.
2. Press the softkey again to turn off random play.

MP3-Supported Files

Radios with CD/MP3 have the capability of playing an MP3 CD-R or CD-RW disc.

Format

Radios that have the capability of playing MP3s can play .mp3 or .wma files that were recorded onto a CD-R or CD-RW disc. The files can be recorded with the following fixed bit rates: 32 kbps, 40 kbps, 56 kbps, 64 kbps, 80 kbps, 96 kbps, 112 kbps, 128 kbps, 160 kbps, 192 kbps, 224 kbps, 256 kbps, and 320 kbps or a variable bit rate.

Compressed Audio or Mixed Mode Discs

The radio can play discs that contain both uncompressed CD audio and MP3 files. If both formats are on the disc, the radio reads all MP3 files first, then the uncompressed CD audio files.

CD-R- or CD-RW-Supported File and Folder Structure

The radio supports:

- Up to 50 folders.
- Up to eight folders in depth.
- Up to 50 playlists.
- Up to 255 files.
- Playlists with an .m3u or .wpl extension.

- Files with an .mp3, .wma, or .cda file extension.

Root Directory

The root directory is treated as a folder. Files are stored in the root directory when the disc or storage device does not contain folders. Files accessed from the root directory of a CD display as F1 ROOT.

Empty Folder

Folders that do not contain files are skipped, and the player advances to the next folder that contains files.

Order of Play

Compressed audio files are accessed in the following order:

- Playlists (Px).
- Files stored in the root directory.
- Files stored in folders in the root directory.

Tracks are played in the following order:

- Play begins from the first track in the first playlist and continues sequentially through all tracks in each playlist. When the last track of the last playlist has played, play continues from the first track of the first playlist.
- Play begins from the first track in the first folder and continues sequentially through all tracks in each folder. When the last track of the last folder has played, play continues from the first track of the first folder.

File System and Naming

The song name that displays is the song name contained in the ID3 tag. If the song name is not present in the ID3 tag, then the radio displays the file name without the extension (such as .mp3) as the track name.

Track names longer than 32 characters or four pages are shortened. The display does not show parts of words on the last page of text, and the extension of the file name is not displayed.

Preprogrammed Playlists

CDs that have preprogrammed playlists created using WinAmp®, MusicMatch®, or RealPlayer® software can be accessed; however, there is no playlist-editing capability using the radio. These playlists are treated as special folders containing compressed audio song files.

Playlists that have an .m3u or .pls file extension and are stored on a USB device may be supported by the radio with a USB port.

Playlists can be changed by using the softkeys below the < 🗀 and 🗀 > tabs, the ♫ knob, the ⏮ SEEK button, or the ⏭ SEEK button. An MP3 CD-R or CD-RW that has been recorded without using file folders can be played. If a CD-R or CD-RW contains more than the maximum of 50 folders, 15 playlists, and 512 folders and files, the player

allows access and navigates up to the maximum, but all items over the maximum are not accessible.

Playing an MP3

i : Press to display additional text information related to the current song. If information is available, the song title information displays on the top line of the display and artist information displays on the bottom line. When information is not available, NO INFO displays.

♫ : Turn to select MP3s on the CD currently playing.

⏮ **SEEK :** Press to go to the start of the track, if more than 10 seconds have played. Press and hold or press multiple times to continue moving backward through tracks.

⏭ **SEEK :** Press to go to the next track. Press and hold or press multiple times to continue moving forward through tracks.

◁◁ **REV :** Press and hold to reverse playback quickly. Sound is heard at a reduced volume and the elapsed time of the file displays. Release ◁◁ REV to resume playing.

▷▷ **FWD :** Press and hold to advance playback quickly. Sound is heard at a reduced volume and the elapsed time of the file displays. Release ▷▷ FWD to resume playing. The elapsed time of the file displays.

< 🗀 : Press the softkey below the < 🗀 tab to go to the first track in the previous folder.

🗀 > : Press the softkey below the 🗀 > tab to go to the first track in the next folder.

RDM : For Radios with CD/MP3. Press to listen to tracks in random, rather than sequential order.

To use random:

1. Press the softkey under the RDM tab until Random Current Disc displays.
2. Press the softkey again to turn off random play.

⏲ : Press the softkey below the ⏲ tab to play the files in order by artist or album.

The player scans the disc to sort the files by artist and album ID3 tag information. It can take several minutes to scan the disc depending on the number of files on the disc. The radio may begin playing while it is scanning in the background.

When the scan is finished, the disc begins playing files in order by artist. The current artist playing is shown on the second line of the display. Once all songs by that artist are played, the player moves to the next artist in alphabetical order and begins playing files by that artist.

To listen to files by another artist, press the softkey below either arrow tab. The disc goes to the next or previous artist in alphabetical order. Continue pressing either softkey below the arrow tab until the desired artist displays.

To change from playback by artist to playback by album:

1. Press the softkey below the Sort By tab.
2. Press one of the softkeys below the Album tab from the sort screen.
3. Press the softkey below the Back tab to return to the main music navigator screen.

The album name displays on the second line between the arrows, and songs from the current album begin to play. Once all songs from that album have played, the player moves to the next album in alphabetical order on the CD and begins playing MP3s from that album.

To exit music navigator mode, press the softkey below the Back tab to return to normal MP3 playback.

CD Player Messages

CHECK DISC : If this message displays and/or the CD ejects, it could be for one of the following reasons:

- It is very hot. When the temperature returns to normal, the CD should play.
- The road is very rough. When the road becomes smoother, the CD should play.
- The CD is dirty, scratched, wet, or upside down.
- The air is very humid. If so, wait about an hour and try again.
- There was a problem while burning the CD.
- The label is caught in the CD player.

If the CD is not playing correctly, for any other reason, try a known good CD.

If any error occurs repeatedly or if an error cannot be corrected, contact your dealer. If the radio displays an error message, write it down and provide it to your dealer when reporting the problem.

Auxiliary Devices

Using the Auxiliary Input Jack

Radios with an auxiliary input jack on the lower right side can connect to an external audio device such as an iPod, MP3 player, or CD player for use as another source for audio listening. This input jack is not an audio output; do not plug headphones into the front auxiliary input jack.

Drivers are encouraged to set up any auxiliary device while the vehicle is in P (Park). See *Defensive Driving* ⇨ *163* for more information on driver distraction.

To use a portable audio player, connect a 3.5 mm (1/8 in) cable to the radio's front auxiliary input jack. When a device is connected, press the radio CD/AUX button to begin playing audio from the device over the vehicle speakers.

For optimal sound quality, increase the portable audio device's volume to the loudest level.

It is always best to power the portable audio device through its own battery while playing.

⏻ **:** Turn clockwise or counterclockwise to increase or decrease the volume of the portable player. Additional volume adjustments might have to be made from the portable device if the volume is not loud or soft enough.

BAND : If equipped, press to listen to the radio when a portable audio device is playing. The portable audio device continues playing.

CD/AUX : If equipped, press to play a CD when a portable audio device is playing. Press again and the system begins playing audio from the connected portable audio player. If a portable audio player is not connected, “No Input Device Found” displays.

SRCE : If equipped, press to listen to the radio when a portable audio device is playing. The portable audio device continues playing.

Press to play a CD when a portable audio device is playing. Press again and the system begins playing audio from the connected portable audio player. If a portable audio player is not connected, “No Input Device Found” displays.

Using the USB Port

Radios with a USB port can control a USB storage device or an iPod using the radio buttons and knobs. See “Playing an MP3” in *CD Player* ⇨ *138* for information about how to connect and control a USB storage device or an iPod.

USB Support

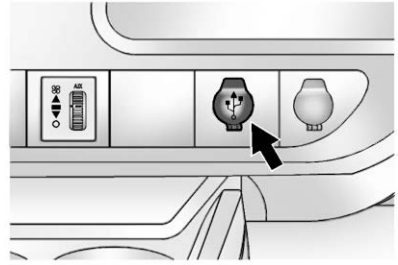

If equipped, the USB port is on the instrument panel and uses the USB 2.0 standard.

USB-Supported Devices

- USB flash drive
- Portable USB hard drive
- Fifth generation or later iPod
- iPod nano
- iPod touch
- iPod classic

Not all iPods and USB drives are compatible with the USB port.

Make sure the iPod has the latest firmware from Apple for proper operation. iPod firmware can be updated using the latest iTunes application. See www.apple.com/itunes.

For help with identifying the iPod, go to www.apple.com/support.

Radios that have a USB port can play .mp3 and .wma files that are stored on a USB storage device as well as AAC files that are stored on an iPod.

USB-Supported File and Folder Structure

The radio supports:

- Up to 700 folders.
- Up to eight folders in depth.
- Up to 65,535 files.
- Folder and file names up to 64 bytes.
- Files with an .mp3 or .wma file extension.
- AAC files stored on an iPod.
- FAT16.
- FAT32.

Connecting a USB Storage Device or iPod

The USB port can be used to control an iPod or a USB storage device.

To connect a USB storage device, connect the device to the USB port on the instrument panel.

To connect an iPod, connect one end of the USB cable that came with the iPod to the iPod's dock connector and connect the other end to the USB port on the instrument panel. If the vehicle is on and the USB connection works, "OK to disconnect" and a GM logo may appear on the iPod, and iPod appears on the infotainment display. The iPod music appears on the infotainment display and begins playing.

The iPod charges while it is connected to the vehicle if the ignition is on or in ACC/ACCESSORY. When the vehicle is turned off, the iPod automatically powers off and will not charge or draw power from the vehicle's battery.

If you have an older iPod model that is not supported, it can still be used by connecting it to the auxiliary input jack using a standard 3.5 mm (1/8 in) stereo cable. See "Using the Auxiliary Input Jack" previously in this section.

Using the Radio to Control a USB Storage Device or iPod

The radio can control a USB storage device or an iPod using the radio buttons and knobs, and can display song information on the infotainment display.

♫ **:** Turn to select files.

⏮ **SEEK :** Press to go to the start of the track, if more than 10 seconds have played. Press and hold or press multiple times to continue moving backward through tracks.

⏭ **SEEK :** Press to go to the next track. Press and hold or press multiple times to continue moving forward through tracks.

◁◁ **REV :** Press and hold to reverse playback quickly. Sound is heard at a reduced volume. Release ◁◁ REV to resume playing. The elapsed time of the file displays.

▷▷ **FWD :** Press and hold to advance playback quickly. Sound is heard at a reduced volume. Release ▷▷ FWD to resume playing. The elapsed time of the file displays.

i : Press to display additional information about the selected track.

Using Softkeys to Control a USB Storage Device or iPod

The five softkeys below the infotainment display are used to control the functions listed below.

To use the softkeys:

1. Press the first or fifth softkey below the infotainment display to display the functions listed below, or press the softkey below the function if it is currently displayed.
2. Press the softkey below the tab with the function on it to use that function.

II : Press the softkey below II to pause the track. The tab appears raised when pause is being used. Press the softkey below II again to resume playback.

Back : Press the softkey below the Back tab to go back to the main display screen on an iPod, or the root directory on a USB storage device.

🗀 **:** Press the softkeys below 🗀 to view the contents of the current folder on the USB drive. To browse and select files:

1. Press the softkey below 🗀.
2. Turn ♫ to scroll through the list of folders.
3. Press ♫ to select the desired folder. If there is more then one folder, repeat Steps 1 and 2 until the desired folder is reached.
4. Turn ♫ to scroll through the files in the selected folder.
5. Press ♫ to select the desired file to be played.

To skip through large lists, the five softkeys can be used to navigate in the following order:

- First softkey, first item in the list.
- Second softkey, 1% through the list each time the softkey is pressed.
- Third softkey, 5% through the list each time the softkey is pressed.
- Fourth softkey, 10% through the list each time the softkey is pressed.
- Fifth softkey, end of the list.

: Press the softkey below to view and select a file on an iPod, using the iPod's menu system. Files are sorted by:

- Playlists
- Artists
- Albums

- Genres
- Songs
- Composers

To select files:

1. Press the softkey below .
2. Turn ♫ to scroll through the list of menus.
3. Press ♫ to select the desired menu.
4. Turn ♫ to scroll through the folders or files in the selected menu.
5. Press ♫ to select the desired file to be played.

To skip through large lists, the five softkeys can be used to navigate in the following order:

- First softkey, first item in the list.
- Second softkey, 1% through the list each time the softkey is pressed.
- Third softkey, 5% through the list each time the softkey is pressed.
- Fourth softkey, 10% through the list each time the softkey is pressed.
- Fifth softkey, end of the list.

Repeat Functionality

To use Repeat:

Press the softkey below ⟲ or ⟲1 to select between Repeat All and Repeat Track.

⟲ **:** Press the softkey below ⟲ to repeat all tracks. The tab appears lowered when Repeat All is being used. This is the default mode when a USB storage device or iPod is first connected.

⟲1 **:** Press the softkey below ⟲1 to repeat one track. The tab appears raised when Repeat Track is being used.

Shuffle Functionality

To use Shuffle:

Press the softkey below ⇉, ⤮S, ⤮A , or ⤮F to select between Shuffle Off, Shuffle All Songs/ Shuffle Songs, Shuffle Album, or Shuffle Folder.

⇉ **:** Press the softkey below ⤮S to turn shuffle off. This is the default mode when a USB storage device or iPod is first connected.

⤮S **:** Press the softkey below ⤮F or ⤮A to shuffle all songs on the USB storage device or iPod.

⤮A **:** Press the softkey below ⇉ to shuffle all songs in the current album on an iPod.

⤮F **:** Press the softkey below ⇉ to shuffle all songs in the current folder on a USB storage device.

OnStar System

OnStar with 4G LTE

If equipped with OnStar 4G LTE, up to seven devices, such as smartphones, tablets, and laptops, can be connected to high-speed Internet through the vehicle's built-in Wi-Fi hotspot.

Call 1-888-4-ONSTAR (1-888-466-7827) to connect to an OnStar Advisor for assistance. See www.onstar.com for a detailed instruction guide, vehicle availability, details, and system limitations. Services and apps vary by make, model, year, carrier, availability, and conditions. 4G LTE service is available in select markets. 4G LTE performance is based on industry averages and vehicle systems design. Some services require a data plan.

Phone

Bluetooth

For vehicles equipped with Bluetooth capability, the system can interact with many cell phones, allowing:

- Placement and receipt of calls in a hands-free mode.
- Sharing of the cell phone's address book or contact list with the vehicle.

To minimize driver distraction, before driving, and with the vehicle parked:

- Become familiar with the features of the cell phone. Organize the phone book and contact lists clearly and delete duplicate or rarely used entries. If possible, program speed dial or other shortcuts.
- Review the controls and operation of the infotainment system.

- Pair cell phone(s) to the vehicle. The system may not work with all cell phones. See “Pairing” in this section for more information.
- If the cell phone has voice dialing capability, learn to use that feature to access the address book or contact list. See “Voice Pass-Thru” in this section for more information.
- See “Storing and Deleting Phone Numbers” in this section for more information.

⚠ Warning

When using a cell phone, it can be distracting to look too long or too often at the screen of the phone or the infotainment system. Taking your eyes off the road too long or too often could cause a crash resulting in injury or death. Focus your attention on driving.

A Bluetooth system can use a Bluetooth-capable cell phone with a Hands-Free Profile to make and receive phone calls. The system can be used while the ignition is on or in ACC/ACCESSORY. The range of the Bluetooth system can be up to 9.1 m (30 ft). Not all phones support all functions, and not all phones work with the in-vehicle Bluetooth system. See www.gm.com/bluetooth for more information on compatible phones in U.S. and Canada only.

Voice Recognition

The Bluetooth system uses voice recognition to interpret voice commands to dial phone numbers and name tags.

For additional information, say “Help” while you are in a voice recognition menu.

Noise : Keep interior noise levels to a minimum. The system may not recognize voice commands if there is too much background noise.

When to Speak : A short tone sounds after the system responds indicating when it is waiting for a voice command. Wait until the tone and then speak.

How to Speak : Speak clearly in a calm and natural voice.

Audio System

When using the in-vehicle Bluetooth system, sound comes through the vehicle's front audio system speakers and overrides the audio system. Use the audio system volume knob, during a call, to change the volume level. The adjusted volume level remains in memory for later calls. To prevent missed calls, a minimum volume level is used if the volume is turned down too low.

Bluetooth Controls

Use the buttons on the steering wheel to operate the in-vehicle Bluetooth system. See *Steering Wheel Controls* ⇨ *91*.

**/ : Press to answer incoming calls, confirm system information, and start speech recognition.

**/ ▽ : Press to end a call, reject a call, or cancel an operation.

Pairing

A Bluetooth-enabled cell phone must be paired to the Bluetooth system and then connected to the vehicle before it can be used. See the cell phone manufacturer's user guide for Bluetooth functions before pairing the cell phone. If a Bluetooth phone is not connected, calls will be made using OnStar Hands-Free Calling, if equipped. See *OnStar Overview* ⇨ *332*.

Pairing Information

- A Bluetooth phone with MP3 capability cannot be paired to the vehicle as a phone and an MP3 player at the same time.
- Up to five cell phones can be paired to the Bluetooth system.
- The pairing process is disabled when the vehicle is moving.
- Pairing only needs to be completed once, unless the pairing information on the cell phone changes or the cell phone is deleted from the system.
- Only one paired cell phone can be connected to the Bluetooth system at a time.
- If multiple paired cell phones are within range of the system, the system connects to the first available paired cell phone in the order that they were first paired to the system. To connect to a different paired phone, see “Connecting to a Different Phone” later in this section.

Pairing a Phone

1. Press and hold ✆ / ⏯ for two seconds.
2. Say “Bluetooth.” This command can be skipped.
3. Say “Pair.” The system responds with instructions and a four-digit Personal Identification Number (PIN). The PIN is used in Step 5.
4. Start the pairing process on the cell phone that you want to pair. For help with this process, see the cell phone manufacturer's user guide.
5. Locate the device named “Your Vehicle” in the list on the cell phone. Follow the instructions on the cell phone to enter the PIN provided in Step 3. After the PIN is successfully entered, the system prompts you to provide a name for the paired cell phone. This name will be used to indicate which phones are paired and connected to the vehicle. The system responds with “<phone name> has been successfully paired” after the pairing process is complete.
6. Repeat Steps 1–5 to pair additional phones.

Listing All Paired and Connected Phones

The system can list all cell phones paired to it. If a paired cell phone is also connected to the vehicle, the system responds with “is connected” after that phone name.

1. Press and hold ✆ / ⏯ for two seconds.

2. Say “Bluetooth.”
3. Say “List.”

Deleting a Paired Phone

If the phone name you want to delete is unknown, see “Listing All Paired and Connected Phones.”

1. Press and hold ✆ / 🗣 for two seconds.
2. Say “Bluetooth.”
3. Say “Delete.” The system asks which phone to delete.
4. Say the name of the phone you want to delete.

Connecting to a Different Phone

To connect to a different cell phone, the Bluetooth system looks for the next available cell phone in the order in which all the available cell phones were paired. Depending on which cell phone you want to connect to, you may have to use this command several times.

1. Press and hold ✆ / 🗣 for two seconds.
2. Say “Bluetooth.”
3. Say “Change phone.”
   - If another cell phone is found, the response will be “<Phone name> is now connected.”
   - If another cell phone is not found, the original phone remains connected.

Storing and Deleting Phone Numbers

The system can store up to 30 phone numbers as name tags in the Hands-Free Directory that is shared between the Bluetooth and OnStar systems, if equipped.

The following commands are used to delete and store phone numbers.

Store : This command will store a phone number, or a group of numbers as a name tag.

Digit Store : This command allows a phone number to be stored as a name tag by entering the digits one at a time.

Delete : This command is used to delete individual name tags.

Delete All Name Tags : This command deletes all stored name tags in the Hands-Free Calling Directory and the OnStar Turn-by-Turn Destinations Directory, if equipped.

Using the “Store” Command

1. Press and hold ✆ / 🗣 for two seconds.
2. Say “Store.”
3. Say the phone number or group of numbers you want to store all at once with no pauses, then follow the directions given by the system to save a name tag for this number.

Using the “Digit Store” Command

If an unwanted number is recognized by the system, say “Clear” at any time to clear the last number.

To hear all of the numbers recognized by the system, say “Verify” at any time.

1. Press and hold ✆ / ⌇ for two seconds.
2. Say “Digit Store.”
3. Say each digit, one at a time, that you want to store. After each digit is entered, the system repeats back the digit it heard followed by a tone. After the last digit has been entered, say “Store,” and then follow the directions given by the system to save a name tag for this number.

Using the “Delete” Command

1. Press and hold ✆ / ⌇ for two seconds.
2. Say “Delete.”
3. Say the name tag you want to delete.

Using the “Delete All Name Tags” Command

This command deletes all stored name tags in the Hands-Free Calling Directory and the OnStar Turn-by-Turn Destinations Directory, if equipped.

To delete all name tags:

1. Press and hold ✆ / ⌇ for two seconds.
2. Say “Delete all name tags.”

Listing Stored Numbers

The list command will list all stored numbers and name tags.

Using the “List” Command

1. Press and hold ✆ / ⌇ for two seconds.
2. Say “Directory.”
3. Say “Hands-Free Calling.”
4. Say “List.”

Making a Call

Calls can be made using the following commands.

Dial or Call : The dial or call command can be used interchangeably to dial a phone number or a stored name tag.

Digit Dial : This command allows a phone number to be dialed by entering the digits one at a time.

Re-dial : This command is used to dial the last number used on the cell phone.

Using the “Dial” or “Call” Command

1. Press and hold ✆ / ⌇ for two seconds.
2. Say “Dial” or “Call.”
3. Say the entire number without pausing, or say the name tag.

Once connected, the person called will be heard through the audio speakers.

Calling Emergency

1. Press and hold ✆ / ⌇ for two seconds. The system responds “Ready,” followed by a tone.

2. Say “Dial” or “Call.”
3. Say [emergency number].
4. Say “Dial” or “Call.”

Once connected, the person called will be heard through the audio speakers.

Using the “Digit Dial” Command

The digit dial command allows a phone number to be dialed by entering the digits one at a time. After each digit is entered, the system repeats back the digit it heard followed by a tone.

If an unwanted number is recognized by the system, say “Clear” at any time to clear the last number.

To hear all of the numbers recognized by the system, say “Verify” at any time.

1. Press and hold / for two seconds.
2. Say “Digit Dial.”
3. Say each digit, one at a time, that you want to dial. After each digit is entered, the system repeats back the digit it heard followed by a tone. After the last digit has been entered, say “Dial.”

Once connected, the person called will be heard through the audio speakers.

Using the “Re-dial” Command

1. Press and hold / for two seconds.
2. After the tone, say “Re-dial.”

Once connected, the person called will be heard through the audio speakers.

Receiving a Call

When an incoming call is received, the audio system mutes and a ring tone is heard in the vehicle.

- Press / to answer the call.
- Press / ▽ to ignore a call.

Call Waiting

Call waiting must be supported on the cell phone and enabled by the wireless service carrier.

- Press / to answer an incoming call when another call is active. The original call is placed on hold.
- Press / again to return to the original call.
- To ignore the incoming call, no action is required.
- Press / ▽ to disconnect the current call and switch to the call on hold.

Three-Way Calling

Three-way calling must be supported on the cell phone and enabled by the wireless service carrier.

1. While on a call, press / .
2. Say “Three-way call.”

3. Use the dial or call command to dial the number of the third party to be called.
4. Once the call is connected, press ✆ / 🗣 to link all callers together.

Ending a Call

Press ☎ / ▽ to end a call.

Muting a Call

During a call, all sounds from inside the vehicle can be muted so that the person on the other end of the call cannot hear them.

- To mute a call, press ✆ / 🗣 , and then say “Mute call.”
- To cancel mute, press ✆ / 🗣 , and then say “Un-mute call.”

Transferring a Call

Audio can be transferred between the Bluetooth system and the cell phone.

The cell phone must be paired and connected with the Bluetooth system before a call can be transferred. The connection process can take up to two minutes after the ignition is turned to on.

Transferring Audio from the Bluetooth System to a Cell Phone

During a call with the audio in the vehicle:

1. Press ✆ / 🗣.
2. Say “Transfer Call.”

Transferring Audio to the Bluetooth System from a Cell Phone

During a call with the audio on the cell phone, press ✆ / 🗣. The audio transfers to the vehicle. If the audio does not transfer to the vehicle, use the audio transfer feature on the cell phone. See your cell phone manufacturer's user guide for more information.

Voice Pass-Thru

Voice pass-thru allows access to the voice recognition commands on the cell phone. See your cell phone manufacturer's user guide to see if the cell phone supports this feature.

To access contacts stored in the cell phone:

1. Press and hold ✆ / 🗣 for two seconds.
2. Say “Bluetooth.” This command can be skipped.
3. Say “Voice.” The system responds “OK, accessing <phone name>.”

The cell phone's normal prompt messages will go through their cycle according to the phone's operating instructions.

Dual Tone Multi-Frequency (DTMF) Tones

The Bluetooth system can send numbers and the numbers stored as name tags during a call. You can use this feature when calling a

menu-driven phone system. Account numbers can also be stored for use.

Sending a Number or Name Tag During a Call

1. Press ✆ / ⁂. The system responds “Ready,” followed by a tone.
2. Say “Dial.”
3. Say the number or name tag to send.

Clearing the System

Unless information is deleted out of the in-vehicle Bluetooth system, it will be retained indefinitely. This includes all saved name tags in the phone book and phone pairing information. For information on how to delete this information, see the previous section “Deleting a Paired Phone” and the previous sections on deleting name tags.

Other Information

The Bluetooth word mark and logos are owned by the Bluetooth SIG, Inc. and any use of such marks by General Motors is under license. Other trademarks and trade names are those of their respective owners.

See *Radio Frequency Statement* ⇨ *328*.

Climate Controls

Climate Control Systems
Climate Control Systems 156
Rear Heating System 158
Rear Climate Control System 158

Air Vents
Air Vents 161

Maintenance
Service 161

Climate Control Systems

The heating, cooling, and ventilation for the vehicle can be controlled with this system.

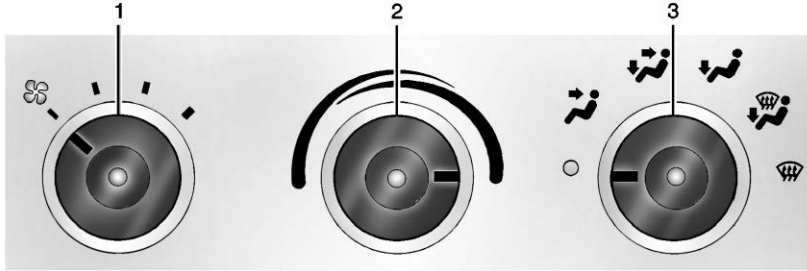

Vehicles without Air Conditioning

1. Fan Control
2. Temperature Control
3. Air Delivery Mode Control

: Turn the knob clockwise or counterclockwise to increase or decrease the fan speed.

: Turns the system off.

Temperature Control : Turn the knob clockwise or counterclockwise to increase or decrease the temperature inside the vehicle.

Air Delivery Mode Control : Turn the knob clockwise or counterclockwise to change the current airflow mode.

: Air is directed to the instrument panel outlets.

: Air is divided between the instrument panel and floor outlets, with some air directed toward the windshield.

: Air is directed to the floor outlets with some air directed to the windshield and side windows.

: This mode clears the windows of fog or moisture. Outside air is directed to the floor and defroster outlets. Adjust the temperature knob for warmer or cooler air. The air conditioning compressor might turn on in this setting to dehumidify the air.

: This mode clears the windshield of fog or frost more quickly. Air is directed to the windshield, with some to the floor outlets and front side windows. The air conditioning compressor might turn on in this setting to dehumidify the air.

Do not drive the vehicle until all the windows are clear.

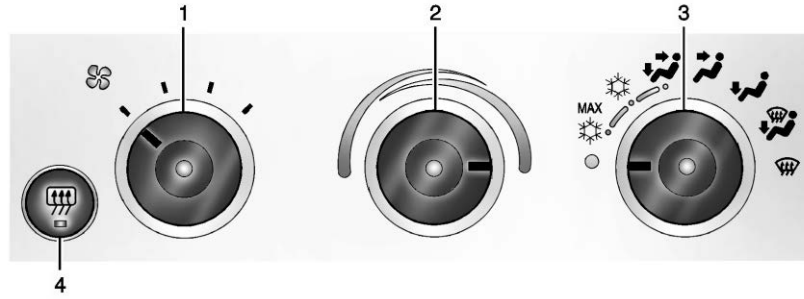

Vehicles with Air Conditioning

1. Fan Control
2. Temperature Control
3. Air Delivery Mode Control
4. Rear Window Defogger (If Equipped)

On hot days, open the windows to let hot inside air escape; then close them. This helps to reduce the time needed for the vehicle to cool down and the system operates more efficiently.

: Cools and dehumidifies the air inside of the vehicle.

MAX : Cools the air inside the vehicle faster, by recirculating the inside air.

Rear Window Defogger

If equipped with a rear window defogger, a warming grid is used to remove fog or frost from the rear window.

: Press to turn the rear window defogger on or off. An indicator light on the button comes on to show that the rear window defogger is on.

The defogger only works when the ignition is on. The defogger turns off if the ignition is turned off or to ACC/ACCESSORY.

Do not drive the vehicle until all the windows are clear.

Caution
Do not use a razor blade or sharp object to clear the inside rear window. Do not adhere anything to the defogger grid lines in the rear glass. These actions may damage the rear defogger. Repairs would not be covered by the vehicle warranty.

Rear Heating System

If equipped, the rear heating system lets you adjust the amount of air flowing into the rear of the vehicle, from the front seating area. This feature works with the main climate control system in the vehicle.

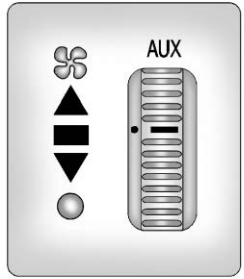

AUX : The thumbwheel for this system is on the instrument panel below the audio system.

: Turn the thumbwheel up or down to increase or decrease the amount of heated air sent to the rear seating area.

▲ **:** This position supplies the most amount of heat to the rear seating area.

■ **:** This position supplies half the amount of heat to the rear seating area.

▼ **:** This position supplies the least amount of heat to the rear seating area.

○ **:** This turns the rear heating system off.

Rear Climate Control System

If equipped with a rear heating and air conditioning system, it controls the temperature, fan speed, and air delivery for the rear seat passengers only. The front climate control panel is in the overhead console between the driver and front passenger.

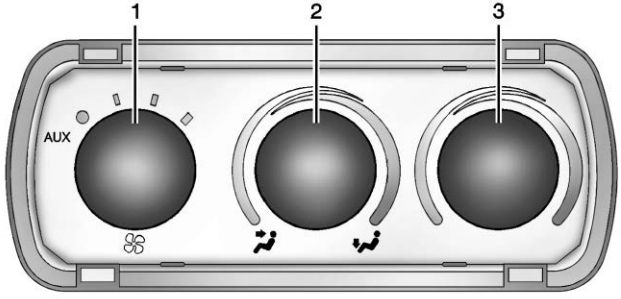

Front Climate Control Panel

1. Fan Control
2. Air Delivery Mode Control
3. Temperature Control

Use this control panel to maintain a separate temperature setting. Adjust the direction of the airflow or adjust the fan speed for the rear seat passenger(s).

When the fan knob is in the AUX position, the rear climate control panel can be used to adjust the climate settings in the rear seating area.

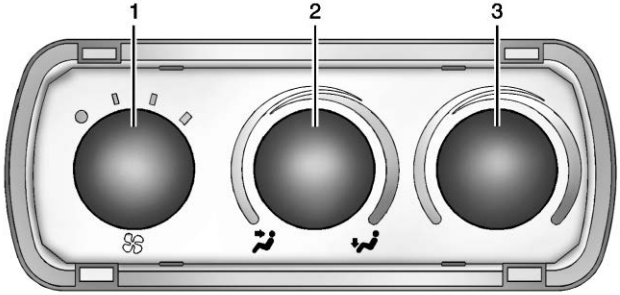

Rear Climate Control Panel

1. Fan Control
2. Air Delivery Mode Control
3. Temperature Control

For vehicles with a rear climate control panel, it is located overhead behind the driver and front passenger, centered in front of the second row. To adjust the rear climate control panel settings by a rear seat passenger, the front climate control panel fan knob must be in the AUX position. The fan speed, air delivery mode, and temperature can then be adjusted.

AUX : Turn the fan knob on the front climate control panel to AUX to let rear seat passengers use the control panel in the rear seating area. This disables the front control panel. To return control to the front panel, move the fan knob out of AUX.

: Turns the system off.

: Turn clockwise or counterclockwise to increase or decrease the fan speed in the rear seating area.

Temperature Control : Turn clockwise or counterclockwise to increase or decrease the temperature in the rear seating area.

The air conditioning system on the main climate control panel must be turned on to direct cooled air to the rear of the vehicle. If it is not on, then the temperature in the rear of the vehicle remains at cabin temperature.

Air Delivery Mode Control : Turn clockwise or counterclockwise to change the direction of the airflow in the rear seating area.

To change the current mode, select one of the following:

: Air is directed to the upper outlets, with some directed to the floor outlets.

: Air is directed to the floor outlets.

Be sure to keep the area under the front seats clear of any objects so that the air inside of the vehicle can circulate effectively.

For information on how to use the main climate control system, see *Climate Control Systems* ⇨ *156*. For information on ventilation, see *Air Vents* ⇨ *161*.

Air Vents

Use the outlets located near the center and on the sides of the instrument panel to change the direction of airflow.

Operation Tips

- Clear away any ice, snow or leaves from the air inlets at the base of the windshield that may block the flow of air into the vehicle.
- Use of non-GM approved hood deflectors may adversely affect the performance of the system.
- Clear snow off the hood to improve visibility and help decrease moisture drawn into the vehicle.
- Keep the path under the front seats clear of objects to help circulate the air inside of the vehicle more effectively.

Maintenance

Service

All vehicles have a label underhood that identifies the refrigerant used in the vehicle. The refrigerant system should only be serviced by trained and certified technicians. The air conditioning evaporator should never be repaired or replaced by one from a salvage vehicle.
It should only be replaced by a new evaporator to ensure proper and safe operation.

During service, all refrigerants should be reclaimed with proper equipment. Venting refrigerants directly to the atmosphere is harmful to the environment and may also create unsafe conditions based on inhalation, combustion, frostbite, or other health-based concerns.

Driving and Operating

Driving Information
Distracted Driving 163
Defensive Driving 163
Drunk Driving 164
Control of a Vehicle 164
Braking 164
Steering 164
Off-Road Recovery 165
Loss of Control 165
Driving on Wet Roads 166
Hill and Mountain Roads 167
Winter Driving 167
If the Vehicle Is Stuck 169
Vehicle Load Limits 169

Starting and Operating
New Vehicle Break-In 173
Ignition Positions 174
Starting the Engine 175
Fast Idle System 176
Retained Accessory Power (RAP) 177
Engine Coolant Heater 177
Shifting Into Park 179
Shifting out of Park 180
Parking over Things That Burn 180

Engine Exhaust
Engine Exhaust 181
Running the Vehicle While Parked 181

Automatic Transmission
Automatic Transmission 182
Manual Mode 185
Tow/Haul Mode 185

Brakes
Antilock Brake System (ABS) 186
Parking Brake 187
Brake Assist 188
Hill Start Assist (HSA) 188

Ride Control Systems
Traction Control/Electronic Stability Control 188
Locking Rear Axle 190

Cruise Control
Cruise Control 191

Driver Assistance Systems
Rear Vision Camera (RVC) . . . 193
Parking Assist 194
Side Blind Zone Alert (SBZA) 195

Fuel
Fuel 197
California Fuel Requirements 198
Fuels in Foreign Countries . . . 198
Fuel Additives 198
E85 or FlexFuel 199
Filling the Tank 200
Filling a Portable Fuel Container 201

Trailer Towing
General Towing Information 202
Driving Characteristics and Towing Tips 202
Trailer Towing 205
Towing Equipment 209
Trailer Sway Control (TSC) . . . 211

Conversions and Add-Ons
Add-On Electrical Equipment 212

Driving Information

Distracted Driving

Distraction comes in many forms and can take your focus from the task of driving. Exercise good judgment and do not let other activities divert your attention away from the road. Many local governments have enacted laws regarding driver distraction. Become familiar with the local laws in your area.

To avoid distracted driving, keep your eyes on the road, keep your hands on the steering wheel, and focus your attention on driving.

- Do not use a phone in demanding driving situations. Use a hands-free method to place or receive necessary phone calls.
- Watch the road. Do not read, take notes, or look up information on phones or other electronic devices.
- Designate a front seat passenger to handle potential distractions.
- Become familiar with vehicle features before driving, such as programming favorite radio stations and adjusting climate control and seat settings. Program all trip information into any navigation device prior to driving.
- Wait until the vehicle is parked to retrieve items that have fallen to the floor.
- Stop or park the vehicle to tend to children.
- Keep pets in an appropriate carrier or restraint.
- Avoid stressful conversations while driving, whether with a passenger or on a cell phone.

⚠ Warning

Taking your eyes off the road too long or too often could cause a crash resulting in injury or death. Focus your attention on driving.

Refer to the infotainment section for more information on using that system and the navigation system, if equipped, including pairing and using a cell phone.

Defensive Driving

Defensive driving means “always expect the unexpected.” The first step in driving defensively is to wear the seat belt. See *Seat Belts* ⇨ *47*.

- Assume that other road users (pedestrians, bicyclists, and other drivers) are going to be careless and make mistakes. Anticipate what they might do and be ready.
- Allow enough following distance between you and the driver in front of you.

- Focus on the task of driving.

Drunk Driving

Death and injury associated with drinking and driving is a global tragedy.

⚠ Warning

Drinking and then driving is very dangerous. Your reflexes, perceptions, attentiveness, and judgment can be affected by even a small amount of alcohol. You can have a serious — or even fatal — collision if you drive after drinking.

Do not drink and drive or ride with a driver who has been drinking. Ride home in a cab; or if you are with a group, designate a driver who will not drink.

Control of a Vehicle

Braking, steering, and accelerating are important factors in helping to control a vehicle while driving.

Braking

Braking action involves perception time and reaction time. Deciding to push the brake pedal is perception time. Actually doing it is reaction time.

Average driver reaction time is about three-quarters of a second. In that time, a vehicle moving at 100 km/h (60 mph) travels 20 m (66 ft), which could be a lot of distance in an emergency.

Helpful braking tips to keep in mind include:

- Keep enough distance between you and the vehicle in front of you.
- Avoid needless heavy braking.
- Keep pace with traffic.

If the engine ever stops while the vehicle is being driven, brake normally but do not pump the brakes. Doing so could make the pedal harder to push down. If the engine stops, there will be some power brake assist but it will be used when the brake is applied. Once the power assist is used up, it can take longer to stop and the brake pedal will be harder to push.

Steering

Hydraulic Power Steering

Your vehicle has hydraulic power steering. It may require maintenance. See *Power Steering Fluid* ⇨ *235*.

If power steering assist is lost because the engine stops or because of a system malfunction, the vehicle can be steered but may require increased effort. See your dealer if there is a problem.

Caution

If the steering wheel is turned until it reaches the end of its travel, and is held in that position for more than 15 seconds, damage may occur to the power steering system and there may be loss of power steering assist.

Curve Tips

- Take curves at a reasonable speed.
- Reduce speed before entering a curve.
- Maintain a reasonable steady speed through the curve.
- Wait until the vehicle is out of the curve before accelerating gently into the straightaway.

Steering in Emergencies

- There are some situations when steering around a problem may be more effective than braking.
- Holding both sides of the steering wheel allows you to turn 180 degrees without removing a hand.
- Antilock Brake System (ABS) allows steering while braking.

Off-Road Recovery

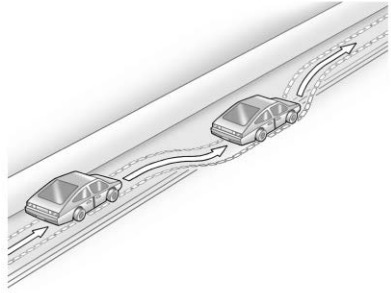

The vehicle's right wheels can drop off the edge of a road onto the shoulder while driving. Follow these tips:

1. Ease off the accelerator and then, if there is nothing in the way, steer the vehicle so that it straddles the edge of the pavement.
2. Turn the steering wheel about one-eighth of a turn, until the right front tire contacts the pavement edge.
3. Turn the steering wheel to go straight down the roadway.

Loss of Control

Skidding

There are three types of skids that correspond to the vehicle's three control systems:

- Braking Skid — wheels are not rolling.
- Steering or Cornering Skid — too much speed or steering in a curve causes tires to slip and lose cornering force.
- Acceleration Skid — too much throttle causes the driving wheels to spin.

Defensive drivers avoid most skids by taking reasonable care suited to existing conditions, and by not overdriving those conditions. But skids are always possible.

If the vehicle starts to slide, follow these suggestions:

- Ease your foot off the accelerator pedal and steer the way you want the vehicle to go. The vehicle may straighten out. Be ready for a second skid if it occurs.
- Slow down and adjust your driving according to weather conditions. Stopping distance can be longer and vehicle control can be affected when traction is reduced by water, snow, ice, gravel, or other material on the road. Learn to recognize warning clues — such as enough water, ice, or packed snow on the road to make a mirrored surface — and slow down when you have any doubt.
- Try to avoid sudden steering, acceleration, or braking, including reducing vehicle speed by shifting to a lower gear. Any sudden changes could cause the tires to slide.

Remember: Antilock brakes help avoid only the braking skid.

Driving on Wet Roads

Rain and wet roads can reduce vehicle traction and affect your ability to stop and accelerate. Always drive slower in these types of driving conditions and avoid driving through large puddles and deep-standing or flowing water.

⚠ Warning

Wet brakes can cause crashes. They might not work as well in a quick stop and could cause pulling to one side. You could lose control of the vehicle.

After driving through a large puddle of water or a car/vehicle wash, lightly apply the brake pedal until the brakes work normally.

(Continued)

Warning (Continued)

Flowing or rushing water creates strong forces. Driving through flowing water could cause the vehicle to be carried away. If this happens, you and other vehicle occupants could drown. Do not ignore police warnings and be very cautious about trying to drive through flowing water.

Hydroplaning

Hydroplaning is dangerous. Water can build up under the vehicle's tires so they actually ride on the water. This can happen if the road is wet enough and you are going fast enough. When the vehicle is hydroplaning, it has little or no contact with the road.

There is no hard and fast rule about hydroplaning. The best advice is to slow down when the road is wet.

Other Rainy Weather Tips

Besides slowing down, other wet weather driving tips include:

- Allow extra following distance.
- Pass with caution.
- Keep windshield wiping equipment in good shape.
- Keep the windshield washer fluid reservoir filled.
- Have good tires with proper tread depth. See *Tires* ⇨ *255*.
- Turn off cruise control.

Hill and Mountain Roads

Driving on steep hills or through mountains is different than driving on flat or rolling terrain. Tips include:

- Keep the vehicle serviced and in good shape.
- Check all fluid levels and brakes, tires, cooling system, and transmission.
- Shift to a lower gear when going down steep or long hills.

⚠ Warning

Using the brakes to slow the vehicle on a long downhill slope can cause brake overheating, can reduce brake performance, and could result in a loss of braking. Shift the transmission to a lower gear to let the engine assist the brakes on a steep downhill slope.

⚠ Warning

Coasting downhill in N (Neutral) or with the ignition off is dangerous. This can cause overheating of the brakes and loss of steering assist. Always have the engine running and the vehicle in gear.

- Drive at speeds that keep the vehicle in its own lane. Do not swing wide or cross the center line.
- Be alert on top of hills; something could be in your lane (e.g., stalled car, accident).
- Pay attention to special road signs (e.g., falling rocks area, winding roads, long grades, passing or no-passing zones) and take appropriate action.

Winter Driving

Driving on Snow or Ice

Snow or ice between the tires and the road creates less traction or grip, so drive carefully. Wet ice can occur at about 0 °C (32 °F) when freezing rain begins to fall. Avoid driving on wet ice or in freezing rain until roads can be treated.

For slippery road driving:

- Accelerate gently. Accelerating too quickly causes the wheels to spin and makes the surface under the tires slick.
- Turn on Traction Control. See *Traction Control/Electronic Stability Control* ⇨ *188*.

- Antilock Brake System (ABS) improves vehicle stability during hard stops, but the brakes should be applied sooner than when on dry pavement. See *Antilock Brake System (ABS)* ⇨ *186*.
- Allow greater following distance and watch for slippery spots. Icy patches can occur on otherwise clear roads in shaded areas. The surface of a curve or an overpass can remain icy when the surrounding roads are clear. Avoid sudden steering maneuvers and braking while on ice.
- Turn off cruise control.

Blizzard Conditions

Stop the vehicle in a safe place and signal for help. Stay with the vehicle unless there is help nearby.
If possible, use Roadside Assistance. See *Roadside Assistance Program* ⇨ *322*. To get help and keep everyone in the vehicle safe:

- Turn on the hazard warning flashers.
- Tie a red cloth to an outside mirror.

⚠ Warning

Snow can trap engine exhaust under the vehicle. This may cause exhaust gases to get inside. Engine exhaust contains carbon monoxide (CO), which cannot be seen or smelled. It can cause unconsciousness and even death.

(Continued)

Warning (Continued)

If the vehicle is stuck in snow:

- Clear snow from the base of the vehicle, especially any blocking the exhaust pipe.
- Open a window about 5 cm (2 in) on the vehicle side that is away from the wind, to bring in fresh air.
- Fully open the air outlets on or under the instrument panel.
- Adjust the climate control system to circulate the air inside the vehicle and set the fan speed to the highest setting. See “Climate Control Systems.”

For more information about CO, see *Engine Exhaust* ⇨ *181*.

To save fuel, run the engine for short periods to warm the vehicle and then shut the engine off and partially close the window. Moving about to keep warm also helps.

If it takes time for help to arrive, when running the engine, push the accelerator pedal slightly so the engine runs faster than the idle speed. This keeps the battery charged to restart the vehicle and to signal for help with the headlamps. Do this as little as possible, to save fuel.

If the Vehicle Is Stuck

Slowly and cautiously spin the wheels to free the vehicle when stuck in sand, mud, ice, or snow.

If stuck too severely for the traction system to free the vehicle, turn the traction system off and use the rocking method. See *Traction Control/Electronic Stability Control* ⇨ *188*.

⚠ Warning

If the vehicle's tires spin at high speed, they can explode, and you or others could be injured. The vehicle can overheat, causing an engine compartment fire or other damage. Spin the wheels as little as possible and avoid going above 56 km/h (35 mph).

Rocking the Vehicle to Get it Out

Turn the steering wheel left and right to clear the area around the front wheels. Turn off any traction system. Shift back and forth between R (Reverse) and a low forward gear, spinning the wheels as little as possible. To prevent transmission wear, wait until the wheels stop spinning before shifting gears. Release the accelerator pedal while shifting, and press lightly on the accelerator pedal when the transmission is in gear. Slowly spinning the wheels in the forward and reverse directions causes a rocking motion that could free the vehicle. If that does not get the vehicle out after a few tries, it might need to be towed out. If the vehicle does need to be towed out, see *Towing the Vehicle* ⇨ *289*.

Vehicle Load Limits

It is very important to know how much weight the vehicle can carry. This weight is called the vehicle capacity weight and includes the weight of all occupants, cargo, and all nonfactory-installed options. Two labels on the vehicle may show how much weight it was designed to carry, the Tire and Loading Information label and the Certification/Tire label.

⚠ Warning

Do not load the vehicle any heavier than the Gross Vehicle Weight Rating

(Continued)

Warning (Continued)

(GVWR), or either the maximum front or rear Gross Axle Weight Rating (GAWR). This can cause systems to break and change the way the vehicle handles. This could cause loss of control and a crash. Overloading can also reduce stopping distance, damage the tires, and shorten the life of the vehicle.

Tire and Loading Information Label

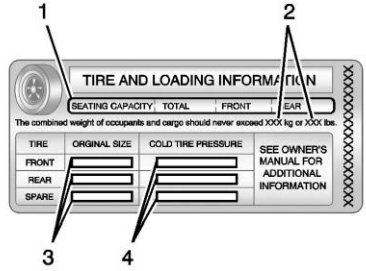

Label Example

A vehicle specific Tire and Loading Information label is attached to the center pillar (B-pillar). The tire and loading information label shows the number of occupant seating positions (1), and the maximum vehicle capacity weight (2) in kilograms and pounds.

The Tire and Loading Information label also shows the size of the original equipment tires (3) and the recommended cold tire inflation pressures (4). For more information on tires and inflation see *Tires* ⇨ *255* and *Tire Pressure* ⇨ *263*.

There is also important loading information on the vehicle Certification/Tire label. It may show the Gross Vehicle Weight Rating (GVWR) and the Gross Axle Weight Rating (GAWR) for the front and rear axle. See “Certification/Tire Label” later in this section.

“Steps for Determining Correct Load Limit–

1. Locate the statement "The combined weight of occupants and cargo should never exceed XXX kg or XXX lbs." on your vehicle’s placard.
2. Determine the combined weight of the driver and passengers that will be riding in your vehicle.

3. Subtract the combined weight of the driver and passengers from XXX kg or XXX lbs.
4. The resulting figure equals the available amount of cargo and luggage load capacity. For example, if the "XXX" amount equals 1400 lbs. and there will be five 150 lb passengers in your vehicle, the amount of available cargo and luggage load capacity is 650 lbs. (1400-750 (5 x 150) = 650 lbs.)
5. Determine the combined weight of luggage and cargo being loaded on the vehicle. That weight may not safely exceed the available cargo and luggage load capacity calculated in Step 4.
6. If your vehicle will be towing a trailer, load from your trailer will be transferred to your vehicle. Consult this manual to determine how this reduces the available cargo and luggage load capacity of your vehicle."

See *Trailer Towing* ⇨ *205* for important information on towing a trailer, towing safety rules and trailering tips.

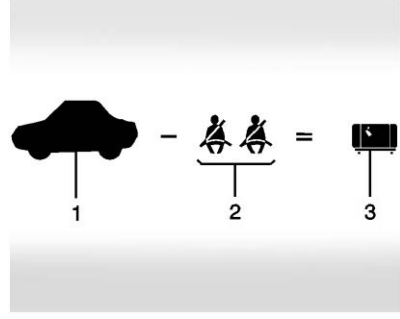

Example 1

1. Vehicle Capacity Weight for Example 1 = 453 kg (1,000 lbs)
2. Subtract Occupant Weight @ 68 kg (150 lbs) × 2 = 136 kg (300 lbs)
3. Available Occupant and Cargo Weight = 317 kg (700 lbs)

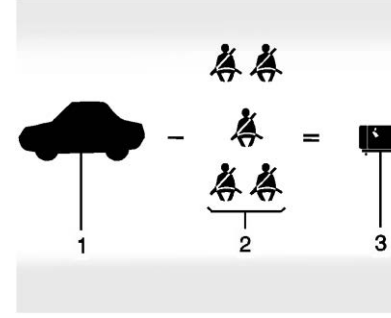

Example 2

A. Vehicle Capacity Weight for Example 2 = 453 kg (1,000 lbs)
B. Subtract Occupant Weight @ 68 kg (150 lbs) × 5 = 136 kg (750 lbs)
C. Available Cargo Weight = 113 kg (250 lbs)

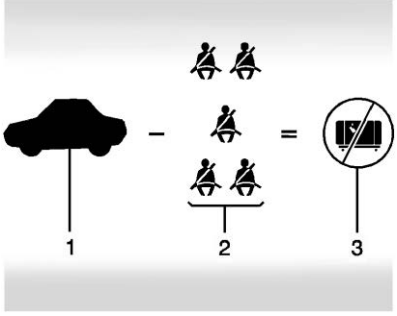

Example 3

1. Maximum Vehicle Capacity Weight for Example 3 = 453 kg (1,000 lbs)
2. Subtract Occupant Weight @ 91 kg (200 lbs) × 5 = 453 kg (1,000 lbs)
3. Available Cargo Weight = 0 kg (0 lbs)

Refer to the vehicle tire and loading information label for specific information about the vehicle's capacity weight and seating positions. The combined weight of the driver, passengers, and cargo should never exceed the vehicle capacity weight.

Certification/Tire Label

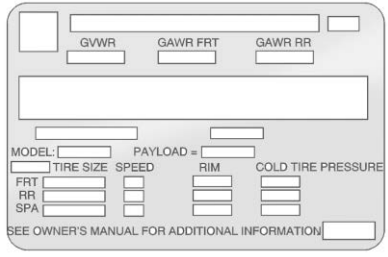

A vehicle specific Certification/Tire label is attached to the rear edge of the driver door. The label may show the size of the vehicle's original tires and the inflation pressures needed to obtain the gross weight capacity of the vehicle. This is called Gross Vehicle Weight Rating (GVWR). The GVWR includes the weight of the vehicle, all occupants, fuel, and cargo.

The Certification/Tire label also may show the maximum weights for the front and rear axles, called Gross Axle Weight Rating (GAWR). To find out the actual loads on the front and rear axles, you need to go to a weigh station and weigh the vehicle. Your dealer can help you with this. Be sure to spread out the load equally on both sides of the centerline.

⚠ Warning

Things you put inside the vehicle can strike and injure people in a sudden stop or turn, or in a crash.

- Put things in the cargo area of the vehicle. Try to spread the weight evenly.

(Continued)

Warning (Continued)

- Never stack heavier things, like suitcases, inside the vehicle so that some of them are above the tops of the seats.
- Do not leave an unsecured child restraint in the vehicle.
- When you carry something inside the vehicle, secure it whenever you can.
- Do not leave a seat folded down unless you need to.

Add-On Equipment

When carrying removable items, a limit on how many people carried inside the vehicle may be necessary. Be sure to weigh the vehicle before buying and installing the new equipment.

Starting and Operating

New Vehicle Break-In

Caution

The vehicle does not need an elaborate break-in. But it will perform better in the long run if you follow these guidelines:

- Keep the vehicle speed at 88 km/h (55 mph) or less for the first 805 km (500 mi).
- Do not drive at any one constant speed, fast or slow, for the first 805 km (500 mi). Do not make full-throttle starts. Avoid downshifting to brake or slow the vehicle.
- Avoid making hard stops for the first 322 km (200 mi) or so. During this time the new brake linings are not yet broken in. Hard stops with new linings can mean

(Continued)

Caution (Continued)

premature wear and earlier replacement. Follow this breaking-in guideline every time you get new brake linings.

- Do not tow a trailer during break-in. See *Trailer Towing* ⇨ *205* for the trailer towing capabilities of the vehicle and more information.

Following break-in, engine speed and load can be gradually increased.

Ignition Positions

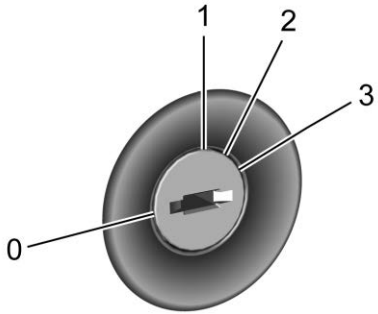

The ignition switch has four different positions.

To shift out of P (Park), the ignition must be on or in ACC/ACCESSORY and the regular brake pedal applied.

0 (STOPPING THE ENGINE/LOCK/OFF) : When the vehicle is stopped, turn the ignition switch to LOCK/OFF to turn the engine off. Retained Accessory Power (RAP) will remain active. See *Retained Accessory Power (RAP)* ⇨ *177*.

This position locks the ignition and transmission.

Do not turn the engine off when the vehicle is moving. This will cause a loss of power assist in the brake and steering systems and disable the airbags.

If the vehicle must be shut off in an emergency:

1. Brake using a firm and steady pressure. Do not pump the brakes repeatedly. This may deplete power assist, requiring increased brake pedal force.
2. Shift the vehicle to N (Neutral). This can be done while the vehicle is moving. After shifting to N (Neutral), firmly apply the brakes and steer the vehicle to a safe location.
3. Come to a complete stop, shift to P (Park), and turn the ignition off. On vehicles with an automatic transmission, the shift lever must be in P (Park) to turn the ignition switch to the LOCK/OFF position.
4. Set the parking brake. See *Parking Brake* ⇨ *187*.

⚠ Warning

Turning off the vehicle while moving may cause loss of power assist in the brake and steering systems and disable the airbags. While driving, only shut the vehicle off in an emergency.

If the vehicle cannot be pulled over, and must be shut off while driving, turn the ignition to ACC/ACCESSORY.

Caution

Using a tool to force the key to turn in the ignition could cause damage to the switch or break the key. Use the correct key, make sure it is all the way in, and turn it only with your hand. If the key cannot be turned by hand, see your dealer.

1 (ACC/ACCESSORY) : This is the position in which you can operate things like the radio and the windshield wipers when the engine is off.

2 (ON/RUN) : This position can be used to operate the electrical accessories and to display some instrument cluster warning and indicator lights. This position can also be used for service and diagnostics, and to verify the proper operation of the malfunction indicator lamp as may be required for emission inspection purposes. The switch stays in this position when the engine is running.

If you leave the key in the ACC/ACCESSORY or ON/RUN position with the engine off, the battery could be drained. You may not be able to start the vehicle if the battery is allowed to drain for an extended period of time.

3 (START) : This is the position that starts the engine. When the engine starts, release the key. The ignition switch returns to ON/RUN for driving.

A warning tone will sound when the driver door is opened, the ignition is in ACC/ACCESSORY or LOCK/OFF and the key is in the ignition.

Starting the Engine

If the vehicle has a diesel engine, see the Duramax diesel supplement.

To place the transmission in the proper gear:

Move the shift lever to P (Park) or N (Neutral). The engine will not start in any other position. To restart the engine when the vehicle is already moving, use N (Neutral) only.

Caution

If you add electrical parts or accessories, you could change the way the engine operates. Any resulting damage would not be covered by the vehicle warranty. See *Add-On Electrical Equipment* ⇨ *212*.

Caution

Do not try to shift to P (Park) if the vehicle is moving. If you do, you could damage the transmission. Shift to P (Park) only when the vehicle is stopped.

Caution

If the steering wheel is turned until it reaches the end of its travel, and is held in that position while starting the vehicle, damage may occur to the hydraulic power steering system and there may be loss of power steering assist.

Starting Procedure

1. With your foot off the accelerator pedal, turn the ignition key to START. When the engine starts, let go of the key. The idle speed will go down as your engine gets warm. Do not race the engine

immediately after starting it. Operate the engine and transmission gently to allow the oil to warm up and lubricate all moving parts.

When the Low Fuel warning lamp is on and the FUEL LEVEL LOW message is displayed in the Driver Information Center (DIC), the Computer-Controlled Cranking System is disabled to prevent possible vehicle component damage. When this happens, hold the ignition switch in the START position to continue engine cranking.

Caution

Cranking the engine for long periods of time, by returning the ignition to the START position immediately after cranking has ended, can overheat and damage the cranking motor, and drain the

(Continued)

Caution (Continued)

battery. Wait at least 15 seconds between each try, to let the cranking motor cool down.

2. If the engine does not start after 5-10 seconds, especially in very cold weather (below −18 °C or 0 °F), it could be flooded with too much gasoline. Try pushing the accelerator pedal all the way to the floor and holding it there as you hold the key in START for up to 15 seconds. Wait at least 15 seconds between each try, to allow the cranking motor to cool down. When the engine starts, let go of the key and accelerator. If the vehicle starts briefly but then stops again, do the same thing. This clears the extra gasoline from the engine. Do not race the engine immediately after starting it. Operate the engine and transmission gently until the oil warms up and lubricates all moving parts.

Fast Idle System

If equipped, this feature is available only with cruise control. The manual fast idle switch is operated using the cruise control buttons on the left side of the steering wheel.

This system can be used to increase engine idle speed whenever the following conditions are met:

- The parking brake is set.
- The brake pedal is not pressed.
- The vehicle must not be moving and the accelerator must not be pressed.

To control the fast idle:

- To enable the Fast Idle System, press and release the cruise control on/off button and ensure that the switch indicator light is lit.

- Press and release the cruise control SET- button. Engine speed will be held at approximately 1200 rpm.

When the fast idle is active, the Driver Information Center (DIC) will display FAST IDLE ON.

One of the following actions will turn off the fast idle:

- Pressing the brake.
- Selecting the cruise control cancel button.
- Releasing the parking brake.
- Moving the transmission shift lever out of P (Park) or N (Neutral).
- Selecting the cruise control on/off button when it was previously on.
- Pressing the cruise control SET- button a second time.
- Pressing the accelerator more than one-quarter of the way down.
- Turning the ignition off.

Retained Accessory Power (RAP)

These vehicle accessories can be used for up to 10 minutes after the engine is turned off:

- Audio System
- Power Windows (if equipped)

These features will work when the ignition is on or in ACC/ACCESSORY. Once the ignition is turned from on to off, power to the radio and power windows will continue to work 10 minutes or until the driver door is opened.

Engine Coolant Heater

If the vehicle has a diesel engine, see the Duramax diesel supplement.

⚠ Warning

Do not plug in the engine block heater while the vehicle is parked in a garage or under a carport.

(Continued)

Warning (Continued)

Property damage or personal injury may result. Always park the vehicle in a clear open area away from buildings or structures.

The engine coolant heater can provide easier starting and better fuel economy during engine warm-up in cold weather conditions at or below −18 °C (0 °F). Vehicles with an engine coolant heater should be plugged in at least four hours before starting. An internal thermostat in the plug end of the cord may exist which will prevent engine coolant heater operation at temperatures above −18 °C (0 °F).

To Use the Engine Coolant Heater

1. Turn off the engine.
2. Open the hood and unwrap the electrical cord.

The cord for the engine coolant heater is on the driver side of the engine compartment and is attached to the hose for the power steering reservoir.

Check the heater cord for damage. If it is damaged, do not use it. See your dealer for a replacement. Inspect the cord for damage yearly.

3. Plug it into a normal, grounded 110-volt AC outlet.

⚠ Warning

Improper use of the heater cord or an extension cord can damage the cord and may result in overheating and fire.

- Plug the cord into a three-prong electrical utility receptacle that is protected by a ground fault detection

(Continued)

Warning (Continued)

function. An ungrounded outlet could cause an electric shock.

- Use a weatherproof, heavy-duty, 15 amp-rated extension cord if needed. Failure to use the recommended extension cord in good operating condition, or using a damaged heater or extension cord, could make it overheat and cause a fire, property damage, electric shock, and injury.
- Do not operate the vehicle with the heater cord permanently attached to the

(Continued)

Warning (Continued)

vehicle. Possible heater cord and thermostat damage could occur.

- While in use, do not let the heater cord touch vehicle parts or sharp edges. Never close the hood on the heater cord.
- Before starting the vehicle, unplug the cord, reattach the cover to the plug, and securely fasten the cord. Keep the cord away from any moving parts.

4. Before starting the engine, be sure to unplug and store the cord as it was before to keep it away from moving engine parts and prevent damage.

The length of time the heater should remain plugged in depends on several factors. Ask a dealer in the area where you will be parking the vehicle for the best advice on this.

Shifting Into Park

1. Hold the brake pedal down, then set the parking brake.
2. Move the shift lever into the P (Park) position by pulling the shift lever toward you and moving it up as far as it will go.
3. Turn the ignition off.
4. Remove the key and take it with you. If you can leave the vehicle with the ignition key in your hand, the vehicle is in P (Park).

Leaving the Vehicle with the Engine Running

⚠ Warning

It can be dangerous to leave the vehicle with the engine running. It could overheat and catch fire.

It is dangerous to get out of the vehicle if the shift lever is not fully in P (Park) with the parking brake firmly set. The vehicle can roll.

(Continued)

Warning (Continued)

Do not leave the vehicle when the engine is running. If you have left the engine running, the vehicle can move suddenly. You or others could be injured. To be sure the vehicle will not move, even when you are on fairly level ground, always set the parking brake and move the shift lever to P (Park). See *Shifting Into Park* ⇨ *179*.
If you are towing a trailer, see *Driving Characteristics and Towing Tips* ⇨ *202*.

If you have to leave the vehicle with the engine running, be sure the vehicle is in P (Park) and the parking brake is firmly set. After the shift lever is moved into P (Park), hold the regular brake pedal down. Then, see if you can move the shift lever away from P (Park) without first pulling it toward you. If you can, it means that the shift lever was not fully locked into P (Park).

Torque Lock

If you are parking on a hill and you do not shift the transmission into P (Park) properly, the weight of the vehicle can put too much force on the parking pawl in the transmission. It might be difficult to pull the shift lever out of P (Park). This is called torque lock. To prevent torque lock, set the parking brake and then shift into P (Park) properly before you leave the driver seat. To find out how, see *Shifting Into Park* ⇨ *179*.

When you are ready to drive, move the shift lever out of P (Park) before releasing the parking brake.

If torque lock does occur, you might need to have another vehicle push yours a little uphill to take some of the pressure from the parking pawl in the transmission. Then you should be able to pull the shift lever out of P (Park).

Shifting out of Park

The vehicle has an automatic transmission shift lock control system. You have to fully apply the brakes before you can shift from P (Park) when the ignition is on or in ACC/ACCESSORY. See *Automatic Transmission* ⇨ *182*.

The shift lock control system is designed to:

- Prevent the ignition key from being removed unless the shift lever is in P (Park).
- Prevent movement of the shift lever out of P (Park), unless the ignition is on or in ACC/ACCESSORY and the regular brake pedal is applied.

The shift lock control system is always functional except in the case of a dead battery or low voltage (less than 9 V) battery.

If the vehicle has an uncharged battery or a battery with low voltage, try charging or jump starting the battery. See *Jump Starting - North America* ⇨ *286*.

To shift out of P (Park):

1. Apply the brake pedal.
2. Turn the ignition on or to ACC/ACCESSORY.
3. Move the shift lever to the desired position.

If you still are unable to shift out of P (Park):

1. Ease the pressure on the shift lever.
2. While holding down the brake pedal, push the shift lever all the way into P (Park).
3. Move the shift lever to the desired position.

If you are still having a problem shifting, have the vehicle serviced.

Parking over Things That Burn

⚠ Warning

Things that can burn could touch hot exhaust parts under the vehicle and ignite. Do not park over papers, leaves, dry grass, or other things that can burn.

Engine Exhaust

⚠ Warning

Engine exhaust contains carbon monoxide (CO), which cannot be seen or smelled. Exposure to CO can cause unconsciousness and even death.

Exhaust may enter the vehicle if:

- The vehicle idles in areas with poor ventilation (parking garages, tunnels, deep snow that may block underbody airflow or tail pipes).
- The exhaust smells or sounds strange or different.
- The exhaust system leaks due to corrosion or damage.
- The vehicle exhaust system has been modified, damaged, or improperly repaired.

(Continued)

Warning (Continued)

- There are holes or openings in the vehicle body from damage or aftermarket modifications that are not completely sealed.

If unusual fumes are detected or if it is suspected that exhaust is coming into the vehicle:

- Drive it only with the windows completely down.
- Have the vehicle repaired immediately.

Never park the vehicle with the engine running in an enclosed area such as a garage or a building that has no fresh air ventilation.

Running the Vehicle While Parked

It is better not to park with the engine running.

If the vehicle is left with the engine running, follow the proper steps to be sure the vehicle will not move. See *Shifting Into Park* ⇨ *179* and *Engine Exhaust* ⇨ *181*.

If parking on a hill and pulling a trailer, see *Driving Characteristics and Towing Tips* ⇨ *202*.

Automatic Transmission

A shift position indicator is in the instrument cluster.

There are several different positions for the shift lever.

See “Range Selection Mode” under *Manual Mode* ⇨ *185*.

P : This position locks the rear wheels. It is the best position to use when starting the engine because the vehicle cannot move easily. When parked on a hill, especially when the vehicle has a heavy load, you might notice an increase in the effort to shift out of P (Park). See “Torque Lock” under *Shifting Into Park* ⇨ *179*.

⚠ Warning

It is dangerous to get out of the vehicle if the shift lever is not fully in P (Park) with the parking brake firmly set. The vehicle can roll.

Do not leave the vehicle when the engine is running. If you have left the engine running, the vehicle can move suddenly. You or others could be injured. To be sure the vehicle will not move, even when you are on fairly level ground, always set the parking brake and move the shift lever to P (Park). See *Shifting Into Park* ⇨ *179* and *Driving Characteristics and Towing Tips* ⇨ *202*.

R : Use this gear to back up.

Caution

Shifting to R (Reverse) while the vehicle is moving forward could damage the transmission. The

(Continued)

Caution (Continued)

repairs would not be covered by the vehicle warranty. Shift to R (Reverse) only after the vehicle is stopped.

To rock the vehicle back and forth to get out of snow, ice, or sand without damaging the transmission, see *If the Vehicle Is Stuck* ⇨ *169*.

N : In this position, the engine does not connect with the wheels. To restart when you are already moving, use N (Neutral) only. Also, use N (Neutral) when the vehicle is being towed.

⚠ Warning

Shifting into a drive gear while the engine is running at high speed is dangerous. Unless your foot is firmly on the brake pedal, the vehicle could move very rapidly. You could lose control and hit

(Continued)

Warning (Continued)

people or objects. Do not shift into a drive gear while the engine is running at high speed.

Caution

Shifting out of P (Park) or N (Neutral) with the engine running at high speed may damage the transmission. The repairs would not be covered by the vehicle warranty. Be sure the engine is not running at high speed when shifting the vehicle.

Caution

A transmission hot message may display if the automatic transmission fluid is too hot. Driving under this condition can damage the vehicle. Stop and idle

(Continued)

Caution (Continued)

the engine to cool the automatic transmission fluid. This message clears when the transmission fluid has cooled sufficiently.

D : This position is for normal driving. It provides the best fuel economy. If you need more power for passing, and you are:

- Going less than about 55 km/h (35 mph), push the accelerator pedal about halfway down.
- Going about 55 km/h (35 mph) or more, push the accelerator all the way down.

  By doing this, the vehicle shifts down to the next gear and has more power.

D (Drive) can be used when towing a trailer, carrying a heavy load, or driving on steep hills. You might want to shift the transmission to a lower gear selection if the transmission shifts too often.

Downshifting the transmission in slippery road conditions could result in skidding. See “Skidding” under *Loss of Control* ⇨ *165*.

The vehicle has a shift stabilization feature that adjusts the transmission shifting to the current driving conditions in order to reduce rapid upshifts and downshifts. This shift stabilization feature is designed to determine, before making an upshift, if the engine is able to maintain vehicle speed by analyzing things such as vehicle speed, throttle position, and vehicle load. If the shift stabilization feature determines that a current vehicle speed cannot be maintained, the transmission does not upshift and instead holds the current gear. In some cases, this could appear to be a delayed shift, however the transmission is operating normally.

The transmission uses adaptive shift controls. Adaptive shift controls continually compare key shift parameters to pre-programmed ideal shifts stored in the transmission’s computer. The

transmission constantly makes adjustments to improve vehicle performance according to how the vehicle is being used, such as with a heavy load or when the temperature changes. During this adaptive shift control process, shifting might feel different as the transmission determines the best settings.

The shift quality of a new vehicle may not be ideal because the adaptive shift control process may not have determined the best settings for a particular shift or condition. Shift quality will improve with continued driving.

When temperatures are very cold, the transmission's gear shifting could be delayed, providing more stable shifts until the engine warms up. Shifts could be more noticeable with a cold transmission. This difference in shifting is normal.

M : This position lets drivers select the range of gears appropriate for current driving conditions. If the vehicle has this feature, see “Range Selection Mode” under *Manual Mode* ⇨ *185*.

1 : This position reduces vehicle speed without using the brakes. You can use it for major/severe downgrades where the vehicle would otherwise accelerate due to steepness of grade. When you shift to 1 (First) it provides the lowest gear appropriate to current road speed and continues to downshift as the vehicle slows, eventually downshifting to 1 (First) gear. The transmission can be held in 1 (First) gear using Range Selection Mode or the shift lever. See “Range Selection Mode” under *Manual Mode* ⇨ *185*.

Caution

Spinning the tires or holding the vehicle in one place on a hill using only the accelerator pedal may damage the transmission. The repair will not be covered by the vehicle warranty. If the vehicle

(Continued)

Caution (Continued)

is stuck, do not spin the tires. When stopping on a hill, use the brakes to hold the vehicle in place.

Normal Mode Grade Braking

This mode is enabled when the vehicle is started, but is not enabled in Range Selection Mode. It assists in maintaining desired vehicle speeds when driving on downhill grades by using the engine and transmission to slow the vehicle. The first time the system activates for each ignition key cycle.

To disable or enable Normal Mode Grade Braking within the current ignition key cycle, press and hold the Tow/Haul button for three seconds.

For other forms of grade braking, see *Tow/Haul Mode* ⇨ *185* and *Cruise Control* ⇨ *191*.

Manual Mode

Range Selection Mode

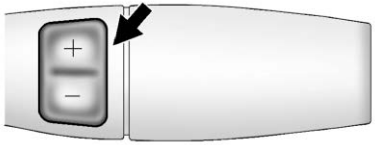

If equipped, Range Selection Mode helps control the vehicle's transmission and vehicle speed while driving downhill or towing a trailer by letting you select a desired range of gears.

To use this feature:

1. Move the shift lever to M (Manual Mode).
2. Press the +/− buttons on the shift lever to select the desired range of gears for current driving conditions.

When M (Manual Mode) is selected, the transmission will downshift and a number displays in the Driver Information Center (DIC) next to the M indicating the current gear. This number is the highest gear that can be used. However, the vehicle can automatically shift to lower gears as it adjusts to driving conditions. This means that all gears below that number are available. When 5 (Fifth) is selected, 1 (First) through 5 (Fifth) gears are automatically shifted by the vehicle, but 6 (Sixth) cannot be used until the +/− button on the shift lever is used to change to the gear.

Grade Braking is not available when Range Selection Mode is active. See *Tow/Haul Mode* ⇨ *185*.

While using Range Selection Mode, cruise control and the Tow/Haul Mode can be used.

Caution

Spinning the tires or holding the vehicle in one place on a hill using only the accelerator pedal may damage the transmission. The repair will not be covered by the vehicle warranty. If the vehicle

(Continued)

Caution (Continued)

is stuck, do not spin the tires. When stopping on a hill, use the brakes to hold the vehicle in place.

Tow/Haul Mode

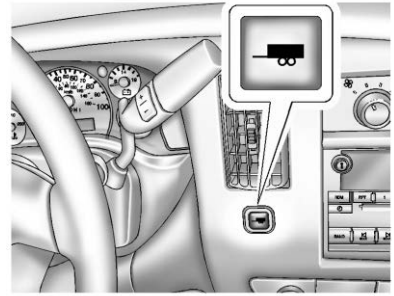

If equipped, Tow/Haul Mode adjusts the transmission shift pattern to reduce shift cycling, providing increased performance, vehicle control, and transmission cooling when towing or hauling heavy loads.

Turn the Tow/Haul Mode on and off by pressing the button on the instrument panel. When Tow/Haul is on, a light on the instrument cluster will come on.

See *Tow/Haul Mode Light* ⇨ *108*.

Also see “Tow/Haul Mode” under *Towing Equipment* ⇨ *209*.

Tow/Haul Mode Grade Braking

Tow/Haul Mode Grade Braking is only enabled while the Tow/Haul Mode is selected and the vehicle is not in the Range Selection Mode. See “Tow/Haul Mode” listed previously and *Manual Mode* ⇨ *185*. Tow/Haul Mode Grade Braking assists in maintaining desired vehicle speeds when driving on downhill grades by using the engine and transmission to slow the vehicle.

To disable or enable Tow/Haul Mode Grade Braking within the current ignition key cycle, press and hold the Tow/Haul button for three seconds.

See *Towing Equipment* ⇨ *209*.

For other forms of grade braking, see *Automatic Transmission* ⇨ *182* and *Cruise Control* ⇨ *191*.

Brakes

Antilock Brake System (ABS)

This vehicle has an Antilock Brake System (ABS), an advanced electronic braking system that helps prevent a braking skid.

When the vehicle begins to drive away, ABS checks itself. A momentary motor or clicking noise may be heard while this test is going on, and it may even be noticed that the brake pedal moves a little. This is normal.

If there is a problem with ABS, this warning light stays on. See *Antilock Brake System (ABS) Warning Light* ⇨ *107*.

If driving safely on a wet road and it becomes necessary to slam on the brakes and continue braking to avoid a sudden obstacle, a computer senses the wheels are slowing down. If one of the wheels is about to stop rolling, the computer will separately work the brakes at each wheel.

ABS can change the brake pressure to each wheel, as required, faster than any driver could. This can help you steer around the obstacle while braking hard.

As the brakes are applied, the computer keeps receiving updates on wheel speed and controls braking pressure accordingly.

Remember: ABS does not change the time needed to get a foot up to the brake pedal or always decrease stopping distance. If you get too close to the vehicle in front of you, there will not be enough time to apply the brakes if that vehicle suddenly slows or stops. Always leave enough room up ahead to stop, even with ABS.

Using ABS

Do not pump the brakes. Just hold the brake pedal down firmly and let ABS work. You may hear the ABS pump or motor operating and feel the brake pedal pulsate. This is normal.

Braking in Emergencies

ABS allows you to steer and brake at the same time. In many emergencies, steering can help more than even the very best braking.

Parking Brake

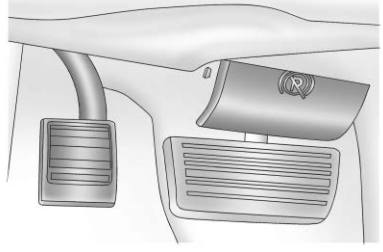

To set the parking brake, hold the regular brake pedal, then push down the parking brake pedal.

If the ignition is on, the brake system warning light will come on.

To release the parking brake, hold the regular brake pedal down. Pull the handle, located just above the parking brake pedal, with the parking brake symbol, to release the parking brake.

If the ignition is on when the parking brake is released, the brake system warning light will go off.

Caution
Driving with the parking brake on can overheat the brake system and cause premature wear or damage to brake system parts. Make sure that the parking brake is fully released and the brake warning light is off before driving.

If you are towing a trailer and are parking on a hill, see *Driving Characteristics and Towing Tips* ⇨ *202*.

Brake Assist

The Brake Assist feature is designed to assist the driver in stopping or decreasing vehicle speed in emergency driving conditions. This feature uses the stability system hydraulic brake control module to supplement the power brake system under conditions where the driver has quickly and forcefully applied the brake pedal in an attempt to quickly stop or slow down the vehicle. The stability system hydraulic brake control module increases brake pressure at each corner of the vehicle until the ABS activates. Minor brake pedal pulsation or pedal movement during this time is normal and the driver should continue to apply the brake pedal as the driving situation dictates. The Brake Assist feature will automatically disengage when the brake pedal is released or brake pedal pressure is quickly decreased.

Hill Start Assist (HSA)

If equipped, this feature will prevent the vehicle from rolling when it attempts to move on a moderate to steep hill. During the transition when the brake pedal is released and the accelerator pedal is pressed, HSA uses braking pressure to hold the vehicle stationary for a few seconds depending on the steepness of the hill. After this transition or after the accelerator pedal is pressed, the brake will automatically release. HSA only activates when the driver door is closed. HSA will not activate in a forward drive gear when facing downhill, or in R (Reverse) when facing uphill. If the brake pedal is released and then reapplied while HSA is activated, the brake pedal may feel firmer with less pedal travel.

Ride Control Systems

Traction Control/ Electronic Stability Control

System Operation

The vehicle has a Traction Control System (TCS) and StabiliTrak, an electronic stability control system. These systems help limit wheel spin and assist the driver in maintaining control, especially on slippery road conditions.

TCS activates if it senses any of the drive wheels are spinning or beginning to lose traction. When this happens, TCS applies the brakes to the spinning wheels and reduces engine power to limit wheel spin.

StabiliTrak activates when the vehicle senses a difference between the intended path and the direction the vehicle is actually traveling. StabiliTrak selectively applies braking pressure to any one of the vehicle wheel brakes to assist the driver in keeping the vehicle on the

intended path. Trailer Sway Control (TSC) is also on automatically when the vehicle is started. See *Trailer Sway Control (TSC)* ⇨ *211*.

If cruise control is being used and traction control or StabiliTrak begins to limit wheel spin, cruise control will disengage. Cruise control may be turned back on when road conditions allow.

Both systems come on automatically when the vehicle is started and begins to move. The systems may be heard or felt while they are operating or while performing diagnostic checks. This is normal and does not mean there is a problem with the vehicle.

It is recommended to leave both systems on for normal driving conditions, but it may be necessary to turn TCS off if the vehicle gets stuck in sand, mud, ice, or snow. See *If the Vehicle Is Stuck* ⇨ *169* and “Turning the Systems Off and On” later in this section.

The indicator light for both systems is in the instrument cluster. This light will:

- Flash when TCS is limiting wheel spin.
- Flash when StabiliTrak is activated.
- Turn on and stay on when either system is not working.

If either system fails to turn on or to activate, a message displays in the Driver Information Center (DIC), and comes on and stays on to indicate that the system is inactive and is not assisting the driver in maintaining control. The vehicle is safe to drive, but driving should be adjusted accordingly.

If comes on and stays on:

1. Stop the vehicle.
2. Turn the engine off and wait 15 seconds.
3. Start the engine.

Drive the vehicle. If comes on and stays on, the vehicle may need more time to diagnose the problem. If the condition persists, see your dealer.

Turning the Systems Off and On

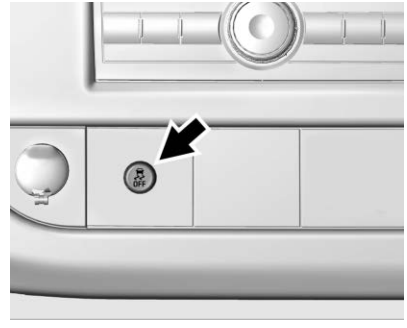

Caution
Do not repeatedly brake or accelerate heavily when TCS is off. The vehicle driveline could be damaged.

To turn off only TCS, press and release OFF. The appropriate message will display in the DIC. To turn TCS on again, press and release OFF.

If TCS is limiting wheel spin when OFF is pressed, the system will not turn off until the wheels stop spinning.

To turn off both TCS and StabiliTrak, press and hold OFF until the StabiliTrak OFF light OFF comes on and stays on in the instrument cluster, then release. The appropriate message will display in the DIC.

To turn TCS and StabiliTrak on again, press and release OFF. The StabiliTrak OFF light OFF in the instrument cluster turns off.

StabiliTrak will automatically turn back on if the vehicle exceeds 32 km/h (20 mph). TCS will remain off until OFF is pressed or the ignition is cycled off then on.

The vehicle has a Trailer Sway Control (TSC) feature and a Hill Start Assist (HSA) feature. See *Trailer Sway Control (TSC)* ⇨ *211* or *Hill Start Assist (HSA)* ⇨ *188*.

Adding accessories can affect the vehicle performance. See *Accessories and Modifications* ⇨ *215*.

Locking Rear Axle

Vehicles with a locking rear axle can give more traction on snow, mud, ice, sand, or gravel. It works like a standard axle most of the time, but when traction is low, this feature will allow the rear wheel with the most traction to move the vehicle.

Cruise Control

⚠ Warning

Cruise control can be dangerous where you cannot drive safely at a steady speed. Do not use cruise control on winding roads or in heavy traffic.

Cruise control can be dangerous on slippery roads. On such roads, fast changes in tire traction can cause excessive wheel slip, and you could lose control. Do not use cruise control on slippery roads.

If equipped with cruise control, a speed of about 40 km/h (25 mph) or more can be maintained without keeping your foot on the accelerator. Cruise control does not work at speeds below about 40 km/h (25 mph).

If the Traction Control System (TCS) or StabiliTrak electronic stability control system begins to limit wheel spin while using cruise control, the cruise control automatically disengages. See *Traction Control/ Electronic Stability Control* ⇨ *188*. When road conditions allow you to safely use it again, cruise control can be turned back on.

If the brakes are applied, cruise control disengages.

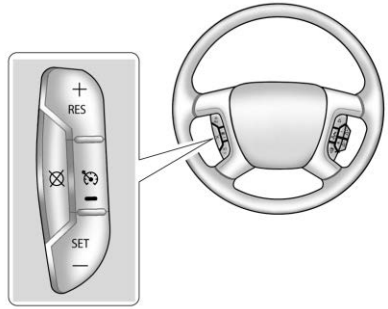

⏲ : Press to turn cruise control on or off. The white indicator comes on in the instrument cluster when cruise control is turned on.

+RES : If there is a set speed in memory, press briefly to resume that speed or press and hold to accelerate. If cruise control is already active, use to increase vehicle speed.

SET− : Press briefly to set the speed and activate cruise control. If cruise control is already active, use to decrease vehicle speed.

⊗ : Press to disengage cruise control without erasing the set speed from memory.

Setting Cruise Control

If ⏲ is on when not in use, the SET− or +RES button could get pressed and go into cruise when not desired. Keep ⏲ off when cruise is not being used.

To set a speed:

1. Press ⏲ to turn the cruise system on.
2. Get up to the desired speed.
3. Press and release SET−.
4. Remove your foot from the accelerator.

The cruise control indicator on the instrument cluster turns green after cruise control has been set to the desired speed. See *Instrument Cluster* ⇨ *98*.

Resuming a Set Speed

If the cruise control is set at a desired speed and then the brakes are applied or ⊗ is pressed, the cruise control is disengaged without erasing the set speed from memory.

Once the vehicle speed reaches about 40 km/h (25 mph) or more, briefly press +RES. The vehicle returns to the previous set speed.

Increasing Speed While Using Cruise Control

If the cruise control system is already activated:

- Press and hold +RES until the desired speed is reached, then release it.
- To increase vehicle speed in small increments, briefly press +RES. For each press, the vehicle goes about 1 km/h (Metric display) or 1 mph (English display) faster.

The speedometer reading can be displayed in either English or metric units. See *Driver Information Center (DIC)* ⇨ *111*. The increment value used depends on the units displayed.

Reducing Speed While Using Cruise Control

If the cruise control system is already activated:

- Press and hold SET– until the desired lower speed is reached, then release it.
- To slow down in small increments, briefly press SET–. For each press, the vehicle goes about 1 km/h (Metric display) or 1 mph (English display) slower.

The speedometer reading can be displayed in either English or metric units. See *Driver Information Center (DIC)* ⇨ *111*. The increment value used depends on the units displayed.

Passing Another Vehicle While Using Cruise Control

Use the accelerator pedal to increase the vehicle speed. When you take your foot off the pedal, the vehicle will slow down to the previous set cruise speed. While pressing the accelerator pedal or shortly following the release to override cruise control, briefly pressing SET– will result in cruise set to the current vehicle speed.

Using Cruise Control on Hills

How well the cruise control works on hills depends on the vehicle speed, load, and the steepness of the hills. When going up steep hills, pressing the accelerator pedal may be necessary to maintain vehicle speed. When going downhill, Cruise Grade Braking helps maintain the driver selected speed.

Cruise Grade Braking is enabled when the vehicle is started and cruise control is active. It assists in maintaining driver selected speed

when driving on downhill grades by using the engine and transmission to slow the vehicle.

If the brake pedal is applied, cruise control will disengage.

Ending Cruise Control

There are four ways to end cruise control:

- Step lightly on the brake pedal.
- Press ⊗.
- Shift the transmission to N (Neutral).
- To turn off cruise control, press .

Erasing Speed Memory

The cruise control set speed is erased from memory if is pressed or if the vehicle is turned off.

Driver Assistance Systems

Rear Vision Camera (RVC)

If equipped, the RVC system is designed to help the driver when backing up by displaying a view of the area behind the vehicle.

⚠ Warning

The camera(s) do not display children, pedestrians, bicyclists, crossing traffic, animals, or any other object outside of the cameras' field of view, below the bumper, or under the vehicle. Shown distances may be different from actual distances. Do not drive or park the vehicle using only these camera(s). Always check behind and around the vehicle before driving. Failure to use proper care may result in injury, death, or vehicle damage.

When the vehicle is on and shifted into R (Reverse), the video image appears on the inside rearview mirror. The video image disappears after the vehicle is shifted out of R (Reverse).

RVC Location

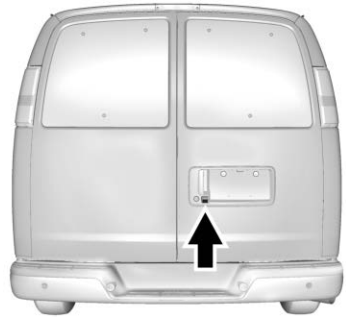

The camera is next to the license plate.

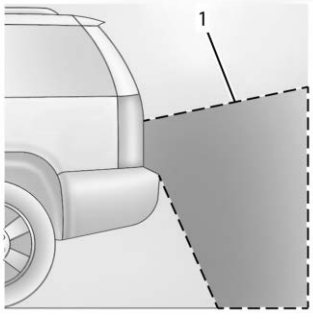

1. View displayed by the camera

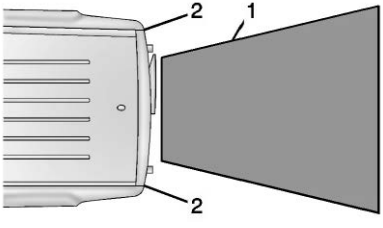

1. View displayed by the camera
2. Corners of the rear bumper

Displayed images may be further or closer than they appear. The area displayed is limited and objects that are close to either corner of the bumper or under the bumper do not display.

When the System Does Not Seem To Work Properly

The RVC system might not work properly or display a clear image if:

- It is dark.
- The sun or the beam of headlamps is shining directly into the camera lens.
- Ice, snow, mud, or anything else builds up on the camera lens. Clean the lens, rinse it with water, and wipe it with a soft cloth.
- The back of the vehicle is in an accident. The position and mounting angle of the camera can change or the camera can be affected. Be sure to have the camera and its position and mounting angle checked at your dealer.

Troubleshooting

If the vehicle is in R (Reverse) and a blue screen is displayed in the mirror and then the display shuts off, see your dealer for service.

Parking Assist

If equipped, the Rear Parking Assist (RPA) system uses sensors on the rear bumper to assist with parking and avoiding objects while in R (Reverse).

⚠ Warning

The parking assist system does not detect children, pedestrians, bicyclists, animals, or objects below the bumper or that are too close or too far from the vehicle. It is not available at speeds greater than 8 km/h (5 mph). To prevent injury, death, or vehicle damage, even with parking assist, always check the area around the vehicle and check all mirrors before backing.

How the System Works

RPA comes on automatically when the shift lever is moved into R (Reverse). A single beep sounds to indicate the system is working.

RPA operates only at speeds less than 8 km/h (5 mph).

An obstacle detection is indicated by beeps. The time between beeps gets shorter as the vehicle approaches the obstacle. Repeated beeps are heard when the distance is less than 30 cm (12 in).

To be detected, objects must be at least 25 cm (10 in) off the ground and below rear door level. Objects must also be within 2.5 m (8 ft) from the rear bumper. This distance may be less during warmer or humid weather.

Turning the System On and Off

The system can be disabled through the Driver Information Center (DIC). See “Park Assist” under *Driver Information Center (DIC)* ⇨ *111*.

RPA defaults to the on setting each time the vehicle is started.

Turn RPA off when towing a trailer.

When the System Does Not Seem to Work Properly

The following messages may be displayed on the DIC:

SERVICE PARK ASSIST : If this message occurs, take the vehicle to your dealer for repair.

PARK ASSIST OFF : This message occurs if the driver disables the system or if the vehicle is driven above 8 km/h (5 mph) in R (Reverse).

PARK ASST BLOCKED SEE OWNERS MANUAL : This message can occur under the following conditions:

- The sensors are not clean. Keep the rear bumper free of mud, dirt, snow, ice, slush, and frost. The message may not clear until frost or ice has melted all around and inside the sensor.
- A trailer is attached to the vehicle, or a bicycle or an object hanging out of the rear door during the current or last drive cycle. RPA will return to normal operation after it is determined the object is removed. This could take a few drive cycles.
- A tow bar is attached to the vehicle.

Other conditions may affect system performance, such as vibrations from a jackhammer or the compression of air brakes on a very large truck.

Side Blind Zone Alert (SBZA)

If equipped, the SBZA system is a lane-changing aid that assists drivers with avoiding crashes that occur with moving vehicles in the side blind zone (or spot) areas. The SBZA warning display will light up in the corresponding outside side mirror and will flash if the turn signal is on.

⚠ Warning

SBZA does not alert the driver to vehicles rapidly approaching outside of the side blind zones, pedestrians, bicyclists, or animals. It may not provide alerts when changing lanes under all driving conditions. Failure to use proper care when changing lanes may result in injury, death, or vehicle damage. Before making a lane change, always check mirrors, glance over your shoulder, and use the turn signals.

SBZA Detection Zones

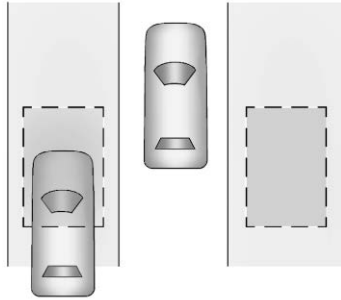

The SBZA sensor covers a zone of approximately one lane over from both sides of the vehicle, or 3.5 m (11 ft). The height of the zone is approximately between 0.5 m (1.5 ft) and 2 m (6 ft) off the ground. This zone starts at approximately the middle of the vehicle and goes back 8 m (26 ft).

How the System Works

The SBZA symbol lights up in the side mirrors when the system detects a moving vehicle in the next lane over that is in the side blind zone. This indicates it may be unsafe to change lanes. Before making a lane change, check the SBZA display, check mirrors, glance over your shoulder, and use the turn signals.

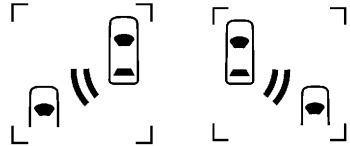

Left Side Mirror Display **Right Side Mirror Display**

When the vehicle is started, both outside mirror SBZA displays will briefly come on to indicate the system is operating. When the vehicle is in a forward gear, the left or right side mirror display will light up if a moving vehicle is detected in that blind zone. If the turn signal is activated in the same direction of a detected vehicle, this display will flash as an extra warning not to change lanes.

SBZA can be disabled through the Driver Information Center (DIC). See *Driver Information Center (DIC)* ⇨ *111*. If SBZA is disabled by the driver, the SBZA mirror displays will not light up.

When the System Does Not Seem to Work Properly

SBZA displays may not come on when passing a vehicle quickly, for a stopped vehicle, or when towing a trailer. The SBZA detection zones that extend back from the side of the vehicle do not move further back when a trailer is towed. Use caution while changing lanes when towing a trailer. SBZA may alert to objects attached to the vehicle, such as a trailer, bicycle, or object extending out to either side of the vehicle. This is normal system operation; the vehicle does not need service.

SBZA may not always alert the driver to vehicles in the side blind zone, especially in wet conditions. The system does not need to be serviced. The system may light up due to guardrails, signs, trees, shrubs, and other non-moving objects. This is normal system operation; the vehicle does not need service.

SBZA may not operate when the SBZA sensors in the left or right corners of the rear bumper are covered with mud, dirt, snow, ice, or slush, or in heavy rainstorms. For cleaning instructions, see "Washing the Vehicle" under *Exterior Care* ⇨ *292*. If the DIC displays the system unavailable message after cleaning both sides of the vehicle toward the rear corners of the vehicle, see your dealer.

If the SBZA displays do not light up when vehicles are in the blind zone and the system is clean, the system may need service. Take the vehicle to your dealer.

Radio Frequency Information

See *Radio Frequency Statement* ⇨ *328*.

Fuel

For diesel engine vehicles, see “Fuel for Diesel Engines” in the Duramax diesel supplement.

GM recommends the use of TOP TIER® detergent gasoline to keep the engine cleaner and reduce engine deposits. See www.toptiergas.com for a list of TOP TIER detergent gasoline marketers and applicable countries.

If the vehicle has a yellow fuel cap or a yellow sticker on the fuel door, E85 or FlexFuel can be used. See *E85 or FlexFuel* ⇨ *199*.

Use regular unleaded gasoline meeting ASTM specification D4814 with a posted octane rating of 87 or higher. Do not use gasoline with a posted octane rating of less than 87, as this may cause engine knock and will lower fuel economy.

Prohibited Fuels

Caution

Do not use fuels with any of the following conditions; doing so may damage the vehicle and void its warranty:

- For vehicles which are not FlexFuel, fuel labeled greater than 15% ethanol by volume, such as mid-level ethanol blends (16 – 50% ethanol), E85, or FlexFuel.
- Fuel with any amount of methanol, methylal, and aniline. These fuels can corrode metal fuel system parts or damage plastic and rubber parts.

(Continued)

Caution (Continued)

- Fuel containing metals such as methylcyclopentadienyl manganese tricarbonyl (MMT), which can damage the emissions control system and spark plugs.
- Fuel with a posted octane rating of less than the recommended fuel. Using this fuel will lower fuel economy and performance, and may decrease the life of the emissions catalyst.

California Fuel Requirements

If the vehicle is certified to meet California Emissions Standards, it is designed to operate on fuels that meet California specifications. See the underhood emission control label. If this fuel is not available in states adopting California Emissions Standards, the vehicle will operate satisfactorily on fuels meeting federal specifications, but emission control system performance may be affected. The malfunction indicator lamp could turn on and the vehicle may not pass a smog-check test. See *Malfunction Indicator Lamp (Check Engine Light)* ⇨ *105*. If this occurs, return to your authorized dealer for diagnosis. If it is determined that the condition is caused by the type of fuel used, repairs may not be covered by the vehicle warranty.

Fuels in Foreign Countries

The U.S., Canada, and Mexico post fuel octane ratings in anti-knock index (AKI). For fuel not to use in a foreign country, see “Prohibited Fuels” in *Fuel* ⇨ *197*.

Fuel Additives

To keep fuel systems clean, TOP TIER detergent gasoline is recommended. See *Fuel* ⇨ *197*.

If TOP TIER detergent gasoline is not available, one bottle of GM Fuel System Treatment Cleaner added to the fuel tank at every engine oil change, can help. GM Fuel System Treatment Cleaner is the only gasoline additive recommended by General Motors. It is available at your dealer.

If your vehicle is able to use E85 or FlexFuel, GM Fuel System Treatment Cleaner - FlexFuel is the only recommended additive for use. Do not use any other additives with an E85 or FlexFuel vehicle. See *E85 or FlexFuel* ⇨ *199*.

E85 or FlexFuel

Vehicles with a yellow fuel cap can use either unleaded gasoline or fuel containing up to 85% ethanol (E85). All other vehicles should use only the unleaded gasoline as described in *Fuel* ⇨ *197*.

The use of E85 or FlexFuel is encouraged when the vehicle is designed to use it. E85 or FlexFuel is made from renewable sources.

To help locate fuel stations that carry E85 or FlexFuel, the U.S. Department of Energy has an alternative fuels website. See www.afdc.energy.gov/afdc/locator/stations.

E85 or FlexFuel should meet ASTM Specification D 5798 or CAN/CGSB–3.512 in Canada. Do not use the fuel if the ethanol content is greater than 85%. Fuel mixtures that do not meet ASTM or CGSB specifications can affect driveability and could cause the malfunction indicator lamp to come on.

After refueling, the vehicle calculates the composition of the fuel. It is not recommended to repeatedly switch between fuels. If fuels are switched frequently, add as much fuel as possible and do not add less than 11 L (3 gal) when refueling. Drive at least 11 km (7 mi) immediately after refueling to allow the vehicle to adapt to the change in ethanol concentration.

Because E85 or FlexFuel has less energy per liter (gallon) than gasoline, the vehicle will need to be refilled more often. See *Filling the Tank* ⇨ *200*.

Caution

Some additives are not compatible with E85 or FlexFuel and can harm the vehicle's fuel system. Do not add anything to E85 or FlexFuel. Damage caused by additives would not be covered by the vehicle warranty.

Caution

Do not use fuel containing methanol. It can corrode metal parts in the fuel system and also damage plastic and rubber parts. That damage would not be covered under the vehicle warranty.

Filling the Tank

⚠ Warning

Fuel vapors and fuel fires burn violently and can cause injury or death.

- To help avoid injuries to you and others, read and follow all the instructions on the fuel pump island.
- Turn off the engine when refueling.
- Keep sparks, flames, and smoking materials away from fuel.
- Do not leave the fuel pump unattended.
- Do not use a cell phone while refueling.
- Do not re-enter the vehicle while pumping fuel.
- Keep children away from the fuel pump and never let children pump fuel.

(Continued)

Warning (Continued)

- Fuel can spray out if the fuel cap is opened too quickly. This spray can happen if the tank is nearly full, and is more likely in hot weather. Open the fuel cap slowly and wait for any hiss noise to stop, then unscrew the cap all the way.

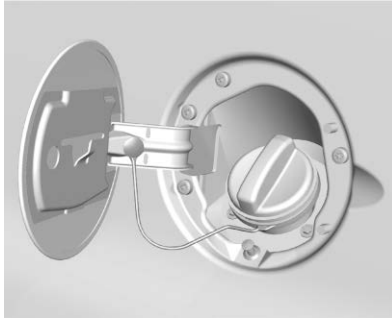

The fuel cap is behind a hinged fuel door on the driver side of the vehicle.

If the vehicle has E85 fuel capability, the fuel cap will be yellow and state that E85 or gasoline can be used. See *E85 or FlexFuel* ⇨ *199*.

To remove the fuel cap, turn it slowly counterclockwise.

While refueling, hang the tethered fuel cap from the hook on the fuel door.

⚠ Warning

Overfilling the fuel tank by more than three clicks of a standard fill nozzle may cause:

- Vehicle performance issues, including engine stalling and damage to the fuel system.
- Fuel spills.
- Potential fuel fires.

Be careful not to spill fuel. Wait a few seconds after you have finished pumping before removing the nozzle. Clean fuel from painted surfaces as soon as possible. See *Exterior Care* ⇨ *292*.

When replacing the fuel cap, turn it clockwise until it clicks. Make sure the cap is fully installed. The diagnostic system can determine if the fuel cap has been left off or improperly installed. This would allow fuel to evaporate into the atmosphere. See *Malfunction Indicator Lamp (Check Engine Light)* ⇨ *105*.

⚠ Warning

If a fire starts while you are refueling, do not remove the nozzle. Shut off the flow of fuel by shutting off the pump or by notifying the station attendant. Leave the area immediately.

Caution

If a new fuel cap is needed, be sure to get the right type of cap from your dealer. The wrong type of fuel cap may not fit properly,

(Continued)

Caution (Continued)

may cause the malfunction indicator lamp to light, and could damage the fuel tank and emissions system. See *Malfunction Indicator Lamp (Check Engine Light)* ⇨ *105*.

Filling a Portable Fuel Container

⚠ Warning

Filling a portable fuel container while it is in the vehicle can cause fuel vapors that can ignite either by static electricity or other means. You or others could be badly burned and the vehicle could be damaged. Always:

- Use approved fuel containers.

(Continued)

Warning (Continued)

- Remove the container from the vehicle, trunk, or pickup bed before filling.
- Place the container on the ground.
- Place the nozzle inside the fill opening of the container before dispensing fuel, and keep it in contact with the fill opening until filling is complete.
- Fill the container no more than 95% full to allow for expansion.
- Do not smoke, light matches, or use lighters while pumping fuel.
- Avoid using cell phones or other electronic devices.

Trailer Towing

General Towing Information

Only use towing equipment that has been designed for the vehicle. Contact your dealer or trailering dealer for assistance with preparing the vehicle for towing a trailer. Read the entire section before towing a trailer.

For towing a disabled vehicle, see *Towing the Vehicle* ⇨ *289*. For towing the vehicle behind another vehicle such as a motor home, see *Recreational Vehicle Towing* ⇨ *290*.

Driving Characteristics and Towing Tips

Driving with a Trailer

When towing a trailer:

- Become familiar with the state and local laws that apply to trailer towing.
- The trailer must be equipped with brakes adequate for the intended use. A loaded trailer weighing more than 680 kg (1,500 lb) must be equipped with its own brake system, with brakes working on all axles. Trailer braking equipment conforming to Canadian Standards Association (CSA) requirement CAN3-D313, or its equivalent, is recommended.
- Do not tow a trailer during the first 800 km (500 mi) to prevent damage to the engine, axle, or other parts.
- Then during the first 800 km (500 mi) of trailer towing, do not drive over 80 km/h (50 mph) and do not make starts at full throttle.
- Vehicles can tow in D (Drive). The Tow/Haul Mode may be used if the transmission shifts too often. See *Tow/Haul Mode* ⇨ *185*.
- Turn off Park Assist when towing.

⚠ Warning

When towing a trailer, exhaust gases may collect at the rear of the vehicle and enter if the liftgate, trunk/hatch, or rear-most window is open.

When towing a trailer:

- Do not drive with the liftgate, trunk/hatch, or rear-most window open.
- Fully open the air outlets on or under the instrument panel.
- Also adjust the climate control system to a setting that brings in only outside air. See “Climate Control Systems” in the Index.

For more information about carbon monoxide, see *Engine Exhaust* ⇨ *181*.

Towing a trailer requires a certain amount of experience. The combination you are driving is

longer and not as responsive as the vehicle itself. Get acquainted with the handling and braking of the rig before setting out for the open road.

The structure, tires, and brakes of the trailer must be rated to carry the load. Inadequate trailer equipment can cause the combination to operate in an unexpected or unsafe manner.

Before starting, check all trailer hitch parts and attachments, safety chains, electrical connectors, lamps, tires, and mirrors. Get familiar with the handling and braking of the rig.

Following Distance

Stay at least twice as far behind the vehicle ahead as you would when driving the vehicle without a trailer. This can help to avoid heavy braking and sudden turns.

Passing

More passing distance is needed when towing a trailer. The combination will not accelerate as quickly and is longer so it is necessary to go much farther beyond the passed vehicle before returning to the lane.

Backing Up

Hold the bottom of the steering wheel with one hand. To move the trailer to the left, move that hand to the left. To move the trailer to the right, move your hand to the right. Always back up slowly and, if possible, have someone guide you.

Making Turns

Caution

Making very sharp turns while trailering could cause the trailer to come in contact with the vehicle. The vehicle could be damaged. Avoid making very sharp turns while trailering.

When turning with a trailer, make wider turns than normal. Do this so the trailer will not strike soft shoulders, curbs, road signs, trees, or other objects. Avoid jerky or sudden maneuvers. Signal well in advance.

If the trailer turn signal bulbs burn out, the arrows on the instrument cluster will still flash for turns. It is important to check occasionally to be sure the trailer bulbs are still working.

Driving on Grades

Reduce speed and shift to a lower gear *before* starting down a long or steep downgrade. If the transmission is not shifted down, the brakes might get hot and no longer work well.

Vehicles can tow in D (Drive). Shift the transmission to a lower gear if the transmission shifts too often under heavy loads and/or hilly conditions.

The Tow/Haul Mode may be used if the transmission shifts too often. See *Tow/Haul Mode* ⇨ *185*.

When towing at high altitude on steep uphill grades, consider the following: Engine coolant will boil at

a lower temperature than at normal altitudes. If the engine is turned off immediately after towing at high altitude on steep uphill grades, the vehicle may show signs similar to engine overheating. To avoid this, let the engine run while parked, preferably on level ground, with the transmission in P (Park) for a few minutes before turning the engine off. If the overheat warning comes on, see *Engine Overheating* ⇨ *233*.

Parking on Hills

⚠ Warning

Parking the vehicle on a hill with the trailer attached can be dangerous. If something goes wrong, the rig could start to move. People can be injured, and both the vehicle and the trailer can be damaged. When possible, always park the rig on a flat surface.

If parking the rig on a hill:

1. Press the brake pedal, but do not shift into P (Park) yet. Turn the wheels into the curb if facing downhill or into traffic if facing uphill.
2. Have someone place chocks under the trailer wheels.
3. When the wheel chocks are in place, release the regular brakes until the chocks absorb the load.
4. Reapply the brake pedal. Then apply the parking brake and shift into P (Park).
5. Release the brake pedal.

Leaving After Parking on a Hill

1. Apply and hold the brake pedal.
2. Start the engine.
3. Shift into a gear.
4. Release the parking brake.
5. Let up on the brake pedal.
6. Drive slowly until the trailer is clear of the chocks.
7. Stop and have someone pick up and store the chocks.

Maintenance when Trailer Towing

The vehicle needs service more often when pulling a trailer. See *Maintenance Schedule* ⇨ *303*. Things that are especially important in trailer operation are automatic transmission fluid, engine oil, axle lubricant, belts, cooling system, and brake system. It is a good idea to inspect these before and during the trip.

Check periodically to see that all hitch nuts and bolts are tight.

Trailer Towing

If the vehicle has a diesel engine, see the Duramax diesel supplement.

Caution

Pulling a trailer improperly can damage the vehicle and result in costly repairs not covered by the vehicle warranty. To pull a trailer correctly, follow the advice in this section and see your dealer for important information about towing a trailer with the vehicle.

To identify the trailering capacity of the vehicle, read the information in “Weight of the Trailer” following.

Trailering is different than just driving the vehicle by itself. Trailering means changes in handling, acceleration, braking, durability, and fuel economy. Successful, safe trailering takes correct equipment, and it has to be used properly.

The following information has many time-tested, important trailering tips and safety rules. Many of these are important for your safety and that of your passengers. So please read this section carefully before pulling a trailer.

Weight of the Trailer

Safe trailering requires monitoring the weight, speed, altitude, road grades, outside temperature, the dimensions of the front of the trailer, and how frequently the vehicle is used to pull a trailer are all important. Take into consideration any special equipment on the vehicle, and the amount of tongue weight the vehicle can carry. See “Weight of the Trailer Tongue” later in this section.

Maximum trailer weight is calculated assuming only the driver is in the tow vehicle and it has all the required trailering equipment. The weight of additional optional equipment, passengers, and cargo in the tow vehicle must be subtracted from the maximum trailer weight.

Use the following chart to determine how much the vehicle can weigh, based upon the vehicle model and options.

Vehicle	Axle Ratio	Maximum Trailer Weight	GCWR (a)
G2500 Cargo Van 2WD Short Wheelbase			
4.3L V6	3.42	3 357 kg (7,400 lb)	5 897 kg (13,000 lb)
6.0L V8	3.42	4 536 kg (10,000 lb)	7 258 kg (16,000 lb)
G2500 Cargo Van 2WD Long Wheelbase			
4.3L V6	3.42	3 220 kg (7,100 lb)	5 897 kg (13,000 lb)
6.0L V8	3.42	4 536 kg (10,000 lb)	7 258 kg (16,000 lb)
G2500 Passenger Van 2WD Short Wheelbase			
4.3L V6	3.42	3 039 kg (6,700 lb)	5 897 kg (13,000 lb)
6.0L V8	3.42	4 355 kg (9,600 lb)	7 258 kg (16,000 lb)
G3500 Cargo Van 2WD Short Wheelbase			
4.3L V6	3.42	3 357 kg (7,400 lb)	5 897 kg (13,000 lb)
6.0L V8	3.42	4 536 kg (10,000 lb)	7 258 kg (16,000 lb)
G3500 Cargo Van 2WD Long Wheelbase			
4.3L V6	3.42	3 265 kg (7,200 lb)	5 897 kg (13,000 lb)
6.0L V8	3.42	4 536 kg (10,000 lb)	7 258 kg (16,000 lb)
G3500 Passenger Van 2WD Short Wheelbase			
4.3L V6	3.42	3 039 kg (6,700 lb)	5 897 kg (13,000 lb)
6.0L V8	3.42	4 355 kg (9,600 lb)	7 258 kg (16,000 lb)

Vehicle	Axle Ratio	Maximum Trailer Weight	GCWR (a)
G3500 Passenger Van 2WD Long Wheelbase			
4.3L V6	3.42	2 858 kg (6,300 lb)	5 897 kg (13,000 lb)
6.0L V8	3.42	4 173 kg (9,200 lb)	7 258 kg (16,000 lb)
3500 Series Cutaway – 353 cm (139 in) Wheelbase			
4.3L V6	3.42/3.73	(b)	5 897 kg (13,000 lb)
6.0L V8	3.42/3.73	(b)	7 258 kg (16,000 lb)
3500 Series Cutaway – 404 cm (159 in) Wheelbase			
4.3L V6	3.42/3.73	(b)	5 897 kg (13,000 lb)
6.0L V8	3.42/3.73	(b)	7 258 kg (16,000 lb)
6.0L V8	4.10	(b)	8 618 kg (19,000 lb)
6.0L V8	4.10	(b)	9 072 kg (20,000 lb)
3500 Series Cutaway – 450 cm (177 in) Wheelbase			
6.0L V8	3.42/3.73	(b)	7 258 kg (16,000 lb)
6.0L V8	4.10	(b)	8 618 kg (19,000 lb)
6.0L V8	4.10	(b)	9 072 kg (20,000 lb)

(a) The Gross Combined Weight Rating (GCWR) is the total allowable weight of the completely loaded vehicle and trailer including any passengers, cargo, equipment, and conversion. The GCWR for the vehicle should not be exceeded.
(b) Maximum Trailer Weight cannot be provided because total vehicle weight is unknown.

Ask your dealer for trailering information or advice.

Weight of the Trailer Tongue

The tongue load (1) of any trailer is an important weight to measure because it affects the total gross weight of the vehicle. The Gross Vehicle Weight (GVW) includes the curb weight of the vehicle, any cargo carried in it, and the people who will be riding in the vehicle. If there are a lot of options, equipment, passengers, or cargo in the vehicle, it will reduce the tongue weight the vehicle can carry, which will also reduce the trailer weight the vehicle can tow. If towing a trailer, the tongue load must be added to the GVW because the vehicle will be carrying that weight, too. See *Vehicle Load Limits* ⇨ *169* for more information about the vehicle's maximum load capacity.

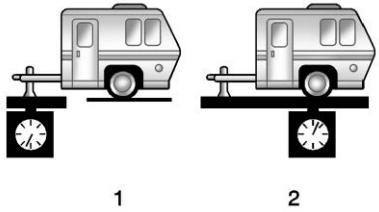

In general, trailer tongue weight (1) should be 10–15% of the total loaded trailer weight (2). Some specific trailer types, such as boat trailers, fall outside of this range. Refer to the trailer owner's manual for the recommended trailer tongue weight. In all cases, do not exceed the maximum loads for the vehicle series and hitch type.

Do not exceed the maximum allowable tongue weight for the vehicle. Choose the shortest hitch extension that will position the hitch ball closest to the vehicle. This will help reduce the effect of trailer tongue weight on the rear axle.

After loading the trailer, weigh the trailer and then the tongue, separately, to see if the weights are proper. If they are not, adjustments might be made by moving some items around in the trailer.

Trailering may be limited by the vehicle's ability to carry tongue weight. Tongue weight cannot cause the vehicle to exceed the GVWR (Gross Vehicle Weight Rating) or the RGAWR (Rear Gross Axle Weight Rating). The effect of additional weight may reduce the trailering capacity more than the total of the additional weight.

It is important that the vehicle does not exceed any of its ratings — GCWR, GVWR, RGAWR, Maximum Trailer Rating, or Tongue Weight. The only way to be sure it is not exceeding any of these ratings is to weigh the vehicle and trailer.

Total Weight on the Vehicle's Tires

Be sure the vehicle tires are inflated to the upper limit for cold tires. These numbers can be found on the

Certification label at the rear edge of the driver door, or see *Vehicle Load Limits* ⇨ *169*. Make sure not to go over the GVW limit for the vehicle, or the GAWR, including the weight of the trailer tongue. If using a weight distributing hitch, make sure not to go over the rear axle limit before applying the weight distribution spring bars.

Towing Equipment

Hitches

The correct hitch equipment helps maintain combination control. Many trailers can be towed with a weight-carrying hitch which simply features a coupler latched to the hitch ball, or a tow eye latched to a pintle hook. Other trailers may require a weight-distributing hitch that uses spring bars to distribute the trailer tongue weight among the two vehicle and trailer axles. See "Weight of the Trailer Tongue" under *Trailer Towing* ⇨ *205* for rating limits with various hitch types.

Consider using sway controls with any trailer. Ask a trailering professional about sway controls or refer to the trailer manufacturer's recommendations and instructions.

Weight-Distributing Hitches and Weight Carrying Hitches

A weight distributing hitch may be useful with some trailers.

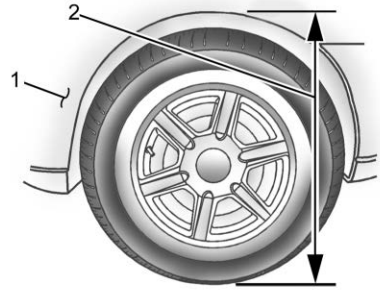

1. Front of Vehicle
2. Body to Ground Distance

When using a weight-distributing hitch, the hitch must be adjusted so the distance (2) remains the same both before and after coupling the trailer to the tow vehicle.

Safety Chains

Always attach chains between the vehicle and the trailer. Cross the safety chains under the tongue of the trailer to help prevent the tongue from contacting the road if it becomes separated from the hitch. Always leave just enough slack so the rig can turn. Never allow safety chains to drag on the ground.

Trailer Brakes

A loaded trailer that weighs more than 680 kg (1,500 lb) must be equipped with its own brake system, with brakes working on all axles. Trailer braking equipment conforming to Canadian Standards Association (CSA) requirement CAN3-D313, or its equivalent, is recommended.

State and local regulations may also require the trailer to have its own braking system if loaded above a certain threshold. These requirements vary from state to state.

Be sure to read and follow the instructions for the trailer brakes so they are installed, adjusted, and maintained properly.

Do not tap into the vehicle's hydraulic brake system.

Trailer Wiring Harness

The optional heavy-duty trailer wiring package includes a wiring harness, with a seven-pin connector at the rear of the vehicle and a four-wire harness assembly under the driver side of the instrument panel. The four-wire harness assembly comes without a connector.

If the vehicle does not have a trailer hitch, the seven-wire harness assembly with connector is taped together and located in a frame pocket at the driver side rear left corner of the frame.

If the vehicle has a trailer hitch, the seven-wire harness assembly with connector is attached to a bracket on the hitch platform. In both cases, the seven-wire harness has a connector and includes a 30-amp feed wire.

Use only a round, seven-wire connector with flat blade terminals meeting SAE J2863 specifications for proper electrical connectivity.

The seven-wire harness connector contains the following trailer circuits:

- Light Green: Back-up Lamps (10A fuse)**
- White: Ground
- Dark Blue: Trailer Brake Signal
- Dark Green: Right Rear Stop and Turn Signal*
- Red/Black Stripe: Battery Feed (30A Fuse)
- Brown: Trailer Park Lamp Supply Voltage (15A fuse)**
- Yellow: Left Rear Stop and Turn Signal *

The four-wire harness (without connector) contains the following circuits:

- Black: Ground
- Red/White: Battery Feed
- Dark Blue: Trailer Brake Signal
- Light Blue: CHMSL/Stoplamp Supply Voltage

* If the vehicle is a cutaway with trailer provisions, a 15 amp fuse will be shared for both left/stop trailer turn and right/stop trailer turn signals. However, the cutaway lighting connector will have a 10 amp fuse for each signal.

** If the vehicle is a cutaway with trailer provisions, a 15 amp fuse will be shared for trailer park lamps and cutaway rear lighting connector park lamps. Also, a 10 amp fuse will be shared for trailer back-up lamps and cutaway rear lighting connector back-up lamps.

Tow/Haul Mode

This button is on the instrument panel, to the right of the steering wheel.

Pressing this button turns on and off the Tow/Haul Mode.

This indicator light on the instrument cluster comes on when the Tow/Haul Mode is on.

Tow/Haul is a feature that assists when pulling a heavy trailer or a large or heavy load. See *Tow/Haul Mode* ⇨ *185*.

Tow/Haul is designed to be most effective when the vehicle and trailer combined weight is at least 75 percent of the vehicle Gross Combined Weight Rating (GCWR). See “Weight of the Trailer” in *Trailer Towing* ⇨ *205*. Tow/Haul is most useful under the following driving conditions:

- When pulling a heavy trailer or a large or heavy load through rolling terrain.
- When pulling a heavy trailer or a large or heavy load in stop-and-go traffic.
- When pulling a heavy trailer or a large or heavy load in busy parking lots where improved low speed control of the vehicle is desired.

Operating the vehicle in Tow/Haul Mode when lightly loaded or with no trailer at all will not cause damage. However, there is no benefit to the selection of Tow/Haul when the vehicle is unloaded. Such a selection when unloaded may result in unpleasant engine and transmission driving characteristics and reduced fuel economy. Tow/Haul is recommended only when pulling a heavy trailer or a large or heavy load.

Trailer Sway Control (TSC)

Trailer sway is unintended side-to-side motion of a trailer while being towed. If the vehicle is towing a trailer and the TSC detects that sway is increasing, the vehicle brakes are selectively applied at each wheel, to help reduce excessive trailer sway.

When TSC is active, the Traction Control System (TCS)/StabiliTrak warning light will flash on the instrument cluster. Vehicle speed must be reduced. If trailer sway continues, StabiliTrak can reduce engine torque to help slow the vehicle. See *Traction Control/ Electronic Stability Control* ⇨ *188*.

⚠ Warning

Even if the vehicle is equipped with TSC, trailer sway could result in loss of control and the vehicle could crash. If excessive trailer sway is detected, slow down to a

(Continued)

Warning (Continued)

safe speed. Check the trailer and vehicle to help correct possible causes. These could include an improperly or overloaded trailer, unrestrained cargo, improper trailer hitch configuration, excessive vehicle-trailer speed, or improperly inflated or incorrect vehicle or trailer tires. See *Towing Equipment* ⇨ *209* for trailer ratings and hitch setup recommendations.

Adding non-dealer accessories can affect the vehicle performance. See *Accessories and Modifications* ⇨ *215*.

Conversions and Add-Ons

Add-On Electrical Equipment

⚠ Warning

The Data Link Connector (DLC) is used for vehicle service and Emission Inspection/Maintenance testing. See *Malfunction Indicator Lamp (Check Engine Light)* ⇨ *105*. A device connected to the DLC — such as an aftermarket fleet or driver-behavior tracking device — may interfere with vehicle systems. This could affect vehicle operation and cause a crash. Such devices may also access information stored in the vehicle's systems.

Caution

Some electrical equipment can damage the vehicle or cause components to not work and would not be covered by the vehicle warranty. Always check with your dealer before adding electrical equipment.

Add-on equipment can drain the vehicle's 12-volt battery, even if the vehicle is not operating.

The vehicle has an airbag system. Before attempting to add anything electrical to the vehicle, see *Servicing the Airbag-Equipped Vehicle* ⇨ *66* and *Adding Equipment to the Airbag-Equipped Vehicle* ⇨ *67*.

Vehicle Care

General Information

General Information 214
California Proposition 65 Warning 214
California Perchlorate Materials Requirements 215
Accessories and Modifications 215

Vehicle Checks

Doing Your Own Service Work 215
Hood 216
Engine Compartment Overview 217
Engine Oil 220
Engine Oil Life System 222
Automatic Transmission Fluid (6-Speed Transmission) 223
Automatic Transmission Fluid (8-Speed Transmission) 226
Engine Air Cleaner/Filter 227
Cooling System 229
Engine Overheating 233
Engine Fan 234
Power Steering Fluid 235
Washer Fluid 235
Brakes 236
Brake Fluid 237
Battery - North America 238
Rear Axle 239
Noise Control System 240
Starter Switch Check 241
Automatic Transmission Shift Lock Control Function Check 241
Ignition Transmission Lock Check 242
Park Brake and P (Park) Mechanism Check 242
Wiper Blade Replacement 242
Gas Strut(s) 243

Headlamp Aiming

Headlamp Aiming 244

Bulb Replacement

Bulb Replacement 244
Halogen Bulbs 244
Front Turn Signal, Sidemarker, and Parking Lamps 245
Taillamps 245
Center High-Mounted Stoplamp (CHMSL) 246
License Plate Lamp 247

Electrical System

Electrical System Overload . . . 248
Fuses and Circuit Breakers . . . 248
Engine Compartment Fuse Block 248
Floor Console Fuse Block 253

Wheels and Tires

Tires 255
All-Season Tires 256
Winter Tires 256
All-Terrain Tires 256
Tire Sidewall Labeling 257
Tire Designations 259
Tire Terminology and Definitions 260
Tire Pressure 263
Tire Pressure Monitor System 264
Tire Pressure Monitor Operation 265
Tire Inspection 268
Tire Rotation 268
Dual Tire Rotation 270
When It Is Time for New Tires 270
Buying New Tires 271
Different Size Tires and Wheels 273
Uniform Tire Quality Grading 273
Wheel Alignment and Tire Balance 275

Wheel Replacement 275
Tire Chains 276
If a Tire Goes Flat 276
Tire Changing 278
Full-Size Spare Tire 285

Jump Starting
Jump Starting - North America 286

Towing the Vehicle
Towing the Vehicle 289
Recreational Vehicle Towing 290

Appearance Care
Exterior Care 292
Interior Care 296
Floor Mats 300

General Information

For service and parts needs, visit your dealer. You will receive genuine GM parts and GM-trained and supported service people.

Genuine GM parts have one of these marks:

ACDelco®

Genuine GM | Parts

GM Accessories

California Proposition 65 Warning

⚠ Warning

Most motor vehicles, including this one, as well as many of its service parts and fluids, contain and/or emit chemicals known to the State of California to cause cancer and birth defects or other reproductive harm. Engine exhaust, many parts and systems, many fluids, and some component wear by-products contain and/or emit these chemicals. For more information go to www.P65Warnings.ca.gov/passenger-vehicle.

See *Battery - North America* ⇨ *238* and *Jump Starting - North America* ⇨ *286* and the back cover.

California Perchlorate Materials Requirements

Certain types of automotive applications, such as airbag initiators, seat belt pretensioners, and lithium batteries contained in Remote Keyless Entry transmitters, may contain perchlorate materials. Special handling may be necessary. For additional information, see www.dtsc.ca.gov/hazardouswaste/perchlorate.

Accessories and Modifications

Adding non-dealer accessories or making modifications to the vehicle can affect vehicle performance and safety, including such things as airbags, braking, stability, ride and handling, emissions systems, aerodynamics, durability, and electronic systems like antilock brakes, traction control, and stability control. These accessories or modifications could even cause malfunction or damage not covered by the vehicle warranty.

Damage to suspension components caused by modifying vehicle height outside of factory settings will not be covered by the vehicle warranty.

Damage to vehicle components resulting from modifications or the installation or use of non-GM certified parts, including control module or software modifications, is not covered under the terms of the vehicle warranty and may affect remaining warranty coverage for affected parts.

GM Accessories are designed to complement and function with other systems on the vehicle. See your dealer to accessorize the vehicle using genuine GM Accessories installed by a dealer technician.

Also, see *Adding Equipment to the Airbag-Equipped Vehicle* ⇨ *67*.

Vehicle Checks

Doing Your Own Service Work

⚠ Warning

It can be dangerous to work on your vehicle if you do not have the proper knowledge, service manual, tools, or parts. Always follow owner's manual procedures and consult the service manual for your vehicle before doing any service work.

If doing some of your own service work, use the proper service manual. It tells you much more about how to service the vehicle than this manual can. To order the proper service manual, see *Service Publications Ordering Information* ⇨ *327*.

This vehicle has an airbag system. Before attempting to do your own service work, see *Servicing the Airbag-Equipped Vehicle* ⇨ *66*.

Keep a record with all parts receipts and list the mileage and the date of any service work performed. See *Maintenance Records* ⇨ *313*.

Caution
Even small amounts of contamination can cause damage to vehicle systems. Do not allow contaminants to contact the fluids, reservoir caps, or dipsticks.

Hood

To open the hood:

1. Pull the handle with this symbol on it. It is in front of the driver side door frame near the floor.

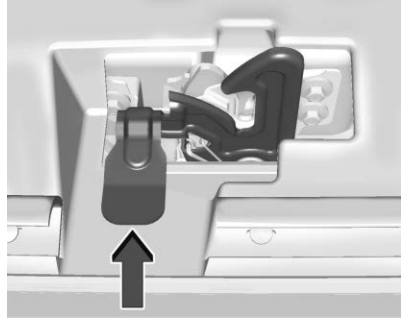

2. Go to the front of the vehicle and lift up the secondary hood release, which is underneath the middle of the hood.

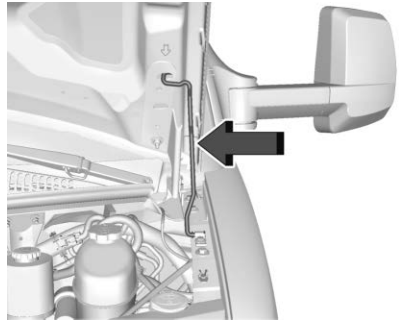

3. Lift the hood, release the hood prop from its retainer, and put the hood prop into the slot in the hood.

If the vehicle has an underhood lamp, it will automatically come on and stay on until the hood is closed.

Before closing the hood, be sure all of the filler caps are on properly. Then lift the hood to relieve pressure on the hood prop. Remove the hood prop from the slot in the hood and return the prop to its retainer. Let the hood down and close it firmly.

Engine Compartment Overview

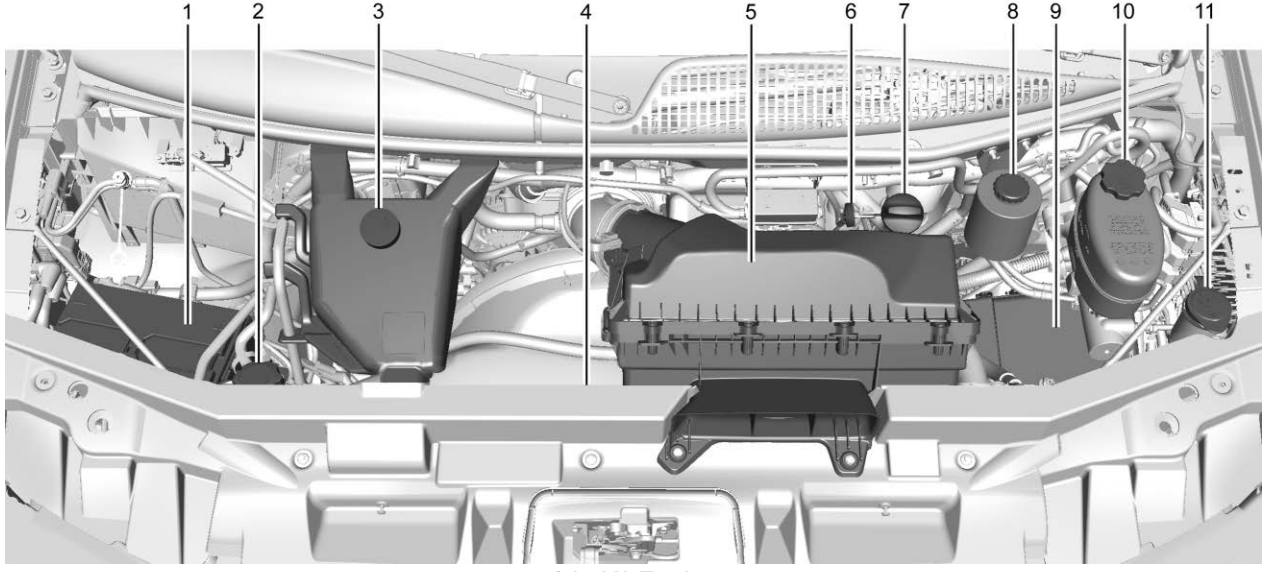

4.3L V6 Engine

1. *Battery - North America* ⇨ *238*.
2. Radiator Pressure Cap. See *Cooling System* ⇨ *229*.
3. Coolant Recovery Tank. See *Cooling System* ⇨ *229*.
4. Engine Cooling Fan (Out of View). See *Cooling System* ⇨ *229*.
5. *Engine Air Cleaner/Filter* ⇨ *227*.
6. Engine Oil Dipstick. See “Checking Engine Oil” under *Engine Oil* ⇨ *220*.
7. Engine Oil Fill Cap. See “When to Add Engine Oil” under *Engine Oil* ⇨ *220*.
8. Power Steering Fluid Reservoir. See *Power Steering Fluid* ⇨ *235*.
9. *Engine Compartment Fuse Block* ⇨ *248*.
10. Brake Master Cylinder Reservoir. See *Brake Fluid* ⇨ *237*.
11. Windshield Washer Fluid Reservoir. See “Adding Washer Fluid” under *Washer Fluid* ⇨ *235*.

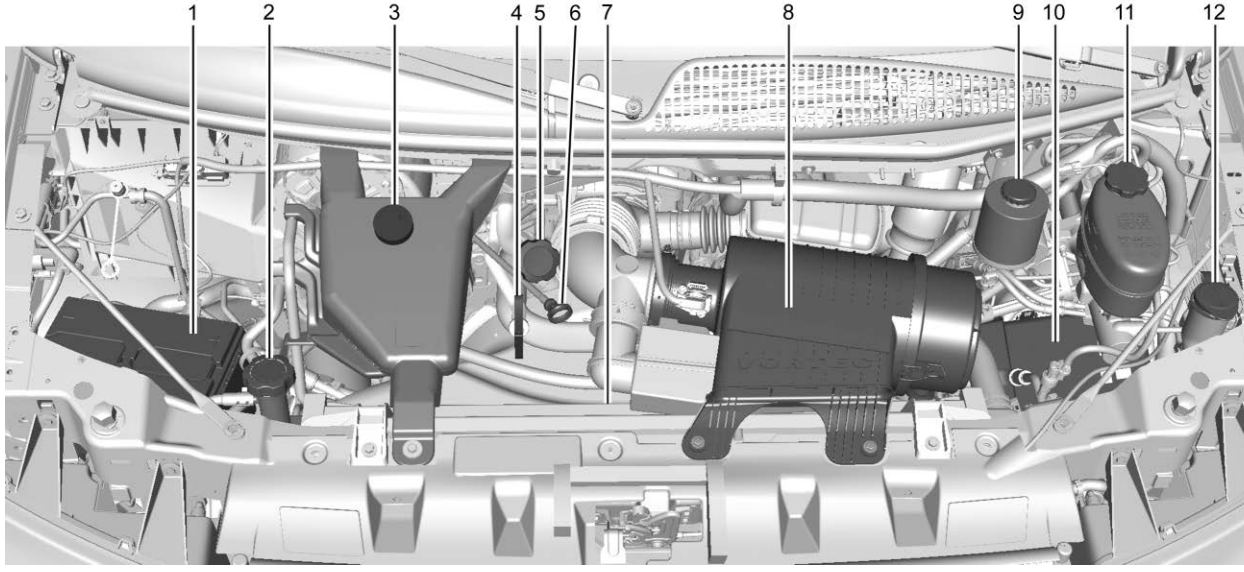

6.0L V8 Engine

1. *Battery - North America* ⇨ *238*.
2. Radiator Pressure Cap. See *Cooling System* ⇨ *229*.
3. Coolant Recovery Tank. See *Cooling System* ⇨ *229*.
4. Automatic Transmission Fluid Dipstick. See “Checking the Fluid Level” under *Automatic Transmission Fluid (6-Speed Transmission)* ⇨ *223* or *Automatic Transmission Fluid (8-Speed Transmission)* ⇨ *226*.
5. Engine Oil Fill Cap. See “When to Add Engine Oil” under *Engine Oil* ⇨ *220*.
6. Engine Oil Dipstick. See “Checking Engine Oil” under *Engine Oil* ⇨ *220*.
7. Engine Cooling Fan (Out of View). See *Cooling System* ⇨ *229*.
8. *Engine Air Cleaner/Filter* ⇨ *227*.
9. Power Steering Fluid Reservoir. See *Power Steering Fluid* ⇨ *235*.
10. *Engine Compartment Fuse Block* ⇨ *248*.
11. Brake Master Cylinder Reservoir. See *Brake Fluid* ⇨ *237*.
12. Windshield Washer Fluid Reservoir. See “Adding Washer Fluid” under *Washer Fluid* ⇨ *235*.

Engine Oil

For diesel engine vehicles, see “Engine Oil” in the Duramax diesel supplement.

To ensure proper engine performance and long life, careful attention must be paid to engine oil. Following these simple, but important steps will help protect your investment:

- Use engine oil approved to the proper specification and of the proper viscosity grade. See “Selecting the Right Engine Oil” in this section.
- Check the engine oil level regularly and maintain the proper oil level. See “Checking Engine Oil” and “When to Add Engine Oil” in this section.
- Change the engine oil at the appropriate time. See *Engine Oil Life System* ⇨ *222*.
- Always dispose of engine oil properly. See “What to Do with Used Oil” in this section.

Checking Engine Oil

Check the engine oil level regularly, every 650 km (400 mi), especially prior to a long trip. The engine oil dipstick handle is a loop. See *Engine Compartment Overview* ⇨ *217* for the location.

⚠ Warning

The engine oil dipstick handle may be hot; it could burn you. Use a towel or glove to touch the dipstick handle.

If a low oil Driver Information Center (DIC) message displays, check the oil level.

Follow these guidelines:

- To get an accurate reading, park the vehicle on level ground. Check the engine oil level after the engine has been off for at least two hours. Checking the engine oil level on steep grades or too soon after engine shutoff can result in incorrect readings. Accuracy improves when checking a cold engine prior to starting. Remove the dipstick and check the level.
- If unable to wait two hours, the engine must be off for at least 15 minutes if the engine is warm, or at least 30 minutes if the engine is not warm. Pull out the dipstick, wipe it with a clean paper towel or cloth, then push it back in all the way. Remove it again, keeping the tip down, and check the level.

When to Add Engine Oil

4.3L V6 Engine

6.0L V8 Engine

If the oil is below the cross-hatched area at the tip of the dipstick and the engine has been off for at least 15 minutes, add 1 L (1 qt) of the recommended oil and then recheck the level. See “Selecting the Right Engine Oil” later in this section for an explanation of what kind of oil to use. For engine oil crankcase capacity, see *Capacities and Specifications* ⇨ *315*.

Caution

Do not add too much oil. Oil levels above or below the acceptable operating range shown on the dipstick are harmful to the engine. If you find that you have an oil level above the operating range, i.e., the engine has so much oil that the oil level gets above the cross-hatched area that shows the proper operating range, the engine could be damaged. You should drain out the excess oil or limit driving of the vehicle and seek a service professional to remove the excess amount of oil.

See *Engine Compartment Overview* ⇨ *217* for the location of the engine oil fill cap.

Add enough oil to put the level somewhere in the proper operating range. Push the dipstick all the way back in when through.

Selecting the Right Engine Oil

Selecting the right engine oil depends on both the proper oil specification and viscosity grade. See *Recommended Fluids and Lubricants* ⇨ *310*.

Specification

Ask for and use engine oils that meet the dexos1 specification. Engine oils that have been approved by GM as meeting the dexos1 specification are marked with the dexos1 approved logo. See www.gmdexos.com.

Caution
Failure to use the recommended engine oil or equivalent can result in engine damage not covered by the vehicle warranty.

Viscosity Grade

Use SAE 5W-30 viscosity grade engine oil.

Cold Temperature Operation: In an area of extreme cold, where the temperature falls below −29 °C (−20 °F), an SAE 0W-30 oil may be used. An oil of this viscosity grade will provide easier cold starting for the engine at extremely low temperatures. When selecting an oil of the appropriate viscosity grade, it is recommended to select an oil of the correct specification. See “Specification” earlier in this section.

Engine Oil Additives/Engine Oil Flushes

Do not add anything to the oil. The recommended oils meeting the dexos1 specification are all that is needed for good performance and engine protection.

Engine oil system flushes are not recommended and could cause engine damage not covered by the vehicle warranty.

What to Do with Used Oil

Used engine oil contains certain elements that can be unhealthy for your skin and could even cause cancer. Do not let used oil stay on your skin for very long. Clean your skin and nails with soap and water, or a good hand cleaner. Wash or properly dispose of clothing or rags containing used engine oil. See the manufacturer's warnings about the use and disposal of oil products.

Used oil can be a threat to the environment. If you change your own oil, be sure to drain all the oil from the filter before disposal. Never dispose of oil by putting it in the trash or pouring it on the ground, into sewers, or into streams or bodies of water. Recycle it by taking it to a place that collects used oil.

Engine Oil Life System

When to Change Engine Oil

This vehicle has a computer system that indicates when to change the engine oil and filter. This is based on a combination of factors which

include engine revolutions, engine temperature, and miles driven. Based on driving conditions, the mileage at which an engine oil change is indicated can vary considerably. For the oil life system to work properly, the system must be reset every time the oil is changed.

When the system has calculated that oil life has been diminished, it indicates that an oil change is necessary. A CHANGE ENGINE OIL SOON message comes on. Change the oil as soon as possible within the next 1 000 km (600 mi). It is possible that, if driving under the best conditions, the oil life system might indicate that an oil change is not necessary for up to a year. The engine oil and filter must be changed at least once a year and, at this time, the system must be reset. Your dealer has trained service people who will perform this work and reset the system. It is also important to check the oil regularly over the course of an oil drain interval and keep it at the proper level.

If the system is ever reset accidentally, the oil must be changed at 5 000 km (3,000 mi) since the last oil change. Remember to reset the oil life system whenever the oil is changed.

How to Reset the Engine Oil Life System

Reset the system whenever the engine oil is changed so that the system can calculate the next engine oil change.

To reset the Engine Oil Life System on most models:

1. Display the OIL LIFE REMAINING on the DIC. See *Driver Information Center (DIC)* ⇨ *111*.
2. Press and hold ✓ on the DIC while the Oil Life display is active. The oil life will change to 100%.

The oil life system can also be reset as follows:

1. Display the OIL LIFE REMAINING on the DIC. See *Driver Information Center (DIC)* ⇨ *111*.
2. Fully press and release the accelerator pedal three times within five seconds. If the display shows 100%, the system is reset.

If the CHANGE ENGINE OIL SOON message comes back on when the vehicle is started, the engine oil life system has not reset. Repeat the procedure.

Automatic Transmission Fluid (6-Speed Transmission)

When to Check and Change Automatic Transmission Fluid

It is usually not necessary to check the transmission fluid level. The only reason for fluid loss is a transmission leak or overheated transmission. If a small leak is

suspected, use the following procedures to check the fluid level. However, if there is a large leak, it may be necessary to have the vehicle towed to a dealer and have it repaired before driving the vehicle further.

Change the fluid and filter at the intervals listed in *Maintenance Schedule* ⇨ *303*, and be sure to use the transmission fluid listed in *Recommended Fluids and Lubricants* ⇨ *310*.

How to Check Automatic Transmission Fluid

Because this operation can be difficult, it is recommended to have this check done at your dealer, which can monitor the transmission temperature. The transmission fluid level increases with temperature. To obtain a highly accurate fluid level check, the transmission temperature must be measured.

If it is decided to check the fluid level, be sure to follow all the instructions here, or a false reading on the dipstick may occur.

Caution

Too much or too little fluid can damage the transmission. Too much can mean that some of the fluid could come out and fall on hot engine parts or exhaust system parts, starting a fire. Too little fluid could cause the transmission to overheat. Be sure to get an accurate reading if checking the transmission fluid.

Wait at least 30 minutes with the engine off, before checking the transmission fluid level if the vehicle has been driven:

- In hot weather, when outside temperatures are above 32 °C (90 °F).
- The vehicle is heavily loaded.
- At high speed for quite a while in hot weather.
- In heavy traffic and hot weather.
- While pulling a trailer.

After driving under these conditions, a hot check can be performed. The fluid should be hot, which is 71 °C to 93 °C (160 °F to 200 °F).

A cold fluid level check can be performed after the vehicle has been sitting for eight hours or more with the engine off, but this is used only as a reference. Let the engine run at idle for five minutes if the outside temperature is between 15 °C to 32 °C (60 °F to 90 °F). Should the fluid level be low during this cold check, the fluid must be checked warm or hot before adding fluid. If the outside temperature is colder than 15 °C (60 °F) or hotter than 32 °C (90 °F), a cold check cannot be performed.

A warm fluid level check can be performed by driving the vehicle under lightly loaded conditions and outside temperatures between 10 °C to 27 °C (50 °F to 80 °F). The vehicle should be driven for at least 24 km (15 mi) before performing a warm check. Checking the fluid

warm or hot will give a more accurate reading of the fluid level than a cold check.

Because the vehicle is equipped with a high-efficiency air-to-oil cooler, the transmission fluid temperature may not reach the required hot fluid level checking temperature under normal lightly loaded driving vehicle conditions.

Checking the Fluid Level

Prepare the vehicle:

1. Park the vehicle on a level place. Keep the engine running.
2. With the parking brake applied, place the shift lever in P (Park).
3. With a foot on the brake pedal, move the shift lever through each gear range, pausing for about three seconds in each range. When M is reached, move the selector from M1 through M3. Then, position the shift lever in P (Park).
4. Let the engine run at idle for two minutes or more.

Then, without shutting off the engine, use the steps that follow.

The transmission dipstick is near the center of the engine compartment and will be labeled with the graphic shown.

See *Engine Compartment Overview* ⇨ *217* for more information on location.

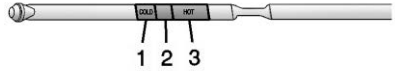

1. COLD Range
2. WARM Range
3. HOT Range

1. Flip the handle up, pull out the dipstick, and wipe it with a clean rag or paper towel.
2. Push it back in all the way, wait three seconds, and pull it back out again.
3. Check both sides of the dipstick, and read the lower level. The fluid level must be in the COLD (1) range for a cold check, transmission temperature 27 °C to 32 °C (80 °F to 90 °F); between the COLD (1) and HOT (3) range for a WARM (2) check, 50 °C to 60 °C (122 °F to 140 °F); or in the HOT (3) cross-hatched range for a hot check, 71 °C to 93 °C (160 °F to 200 °F). Be sure to keep the dipstick pointed down to get an accurate reading.
4. If the fluid level is in the acceptable range, push the dipstick back in all the way; then flip the handle down to lock the dipstick in place.

How to Add Automatic Transmission Fluid

Refer to *Recommended Fluids and Lubricants* ⇨ *310* to determine what kind of transmission fluid to use.

1. WARM Range
2. HOT Range

Using a funnel, add fluid down the transmission dipstick tube only after checking the transmission fluid while it is warm or hot. A cold check is used only as a reference. If the fluid level is low, add only enough of the proper fluid to bring the level up to the middle of the WARM (1) or HOT (2) range depending on the ambient temperature and prior driving conditions. Refer to “How to Check Automatic Transmission Fluid” earlier in this section for instructions on driving to achieve warm or hot transmission fluid. It does not take much fluid, generally less than 0.5 L (1 pt). Do not overfill.

Caution

Use of the incorrect automatic transmission fluid may damage the vehicle, and the damage may not be covered by the vehicle warranty. Always use the automatic transmission fluid listed in *Recommended Fluids and Lubricants* ⇨ *310*.

- After adding fluid, recheck the fluid level as described under “How to Check Automatic Transmission Fluid,” earlier in this section.
- When the correct fluid level is obtained, push the dipstick back in all the way; then flip the handle down to lock the dipstick in place.

Automatic Transmission Fluid (8-Speed Transmission)

When to Check and Change Automatic Transmission Fluid

It is usually not necessary to check the transmission fluid level. The only reason for fluid loss is a transmission leak or overheated transmission. This vehicle is not equipped with a transmission fluid level dipstick. There is a special procedure for checking and changing the transmission fluid in these vehicles. Because this procedure is difficult, this should be done at the dealer. Contact the dealer for additional information or the procedure can be found in the service manual. See *Service Publications Ordering Information* ⇨ *327*.

Caution

Use of the incorrect automatic transmission fluid may damage the vehicle, and the damage may not be covered by the vehicle warranty. Always use the automatic transmission fluid listed in *Recommended Fluids and Lubricants* ⇨ *310*.

Change the fluid and filter at the scheduled maintenance intervals listed in *Maintenance Schedule* ⇨ *303*. Be sure to use the transmission fluid listed in *Recommended Fluids and Lubricants* ⇨ *310*.

Engine Air Cleaner/Filter

The air cleaner/filter assembly is on the front of the engine compartment on the driver side of the vehicle. See *Engine Compartment Overview* ⇨ *217*.

When to Inspect the Engine Air Cleaner/Filter

For intervals on changing and inspecting the engine air filter, see *Maintenance Schedule* ⇨ *303*.

How to Inspect the Engine Air Cleaner/Filter

Do not start the engine or have the engine running with the engine air filter housing open. Before removing the engine air filter, make sure that the engine air filter housing and nearby components are free of dirt and debris. Remove the engine air filter. Lightly tap and shake the engine air filter (away from the vehicle) to release dust and dirt. Inspect the engine air filter for damage, and replace if damaged. Do not clean the engine air filter or components with water or compressed air.

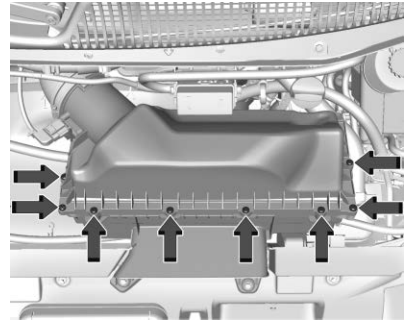

4.3L V6 Engine

To inspect and replace the filter:

1. Remove the eight screws, slide the top cover forward and lift, to gain access to the air cleaner/filter.
2. Remove the air cleaner/filter from the housing base. Take care to dislodge as little dirt as possible.
3. Clean the air cleaner/filter sealing surface and housing base.
4. Install the engine air cleaner/filter in the housing base.

5. Install the top cover by sliding it into position on the housing base, and secure using eight screws.

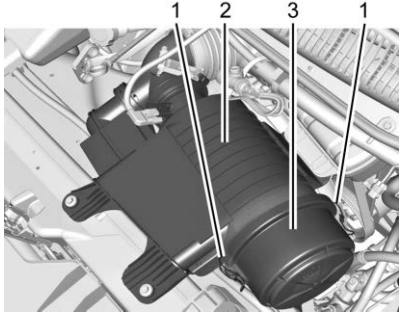

6.0L V8 Engine

1. Retaining Clips
2. Housing Base
3. Housing Cover

To inspect and replace the filter:

1. Unlock the two retaining clips (1) on the sides of the housing cover (3) and on the housing base (2) and pull the cover off.
2. Remove the air cleaner/filter from the housing base. Take care to dislodge as little dirt as possible.
3. Clean the air cleaner/filter sealing surface and housing base.
4. Install the engine air cleaner/filter by aligning the arrow on one side of the air cleaner/filter end cap with the arrow on top of the housing base.
5. Install the housing cover by aligning the arrow on top of the cover to the arrow on top of the housing base, and fasten the two retaining clips.

See *Maintenance Schedule* ⇨ *303* to determine when to replace the engine air cleaner/filter.

⚠ Warning

Operating the engine with the air cleaner/filter off can cause you or others to be burned. The air

(Continued)

Warning (Continued)

cleaner not only cleans the air; it helps to stop flames if the engine backfires. Use caution when working on the engine and do not drive with the air cleaner/filter off.

Caution

If the air cleaner/filter is off, dirt can easily get into the engine, which could damage it. Always have the air cleaner/filter in place when driving.

Cooling System

The cooling system allows the engine to maintain the correct working temperature.

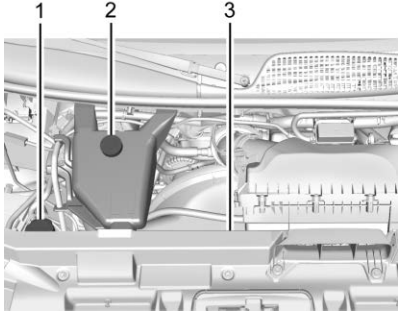

4.3L V6 Engine

1. Radiator Pressure Cap
2. Coolant Recovery Tank
3. Engine Cooling Fan (Out of View)

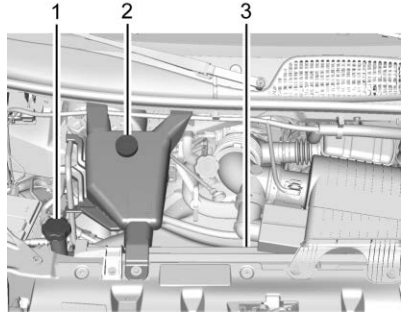

6.0L V8 Engine

1. Radiator Pressure Cap
2. Coolant Recovery Tank
3. Engine Cooling Fan (Out of View)

⚠ Warning

An underhood electric fan can start up even when the engine is not running and can cause injury. Keep hands, clothing, and tools away from any underhood electric fan.

⚠ Warning

Do not touch heater or radiator hoses, or other engine parts. They can be very hot and can burn you. Do not run the engine if there is a leak; all coolant could leak out. That could cause an engine fire and can burn you. Fix any leak before driving the vehicle.

Engine Coolant

The cooling system in the vehicle is filled with DEX-COOL engine coolant. This coolant is designed to remain in the vehicle for 5 years or 240 000 km (150,000 mi), whichever occurs first.

The following explains the cooling system and how to check and add coolant when it is low. If there is a problem with engine overheating, see *Engine Overheating* ⇨ *233*.

What to Use

⚠ Warning

Plain water, or other liquids such as alcohol, can boil before the proper coolant mixture will. With plain water or the wrong mixture, the engine could get too hot but there would not be an overheat warning. The engine could catch fire and you or others could be burned.

Use a 50/50 mixture of clean, drinkable water and DEX-COOL coolant. If using this mixture, nothing else needs to be added. This mixture:

- Gives freezing protection down to −37 °C (−34 °F), outside temperature.
- Gives boiling protection up to 129 °C (265 °F), engine temperature.
- Protects against rust and corrosion.
- Will not damage aluminum parts.
- Helps keep the proper engine temperature.

Caution

Do not use anything other than a mix of DEX-COOL coolant that meets GM Standard GMW3420 and clean, drinkable water. Anything else can cause damage to the engine cooling system and the vehicle, which would not be covered by the vehicle warranty.

Never dispose of engine coolant by putting it in the trash, pouring it on the ground, or into sewers, streams, or bodies of water. Have the coolant changed by an authorized service center, familiar with legal requirements regarding used coolant disposal. This will help protect the environment and your health.

Checking Coolant

The vehicle must be on a level surface when checking the coolant level.

Check to see if coolant is visible in the coolant recovery tank. If the coolant inside the coolant recovery tank is boiling, do not do anything else until it cools down. If coolant is visible but the coolant level is not at or above the indicated mark, add a 50/50 mixture of clean, drinkable water and DEX-COOL coolant at the coolant recovery tank, but be sure the cooling system is cool before this is done.

The coolant recovery tank cap has this symbol on it.

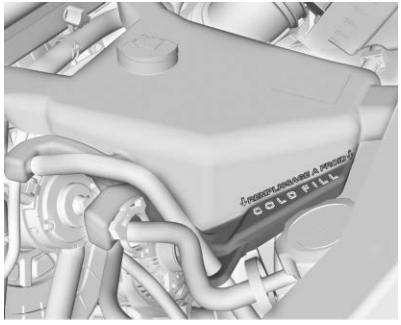

When the engine is cold, the coolant level should be at or above the COLD FILL mark. If it is not, there could be a leak in the cooling system.

If the coolant is low, add the coolant or take the vehicle to a dealer for service.

How to Add Coolant to the Recovery Tank for Gasoline Engines

⚠ Warning

Spilling coolant on hot engine parts can burn you. Coolant contains ethylene glycol and it will burn if the engine parts are hot enough.

⚠ Warning

Plain water, or other liquids such as alcohol, can boil before the proper coolant mixture will. With plain water or the wrong mixture, the engine could get too hot but there would not be an overheat warning. The engine could catch fire and you or others could be burned.

⚠ Warning

Steam and scalding liquids from a hot cooling system are under pressure. Turning the pressure cap, even a little, can cause them to come out at high speed and you could be burned. Never turn the cap when the cooling system, including the pressure cap, is hot. Wait for the cooling system and pressure cap to cool.

Caution

Failure to follow the specific coolant fill procedure could cause the engine to overheat and could cause system damage. If coolant is not visible in the surge tank, contact your dealer.

If coolant is needed, add the proper DEX-COOL coolant mixture at the coolant recovery tank.

How to Add Coolant to the Radiator

⚠ Warning

Steam and scalding liquids from a hot cooling system are under pressure. Turning the pressure cap, even a little, can cause them to come out at high speed and you could be burned. Never turn the cap when the cooling system, including the pressure cap, is hot. Wait for the cooling system and pressure cap to cool.

If coolant is needed, add the proper mixture directly to the radiator, but be sure the cooling system is cool before this is done.

1. Remove the radiator pressure cap when the cooling system, including the radiator pressure cap and upper radiator hose, is no longer hot. Turn the pressure cap slowly counterclockwise until it first stops. Do not press down while turning the pressure cap.

   If a hiss is heard, wait for that to stop. A hiss means there is still some pressure left.

2. Keep turning the pressure cap, but now push down as you turn it. Remove the pressure cap.

3. Fill the radiator with the proper mixture, up to the base of the filler neck. See *Recommended Fluids and Lubricants* ⇨ *310* for more information about the proper coolant mixture.

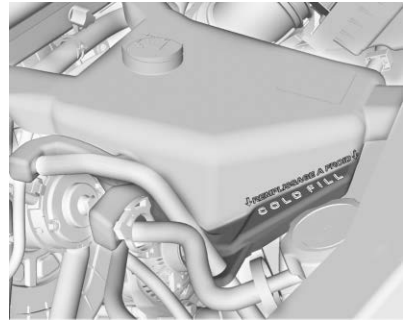

4. Remove the coolant recovery tank cap and fill to the COLD FILL mark.

5. Reinstall the cap back on the coolant recovery tank, but leave the radiator pressure cap off.

6. Start the engine and let it run until the upper radiator hose can be felt getting hot. Watch out for the engine cooling fan.

7. By this time, the coolant level inside the radiator filler neck may be lower. If the level is lower, add more of the proper

mixture through the filler neck until the level reaches the base of the filler neck.

8. Replace the pressure cap. At any time during this procedure if coolant begins to flow out of the filler neck, reinstall the pressure cap.

Caution

If the pressure cap is not tightly installed, coolant loss and engine damage may occur. Be sure the cap is properly and tightly secured.

Engine Overheating

If the vehicle has a diesel engine, see the Duramax diesel supplement.

Caution

Do not run the engine if there is a leak in the engine cooling system. This can cause a loss of all coolant and can damage the system and vehicle. Have any leaks fixed right away.

The vehicle has an indicator to warn of engine overheating.

There is an engine coolant temperature gauge on the vehicle's instrument cluster. See *Engine Coolant Temperature Gauge* ⇨ *101*.

If the decision is made not to lift the hood when this warning appears, but instead get service help right away, see *Roadside Assistance Program* ⇨ *322*.

If the decision is made to lift the hood, make sure the vehicle is parked on a level surface.

Then check to see if the engine cooling fans are running. If the engine is overheating, the fan should be running. If it is not, do not continue to run the engine and have the vehicle serviced.

See if the engine cooling fan speed increases when idle speed is doubled by pushing the accelerator pedal down. If it does not, the vehicle needs service. Turn off the engine.

If Steam is Coming from the Engine Compartment

⚠ Warning

Steam and scalding liquids from a hot cooling system are under pressure. Turning the pressure cap, even a little, can cause them to come out at high speed and you could be burned. Never turn the cap when the cooling system, including the pressure cap, is hot. Wait for the cooling system and pressure cap to cool.

If No Steam is Coming from the Engine Compartment

If an engine overheat warning is displayed but no steam can be seen or heard, the problem may not be too serious. Sometimes the engine can get a little too hot when the vehicle:

- Climbs a long hill on a hot day.
- Stops after high-speed driving.
- Idles for long periods in traffic.
- Tows a trailer. See “Driving on Grades” under *Trailer Towing* ⇨ *205*.

If the overheat warning is displayed with no sign of steam:

1. Turn the air conditioning off.
2. Turn the heater on to the highest temperature and to the highest fan speed. Open the windows as necessary.
3. When it is safe to do so, pull off the road, shift to P (Park) or N (Neutral) and let the engine idle.

If the engine coolant temperature gauge is no longer in the overheat zone or an overheat warning no longer displays, the vehicle can be driven. Continue to drive the vehicle slowly for about 10 minutes. Keep a safe vehicle distance from the vehicle in front. If the warning does not come back on, continue to drive normally and have the cooling system checked for proper fill and function.

If the warning continues, pull over, stop, and park the vehicle right away.

If there is still no sign of steam, push down the accelerator until the engine speed is about twice as fast as normal idle speed for at least three minutes while parked. If the warning is still on, turn off the engine until it cools down.

If the decision is made not to lift the hood, get service help right away.

Engine Fan

The vehicle has a clutched engine cooling fan. When the clutch is engaged, the fan spins faster to provide more air to cool the engine. In most everyday driving conditions, the fan is spinning slower and the clutch is not fully engaged. This improves fuel economy and reduces fan noise. Under heavy vehicle loading, trailer towing, and/or high outside temperatures, the fan speed increases as the clutch more fully engages, so an increase in fan noise may be heard. This is normal and should not be mistaken as the transmission slipping or making extra shifts. It is merely the cooling system functioning properly. The fan will slow down when additional cooling is not required and the clutch partially disengages.

This fan noise may be heard when starting the engine. It will go away as the fan clutch partially disengages.

Power Steering Fluid

The power steering fluid reservoir is in the engine compartment on the driver side of the vehicle. See *Engine Compartment Overview* ⇨ *217* for reservoir location.

When to Check Power Steering Fluid

It is not necessary to regularly check power steering fluid unless there is a leak suspected in the system or an unusual noise is heard. A fluid loss in this system could indicate a problem. Have the system inspected and repaired.

How to Check Power Steering Fluid

To check the power steering fluid:

1. Turn the key off and let the engine compartment cool down.
2. Wipe the cap and the top of the reservoir clean.
3. Unscrew the cap and wipe the dipstick with a clean rag.
4. Replace the cap and completely tighten it.
5. Remove the cap again and look at the fluid level on the dipstick.

The level should be at the COLD FILL mark. If necessary, add only enough fluid to bring the level up to the mark.

To prevent contamination of brake fluid, never check or fill the power steering reservoir with the brake master cylinder cover off.

What to Use

Caution

Use of the incorrect fluid may damage the vehicle and the damages may not be covered by the vehicle warranty. Always use the correct fluid listed in *Recommended Fluids and Lubricants* ⇨ *310*.

To determine what kind of fluid to use, see *Recommended Fluids and Lubricants* ⇨ *310*. Always use the proper fluid. Failure to use the proper fluid can cause leaks and damage hoses and seals.

Washer Fluid

What to Use

When the vehicle needs windshield washer fluid, be sure to read the manufacturer's instructions before use. If operating the vehicle in an area where the temperature may fall

below freezing, use a fluid that has sufficient protection against freezing.

Adding Washer Fluid

Open the cap with the washer symbol on it. Add washer fluid until the tank is full. See *Engine Compartment Overview* ⇨ *217* for reservoir location.

Caution

- Do not use washer fluid that contains any type of water repellent coating. This can cause the wiper blades to chatter or skip.

(Continued)

Caution (Continued)

- Do not use engine coolant (antifreeze) in the windshield washer. It can damage the windshield washer system and paint.
- Do not mix water with ready-to-use washer fluid. Water can cause the solution to freeze and damage the washer fluid tank and other parts of the washer system.
- When using concentrated washer fluid, follow the manufacturer instructions for adding water.
- Fill the washer fluid tank only three-quarters full when it is very cold. This allows for fluid expansion if freezing occurs, which could damage the tank if it is completely full.

Brakes

Disc brake pads have built-in wear indicators that make a high-pitched warning sound when the brake pads are worn and new pads are needed. The sound can come and go or can be heard all the time when the vehicle is moving, except when applying the brake pedal firmly.

⚠ Warning

The brake wear warning sound means that soon the brakes will not work well. That could lead to a crash. When the brake wear warning sound is heard, have the vehicle serviced.

Caution

Continuing to drive with worn-out brake pads could result in costly brake repair.

Some driving conditions or climates can cause a brake squeal when the brakes are first applied or lightly applied. This does not mean something is wrong with the brakes.

Properly torqued wheel nuts are necessary to help prevent brake pulsation. When tires are rotated, inspect brake pads for wear and evenly tighten wheel nuts in the proper sequence to torque specifications. See *Capacities and Specifications* ⇨ *315*.

Brake pads should be replaced as complete sets.

Brake Pedal Travel

See your dealer if the brake pedal does not return to normal height, or if there is a rapid increase in pedal travel. This could be a sign that brake service may be required.

Replacing Brake System Parts

Always replace brake system parts with new, approved replacement parts. If this is not done, the brakes may not work properly. The braking performance expected can change in many other ways if the wrong replacement brake parts are installed or if parts are improperly installed.

Brake Fluid

The brake master cylinder reservoir is filled with DOT 3 brake fluid. See *Engine Compartment Overview* ⇨ *217* for the location of the reservoir.

There are only two reasons why the brake fluid level in the reservoir may go down:

- Normal brake lining wear. When new linings are installed, the fluid level goes back up.
- A fluid leak in the brake hydraulic system. Have the brake hydraulic system fixed. With a leak, the brakes will not work well.

Always clean the brake fluid reservoir cap and the area around the cap before removing it.

Do not top off the brake fluid. Adding fluid does not correct a leak. If fluid is added when the linings are worn, there will be too much fluid when new brake linings are installed. Add or remove fluid, as necessary, only when work is done on the brake hydraulic system.

⚠ Warning

If too much brake fluid is added, it can spill on the engine and burn, if the engine is hot enough. You or others could be burned, and the vehicle could be damaged. Add brake fluid only when work is done on the brake hydraulic system.

When the brake fluid falls to a low level, the brake warning light comes on. See *Brake System Warning Light* ⇨ *107*.

Brake fluid absorbs water over time. Replace brake fluid at the specified intervals to prevent increased stopping distance. See *Maintenance Schedule* ⇨ *303*.

Checking Brake Fluid

Check brake fluid by looking at the brake fluid reservoir. See *Engine Compartment Overview* ⇨ *217*.

The fluid level should be above MIN. If it is not, have the brake hydraulic system checked to see if there is a leak.

After work is done on the brake hydraulic system, make sure the level is above MIN but not over the MAX mark.

What to Add

Use only GM approved DOT 3 brake fluid from a clean, sealed container. See *Recommended Fluids and Lubricants* ⇨ *310*.

⚠ Warning

The wrong or contaminated brake fluid could result in damage to the brake system. This could result in the loss of braking leading to a possible injury. Always use the proper GM approved brake fluid.

Caution

If brake fluid is spilled on the vehicle's painted surfaces, the paint finish can be damaged. Immediately wash off any painted surface.

Battery - North America

The original equipment battery is maintenance free. Do not remove the cap and do not add fluid.

Refer to the replacement number shown on the original battery label when a new battery is needed. See *Engine Compartment Overview* ⇨ *217* for battery location.

⚠ Warning

WARNING: Battery posts, terminals, and related accessories contain lead and lead compounds, chemicals known to the State of California to cause

(Continued)

Warning (Continued)

cancer and birth defects or other reproductive harm. Batteries also contain other chemicals known to the State of California to cause cancer. **WASH HANDS AFTER HANDLING.** For more information go to www.P65Warnings.ca.gov/passenger-vehicle.

See *California Proposition 65 Warning* ⇨ *214* and the back cover.

Vehicle Storage

⚠ Warning

Batteries have acid that can burn you and gas that can explode. You can be badly hurt if you are not careful. See *Jump Starting - North America* ⇨ *286* for tips on working around a battery without getting hurt.

Infrequent Usage: Remove the black, negative (−) cable from the battery to keep the battery from running down.

Extended Storage: Remove the black, negative (−) cable from the battery or use a battery trickle charger.

Rear Axle

When to Check Lubricant

It is not necessary to regularly check rear axle fluid unless you suspect there is a leak or you hear an unusual noise. A fluid loss could indicate a problem. Have it inspected and repaired.

How to Check Lubricant

To get an accurate reading, the vehicle should be on a level surface.

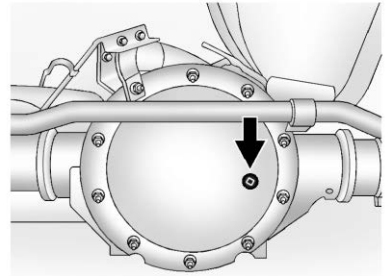

For axles with the fill plug located on the back cover of the rear axle, the proper level is 15 mm to 40 mm (0.59 to 1.57 in) below the bottom of the fill hole.

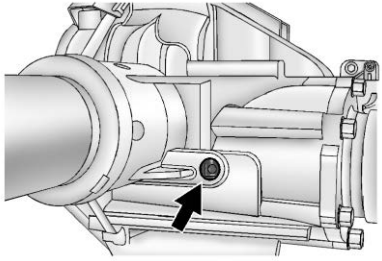

For axles with the fill plug located on the passenger side of the rear axle, the proper level is 0 mm to 10 mm (0 to 0.4 in) below the bottom of the fill hole.

What to Use

Refer to *Recommended Fluids and Lubricants* ⇨ *310* to determine what kind of lubricant to use.

Noise Control System

Noise Emissions Warranty

General Motors warrants to the first person who purchases this vehicle for purposes other than resale and to each subsequent purchaser that this vehicle as manufactured by General Motors, was designed, built and equipped to conform at the time it left General Motors's control with all applicable U.S. EPA Noise Control Regulations. This warranty covers this vehicle as designed, built and equipped by General Motors, and is not limited to any particular part, component or system of the vehicle manufactured by General Motors. Defects in design, assembly or in any part, component or system of the vehicle as manufactured by General Motors, which, at the time it left General Motors's control, caused noise emissions to exceed Federal standards, are covered by this warranty for the life of the vehicle.

The following information relates to compliance with federal noise emission standards for vehicles with a Gross Vehicle Weight Rating (GVWR) of more than 4 536 kg (10,000 lb). The Maintenance Schedule provides information on maintaining the noise control system to minimize degradation of the noise emission control system during the life of the vehicle. The noise control system warranty is given in the warranty manual.

These standards apply only to vehicles sold in the United States.

TAMPERING WITH NOISE CONTROL SYSTEM PROHIBITED

Federal law prohibits the following acts or the causing thereof:

1. The removal or rendering inoperative by any person, other than for purposes of maintenance, repair, or replacement, of any device or element of design incorporated into any new vehicle for the purpose of noise control prior to its sale or delivery to the ultimate purchaser or while it is in use; or

2. The use of the vehicle after such device or element of design has been removed or rendered inoperative by any person.

Among those acts presumed to constitute tampering are the acts listed below.

Insulation:

Removal of the noise shields or any underhood insulation.

Engine:

Removal or rendering the engine speed governor, if equipped, inoperative so as to allow engine speed to exceed manufacturer specifications.

Fan and Drive:

- Removal of the fan clutch, if equipped, or rendering the clutch inoperative.
- Removal of the fan shroud, if equipped.

Air Intake:

- Removal of the air cleaner silencer.
- Modification of the air cleaner.

Exhaust:

- Removal of the muffler and/or resonator.
- Removal of the exhaust pipes and exhaust pipe clamps.

Fuel Operated Heater (FOH) - Diesel Engine:

- Removal of the muffler.

Starter Switch Check

⚠ Warning

When you are doing this inspection, the vehicle could move suddenly. If the vehicle moves, you or others could be injured.

1. Before starting this check, be sure there is enough room around the vehicle.
2. Apply both the parking brake and the regular brake.

   Do not use the accelerator pedal, and be ready to turn off the engine immediately if it starts.
3. Try to start the engine in each gear. The vehicle should start only in P (Park) or N (Neutral). If the vehicle starts in any other position, contact your dealer for service.

Automatic Transmission Shift Lock Control Function Check

⚠ Warning

When you are doing this inspection, the vehicle could move suddenly. If the vehicle moves, you or others could be injured.

1. Before starting this check, be sure there is enough room around the vehicle. It should be parked on a level surface.
2. Apply the parking brake. Be ready to apply the regular brake immediately if the vehicle begins to move.
3. With the engine off, turn the ignition on, but do not start the engine. Without applying the regular brake, try to move the shift lever out of P (Park) with normal effort. If the shift lever moves out of P (Park), contact your dealer for service.

Ignition Transmission Lock Check

While parked, and with the parking brake set, try to turn the ignition off in each shift lever position.

- The ignition should turn to off only when the shift lever is in P (Park).
- The ignition key should come out only when the ignition is off.

Contact your dealer if service is required.

Park Brake and P (Park) Mechanism Check

⚠ Warning

When you are doing this check, the vehicle could begin to move. You or others could be injured and property could be damaged. Make sure there is room in front of the vehicle in case it begins to roll. Be ready to apply the regular brake at once should the vehicle begin to move.

Park on a fairly steep hill, with the vehicle facing downhill. Keeping your foot on the regular brake, set the parking brake.

- To check the parking brake's holding ability: With the engine running and the transmission in N (Neutral), slowly remove foot pressure from the regular brake pedal. Do this until the vehicle is held by the parking brake only.
- To check the P (Park) mechanism's holding ability: With the engine running, shift to P (Park). Then release the parking brake followed by the regular brake.

Contact your dealer if service is required.

Wiper Blade Replacement

Windshield wiper blades should be inspected for wear and cracking. See *Maintenance Schedule* ⇨ *303*.

Replacement blades come in different types and are removed in different ways. For proper type and length, see *Maintenance Replacement Parts* ⇨ *312*.

Caution

Allowing the wiper arm to touch the windshield when no wiper blade is installed could damage the windshield. Any damage that occurs would not be covered by the vehicle warranty. Do not allow the wiper arm to touch the windshield.

1. Lift the wiper arm away from the windshield.

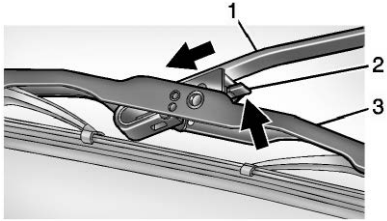

2. Push the release lever (2) to disengage the hook and push the wiper arm (1) out of the blade assembly (3).
3. Push the new blade assembly securely on the wiper arm until the release lever clicks into place.

Gas Strut(s)

This vehicle is equipped with gas strut(s) to provide assistance in lifting and holding open the hood/trunk/liftgate system in full open position.

⚠ Warning

If the gas struts that hold open the hood, trunk, and/or liftgate fail, you or others could be seriously injured. Take the vehicle to your dealer for service immediately. Visually inspect the gas struts for signs of wear, cracks, or other damage periodically. Check to make sure the hood/trunk/liftgate is held open with enough force. If struts are failing to hold the hood/trunk/liftgate, do not operate. Have the vehicle serviced.

Caution

Do not apply tape or hang any objects from gas struts. Also do not push down or pull on gas struts. This may cause damage to the vehicle.

See *Maintenance Schedule* ⇨ *303*.

Hood

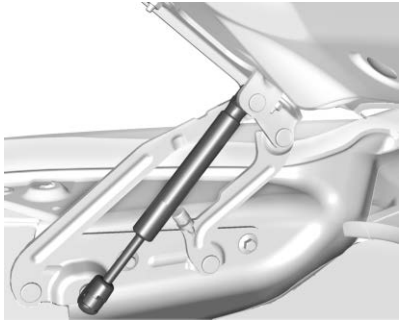

Trunk

Liftgate

Headlamp Aiming

Headlamp aim has been preset and should need no further adjustment.

If the vehicle is damaged in a crash, the headlamp aim may be affected. If adjustment to the headlamps is necessary, see your dealer.

Bulb Replacement

For the proper type of replacement bulbs, or any bulb changing procedure not listed in this section, contact your dealer.

Halogen Bulbs

⚠ Warning

Halogen bulbs have pressurized gas inside and can burst if you drop or scratch the bulb. You or others could be injured. Be sure to read and follow the instructions on the bulb package.

Front Turn Signal, Sidemarker, and Parking Lamps

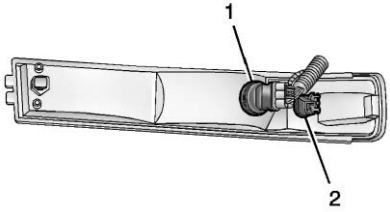

1. Front Parking and Turn Signal Lamp
2. Front Sidemarker Lamp

To replace the front turn signal, sidemarker, and/or parking lamp bulb(s):

1. Use a small tool to unlatch the outboard clip on the lamp by pushing inboard and prying the lamp assembly forward.
2. Remove the lamp from the grille.
3. Turn the bulb socket counterclockwise one-quarter turn and remove it from the lamp assembly.
4. Remove the bulb from the socket by pulling it straight out.
5. Replace the bulb.
6. Turn the bulb socket clockwise to reinstall it in the lamp assembly.
7. Reinstall the lamp assembly into the grille until the outboard clip snaps into place.

Taillamps

To replace a taillamp/turn signal lamp or back-up lamp bulb:

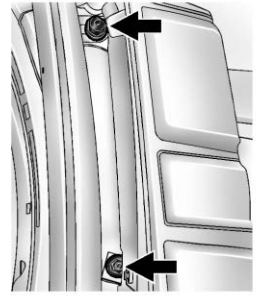

1. Remove the two inboard nuts from the inside of the taillamp assembly.

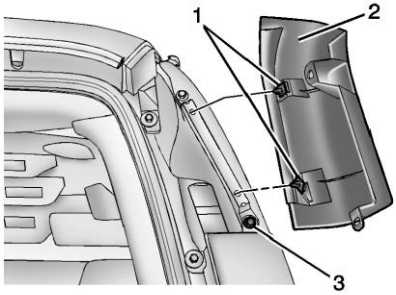

2. The third nut (3) is under the applique piece (2) above the lamp. Remove the two inboard applique nuts. Pull the applique (2) straight rearward slightly to clear the studs. Then rotate the applique (2) just far enough to gain access to the outer push pins (1).
3. Carefully disconnect the push pins (1) from the applique bracket.
4. Remove the third nut (3) from the upper outboard side of the lamp.
5. Remove the taillamp assembly from the vehicle.

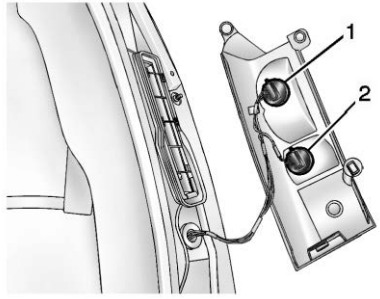

6. Remove the taillamp/turn signal lamp (1) or back-up lamp (2) bulb socket by turning it counterclockwise one-quarter turn and pulling it out of the lamp assembly.
7. Remove the bulb by pulling it straight out.
8. Push the new bulb into the socket.
9. Reinstall the bulb socket by turning it clockwise into the lamp assembly.
10. Reverse Steps 1–5 to reinstall the taillamp assembly and applique.

Center High-Mounted Stoplamp (CHMSL)

The Center High-Mounted Stoplamp (CHMSL) is above the rear doors at the center of the vehicle.

To replace a bulb:

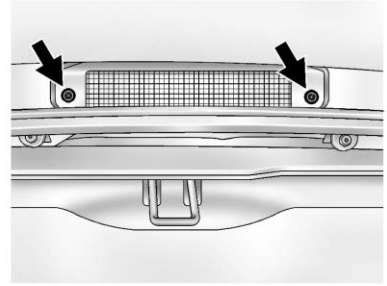

1. Remove the two screws from the CHMSL assembly.
2. Remove the CHMSL assembly.

3. Turn the bulb socket counterclockwise one-quarter turn to remove it from the lamp assembly.
4. Pull the old bulb straight out of the socket and push the new bulb into the socket.
5. Turn the bulb socket clockwise one-quarter turn to install it in the lamp assembly.
6. Reinstall the CHMSL assembly and two screws.

Do not block or damage the CHMSL when items are loaded on the roof of the vehicle.

License Plate Lamp

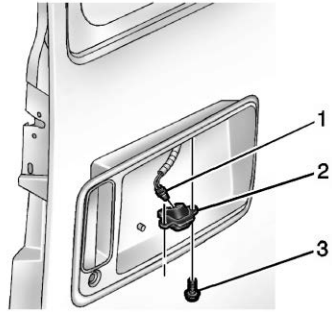

1. Bulb Socket
2. License Plate Bulb Assembly
3. Screws

To replace one of these bulbs:

1. Remove the screws (3) that secure the license plate bulb assembly (2).
2. Turn the bulb socket (1) counterclockwise and pull the bulb straight out of the socket.
3. Install the new bulb.
4. Reverse Steps 1 and 2 to reinstall the license plate bulb assembly.

Electrical System

Electrical System Overload

The vehicle has fuses and circuit breakers to protect against an electrical system overload.

When the current electrical load is too heavy, the circuit breaker opens and closes, protecting the circuit until the current load returns to normal or the problem is fixed. This greatly reduces the chance of circuit overload and fire caused by electrical problems.

Fuses and circuit breakers protect power devices in the vehicle.

Replace a bad fuse with a new one of the identical size and rating.

If there is a problem on the road and a fuse needs to be replaced, the same amperage fuse can be borrowed. Choose some feature of the vehicle that is not needed to use and replace it as soon as possible.

Headlamp Wiring

An electrical overload may cause the lamps to go on and off, or in some cases to remain off. Have the headlamp wiring checked right away if the lamps go on and off or remain off.

Windshield Wipers

If the wiper motor overheats due to heavy snow or ice, the windshield wipers will stop until the motor cools and will then restart.

Although the circuit is protected from electrical overload, overload due to heavy snow or ice may cause wiper linkage damage. Always clear ice and heavy snow from the windshield before using the windshield wipers.

If the overload is caused by an electrical problem and not snow or ice, be sure to get it fixed.

Fuses and Circuit Breakers

The wiring circuits in the vehicle are protected from short circuits by a combination of fuses and circuit breakers. This greatly reduces the chance of fires caused by electrical problems.

Look at the silver-colored band inside the fuse. If the band is broken or melted, replace the fuse. Be sure you replace a bad fuse with a new one of the identical size and rating.

Engine Compartment Fuse Block

The fuse block is located in the engine compartment on the driver side of the vehicle.

Vehicles with upfitter content

See www.gmupfitter.com for upfitter provisions and best practices.

Caution

Spilling liquid on any electrical component on the vehicle may damage it. Always keep the covers on any electrical component.

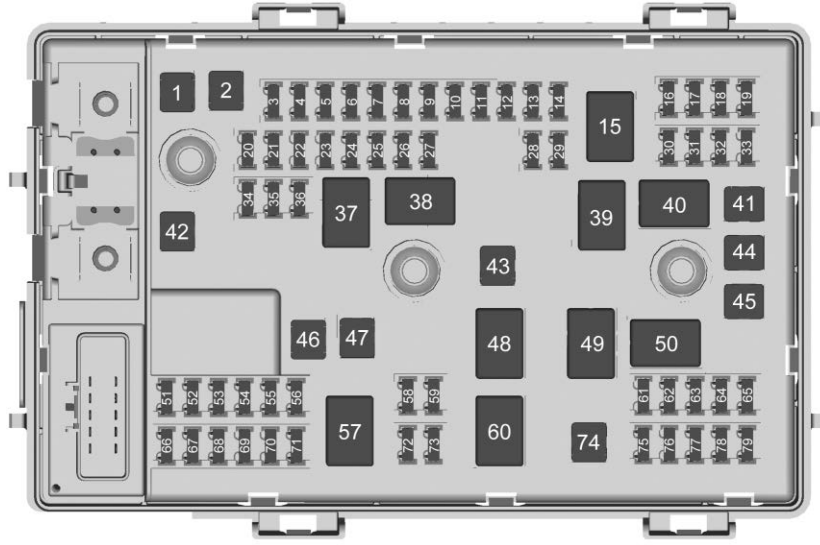

The vehicle may not be equipped with all of the fuses, relays, and features shown.

Fuses	Usage
1	ABS motor
2	ABS module

Fuses	Usage
3	Right trailer stoplamp/Turnlamp
4	–
5	–
6	Fuel system control module/Ignition
7	Body control module 5
8	Body control module 7
9	Body control module 4
10	Instrument cluster
11	Trailer wiring
12	–
13	Interior rear vision camera module
14	Windshield washer
16	Horn
17	Transmission
18	A/C
19	Engine control module battery
20	Cutaway/Left stoplamp/Turnlamp
21	Left trailer stoplamp/Turnlamp
22	Cutaway/Right stoplamp/Turnlamp
23	–
24	Fuel pump
25	Auxiliary power outlet
26	Body control module 3
27	Special equipment option
28	Airbag
29	Steering wheel sensor
30	Engine control module Ignition
31	Transmission control module Ignition
32	Transmission control module 1 battery/Engine control module battery power (gas 6 cyl)
33	Rear parking aid module
34	–
35	–
36	Fuel system control module battery
41	Transmission control 2 module battery power
42	Trailer wiring
43	–
44	Starter solenoid
45	Engine control module/Powertrain

Fuses	Usage
46	AC DC inverter
47	Cooling fan – low
51	Left high-beam headlamp
52	Right high-beam headlamp
53	Left low-beam headlamp
54	Right low-beam headlamp
55	Wipers
56	Canister vent solenoid
58	Body control module 2
59	Body control module 1
61	Engine oil solenoid
62	O2 sensor 2
63	–
64	Mass air flow/ Canister vent

Fuses	Usage
65	Ignition/Injectors – odd
66	Daytime running lamps 2
67	Daytime running lamps 1
68	Auxiliary stoplamps
69	External power for trailer
70	Upfitter stoplamps
71	Fuel heater/Flex fuel sensor
72	Body control module 6
73	Lighter/Data link connector
74	Front blower
75	V6 fuel injectors
76	–
77	O2 sensor 1
78	Engine control module/Powertrain

Fuses	Usage
79	Ignition/Injectors – even

Relays	Usage
15	Run/Crank
37	–
38	Fuel pump
39	Crank
40	A/C compressor
48	–
49	Powertrain
50	–
57	Cooling fan – low
60	Cooling fan control

Auxiliary Fuse Block

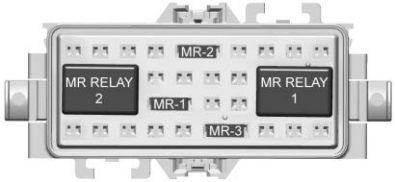

This component is near the fuse block in the engine compartment

Fuses	Usage
MR-1	Upfitter 1
MR-2	Upfitter 2
MR-3	Upfitter power control

Relays	Usage
MR Rel 1	Upfitter 1
MR Rel 2	Upfitter 2

Mega Fuse Holder

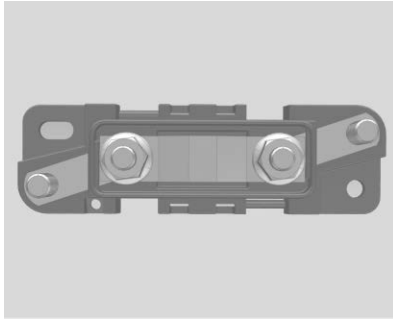

Fuse	Usage
1	Starter motor

Floor Console Fuse Block

The floor console fuse block is under the driver seat.

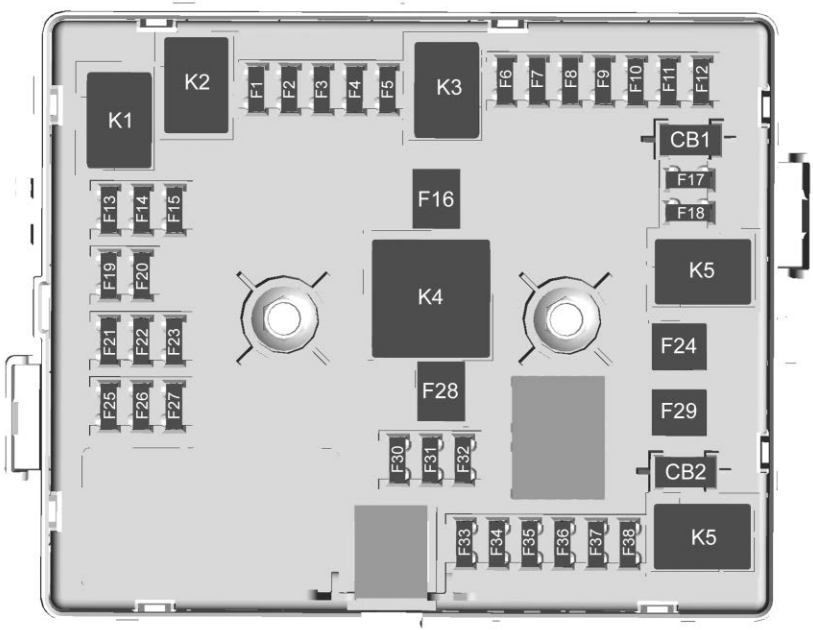

The vehicle may not be equipped with all of the fuses, relays, and features shown.

Mini-Fuse	Usage
F1	–
F2	Steering wheel sensor
F3	Auxiliary parking lamps
F4	Front parking lamps
F5	Trailer parking lamps
F6	Upfitter/Parking lamps
F7	Right rear parking lamp
F8	Left rear parking lamp
F9	Exterior rear mirror switch/ Door lock-unlock control upfitter
F10	Airbag/Automatic occupant sensing

Mini-Fuse	Usage
F11	– / OnStar
F12	ECM batt
F13	HVAC 2
F14	HVAC 1
F15	–
F16	Upfitter 1
F17	Exterior rearview heated mirrors
F18	Rear window defogger
F19	Compass
F20	Radio/Chime/ SiriusXM satellite radio
F21	Remote function actuator/Tire pressure monitor
F22	Ignition switch/ Discrete logic ignition sensor
F23	Instrument cluster
F24	–

Mini-Fuse	Usage
F25	HVAC control
F26	Auxiliary/Trailer reverse lamps
F27	Reverse lamps
F28	Upfitter 2/Reading lamps
F29	Rear blower
F30	Upfitter/Courtesy lamps
F31	Front door lock
F32	Rear door lock
F33	Cargo door unlock
F34	Passenger door unlock
F35	Rear passenger door unlock
F36	Driver door lock
F37	Empty
F38	–

Relays	Usage
K1	Run
K2	–
K3	Parking lamps
K4	Upfitter 2
K5	Rear defogger
K6	Retained accessory power

Circuit Breaker	Usage
CB1	Power seats
CB2	Power windows

Wheels and Tires

Tires

Every new GM vehicle has high-quality tires made by a leading tire manufacturer. See the warranty manual for information regarding the tire warranty and where to get service. For additional information refer to the tire manufacturer.

⚠ Warning

- Poorly maintained and improperly used tires are dangerous.
- Overloading the tires can cause overheating as a result of too much flexing. There could be a blowout and a serious crash. See *Vehicle Load Limits* ⇨ *169*.

(Continued)

Warning (Continued)

- Underinflated tires pose the same danger as overloaded tires. The resulting crash could cause serious injury. Check all tires frequently to maintain the recommended pressure. Tire pressure should be checked when the tires are cold.
- Overinflated tires are more likely to be cut, punctured, or broken by a sudden impact — such as when hitting a pothole. Keep tires at the recommended pressure.
- Worn or old tires can cause a crash. If the tread is badly worn, replace them.

(Continued)

Warning (Continued)

- Replace any tires that have been damaged by impacts with potholes, curbs, etc.
- Improperly repaired tires can cause a crash. Only the dealer or an authorized tire service center should repair, replace, dismount, and mount the tires.
- Do not spin the tires in excess of 56 km/h (35 mph) on slippery surfaces such as snow, mud, ice, etc. Excessive spinning may cause the tires to explode.

All-Season Tires

This vehicle may come with all-season tires. These tires are designed to provide good overall performance on most road surfaces and weather conditions. Original equipment tires designed to GM's specific tire performance criteria have a TPC specification code molded onto the sidewall. Original equipment all-season tires can be identified by the last two characters of this TPC code, which will be “MS.”

Consider installing winter tires on the vehicle if frequent driving on snow or ice-covered roads is expected. All-season tires provide adequate performance for most winter driving conditions, but they may not offer the same level of traction or performance as winter tires on snow or ice-covered roads. See *Winter Tires* ⇨ *256*.

Winter Tires

This vehicle was not originally equipped with winter tires. Winter tires are designed for increased traction on snow and ice-covered roads. Consider installing winter tires on the vehicle if frequent driving on ice or snow covered roads is expected. See your dealer for details regarding winter tire availability and proper tire selection. Also, see *Buying New Tires* ⇨ *271*.

With winter tires, there may be decreased dry road traction, increased road noise, and shorter tread life. After changing to winter tires, be alert for changes in vehicle handling and braking.

If using winter tires:

- Use tires of the same brand and tread type on all four wheel positions.
- Use only radial ply tires of the same size, load range, and speed rating as the original equipment tires.

Winter tires with the same speed rating as the original equipment tires may not be available for H, V, W, Y, and ZR speed rated tires. If winter tires with a lower speed rating are chosen, never exceed the tire's maximum speed capability.

All-Terrain Tires

This vehicle may have All-Terrain Tires. These tires provide good performance on most road surfaces, weather conditions, and for off-road driving.

The tread pattern on these tires may wear more quickly than other tires. Consider rotating the tires more frequently than at 12 000 km (7,500 mi) intervals if irregular wear is noted when the tires are inspected. See *Tire Inspection* ⇨ *268*.

Tire Sidewall Labeling

Useful information about a tire is molded into the sidewall. The examples show a typical passenger vehicle and light truck tire sidewall.

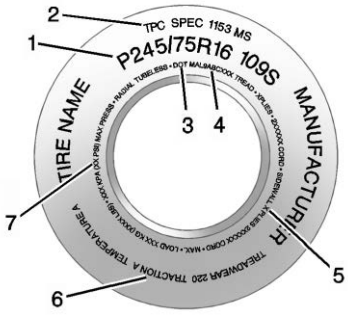

Passenger (P-Metric) Tire

(1) Tire Size : The tire size code is a combination of letters and numbers used to define a particular tire's width, height, aspect ratio, construction type, and service description. See the “Tire Size” illustration later in this section for more detail.

(2) TPC Spec (Tire Performance Criteria Specification) : Original equipment tires designed to GM's specific tire performance criteria have a TPC specification code molded onto the sidewall. GM's TPC specifications meet or exceed all federal safety guidelines.

(3) DOT (Department of Transportation) : The Department of Transportation (DOT) code indicates that the tire is in compliance with the U.S. Department of Transportation Motor Vehicle Safety Standards.

DOT Tire Date of Manufacture : The last four digits of the TIN indicate the tire manufactured date. The first two digits represent the week (01-52) and the last two digits, the year. For example, the third week of the year 2010 would have a four-digit DOT date of 0310.

(4) Tire Identification Number (TIN) : The letters and numbers following the DOT code are the Tire Identification Number (TIN). The TIN shows the manufacturer and plant code, tire size, and date the tire was manufactured. The TIN is molded onto both sides of the tire, although only one side may have the date of manufacture.

(5) Tire Ply Material : The type of cord and number of plies in the sidewall and under the tread.

(6) Uniform Tire Quality Grading (UTQG) : Tire manufacturers are required to grade tires based on three performance factors: treadwear, traction, and temperature resistance. For more information, see *Uniform Tire Quality Grading* ⇨ *273*.

(7) Maximum Cold Inflation Load Limit : Maximum load that can be carried and the maximum pressure needed to support that load. For information on recommended tire pressure see *Tire Pressure* ⇨ *263* and *Vehicle Load Limits* ⇨ *169*.

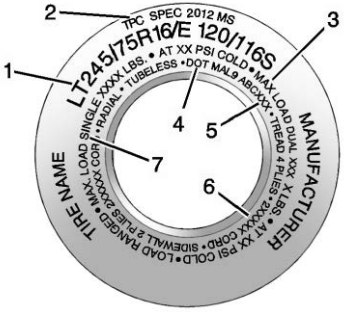

Light Truck (LT-Metric) Tire

(1) Tire Size : The tire size code is a combination of letters and numbers used to define a particular tire's width, height, aspect ratio, construction type, and service description. See the "Tire Size" illustration later in this section for more detail.

(2) TPC Spec (Tire Performance Criteria Specification) : Original equipment tires designed to GM's specific tire performance criteria have a TPC specification code molded onto the sidewall. GM's TPC specifications meet or exceed all federal safety guidelines. This does not apply to Goodyear LT225/75R16 G949 RSA and Goodyear LT225/75R16 G933 RSD commercial truck tires.

(3) Dual Tire Maximum Load : Maximum load that can be carried and the maximum pressure needed to support that load when used in a dual configuration. For information on recommended tire pressure see *Tire Pressure* ⇨ *263* and *Vehicle Load Limits* ⇨ *169*.

(4) DOT (Department of Transportation) : The Department of Transportation (DOT) code indicates that the tire is in compliance with the U.S. Department of Transportation Motor Vehicle Safety Standards.

DOT Tire Date of Manufacture : The last four digits of the TIN indicate the tire manufactured date. The first two digits represent the week (01-52) and the last two digits, the year. For example, the third week of the year 2010 would have a four-digit DOT date of 0310.

(5) Tire Identification Number (TIN) : The letters and numbers following the DOT code are the Tire Identification Number (TIN). The TIN shows the manufacturer and plant code, tire size, and date the tire was manufactured. The TIN is

molded onto both sides of the tire, although only one side may have the date of manufacture.

(6) Tire Ply Material : The type of cord and number of plies in the sidewall and under the tread.

(7) Single Tire Maximum Load : Maximum load that can be carried and the maximum pressure needed to support that load when used as a single. For information on recommended tire pressure see *Tire Pressure* ⇨ *263* and *Vehicle Load Limits* ⇨ *169*.

Tire Designations

Tire Size

The following examples show the different parts of a tire size.

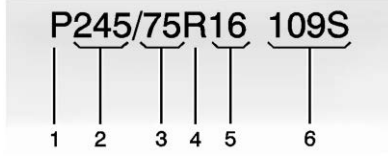

Passenger (P-Metric) Tire

(1) Passenger (P-Metric) Tire : The United States version of a metric tire sizing system. The letter P as the first character in the tire size means a passenger vehicle tire engineered to standards set by the U.S. Tire and Rim Association.

(2) Tire Width : The three-digit number indicates the tire section width in millimeters from sidewall to sidewall.

(3) Aspect Ratio : A two-digit number that indicates the tire height-to-width measurements. For example, if the tire size aspect ratio is 75, as shown in item 3 of the illustration, it would mean that the tire's sidewall is 75 percent as high as it is wide.

(4) Construction Code : A letter code is used to indicate the type of ply construction in the tire. The letter R means radial ply construction; the letter D means diagonal or bias ply construction; and the letter B means belted-bias ply construction.

(5) Rim Diameter : Diameter of the wheel in inches.

(6) Service Description : These characters represent the load index and speed rating of the tire. The load index represents the load carrying capacity a tire is certified to carry. The speed rating is the maximum speed a tire is certified to carry a load.

Light Truck (LT-Metric) Tire

(1) Light Truck (LT-Metric) Tire : The United States version of a metric tire sizing system. The letters LT as the first two characters in the tire size mean a light truck tire engineered to standards set by the U.S. Tire and Rim Association.

(2) Tire Width : The three-digit number indicates the tire section width in millimeters from sidewall to sidewall.

(3) Aspect Ratio : A two-digit number that indicates the tire height-to-width measurements. For example, if the tire size aspect ratio is 75, as shown in item 3 of the light truck (LT-Metric) tire illustration, it would mean that the tire's sidewall is 75 percent as high as it is wide.

(4) Construction Code : A letter code is used to indicate the type of ply construction in the tire. The letter R means radial ply construction; the letter D means diagonal or bias ply construction; and the letter B means belted-bias ply construction.

(5) Rim Diameter : Diameter of the wheel in inches.

(6) Load Range : Load Range.

(7) Service Description : The service description indicates the load index and speed rating of a tire. If two numbers are given as in the example, 120/116, then this represents the load index for single versus dual wheel usage (single/dual). The speed rating is the maximum speed a tire is certified to carry a load. This does not apply to Goodyear LT225/75R16 G949 RSA and Goodyear LT225/75R16 G933 RSD commercial truck tires; see the dual tire and single tire maximum load and load range letter designations on the tire sidewall.

Tire Terminology and Definitions

Air Pressure : The amount of air inside the tire pressing outward on each square inch of the tire. Air pressure is expressed in kPa (kilopascal) or psi (pounds per square inch).

Accessory Weight : The combined weight of optional accessories. Some examples of optional accessories are automatic transmission, power windows, power seats, and air conditioning.

Aspect Ratio : The relationship of a tire's height to its width.

Belt : A rubber coated layer of cords between the plies and the tread. Cords may be made from steel or other reinforcing materials.

Bead : The tire bead contains steel wires wrapped by steel cords that hold the tire onto the rim.

Bias Ply Tire : A pneumatic tire in which the plies are laid at alternate angles less than 90 degrees to the centerline of the tread.

Cold Tire Pressure : The amount of air pressure in a tire, measured in kPa (kilopascal) or psi (pounds per square inch) before a tire has built up heat from driving. See *Tire Pressure* ⇨ *263*.

Curb Weight : The weight of a motor vehicle with standard and optional equipment including the maximum capacity of fuel, oil, and coolant, but without passengers and cargo.

DOT Markings : A code molded into the sidewall of a tire signifying that the tire is in compliance with the U.S. Department of Transportation (DOT) Motor Vehicle Safety Standards. The DOT code includes the Tire Identification Number (TIN), an alphanumeric designator which can also identify the tire manufacturer, production plant, brand, and date of production.

GVWR : Gross Vehicle Weight Rating. See *Vehicle Load Limits* ⇨ *169*.

GAWR FRT : Gross Axle Weight Rating for the front axle. See *Vehicle Load Limits* ⇨ *169*.

GAWR RR : Gross Axle Weight Rating for the rear axle. See *Vehicle Load Limits* ⇨ *169*.

Intended Outboard Sidewall : The side of an asymmetrical tire that must always face outward when mounted on a vehicle.

Kilopascal (kPa) : The metric unit for air pressure.

Light Truck (LT-Metric) Tire : A tire used on light duty trucks and some multipurpose passenger vehicles.

Load Index : An assigned number ranging from 1 to 279 that corresponds to the load carrying capacity of a tire.

Maximum Inflation Pressure : The maximum air pressure to which a cold tire can be inflated. The maximum air pressure is molded onto the sidewall.

Maximum Load Rating : The load rating for a tire at the maximum permissible inflation pressure for that tire.

Maximum Loaded Vehicle Weight : The sum of curb weight, accessory weight, vehicle capacity weight, and production options weight.

Normal Occupant Weight : The number of occupants a vehicle is designed to seat multiplied by 68 kg (150 lb). See *Vehicle Load Limits* ⇨ *169*.

Occupant Distribution : Designated seating positions.

Outward Facing Sidewall : The side of an asymmetrical tire that has a particular side that faces outward when mounted on a vehicle. The side of the tire that contains a whitewall, bears white lettering, or bears manufacturer, brand, and/or model name molding that is higher or deeper than the same moldings on the other sidewall of the tire.

Passenger (P-Metric) Tire : A tire used on passenger cars and some light duty trucks and multipurpose vehicles.

Recommended Inflation Pressure : Vehicle manufacturer's recommended tire inflation pressure as shown on the tire placard.
See *Tire Pressure* ⇨ *263* and *Vehicle Load Limits* ⇨ *169*.

Radial Ply Tire : A pneumatic tire in which the ply cords that extend to the beads are laid at 90 degrees to the centerline of the tread.

Rim : A metal support for a tire and upon which the tire beads are seated.

Sidewall : The portion of a tire between the tread and the bead.

Speed Rating : An alphanumeric code assigned to a tire indicating the maximum speed at which a tire can operate.

Traction : The friction between the tire and the road surface. The amount of grip provided.

Tread : The portion of a tire that comes into contact with the road.

Treadwear Indicators : Narrow bands, sometimes called wear bars, that show across the tread of a tire when only 1.6 mm (1/16 in) of tread remains. See *When It Is Time for New Tires* ⇨ *270*.

UTQGS (Uniform Tire Quality Grading Standards) : A tire information system that provides consumers with ratings for a tire's traction, temperature, and treadwear. Ratings are determined by tire manufacturers using

government testing procedures. The ratings are molded into the sidewall of the tire. See *Uniform Tire Quality Grading* ⇨ *273*.

Vehicle Capacity Weight : The number of designated seating positions multiplied by 68 kg (150 lb) plus the rated cargo load. See *Vehicle Load Limits* ⇨ *169*.

Vehicle Maximum Load on the Tire : Load on an individual tire due to curb weight, accessory weight, occupant weight, and cargo weight.

Vehicle Placard : A label permanently attached to a vehicle showing the vehicle capacity weight and the original equipment tire size and recommended inflation pressure. See “Tire and Loading Information Label” under *Vehicle Load Limits* ⇨ *169*.

Tire Pressure

Tires need the correct amount of air pressure to operate effectively.

Caution

Neither tire underinflation nor overinflation is good. Underinflated tires, or tires that do not have enough air, can result in:

- Tire overloading and overheating which could lead to a blowout.
- Premature or irregular wear.
- Poor handling.
- Reduced fuel economy.

Overinflated tires, or tires that have too much air, can result in:

- Unusual wear.

(Continued)

Caution (Continued)

- Poor handling.
- Rough ride.
- Needless damage from road hazards.

The Tire and Loading Information label on the vehicle indicates the original equipment tires and the correct cold tire inflation pressures. The recommended pressure is the minimum air pressure needed to support the vehicle's maximum load carrying capacity.

For additional information regarding how much weight the vehicle can carry, and an example of the Tire and Loading Information label, see *Vehicle Load Limits* ⇨ *169*. How the vehicle is loaded affects vehicle handling and ride comfort. Never

load the vehicle with more weight than it was designed to carry.

When to Check

Check the tires once a month or more.

Do not forget the spare tire, if the vehicle has one. See *Full-Size Spare Tire* ⇨ *285* for additional information.

How to Check

Use a good quality pocket-type gauge to check tire pressure. Proper tire inflation cannot be determined by looking at the tire. Check the tire inflation pressure when the tires are cold, meaning the vehicle has not been driven for at least three hours or no more than 1.6 km (1 mi).

Remove the valve cap from the tire valve stem. Press the tire gauge firmly onto the valve to get a pressure measurement. If the cold tire inflation pressure matches the recommended pressure on the Tire and Loading Information label, no further adjustment is necessary. If the inflation pressure is low, add air until the recommended pressure is reached. If the inflation pressure is high, press on the metal stem in the center of the tire valve to release air.

Re-check the tire pressure with the tire gauge.

Put the valve caps back on the valve stems to keep out dirt and moisture and prevent leaks. Use only valve caps designed for the vehicle by GM. TPMS sensors could be damaged and would not be covered by the vehicle warranty.

Tire Pressure Monitor System

The Tire Pressure Monitor System (TPMS) uses radio and sensor technology to check tire pressure levels. The TPMS sensors monitor the air pressure in your tires and transmit tire pressure readings to a receiver located in the vehicle.

Each tire, including the spare (if provided), should be checked monthly when cold and inflated to the inflation pressure recommended by the vehicle manufacturer on the vehicle placard or tire inflation pressure label. (If your vehicle has tires of a different size than the size indicated on the vehicle placard or tire inflation pressure label, you should determine the proper tire inflation pressure for those tires.)

As an added safety feature, your vehicle has been equipped with a tire pressure monitoring system (TPMS) that illuminates a low tire pressure telltale when one or more of your tires is significantly under-inflated.

Accordingly, when the low tire pressure telltale illuminates, you should stop and check your tires as soon as possible, and inflate them to the proper pressure. Driving on a significantly under-inflated tire

causes the tire to overheat and can lead to tire failure. Under-inflation also reduces fuel efficiency and tire tread life, and may affect the vehicle's handling and stopping ability.

Please note that the TPMS is not a substitute for proper tire maintenance, and it is the driver's responsibility to maintain correct tire pressure, even if under-inflation has not reached the level to trigger illumination of the TPMS low tire pressure telltale.

Your vehicle has also been equipped with a TPMS malfunction indicator to indicate when the system is not operating properly. The TPMS malfunction indicator is combined with the low tire pressure telltale. When the system detects a malfunction, the telltale will flash for approximately one minute and then remain continuously illuminated. This sequence will continue upon subsequent vehicle start-ups as long as the malfunction exists.

When the malfunction indicator is illuminated, the system may not be able to detect or signal low tire pressure as intended. TPMS malfunctions may occur for a variety of reasons, including the installation of replacement or alternate tires or wheels on the vehicle that prevent the TPMS from functioning properly. Always check the TPMS malfunction telltale after replacing one or more tires or wheels on your vehicle to ensure that the replacement or alternate tires and wheels allow the TPMS to continue to function properly.

See *Tire Pressure Monitor Operation* ⇨ *265*.

See *Radio Frequency Statement* ⇨ *328*.

Tire Pressure Monitor Operation

This vehicle may have a Tire Pressure Monitor System (TPMS). The TPMS is designed to warn the driver when a low tire pressure condition exists. TPMS sensors are mounted onto each tire and wheel assembly, excluding the spare tire and wheel assembly. The TPMS sensors monitor the air pressure in the tires and transmit the tire pressure readings to a receiver located in the vehicle.

When a low tire pressure condition is detected, the TPMS illuminates the low tire pressure warning light located on the instrument cluster. If the warning light comes on, stop as soon as possible and inflate the tires to the recommended pressure shown on the Tire and Loading Information label. See *Vehicle Load Limits* ⇨ *169*.

A message to check the pressure in a specific tire displays in the Driver Information Center (DIC). The low tire pressure warning light and the DIC warning message come on at

each ignition cycle until the tires are inflated to the correct inflation pressure. If the vehicle has DIC buttons, tire pressure levels can be viewed. For additional information and details about the DIC operation and displays, see *Driver Information Center (DIC)* ⇨ *111*.

The low tire pressure warning light may come on in cool weather when the vehicle is first started, and then turn off as the vehicle is driven. This could be an early indicator that the air pressure is getting low and needs to be inflated to the proper pressure.

A Tire and Loading Information label shows the size of the original equipment tires and the correct inflation pressure for the tires when they are cold. See *Vehicle Load Limits* ⇨ *169*, for an example of the Tire and Loading Information label and its location. Also see *Tire Pressure* ⇨ *263*.

The TPMS can warn about a low tire pressure condition but it does not replace normal tire maintenance. See *Tire Inspection* ⇨ *268*, *Tire Rotation* ⇨ *268* and *Tires* ⇨ *255*.

Caution

Tire sealant materials are not all the same. A non-approved tire sealant could damage the TPMS sensors. TPMS sensor damage caused by using an incorrect tire sealant is not covered by the vehicle warranty. Always use only the GM approved tire sealant available through your dealer or included in the vehicle.

TPMS Malfunction Light and Message

The TPMS will not function properly if one or more of the TPMS sensors are missing or inoperable. When the system detects a malfunction, the low tire pressure warning light flashes for about one minute and then stays on for the remainder of the ignition cycle. A DIC warning message also displays. The malfunction light and DIC warning message come on at each ignition cycle until the problem is corrected. Some of the conditions that can cause these to come on are:

- One of the road tires has been replaced with the spare tire. The spare tire does not have a TPMS sensor. The malfunction light and the DIC message should go off after the road tire is replaced and the sensor matching process is performed successfully. See "TPMS Sensor Matching Process" later in this section.
- The TPMS sensor matching process was not done or not completed successfully after rotating the tires. The malfunction light and the DIC message should go off after successfully completing the sensor matching process. See "TPMS Sensor Matching Process" later in this section.
- One or more TPMS sensors are missing or damaged. The malfunction light and the DIC

message should go off when the TPMS sensors are installed and the sensor matching process is performed successfully. See your dealer for service.

- Replacement tires or wheels do not match the original equipment tires or wheels. Tires and wheels other than those recommended could prevent the TPMS from functioning properly. See *Buying New Tires* ⇨ *271*.
- Operating electronic devices or being near facilities using radio wave frequencies similar to the TPMS could cause the TPMS sensors to malfunction.

If the TPMS is not functioning properly, it cannot detect or signal a low tire pressure condition. See your dealer for service if the TPMS malfunction light and DIC message come on and stay on.

TPMS Sensor Matching Process

Each TPMS sensor has a unique identification code. The identification code needs to be matched to a new tire/wheel position after rotating the vehicle's tires or replacing one or more of the TPMS sensors. Also, the TPMS sensor matching process should be performed after replacing a spare tire with a road tire containing the TPMS sensor. The malfunction light and the DIC message should go off at the next ignition cycle. The sensors are matched to the tire/wheel positions, using a TPMS relearn tool, in the following order: driver side front tire, passenger side front tire, passenger side rear tire, and driver side rear. See your dealer for service or to purchase a relearn tool. A TPMS relearn tool can also be purchased. See Tire Pressure Monitor Sensor Activation Tool at www.gmtoolsandequipment.com or call 1-800-GM TOOLS (1-800-468-6657).

There are two minutes to match the first tire/wheel position, and five minutes overall to match all four tire/wheel positions. If it takes longer, the matching process stops and must be restarted.

The TPMS sensor matching process is:

1. Set the parking brake.
2. Turn the ignition on without starting the vehicle. See *Ignition Positions* ⇨ *174*.
3. Press the Remote Keyless Entry (RKE) transmitter's 🔒 and 🔓 buttons at the same time for approximately five seconds. The horn sounds twice to signal the receiver is in relearn mode and TIRE LEARNING ACTIVE message displays on the DIC screen.

   If the vehicle does not have RKE, press the Driver Information Center (DIC) vehicle information button until the PRESS ✓ TO RELEARN TIRE POSITIONS message displays. The horn sounds twice to signal the receiver is in relearn mode and TIRE LEARNING ACTIVE message displays on the DIC screen.

4. Start with the driver side front tire.
5. Place the relearn tool against the tire sidewall, near the valve stem. Then press the button to activate the TPMS sensor. A horn chirp confirms that the sensor identification code has been matched to this tire and wheel position.
6. Proceed to the passenger side front tire, and repeat the procedure in Step 5.
7. Proceed to the passenger side rear tire, and repeat the procedure in Step 5.
8. Proceed to the driver side rear tire, and repeat the procedure in Step 5. The horn sounds two times to indicate the sensor identification code has been matched to the driver side rear tire, and the TPMS sensor matching process is no longer active. The TIRE LEARNING ACTIVE message on the DIC display screen goes off.
9. Turn the vehicle off.
10. Set all four tires to the recommended air pressure level as indicated on the Tire and Loading Information label.

Tire Inspection

We recommend that the tires, including the spare tire, if the vehicle has one, be inspected for signs of wear or damage at least once a month.

Replace the tire if:

- The indicators at three or more places around the tire can be seen.
- There is cord or fabric showing through the tire's rubber.
- The tread or sidewall is cracked, cut, or snagged deep enough to show cord or fabric.
- The tire has a bump, bulge, or split.
- The tire has a puncture, cut, or other damage that cannot be repaired well because of the size or location of the damage.

Tire Rotation

Tires should be rotated every 12 000 km (7,500 mi). See *Maintenance Schedule* ⇨ *303*.

Tires are rotated to achieve a uniform wear for all tires. The first rotation is the most important.

Any time unusual wear is noticed, rotate the tires as soon as possible and check the wheel alignment. Also check for damaged tires or wheels. See *When It Is Time for New Tires* ⇨ *270* and *Wheel Replacement* ⇨ *275*.

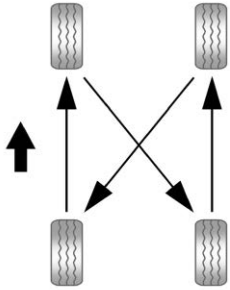

Use this rotation pattern when rotating the tires if the vehicle has single rear wheels.

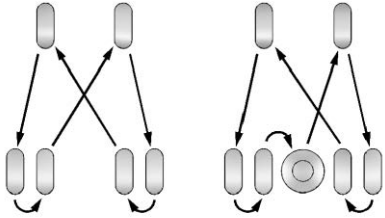

Use this rotation pattern when rotating the tires if the vehicle has dual rear wheels.

When installing dual wheels, check that the vent holes in the inner and outer wheels on each side are lined up.

Adjust the front and rear tires to the recommended inflation pressure on the Tire and Loading Information label after the tires have been rotated. See *Tire Pressure* ⇨ *263* and *Vehicle Load Limits* ⇨ *169*.

Reset the Tire Pressure Monitor System. See *Tire Pressure Monitor Operation* ⇨ *265*.

Check that all wheel nuts are properly tightened. See “Wheel Nut Torque” under *Capacities and Specifications* ⇨ *315*.

⚠ Warning

Rust or dirt on a wheel, or on the parts to which it is fastened, can make wheel nuts become loose after time. The wheel could come off and cause an accident. When changing a wheel, remove any rust or dirt from places where the wheel attaches to the vehicle. In an emergency, a cloth or a paper towel can be used; however, use a scraper or wire brush later to remove all rust or dirt.

Lightly coat the center of the wheel hub with wheel bearing grease after a wheel change or tire rotation to prevent corrosion or rust build-up. Do not get grease on the flat wheel mounting surface or on the wheel nuts or bolts.

Dual Tire Rotation

When the vehicle is new, or whenever a wheel, wheel bolt, or wheel nut is replaced or serviced, check the wheel nut torque after 160, 1 600, and 10 000 km (100, 1,000, and 6,000 mi) of driving. For proper torque and wheel nut tightening information, see "Removing the Flat Tire and Installing the Spare Tire" under *Tire Changing* ⇨ *278* and "Wheel Nut Torque" under *Capacities and Specifications* ⇨ *315*.

The outer tire on a dual wheel setup generally wears faster than the inner tire. Tires last longer and wear more evenly if they are rotated. See *Tire Inspection* ⇨ *268* and *Tire Rotation* ⇨ *268*. Also see *Maintenance Schedule* ⇨ *303*.

⚠ Warning

If the vehicle is operated with a tire that is underinflated, the tire can overheat. An overheated tire

(Continued)

Warning (Continued)

can lose air suddenly or catch fire. You or others could be injured. Properly inflate all tires, including the spare.

See *Tires* ⇨ *255* and *Tire Pressure* ⇨ *263* for more information on proper tire inflation.

When It Is Time for New Tires

Factors such as maintenance, temperatures, driving speeds, vehicle loading, and road conditions affect the wear rate of the tires.

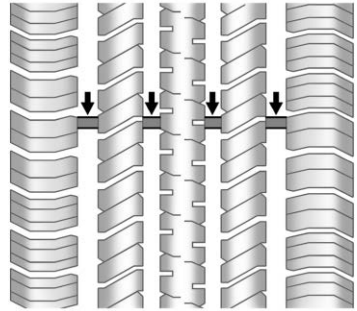

Treadwear indicators are one way to tell when it is time for new tires. Treadwear indicators appear when the tires have only 1.6 mm (1/16 in) or less of tread remaining.

Some commercial truck tires, including Goodyear LT225/75R16 G949 RSA and Goodyear LT225/75R16 G933 RSD, may not have treadwear indicators. If the tires do not have treadwear indicators, replace the tires when the tread depth is down to 3.2 mm (1/8 in) for the front tires, or 1.6 mm (1/16 in) for the rear tires.

See *Tire Inspection* ⇨ *268* and *Tire Rotation* ⇨ *268* for additional information.

The rubber in tires ages over time. This also applies to the spare tire, if the vehicle has one, even if it is never used. Multiple factors including temperatures, loading conditions, and inflation pressure maintenance affect how fast aging takes place. GM recommends that tires, including the spare if equipped, be replaced after six years, regardless of tread wear. The tire manufacture date is the last four digits of the DOT Tire Identification Number (TIN) which is molded into one side of the tire sidewall. The first two digits represent the week (01-52) and the last two digits, the year. For example, the third week of the year 2010 would have a four-digit DOT date of 0310.

Vehicle Storage

Tires age when stored normally mounted on a parked vehicle. Park a vehicle that will be stored for at least a month in a cool, dry, clean area away from direct sunlight to slow aging. This area should be free of grease, gasoline or other substances that can deteriorate rubber.

Parking for an extended period can cause flat spots on the tires that may result in vibrations while driving. When storing a vehicle for at least a month, remove the tires or raise the vehicle to reduce the weight from the tires.

Buying New Tires

GM has developed and matched specific tires for the vehicle. The original equipment tires installed were designed to meet General Motors Tire Performance Criteria Specification (TPC Spec) system rating. When replacement tires are needed, GM strongly recommends buying tires with the same TPC Spec rating.

GM's exclusive TPC Spec system considers over a dozen critical specifications that impact the overall performance of the vehicle, including brake system performance, ride and handling, traction control, and tire pressure monitoring performance. GM's TPC Spec number is molded onto the tire's sidewall near the tire size. If the tires have an all-season tread design, the TPC Spec number will be followed by MS for mud and snow. See *Tire Sidewall Labeling* ⇨ *257* for additional information.

GM recommends replacing worn tires in complete sets of four (six for dual rear wheels). Uniform tread depth on all tires will help to maintain the performance of the vehicle. Braking and handling performance may be adversely affected if all the tires are not replaced at the same time. If proper rotation and

maintenance have been done, all four tires (six for dual rear wheels) should wear out at about the same time. See *Tire Rotation* ⇨ *268* for information on proper tire rotation. However, if it is necessary to replace only one axle set of worn tires, place the new tires on the rear axle (two for single rear wheels, four for dual rear wheels).

⚠ Warning

Tires could explode during improper service. Attempting to mount or dismount a tire could cause injury or death. Only your dealer or authorized tire service center should mount or dismount the tires.

⚠ Warning

Mixing tires of different sizes, brands, or types may cause loss of control of the vehicle, resulting in a crash or other vehicle damage. Use the correct size, brand, and type of tires on all wheels.

This vehicle may have a different size spare than the road tires originally installed on the vehicle. When new, the vehicle included a spare tire and wheel assembly with a similar overall diameter as the road tires and wheels, so it is all right to drive on it. The spare tire was developed for use on this vehicle and will not affect vehicle handling.

⚠ Warning

Using bias-ply tires on the vehicle may cause the wheel rim flanges to develop cracks after many miles of driving. A tire and/or wheel could fail suddenly and cause a crash. Use only radial-ply tires with the wheels on the vehicle.

Winter tires with the same speed rating as the original equipment tires may not be available for H, V, W, Y and ZR speed rated tires. Never exceed the winter tires' maximum speed capability when using winter tires with a lower speed rating.

If the vehicle tires must be replaced with a tire that does not have a TPC Spec number, make sure they are the same size, load range, speed rating, and construction (radial) as the original tires.

Vehicles that have a tire pressure monitoring system could give an inaccurate low-pressure warning if non-TPC Spec rated tires are installed. See *Tire Pressure Monitor System* ⇨ *264*.

The Tire and Loading Information label indicates the original equipment tires on the vehicle. See *Vehicle Load Limits* ⇨ *169* for the label location and more information about the Tire and Loading Information label.

Different Size Tires and Wheels

If wheels or tires are installed that are a different size than the original equipment wheels and tires, vehicle performance, including its braking, ride and handling characteristics, stability, and resistance to rollover may be affected. If the vehicle has electronic systems such as antilock brakes, rollover airbags, traction control, electronic stability control, or All-Wheel Drive, the performance of these systems can also be affected.

⚠ Warning

If different sized wheels are used, there may not be an acceptable level of performance and safety if tires not recommended for those wheels are selected. This increases the chance of a crash and serious injury. Only use GM specific wheel and tire systems developed for the vehicle, and have them properly installed by a GM certified technician.

See *Buying New Tires* ⇨ *271* and *Accessories and Modifications* ⇨ *215*.

Uniform Tire Quality Grading

The following information relates to the system developed by the United States National Highway Traffic Safety Administration (NHTSA), which grades tires by treadwear, traction, and temperature performance. This applies only to vehicles sold in the United States. The grades are molded on the sidewalls of most passenger car tires. The Uniform Tire Quality Grading (UTQG) system does not apply to deep tread, winter tires, compact spare tires, tires with nominal rim diameters of 10 to 12 inches (25 to 30 cm), or to some limited-production tires.

While the tires available on General Motors passenger cars and light trucks may vary with respect to these grades, they must also conform to federal safety requirements and additional General Motors Tire Performance Criteria (TPC) standards.

Quality grades can be found where applicable on the tire sidewall between tread shoulder and maximum section width. For example:

Treadwear 200 Traction AA Temperature A

All Passenger Car Tires Must Conform to Federal Safety Requirements In Addition To These Grades.

Treadwear

The treadwear grade is a comparative rating based on the wear rate of the tire when tested under controlled conditions on a specified government test course. For example, a tire graded 150 would wear one and one-half (1½) times as well on the government course as a tire graded 100. The relative performance of tires depends upon the actual conditions of their use, however, and may depart significantly from the norm due to variations in driving habits, service practices and differences in road characteristics and climate.

Traction

The traction grades, from highest to lowest, are AA, A, B, and C. Those grades represent the tire's ability to stop on wet pavement as measured under controlled conditions on specified government test surfaces of asphalt and concrete. A tire marked C may have poor traction performance. Warning: The traction grade assigned to this tire is based on straight-ahead braking traction tests, and does not include acceleration, cornering, hydroplaning, or peak traction characteristics.

Temperature

The temperature grades are A (the highest), B, and C, representing the tire's resistance to the generation of heat and its ability to dissipate heat when tested under controlled conditions on a specified indoor laboratory test wheel. Sustained high temperature can cause the material of the tire to degenerate and reduce tire life, and excessive temperature can lead to sudden tire failure. The grade C corresponds to a level of performance which all passenger car tires must meet under the Federal Motor Safety Standard No. 109. Grades B and A represent higher levels of performance on the laboratory test wheel than the minimum required by law. Warning: The temperature grade for this tire is established for a tire that is properly inflated and not overloaded. Excessive speed,

underinflation, or excessive loading, either separately or in combination, can cause heat buildup and possible tire failure.

Wheel Alignment and Tire Balance

The tires and wheels were aligned and balanced at the factory to provide the longest tire life and best overall performance. Adjustments to wheel alignment and tire balancing are not necessary on a regular basis. Consider an alignment check if there is unusual tire wear or the vehicle is significantly pulling to one side or the other. Some slight pull to the left or right, depending on the crown of the road and/or other road surface variations such as troughs or ruts, is normal. If the vehicle is vibrating when driving on a smooth road, the tires and wheels may need to be rebalanced. See your dealer for proper diagnosis.

Wheel Replacement

Replace any wheel that is bent, cracked, or badly rusted or corroded. If wheel nuts keep coming loose, the wheel, wheel bolts, and wheel nuts should be replaced.
If the wheel leaks air, replace it. Some aluminum wheels can be repaired. See your dealer if any of these conditions exist.

Your dealer will know the kind of wheel that is needed.

Each new wheel should have the same load-carrying capacity, diameter, width, offset, and be mounted the same way as the one it replaces.

Replace wheels, wheel bolts, wheel nuts, or Tire Pressure Monitor System (TPMS) sensors with new GM original equipment parts.

⚠ Warning

Using the wrong replacement wheels, wheel bolts, or wheel nuts can be dangerous. It could affect the braking and handling of the vehicle. Tires can lose air, and cause loss of control, causing a crash. Always use the correct wheel, wheel bolts, and wheel nuts for replacement.

Caution

The wrong wheel can also cause problems with bearing life, brake cooling, speedometer or odometer calibration, headlamp aim, bumper height, vehicle ground clearance, and tire or tire chain clearance to the body and chassis.

Used Replacement Wheels

⚠ Warning

Replacing a wheel with a used one is dangerous. How it has been used or how far it has been driven may be unknown. It could fail suddenly and cause a crash. When replacing wheels, use a new GM original equipment wheel.

Tire Chains

⚠ Warning

Tire chains used on a vehicle without the proper amount of clearance can cause damage to the brakes, suspension, or other vehicle parts. The area damaged by the tire chains could cause you to lose control of the vehicle and you or others may be injured in a crash. To help avoid damage to

(Continued)

Warning (Continued)

the vehicle, drive slowly, readjust, or remove the device if it is contacting the vehicle. Do not spin the vehicle's tires. Follow the manufacturer's instructions.

Caution

Use tire chains only where legal and only when necessary. Use chains that are the proper size for the tires. Install them on the tires of the rear axle. Do not use chains on the tires of the front axle. Tighten them as tightly as possible with the ends securely fastened. Drive slowly and follow the chain manufacturer's instructions. If the chains contact the vehicle, stop and retighten them. If the contact continues, slow down until it stops. Driving

(Continued)

Caution (Continued)

too fast or spinning the wheels with chains on will damage the vehicle.

For Cutaway models with LT245/75R16 or LT225/75R16 size single or dual rear tires, use Low Profile Z-Chain or SAE Class S cables.

For Cargo or Passenger models with LT225/75R16 or LT245/75R16 size tires, use Low Profile Z-Chain cables. SAE Class S chains are not recommended.

If the vehicle has dual rear tires, do not use individual tire chains. Use tire chains that fit across both dual tires.

If a Tire Goes Flat

It is unusual for a tire to blow out while driving, especially if the tires are maintained properly. See *Tires* ⇨ *255*. If air goes out of a tire, it is much more likely to leak out slowly.

But if there ever is a blowout, here are a few tips about what to expect and what to do:

If a front tire fails, the flat tire creates a drag that pulls the vehicle toward that side. Take your foot off the accelerator pedal and grip the steering wheel firmly. Steer to maintain lane position, and then gently brake to a stop, well off the road, if possible.

A rear blowout, particularly on a curve, acts much like a skid and may require the same correction as used in a skid. Stop pressing the accelerator pedal and steer to straighten the vehicle. It may be very bumpy and noisy. Gently brake to a stop, well off the road, if possible.

⚠ Warning

Driving on a flat tire will cause permanent damage to the tire. Re-inflating a tire after it has been driven on while severely

(Continued)

Warning (Continued)

underinflated or flat may cause a blowout and a serious crash. Never attempt to re-inflate a tire that has been driven on while severely underinflated or flat. Have your dealer or an authorized tire service center repair or replace the flat tire as soon as possible.

⚠ Warning

Lifting a vehicle and getting under it to do maintenance or repairs is dangerous without the appropriate safety equipment and training. If a jack is provided with the vehicle, it is designed only for changing a flat tire. If it is used for anything else, you or others could be badly injured or killed if the vehicle slips off the jack. If a jack is provided with the vehicle, only use it for changing a flat tire.

If a tire goes flat, avoid further tire and wheel damage by driving slowly to a level place, well off the road, if possible. Turn on the hazard warning flashers. See *Hazard Warning Flashers* ⇨ *125*.

⚠ Warning

Changing a tire can be dangerous. The vehicle can slip off the jack and roll over or fall causing injury or death. Find a level place to change the tire. To help prevent the vehicle from moving:

1. Set the parking brake firmly.
2. Put an automatic transmission in P (Park) or a manual transmission in 1 (First) or R (Reverse).
3. Turn off the engine and do not restart while the vehicle is raised.
4. Do not allow passengers to remain in the vehicle.

(Continued)

Warning (Continued)

5. Place wheel blocks, if equipped, on both sides of the tire at the opposite corner of the tire being changed.

When the vehicle has a flat tire (2), use the following example as a guide to assist in the placement of the wheel blocks (1), if equipped.

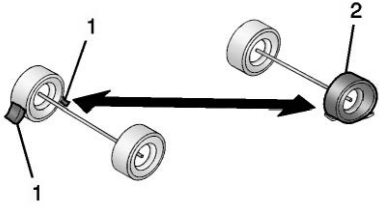

1. Wheel Block (If Equipped)
2. Flat Tire

The following information explains how to repair or change a tire.

Tire Changing

Removing the Spare Tire and Tools

Equipment needed for a cargo van or a passenger van is in the passenger side rear corner of the vehicle.

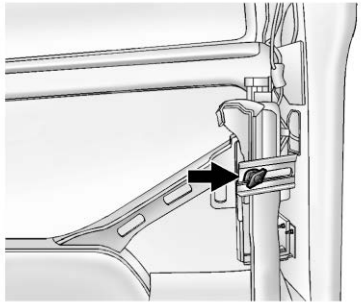

Remove the retaining wing bolt and lift it off of the mounting bracket.

Equipment needed for a 15-passenger seating arrangement is secured on the rear floor on the passenger side of the vehicle.

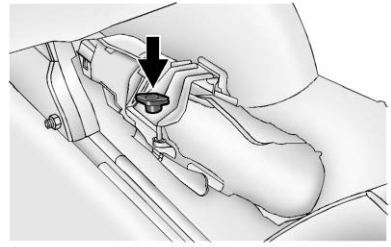

Remove the retaining wing bolt and lift it out of the mounting bracket to access the equipment.

The tools you will be using include:

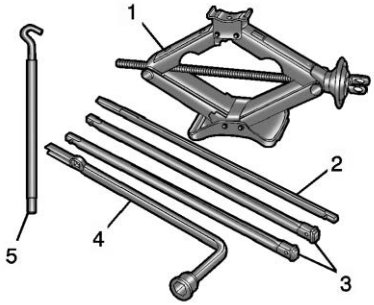

1. Jack
2. Hoist Handle
3. Extension(s)
4. Wheel Wrench
5. Jack Handle

The spare tire is mounted in the rear underbody of the vehicle.

Use the hoist handle, extension(s), and the wheel wrench to remove the underbody-mounted spare tire.

To lower the spare tire from the vehicle:

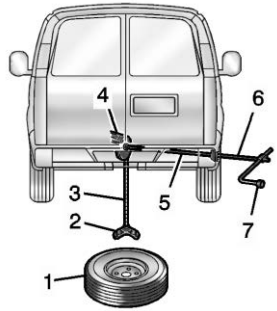

1. Spare Tire
2. Tire/Wheel Retainer
3. Hoist Cable
4. Hoist Assembly
5. Hoist Shaft
6. Hoist Handle and Extension(s)
7. Wheel Wrench

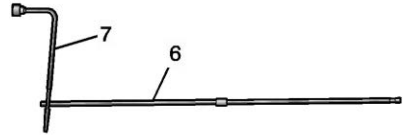

1. Assemble the wheel wrench (7) to the hoist handle and the extension(s) (6).
2. Open the passenger side rear door.
3. Insert the chisel end of the hoist handle, on an angle, through the hole in the rear floor panel above the bumper.

   Be sure the hoist handle connects to the hoist shaft. The chiseled end of the hoist handle is used to lower the spare tire.
4. Turn the wheel wrench counterclockwise to lower the spare tire to the ground. Continue to turn the wheel wrench until the spare tire can be pulled out from under the vehicle.

5. Remove the wheel wrench, extension(s), and hoist handle assembly from the hoist shaft.

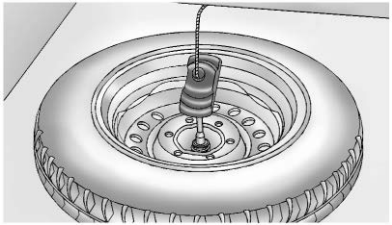

6. When the tire has been lowered, pull it closer to reach the tire retainer and pull it up through the wheel opening.

   For a vehicle that was completed from a cab and chassis, refer to the information from the body supplier/installer.

   The spare tire is a full-size tire, like the other tires on the vehicle.

7. Put the spare tire near the flat tire.
8. Close the passenger side rear door.

Removing the Flat Tire and Installing the Spare Tire

If the vehicle has plastic wheel nut caps, loosen them by turning the wheel wrench counterclockwise. The wheel nut caps are designed to remain with the center cap. Remove the center cap.

If the wheel has a smooth center piece, place the chisel end of the wheel wrench in the slot on the wheel and gently pry it out.

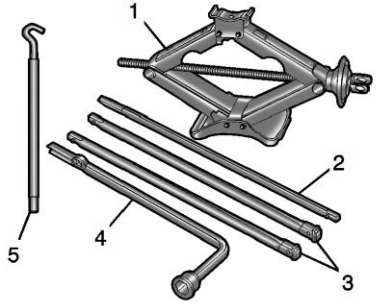

1. Jack
2. Hoist Handle
3. Extension(s)
4. Wheel Wrench
5. Jack Handle

1. Do a safety check before proceeding. See *If a Tire Goes Flat* ⇨ *276*.
2. Loosen all the wheel nuts with the wheel wrench. Do not remove them yet.
3. Assemble the jack and tools:

   Front Flat: Assemble the jack (1) together with the jack handle (5), one or two extension(s) (3), and the wheel wrench (4).

   Rear Flat: Assemble the jack (1) together with the jack handle (5), two extensions (3), and the wheel wrench (4).

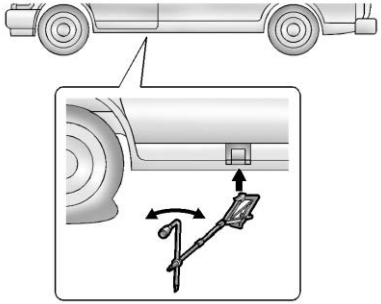

Front Position

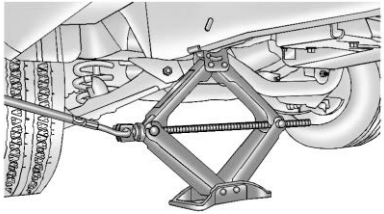

Front Position

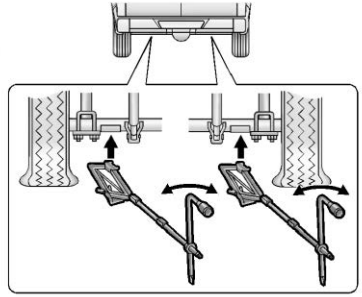

Rear Position

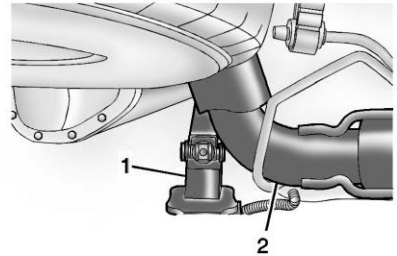

Rear Alternative Position (Diesel Vehicles)

4. Position the jack under the vehicle, as shown.

   The front position jacking point is on the frame. The rear position jacking point is on the rear axle.

   If the exhaust system interferes with the jack location in the rear axle, such as in Diesel vehicles, place the jack (1) on the rear axle between the axle housing and the shock

absorber bracket in order to avoid any interference with the exhaust pipe (2).

⚠ Warning

Getting under a vehicle when it is jacked up is dangerous. If the vehicle slips off the jack you could be badly injured or killed. Never get under a vehicle when it is supported only by a jack.

⚠ Warning

Raising the vehicle with the jack improperly positioned can damage the vehicle and even make the vehicle fall. To help avoid personal injury and vehicle damage, be sure to fit the jack lift head into the proper location before raising the vehicle.

5. Turn the wheel wrench clockwise to raise the vehicle. Raise the vehicle far enough off the ground so there is enough room for the spare tire to fit.

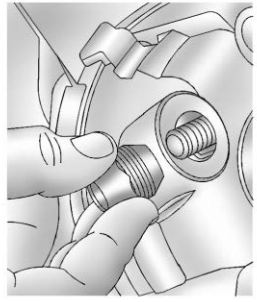

6. Remove all the wheel nuts.
7. Take the flat tire off of the mounting surface.

⚠ Warning

Rust or dirt on a wheel, or on the parts to which it is fastened, can make wheel nuts become loose after time. The wheel could come off and cause an accident. When

(Continued)

Warning (Continued)

changing a wheel, remove any rust or dirt from places where the wheel attaches to the vehicle. In an emergency, a cloth or a paper towel can be used; however, use a scraper or wire brush later to remove all rust or dirt.

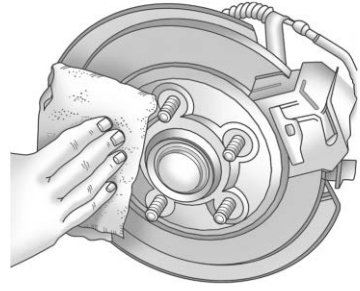

8. Remove any rust or dirt from the wheel bolts, mounting surfaces, and spare wheel.

⚠ Warning

Never use oil or grease on bolts or nuts because the nuts might come loose. The vehicle's wheel could fall off, causing a crash.

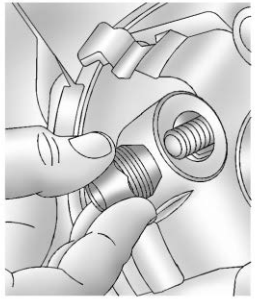

9. Put the wheel nuts back on with the rounded end of the nuts toward the wheel. Tighten each wheel nut by hand until the wheel is held against the hub.

10. Turn the jack handle counterclockwise to lower the vehicle. Lower the jack completely.

⚠ Warning

Wheel nuts that are not tight can work loose. If all the nuts on a wheel come off, the wheel can come off the vehicle, causing a crash. All wheel nuts must be properly tightened. Follow the rules in this section to be sure they are.

⚠ Warning

If wheel studs are damaged, they can break. If all the studs on a wheel broke, the wheel could come off and cause a crash.
If any stud is damaged because of a loose-running wheel, it could be that all of the studs are damaged. To be sure, replace all

(Continued)

Warning (Continued)

studs on the wheel. If the stud holes in a wheel have become larger, the wheel could collapse in operation. Replace any wheel if its stud holes have become larger or distorted in any way. Inspect hubs and hub-piloted wheels for damage. Because of loose running wheels, piloting pad damage may occur and require replacement of the entire hub, for proper centering of the wheels. When replacing studs, hubs, wheel nuts or wheels, be sure to use GM original equipment parts.

⚠ Warning

Wheel nuts that are improperly or incorrectly tightened can cause the wheels to become loose or come off. The wheel nuts should be tightened with a torque wrench

(Continued)

Warning (Continued)

to the proper torque specification after replacing. Follow the torque specification supplied by the aftermarket manufacturer when using accessory locking wheel nuts. See *Capacities and Specifications* ⇨ *315* for original equipment wheel nut torque specifications.

Caution

Improperly tightened wheel nuts can lead to brake pulsation and rotor damage. To avoid expensive brake repairs, evenly tighten the wheel nuts in the proper sequence and to the proper torque specification. See *Capacities and Specifications* ⇨ *315* for the wheel nut torque specification.

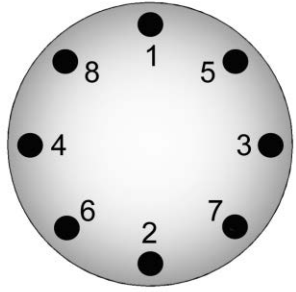

11. Use the wheel wrench to tighten the nuts firmly. Turn the wheel wrench clockwise and in a crisscross sequence, as shown.
12. Put the wheel cover or the center cap and plastic wheel nut caps back on. Remove any wheel blocks.

    Have a technician check the wheel nut tightness of all wheels with a torque wrench after the first 160 km (100 mi) and then 1 600 km (1,000 mi) after that. Repeat this service whenever a tire is removed or serviced. See *Capacities and Specifications* ⇨ *315* for more information.

Storing a Flat or Spare Tire and Tools

⚠ Warning

Storing a jack, a tire, or other equipment in the passenger compartment of the vehicle could cause injury. In a sudden stop or collision, loose equipment could strike someone. Store all these in the proper place.

1. Put the tire on the ground at the rear of the vehicle with the valve stem pointed down.

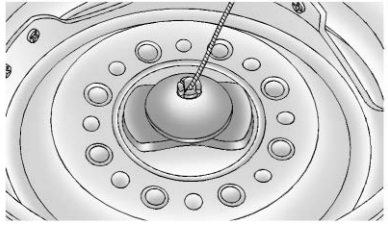

2. Pull the retaining bar through the center of the wheel, making sure it is properly attached.
3. Pull the wheel toward the rear of the vehicle, keeping the cable tight.
4. Open the passenger side rear door.
5. Insert the chisel end of the hoist handle, on an angle, through the hole in the rear floor panel above the bumper.
6. Turn the wheel wrench clockwise to fully raise the tire against the underside of the vehicle. Continue turning the wheel wrench until the tire is secure and the cable is tight.

   Two clicks should occur. The spare tire hoist cannot be overtightened.

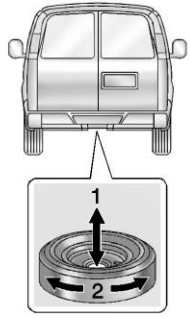

7. Make sure the tire is stored securely. Push, pull (1), and then try to turn (2) the tire. If the tire moves, use the wheel wrench to tighten the cable.

   Two clicks mean the tire is up all the way.
8. Return the jacking equipment to the proper location. Secure the items and replace the jack cover.

Full-Size Spare Tire

If this vehicle came with a full-size spare tire, it was fully inflated when new, however, it can lose air over time. Check the inflation pressure regularly.
See *Tire Pressure* ⇨ *263* and *Vehicle Load Limits* ⇨ *169*. For instructions on how to remove, install, or store a spare tire, see *Tire Changing* ⇨ *278*.

After installing the spare tire on the vehicle, stop as soon as possible and check that the spare is correctly inflated. The spare tire is made to perform well at speeds up to 112 km/h (70 mph) at the recommended inflation pressure, so you can finish your trip.

Have the damaged or flat road tire repaired or replaced back onto the vehicle, as soon as possible, so the spare tire will be available in case it is needed again.

Do not mix tires and wheels of different sizes, because they will not fit. Keep the spare tire and its wheel together.

Jump Starting

Jump Starting - North America

For more information about the vehicle battery, see *Battery - North America* ⇨ *238*.

If the vehicle battery has run down, you may want to use another vehicle and some jumper cables to start your vehicle. Be sure to use the following steps to do it safely.

⚠ Warning

WARNING: Battery posts, terminals, and related accessories contain lead and lead compounds, chemicals known to the State of California to cause cancer and birth defects or other reproductive harm. Batteries also contain other chemicals known to the State of California to cause cancer. **WASH HANDS AFTER**

(Continued)

Warning (Continued)

HANDLING. For more information go to www.P65Warnings.ca.gov/passenger-vehicle.

See *California Proposition 65 Warning* ⇨ *214* and the back cover.

⚠ Warning

Batteries can hurt you. They can be dangerous because:

- They contain acid that can burn you.
- They contain gas that can explode or ignite.
- They contain enough electricity to burn you.

If you do not follow these steps exactly, some or all of these things can hurt you.

Caution

Ignoring these steps could result in costly damage to the vehicle that would not be covered by the vehicle warranty. Trying to start the vehicle by pushing or pulling it will not work, and it could damage the vehicle.

1. Check the other vehicle. It must have a 12-volt battery with a negative ground system.

Caution

If the other vehicle does not have a 12-volt system with a negative ground, both vehicles can be damaged. Only use a vehicle that has a 12-volt system with a negative ground for jump starting.

2. Get the vehicles close enough so the jumper cables can reach, but be sure the vehicles are not touching each other. If they are, it could cause a

ground connection you do not want. You would not be able to start your vehicle, and the bad grounding could damage the electrical systems.

To avoid the possibility of the vehicles rolling, set the parking brake firmly on both vehicles involved in the jump start procedure. Put an automatic transmission in P (Park) or a manual transmission in Neutral before setting the parking brake.

Caution

If any accessories are left on or plugged in during the jump starting procedure, they could be damaged. The repairs would not be covered by the vehicle warranty. Whenever possible, turn off or unplug all accessories on either vehicle when jump starting.

3. Turn the ignition off on both vehicles. Unplug unnecessary accessories plugged into the cigarette lighter or the accessory power outlet. Turn off the radio and all lamps that are not needed. This will avoid sparks and help save both batteries. And it could save the radio!

4. Open the hoods and locate the positive (+) and negative (−) terminal locations of the other vehicle.

   On your van, use the unpainted radio antenna bracket as a remote negative (−) terminal.

⚠ Warning

Using a match near a battery can cause battery gas to explode. People have been hurt doing this, and some have been blinded. Use a flashlight if you need more light.

Battery fluid contains acid that can burn you. Do not get it on you. If you accidentally get it in

(Continued)

Warning (Continued)

your eyes or on your skin, flush the place with water and get medical help immediately.

⚠ Warning

Fans or other moving engine parts can injure you badly. Keep your hands away from moving parts once the engine is running.

5. Check that the jumper cables do not have loose or missing insulation. If they do, you could get a shock. The vehicles could be damaged too.

   Before you connect the cables, here are some basic things you should know. Positive (+) will go to positive (+) or to a remote positive (+) terminal if the vehicle has one. Negative (−) will go to an unpainted metal part or to a remote negative (−) terminal if the vehicle has one.

On your van, use the unpainted radio antenna bracket as a remote negative (−) terminal.

Do not connect positive (+) to negative (−) or you will get a short that would damage the battery and maybe other parts too. And do not connect the negative (−) cable to the negative (−) terminal on the dead battery because this can cause sparks.

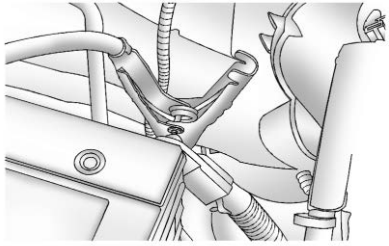

6. Connect the red positive (+) cable to the positive (+) terminal of the dead battery. Use a remote positive (+) terminal if the vehicle has one. Do not let the other end touch metal. Connect it to the positive (+) terminal of the good battery. Use a remote positive (+) terminal if the vehicle has one.

7. Now connect the black negative (−) cable to the negative (−) terminal of the good battery. Use a remote negative (−) terminal if the vehicle has one.

   Do not let the other end touch anything until the next step. The other end of the negative (−) cable does not go to the dead battery. It goes to a heavy, unpainted metal engine part or to a remote negative (−) terminal on the vehicle with the dead battery. On your van, use the unpainted radio antenna bracket as a remote negative (−) terminal.

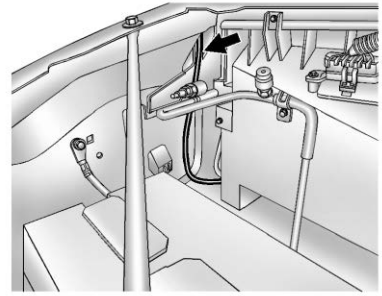

8. Connect the other end of the negative (−) cable to the negative (−) terminal location on the vehicle with the dead battery. On your van, use the unpainted radio antenna bracket as a remote negative (−) terminal.

Caution

The vehicle uses the unpainted radio antenna bracket as a remote negative (-) terminal. Move the antenna coaxial cable

(Continued)

Caution (Continued)

out of the way before clamping the negative jumper cable to the fixed antenna bracket. Avoid touching the negative cable clamp to the air conditioning line. Failure to do either of these could damage the vehicle. The repairs would not be covered by the vehicle warranty.

9. Now start the vehicle with the good battery and run the engine for a while.
10. Try to start the vehicle that had the dead battery. If it will not start after a few tries, it probably needs service.

Caution

If the jumper cables are connected or removed in the wrong order, electrical shorting may occur and damage the

(Continued)

Caution (Continued)

vehicle. The repairs would not be covered by the vehicle warranty. Always connect and remove the jumper cables in the correct order, making sure that the cables do not touch each other or other metal.

Jumper Cable Removal

Reverse the sequence exactly when removing the jumper cables.

After starting the disabled vehicle and removing the jumper cables, allow it to idle for several minutes.

Towing the Vehicle

Caution

Incorrectly towing a disabled vehicle may cause damage. The damage would not be covered by the vehicle warranty.

Do not lash or hook to suspension components. Use the proper straps around the tires to secure the vehicle.

Use only a flatbed tow truck for towing a disabled vehicle. Never use a sling type lift or damage will occur. Use ramps to help reduce approach angles if necessary. A towed vehicle should have its drive wheels off the ground.

Consult a professional towing service if the disabled vehicle must be towed.

Front Attachment Points

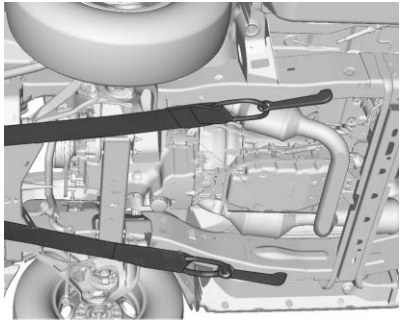

The vehicle is equipped with specific attachment points to be used to pull the vehicle onto a flatbed car carrier from a flat road surface. Do not use these attachment points to pull the vehicle from snow, mud or sand.

Recreational Vehicle Towing

Recreational vehicle towing means towing the vehicle behind another vehicle, such as behind a motor home. The two most common types of recreational vehicle towing are known as dinghy towing and dolly towing. Dinghy towing is towing the vehicle with all four wheels on the ground. Dolly towing is towing the vehicle with two wheels on the ground and two wheels up on a device known as a dolly.

Here are some important things to consider before recreational vehicle towing:

- What is the towing capacity of the towing vehicle? Be sure to read the tow vehicle manufacturer's recommendations.
- What is the distance that will be traveled? Some vehicles have restrictions on how far and how long they can tow.
- Is the proper towing equipment going to be used? See your dealer or trailering professional for additional advice and equipment recommendations.
- Is the vehicle ready to be towed? Just as preparing the vehicle for a long trip, make sure the vehicle is prepared to be towed.

Caution

Use of a shield mounted in front of the vehicle grille could restrict airflow and cause damage to the transmission. The repairs would not be covered by the vehicle warranty. If using a shield, only use one that attaches to the towing vehicle.

Dinghy Towing

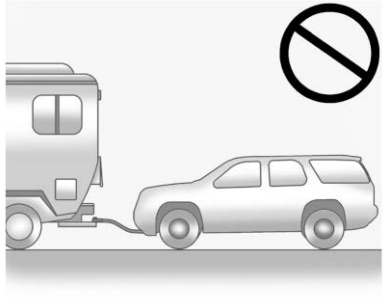

Caution
If the vehicle is towed with all four wheels on the ground, the drivetrain components could be damaged. The repairs would not be covered by the vehicle warranty. Do not tow the vehicle with all four wheels on the ground.

The vehicle should not be towed with all four wheels on the ground.

Dolly Towing

Rear Towing (Rear Wheels Off the Ground)

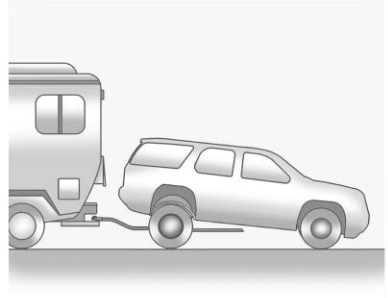

To tow the vehicle from the rear:

1. Attach the dolly to the tow vehicle following the dolly manufacturer's instructions.
2. Drive the rear wheels onto the dolly.
3. Firmly set the parking brake. See *Parking Brake* ⇨ *187*.
4. Put the transmission in P (Park).
5. Secure the vehicle to the dolly following the manufacturer's instructions.
6. Use an adequate clamping device designed for towing to ensure that the front wheels are locked into the straight position.
7. Turn the ignition to off.

   If the tow vehicle will not be started or driven for six weeks or more, remove the battery cable from the negative terminal (post) of the battery to prevent the battery from draining while towing.

Appearance Care

Exterior Care

Locks

Locks are lubricated at the factory. Use a de-icing agent only when absolutely necessary, and have the locks greased after using. See *Recommended Fluids and Lubricants* ⇨ *310*.

Washing the Vehicle

To preserve the vehicle's finish, wash it often and out of direct sunlight.

Caution

Do not use petroleum-based, acidic, or abrasive cleaning agents as they can damage the vehicle's paint, metal, or plastic parts. If damage occurs, it would not be covered by the vehicle warranty. Approved cleaning products can be obtained from

(Continued)

Caution (Continued)

your dealer. Follow all manufacturer directions regarding correct product usage, necessary safety precautions, and appropriate disposal of any vehicle care product.

Caution

Avoid using high-pressure washes closer than 30 cm (12 in) to the surface of the vehicle. Use of power washers exceeding 8,274 kPa (1,200 psi) can result in damage or removal of paint and decals.

Caution

Do not power wash any component under the hood that has this symbol.

(Continued)

Caution (Continued)

This could cause damage that would not be covered by the vehicle warranty.

If using an automatic car wash, follow the car wash instructions. The windshield wiper and rear window wiper, if equipped, must be off. Remove any accessories that may be damaged or interfere with the car wash equipment.

Rinse the vehicle well, before washing and after, to remove all cleaning agents completely. If they are allowed to dry on the surface, they could stain.

Dry the finish with a soft, clean chamois or an all-cotton towel to avoid surface scratches and water spotting.

Finish Care

Application of aftermarket clearcoat sealant/wax materials is not recommended. If painted surfaces are damaged, see your dealer to have the damage assessed and repaired. Foreign materials such as calcium chloride and other salts, ice melting agents, road oil and tar, tree sap, bird droppings, chemicals from industrial chimneys, etc., can damage the vehicle's finish if they remain on painted surfaces. Wash the vehicle as soon as possible. If necessary, use non-abrasive cleaners that are marked safe for painted surfaces to remove foreign matter.

Occasional hand waxing or mild polishing should be done to remove residue from the paint finish. See your dealer for approved cleaning products.

Do not apply waxes or polishes to uncoated plastic, vinyl, rubber, decals, simulated wood, or flat paint as damage can occur.

Caution

Machine compounding or aggressive polishing on a basecoat/clearcoat paint finish may damage it. Use only non-abrasive waxes and polishes that are made for a basecoat/clearcoat paint finish on the vehicle.

To keep the paint finish looking new, keep the vehicle garaged or covered whenever possible.

Protecting Exterior Bright Metal Moldings

Caution

Failure to clean and protect the bright metal moldings can result in a hazy white finish or pitting. This damage would not be covered by the vehicle warranty.

The bright metal moldings on the vehicle are aluminum, chrome, or stainless steel. To prevent damage always follow these cleaning instructions:

- Be sure the molding is cool to the touch before applying any cleaning solution.
- Use only approved cleaning solutions for aluminum, chrome, or stainless steel. Some cleaners are highly acidic or contain alkaline substances and can damage the moldings.
- Always dilute a concentrated cleaner according to the manufacturer’s instructions.
- Do not use cleaners that are not intended for automotive use.
- Use a nonabrasive wax on the vehicle after washing to protect and extend the molding finish.

Cleaning Exterior Lamps/ Lenses, Emblems, Decals, and Stripes

Use only lukewarm or cold water, a soft cloth, and a car washing soap to clean exterior lamps, lenses, emblems, decals, and stripes. Follow instructions under "Washing the Vehicle" previously in this section.

Lamp covers are made of plastic, and some have a UV protective coating. Do not clean or wipe them while they are dry.

Do not use any of the following on lamp covers:

- Abrasive or caustic agents.
- Washer fluids and other cleaning agents in higher concentrations than suggested by the manufacturer.
- Solvents, alcohols, fuels, or other harsh cleaners.
- Ice scrapers or other hard items.
- Aftermarket appearance caps or covers while the lamps are illuminated, due to excessive heat generated.

Caution

Failure to clean lamps properly can cause damage to the lamp cover that would not be covered by the vehicle warranty.

Caution

Using wax on low gloss black finish stripes can increase the gloss level and create a non-uniform finish. Clean low gloss stripes with soap and water only.

Air Intakes

Clear debris from the air intakes, between the hood and windshield when washing the vehicle.

Windshield and Wiper Blades

Clean the outside of the windshield with glass cleaner.

Clean rubber blades using a lint-free cloth or paper towel soaked with windshield washer fluid or a mild detergent. Wash the windshield thoroughly when cleaning the blades. Bugs, road grime, sap, and a buildup of vehicle wash/wax treatments may cause wiper streaking.

Replace the wiper blades if they are worn or damaged. Damage can be caused by extreme dusty conditions, sand, salt, heat, sun, snow, and ice.

Weatherstrips

Apply weatherstrip lubricant on weatherstrips to make them last longer, seal better, and not stick or squeak. Lubricate weatherstrips at least once a year. Hot, dry climates may require more frequent application. Black marks from rubber material on painted surfaces

can be removed by rubbing with a clean cloth. See *Recommended Fluids and Lubricants* ⇨ *310*.

Tires

Use a stiff brush with tire cleaner to clean the tires.

Caution

Using petroleum-based tire dressing products on the vehicle may damage the paint finish and/or tires. When applying a tire dressing, always wipe off any overspray from all painted surfaces on the vehicle.

Wheels and Trim — Aluminum or Chrome

Use a soft, clean cloth with mild soap and water to clean the wheels. After rinsing thoroughly with clean water, dry with a soft, clean towel. A wax may then be applied.

Caution

Chrome wheels and other chrome trim may be damaged if the vehicle is not washed after driving on roads that have been sprayed with magnesium, calcium, or sodium chloride. These chlorides are used on roads for conditions such as ice and dust. Always wash the chrome with soap and water after exposure.

Caution

To avoid surface damage, do not use strong soaps, chemicals, abrasive polishes, cleaners, brushes, or cleaners that contain acid on aluminum or chrome-plated wheels. Use only approved cleaners. Also, never drive a vehicle with aluminum or chrome-plated wheels through an automatic car wash that uses

(Continued)

Caution (Continued)

silicone carbide tire cleaning brushes. Damage could occur and the repairs would not be covered by the vehicle warranty.

Brake System

Visually inspect brake lines and hoses for proper hook-up, binding, leaks, cracks, chafing, etc. Inspect disc brake pads for wear and rotors for surface condition. Inspect drum brake linings/shoes for wear or cracks. Inspect all other brake parts.

Steering, Suspension, and Chassis Components

Visually inspect steering, suspension, and chassis components for damaged, loose, or missing parts or signs of wear at least once a year.

Inspect power steering for proper attachment, connections, binding, leaks, cracks, chafing, etc.

Visually check constant velocity joint boots and axle seals for leaks.

Lubricate the upper and lower control arm ball joints, at least every other engine oil change.

Lubricate the tie rod ball joints, idler arm pivot shaft bearings, idler arm socket, and pitman arm socket, at least every other engine oil change.

Caution
Lubrication of applicable steering/ suspension points should not be done unless the temperature is −12 °C (10 °F) or higher, or damage could result.

Body Component Lubrication

Lubricate all key lock cylinders, hood hinges, liftgate hinges, and the fuel door hinge unless the components are plastic. Applying silicone grease on weatherstrips with a clean cloth will make them last longer, seal better, and not stick or squeak.

Underbody Maintenance

At least twice a year, spring and fall, use plain water to flush dirt and debris from the vehicle's underbody. Your dealer or an underbody car washing system can do this. If not removed, rust and corrosion can develop.

Do not directly power wash the transfer case and/or front/rear axle output seals. High pressure water can overcome the seals and contaminate the fluid. Contaminated fluid will decrease the life of the transfer case and/or axles and should be replaced.

Sheet Metal Damage

If the vehicle is damaged and requires sheet metal repair or replacement, make sure the body repair shop applies anti-corrosion material to parts repaired or replaced to restore corrosion protection.

Original manufacturer replacement parts will provide the corrosion protection while maintaining the vehicle warranty.

Finish Damage

Quickly repair minor chips and scratches with touch-up materials available from your dealer to avoid corrosion. Larger areas of finish damage can be corrected in your dealer's body and paint shop.

Chemical Paint Spotting

Airborne pollutants can fall upon and attack painted vehicle surfaces causing blotchy, ring-shaped discolorations, and small, irregular dark spots etched into the paint surface. See “Finish Care” previously in this section.

Interior Care

To prevent dirt particle abrasions, regularly clean the vehicle's interior. Immediately remove any soils. Newspapers or dark garments can transfer color to the vehicle’s interior.

Use a soft bristle brush to remove dust from knobs and crevices on the instrument cluster. Using a mild soap solution, immediately remove

hand lotions, sunscreen, and insect repellent from all interior surfaces or permanent damage may result.

Use cleaners specifically designed for the surfaces being cleaned to prevent permanent damage. Apply all cleaners directly to the cleaning cloth. Do not spray cleaners on any switches or controls. Remove cleaners quickly.

Before using cleaners, read and follow all safety instructions on the label. While cleaning the interior, open the doors and windows to get proper ventilation.

To prevent damage, do not clean the interior using the following cleaners or techniques:

- Never use a razor or any other sharp object to remove soil from any interior surface.
- Never use a brush with stiff bristles.
- Never rub any surface aggressively or with too much pressure.
- Do not use laundry detergents or dishwashing soaps with degreasers. For liquid cleaners, use approximately 20 drops per 3.8 L (1 gal) of water.
  A concentrated soap solution will create streaks and attract dirt.
  Do not use solutions that contain strong or caustic soap.
- Do not heavily saturate the upholstery when cleaning.
- Do not use solvents or cleaners containing solvents.

Interior Glass

To clean, use a terry cloth fabric dampened with water. Wipe droplets left behind with a clean dry cloth.
If necessary, use a commercial glass cleaner after cleaning with plain water.

Caution

To prevent scratching, never use abrasive cleaners on automotive glass. Abrasive cleaners or aggressive cleaning may damage the rear window defogger.

Cleaning the windshield with water during the first three to six months of ownership will reduce tendency to fog.

Speaker Covers

Vacuum around a speaker cover gently, so that the speaker will not be damaged. Clean spots with water and mild soap.

Coated Moldings

Coated moldings should be cleaned.

- When lightly soiled, wipe with a sponge or soft, lint-free cloth dampened with water.
- When heavily soiled, use warm soapy water.

Fabric/Carpet/Suede

Start by vacuuming the surface using a soft brush attachment. If a rotating vacuum brush attachment is being used, only use it on the floor carpet. Before cleaning, gently remove as much of the soil as possible:

- Gently blot liquids with a paper towel. Continue blotting until no more soil can be removed.
- For solid soils, remove as much as possible prior to vacuuming.

To clean:

1. Saturate a clean, lint-free colorfast cloth with water. Microfiber cloth is recommended to prevent lint transfer to the fabric or carpet.
2. Remove excess moisture by gently wringing until water does not drip from the cleaning cloth.
3. Start on the outside edge of the soil and gently rub toward the center. Fold the cleaning cloth to a clean area frequently to prevent forcing the soil in to the fabric.
4. Continue gently rubbing the soiled area until there is no longer any color transfer from the soil to the cleaning cloth.
5. If the soil is not completely removed, use a mild soap solution followed only by plain water.

If the soil is not completely removed, it may be necessary to use a commercial upholstery cleaner or spot lifter. Test a small hidden area for colorfastness before using a commercial upholstery cleaner or spot lifter. If ring formation occurs, clean the entire fabric or carpet.

After cleaning, use a paper towel to blot excess moisture.

Cleaning High Gloss Surfaces and Vehicle Information and Radio Displays

Use a microfiber cloth on high gloss surfaces or vehicle displays. First, use a soft bristle brush to remove dirt that can scratch the surface. Then gently clean by rubbing with a microfiber cloth. Never use window cleaners or solvents. Periodically hand wash the microfiber cloth separately, using mild soap. Do not use bleach or fabric softener. Rinse thoroughly and air dry before next use.

Caution

Do not attach a device with a suction cup to the display. This may cause damage and would not be covered by the vehicle warranty.

Instrument Panel, Leather, Vinyl, Other Plastic Surfaces, Low Gloss Paint Surfaces, and Natural Open Pore Wood Surfaces

Use a soft microfiber cloth dampened with water to remove dust and loose dirt. For a more thorough cleaning, use a soft microfiber cloth dampened with a mild soap solution.

Caution

Soaking or saturating leather, especially perforated leather, as well as other interior surfaces, may cause permanent damage. Wipe excess moisture from these surfaces after cleaning and allow them to dry naturally. Never use heat, steam, or spot removers. Do not use cleaners that contain silicone or wax-based products. Cleaners containing these solvents can permanently change

(Continued)

Caution (Continued)

the appearance and feel of leather or soft trim, and are not recommended.

Do not use cleaners that increase gloss, especially on the instrument panel. Reflected glare can decrease visibility through the windshield under certain conditions.

Caution

Use of air fresheners may cause permanent damage to plastics and painted surfaces. If an air freshener comes in contact with any plastic or painted surface in the vehicle, blot immediately and clean with a soft cloth dampened with a mild soap solution. Damage caused by air fresheners would not be covered by the vehicle warranty.

Cargo Cover and Convenience Net

If equipped, wash with warm water and mild detergent. Do not use chlorine bleach. Rinse with cold water, and then dry completely.

Care of Seat Belts

Keep belts clean and dry.

⚠ Warning

Do not bleach or dye seat belt webbing. It may severely weaken the webbing. In a crash, they might not be able to provide adequate protection. Clean and rinse seat belt webbing only with mild soap and lukewarm water. Allow the webbing to dry.

Floor Mats

⚠ Warning

If a floor mat is the wrong size or is not properly installed, it can interfere with the pedals. Interference with the pedals can cause unintended acceleration and/or increased stopping distance which can cause a crash and injury. Make sure the floor mat does not interfere with the pedals.

Use the following guidelines for proper floor mat usage.

- The original equipment floor mats were designed for the vehicle. If the floor mats need replacing, it is recommended that GM certified floor mats be purchased. Non-GM floor mats may not fit properly and may interfere with the pedals. Always check that the floor mats do not interfere with the pedals.
- Use the floor mat with the correct side up. Do not turn it over.
- Do not place anything on top of the driver side floor mat.
- Use only a single floor mat on the driver side.
- Do not place one floor mat on top of another.

Service and Maintenance

General Information
General Information 301

Maintenance Schedule
Maintenance Schedule 303

Special Application Services
Special Application Services 307

Additional Maintenance and Care
Additional Maintenance and Care 307

Recommended Fluids, Lubricants, and Parts
Recommended Fluids and Lubricants 310
Maintenance Replacement Parts 312

Maintenance Records
Maintenance Records 313

General Information

Your vehicle is an important investment. This section describes the required maintenance for the vehicle. Follow this schedule to help protect against major repair expenses resulting from neglect or inadequate maintenance. It may also help to maintain the value of the vehicle if it is sold. It is the responsibility of the owner to have all required maintenance performed.

Your dealer has trained technicians who can perform required maintenance using genuine replacement parts. They have up-to-date tools and equipment for fast and accurate diagnostics. Many dealers have extended evening and Saturday hours, courtesy transportation, and online scheduling to assist with service needs.

Your dealer recognizes the importance of providing competitively priced maintenance and repair services. With trained technicians, the dealer is the place for routine maintenance such as oil changes and tire rotations and additional maintenance items like tires, brakes, batteries, and wiper blades.

Caution

Damage caused by improper maintenance can lead to costly repairs and may not be covered by the vehicle warranty. Maintenance intervals, checks, inspections, recommended fluids, and lubricants are important to keep the vehicle in good working condition.

Do not have chemical flushes that are not approved by GM performed on the vehicle. The use of flushes, solvents, cleaners, or lubricants that are not approved by GM could damage the vehicle, requiring expensive repairs that are not covered by the vehicle warranty.

The Tire Rotation and Required Services are the responsibility of the vehicle owner. It is recommended to have your dealer perform these services every 12 000 km/7,500 mi. Proper vehicle maintenance helps to keep the vehicle in good working condition, improves fuel economy, and reduces vehicle emissions.

Because of the way people use vehicles, maintenance needs vary. There may need to be more frequent checks and services. The Additional Required Services - Normal are for vehicles that:

- Carry passengers and cargo within recommended limits on the Tire and Loading Information label. See *Vehicle Load Limits* ⇨ *169*.
- Are driven on reasonable road surfaces within legal driving limits.
- Use the recommended fuel. See *Fuel* ⇨ *197*.

Refer to the information in the Maintenance Schedule Additional Required Services - Normal chart.

The Additional Required Services - Severe are for vehicles that are:

- Mainly driven in heavy city traffic in hot weather
- Mainly driven in hilly or mountainous terrain
- Frequently towing a trailer
- Used for high speed or competitive driving
- Used for taxi, police, or delivery service

Refer to the information in the Maintenance Schedule Additional Required Services - Severe chart.

⚠ Warning

Performing maintenance work can be dangerous and can cause serious injury. Perform maintenance work only if the required information, proper tools, and equipment are available.
If they are not, see your dealer to

(Continued)

Warning (Continued)

have a trained technician do the work. See *Doing Your Own Service Work* ⇨ *215*.

Maintenance Schedule

Owner Checks and Services

At Each Fuel Stop

- Check the engine oil level. See *Engine Oil* ⇨ *220*.

Once a Month

- Check the tire inflation pressures. See *Tire Pressure* ⇨ *263*.
- Inspect the tires for wear. See *Tire Inspection* ⇨ *268*.
- Check the windshield washer fluid level. See *Washer Fluid* ⇨ *235*.

Engine Oil Change

When the CHANGE ENGINE OIL SOON message displays, have the engine oil and filter changed within the next 1 000 km/600 mi. If driven under the best conditions, the engine oil life system may not indicate the need for vehicle service for up to a year. The engine oil and filter must be changed at least once a year and the oil life system must be reset. Your trained dealer technician can perform this work. If the engine oil life system is reset accidentally, service the vehicle within 5 000 km/3,000 mi since the last service. Reset the oil life system when the oil is changed. See *Engine Oil Life System* ⇨ *222*.

Power Take Off (PTO) and Extended Idle Use

When the vehicle is used with the PTO equipment or used in a way that requires extended idle time, one hour of use shall be deemed the same as 53 km (33 mi). See *Driver Information Center (DIC)* ⇨ *111* for hourmeter.

Tire Rotation and Required Services Every 12 000 km/ 7,500 mi

Rotate the tires, if recommended for the vehicle, and perform the following services. See *Tire Rotation* ⇨ *268*.

- Check engine oil level and oil life percentage. If needed, change engine oil and filter, and reset oil life system. See *Engine Oil* ⇨ *220* and *Engine Oil Life System* ⇨ *222*.
- Check engine coolant level. See *Cooling System* ⇨ *229*.
- Check windshield washer fluid level. See *Washer Fluid* ⇨ *235*.
- Visually inspect windshield wiper blades for wear, cracking, or contamination. See *Exterior Care* ⇨ *292*. Replace worn or damaged wiper blades. See *Wiper Blade Replacement* ⇨ *242*.
- Check tire inflation pressures. See *Tire Pressure* ⇨ *263*.
- Inspect tire wear. See *Tire Inspection* ⇨ *268*.
- Visually check for fluid leaks.
- Inspect engine air cleaner filter. See *Engine Air Cleaner/Filter* ⇨ *227*.
- Inspect brake system. See *Exterior Care* ⇨ *292*.

- Visually inspect steering, suspension, and chassis components for damaged, loose, or missing parts or signs of wear. See *Exterior Care* ⇨ *292*.
- Check restraint system components. See *Safety System Check* ⇨ *55*.
- Visually inspect fuel system for damage or leaks.
- Visually inspect exhaust system and nearby heat shields for loose or damaged parts.
- Lubricate body components. See *Exterior Care* ⇨ *292*.
- Check starter switch. See *Starter Switch Check* ⇨ *241*.
- Check automatic transmission shift lock control function. See *Automatic Transmission Shift Lock Control Function Check* ⇨ *241*.
- Check ignition transmission lock. See *Ignition Transmission Lock Check* ⇨ *242*.
- Check parking brake and automatic transmission park mechanism. See *Park Brake and P (Park) Mechanism Check* ⇨ *242*.
- Check accelerator pedal for damage, high effort, or binding. Replace if needed.
- Visually inspect gas strut for signs of wear, cracks, or other damage. Check the hold open ability of the strut. If the hold open is low, service the gas strut. See *Gas Strut(s)* ⇨ *243*.
- Lubricate the steering linkage (greasable joints). See Normal and Severe Maintenance Schedules. For severe commercial use vehicles, see *Special Application Services* ⇨ *307*.

Maintenance Schedule Additional Required Services - Normal	12 000 km/7,500 mi	24 000 km/15,000 mi	36 000 km/22,500 mi	48 000 km/30,000 mi	60 000 km/37,500 mi	72 000 km/45,000 mi	84 000 km/52,500 mi	96 000 km/60,000 mi	108 000 km/67,500 mi	120 000 km/75,000 mi	132 000 km/82,500 mi	144 000 km/90,000 mi	156 000 km/97,500 mi	168 000 km/105,000 mi	180 000 km/112,500 mi	192 000 km/120,000 mi	204 000 km/127,500 mi	216 000 km/135,000 mi	228 000 km/142,500 mi	240 000 km/150,000 mi
Rotate tires and perform Required Services. Check engine oil level and oil life percentage. Change engine oil and filter, if needed. Lubricate the steering linkage.	✓	✓	✓	✓	✓	✓	✓	✓	✓	✓	✓	✓	✓	✓	✓	✓	✓	✓	✓	✓
Inspect evaporative control system. (1)						✓						✓						✓		
Replace engine air cleaner filter. (2)						✓						✓						✓		
Replace spark plugs. Inspect spark plug wires.													✓							
Drain and fill engine cooling system. (3)																				✓
Visually inspect accessory drive belts. (4)																				✓
Replace brake fluid. (5)																				

Footnotes — Maintenance Schedule Additional Required Services - Normal

(1) Visually check all fuel and vapor lines and hoses for proper attachment, connection, routing, and condition.

(2) Or every four years, whichever comes first. If driving in dusty conditions, inspect the filter at each oil change or more often as needed.

(3) Or every five years, whichever comes first. See *Cooling System* ⇨ *229*.

(4) Or every 10 years, whichever comes first. Inspect for fraying, excessive cracking, or damage; replace, if needed.

(5) Replace brake fluid every five years. See *Brake Fluid* ⇨ *237*.

Maintenance Schedule Additional Required Services - Severe	12 000 km/7,500 mi	24 000 km/15,000 mi	36 000 km/22,500 mi	48 000 km/30,000 mi	60 000 km/37,500 mi	72 000 km/45,000 mi	84 000 km/52,500 mi	96 000 km/60,000 mi	108 000 km/67,500 mi	120 000 km/75,000 mi	132 000 km/82,500 mi	144 000 km/90,000 mi	156 000 km/97,500 mi	168 000 km/105,000 mi	180 000 km/112,500 mi	192 000 km/120,000 mi	204 000 km/127,500 mi	216 000 km/135,000 mi	228 000 km/142,500 mi	240 000 km/150,000 mi
Rotate tires and perform Required Services. Check engine oil level and oil life percentage. Change engine oil and filter, if needed. Lubricate the steering linkage.	✓	✓	✓	✓	✓	✓	✓	✓	✓	✓	✓	✓	✓	✓	✓	✓	✓	✓	✓	✓
Inspect evaporative control system. (1)						✓						✓						✓		
Replace engine air cleaner filter. (2)						✓						✓						✓		
Change automatic transmission fluid and filter.						✓						✓						✓		
Replace spark plugs. Inspect spark plug wires.													✓							
Drain and fill engine cooling system. (3)																				✓
Visually inspect accessory drive belts. (4)																				✓
Replace brake fluid. (5)																				

Footnotes — Maintenance Schedule Additional Required Services - Severe

(1) Visually check all fuel and vapor lines and hoses for proper attachment, connection, routing, and condition.

(2) Or every four years, whichever comes first. If driving in dusty conditions, inspect the filter at each oil change or more often as needed.

(3) Or every five years, whichever comes first. See *Cooling System* ⇨ *229*.

(4) Or every 10 years, whichever comes first. Inspect for fraying, excessive cracking, or damage; replace, if needed.

(5) Replace brake fluid every five years. See *Brake Fluid* ⇨ *237*.

Special Application Services

- Vehicles with Dual Wheels: Check dual wheel nut torque at 160, 1 600, and 10 000 km (100, 1,000, and 6,000 mi) of driving. Repeat this service whenever a tire/wheel is serviced or removed.
- Severe Commercial Use Vehicles Only: Lubricate chassis components every oil change.
- Have underbody flushing service performed. See “Underbody Maintenance” in *Exterior Care* ⇨ *292*.

Additional Maintenance and Care

Your vehicle is an important investment and caring for it properly may help to avoid future costly repairs. To maintain vehicle performance, additional maintenance services may be required.

It is recommended that your dealer perform these services — their trained dealer technicians know your vehicle best. Your dealer can also perform a thorough assessment with a multi-point inspection to recommend when your vehicle may need attention.

The following list is intended to explain the services and conditions to look for that may indicate services are required.

Battery

The 12-volt battery supplies power to start the engine and operate any additional electrical accessories.

- To avoid break-down or failure to start the vehicle, maintain a battery with full cranking power.
- Trained dealer technicians have the diagnostic equipment to test the battery and ensure that the connections and cables are corrosion-free.

Belts

- Belts may need replacing if they squeak or show signs of cracking or splitting.
- Trained dealer technicians have access to tools and equipment to inspect the belts and recommend adjustment or replacement when necessary.

Brakes

Brakes stop the vehicle and are crucial to safe driving.

- Signs of brake wear may include chirping, grinding, or squealing noises, or difficulty stopping.

- Trained dealer technicians have access to tools and equipment to inspect the brakes and recommend quality parts engineered for the vehicle.

Fluids

Proper fluid levels and approved fluids protect the vehicle's systems and components. See *Recommended Fluids and Lubricants* ⇨ *310* for GM approved fluids.

- Engine oil and windshield washer fluid levels should be checked at every fuel fill.
- Instrument cluster lights may come on to indicate that fluids may be low and need to be filled.

Hoses

Hoses transport fluids and should be regularly inspected to ensure that there are no cracks or leaks. With a multi-point inspection, your dealer can inspect the hoses and advise if replacement is needed.

Lamps

Properly working headlamps, taillamps, and brake lamps are important to see and be seen on the road.

- Signs that the headlamps need attention include dimming, failure to light, cracking, or damage. The brake lamps need to be checked periodically to ensure that they light when braking.
- With a multi-point inspection, your dealer can check the lamps and note any concerns.

Shocks and Struts

Shocks and struts help aid in control for a smoother ride.

- Signs of wear may include steering wheel vibration, bounce/sway while braking, longer stopping distance, or uneven tire wear.
- As part of the multi-point inspection, trained dealer technicians can visually inspect the shocks and struts for signs of leaking, blown seals, or damage, and can advise when service is needed.

Tires

Tires need to be properly inflated, rotated, and balanced. Maintaining the tires can save money and fuel, and can reduce the risk of tire failure.

- Signs that the tires need to be replaced include three or more visible treadwear indicators; cord or fabric showing through the rubber; cracks or cuts in the tread or sidewall; or a bulge or split in the tire.
- Trained dealer technicians can inspect and recommend the right tires. Your dealer can also provide tire/wheel balancing services to ensure smooth vehicle operation at all speeds. Your dealer sells and services name brand tires.

Vehicle Care

To help keep the vehicle looking like new, vehicle care products are available from your dealer. For information on how to clean and protect the vehicle's interior and exterior, see *Interior Care* ⇨ *296* and *Exterior Care* ⇨ *292*.

Wheel Alignment

Wheel alignment is critical for ensuring that the tires deliver optimal wear and performance.

- Signs that the alignment may need to be adjusted include pulling, improper vehicle handling, or unusual tire wear.
- Your dealer has the required equipment to ensure proper wheel alignment.

Windshield

For safety, appearance, and the best viewing, keep the windshield clean and clear.

- Signs of damage include scratches, cracks, and chips.
- Trained dealer technicians can inspect the windshield and recommend proper replacement if needed.

Wiper Blades

Wiper blades need to be cleaned and kept in good condition to provide a clear view.

- Signs of wear include streaking, skipping across the windshield, and worn or split rubber.
- Trained dealer technicians can check the wiper blades and replace them when needed.

Recommended Fluids, Lubricants, and Parts

Recommended Fluids and Lubricants

This maintenance section applies to vehicles with a gasoline engine. If the vehicle has a diesel engine, see the maintenance schedule section in the Duramax diesel supplement.

Fluids and lubricants identified below by name, part number, or specification can be obtained from your dealer.

Usage	Fluid/Lubricant
Automatic Transmission (6-Speed Transmission)	DEXRON-VI Automatic Transmission Fluid.
Automatic Transmission (8-Speed Transmission)	DEXRON-HP Automatic Transmission Fluid (GM Part No. 19331925, in Canada 19300537).
Chassis Lubrication, Parking Brake Cable Guides	Chassis Lubricant (GM Part No. 12377985, in Canada 88901242) or lubricant meeting requirements of NLGI #2, Category LB or GC-LB.
Engine Coolant	50/50 mixture of clean, drinkable water and use only DEX-COOL Coolant. See *Cooling System* ⇨ *229*.
Engine Oil	Engine oil meeting the dexos1 specification of the proper SAE viscosity grade. ACDelco dexos1 is recommended. See *Engine Oil* ⇨ *220*.
Front Wheel Bearings	Wheel bearing lubricant meeting requirements of NLGI #2, Category GC or GC-LB (GM Part No. 1051344, in Canada 993037).
Hydraulic Brake System	DOT 3 Hydraulic Brake Fluid (GM Part No. 19353126, in Canada 19299819).

Usage	Fluid/Lubricant
Key Lock Cylinders, Hood Hinges	Multi-Purpose Lubricant, Superlube (GM Part No. 12346241, in Canada 10953474).
Power Steering System	GM Power Steering Fluid (GM Part No. 19329450, in Canada 89021186).
Rear Axle (Dual Rear Wheels)	SAE 75W-90 Synthetic Axle Lubricant (GM Part No. 88900401, in Canada 89021678).
Rear Axle (Single Rear Wheels)	SAE 75W-85 Synthetic Axle Lubricant (GM Part No. 19300457, in Canada 19300458).
Weatherstrip Conditioning	Weatherstrip lubricant (GM Part No. 3634770, in Canada 10953518) or equivalent.
Weatherstrip Squeaks	Synthetic Grease with Teflon, Superlube (GM Part No. 12371287, in Canada 10953437).
Windshield Washer	Automotive windshield washer fluid that meets regional freeze protection requirements.

Maintenance Replacement Parts

If the vehicle has the Duramax diesel engine, see the Duramax diesel supplement.

Replacement parts identified below by name, part number, or specification can be obtained from your dealer.

Part	GM Part Number	ACDelco Part Number
Engine Air Cleaner/Filter		
4.3L V6 Engine	84065602	A3228C
6.0L V8 Engine	84000015	A3221C
Engine Oil Filter		
4.3L V6 Engine	19330000	PF63E
6.0L V8 Engine	19303975	PF48E
Spark Plugs		
4.3L V6 Engine	12622441	41-114
6.0L V8 Engine	12621258	41-110
Wiper Blades – 56.0 cm (22 in)	15214346	—

Maintenance Records

After the scheduled services are performed, record the date, odometer reading, who performed the service, and the type of services performed in the boxes provided. Retain all maintenance receipts.

Date	Odometer Reading	Serviced By	Services Performed

Technical Data

Vehicle Identification
Vehicle Identification Number (VIN) 314
Service Parts Identification Label 314

Vehicle Data
Capacities and Specifications 315
Engine Drive Belt Routing 317

Vehicle Identification

Vehicle Identification Number (VIN)

This legal identifier is in the front corner of the instrument panel, on the driver side of the vehicle. It can be seen through the windshield from outside. The Vehicle Identification Number (VIN) also appears on the Vehicle Certification and Service Parts labels and certificates of title and registration.

Engine Identification

The eighth character in the VIN is the engine code. This code identifies the vehicle's engine, specifications, and replacement parts. See “Engine Specifications” under *Capacities and Specifications* ⇨ *315* for the vehicle's engine code.

Service Parts Identification Label

There may be a label on the on the rear edge of the passenger side front door that contains the following information:

- Vehicle Identification Number (VIN)
- Model designation
- Paint information
- Production options and special equipment

If there is no label, there is a barcode on the certification label on the center (B) pillar to scan for this same information.

Vehicle Data

Capacities and Specifications

If the vehicle has a diesel engine, see the Duramax diesel supplement for more information.

The following approximate capacities are given in metric and English conversions. See *Recommended Fluids and Lubricants* ⇨ *310* for more information.

Application	Capacities	
	Metric	English
Air Conditioning Refrigerant R134a	For the air conditioning system refrigerant charge amount, see the refrigerant label located under the hood. See your dealer for more information.	
Cooling System without Rear Heat		
4.3L V6	10.1 L	10.7 qt
6.0L V8	13.1 L	13.8 qt
Cooling System with Rear Heat		
4.3L V6	12.4 L	13.1 qt
6.0L V8	16.1 L	17.0 qt
Engine Oil with Filter	5.7 L	6.0 qt
Fuel Tank		
Cutaway (Optional Tank)*	215.7 L	57.0 gal

Application	Capacities	
	Metric	English
Cutaway (Standard Tank)	124.9 L	33.0 gal
Passenger and Cargo	117.3 L	31.0 gal
* 4 039 mm (159 in) wheelbase or 4 496 mm (177 in) wheelbase only		
Wheel Nut Torque	190 N•m	140 lb ft
All capacities are approximate. When adding, be sure to fill to the approximate level, as recommended in this manual. Recheck fluid level after filling.		

Engine Specifications

Engine	VIN Code	Transmission	Spark Plug Gap
4.3L V6 (LV1)	P	Automatic	0.95–1.10 mm (0.037–0.043 in)
6.0L V8 (L96)	G	Automatic	0.95–1.10 mm (0.037–0.043 in)
6.0L V8 (LC8) (Capable of Being Upfit for Gaseous Fuel)	B	Automatic	0.95–1.10 mm (0.037–0.043 in)

Engine Drive Belt Routing

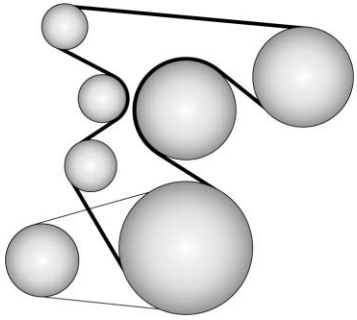

4.3L V6 Engine (LV1)

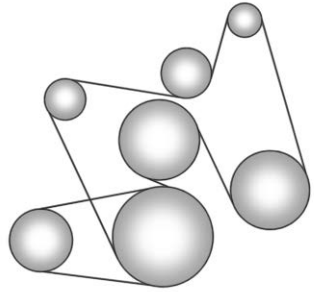

6.0L V8 Engine (L96/LC8)

If equipped with a diesel engine, see the Duramax diesel supplement.

Customer Information

Customer Information
Customer Satisfaction Procedure 318
Customer Assistance Offices 320
Customer Assistance for Text Telephone (TTY) Users 321
Online Owner Center 321
GM Mobility Reimbursement Program 322
Roadside Assistance Program 322
Scheduling Service Appointments 324
Courtesy Transportation Program 324
Collision Damage Repair 325
Service Publications Ordering Information 327
Radio Frequency Statement 328

Reporting Safety Defects
Reporting Safety Defects to the United States Government 329
Reporting Safety Defects to the Canadian Government 329
Reporting Safety Defects to General Motors 329

Vehicle Data Recording and Privacy
Vehicle Data Recording and Privacy 330
Event Data Recorders 330
OnStar 331
Infotainment System 331

Customer Information

Customer Satisfaction Procedure

Your satisfaction and goodwill are important to your dealer and to Chevrolet. Normally, any concerns with the sales transaction or the operation of the vehicle will be resolved by your dealer's sales or service departments. Sometimes, however, despite the best intentions of all concerned, misunderstandings can occur. If your concern has not been resolved to your satisfaction, the following steps should be taken:

STEP ONE : Discuss your concern with a member of dealership management. Normally, concerns can be quickly resolved at that level. If the matter has already been reviewed with the sales, service, or parts manager, contact the owner of your dealership or the general manager.

STEP TWO : If after contacting a member of dealership management, it appears your concern cannot be

resolved by your dealership without further help, in the U.S., call the Chevrolet Customer Assistance Center at 1-800-222-1020. In Canada, call General Motors of Canada Customer Care Centre at 1-800-263-3777 (English), or 1-800-263-7854 (French).

We encourage you to call the toll-free number in order to give your inquiry prompt attention. Have the following information available to give the Customer Assistance representative:

- Vehicle Identification Number (VIN). This is available from the vehicle registration or title, or the plate at the top left of the instrument panel and visible through the windshield.
- Dealership name and location.
- Vehicle delivery date and present mileage.

When contacting Chevrolet, remember that your concern will likely be resolved at a dealer's facility. That is why we suggest following Step One first.

STEP THREE — U.S. Owners : Both General Motors and your dealer are committed to making sure you are completely satisfied with your new vehicle. However, if you continue to remain unsatisfied after following the procedure outlined in Steps One and Two, you can file with the Better Business Bureau (BBB) Auto Line Program to enforce your rights.

The BBB Auto Line Program is an out-of-court program administered by the Council of Better Business Bureaus to settle automotive disputes regarding vehicle repairs or the interpretation of the New Vehicle Limited Warranty. Although you may be required to resort to this informal dispute resolution program prior to filing a court action, use of the program is free of charge and your case will generally be heard within 40 days. If you do not agree with the decision given in your case, you may reject it and proceed with any other venue for relief available to you.

You may contact the BBB Auto Line Program using the toll-free telephone number or write them at the following address:

BBB Auto Line Program
Council of Better Business Bureaus, Inc.
3033 Wilson Boulevard
Suite 600
Arlington, VA 22201

Telephone: 1-800-955-5100
http://www.bbb.org/council/programs-services/dispute-handling-and-resolution/bbb-auto-line

This program is available in all 50 states and the District of Columbia. Eligibility is limited by vehicle age, mileage, and other factors. General Motors reserves the right to change eligibility limitations and/or discontinue its participation in this program.

STEP THREE — Canadian Owners : In the event that you do not feel your concerns have been addressed after following the procedure outlined in Steps One

and Two, General Motors of Canada Company wants you to be aware of its participation in a no-charge Mediation/Arbitration Program. General Motors of Canada Company has committed to binding arbitration of owner disputes involving factory-related vehicle service claims. The program provides for the review of the facts involved by an impartial third party arbiter, and may include an informal hearing before the arbiter. The program is designed so that the entire dispute settlement process, from the time you file your complaint to the final decision, should be completed in about 70 days. We believe our impartial program offers advantages over courts in most jurisdictions because it is informal, quick, and free of charge.

For further information concerning eligibility in the Canadian Motor Vehicle Arbitration Plan (CAMVAP), call toll-free 1-800-207-0685, or call the General Motors Customer Care Centre, 1-800-263-3777 (English), 1-800-263-7854 (French), or write to:

The Mediation/Arbitration Program
c/o Customer Care Centre
General Motors of Canada Company
Mail Code: CA1-163-005
1908 Colonel Sam Drive
Oshawa, Ontario L1H 8P7

Your inquiry should be accompanied by the Vehicle Identification Number (VIN).

Customer Assistance Offices

Chevrolet encourages customers to call the toll-free number for assistance. However, if a customer wishes to write or e-mail Chevrolet, the letter should be addressed to:

United States and Puerto Rico

Chevrolet Motor Division
Chevrolet Customer Assistance Center
P.O. Box 33170
Detroit, MI 48232-5170
www.Chevrolet.com

1-800-222-1020
1-800-833-2438 (For Text Telephone Devices (TTYs))
Roadside Assistance:
1-800-243-8872

From U.S. Virgin Islands:

1-800-496-9994

Canada

General Motors of Canada Company
Customer Care Centre, Mail Code: CA1-163-005
1908 Colonel Sam Drive
Oshawa, Ontario L1H 8P7
www.gm.ca

1-800-263-3777 (English)
1-800-263-7854 (French)
1-800-263-3830 (For Text

Telephone devices (TTYs))
Roadside Assistance:
1-800-268-6800

Overseas

Please contact the local General Motors Business Unit.

Customer Assistance for Text Telephone (TTY) Users

To assist customers who are deaf, hard of hearing, or speech-impaired and who use Text Telephones (TTYs), Chevrolet has TTY equipment available at its Customer Assistance Center. Any TTY user in the U.S. can communicate with Chevrolet by dialing:
1-800-833-2438. TTY users in Canada can dial 1-800-263-3830.

Online Owner Center

Online Owner Experience (U.S.) my.chevrolet.com

The Chevrolet online owner experience allows interaction with Chevrolet and keeps important vehicle-specific information in one place.

Membership Benefits

: Download owner's manuals and view vehicle-specific how-to videos.

: View maintenance schedules, alerts, and OnStar Vehicle Diagnostic Information. Schedule service appointments.

: View and print dealer-recorded service records and self-recorded service records.

: Select a preferred dealer and view locations, maps, phone numbers, and hours.

: Track your vehicle's warranty information.

: View active recalls by Vehicle Identification Number (VIN). See *Vehicle Identification Number (VIN)* ⇨ *314*.

: View GM Card, SiriusXM Satellite radio (if equipped), and OnStar account information (if equipped).

: Chat with online help representatives.

See my.chevrolet.com to register your vehicle.

Chevrolet Owner Centre (Canada) chevroletowner.ca

Visit the Chevrolet Owner Centre:

- Chat live with online help representatives.
- Locate owner resources such as lease-end, financing, and warranty information.
- Retrieve your favorite articles, quizzes, tips, and multimedia galleries organized into the Featured Articles and Auto Care Sections.
- Download owner's manuals.

- Find the Chevrolet-recommended maintenance services.

GM Mobility Reimbursement Program

GENERAL MOTORS MOBILITY

This program is available to qualified applicants for cost reimbursement, up to certain limits, of eligible aftermarket adaptive equipment required for the vehicle, such as hand controls or a wheelchair/scooter lift for the vehicle.

To learn about the GM Mobility program, see www.gmmobility.com or call the GM Mobility Assistance Center at 1-800-323-9935. Text Telephone (TTY) users, call 1-800-833-9935.

General Motors of Canada also has a Mobility program. See www.gm.ca or call 1-800-GM-DRIVE (800-463-7483) for details. TTY users call 1-800-263-3830.

Roadside Assistance Program

For U.S.-purchased vehicles, call 1-800-243-8872. (Text Telephone (TTY): 1-888-889-2438.)

For Canadian-purchased vehicles, call 1-800-268-6800.

Service is available 24 hours a day, 365 days a year.

Calling for Assistance

When calling Roadside Assistance, have the following information ready:

- Your name, home address, and home telephone number
- Telephone number of your location
- Location of the vehicle
- Model, year, color, and license plate number of the vehicle
- Odometer reading, Vehicle Identification Number (VIN), and delivery date of the vehicle
- Description of the problem

Coverage

Services are provided for the duration of the vehicle's powertrain warranty.

In the U.S., anyone driving the vehicle is covered. In Canada, a person driving the vehicle without permission from the owner is not covered.

Roadside Assistance is not a part of the New Vehicle Limited Warranty. General Motors North America and Chevrolet reserve the right to make any changes or discontinue the Roadside Assistance program at any time without notification.

General Motors North America and Chevrolet reserve the right to limit services or payment to an owner or

driver if they decide the claims are made too often, or the same type of claim is made many times.

Services Provided

- **Emergency Fuel Delivery:** Delivery of enough fuel for the vehicle to get to the nearest service station.
- **Lock-Out Service:** Service to unlock the vehicle if you are locked out. A remote unlock may be available if you have OnStar. For security reasons, the driver must present identification before this service is given.
- **Emergency Tow from a Public Road or Highway:** Tow to the nearest Chevrolet dealer for warranty service, or if the vehicle was in a crash and cannot be driven. Assistance is not given when the vehicle is stuck in the sand, mud, or snow.
- **Flat Tire Change:** Service to change a flat tire with the spare tire. The spare tire, if equipped, must be in good condition and properly inflated. It is the owner's responsibility for the repair or replacement of the tire if it is not covered by the warranty.
- **Battery Jump Start:** Service to jump start a dead battery.
- **Trip Interruption Benefits and Assistance:** If your trip is interrupted due to a warranty event, incidental expenses may be reimbursed within the Powertrain warranty period. Items considered are reasonable and customary hotel, meals, rental car, or a vehicle being delivered back to the customer, up to 500 miles.

Services Not Included in Roadside Assistance

- Impound towing caused by violation of any laws
- Legal fines
- Mounting, dismounting, or changing of snow tires, chains, or other traction devices

Service is not provided if a vehicle is in an area that is not accessible to the service vehicle or is not a regularly traveled or maintained public road, which includes ice and winter roads. Off-road use is not covered.

Services Specific to Canadian-Purchased Vehicles

- **Fuel Delivery:** Reimbursement is up to 7 liters. If available, diesel fuel delivery may be restricted. Propane and other fuels are not provided through this service.
- **Lock-Out Service:** Vehicle registration is required.
- **Trip Interruption Benefits and Assistance:** Must be over 150 km from where your trip was started to qualify. Pre-authorization, original detailed receipts, and a copy of the repair orders are required. Once authorization has been received, the Roadside Assistance advisor will help to make arrangements and explain how to receive payment.

- **Alternative Service:** If assistance cannot be provided right away, the Roadside Assistance advisor may give permission to get local emergency road service. You will receive payment, up to $100, after sending the original receipt to Roadside Assistance. Mechanical failures may be covered, however any cost for parts and labor for repairs not covered by the warranty are the owner responsibility.

Scheduling Service Appointments

When the vehicle requires warranty service, contact your dealer and request an appointment. By scheduling a service appointment and advising the service consultant of your transportation needs, your dealer can help minimize your inconvenience.

If the vehicle cannot be scheduled into the service department immediately, keep driving it until it can be scheduled for service, unless, of course, the problem is safety related. If it is, please call your dealership, let them know this, and ask for instructions.

If your dealer requests you to bring the vehicle for service, you are urged to do so as early in the work day as possible to allow for same-day repair.

Courtesy Transportation Program

To enhance your ownership experience, we and our participating dealers are proud to offer Courtesy Transportation, a customer support program for vehicles with the Bumper-to-Bumper (Base Warranty Coverage period in Canada), extended powertrain, and/or hybrid-specific warranties in both the U.S. and Canada.

The Courtesy Transportation program is no longer available for cutaway vehicles.

Several Courtesy Transportation options are available to assist in reducing inconvenience when warranty repairs are required.

Courtesy Transportation is not a part of the New Vehicle Limited Warranty. A separate booklet entitled “Limited Warranty and Owner Assistance Information” furnished with each new vehicle provides detailed warranty coverage information.

Transportation Options

Warranty service can generally be completed while you wait. However, if you are unable to do so, your dealer may offer the following transportation options:

Shuttle Service

This includes one-way or round-trip shuttle service within reasonable time and distance parameters of your dealer's area.

Public Transportation or Fuel Reimbursement

If overnight warranty repairs are needed, and public transportation is used, the expense must be supported by original receipts and within the maximum amount allowed by GM for shuttle service. If U.S. customers arrange their own transportation, limited reimbursement for reasonable fuel expenses may be available. Claim amounts should reflect actual costs and be supported by original receipts. See your dealer for information.

Courtesy Rental Vehicle

For an overnight warranty repair, the dealer may provide an available courtesy rental vehicle or provide for reimbursement of a rental vehicle. Reimbursement is limited and must be supported by original receipts as well as a signed and completed rental agreement and meet state/provincial, local, and rental vehicle provider requirements. Requirements vary and may include minimum age requirements, insurance coverage, credit card, etc. Additional fees such as fuel usage charges, taxes, levies, usage fees, excessive mileage, or rental usage beyond the completion of the repair are also your responsibility.

It may not be possible to provide a like vehicle as a courtesy rental.

Additional Program Information

All program options, such as shuttle service, may not be available at every dealer. Contact your dealer for specific availability.

General Motors reserves the right to unilaterally modify, change, or discontinue Courtesy Transportation at any time and to resolve all questions of claim eligibility pursuant to the terms and conditions described herein at its sole discretion.

Collision Damage Repair

If the vehicle is involved in a collision and it is damaged, have the damage repaired by a qualified technician using the proper equipment and quality replacement parts. Poorly performed collision repairs diminish the vehicle resale value, and safety performance can be compromised in subsequent collisions.

Collision Parts

Genuine GM Collision parts are new parts made with the same materials and construction methods as the parts with which the vehicle was originally built. Genuine GM Collision parts are the best choice to ensure that the vehicle's designed appearance, durability, and safety are preserved. The use of Genuine GM parts can help maintain the GM New Vehicle Limited Warranty.

Recycled original equipment parts may also be used for repair. These parts are typically removed from vehicles that were total losses in prior crashes. In most cases, the parts being recycled are from undamaged sections of the vehicle. A recycled original equipment GM part may be an acceptable choice to

maintain the vehicle's originally designed appearance and safety performance; however, the history of these parts is not known. Such parts are not covered by the GM New Vehicle Limited Warranty, and any related failures are not covered by that warranty.

Aftermarket collision parts are also available. These are made by companies other than GM and may not have been tested for the vehicle. As a result, these parts may fit poorly, exhibit premature durability/corrosion problems, and may not perform properly in subsequent collisions. Aftermarket parts are not covered by the GM New Vehicle Limited Warranty, and any vehicle failure related to such parts is not covered by that warranty.

Repair Facility

GM also recommends that you choose a collision repair facility that meets your needs before you ever need collision repairs. Your dealer may have a collision repair center with GM-trained technicians and state-of-the-art equipment, or be able to recommend a collision repair center that has GM-trained technicians and comparable equipment.

Insuring the Vehicle

Protect your investment in the GM vehicle with comprehensive and collision insurance coverage. There are significant differences in the quality of coverage afforded by various insurance policy terms. Many insurance policies provide reduced protection to the GM vehicle by limiting compensation for damage repairs through the use of aftermarket collision parts. Some insurance companies will not specify aftermarket collision parts. When purchasing insurance, we recommend that you ensure that the vehicle will be repaired with GM original equipment collision parts. If such insurance coverage is not available from your current insurance carrier, consider switching to another insurance carrier.

If the vehicle is leased, the leasing company may require you to have insurance that ensures repairs with Genuine GM Original Equipment Manufacturer (OEM) parts or Genuine Manufacturer replacement parts. Read the lease carefully, as you may be charged at the end of the lease for poor quality repairs.

If a Crash Occurs

If there has been an injury, call emergency services for help. Do not leave the scene of a crash until all matters have been taken care of. Move the vehicle only if its position puts you in danger, or you are instructed to move it by a police officer.

Give only the necessary information to police and other parties involved in the crash.

For emergency towing see *Roadside Assistance Program* ⇨ *322*.

Gather the following information:

- Driver name, address, and telephone number

- Driver license number
- Owner name, address, and telephone number
- Vehicle license plate number
- Vehicle make, model, and model year
- Vehicle Identification Number (VIN)
- Insurance company and policy number
- General description of the damage to the other vehicle

Choose a reputable repair facility that uses quality replacement parts. See “Collision Parts” earlier in this section.

If the airbag has inflated, see *What Will You See after an Airbag Inflates?* ⇨ *62*.

Managing the Vehicle Damage Repair Process

In the event that the vehicle requires damage repairs, GM recommends that you take an active role in its repair. If you have a pre-determined repair facility of choice, take the vehicle there, or have it towed there. Specify to the facility that any required replacement collision parts be original equipment parts, either new Genuine GM parts or recycled original GM parts. Remember, recycled parts will not be covered by the GM vehicle warranty.

Insurance pays the bill for the repair, but you must live with the repair. Depending on your policy limits, your insurance company may initially value the repair using aftermarket parts. Discuss this with the repair professional, and insist on Genuine GM parts. Remember, if the vehicle is leased, you may be obligated to have the vehicle repaired with Genuine GM parts, even if your insurance coverage does not pay the full cost.

If another party's insurance company is paying for the repairs, you are not obligated to accept a repair valuation based on that insurance company's collision policy repair limits, as you have no contractual limits with that company. In such cases, you can have control of the repair and parts choices as long as the cost stays within reasonable limits.

Service Publications Ordering Information

Service Manuals

Service Manuals have the diagnosis and repair information on the engines, transmission, axle, suspension, brakes, electrical, steering, body, etc.

Owner Information

Owner publications are written specifically for owners and intended to provide basic operational information about the vehicle. The Owner’s Manual includes the Maintenance Schedule for all models.

In-Portfolio: Includes a Portfolio, Owner’s Manual, and Warranty Manual.

RETAIL SELL PRICE: $35.00 – $40.00 (U.S.) plus handling and shipping fees.

Without Pouch: Owner's Manual only.

RETAIL SELL PRICE: $25.00 (U.S.) plus handling and shipping fees.

Current and Past Models

Service and Owner publications are available for many current and past model year GM vehicles.

ORDER TOLL FREE:
1-800-551-4123 Monday – Friday 8:00 AM – 6:00 PM Eastern Time

For Credit Card Orders Only (VISA-MasterCard-Discover), see Helm, Inc. at: www.helminc.com.

Or write to:

Helm, Incorporated
Attention: Customer Service
47911 Halyard Drive
Plymouth, MI 48170

Prices are subject to change without notice and without incurring obligation. Allow ample time for delivery.

All listed prices are quoted in U.S. funds. Make checks payable in U.S. funds.

Radio Frequency Statement

This vehicle has systems that operate on a radio frequency that complies with Part 15/Part 18 of the Federal Communications Commission (FCC) rules and with Innovation, Science and Economic Development (ISED) Canada's RSP-100 / license-exempt RSS's / ICES-001.

Operation is subject to the following two conditions:

1. The device may not cause harmful interference.
2. The device must accept any interference received, including interference that may cause undesired operation of the device.

Changes or modifications to any of these systems by other than an authorized service facility could void authorization to use this equipment.

Reporting Safety Defects

Reporting Safety Defects to the United States Government

If you believe that your vehicle has a defect which could cause a crash or could cause injury or death, you should immediately inform the National Highway Traffic Safety Administration (NHTSA) in addition to notifying General Motors.

If NHTSA receives similar complaints, it may open an investigation, and if it finds that a safety defect exists in a group of vehicles, it may order a recall and remedy campaign. However, NHTSA cannot become involved in individual problems between you, your dealer, or General Motors.

To contact NHTSA, you may call the Vehicle Safety Hotline toll-free at 1-888-327-4236 (TTY: 1-800-424-9153); go to *http://www.safercar.gov;* or write to:

Administrator, NHTSA
1200 New Jersey Avenue, S.E.
Washington, D.C. 20590

You can also obtain other information about motor vehicle safety from *http://www.safercar.gov*.

Reporting Safety Defects to the Canadian Government

If you live in Canada, and you believe that the vehicle has a safety defect, notify Transport Canada immediately, and notify General Motors of Canada Company. Call Transport Canada at 1-800-333-0510; go to:

www.tc.gc.ca/recalls (English)

www.tc.gc.ca/rappels (French)

or write to:

Transport Canada
Motor Vehicle Safety Directorate
Defect Investigations and Recalls Division
80 Noel Street
Gatineau, QC J8Z 0A1

Reporting Safety Defects to General Motors

In addition to notifying NHTSA (or Transport Canada) in a situation like this, notify General Motors.

Call 1-800-222-1020, or write:

Chevrolet Motor Division
Chevrolet Customer Assistance Center
P.O. Box 33170
Detroit, MI 48232-5170

In Canada, call 1-800-263-3777 (English) or 1-800-263-7854 (French), or write:

General Motors of Canada Company
Customer Care Centre, Mail Code: CA1-163-005
1908 Colonel Sam Drive
Oshawa, Ontario L1H 8P7

In Mexico, call 01-800-466-0811.

In other Central America and Caribbean Countries, call 52-722-236-0680.

Vehicle Data Recording and Privacy

The vehicle has a number of computers that record information about the vehicle's performance and how it is driven. For example, the vehicle uses computer modules to monitor and control engine and transmission performance, to monitor the conditions for airbag deployment and deploy them in a crash, and, if equipped, to provide antilock braking to help the driver control the vehicle. These modules may store data to help the dealer technician service the vehicle. Some modules may also store data about how the vehicle is operated, such as rate of fuel consumption or average speed. These modules may retain personal preferences, such as radio presets, seat positions, and temperature settings.

Event Data Recorders

This vehicle is equipped with an event data recorder (EDR). The main purpose of an EDR is to record, in certain crash or near crash-like situations, such as an air bag deployment or hitting a road obstacle, data that will assist in understanding how a vehicle's systems performed. The EDR is designed to record data related to vehicle dynamics and safety systems for a short period of time, typically 30 seconds or less. The EDR in this vehicle is designed to record such data as:

- How various systems in your vehicle were operating;
- Whether or not the driver and passenger safety belts were buckled/fastened;
- How far (if at all) the driver was depressing the accelerator and/or brake pedal; and,
- How fast the vehicle was traveling.

These data can help provide a better understanding of the circumstances in which crashes and injuries occur.

Note

EDR data are recorded by your vehicle only if a non-trivial crash situation occurs; no data are recorded by the EDR under normal driving conditions and no personal data (e.g., name, gender, age, and crash location) are recorded. However, other parties, such as law enforcement, could combine the EDR data with the type of personally identifying data routinely acquired during a crash investigation.

To read data recorded by an EDR, special equipment is required, and access to the vehicle or the EDR is needed. In addition to the vehicle manufacturer, other parties, such as law enforcement, that have the special equipment, can read the information if they have access to the vehicle or the EDR.

GM will not access these data or share it with others except: with the consent of the vehicle owner or, if the vehicle is leased, with the consent of the lessee; in response to an official request by police or similar government office; as part of GM's defense of litigation through the discovery process; or, as required by law. Data that GM collects or receives may also be used for GM research needs or may be made available to others for research purposes, where a need is shown and the data is not tied to a specific vehicle or vehicle owner.

OnStar

If the vehicle is equipped with OnStar and has an active service plan, additional data may be collected through the OnStar system. This includes information about the vehicle's operation; collisions involving the vehicle; the use of the vehicle and its features; and, in certain situations, the location and approximate GPS speed of the vehicle. Refer to the OnStar Terms and Conditions and Privacy Statement on the OnStar website.

See *OnStar Additional Information* ⇨ *338*.

Infotainment System

If the vehicle is equipped with a navigation system as part of the infotainment system, use of the system may result in the storage of destinations, addresses, telephone numbers, and other trip information. See the infotainment manual for information on stored data and for deletion instructions.

OnStar

OnStar Overview
OnStar Overview 332

OnStar Services
Emergency 333
Security 334
Navigation 334
Connections 335
Diagnostics 337

OnStar Additional Information
OnStar Additional Information 338

OnStar Overview

Voice Command Button

Blue OnStar Button

Red Emergency Button

This vehicle may be equipped with a comprehensive, in-vehicle system that can connect to an OnStar Advisor for Emergency, Security, Navigation, Connections, and Diagnostics Services. OnStar services may require a paid service plan and data plan. OnStar requires the vehicle battery and electrical system, cellular service, and GPS satellite signals to be available and operating. OnStar acts as a link to existing emergency service providers. OnStar may collect information about you and your vehicle, including location information. See OnStar User Terms, Privacy Statement, and Software Terms for more details including system limitations at www.onstar.com (U.S.) or www.onstar.ca (Canada).

The OnStar system status light is next to the OnStar buttons. If the status light is:

- Solid Green: System is ready.
- Flashing Green: On a call.
- Red: Indicates a problem.
- Off: System is off. Press twice to speak with an OnStar Advisor.

Press or call 1-888-4ONSTAR (1-888-466-7827) to speak to an Advisor.

Functionality of the Voice Command button may vary by vehicle and region.

Press to:

- Open the OnStar app on the infotainment display. See the infotainment manual for information on how to use the OnStar app.

Or

- Make a call, end a call, or answer an incoming call.
- Give OnStar Hands-Free Calling voice commands.
- Give OnStar Turn-by-Turn Navigation voice commands.
- Obtain and customize the Wi-Fi hotspot name or SSID and password, if equipped.

Press to connect to an Advisor to:

- Verify account information or update contact information.
- Get driving directions.
- Receive a Diagnostic check of the vehicle's key operating systems.
- Receive Roadside Assistance.
- Manage Wi-Fi Settings, if equipped.

Press SOS to get a priority connection to an OnStar Advisor available 24/7 to:

- Get help for an emergency.
- Be a Good Samaritan or respond to an AMBER Alert.
- Get assistance in severe weather or other crisis situations and find evacuation routes.

OnStar Services

Emergency

Emergency Services require an active, OnStar service plan (excludes Basic Plan). With Automatic Crash Response, built-in sensors can automatically alert a specially trained OnStar Advisor who is immediately connected in to the vehicle to help.

Press SOS for a priority connection to an OnStar Advisor who can contact emergency service providers, direct them to your exact location, and relay important information.

With OnStar Crisis Assist, specially trained Advisors are available 24 hours a day, 7 days a week, to provide a central point of contact, assistance, and information during a crisis.

With Roadside Assistance, Advisors can locate a nearby service provider to help with a flat tire, a battery jump, or an empty gas tank.

Security

If equipped, OnStar provides these services:

- With Stolen Vehicle Assistance, OnStar Advisors can use GPS to pinpoint the vehicle and help authorities quickly recover it.
- With Remote Ignition Block, if equipped, OnStar can block the engine from being restarted.
- With Stolen Vehicle Slowdown, if equipped, OnStar can work with law enforcement to gradually slow the vehicle down.

Theft Alarm Notification

If equipped, if the doors are locked and the vehicle alarm sounds, a notification by text, e-mail, or phone call will be sent. If the vehicle is stolen, an OnStar Advisor can work with authorities to recover the vehicle.

Navigation

OnStar navigation requires a specific OnStar service plan.

Press On to receive Turn-by-Turn directions or have them sent to the vehicle's navigation screen, if equipped.

Turn-by-Turn Navigation

1. Press On to connect to an Advisor.
2. Request directions to be downloaded to the vehicle.
3. Follow the voice-guided commands.

Using Voice Commands During a Planned Route

Functionality of the Voice Command button may vary by vehicle and region. For some vehicles, press to open the OnStar app on the infotainment display. For other vehicles press as follows.

Cancel Route

1. Press . System responds: "OnStar ready," then a tone.
2. Say "Cancel route." System responds: "Do you want to cancel directions?"
3. Say "Yes." System responds: "OK, request completed, thank you, goodbye."

Route Preview

1. Press . System responds: "OnStar ready," then a tone.
2. Say "Route preview." System responds with the next three maneuvers.

Repeat

1. Press . System responds: "OnStar ready," then a tone.
2. Say "Repeat." System responds with the last direction given, then responds with "OnStar ready," then a tone.

Get My Destination

1. Press . System responds: “OnStar ready,” then a tone.
2. Say “Get my destination.” System responds with the address and distance to the destination, then responds with “OnStar ready,” then a tone.

Send Destination to Vehicle

Directions can be sent to the vehicle’s navigation screen, if equipped.

Press , then ask the Advisor to download directions to the vehicle’s navigation system, if equipped. After the call ends, the navigation screen will provide prompts to begin driving directions. Routes that are sent to the navigation screen can only be canceled through the navigation system.

See www.onstar.com (U.S.) or www.onstar.ca (Canada).

Connections

The following OnStar services help with staying connected.

For coverage maps, see www.onstar.com (U.S.) or www.onstar.ca (Canada).

Ensuring Security

- Change the default passwords for the Wi-Fi hotspot and myChevrolet mobile application. Make these passwords different from each other and use a combination of letters, numbers, and symbols to increase the security.
- Change the default name of the SSID (Service Set Identifier). This is your network’s name that is visible to other wireless devices. Choose a unique name and avoid family names or vehicle descriptions.

OnStar Wi-Fi Hotspot (If Equipped)

The vehicle may have a built-in Wi-Fi hotspot that provides access to the Internet and web content at 4G LTE speed. Up to seven mobile devices can be connected. A data plan is required. Use the in-vehicle controls only when it is safe to do so.

1. To retrieve Wi-Fi hotspot information, press to open the OnStar app on the infotainment display, then select Wi-Fi Hotspot. On some vehicles, touch Wi-Fi or Wi-Fi Settings on the screen.
2. The Wi-Fi settings will display the Wi-Fi hotspot name (SSID), password, and on some vehicles, the connection type (no Internet connection, 3G, 4G, 4G LTE), and signal quality (poor, good, excellent).
3. To change the SSID or password, press or call 1-888-4ONSTAR to connect with an Advisor. On some vehicles, the SSID and password can be changed in the Wi-Fi Hotspot menu.

After initial set-up, your vehicle's Wi-Fi hotspot will connect automatically to your mobile devices. Manage data usage by turning Wi-Fi on or off on your mobile device, using the myChevrolet mobile app, or by contacting an OnStar Advisor. On some vehicles, Wi-Fi can also be managed from the Wi-Fi Hotspot menu.

MyChevrolet Mobile App (If Available)

Download the myChevrolet mobile app to compatible Apple and Android smartphones. Chevrolet users can access the following services from a smartphone:

- Remotely start/stop the vehicle, if factory-equipped.
- Lock/unlock doors, if equipped with automatic locks.
- Activate the horn and lamps.
- Check the vehicle's fuel level, oil life, or tire pressure, if factory-equipped with the Tire Pressure Monitor System.
- Send destinations to the vehicle.
- Locate the vehicle on a map (U.S. market only).
- Turn the vehicle's Wi-Fi hotspot on/off, manage settings, and monitor data consumption, if equipped.
- Locate a dealer and schedule service.
- Request roadside assistance.
- Set a parking reminder with pin drop, take a photo, make a note, and set a timer.
- Connect with Chevrolet on social media.

For myChevrolet mobile app information and compatibility, see www.my.chevrolet.com.

An active OnStar service, compatible device, factory-installed remote start, and power locks are required. Data rates apply. See www.onstar.com for details and system limitations.

Remote Services

Contact an OnStar Advisor to unlock the doors or sound the horn and flash the lamps.

OnStar AtYourService

OnStar Advisors can provide offers from restaurants and retailers on your route, help locate hotels, or book a room. These services vary by market.

OnStar Hands-Free Calling

Make and receive calls with the built-in wireless calling service, which requires available minutes. Functionality of the Voice Command button may vary by vehicle and region. For some vehicles, press to open the OnStar app on the infotainment display, then select Hands-Free calling. For other vehicles press as follows.

Make a Call

1. Press . System responds: "OnStar ready."

2. Say “Call.” System responds: “Call. Please say the name or number to call.”
3. Say the entire number without pausing, including a “1” and the area code. System responds: “OK, calling.”

Calling 911 Emergency

1. Press . System responds: “OnStar ready.”
2. Say “Call.” System responds: “Call. Please say the name or number to call.”
3. Say “911” without pausing. System responds: “911.”
4. Say “Call.” System responds: “OK, dialing 911.”

Retrieve My Number

1. Press . System responds: “OnStar ready.”
2. Say “My number.” System responds: “Your OnStar Hands-Free Calling number is,” then says the number.

End a Call

Press . System responds: “Call ended.”

Verify Minutes and Expiration

Press and say “Minutes” then “Verify” to check how many minutes remain and their expiration date.

Diagnostics

By monitoring and reporting on the vehicle’s key systems, OnStar Advanced Diagnostics provides a way to keep up on maintenance. Capabilities vary by model. See www.onstar.com for details and system limitations. Message and data rates may apply.

Advanced Diagnostics requires an active OnStar paid service plan, e-mail address on file, and enrollment in Advanced Diagnostics.

Includes:

- Diagnostic Alerts: Set preferences to receive real-time e-mails, texts, or monthly reports of the vehicle’s health. Or press to have an Advisor initiate a remote diagnostic report.
- Proactive Alerts: Receive a real-time e-mail or text message regarding potential issues with key vehicle components, such as the battery, fuel system, or starter system. Alerts for potential issues appear on the infotainment display. Proactive Alerts are designed to help predict specific types of issues based on information collected from the vehicle. Other factors may affect vehicle performance. Not all issues will deliver alerts. In some cases, a dealer service check may be required to confirm the accuracy of the alerts.

- Dealer Maintenance Notification: Have the vehicle notify your preferred dealer when it is time for maintenance. Your dealer will then contact you to set up an appointment.

To begin, press to speak to an Advisor, or see www.onstar.com.

OnStar Additional Information

OnStar Smart Driver

OnStar Smart Driver provides information about driving behavior to help maximize overall vehicle performance, reduce wear and tear, and enhance fuel efficiency. An Insurance Discounts Eligibility feature is also offered within OnStar Smart Driver. See www.onstar.com for details regarding vehicle eligibility and system limitations. OnStar, General Motors, and their affiliates are not insurance providers. Obtain insurance only from licensed insurance providers.

In-Vehicle Audio Messages

Audio messages may play important information at the following times:

- Prior to vehicle purchase. Press to set up an account.
- With the OnStar Basic Plan, every 60 days.
- After change in ownership and at 90 days.

Transferring Service

Press to request account transfer eligibility information. The Advisor can cancel or change account information.

Selling/Transferring the Vehicle

Call 1-888-4ONSTAR (1-888-466-7827) immediately to terminate your OnStar services if the vehicle is disposed of, sold, transferred, or if the lease ends.

Reactivation for Subsequent Owners

Press and follow the prompts to speak to an Advisor as soon as possible. The Advisor will update vehicle records and explain OnStar service options.

How OnStar Service Works

Automatic Crash Response, Emergency Services, Crisis Assist, Stolen Vehicle Assistance,

Advanced Vehicle Diagnostics, Remote Services, Roadside Assistance, Turn-by-Turn Navigation, and Hands-Free Calling are available on most vehicles. Not all OnStar services are available everywhere or on all vehicles. For more information, a full description of OnStar services, system limitations, and OnStar User Terms, Privacy Statement, and Software Terms:

- Call 1-888-4ONSTAR (1-888-466-7827).
- See www.onstar.com (U.S.).
- See www.onstar.ca (Canada).
- Call TTY 1-877-248-2080.
- Press On to speak with an Advisor.

OnStar services cannot work unless the vehicle is in a place where OnStar has an agreement with a wireless service provider for service in that area. The wireless service provider must also have coverage, network capacity, reception, and technology compatible with OnStar services. Service involving location information about the vehicle cannot work unless GPS signals are available, unobstructed, and compatible with the OnStar hardware. OnStar services may not work if the OnStar equipment is not properly installed or it has not been properly maintained. If equipment or software is added, connected, or modified, OnStar services may not work. Other problems beyond the control of OnStar — such as hills, tall buildings, tunnels, weather, electrical system design and architecture of the vehicle, damage to the vehicle in a crash, or wireless phone network congestion or jamming — may prevent service.

See *Radio Frequency Statement* ⇨ *328*.

Services for People with Disabilities

Advisors provide services to help with physical disabilities and medical conditions.

Press On to help:

- Locate a gas station with an attendant to pump gas.
- Find a hotel, restaurant, etc., that meets accessibility needs.
- Provide directions to the closest hospital or pharmacy in urgent situations.

TTY Users

OnStar has the ability to communicate to deaf, hard-of-hearing, or speech-impaired customers while in the vehicle. The available dealer-installed TTY system can provide in-vehicle access to all OnStar services, except Virtual Advisor and OnStar Turn-by-Turn Navigation.

OnStar Personal Identification Number (PIN)

A PIN is needed to access some OnStar services. The PIN will need to be changed the first time when speaking with an Advisor. To

change the OnStar PIN, contact an OnStar Advisor by pressing or calling 1-888-4ONSTAR.

Warranty

OnStar equipment may be warranted as part of the vehicle warranty.

Languages

The vehicle can be programmed to respond in multiple languages. Press and ask for an Advisor. Advisors are available in English, Spanish, and French. Available languages may vary by country.

Potential Issues

OnStar cannot perform Remote Door Unlock or Stolen Vehicle Assistance after the vehicle has been off continuously for 10 days without an ignition cycle. If the vehicle has not been started for 10 days, OnStar can contact Roadside Assistance or a locksmith to help gain access to the vehicle.

Global Positioning System (GPS)

- Obstruction of the GPS can occur in a large city with tall buildings; in parking garages; around airports; in tunnels and underpasses; or in an area with very dense trees. If GPS signals are not available, the OnStar system should still operate to call OnStar. However, OnStar could have difficulty identifying the exact location.
- In emergency situations, OnStar can use the last stored GPS location to send to emergency responders.

A temporary loss of GPS can cause loss of the ability to send a Turn-by-Turn Navigation route. The Advisor may give a verbal route or may ask for a call back after the vehicle is driven into an open area.

Cellular and GPS Antennas

Cellular reception is required for OnStar to send remote signals to the vehicle. Do not place items over or near the antenna to prevent blocking cellular and GPS signal reception.

Unable to Connect to OnStar Message

If there is limited cellular coverage or the cellular network has reached maximum capacity, this message may come on. Press to try the call again or try again after driving a few miles into another cellular area.

Vehicle and Power Issues

OnStar services require a vehicle electrical system, wireless service, and GPS satellite technologies to be available and operating for features to function properly. These systems may not operate if the battery is discharged or disconnected.

Add-on Electrical Equipment

The OnStar system is integrated into the electrical architecture of the vehicle. Do not add any electrical equipment. See *Add-On Electrical Equipment* ⇨ *212*. Added electrical

equipment may interfere with the operation of the OnStar system and cause it to not operate.

Vehicle Software Updates

OnStar or GM may remotely deliver software updates or changes to the vehicle without further notice or consent. These updates or changes may enhance or maintain safety, security, or the operation of the vehicle or the vehicle systems. Software updates or changes may affect or erase data or settings that are stored in the vehicle, such as OnStar Hands-Free Calling name tags, saved navigation destinations, or pre-set radio stations. Neither OnStar nor GM is responsible for any affected or erased data or settings. These updates or changes may also collect personal information. Such collection is described in the OnStar privacy statement or separately disclosed at the time of installation. These updates or changes may also cause a system to automatically communicate with GM servers to collect information about vehicle system status, identify whether updates or changes are available, or deliver updates or changes. An active OnStar agreement constitutes consent to these software updates or changes and agreement that either OnStar or GM may remotely deliver them to the vehicle.

Privacy

The complete OnStar Privacy Statement may be found at www.onstar.com (U.S.), or www.onstar.ca (Canada). We recommend that you review it. If you have any questions, call 1-888-4ONSTAR (1-888-466-7827) or press to speak with an Advisor. Users of wireless communications are cautioned that the privacy of any information sent via wireless cellular communications cannot be assured. Third parties may unlawfully intercept or access transmissions and private communications without consent.

OnStar - Software Acknowledgements

Certain OnStar components include libcurl and unzip software and other third party software. Below are the notices and licenses associated with libcurl and unzip and for other third party software please see http://opensource.lge.com/index

www.onstar.com/us/en/

libcurl:

COPYRIGHT AND PERMISSION NOTICE

Copyright (c) 1996 - 2010, Daniel Stenberg, <daniel@haxx.se>.

All rights reserved.

Permission to use, copy, modify, and distribute this software for any purpose with or without fee is hereby granted, provided that the above copyright notice and this permission notice appear in all copies.

THE SOFTWARE IS PROVIDED “AS IS,” WITHOUT WARRANTY OF ANY KIND, EXPRESS OR

IMPLIED, INCLUDING BUT NOT LIMITED TO THE WARRANTIES OF MERCHANTABILITY, FITNESS FOR A PARTICULAR PURPOSE AND NONINFRINGEMENT OF THIRD PARTY RIGHTS. IN NO EVENT SHALL THE AUTHORS OR COPYRIGHT HOLDERS BE LIABLE FOR ANY CLAIM, DAMAGES OR OTHER LIABILITY, WHETHER IN AN ACTION OF CONTRACT, TORT OR OTHERWISE, ARISING FROM, OUT OF OR IN CONNECTION WITH THE SOFTWARE OR THE USE OR OTHER DEALINGS IN THE SOFTWARE.

Except as contained in this notice, the name of a copyright holder shall not be used in advertising or otherwise to promote the sale, use or other dealings in this Software without prior written authorization of the copyright holder.

unzip:

This is version 2005-Feb-10 of the Info-ZIP copyright and license. The definitive version of this document should be available at ftp://ftp.info-zip.org/pub/infozip/license.html indefinitely.

Copyright (c) 1990-2005 Info-ZIP. All rights reserved.

For the purposes of this copyright and license, “Info-ZIP” is defined as the following set of individuals:

Mark Adler, John Bush, Karl Davis, Harald Denker, Jean-Michel Dubois, Jean-loup Gailly, Hunter Goatley, Ed Gordon, Ian Gorman, Chris Herborth, Dirk Haase, Greg Hartwig, Robert Heath, Jonathan Hudson, Paul Kienitz, David Kirschbaum, Johnny Lee, Onno van der Linden, Igor Mandrichenko, Steve P. Miller, Sergio Monesi, Keith Owens, George Petrov, Greg Roelofs, Kai Uwe Rommel, Steve Salisbury, Dave Smith, Steven M. Schweda, Christian Spieler, Cosmin Truta, Antoine Verheijen, Paul von Behren, Rich Wales, Mike White.

This software is provided “as is,” without warranty of any kind, express or implied. In no event shall Info-ZIP or its contributors be held liable for any direct, indirect, incidental, special or consequential damages arising out of the use of or inability to use this software.

Permission is granted to anyone to use this software for any purpose, including commercial applications, and to alter it and redistribute it freely, subject to the following restrictions:

1. Redistributions of source code must retain the above copyright notice, definition, disclaimer, and this list of conditions.
2. Redistributions in binary form (compiled executables) must reproduce the above copyright notice, definition, disclaimer, and this list of conditions in documentation and/or other materials provided with the distribution. The sole exception to this condition is redistribution of a standard UnZipSFX binary (including SFXWiz) as part of a self-extracting archive; that is permitted without inclusion of this license, as long as the

normal SFX banner has not been removed from the binary or disabled.

3. Altered versions–including, but not limited to, ports to new operating systems, existing ports with new graphical interfaces, and dynamic, shared, or static library versions–must be plainly marked as such and must not be misrepresented as being the original source. Such altered versions also must not be misrepresented as being Info-ZIP releases–including, but not limited to, labeling of the altered versions with the names “Info-ZIP” (or any variation thereof, including, but not limited to, different capitalizations), “Pocket UnZip,” “WiZ” or “MacZip” without the explicit permission of Info-ZIP. Such altered versions are further prohibited from misrepresentative use of the Zip-Bugs or Info-ZIP e-mail addresses or of the Info-ZIP URL(s).

4. Info-ZIP retains the right to use the names “Info-ZIP,” “Zip,” “UnZip,” “UnZipSFX,” “WiZ,” “Pocket UnZip,” “Pocket Zip,” and “MacZip” for its own source and binary releases.

Index

A

Accessories and Modifications 215
Accessory Power 177
Add-On Electrical Equipment . . . 212
Additional Information
  OnStar 338
Additional Maintenance and Care 307
Air Cleaner/Filter, Engine 227
Air Conditioning 156, 158
Air Vents 161
Airbag System
  Check 67
  How Does an Airbag Restrain? 61
  What Makes an Airbag Inflate? 61
  What Will You See after an Airbag Inflates? 62
  When Should an Airbag Inflate? 60
  Where Are the Airbags? 58
Airbags
  Adding Equipment to the Vehicle 67
  Light On-Off 103
  On-Off Light 103
Airbags (cont'd)
  On-Off Switch 63
  Readiness Light 102
  Servicing Airbag-Equipped Vehicles 66
  System Check 56
Alert
  Side Blind Zone (SBZA) 195
All-Season Tires 256
All-Terrain Tires 256
AM-FM Radio 135
Antenna
  Multi-band 138
Antilock Brake System (ABS) . . . 186
  Warning Light 107
Appearance Care
  Exterior 292
  Interior 296
Ashtrays 97
Assistance Program, Roadside 322
Audio
  Theft-Deterrent Feature 130
Audio Players
  CD 138
Automatic
  Door Locks 31
  Headlamp System 124

Automatic (cont'd)
Transmission 182
Transmission Fluid 223, 226
Automatic Transmission
Manual Mode 185
Shift Lock Control Function
Check 241
Auxiliary
Devices 143
Avoiding Untrusted Media
Devices 138
Axle, Rear 239

B

Battery
Exterior Lighting Battery
Saver 127
Load Management 127
Power Protection 127
Battery - North America 238, 286
Blade Replacement, Wiper 242
Bluetooth
Overview 148
Brake
System Warning Light 107
Brakes 236
Antilock 186
Assist 188
Brakes (cont'd)
Fluid 237
Parking 187
Braking 164
Break-In, New Vehicle 173
Bulb Replacement
Center High-Mounted
Stoplamp (CHMSL) 246
Front Turn Signal,
Sidemarker, and Parking
Lamps 245
Halogen Bulbs 244
Headlamp Aiming 244
Headlamps 244
License Plate Lamps 247
Taillamps 245
Buying New Tires 271

C

Calibration 93
California
Fuel Requirements 198
Perchlorate Materials
Requirements 215
California
Proposition
65 Warning 214, 238, 286,
Back Cover
Camera
Rear Vision (RVC) 193
Canadian Vehicle Owners 2
Capacities and
Specifications 315
Carbon Monoxide
Engine Exhaust 181
Winter Driving 167
Cargo
Tie-Downs 88
Cargo Door Relocking 30
Caution, Danger, and Warning 2
CD Player 138
Center High-Mounted
Stoplamp (CHMSL) 246
Chains, Tire 276
Charging System Light 104
Check
Engine Light (Malfunction
Indicator) 105
Ignition Transmission Lock . . . 242
Child Restraints
Infants and Young Children 70
Lower Anchors and Tethers
for Children 75
Older Children 68
Securing 82, 84
Systems 72

Cigarette Lighter 96
Circuit Breakers 248
Cleaning
Exterior Care 292
Interior Care 296
Climate Control Systems 156
Air Conditioning 156
Heating 156
Rear 158
Rear Heating System 158
Clock 95
Cluster, Instrument 98
Collision Damage Repair 325
Compartments
Storage 88
Compass 93
Connections
OnStar 335
Control
Traction and Electronic
Stability 188
Control of a Vehicle 164
Convex Mirrors 36
Coolant
Engine Temperature Gauge . . 101
Cooling 156, 158
Cooling System 229
Courtesy Transportation
Program 324
Cruise Control 191
Light 110
Customer Assistance 321
Offices 320
Text Telephone (TTY)
Users 321
Customer Information
Service Publications
Ordering Information 327
Customer Satisfaction
Procedure 318

D

Damage Repair, Collision 325
Danger, Warning, and Caution 2
Data Collection
Infotainment System 331
OnStar 331
Data Recorders, Event 330
Daytime Running
Lamps (DRL) 123
Defensive Driving 163
Delayed Locking 30
Devices
Auxiliary 143
Diagnostics
OnStar 337
Distracted Driving 163
Dome Lamps 126
Door
Cargo Door Relocking 30
Delayed Locking 30
Locks 29
Power Locks 30
Rear Doors 33
Side 32
Sliding 33
Drive Belt Routing, Engine 317
Driver Information
Center (DIC) 111
Driving
Characteristics and
Towing Tips 202
Defensive 163
Drunk 164
For Better Fuel Economy 23
Hill and Mountain Roads 167
If the Vehicle is Stuck 169
Loss of Control 165
Off-Road Recovery 165
Vehicle Load Limits 169

Driving (cont'd)
Wet Roads 166
Winter 167
Dual Tire
Rotation 270

E

E85 or FlexFuel 199
Electrical Equipment,
Add-On 212
Electrical System
Engine Compartment Fuse
Block 248
Floor Console Fuse Block 253
Fuses and Circuit Breakers . . . 248
Overload 248
Emergency
OnStar 333
Engine
Air Cleaner/Filter 227
Check Light (Malfunction
Indicator) 105
Compartment Overview 217
Coolant Heater 177
Coolant Temperature
Gauge 101
Cooling System 229
Engine (cont'd)
Drive Belt Routing 317
Exhaust 181
Fan 234
Oil Life System 222
Oil Pressure Gauge 100
Oil Pressure Light 109
Overheating 233
Power Messages 116
Running While Parked 181
Starting 175
Enhanced Technology Glass 40
Entry/Exit Lighting 127
Equipment, Towing 209
Event Data Recorders 330
Extender, Seat Belt 55
Exterior Lamp Controls 122
Exterior Lamps Off Reminder . . . 123
Exterior Lighting Battery
Saver 127

F

Fan
Engine 234
Fast Idle System 176
Filter,
Engine Air Cleaner 227
Flash-to-Pass 123
Flashers, Hazard Warning 125
Flat Tire 276
Changing 278
FlexFuel
E85 199
Floor Mats 300
Fluid
Automatic
Transmission 223, 226
Brakes 237
Power Steering 235
Washer 235
Folding Mirrors 37
Frequency Statement
Radio 328
Front Seats
Adjustment 42
Front Storage 88
Front Turn Signal
Bulb Replacement 245
Fuel 197
Additives 198
Economy Driving 23
Filling a Portable Fuel
Container 201

Fuel (cont'd)
Filling the Tank 200
Foreign Countries 198
Gauge 99
Low Fuel Warning Light 110
Requirements, California 198
Full-Size Spare Tire 285
Fuses
Engine Compartment Fuse Block 248
Floor Console Fuse Block 253
Fuses and Circuit Breakers ... 248

G

Gas Strut(s) 243
Gauges
Engine Coolant Temperature 101
Engine Oil Pressure 100
Fuel 99
Odometer 99
Speedometer 99
Trip Odometer 99
Voltmeter 102
Warning Lights and Indicators 97
General Information
Service and Maintenance 301
General Information (cont'd)
Towing 202
Vehicle Care 214
Glass, Enhanced Technology 40
GM Mobility Reimbursement Program 322

H

Halogen Bulbs 244
Hazard Warning Flashers 125
Head Restraints 42
Headlamps
Aiming 244
Automatic 124
Bulb Replacement 244
Daytime Running Lamps (DRL) 123
Flash-to-Pass 123
High-Beam On Light 110
High/Low Beam Changer 123
Heated Mirrors 37
Heater
Engine Coolant 177
Heating 156, 158
High-Beam On Light 110
Hill and Mountain Roads 167
Hill Start Assist (HSA) 188
Hood 216
Horn 92
How to Wear Seat Belts Properly 48
HVAC 156, 158

I

Idle System
Fast 176
Ignition Positions 174
Ignition Transmission Lock Check 242
Immobilizer 34
Infants and Young Children, Restraints 70
Infotainment 129
Infotainment System 331
Instrument Cluster 98
Interior Rearview Mirrors 37
Introduction 2

J

Jump Starting - North America 286

K

Keyless Entry
Remote (RKE) System 26
Keys 24

L

Labeling, Tire Sidewall 257
Lamps
  Daytime Running (DRL) 123
  Dome 126
  Exterior Controls 122
  Exterior Lamps Off Reminder 123
  Exterior Lighting Battery Saver 127
  License Plate 247
  Malfunction Indicator (Check Engine) 105
  Reading 126
  Taillamps 245
Lamps, Bulb Replacement 245
Lap-Shoulder Belt 49
LATCH System
  Replacing Parts after a Crash 81
LATCH, Lower Anchors and Tethers for Children 75
Lighter, Cigarette 96
Lighting
  Entry/Exit 127
  Illumination Control 126
Lights
  Airbag On-Off 103
Lights (cont'd)
  Airbag Readiness 102
  Antilock Brake System (ABS) Warning 107
  Brake System Warning 107
  Charging System 104
  Check Engine (Malfunction Indicator) 105
  Cruise Control 110
  Engine Oil Pressure 109
  Flash-to-Pass 123
  High-Beam On 110
  High/Low Beam Changer 123
  Low Fuel Warning 110
  Seat Belt Reminders 102
  Security 110
  StabiliTrak OFF 108
  Tire Pressure 109
  Tow/Haul Mode 108
  Traction Control System (TCS)/StabiliTrak 108
Locking Rear Axle 190
Locks
  Automatic Door 31
  Cargo Door Relocking 30
  Delayed Locking 30
  Door 29
  Lockout Protection 31
Locks (cont'd)
  Power Door 30
  Safety 31
Loss of Control 165
Low Fuel Warning Light 110
Lower Anchors and Tethers for Children (LATCH System) 75

M

Maintenance
  Records 313
Maintenance and Care
  Additional 307
Maintenance Schedule 303
  Recommended Fluids and Lubricants 310
Malfunction Indicator Lamp 105
Manual Mirrors 36
Manual Mode 185
Manual Windows 38
Media
  Avoiding Untrusted Devices . . 138
Messages
  Engine Power 116
  Vehicle 115
  Vehicle Speed 116

Mirrors
Convex 36
Folding 37
Heated 37
Manual 36
Manual Rearview 37
Power 36
Trailer Tow 36
Mirrors, Interior Rearview 37
Monitor System, Tire
Pressure 264
Multi-band Antenna 138

N

Navigation
OnStar 334
New Vehicle Break-In 173
Noise Control System 240

O

Odometer 99
Trip 99
Off-Road
Recovery 165
Oil
Engine 220
Engine Oil Life System 222
Engine Oil Pressure Gauge ... 100
Oil (cont'd)
Pressure Light 109
Older Children, Restraints 68
Online Owner Center 321
OnStar 331
OnStar Additional
Information 338
OnStar Connections 335
OnStar Diagnostics 337
OnStar Emergency 333
OnStar Navigation 334
OnStar Overview 332
OnStar Security 334
OnStar System 148
Operation
Infotainment System 133
Ordering
Service Publications 327
Outlets
Power 95
Overheating, Engine 233
Overview 130, 132

P

Park
Shifting Into 179
Shifting Out of 180
Parking
Brake 187
Brake and P (Park)
Mechanism Check 242
Over Things That Burn 180
Parking Assist 194
Perchlorate Materials
Requirements, California 215
Personalization
Vehicle 116
Phone
Bluetooth 148
Power
Door Locks 30
Mirrors 36
Outlets 95
Protection, Battery 127
Retained Accessory (RAP) ... 177
Seat Adjustment 42
Steering Fluid 235
Windows 38
Pregnancy, Using Seat Belts 54
Privacy
Vehicle Data Recording 330
Program
Courtesy Transportation 324

Proposition
65 Warning,
California . . . . . 214, 238, 286, Back Cover

R

Radio Frequency Statement 328
Radio Reception 137
Radios
AM-FM Radio 135
Satellite 136
Reading Lamps 126
Rear Axle 239
Locking 190
Rear Climate Control System . . . 158
Rear Doors 33
Rear Heating System 158
Rear Seats 44
Rear Vision Camera (RVC) 193
Rear Windows 40
Rearview Mirrors 37
Reclining Seatbacks 43
Recommended Fluids and
Lubricants 310
Records
Maintenance 313
Recreational Vehicle Towing 290
Reimbursement Program,
GM Mobility 322
Remote Keyless Entry (RKE)
System 26
Remote Vehicle Start 28
Replacement Parts
Airbags 67
Maintenance 312
Replacing Airbag System 67
Replacing LATCH System
Parts after a Crash 81
Replacing Seat Belt System
Parts after a Crash 55
Reporting Safety Defects
Canadian Government 329
General Motors 329
U.S. Government 329
Restraints
Where to Put 74
Retained Accessory
Power (RAP) 177
Roads
Driving, Wet 166
Roadside Assistance
Program 322
Rotation, Tires 268
Routing, Engine Drive Belt 317
Running the Vehicle While
Parked 181

S

Safety Defects Reporting
Canadian Government 329
General Motors 329
U.S. Government 329
Safety Locks 31
Safety System Check 55
Satellite Radio 136
Scheduling Appointments 324
Seat Belts 47
Care 55
Extender 55
How to Wear Seat Belts
Properly 48
Lap-Shoulder Belt 49
Reminders 102
Replacing after a Crash 55
Use During Pregnancy 54
Seats
Adjustment, Front 42
Head Restraints 42
Power Adjustment, Front 42
Rear 44

Seats (cont'd)
Reclining Seatbacks 43
Securing Child Restraints 82, 84
Security
Light 110
OnStar 334
Vehicle 34
Service 161
Accessories and Modifications 215
Climate Control System 156
Doing Your Own Work 215
Maintenance Records 313
Maintenance, General Information 301
Parts Identification Label 314
Publications Ordering Information 327
Scheduling Appointments 324
Services
Special Application 307
Servicing the Airbag 66
Shift Lock Control Function
Check, Automatic Transmission 241
Shifting
Into Park 179
Out of Park 180
Side Blind Zone Alert (SBZA) . . . 195
Side Door 32
Sidemarker
Bulb Replacement 245
Signals, Turn and Lane-Change 125
Sliding Door 33
Special Application Services 307
Specifications and Capacities 315
Speedometer 99
StabiliTrak
OFF Light 108
Start Assist, Hill 188
Start Vehicle, Remote 28
Starter Switch Check 241
Starting the Engine 175
Steering 164
Fluid, Power 235
Wheel Adjustment 91
Wheel Controls 91
Storage Areas
Front 88
Storage Compartments 88
Struts
Gas 243
Stuck Vehicle 169
Sun Visors 40
Swing-out Windows 39
Switches
Airbag On-Off 63
Symbols 3
System
Infotainment 129, 331
Noise Control 240

T

Taillamps 245
Text Telephone (TTY) Users 321
Theft-Deterrent Systems 34
Immobilizer 34
Time 95
Tires 255
All-Season 256
All-Terrain 256
Buying New Tires 271
Chains 276
Changing 278
Designations 259
Different Size 273
Dual Rotation 270
Full-Size Spare 285
If a Tire Goes Flat 276
Inspection 268
Pressure 263
Pressure Light 109

Tires (cont'd)
Pressure Monitor Operation .. 265
Pressure Monitor System 264
Rotation 268
Sidewall Labeling 257
Terminology and Definitions .. 260
Uniform Tire Quality Grading 273
Wheel Alignment and Tire Balance 275
Wheel Replacement 275
When It Is Time for New Tires 270
Winter 256
Tow/Haul Mode 185
Tow/Haul Mode Light 108
Towing
Driving Characteristics 202
Equipment 209
General Information 202
Recreational Vehicle 290
Trailer 205
Trailer Sway Control (TSC) 211
Vehicle 289
Traction
Control System (TCS)/ StabiliTrak Light 108
Traction Control/Electronic Stability Control 188
Trailer
Sway Control (TSC) 211
Tow Mirrors 36
Towing 205
Transmission
Automatic 182
Fluid, Automatic 223, 226
Transportation Program, Courtesy 324
Trip Odometer 99
Turn and Lane-Change Signals 125

U

Uniform Tire Quality Grading ...273
Using This Manual 2

V

Vehicle
Canadian Owners 2
Control 164
Identification Number (VIN) ... 314
Load Limits 169
Messages 115
Personalization 116
Remote Start 28
Security 34
Vehicle (cont'd)
Speed Messages 116
Towing 289
Vehicle Care
Tire Pressure 263
Vehicle Data Recording and Privacy 330
Ventilation, Air 161
Visors 40
Voltmeter Gauge 102

W

Warning
Brake System Light 107
Caution and Danger 2
Warning Lights, Gauges, and Indicators 97
Warnings
Hazard Flashers 125
Washer Fluid 235
Wheels
Alignment and Tire Balance .. 275
Different Size 273
Replacement 275
When It Is Time for New Tires 270
Where to Put the Restraint 74
Wi-Fi 335

Windows 38
Enhanced Technology Glass . . . 40
Manual 38
Power 38
Rear 40
Swing-out Windows 39
Windshield
Wiper/Washer 92
Winter
Driving 167
Winter Tires 256
Wiper Blade Replacement 242

WARNING

Operating, servicing and maintaining a passenger vehicle or off-road vehicle can expose you to chemicals including engine exhaust, carbon monoxide, phthalates, and lead, which are known to the State of California to cause cancer and birth defects or other reproductive harm. To minimize exposure, avoid breathing exhaust, do not idle engine except as necessary, service your vehicle in a well-ventilated area and wear gloves or wash your hands frequently when servicing your vehicle. For more information go to www.P65Warnings.ca.gov/passenger-vehicle.

U.S. Only

23380338 B