OPEL MOVANO

Owner's Manual

Contents

Introduction 2
In brief 6
Keys, doors and windows 20
Seats, restraints 40
Storage 67
Instruments and controls 75
Lighting 98
Climate control 106
Driving and operating 119
Vehicle care 158
Service and maintenance 201
Technical data 205
Customer information 229
Index 232

Introduction

Fuel	Designation			
Engine oil	Grade			
	Viscosity			
Tyre pressure		Tyre size	Front	Rear
	Summer tyres			
	Winter tyres			
Weights				
	Gross vehicle weight rating			
	- Kerb weight, basic model			
	= Loading			

Vehicle specific data

Please enter your vehicle's data on the previous page to keep it easily accessible. This information is available in the sections "Service and maintenance" and "Technical data" as well as on the identification plate.

Introduction

Your vehicle is a designed combination of advanced technology, safety, environmental friendliness and economy.

This Owner's Manual provides you with all the necessary information to enable you to drive your vehicle safely and efficiently.

Make sure your passengers are aware of the possible risk of accident and injury which may result from improper use of the vehicle.

You must always comply with the specific laws and regulations of the country that you are in. These laws may differ from the information in this Owner's Manual.

Disregarding the description given in this manual may affect your warranty.

When this Owner's Manual refers to a workshop visit, we recommend your Opel Service Partner.

All Opel Service Partners provide first-class service at reasonable prices. Experienced mechanics trained by Opel work according to specific Opel instructions.

The customer literature pack should always be kept ready to hand in the vehicle.

Using this manual

- This manual describes all options and features available for this model. **Certain descriptions, including those for display and menu functions, may not apply to your vehicle due to model variant, country specifications, special equipment or accessories.**
- The "In brief" section will give you an initial overview.
- The table of contents at the beginning of this manual and within each section shows where the information is located.
- The index will enable you to search for specific information.
- This Owner's Manual depicts left-hand drive vehicles. Operation is similar for right-hand drive vehicles.
- The Owner's Manual uses the factory engine designations. The corresponding sales designations can be found in the section "Technical data".
- Directional data, e.g. left or right, or front or back, always relate to the direction of travel.
- The vehicle display screens may not support your specific language.
- Display messages and interior labelling are written in **bold** letters.

Danger, Warnings and Cautions

⚠Danger

Text marked ⚠**Danger** provides information on risk of fatal injury. Disregarding this information may endanger life.

⚠Warning

Text marked ⚠**Warning** provides information on risk of accident or injury. Disregarding this information may lead to injury.

Caution

Text marked **Caution** provides information on possible damage to the vehicle. Disregarding this information may lead to vehicle damage.

Symbols

Page references are indicated with ⇨. ⇨ means "see page".

Page references and index entries refer to the indented headings given in the section table of content.

We wish you many hours of pleasurable driving.

Adam Opel AG

In brief

Initial drive information

Vehicle unlocking

Unlocking with key

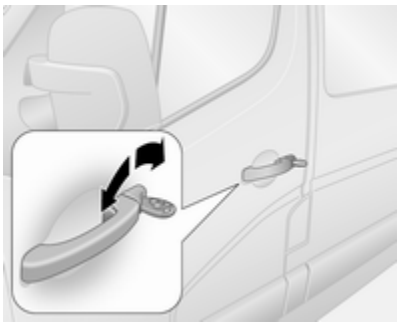

Turn the key in the driver's door lock. Open the doors by pulling the handles.

Unlocking with remote control

Depending on vehicle configuration:

Press 🔓 to unlock the front doors. Press again to unlock entire vehicle.

Open the doors by pulling the handles.

With 3-button remote control, press 🚗; only the load compartment is unlocked.

Radio remote control ⇨ 21, Central locking system ⇨ 22, Anti-theft alarm system ⇨ 32.

Seat adjustment

Longitudinal adjustment

Pull handle, slide seat, release handle.

Try to move the seat back and forth to ensure that the seat is locked in place.

Seat position ⇨ 41, Seat adjustment ⇨ 42.

Backrests inclination

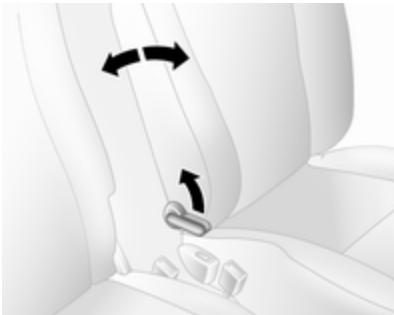

Pull lever, adjust inclination and release lever. Allow the seat to engage audibly.

Seat position ⇨ 41, Seat adjustment ⇨ 42.

Seat height

Lever motion

up : seat higher
down : seat lower

Seat position ⇨ 41, Seat adjustment ⇨ 42.

Head restraint adjustment

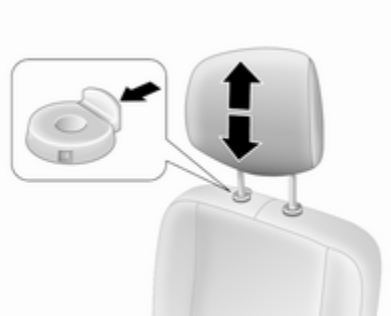

Press release catch, adjust height, engage.

Head restraints ⇨ 40.

Seat belt

Pull out the seat belt and fasten in belt buckle. The seat belt must not be twisted and must fit close against the body. The backrest must not be tilted back too far (maximum approx. 25 °).

To unfasten belt, press red button on belt buckle.

Seat position ⇨ 41, Seat belts ⇨ 49, Airbag system ⇨ 52.

Mirror adjustment

Interior mirror

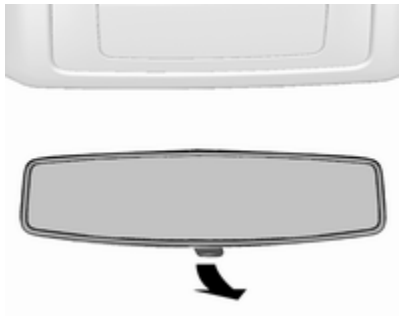

To reduce dazzle, adjust the lever on the underside of the mirror housing.

Interior mirror, Wide view mirror ⇨ 36.

Exterior mirrors

Manual adjustment

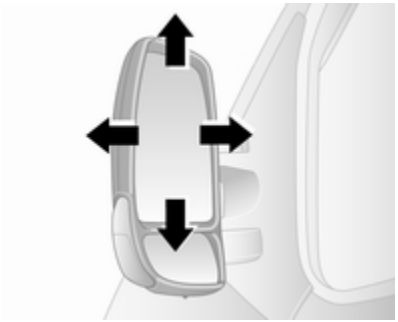

Swivel mirror in required direction.

Exterior mirrors ⇨ 34.

Electric adjustment

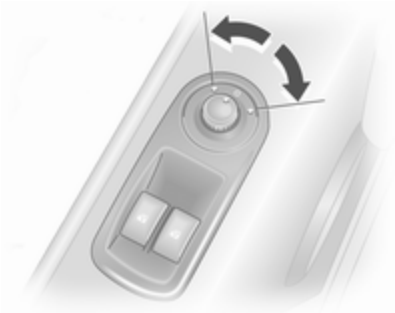

Select the relevant exterior mirror and adjust it.

Convex exterior mirrors ⇨ 34, Electric adjustment ⇨ 34, Folding exterior mirrors ⇨ 35, Heated exterior mirrors ⇨ 35.

Steering wheel adjustment

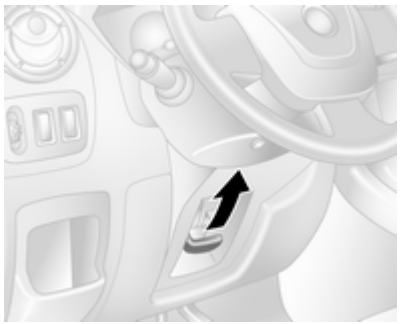

Unlock lever, adjust steering wheel, then engage lever and ensure it is fully locked.

Do not adjust steering wheel unless vehicle is stationary and steering wheel lock has been released.

Airbag system ⇨ 52, Ignition positions ⇨ 121.

Instrument panel overview

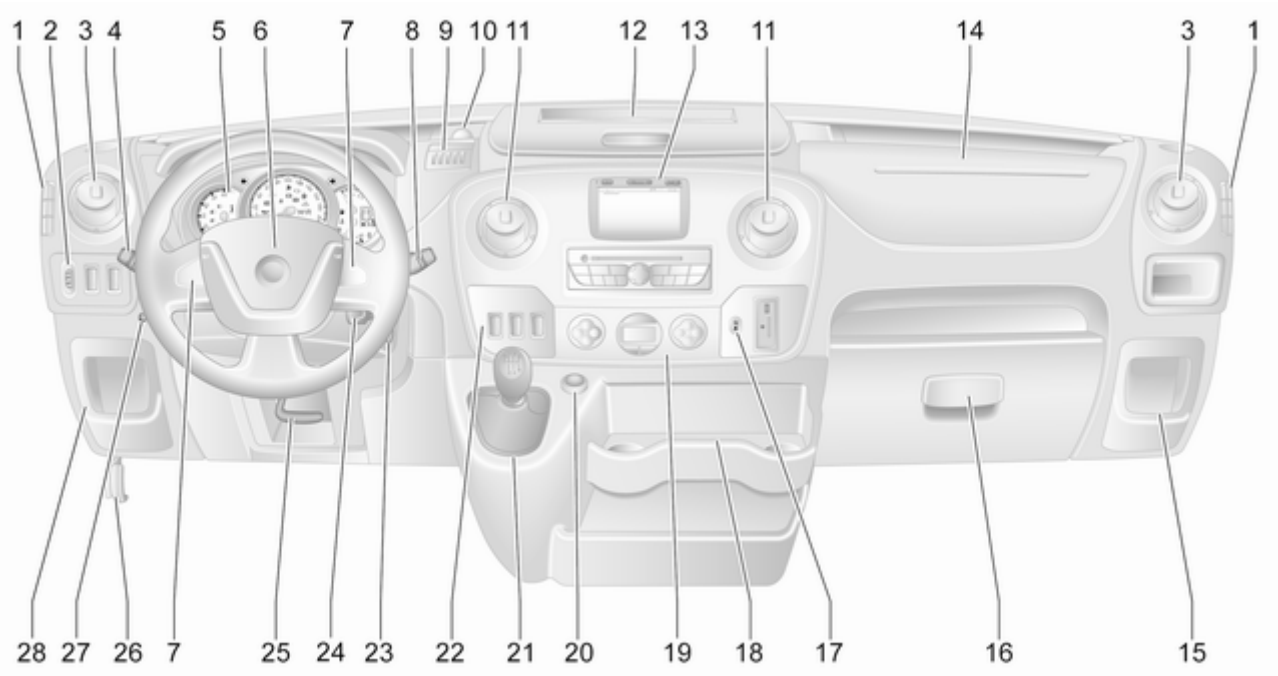

1 Fixed air vents 117
2 Headlight range adjustment 100
Ultrasonic parking assist 147
Traction control system 141
Electronic Stability Program 142
3 Side air vents 116
4 Light switch 98
Turn and lane-change signals 101
High beam and low beam, headlight flash 99
Sidelights 98
Automatic light control 98
Exit lighting 104
Front fog lights 101
Rear fog light 102
High beam assist 99
5 Instruments 80
Transmission display 83
Driver Information Centre (DIC) 93
6 Horn 76
Driver airbag 55
7 Remote control on steering wheel 76
Cruise control 143
8 Windscreen wiper, windscreen washer system .. 77
Trip computer 95
9 Coin tray 67
10 Power outlet, USB slot 79
11 Centre air vents 116
12 Storage compartment 67
13 Info-display 93
14 Front passenger airbag 55
15 Storage compartment 67
16 Glovebox 68
17 Seat belt reminder 87
Front passenger airbag deactivation 56
18 Cupholders 68
19 Climate control system 106
Electronic climate control system 108
20 Cigarette lighter 79
Power outlet 79
21 Gear lever, Manual transmission 134
Manual transmission automated 135
22 Cruise control and speed limiter 143
Manual transmission automated, Winter and Laden modes 137
Idle speed control 122
Stop-start system 123
ECO mode 120
23 Ignition switch with steering wheel lock 121
24 Steering column controls 76
25 Steering wheel adjustment . . 76
26 Bonnet release lever 160

27 Auxiliary heater 112
28 Storage compartment 67
Fuse box 177

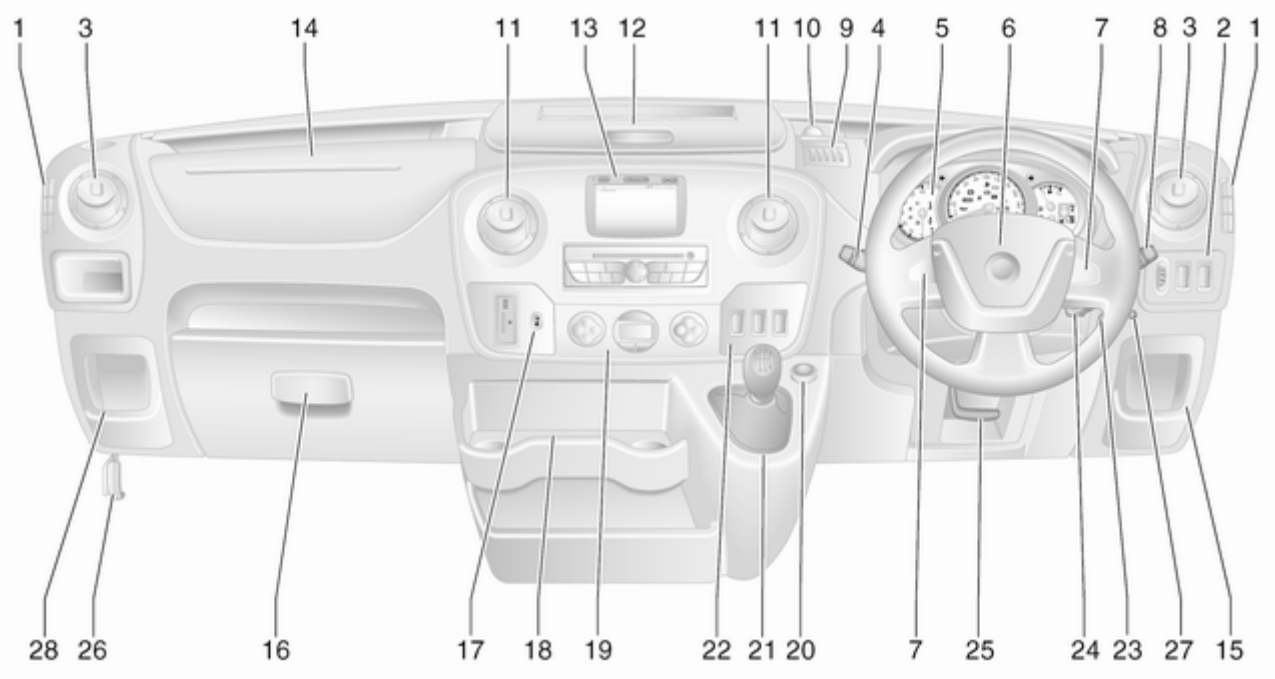
1
3
14
11
13
12
11
10
9
4
5
6
7
8
3
2
1
28
26
16
17
18
19
22
21
20
7
25
24
23
27
15

Exterior lighting

Turn outer light switch:

0 : off
☼ : sidelights
≣D ≣D : headlights
AUTO : automatic light control: headlights are switched on and off automatically.

Lighting ➪ 98, Automatic light control ➪ 98, Headlight warning device ➪ 94, Adaptive forward lighting ➪ 101.

Front and rear fog lights

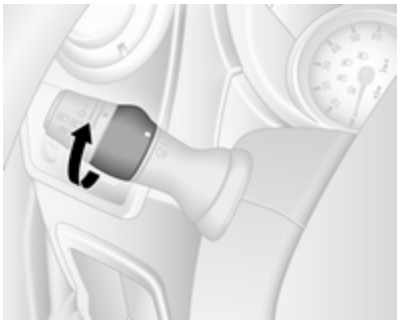

Turn inner light switch:

≠D : front fog lights
◐≠ : rear fog lights

Front and rear fog lights ➪ 101, ➪ 102.

Headlight flash, high beam and low beam

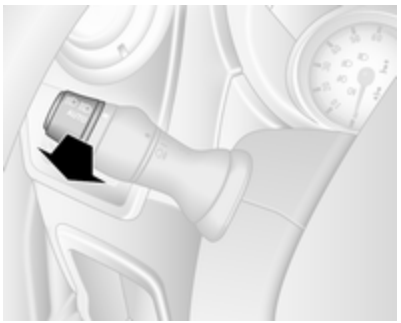

Pull lever.

High beam ➪ 99, Headlight flash ➪ 100.

Turn and lane-change signals

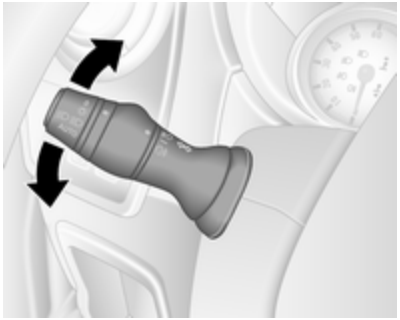

lever up : right turn signal
lever down : left turn signal

Turn and lane-change signals ⇨ 101.

Hazard warning flashers

Operated with the ⚠ button.

Hazard warning flashers ⇨ 101.

Horn

Press 📯.

Washer and wiper systems

Windscreen wiper

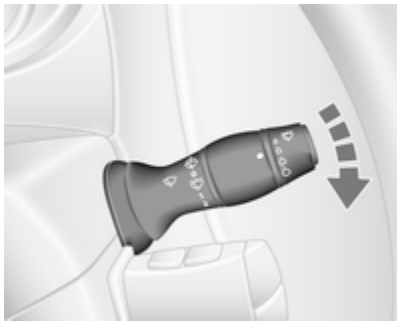

0 : off

/AUTO : timed interval wiping or automatic wiping with rain sensor

1 : slow

2 : fast

Windscreen wiper ⇨ 77, Wiper blade replacement ⇨ 167.

Windscreen washer

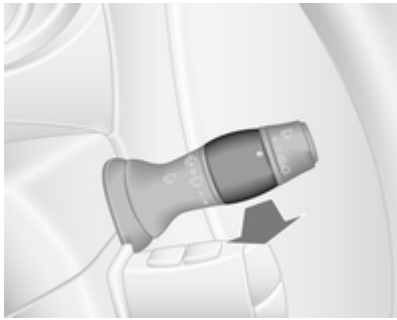

Pull lever.

short pull : wiper swipes once and washer fluid is sprayed onto the windscreen

long pull : wiper swipes for a few strokes and washer fluid is sprayed onto the windscreen

Windscreen washer ⇨ 77, Washer fluid ⇨ 164.

Climate control

Heated rear window

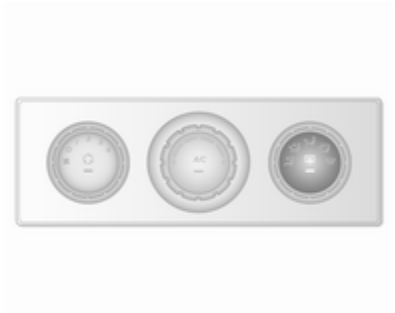

Heating is operated by pressing .

Heated rear window ⇨ 38.

Heated exterior mirrors

Pressing also activates the heated exterior mirrors.

Heated exterior mirrors ⇨ 35.

Demisting and defrosting the windows

Climate control system

- Set temperature control to warmest level.
- Set fan speed to highest level.
- Set air distribution control to .
- Switch on heated rear window .
- Switch cooling **A/C** on.
- Open side air vents as required and direct them towards door windows.

Climate control system ⇨ 106.

Electronic climate control system

Press .

Temperature and air distribution are set automatically and the fan runs at a high speed.

Electronic climate control system ⇨ 108.

Transmission

Manual transmission

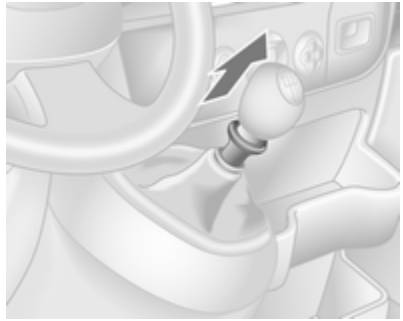

Reverse: with the vehicle stationary, depress clutch pedal and then pull up the collar on the selector lever and engage the gear.

If the gear does not engage, set the lever to neutral, release the clutch pedal and depress again; then repeat gear selection.

Manual transmission ⇨ 134.

Manual transmission automated

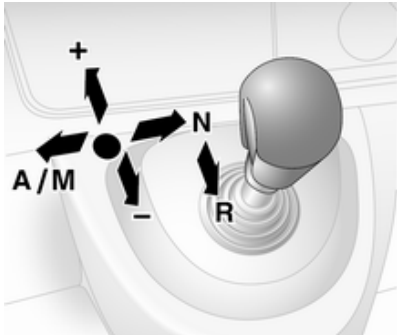

N : neutral
● : drive position
+ : higher gear
- : lower gear
A/M : switch between automatic and manual mode
R : reverse gear. Engage only when vehicle is stationary.

Manual transmission automated ⇨ 135.

Starting off

Check before starting off

- Tyre pressure and condition ⇨ 182, ⇨ 227.
- Engine oil level and fluid levels ⇨ 161.
- All windows, mirrors, exterior lighting and number plates are free from dirt, snow and ice and are operational.
- Proper position of mirrors, seats and seat belts ⇨ 34, ⇨ 41, ⇨ 50.
- Brake function at low speed, particularly if the brakes are wet.

Starting the engine

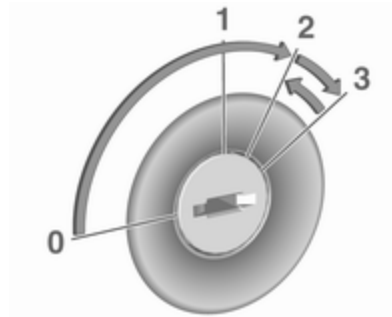

- Turn key to position **1**.
- Move the steering wheel slightly to release the steering wheel lock.
- Operate clutch and brake.
- Do not operate accelerator pedal.
- Turn the key to position **2** for preheating and wait until control indicator ⚯ extinguishes in the Driver Information Centre (DIC).
- Turn key to position **3** and release.

Starting the engine ⇨ 122.

Stop-start system

If the vehicle is at low speed or in standstill and certain conditions are fulfilled, activate an Autostop as follows:

- Depress the clutch pedal.
- Move the selector lever to **N**.
- Release the clutch pedal.

An Autostop is indicated when control indicator Ⓐ illuminates green in the instrument cluster.

To restart the engine, depress the clutch pedal again.

Stop-start system ⇨ 123.

Parking

⚠Warning

- Do not park the vehicle on an easily ignitable surface. The high temperature of the exhaust system could ignite the surface.
- Always apply parking brake without pressing release button. Apply as firmly as possible on a downhill slope or uphill slope. Depress brake pedal at the same time to reduce operating force.
- Switch off the engine.
- If the vehicle is on a level surface or uphill slope, engage first gear. On an uphill slope, turn the front wheels away from the kerb.

  If the vehicle is on a downhill slope, engage reverse gear. Turn the front wheels towards the kerb.
- Close the windows.
- Remove the ignition key from the ignition switch. Turn the steering wheel until the steering wheel lock is felt to engage.

- Lock the vehicle by pressing 🔒 on the remote control ⇨ 22.
- Activate the anti-theft alarm system ⇨ 32.
- The engine cooling fans may run after the engine has been switched off ⇨ 160.

Caution

After running at high engine speeds or with high engine loads, operate the engine briefly at a low load or run in neutral for approx. 30 seconds before switching off, in order to protect the turbocharger.

Keys, locks ⇨ 20, Laying the vehicle up for a long period of time ⇨ 159.

Keys, doors and windows

Keys, locks **20**
Keys 20
Car Pass 20
Radio remote control 21
Door locks 22
Manual door locks 22
Central locking system 22
Power door locks 25
Automatic locking 26
Child locks 26
Doors **27**
Sliding door 27
Rear doors 30
Vehicle security **32**
Anti-theft locking system 32
Anti-theft alarm system 32
Immobiliser 33
Exterior mirrors **34**
Convex shape 34
Manual adjustment 34
Electric adjustment 34
Folding mirrors 35
Heated mirrors 35
Interior mirrors **36**
Manual anti-dazzle 36
Windows **36**
Windscreen 36
Manual windows 36
Power windows 36
Rear windows 37
Heated rear window 38
Sun visors 38
Roof **39**
Glass panel 39

Keys, locks

Keys

Replacement keys

The key number is specified in the Car Pass or on a detachable tag.

The key number must be quoted when ordering replacement keys as it is a component of the immobiliser system.

Locks ⇨ 198.

Car Pass

The Car Pass contains security related vehicle data and should therefore be kept in a safe place.

When the vehicle is taken to a workshop, this vehicle data is needed in order to perform certain operations.

Radio remote control

Used to operate:

- central locking system
- anti-theft locking system
- anti-theft alarm system

Depending on model, the vehicle may use a 2-button or 3-button remote control.

The remote control has a range of approx. 5 metres. It can be affected by external influences. The hazard warning flashers confirm operation.

Handle with care, protect it from moisture and high temperatures and avoid unnecessary operation.

Fault

If the central locking system cannot be operated with the remote control, it may be due to the following:

- The range is exceeded.
- The battery voltage is too low.
- Frequent, repeated operation of the remote control while not in range, which will require reprogramming by a workshop.
- Interference from higher-power radio waves from other sources.

Unlocking ⇨ 22.

Remote control battery replacement

Replace the battery as soon as the range reduces.

Batteries do not belong in household waste. They must be disposed of at an appropriate recycling collection point.

Remove screw and open battery compartment by inserting a coin into the slot and twisting.

Replace the battery (battery type CR2016), paying attention to the installation position.

Reattach both halves of cover ensuring it engages correctly.

Replace screw and tighten.

Door locks

Anti-theft security lock

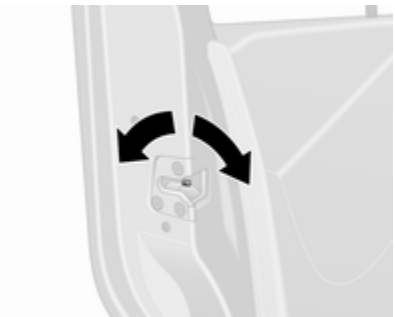

To prevent the front doors from being opened from the outside, open the door and engage the anti-theft security lock.

Using a suitable tool, turn the lock switch on the door to the horizontal locked position. The door cannot be opened from outside and can only be opened from inside the vehicle or by using the manual key.

To disengage, turn the switch to the unlocked position.

Manual door locks

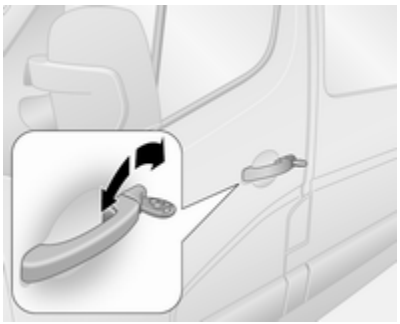

Turn the key in the driver's door lock. Open the doors by pulling the handles.

Central locking system

Unlocks and locks the front doors, sliding side doors and load compartment.

With the 3-button remote control, the front doors and load compartment (and, depending on vehicle configuration, the sliding side doors) can be unlocked and locked separately.

Note
A short time after unlocking with the remote control the doors are locked automatically if no door has been opened.

Unlocking the vehicle

Unlocking with 2-button remote control

Press 🔓 to unlock the front doors. Press again to unlock entire vehicle.

Unlocking with 3-button remote control

Depending on vehicle configuration:

- Press 🔓: Front doors and sliding side doors are unlocked.

  Press 🔓 again: Load compartment is also unlocked.
- Press 🔓: Front doors are unlocked.

  Press 🔓 again: Sliding side doors and the load compartment are also unlocked.
- Press 🔓: All doors and the load compartment are unlocked.

Locking the vehicle

Close all doors and load compartment. If the doors are not closed properly, the central locking system will not work.

Locking with 2-button remote control

Press 🔒: All doors and the load compartment are locked.

Locking with 3-button remote control

Press 🔒: All doors and the load compartment are locked.

Note

Where fitted, alarm monitoring of the passenger compartment ⇨ 32 is switched off by pressing and holding 🔒 (which is confirmed by an audible signal).

If this was done unintentionally, unlock the doors again and press 🔒 briefly to lock the vehicle.

Load compartment

Locking and unlocking load compartment with 2-button remote control

After unlocking the front doors with 🔓, press 🔓 again: Load compartment is unlocked.

Press 🔒 once: Load compartment is locked.

Locking and unlocking load compartment with 3-button remote control

Depending on vehicle configuration:

- Press 🚗: Load compartment is locked or unlocked.
- Press 🚗: Load compartment and sliding side doors are locked or unlocked.

Central locking switch

Locks or unlocks the doors and load compartment from inside the passenger compartment.

Press 🔒 to lock or unlock.

LED in switch illuminates when the vehicle is locked.

Depending on version, if the vehicle is driven with an open load compartment, the front doors (and sliding side doors) can still be locked. With the ignition switched on, press and hold 🔒 for more than 5 seconds. When closing the rear doors/tailgate, they are locked automatically.

Automatic locking when exiting the vehicle

Depending on version, the switch can also be used to lock all doors and the load compartment automatically when closing the front door and exiting the vehicle:

Remove key from ignition switch then press and hold the switch for more than 5 seconds; vehicle is locked when the front door is closed.

Automatic locking after driving off ⇨ 26.

Fault in remote control system

Unlocking

Manually unlock the front door by turning the key in the lock.

Switch on the ignition and press the central locking switch to open all doors and the load compartment.

Locking

Manually lock the front door by turning the key in the lock.

Fault in central locking system

Unlocking

Manually unlock the front door by turning the key in the lock. The other doors can be opened by pulling the interior handles.

Locking

Push inside locking knob of all doors except driver's door. Then close the driver's door and lock it from the outside with the key.

Power door locks

Combi, Bus

For safety, it is possible for the driver to operate the passenger door locks remotely.

All doors must be fully closed and automatic locking deactivated ⇨ 26.

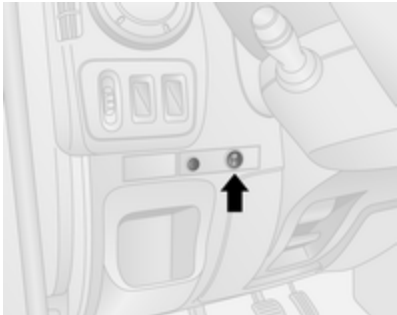

To lock, press I side of switch; the warning light alongside the switch will flash once and a beep will be heard.

Warning lights in the appropriate doors remain illuminated.

To unlock, press **0** side of switch.

Fault

In the event of a fault in the system, the warning light alongside the switch remains illuminated and an audible warning will sound.

Check the doors are manually unlocked (interior door lock switches).

If necessary, have the cause of the fault remedied by a workshop.

Automatic locking

Automatic locking after driving off

Depending on version, this security feature can be configured to automatically lock all doors and the load compartment as soon as the vehicle is driven.

Activation

With the ignition switched on, press and hold the central locking switch 🔒 for approx. 5 seconds. An audible signal confirms activation.

LED in switch illuminates when the vehicle is locked.

Deactivation

With the ignition switched on, press and hold 🔓 for approx. 5 seconds. An audible signal confirms deactivation.

Child locks

⚠Warning

Use the child locks whenever children are occupying the rear seats.

Press down the child lock, door cannot be opened from the inside. Raise to deactivate.

Doors

Sliding door

Lock and unlock the sliding side door with the remote control or key (if equipped).

Open and close the sliding side door only when the vehicle is at a standstill with the parking brake applied (on certain models, a warning chime will sound when the sliding side door is open and the parking brake is released).

The sliding side door can be locked from inside the vehicle with the interior lock switch.

Ensure the side door is fully closed and secure before driving the vehicle.

⚠Warning

Take care when operating the sliding side door. Risk of injury.

Ensure that nothing becomes trapped during operation and no-one is standing within the moving area.

If the vehicle is parked on a slope, open sliding doors may move accidentally on account of their weight.

Close the sliding doors before driving off.

Power sliding door

Opening

With vehicle at a standstill and the parking brake applied, press switch on instrument panel to open the power sliding door automatically; the LED in the switch flashes during operation.

Note
If the parking brake is not applied when the switch is pressed, a warning chime will sound.

To stop movement at any time, press the switch again. Press once more to continue power sliding door movement.

Note
If the power sliding door is locked from the inside with the child lock active, a warning chime will sound. Unlock the door manually from the inside.

Closing
Press switch again; the LED flashes and a chime sounds during operation.

In the event of opening or closing difficulties, e.g. due to frost, press and hold the switch to increase power to the sliding door.

⚠Warning

Take care when operating the power sliding door. Risk of injury, particularly to children.

Take particular care when the vehicle is parked on a slope: open or close the door fully until it latches into its locking position.

Keep a close watch on the moving door when operating. Ensure that nothing becomes trapped during operation and no-one is standing within the moving area.

Note
Do not operate power sliding door too often without engine running as this will discharge the vehicle battery.

Emergency exit

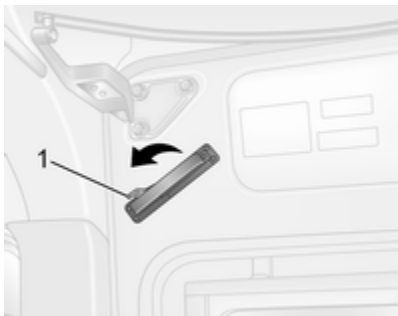

In an emergency, the sliding side door can be opened manually after releasing the interior handle.

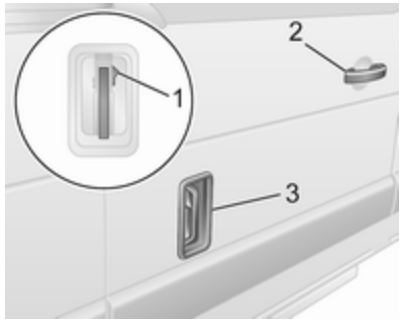

Alternatively, if the vehicle is unlocked, open the door using the exterior handle (depending on model variant). Lift the handle (3) to the second notch position, then slide the door backwards using the handle (2) near the front edge of the door.

Reset
If the door has been opened manually, the power sliding door system must be reset.

Open the sliding side door halfway and move the relevant handle to the first notch position; the warning light illuminates in the instrument panel. Then press the button (1) on the relevant handle.

Move the handle back and forth to ensure the door actuator motor operates, then press and hold the switch on the instrument panel to fully close the door; the warning light extinguishes when the system is reset correctly.

Maintenance

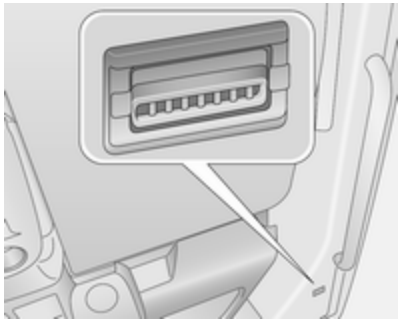

It is the owner's responsibility to have the drive belt replaced after every 25,000 cycles, and for this purpose a counter is incorporated in the lower B-pillar. The counter is incremented at each opening and closing, it is not possible to reset the counter. Seek the assistance of a workshop.

If the drive belt should fail, the door may still be opened and closed manually.

Fault

If a system fault is detected when unlocking the doors, an audible warning will sound and the LED in the switch illuminates. Check position of exterior handle. Reset handle if in the open position and use key to operate door locks.

Seek the assistance of a workshop if the fault remains.

Power side step

⚠ Warning

Take care when using the power side step, particularly in wet and cold weather conditions.

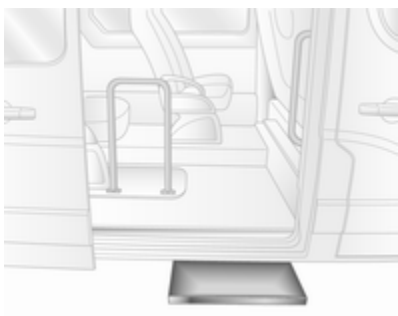

The power side step operates automatically when the sliding door is opened or closed.

⚠Warning

Ensure there is adequate clearance to allow the power side step to fully extend and retract without obstruction.

The indicator illuminates during operation of the power side step. If it remains illuminated with the door closed, the step has not retracted.

In the event of a failure, manually retract the power side step by unscrewing the orange handwheel located at the rear of the step, ensuring that there are no obstacles preventing closure. When the step is retracted, screw in the orange handwheel. Seek the assistance of a workshop.

Rear doors

Lock and unlock the rear doors with the remote control or key (if equipped).

To open the right-hand rear door, pull the exterior handle.

The right-hand door can also be opened from inside the vehicle by pulling the interior handle.

The left-hand rear door is then released using the lever.

⚠Warning

The rear lights may be obscured if the rear doors are open and the vehicle is parked on the roadside.

Make other road users aware of the vehicle, by using a warning triangle or other equipment specified in the road traffic regulations.

The doors are retained in the 90º position by locking stays.

To open the doors to 180º or further (depending on model) release locking stays from the catches on the door frames and swing doors open to the desired position.

When opening the doors to 270º, the doors are retained in the fully open position by magnets on the body side.

⚠ Warning

Ensure extended opening doors are secured when fully opened.

Opened doors may slam closed due to the force of the wind!

When closing the doors, secure each locking stay to the catch on the door frame.

The rear doors can be locked from inside the vehicle with the interior lock switch on the inside of the right-hand door.

Always close the left-hand door before the right-hand door.

Combi, Bus

In left-hand drive vehicles, the rear doors are opened from inside the vehicle by pulling the interior handle.

In right-hand drive vehicles, from inside the vehicle pull the interior handle on the right-hand door and open, then release the left-hand door by lowering the lever and open.

Always close the left-hand door before the right-hand door.

Vehicle security

Anti-theft locking system

⚠Warning

Do not use the system if there are people in the vehicle! The doors cannot be unlocked from the inside.

The system deadlocks the doors. All doors must be closed or the system cannot be activated.

Note
The anti-theft locking system cannot be activated when the hazard warning lights or sidelights are switched on.

Activation and deactivation are not possible with the central locking switch.

Activation

Press 🔒 twice within 3 seconds.

Hazard warning lights flash five times as confirmation.

Deactivation

Unlock the doors by pressing 🔓 on the remote control.

Anti-theft alarm system

The anti-theft alarm system is operated in conjunction with the central locking system.

It monitors:

- doors, tailgate, bonnet
- passenger compartment
- load compartment
- ignition
- interruption of alarm siren power supply

Activation

All doors and the bonnet must be closed.

Press 🔒 to activate anti-theft alarm system. Hazard warning lights flash twice to confirm activation.

If the hazard warning lights do not flash upon activation, a door or the bonnet is not fully closed.

Note
Changes to the vehicle interior, e.g. the use of seat covers, and open windows, could impair the function of passenger compartment monitoring.

Deactivation

Unlocking the vehicle or switching on the ignition deactivates the anti-theft alarm system. Hazard warning lights flash once to confirm deactivation.

Note
If the alarm has been triggered, unlocking the vehicle with the key will not stop the alarm siren. To stop the siren, switch on the ignition. The hazard warning lights will not flash upon deactivation if the alarm has been triggered.

Activation without monitoring of passenger compartment

Switch off monitoring of the passenger compartment when people or animals are being left in the vehicle, or if the auxiliary heater ⇨ 112 is set for a timed or remote controlled start.

Depending on vehicle configuration:

- press and hold 🔒, or
- switch ignition on and off twice quickly, then close doors and activate the anti-theft alarm system

An audible signal will sound as confirmation.

The status will remain until the doors are unlocked.

Alarm

When triggered, the alarm sounds via a separate battery-backed power sounder, and the hazard warning lights flash simultaneously. The number and duration of alarm signals are stipulated by legislation.

If the vehicle battery is disconnected or its power supply is interrupted, the alarm siren will be triggered. First deactivate the anti-theft alarm system if the vehicle battery must be disconnected.

To silence the alarm siren (if triggered) and therefore deactivate the anti-theft alarm system, reconnect vehicle battery and unlock vehicle with remote control button 🔓 (or switch on the ignition).

Immobiliser

The system is part of the ignition switch and checks whether the vehicle is allowed to be started with the key being used.

The immobiliser is activated automatically after the key has been removed from the ignition switch and also if the key is left in the ignition switch when the engine is turned off.

If the engine cannot be started, switch off the ignition and remove key, wait approx. 2 seconds and then repeat the start attempt. If start attempt is unsuccessful, attempt to start the engine using the spare key and seek the assistance of a workshop.

Note
The immobiliser does not lock the doors. You should always lock the vehicle after leaving it and switch on the anti-theft alarm system ⇨ 22, ⇨ 32.

Exterior mirrors

Convex shape

The convex exterior mirror contains an aspherical area and reduces blind spots. The shape of the mirror makes objects appear smaller, which will affect the ability to estimate distances.

Manual adjustment

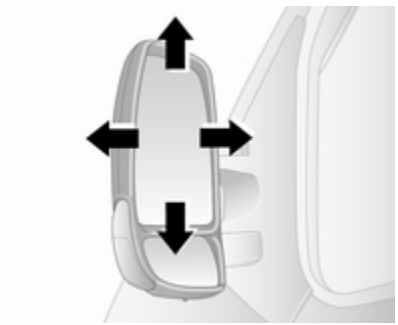

Adjust mirrors by swivelling in required direction.

The lower mirrors are not adjustable.

Electric adjustment

Switch on ignition to operate electric exterior mirrors.

Select the relevant exterior mirror by switching the control to the left or right, then swivel the control to adjust the mirror.

No mirror is selected when the control is in the centre position.

The lower mirrors are not adjustable.

Folding mirrors

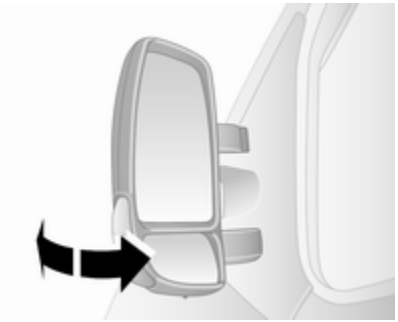

For pedestrian safety, the exterior mirrors will swing out of their normal mounting position if they are struck with sufficient force. Reposition the mirror by applying slight pressure to the mirror housing.

Parking position

The exterior mirrors can be folded in by pressing gently on the outer edge of the housing, e.g. when in a confined parking situation.

Heated mirrors

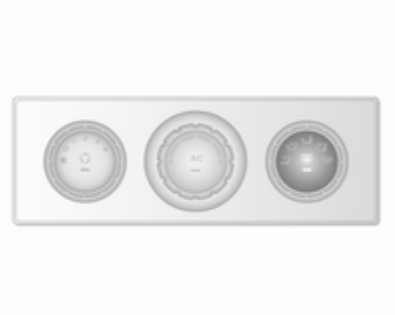

Operated by pressing on either system. LED illuminates in button during operation.

Heating works with the engine running and is switched off automatically after a short time.

Climate control system ⇨ 106.

Electronic climate control system ⇨ 108.

Interior mirrors

Manual anti-dazzle

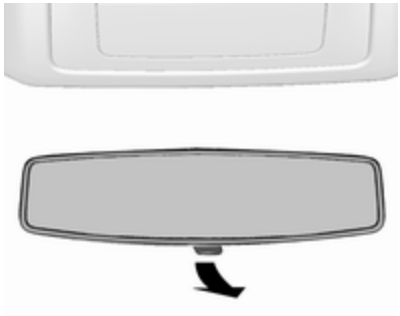

To reduce dazzle, adjust the lever on the underside of the mirror housing.

Wide view mirror

Depending on vehicle, a large convex mirror is located in the front passenger sun visor which helps to increase visibility and reduce blind spots.

Windows

Windscreen

Windscreen stickers

Do not attach stickers, e.g. toll road stickers or similar, on the windscreen in the area of the interior mirror. Otherwise the detection zone of the sensor in the mirror housing could be restricted.

Manual windows

The door windows can be opened or closed with the window cranks.

Power windows

⚠Warning

Take care when operating the power windows. Risk of injury, particularly to children.

Keep a close watch on the windows when closing them. Ensure that nothing becomes trapped in them as they move.

Switch on ignition to operate power windows.

Operate the switch for the respective window by pushing to open or pulling to close.

For vehicles with automatic opening feature for the driver's door window; when opening, operate the switch again to stop window movement.

In the event of closing difficulties due to frost or the like, operate the switch several times to close the window in stages.

Overload

If the windows are repeatedly operated within short intervals, the window operation is disabled for some time.

Rear windows

Sliding side windows

Press catch and slide window to open. Ensure catch engages when closing.

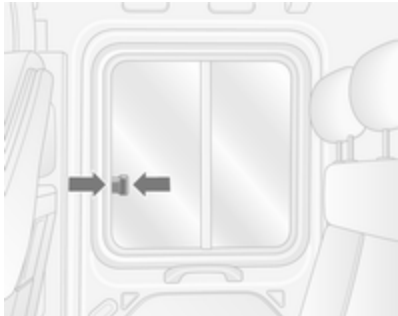

Press catch and slide window to open. Ensure catch engages when closing.

Opening side windows

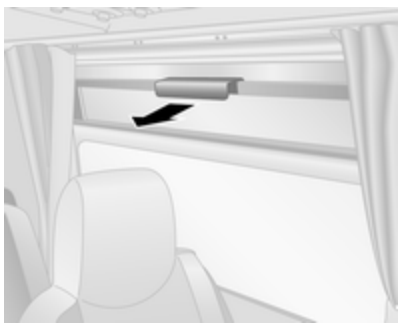

Pull handle to open window.

Note
Depending on vehicle, some windows may not open fully.

Emergency exit

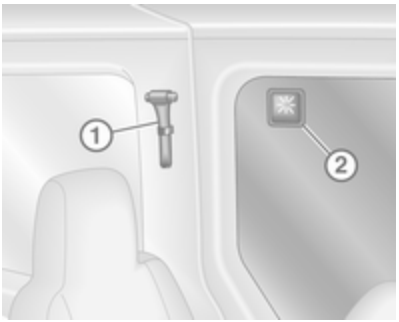

To provide an emergency exit from the vehicle, use hammer **1** to strike glass **2**.

Depending on version, emergency exit may be via the roof glass panel ⇨ 39.

Heated rear window

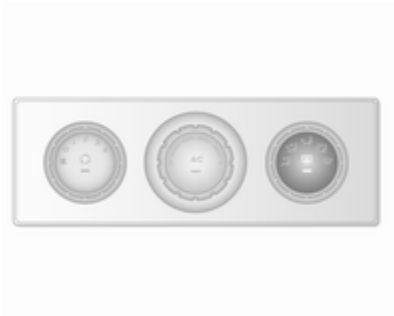

Operated by pressing on either system. LED illuminates in button during operation.

Heating works with the engine running and is switched off automatically after a short time.

Climate control system ⇨ 106.

Electronic climate control system ⇨ 108.

Sun visors

The sun visors can be folded down or swivelled to the side to prevent dazzling.

If the sun visors have integral mirrors, the mirror covers should be closed when driving.

Sun visors may also feature a holder for parking tickets etc.

Wide view mirror ⇨ 36.

Roof

Glass panel

Emergency exit

In an emergency, the glass can be broken. Use the hammer to strike the glass panel.

Depending on version, emergency exit may be via the side windows ⇨ 37.

Seats, restraints

Head restraints **40**
Front seats **41**
Seat position 41
Seat adjustment 42
Armrest 46
Heating 46
Rear seats **47**
Seat belts **49**
Three-point seat belt 50
Airbag system **52**
Front airbag system 55
Side airbag system 55
Airbag deactivation 56
Child restraints **57**
Child restraint systems 57
Child restraint installation locations 59
ISOFIX child restraint systems . . 66
Top-tether fastening eyes 66

Head restraints

Position

⚠ Warning

Only drive with the head restraint set to the proper position.

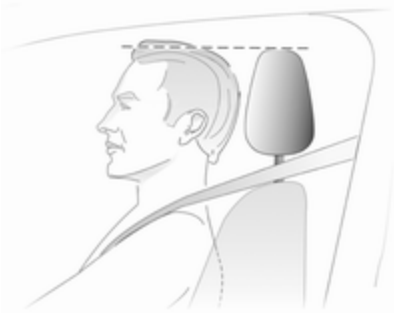

The upper edge of the head restraint should be at upper head level. If this is not possible for extremely tall people, set to highest position, and set to lowest position for small people.

Adjustment

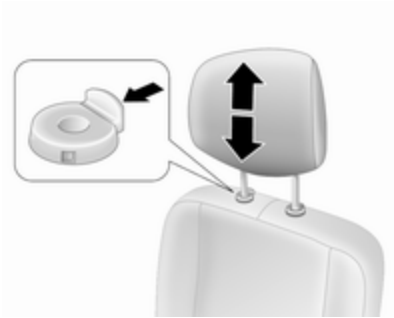

Pull up to raise or press the catch and lower head restraint. Ensure the head restraint engages.

Depending on version, head restraints can also be tilted forwards or backwards. Push or pull the lower part of the head restraint to adjust.

Note
Approved accessories may only be attached to the front passenger seat head restraint if the seat is not in use.

Removal

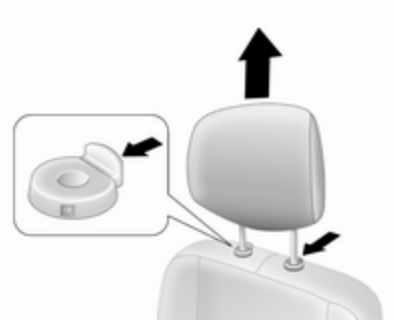

Press both catches, pull the head restraint upwards and remove.

Stow head restraints securely in load compartment. Do not drive with head restraints removed if the seat is occupied.

Front seats

Seat position

⚠ Warning

Only drive with the seat correctly adjusted.

⚠ Danger

Do not sit nearer than 25 cm from the steering wheel, to permit safe airbag deployment.

⚠ Warning

Never adjust seats while driving as they could move uncontrollably.

⚠ Warning

Never store any loose objects under the seats.

Underseat storage, storage box ⇨ 69.

- Sit with buttocks as far back against the backrest as possible. Adjust the distance between the seat and the pedals so that legs are slightly angled when pressing the pedals. Slide the front passenger seat as far back as possible.
- Set seat height high enough to have a clear field of vision on all sides and of all display instruments. There should be at least one hand of clearance between head and the roof frame. Thighs should rest lightly on the seat without pressing into it.

- Sit with shoulders as far back against the backrest as possible. Set the backrest rake so that it is possible to reach the steering wheel with arms slightly bent. Maintain contact between shoulders and the backrest when turning the steering wheel. Do not angle the backrest too far back. We recommend a maximum rake of approx. 25°.
- Adjust the steering wheel ⇨ 76.
- Adjust the head restraint ⇨ 40.
- Adjust the height of the seat belt ⇨ 50.
- Adjust the lumbar support so that it supports the natural shape of the spine ⇨ 42.

Seat adjustment

Drive only with engaged seats and backrests.

Longitudinal adjustment

Pull handle, slide seat, release handle.

Try to move the seat back and forth to ensure that the seat is locked in place.

Suspension seat longitudinal adjustment

Pull handle, slide seat, release handle.

Try to move the seat back and forth to ensure that the seat is locked in place.

Backrest inclination

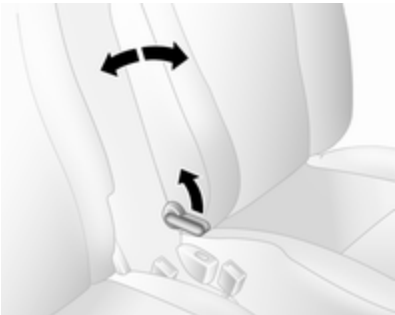

Pull lever, adjust inclination and release lever. Allow the seat to engage audibly.

Suspension seat backrest inclination

Pull lever, adjust inclination and release lever. Allow the seat to engage audibly.

Seat height

Lever pumping motion

up : seat higher
down : seat lower

Suspension seat height

Pull up front release lever up to adjust height of front part of seat.

Pull up rear release lever to adjust height of rear part of seat.

Lumbar support

Adjust lumbar support to suit personal requirements.

Increasing and decreasing support: turn the handwheel while relieving the load on the backrest.

Suspension seat lumbar support

Adjust lumbar support to suit personal requirements.

Operate hand pump repeatedly (located on underside of unit) to increase firmness.

Press release button (located at front of unit) to decrease firmness.

Suspension seat sensitivity

Rotate knob to adjust the sensitivity of the suspension seat.

turn right : more stiff
turn left : less stiff

Swivel seat adjustment

Seat positioning

Move handle **2**, slide seat, release handle.

Try to move the seat back and forth to ensure that the seat is locked in place.

Seat backrests

Pull lever **1**, adjust inclination and release lever. Allow the seat to engage audibly.

Seat base angle

Move handle **3** to adjust angle of seat base.

Lumbar support

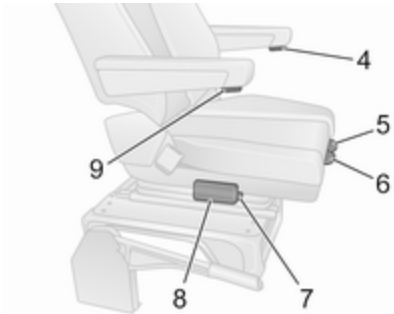

Adjust lumbar support to suit personal requirements.

Operate hand pump **8** repeatedly (located on underside of unit) to increase firmness.

Press release button **7** to decrease firmness.

Seat base positioning

Lift handle **5**, move seat base backwards or forwards, release handle.

Armrests

To adjust the height of the armrests, turn control knob **4** or **9**.

Swivelling the seat

The driver's seat can be swivelled up to 180° from the forward-facing position, e.g. for easier access to the load compartment area when the vehicle is stationary and the engine is switched off.

Before swivelling the seat, make the following preparations:

- Unfasten seat belt.
- Fold up the armrests.
- Slide seat as far back as possible.
- Set seat base angle to its lowest position.
- Adjust backrest inclination to vertical position.
- Open the driver's door.

Lift handle **6**, swivel seat from the forward-facing position, release handle.

Always return the seat to the forward-facing position before driving and ensure the seat is locked in place before starting off.

Armrest

Armrests can be folded up when not required.

Heating

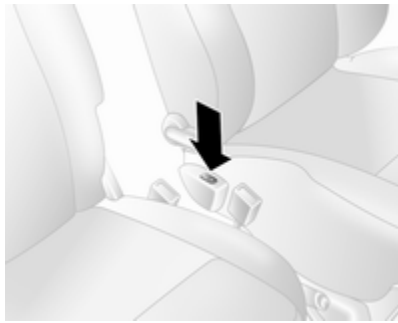

Press for the respective seat. LED in switch illuminates. Press other end of rocker switch to turn seat heating off.

Seat heating is thermostatically controlled and switches off automatically when seat temperature is sufficient. LED also illuminates when the system is on, not just when heating is active.

Prolonged use for people with sensitive skin is not recommended.

Seat heating is operational when the engine is running.

Rear seats

Rear seat access

Depending on version, to facilitate access to the rear seats, pull release lever and fold the seat backrest forwards.

⚠ Warning

Ensure that the backrest returns to its correct position and the seat belt buckles are fastened securely.

Fastening seat belt ⇨ 50.

Removable rear seats

⚠ Warning

Never remove the rear seats while driving as they could move uncontrollably.

Removal

On some variants, the cargo area can be increased by removing the rear seats.

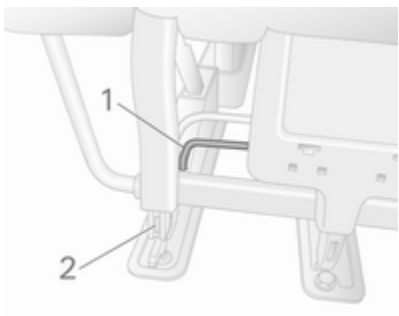

- Pull up lever **1** on both sides of the seat; the pins **2** visibly protrude to indicate that the seat is unlocked.
- Move the seat towards the rear to release from the floor anchor points.
- Lift seat to remove.

⚠ Warning

Removable rear seats are heavy! Do not attempt to remove without assistance.

Installation

Caution

The 2nd and 3rd row seats are not interchangeable and must be fitted back into their original position.

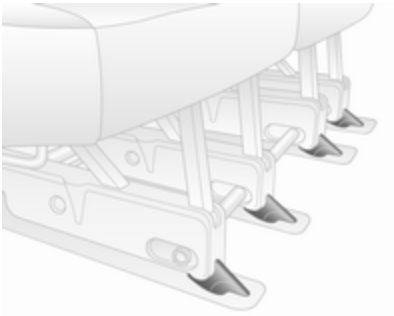

Position the seat guides immediately behind the front floor anchor points, and slide forwards to engage.

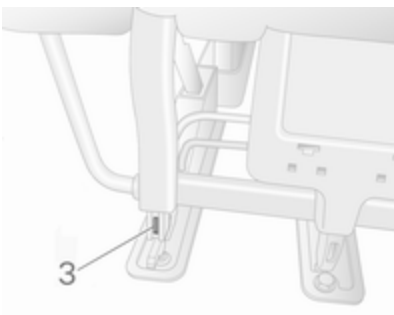

The seat locks automatically and the pins **3** will no longer be visible, to indicate that the seat is locked.

Caution
When installing the rear seats, ensure they are properly located on the floor anchor points and that the locking catches are fully engaged.

Combi, Bus

Removal

Using the tool from the tool kit located in the glovebox, turn levers to unlock the seat.

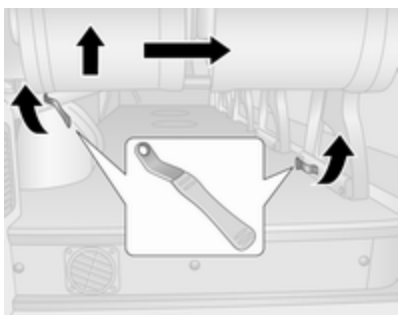

1. Release the outboard fixing.
2. Release the inboard fixing.
3. Lift the seat from the outboard side and move the seat towards the centre of the vehicle.

⚠Warning
Removable rear seats are heavy! Do not attempt to remove without assistance.

Installation

1. Position the seat over the anchor points.
2. Lower the seat until it engages.
3. Ensure the seat is locked securely in position.

Seat belts

The seat belts are locked during heavy acceleration or deceleration of the vehicle, holding the occupants in the sitting position. Therefore, the risk of injury is considerably reduced.

⚠ Warning

Fasten seat belt before each trip.

In the event of an accident, people not wearing seat belts endanger their fellow occupants and themselves.

Seat belts are designed to be used by only one person at a time. Child restraint system ⇨ 57.

Periodically check all parts of the belt system for damage and proper functionality.

Have damaged components replaced. After an accident, have the belts and triggered belt pretensioners replaced by a workshop.

Note
Make sure that the belts are not damaged by shoes or sharp-edged objects or trapped. Prevent dirt from getting into the belt retractors.

Seat belt reminder

Front seat is equipped with a seat belt reminder, indicated by control indicator in the instrument panel ⇨ 84, ⇨ 87.

Belt force limiters

On the front seats, stress on the body is reduced by the gradual release of the belt during a collision.

Belt pretensioners

In the event of a head-on or rear-end collision of a certain severity, the front seat belts are tightened.

⚠ Warning

Incorrect handling (e.g. removal or fitting of belts) can trigger the belt pretensioners.

Deployment of the belt pretensioners is indicated by continuous illumination of control indicator ⇨ 87.

Triggered belt pretensioners must be replaced by a workshop. Belt pretensioners can only be triggered once.

Note
Do not affix or install accessories or other objects that may interfere with the operation of the belt pretensioners. Do not make any modifications to belt pretensioner components as this will invalidate the vehicle type approval.

Three-point seat belt

Fasten

Withdraw the belt from the retractor, guide it untwisted across the body and insert the latch plate into the buckle. Tighten the lap belt regularly whilst driving by pulling the shoulder belt.

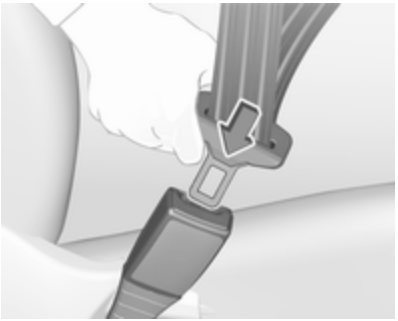

Loose or bulky clothing prevents the belt from fitting snugly. Do not place objects such as handbags or mobile phones between the belt and your body.

⚠ Warning

The belt must not rest against hard or fragile objects in the pockets of your clothing.

Seat belt reminder ⇨ 87.

Height adjustment

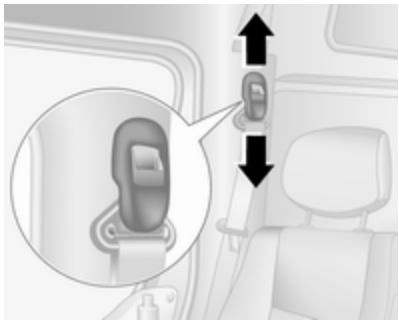

1. Pull belt out slightly.
2. Shift the height adjustment upwards or press button to disengage and push the height adjustment downwards.

Adjust the height so that the belt lies across the shoulder. It must not lie across the throat or upper arm.

⚠ Warning
Do not adjust while driving.

Unfasten

To unfasten belt, press red button on belt buckle.

Using the seat belt while pregnant

⚠ Warning
The lap belt must be positioned as low as possible across the pelvis to prevent pressure on the abdomen.

Airbag system

The airbag system consists of a number of individual systems depending on the scope of equipment.

When triggered the airbags inflate within milliseconds. They also deflate so quickly that it is often unnoticeable during the collision.

⚠ Warning
If handled improperly the airbag systems can be triggered in an explosive manner.

Note
The airbag systems and belt pretensioner control electronics are located in the centre console area. Do not put any magnetic objects in this area.

Do not fix any objects onto the airbag covers and do not cover them with other materials.

Each airbag is triggered only once. Have deployed airbags replaced by a workshop. Furthermore, it may be necessary to have the steering wheel, the instrument panel, parts of the panelling, the door seals, handles and the seats replaced.

Do not make any modifications to the airbag system as this will invalidate the vehicle type approval.

When the airbags inflate escaping hot gases may cause burns.

Control indicator for airbag systems ⇨ 87.

Child restraint systems on front passenger seat with airbag systems

Warning according to ECE R94.02:

EN: NEVER use a rear-facing child restraint system on a seat protected by an ACTIVE AIRBAG in front of it, DEATH or SERIOUS INJURY to the CHILD can occur.

DE: Nach hinten gerichtete Kindersitze NIEMALS auf einem Sitz verwenden, der durch einen davor befindlichen AKTIVEN AIRBAG geschützt ist, da dies den TOD oder SCHWERE VERLETZUNGEN DES KINDES zur Folge haben kann.

FR: NE JAMAIS utiliser un siège d'enfant orienté vers l'arrière sur un siège protégé par un COUSSIN GONFLABLE ACTIF placé devant lui, sous peine d'infliger des BLESSURES GRAVES, voire MORTELLES à l'ENFANT.

ES: NUNCA utilice un sistema de retención infantil orientado hacia atrás en un asiento protegido por un AIRBAG FRONTAL ACTIVO. Peligro de MUERTE o LESIONES GRAVES para el NIÑO.

RU: ЗАПРЕЩАЕТСЯ устанавливать детское удерживающее устройство лицом назад на сиденье автомобиля,

оборудованном фронтальной подушкой безопасности, если ПОДУШКА НЕ ОТКЛЮЧЕНА! Это может привести к СМЕРТИ или СЕРЬЕЗНЫМ ТРАВМАМ РЕБЕНКА.

NL: Gebruik NOOIT een achterwaarts gericht kinderzitje op een stoel met een ACTIEVE AIRBAG ervoor, om DODELIJK of ERNSTIG LETSEL van het KIND te voorkomen.

DA: Brug ALDRIG en bagudvendt autostol på et forsæde med AKTIV AIRBAG, BARNET kan komme I LIVSFARE eller komme ALVORLIGT TIL SKADE.

SV: Använd ALDRIG en bakåtvänd barnstol på ett säte som skyddas med en framförvarande AKTIV AIRBAG. DÖDSFALL eller ALLVARLIGA SKADOR kan drabba BARNET.

FI: ÄLÄ KOSKAAN sijoita taaksepäin suunnattua lasten turvaistuinta istuimelle, jonka edessä on AKTIIVINEN TURVATYYNY, LAPSI VOI KUOLLA tai VAMMAUTUA VAKAVASTI.

NO: Bakovervendt barnesikringsutstyr må ALDRI brukes på et sete med AKTIV KOLLISJONSPUTE foran, da det kan føre til at BARNET utsettes for LIVSFARE og fare for ALVORLIGE SKADER.

PT: NUNCA use um sistema de retenção para crianças voltado para trás num banco protegido com um AIRBAG ACTIVO na frente do mesmo, poderá ocorrer a PERDA DE VIDA ou FERIMENTOS GRAVES na CRIANÇA.

IT: Non usare mai un sistema di sicurezza per bambini rivolto all'indietro su un sedile protetto da AIRBAG ATTIVO di fronte ad esso: pericolo di MORTE o LESIONI GRAVI per il BAMBINO!

EL: ΠΟΤΕ μη χρησιμοποιείτε παιδικό κάθισμα ασφαλείας με φορά προς τα πίσω σε κάθισμα που προστατεύεται από μετωπικό ΕΝΕΡΓΟ ΑΕΡΟΣΑΚΟ, διότι το παιδί μπορεί να υποστεί ΘΑΝΑΣΙΜΟ ή ΣΟΒΑΡΟ ΤΡΑΥΜΑΤΙΣΜΟ.

PL: NIE WOLNO montować fotelika dziecięcego zwróconego tyłem do kierunku jazdy na fotelu, przed którym znajduje się WŁĄCZONA PODUSZKA POWIETRZNA. Niezastosowanie się do tego zalecenia może być przyczyną ŚMIERCI lub POWAŻNYCH OBRAŻEŃ u DZIECKA.

TR: Arkaya bakan bir çocuk emniyet sistemini KESİNLİKLE önünde bir AKTİF HAVA YASTIĞI ile korunmakta olan bir koltukta kullanmayınız. ÇOCUK ÖLEBİLİR veya AĞIR ŞEKİLDE YARALANABİLİR.

UK: НІКОЛИ не використовуйте систему безпеки для дітей, що встановлюється обличчям назад, на сидінні з УВІМКНЕНОЮ ПОДУШКОЮ БЕЗПЕКИ, інакше це може призвести до СМЕРТІ чи СЕРЙОЗНОГО ТРАВМУВАННЯ ДИТИНИ.

HU: SOHA ne használjon hátrafelé néző biztonsági gyerekülést előlről AKTÍV LÉGZSÁKKAL védett ülésen, mert a GYERMEK HALÁLÁT vagy KOMOLY SÉRÜLÉSÉT okozhatja.

HR: NIKADA nemojte koristiti sustav zadržavanja za djecu okrenut prema natrag na sjedalu s AKTIVNIM ZRAČNIM JASTUKOM ispred njega, to bi moglo dovesti do SMRTI ili OZBILJNJIH OZLJEDA za DIJETE.

SL: NIKOLI ne nameščajte otroškega varnostnega sedeža, obrnjenega v nasprotni smeri vožnje, na sedež z AKTIVNO ČELNO ZRAČNO BLAZINO, saj pri tem obstaja nevarnost RESNIH ali SMRTNIH POŠKODB za OTROKA.

SR: NIKADA ne koristiti bezbednosni sistem za decu u kome su deca okrenuta unazad na sedištu sa AKTIVNIM VAZDUŠNIM JASTUKOM ispred sedišta zato što DETE može da NASTRADA ili da se TEŠKO POVREDI.

MK: НИКОГАШ не користете детско седиште свртено наназад на седиште заштитено со АКТИВНО ВОЗДУШНО ПЕРНИЧЕ пред него, затоа што детето може ДА ЗАГИНЕ или да биде ТЕШКО ПОВРЕДЕНО.

BG: НИКОГА не използвайте детска седалка, гледаща назад, върху седалка, която е защитена чрез АКТИВНА ВЪЗДУШНА ВЪЗГЛАВНИЦА пред нея - може да се стигне до СМЪРТ или СЕРИОЗНО НАРАНЯВАНЕ на ДЕТЕТО.

RO: Nu utilizați NICIODATĂ un scaun pentru copil îndreptat spre partea din spate a mașinii pe un scaun protejat de un AIRBAG ACTIV în fața sa; acest lucru poate duce la DECESUL sau VĂTĂMAREA GRAVĂ a COPILULUI.

CS: NIKDY nepoužívejte dětský zádržný systém instalovaný proti směru jízdy na sedadle, které je chráněno před sedadlem AKTIVNÍM AIRBAGEM. Mohlo by dojít k VÁŽNÉMU PORANĚNÍ nebo ÚMRTÍ DÍTĚTE.

SK: NIKDY nepoužívajte detskú sedačku otočenú vzad na sedadle chránenom AKTÍVNYM AIRBAGOM, pretože môže dôjsť k SMRTI alebo VÁŽNYM ZRANENIAM DIEŤAŤA.

LT: JOKIU BŪDU nemontuokite atgal atgręžtos vaiko tvirtinimo sistemos sėdynėje, prieš kurią įrengta AKTYVI ORO PAGALVĖ, nes VAIKAS GALI ŽŪTI arba RIMTAI SUSIŽALOTI.

LV: NEKĀDĀ GADĪJUMĀ neizmantojiet uz aizmuguri vērstu bērnu sēdeklīti sēdvietā, kas tiek aizsargāta ar tās priekšā uzstādītu AKTĪVU DROŠĪBAS SPILVENU, jo pretējā gadījumā BĒRNS var gūt SMAGAS TRAUMAS vai IET BOJĀ.

ET: ÄRGE kasutage tahapoole suunatud lapseturvaistet istmel, mille ees on AKTIIVSE TURVAPADJAGA kaitstud iste, sest see võib põhjustada LAPSE SURMA või TÕSISE VIGASTUSE.

MT: QATT tuża trażżin għat-tfal li jħares lejn in-naħa ta' wara fuq sit protett b'AIRBAG ATTIV quddiemu; dan jista' jikkawża l-MEWT jew ĠRIEĦI SERJI lit-TFAL.

Beyond the warning required by ECE R94.02, for safety reasons a forward-facing child restraint system must only be used subject to the instructions and restrictions in the table ⇨ 59.

The airbag label may be located on both sides of the front passenger sun visor.

⚠ Danger

Do not use a child restraint system on the passenger seat with active front airbag.

Airbag deactivation ⇨ 56.

Front airbag system

The front airbag system consists of one airbag in the steering wheel and one in the instrument panel on the front passenger side. These can be identified by the word **AIRBAG**.

Additionally there is a warning label on the side of the instrument panel, visible when the front passenger door is open.

The front airbag system is triggered in the event of an accident of a certain severity. The ignition must be switched on.

The inflated airbags cushion the impact, thereby reducing the risk of injury to the upper body and head of the front seat occupants considerably.

⚠ Warning

Optimum protection is only provided when the seat is in the proper position.

Seat position ⇨ 41.

Keep the area in which the airbag inflates clear of obstructions.

Fasten the seat belt correctly and engage securely. Only then is the airbag able to protect.

Side airbag system

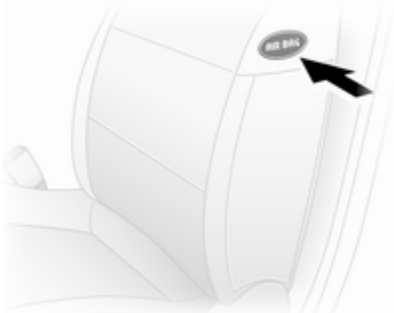

The side airbag system consists of an airbag in each front seat backrest. This can be identified by the word **AIRBAG**.

The side airbag system is triggered in the event of an accident of a certain severity. The ignition must be switched on.

The inflated airbags cushion the impact, thereby reducing the risk of injury to the upper body and pelvis in the event of a side-on collision considerably.

⚠Warning

Keep the area in which the airbag inflates clear of obstructions.

Note
Only use protective seat covers that have been approved for the vehicle. Be careful not to cover the airbags.

Airbag deactivation

Front airbag and side airbag systems for the front passenger seat must be deactivated if a child restraint system is to be fitted on this seat, in accordance with the instructions in the child restraint installation location tables ⇨ 59.

The belt pretensioners and all driver airbag systems will remain active.

The front passenger airbag system can be deactivated via a switch on the side of the instrument panel.

With the ignition off, open the front door, push switch in and rotate anti-clockwise to the **OFF** position.

Front passenger seat airbags are deactivated and will not inflate in the event of a collision. Control indicator ⇨ 87 illuminates continuously in the instrument panel and a corresponding message appears in the Driver Information Centre (DIC) ⇨ 93.

A child restraint system can be installed in accordance with the installation locations chart ⇨ 59. An adult must not occupy the front passenger seat.

⚠ Danger

Risk of fatal injury for a child using a child restraint system together with activated front passenger airbag.

Risk of fatal injury for an adult person with deactivated front passenger airbag.

As long as control indicator is not illuminated, the airbag systems for the front passenger seat will inflate in the event of a collision.

If control indicator remains illuminated together with , this indicates a fault within the system. The switch position may have been changed inadvertently with the ignition on. Turn ignition off and on again and reset the switch position. If and still remain illuminated, seek the assistance of a workshop.

Change status only when the vehicle is stopped with the ignition off. Status remains until the next change.

Control indicator for airbag deactivation ⇨ 87.

Child restraints

Child restraint systems

We recommend the Opel child restraint system which is tailored specifically to the vehicle.

When a child restraint system is being used, pay attention to the following usage and installation instructions and also those supplied with the child restraint system.

Always comply with local or national regulations. In some countries, the use of child restraint systems is forbidden on certain seats.

⚠ Warning

When using a child restraint system on the front passenger seat, the airbag systems for the front passenger seat must be deactivated; if not, the triggering of the airbags poses a risk of fatal injury to the child.

This is especially the case if rear-facing child restraint systems are used on the front passenger seat.

Airbag deactivation ⇨ 56.

Airbag label ⇨ 52.

The rear seats are the most convenient location to fasten a child restraint system.

Children should travel facing rearwards in the vehicle as long as possible. This makes sure that the child's backbone, which is still very weak, is under less strain in the event of an accident.

Child locks ⇨ 26.

Selecting the right system

Suitable are restraint systems that comply with valid UN ECE regulations. Check local laws and regulations for mandatory use of child restraint systems.

Ensure that the child restraint system to be installed is compatible with the vehicle type.

Ensure that the mounting location of the child restraint system within the vehicle is correct, see following tables.

Allow children to enter and exit the vehicle only on the side facing away from the traffic.

When the child restraint system is not in use, secure the seat with a seat belt or remove it from the vehicle.

Child restraint systems could be fastened with ISOFIX mounting brackets, Top-tether if available, and/or a three-point seat belt. Refer to the following tables.

Note

Do not affix anything on the child restraint systems and do not cover them with any other materials.

A child restraint system which has been subjected to stress in an accident must be replaced.

Child restraint installation locations

Permissible options for fitting a child restraint system

Front seats - All variants

Weight and age class	Single seat - front passenger side[1]		Bench seat - front passenger side			
	without airbag	with airbag	without airbag		with airbag	
			centre	outer	centre	outer
Group 0: up to 10 kg or approx. 10 months **Group 0+: up to 13 kg** or approx. 2 years	U	U[2]	U	U	U[2]	U[2]
Group I: 9 to 18 kg or approx. 8 months to 4 years	U	U[2]	U	U	U[2]	U[2]
Group II: 15 to 25 kg or approx. 3 to 7 years **Group III: 22 to 36 kg** or approx. 6 to 12 years	U	U[2]	U	U	U[2]	U[2]

1) If adjustable, ensure seat is in its rearmost position. Make sure vehicle seat belt is as straight as possible between shoulder and upper anchorage point.
2) Ensure the front passenger airbag system is deactivated when installing a child restraint in this position.

Doublecab - rear seats

Weight and age class	2nd row seats	
	Outer	Centre
Group 0: up to 10 kg or approx. 10 months **Group 0+: up to 13 kg** or approx. 2 years	U	X
Group I: 9 to 18 kg or approx. 8 months to 4 years	U	X
Group II: 15 to 25 kg or approx. 3 to 7 years **Group III: 22 to 36 kg** or approx. 6 to 12 years	U	X

Combi - rear seats Weight and age class	2nd row seats Driver side outer seat	Centre seat	Passenger side outer seat	3rd row seats
Group 0: up to 10 kg or approx. 10 months **Group 0+: up to 13 kg** or approx. 2 years	U[3], +	X	X	X
Group I: 9 to 18 kg or approx. 8 months to 4 years	U[4], +	UF[4], +	UF[4]	X
Group II: 15 to 25 kg or approx. 3 to 7 years **Group III: 22 to 36 kg** or approx. 6 to 12 years	U[4]	UF[4]	UF[4]	X

3) Move the front seat as far forward as possible to install a rear facing child seat, then move back the seat in front in accordance with the child seat instructions.
4) Forward facing child seat; position the seatback of the child seat in contact with the seatback of the vehicle seat. Adjust the height of the headrest or remove it if necessary; do not push the seat in front of the child more than halfway back on its runners and do not recline the seatback more than 25°.

Bus - rear seats

Weight and age class	Rear seats
Group 0: up to 10 kg or approx. 10 months **Group 0+: up to 13 kg** or approx. 2 years	X
Group I: 9 to 18 kg or approx. 8 months to 4 years	X
Group II: 15 to 25 kg or approx. 3 to 7 years **Group III: 22 to 36 kg** or approx. 6 to 12 years	X

Crew cab - rear seats

Weight and age class	2nd row seats	
	Outer	Centre
Group 0: up to 10 kg or approx. 10 months **Group 0+: up to 13 kg** or approx. 2 years	U	X
Group I: 9 to 18 kg or approx. 8 months to 4 years	U	X
Group II: 15 to 25 kg or approx. 3 to 7 years **Group III: 22 to 36 kg** or approx. 6 to 12 years	U	X

U : suitable for universal category restraint systems for use in this weight and age class, in conjunction with three-point seat belt.

UF : suitable for universal category forward-facing restraint systems for use in this weight and age class, in conjunction with three-point seat belt.

+ : suitable for ISOFIX child restraint system with mounting brackets and anchorage points, where fitted. When mounting an ISOFIX child restraint system, only systems that have been approved for the vehicle may be used. Refer to "Permissible options for fitting an ISOFIX child restraint system".

X : seat position not suitable for children in this weight and age class.

Permissible options for fitting an ISOFIX child restraint system

Combi

Weight class	Size class	Fixture	Front seats	2nd row seats			3rd row seats
				Driver side outer seat	Centre seat	Passenger side outer seat	
Group 0: up to 10 kg or approx. 10 months	E	ISO/R1	X	IL	X	X	X
Group 0+: up to 13 kg or approx. 2 years	E	ISO/R1	X	IL	X	X	X
	D	ISO/R2	X	IL	X	X	X
	C	ISO/R3	X	IL	X	X	X
Group I: 9 to 18 kg or approx. 8 months to 4 years	D	ISO/R2	X	IL	X	X	X
	C	ISO/R3	X	IL	X	X	X
	B	ISO/F2	X	IL, IUF	IL, IUF	X	X
	B1	ISO/F2X	X	IL, IUF	IL, IUF	X	X
	A	ISO/F3	X	IL, IUF	IL, IUF	X	X

IL : suitable for particular ISOFIX restraint systems of the "specific-vehicle", "restricted" or "semi-universal" categories. The ISOFIX restraint system must be approved for the specific vehicle type.
IUF : suitable for ISOFIX forward-facing child restraint systems of universal category approved for use in this weight class.
X : no ISOFIX child restraint system approved in this weight class.

ISOFIX size class and seat device

A - ISO/F3	:	forward-facing child restraint system for children of maximum size in the weight class 9 to 18 kg.
B - ISO/F2	:	forward-facing child restraint system for smaller children in the weight class 9 to 18 kg.
B1 - ISO/F2X	:	forward-facing child restraint system for smaller children in the weight class 9 to 18 kg.
C - ISO/R3	:	rear-facing child restraint system for children of maximum size in the weight class up to 18 kg.
D - ISO/R2	:	rear-facing child restraint system for smaller children in the weight class up to 18 kg.
E - ISO/R1	:	rear-facing child restraint system for young children in the weight class up to 13 kg.

ISOFIX child restraint systems

Fasten vehicle-approved ISOFIX child restraint systems to the ISOFIX mounting brackets.

When using ISOFIX mounting brackets for seat mounting, universally approved child restraint systems for ISOFIX may be used.

Permissible mounting location positions for ISOFIX child restraint systems are marked in the tables by **+**, IL and IUF.

Top-tether fastening eyes

Top-Tether fastening eyes are located on the back of the seat.

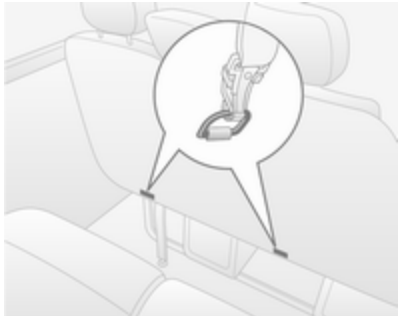

In addition to the ISOFIX mounting, fasten the Top-Tether strap to the Top-Tether fastening eyes. The strap must run between the two guide rods of the head restraint.

ISOFIX child restraint systems of universal category positions are marked in the table by IUF.

Storage

Storage compartments **67**
Instrument panel storage 67
Glovebox 68
Cupholders 68
Front storage 68
Overhead console 68
Underseat storage 69
Overcab storage 69
Load compartment **70**
Lashing eyes 70
Cargo management system 70
Safety net 72
Warning triangle 72
First aid kit 72
Fire extinguisher 72
Roof rack system **73**
Roof rack 73
Loading information **73**

Storage compartments

⚠ Warning

Do not store heavy or sharp objects in the storage compartments. Otherwise vehicle occupants could be injured by objects being thrown around in the event of hard braking, a sudden change in direction or an accident.

Instrument panel storage

Storage compartments, pockets and trays are located in the instrument panel.

A phone holder and/or a coin holder with a clip for holding tickets is located on the top of the instrument panel.

The tray located centrally on top of the instrument panel has a lid.

Document holder

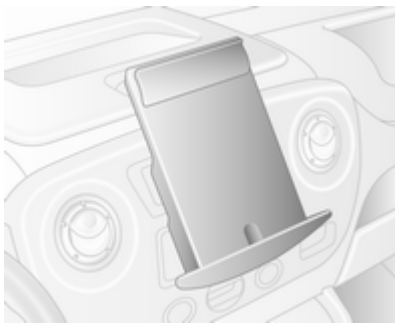

Withdraw the document holder from the instrument panel by pulling the base towards you and then swivelling it downwards.

To fold away, raise the base until the document holder is horizontal, then push fully in.

Glovebox

The glovebox should be closed whilst driving.

Glovebox cooler ⇨ 117.

Cupholders

Cupholders are located at either end of the instrument panel and centrally in the lower instrument panel.

The cupholders can also be used to hold the portable ashtray unit ⇨ 80.

Front storage

Three coat hooks are located on the cabin bulkhead

The front door pockets contain bottle holders.

Folding passenger seatback

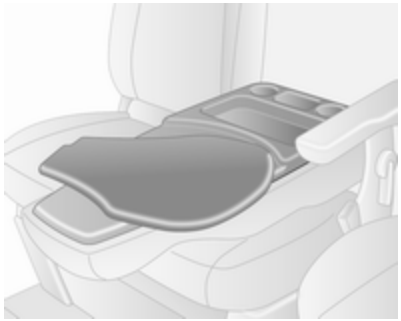

The passenger seat backrest, when folded fully forwards, features storage compartments and cupholders.

The swivelling shelf, which can be used for writing or documents, must be returned to its original position before raising the seat backrest.

Overhead console

The total weight in these compartments must not exceed 5 kg.

Underseat storage

Using the two loops on the passenger seat cushion, pull the cushion forwards to gain access to the storage under the seat.

Rear bench seat

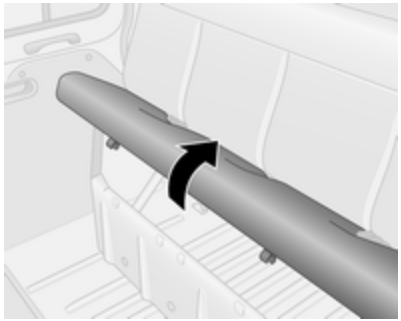

Raise seat base to gain access to storage compartment under the bench seat.

Overcab storage

The total weight in this compartment must not exceed 35 kg.

Rear storage

Combi, Bus

Objects can be stored in the overhead storage compartments above the rear passenger seats.

The total weight must not exceed 20 kg evenly distributed.

Load compartment

Lashing eyes

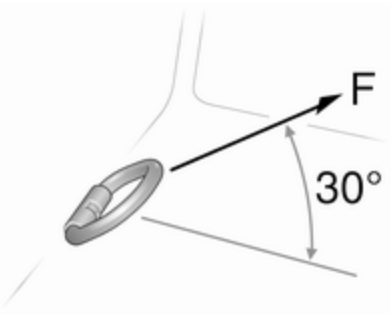

Lashing eyes are mounted in the load compartment to enable cargo to be secured in position using lashing straps or a luggage floor net.

The maximum force applied to the lashing eyes should not exceed 6250 N at 30°.

Removable lashing eyes

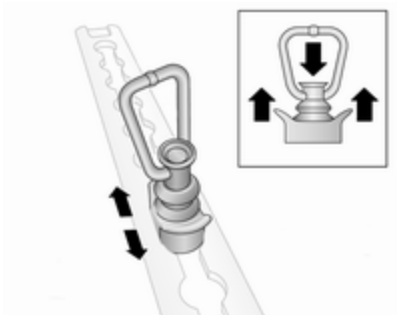

To reposition, press down on the centre cap and slide to the desired position. Ensure the lashing eye engages correctly in the recess.

Loading information ⇨ 73.

Cargo management system

Moveable partition wall

The moveable partition wall can be used between the floor and roof rails.

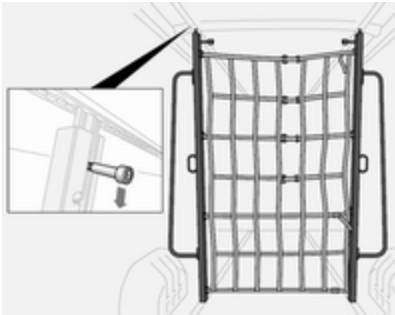

To move, pull down on the latch to release and position the wall as required. Ensure the latch engages fully and the partition wall is upright.

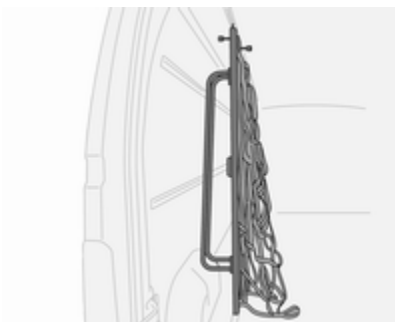

Store the partition wall to one side of the load compartment when not in use.

Telescopic blocking bars

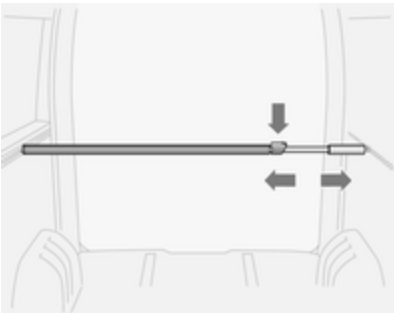

The telescope blocking bars can be used in a vertical or horizontal position.

Ensure the blocking bars are fully engaged in the load rails before loading.

To release, press down on the lock and slide the bar at the same time.

Maximum loading 100 daN/700 mm.

Ratchet straps

Using the appropriate ratchet straps, objects can be secured to the removable lashing eyes in the side or floor load rails.

The maximum loading for the floor rails is 500 daN/700 mm.

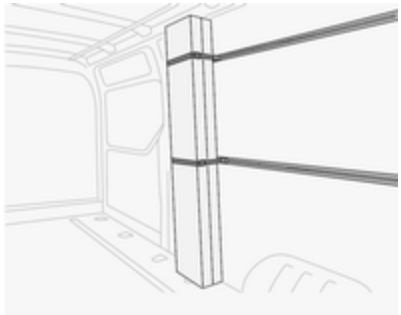

The maximum loading for the side rails is 100 daN/700 mm.

Removable lashing eyes ⇨ 70, Loading information ⇨ 73.

Safety net

Lower the safety net from the roof area and attach to the lashing eyes ⇨ 70.

Adjust the tension on the straps to ensure the load is secure.

When not in use the safety net should be stored in the roof area.

Loading information ⇨ 73.

Warning triangle

The warning triangle can be accommodated in the space under the front seats.

Underseat storage ⇨ 69.

First aid kit

As a visible indication of the presence of a first aid kit, a label may be located on the overhead console ⇨ 68.

The first aid kit can be accommodated in the space under the front seats.

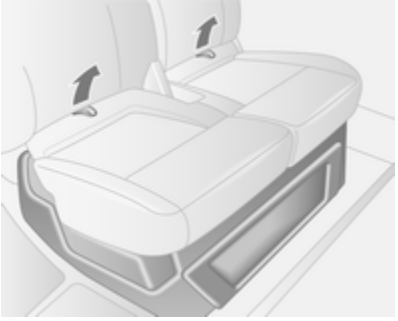

Using the two loops on the seat cushion, pull the cushion forwards to gain access.

Underseat storage ⇨ 69.

Depending on version, the first aid kit may alternatively be located in the space between the front seats or in the overhead console.

Fire extinguisher

As a visible indication of the presence of a fire extinguisher, a label may be located on the overhead console ⇨ 68.

The fire extinguisher can be accommodated in the space under the front seats. Using the two loops on the seat cushion, pull the cushion forwards to gain access.

Underseat storage ⇨ 69.

Depending on version, the fire extinguisher may alternatively be located in the space between the front seats.

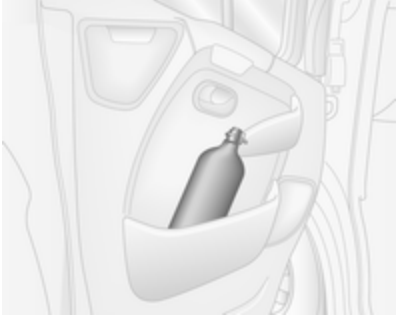

An additional fire extinguisher may be located in the front door panel or in the load compartment.

Roof rack system

Roof rack

For safety reasons and to avoid damage to the roof, the vehicle approved roof rack system is recommended.

Follow the installation instructions and remove the roof rack when not in use.

Loading information

- Heavy objects in the load compartment should be evenly distributed and placed as far forward as possible. If objects can be stacked, the heavier objects should be placed at the bottom.
- Secure objects with lashing straps attached to lashing eyes ⇨ 70.
- Secure loose objects in load compartment to prevent them from sliding.
- The load must not obstruct the operation of the pedals, parking brake and gear selector lever, or hinder the freedom of movement of the driver. Do not place any unsecured objects in the interior.
- Do not drive with an open load compartment. In addition, the number plate is only distinguishable and illuminated correctly if the doors are closed.

⚠Warning

Always make sure that the load in the vehicle is securely stowed. Otherwise objects can be thrown around inside the vehicle and cause personal injury or damage to the load or vehicle.

- The payload is the difference between the permitted gross vehicle weight (see identification plate ⇨ 206) and the EC kerb weight.

  To calculate the payload, enter the data for your vehicle in the Weights table at the front of this manual.

  The EC kerb weight includes weights for the driver (68 kg), luggage (7 kg) and all fluids (fuel tank 90% full).

  Optional equipment and accessories increase the kerb weight.
- Driving with a roof load increases the sensitivity of the vehicle to cross-winds and has a detrimental effect on vehicle handling due to the vehicle's higher centre of gravity. Distribute the load evenly and secure it properly with retaining straps. Adjust the tyre pressure and vehicle speed according to the load conditions. Check and retighten the straps frequently.

  Do not drive faster than 120 km/h.
- The permissible roof load (which includes the weight of the roof rack) is 200 kg for standard roof variants. The roof load is the combined weight of the roof rack and the load.

Instruments and controls

Controls **76**
Steering wheel adjustment 76
Steering wheel controls 76
Horn 76
Steering column controls 76
Windscreen wiper/washer 77
Outside temperature 78
Clock 78
Power outlets 79
Cigarette lighter 79
Ashtrays 80
Warning lights, gauges and indicators **80**
Instrument cluster 80
Speedometer 80
Odometer 81
Trip odometer 81
Tachometer 81
Fuel gauge 81
Engine coolant temperature gauge 82
Engine oil level monitor 82
Service display 83
Transmission display 83
Control indicators 84
Turn signal 87
Seat belt reminder 87
Airbag and belt tensioners 87
Airbag deactivation 87
Charging system 88
Malfunction indicator light 88
Service vehicle soon 88
Stop engine 89
Brake system 89
Antilock brake system (ABS) 89
Upshift 89
Lane departure warning 89
Electronic Stability Program 90
Electronic Stability Program off 90
Engine coolant temperature 90
Preheating 90
AdBlue 90
Tyre pressure monitoring system 90
Engine oil pressure 91
Low fuel 91
Stop-start system 91
Exterior light 92
High beam 92
High beam assist 92
Fog light 92
Rear fog light 92
Cruise control 92
Tachograph 92
Door open 92
Information displays **93**
Driver Information Centre 93
Info display 93
Vehicle messages **93**
Warning chimes 94
Trip computer **95**
Tachograph **97**

Controls

Steering wheel adjustment

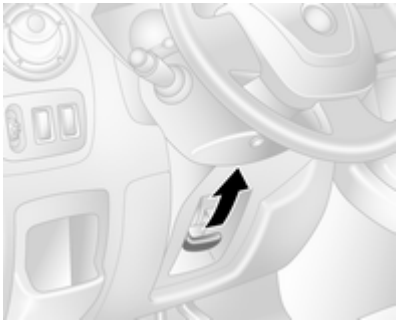

Unlock lever, adjust steering wheel, then engage lever and ensure it is fully locked.

Do not adjust steering wheel unless vehicle is stationary and steering wheel lock has been released.

Steering wheel controls

The cruise control and speed limiter can be operated via the controls on the steering wheel.

Cruise control and speed limiter ⇨ 143.

Horn

Press .

The horn will sound regardless of ignition switch position.

Steering column controls

The Infotainment system can also be operated via the controls on the steering column.

Further information is available in the Infotainment manual.

Windscreen wiper/washer

Windscreen wiper

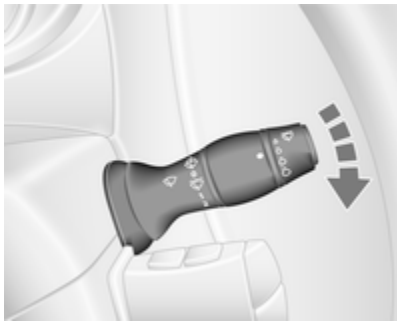

0	:	off
/AUTO	:	timed interval wiping or automatic wiping with rain sensor
1	:	slow
2	:	fast

Do not use if the windscreen is frozen.

Switch off in car washes.

Automatic wiping with rain sensor

/AUTO	:	automatic wiping with rain sensor

The rain sensor detects the amount of water on the windscreen and automatically regulates the frequency of the windscreen wipers.

Automatic wiping will need to be reselected whenever the ignition has been switched off.

Adjustable sensitivity of the rain sensor

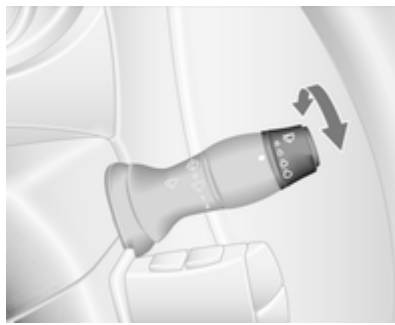

Turn the adjuster wheel to adjust the sensitivity:

low sensitivity	:	turn adjuster wheel downwards
high sensitivity	:	turn adjuster wheel upwards

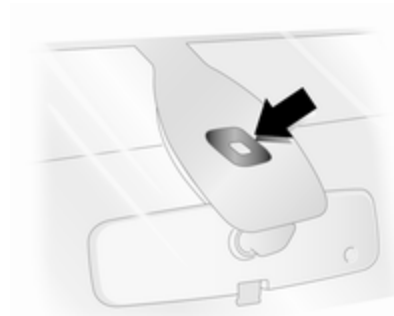

Keep the sensor free from dust, dirt and ice.

Windscreen washer

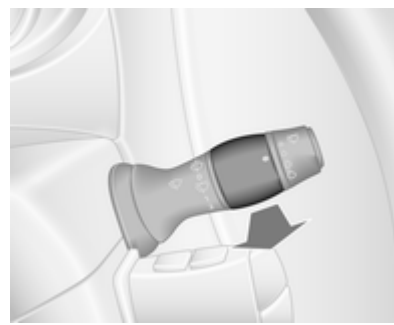

Pull lever. Washer fluid is sprayed onto the windscreen.

short pull : wiper swipes once
long pull : wiper swipes for a few strokes

Outside temperature

A drop in temperature is indicated immediately and a rise in temperature after a time delay.

If outside temperatures drop to 3 °C, the **°C** flashes in the information display as a warning for icy road conditions. This will continue to flash until temperatures rise above 3 °C.

⚠ Warning

The road surface may already be icy even though the display indicates a few degrees above 0 °C.

Clock

Depending on vehicle, the current time and/or date may appear in the information display ⇨ 93 or the Driver Information Centre (DIC) ⇨ 93.

Set time and date in information display

Hours and minutes can be adjusted by pressing the appropriate buttons by the display or with the Infotainment system controls.

Further information is available in the Infotainment system manual.

Set time in DIC

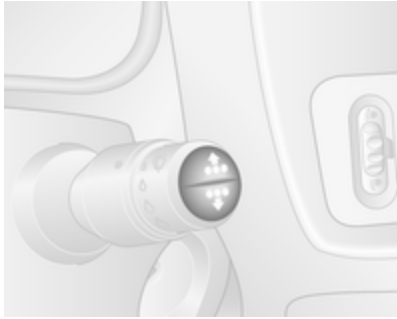

Display the clock function by pressing button repeatedly on end of wiper lever. When the time flashes (after approx. 2 seconds):

- Press and hold the bottom button.
- Hours flash.

- Press top button to change hours.
- Press and hold bottom button to set hours.
- Minutes flash.
- Press top button to change minutes.
- Press and hold bottom button to set minutes and exit setting mode.

Power outlets

12 V power outlets are located in the instrument panel and in the rear of the vehicle.

Connecting electrical accessories while the engine is off will discharge the vehicle battery.

Do not exceed the maximum power consumption of 120 watts.

With ignition off the power outlet is deactivated.

Additionally the power outlet may be deactivated in case of low battery voltage.

Electrical accessories that are connected must comply with the electromagnetic compatibility requirements laid down in DIN VDE 40 839.

Caution

Do not connect any current-delivering accessories, e.g. electrical charging devices or batteries.

Do not damage the outlets by using unsuitable plugs.

Cigarette lighter

Press in cigarette lighter. It switches off automatically once the element is glowing. Pull out lighter.

Ashtrays

Caution
To be used only for ash and not for combustible rubbish.

Portable ashtray

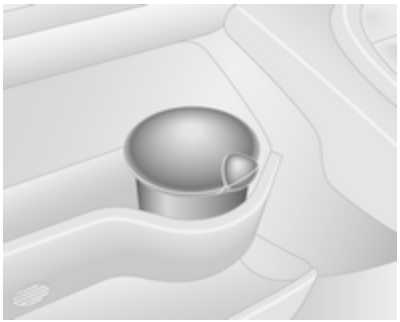

Ashtray container for mobile use in the vehicle. To use, open cover.

Warning lights, gauges and indicators

Instrument cluster

In some versions, the needles of the instruments briefly rotate to the end position when the ignition is switched on.

Speedometer

Indicates vehicle speed.

Speed limiter

Maximum speed may be restricted by a speed limiter. As a visible indication of this, a warning label is located on the instrument panel.

A warning buzzer will sound for 10 seconds if the vehicle briefly exceeds the set limit.

Note
Under certain conditions (e.g. steep inclines) the vehicle speed may exceed the set limit.

Speed limiter ⇨ 146, cruise control speed limiter ⇨ 143.

Odometer

Displays the recorded distance in km.

Trip odometer

The trip odometer displays the distance travelled since the last reset.

Press button once on end of windscreen wiper lever to display the trip odometer.

To reset, with the trip odometer displayed, press and hold button for a few seconds with the ignition on. The display will flash and the value will reset to zero.

Tachograph ⇨ 97.

Tachometer

Displays the engine speed.

Drive in a low engine speed range for each gear as much as possible.

Caution
If the needle is in the red warning zone, the maximum permitted engine speed is exceeded. Engine at risk.

Fuel gauge

Displays fuel level in the tank.

Control indicator ⛽ illuminates if the level in the tank is low. Refuel immediately ⇨ 153.

Never run the tank dry. Diesel fuel system, bleeding ⇨ 167.

Because of the fuel remaining in the tank, the top-up quantity may be less than the specified tank capacity.

Adblue gauge

Displays Adblue level in the tank.

Control indicator ⇨ 90 illuminates if the level in the tank is low. Refill Adblue as soon as possible to avoid prevention of engine starts ⇨ 129.

Engine coolant temperature gauge

Displays the coolant temperature.

left area	:	engine operating temperature not yet reached
central area	:	normal operating temperature
right area	:	temperature too high

Control indicator illuminates if the temperature is too high ⇨ 89, ⇨ 90.

Caution

If engine coolant temperature is too high, stop vehicle, switch off engine. Danger to engine. Check coolant level.

For physical reasons, the coolant temperature gauge shows the coolant temperature only if the coolant level is adequate.

Engine oil level monitor

The engine oil level monitor is correct only if the vehicle is parked on a level surface with a cold engine.

If the engine oil level is correct when the ignition is switched on **OIL LEVEL CORRECT** appears briefly in the Driver Information Centre (DIC).

If the engine oil is above the minimum level, press the trip computer button on the end of the wiper lever within 30 seconds of switching on the ignition. The message **OIL LEVEL** is displayed in combination with the squares that correspond to the oil level.

As the oil level diminishes, the squares in the display are replaced with dashes.

□□□□□□ : maximum level
□□□- - - : intermediate level
- - - - - - : minimum level

If the minimum engine oil level is reached **TOP-UP OIL LEVEL** is displayed in combination with control indicator after the ignition is switched on for 30 seconds. Check and top up engine oil ⇨ 161.

To exit the oil level monitor display, press either trip computer button.

Trip computer ⇨ 95.

Service display

When the ignition is switched on, the remaining distance before the next service is due may be shown briefly in the Driver Information Centre (DIC). Based on driving conditions, the interval at which a service will be indicated can vary considerably.

When the remaining distance before the next service is less than 3000 km or 2 months, **SERVICE IN** appears in the DIC.

When the distance reaches 0 km or the service date is due, control indicators and illuminate in the instrument cluster and **SERVICE DUE** appears in the DIC.

The vehicle needs a service. Seek the assistance of a workshop.

Resetting the service display

After a service, the service display must be reset: if available, select the distance before service display in the DIC, then press and hold button on end of wiper lever for approx. 10 seconds until the distance before service is displayed continuously.

Trip computer ⇨ 95.

Driver Information Centre (DIC) ⇨ 93.

Service information ⇨ 201.

Transmission display

The mode or selected gear of the manual transmission automated is shown in the transmission display.

R : reverse gear
N : neutral
A : automatic mode
kg : laden mode
: winter mode
: apply footbrake
: transmission electronics

Manual transmission automated ⇨ 135.

Control indicators

The control indicators described are not present in all vehicles. The description applies to all instrument versions. Depending on the equipment, the position of the control indicators may vary. When the ignition is switched on, most control indicators will illuminate briefly as a functionality test.

The control indicator colours mean:

red	:	danger, important reminder
yellow	:	warning, information, fault
green	:	confirmation of activation
blue	:	confirmation of activation
white	:	confirmation of activation

Control indicators in the instrument cluster

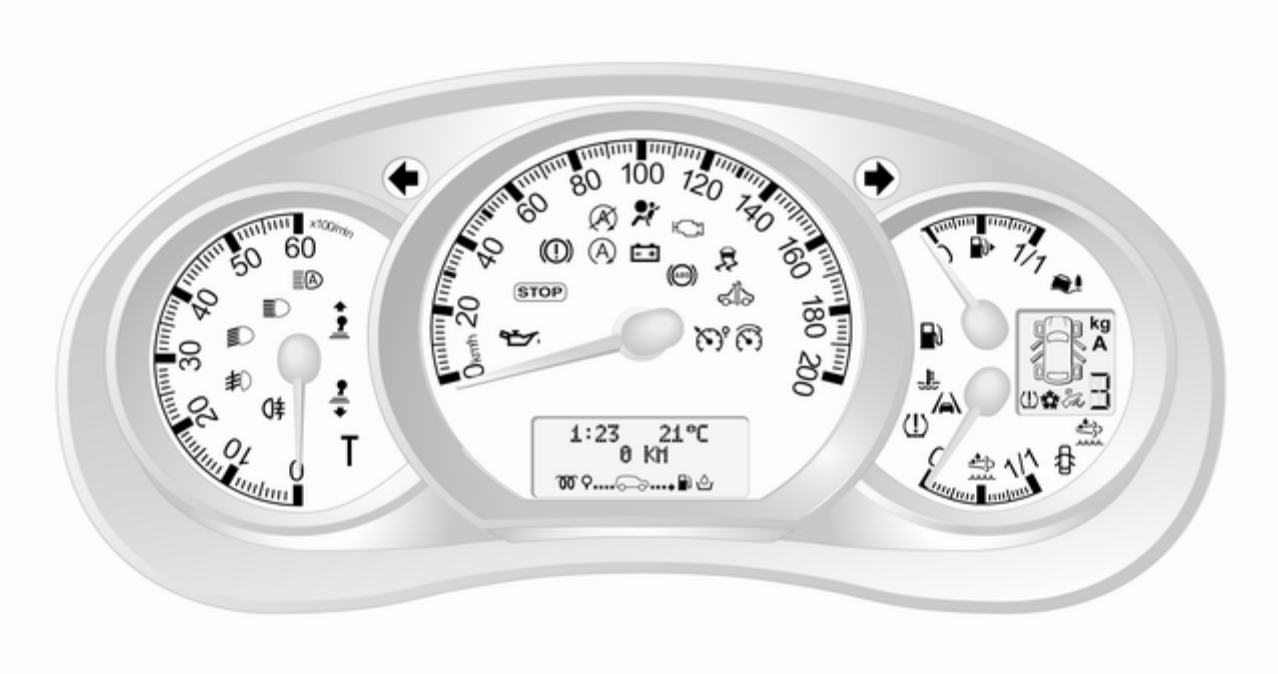

Control indicators in the instrument panel

Control indicators in the roof console

Overview

- Turn signal ⇨ 87
- Seat belt reminder ⇨ 87
- Airbag and belt tensioners ⇨ 87
- Airbag deactivation ⇨ 87
- Charging system ⇨ 88
- Malfunction indicator light ⇨ 88
- Service vehicle soon ⇨ 88
- Service display ⇨ 88
- STOP Stop engine ⇨ 89
- Brake system ⇨ 89
- Antilock brake system (ABS) ⇨ 89
- Upshift, downshift ⇨ 89
- Lane departure warning ⇨ 89
- Electronic Stability Program ⇨ 90
- Electronic Stability Program off ⇨ 90
- Engine coolant temperature ⇨ 90
- Preheating ⇨ 90
- AdBlue ⇨ 90
- Tyre pressure monitoring system ⇨ 90
- Engine oil pressure ⇨ 91
- Low fuel ⇨ 91
- Autostop ⇨ 123
- Autostop inhibited ⇨ 123
- Exterior light ⇨ 92
- High beam ⇨ 92
- High beam assist ⇨ 92
- Fog light ⇨ 92
- Rear fog light ⇨ 92
- Cruise control ⇨ 92

Cruise control speed limiter ⇨ 92

T Tachograph ⇨ 92

Door open ⇨ 92

Turn signal

⇦⇨ flashes green.

Flashes if a turn signal or the hazard warning flashers are activated.

Rapid flashing: failure of a turn signal light or associated fuse.

An audible warning can be heard when the turn signals are on. When towing a trailer, the pitch of the audible warning changes.

Bulb replacement ⇨ 168.

Fuses ⇨ 175.

Turn signals ⇨ 101.

Seat belt reminder

illuminates or flashes red.

If the seat belt is unfastened, control indicator will flash when vehicle speed exceeds approx. 16 km/h. A warning chime also sounds for approx. 90 seconds.

If the seat belt is fastened, the indicator light extinguishes.

⚠ Warning

Fasten seat belt before each trip.

In the event of an accident, people not wearing seat belts endanger their fellow occupants and themselves.

Three-point seat belts ⇨ 50.

Airbag and belt tensioners

illuminates yellow.

When the ignition is switched on, the control indicator illuminates briefly. If it does not illuminate or illuminates whilst driving, there is a fault in the airbag system. Seek the assistance of a workshop. The airbags and belt pretensioners may fail to trigger in the event of an accident.

Deployment of the belt pretensioners or airbags is indicated by continuous illumination of .

⚠ Warning

Have the cause of the fault remedied immediately by a workshop.

Belt pretensioners, airbag system ⇨ 49, ⇨ 52.

Airbag deactivation

illuminates yellow when the ignition is switched on and remains illuminated when the front passenger airbag has been deactivated ⇨ 56.

⚠ Danger

Risk of fatal injury for a child using a child restraint system together with activated front passenger airbag.

Risk of fatal injury for an adult person with deactivated front passenger airbag.

Airbag system ⇨ 52, belt tensioners ⇨ 49, airbag deactivation ⇨ 56.

Charging system

illuminates red.

Illuminates when the ignition is switched on and extinguishes shortly after the engine starts.

Illuminates when the engine is running

Stop, switch off engine. Vehicle battery is not charging. Engine cooling may be interrupted. The brake servo unit may cease to be effective. Seek the assistance of a workshop.

Malfunction indicator light

illuminates or flashes yellow.

Illuminates briefly when the ignition is switched on.

Illuminates when the engine is running

Fault in the emission control system. The permitted emission limits may be exceeded. Seek the assistance of a workshop immediately.

If illuminates in combination with , stop vehicle and switch off engine as soon as possible.

⚠ Warning

Have the cause of the fault remedied immediately by a workshop.

Flashes when the engine is running

Fault that could lead to catalytic converter damage. Ease up on the accelerator until the flashing stops. Seek the immediate assistance of a workshop.

Service vehicle soon

illuminates yellow.

Illuminates briefly when the ignition is switched on.

The vehicle needs a service.

May illuminate in combination with another control indicator or a message in the Driver Information Centre (DIC) ⇨ 93.

Illuminates if cleaning of the diesel particle filter is required and automatic cleaning does not occur ⇨ 128.

⚠ Warning

Have the cause of the fault remedied immediately by a workshop.

Service display

Control indicator also illuminates in the DIC when the remaining distance before the next service reaches 0 km or the service date is due.

The message **SERVICE DUE** also appears in the DIC.

Service display ⇨ 83.

Stop engine

STOP illuminates red.

Illuminates briefly when the ignition is switched on.

If STOP illuminates (possibly in combination with and/or), stop vehicle and switch off engine as soon as possible.

⚠ Warning
Have the cause of the fault remedied immediately by a workshop.

Depending on the type of fault, a warning message may also appear in the Driver Information Centre (DIC) ⇨ 93.

Brake system

illuminates red.

Control indicator remains illuminated after the ignition is switched on if the parking brake is applied and extinguishes when the parking brake is released ⇨ 139.

When the parking brake is released, illuminates (possibly in combination with STOP) if the brake fluid level is too low ⇨ 164.

⚠ Warning
Stop. Do not continue your journey. Consult a workshop.

Brake system ⇨ 138.

Antilock brake system (ABS)

ABS illuminates yellow.

Illuminates briefly when the ignition is switched on. The system is ready for operation when ABS extinguishes.

If control indicators ABS and illuminate with the messages **CHECK ABS** and **CHECK ESP** in the Driver Information Centre (DIC) ⇨ 93, there is a fault in the ABS. The brake system remains operational but without ABS regulation.

If control indicators ABS, , and STOP illuminate, the ABS and ESP are deactivated and the message **BRAKING FAULT** is displayed. Seek the assistance of a workshop.

Antilock brake system ⇨ 138.

Upshift

or illuminates yellow.

Illuminates when gearshifting is recommended for fuel saving reasons.

ECO mode ⇨ 120.

Lane departure warning

illuminates white.

Illuminates briefly when the ignition is switched on and the system is ready to operate.

A warning chime sounds in conjunction with when the system recognises an unintended lane change.

Lane departure warning ⇨ 151.

Electronic Stability Program

flashes or illuminates yellow.

Illuminates briefly when the ignition is switched on.

Flashing during driving

The system is actively engaged. Engine output may be reduced and the vehicle may be braked automatically to a small degree ⇨ 142.

Illuminates during driving

The system is unavailable.

May illuminate together with control indicator ⇨ 88. A corresponding message also appears in the Driver Information Centre (DIC) ⇨ 93.

ESP®Plus ⇨ 142, Traction Control system ⇨ 141.

Electronic Stability Program off

illuminates green.

If ESP®Plus has been deactivated with on the instrument panel, control indicator illuminates and a corresponding message appears in the Driver Information Centre (DIC) ⇨ 93.

ESP®Plus ⇨ 142, Traction Control system ⇨ 141.

Engine coolant temperature

illuminates red.

Illuminates briefly when the ignition is switched on.

Illuminates when the engine is running

If illuminates (possibly in combination with control indicator STOP), stop vehicle and switch off engine.

Caution
Coolant temperature too high.

Check coolant level ⇨ 162.

If there is sufficient coolant, consult a workshop.

Preheating

illuminates yellow.

Preheating is activated. Only activates when outside temperature is low.

AdBlue

illuminates yellow.

AdBlue level is low. Refill AdBlue as soon as possible, to avoid prevention of engine starts.

Illuminates together with control indicator to indicate a system failure or as a warning that engine starting may not be possible after a certain distance. Seek the assistance of a workshop immediately.

A corresponding message appears in the Driver Information Centre (DIC) ⇨ 93.

AdBlue ⇨ 129.

Tyre pressure monitoring system

illuminates or flashes yellow.

Illuminates briefly when the ignition is switched on.

Illuminates

Tyre pressure loss. Stop immediately and check tyre pressure.

Control indicator (!) illuminates together with STOP ⇨ 89 and a corresponding message appears in the Driver Information Centre (DIC) when a puncture or severely under-inflated tyre is detected.

Flashes

Fault in system. After a delay the control indicator illuminates continuously. Consult a workshop.

Control indicator (!) illuminates together with ⇨ 88 and a corresponding message appears in the DIC when a tyre without a pressure sensor is mounted (e.g. spare wheel).

Tyre pressure monitoring system ⇨ 183.

Engine oil pressure

illuminates red.

Illuminates briefly when the ignition is switched on.

Illuminates when the engine is running

Caution

Engine lubrication may be interrupted. This may result in damage to the engine and/or locking of the drive wheels.

1. Depress clutch.
2. Select neutral gear, set selector lever to **N**.
3. Move out of the flow of traffic as quickly as possible without impeding other vehicles.
4. Switch off ignition.

⚠Warning

When the engine is off, considerably more force is needed to brake and steer. During an Autostop the brake servo unit will still be operational.

Do not remove key until vehicle is stationary, otherwise the steering wheel lock could engage unexpectedly.

Check oil level before seeking assistance of a workshop ⇨ 161.

Low fuel

illuminates yellow.

Illuminates when the ignition is switched on and extinguishes shortly after the engine starts.

Illuminates when the engine is running

Fuel level in the tank is too low. Refuel immediately.

Never run the tank dry.

Refuelling ⇨ 153.

Catalytic converter ⇨ 128.

Bleeding the diesel fuel system ⇨ 167.

Stop-start system

Illuminates when an Autostop is inhibited when certain conditions are not fulfilled.

Ⓐ illuminates or flashes yellow / green.

Illuminates

Illuminates green during an Autostop.

If Ⓐ illuminates yellow there is a fault in the stop-start system. Seek the assistance of a workshop.

Flashes

Flashes green during an automatic restart.

Stop-start system ⇨ 123.

Exterior light

illuminates green.

Illuminated when the exterior lights are on ⇨ 98.

High beam

illuminates blue.

Illuminated when high beam is on and during headlight flash ⇨ 99.

High beam assist

illuminates when the high beam assist is activated ⇨ 99.

Fog light

illuminates green.

Illuminated when the front fog lights are on ⇨ 101.

Rear fog light

illuminates yellow.

Illuminated when the rear fog light is on ⇨ 102.

Cruise control

, illuminates green or yellow.

illuminates green when a certain speed is stored.

illuminates green when the system is on.

Speed limiter

illuminates yellow.

illuminates yellow when the system is on.

Cruise control, Speed limiter ⇨ 143.

Tachograph

T illuminates when there is a fault ⇨ 97.

Door open

illuminates yellow.

Illuminates with the ignition switched on when a door or the load compartment is open.

Depending on version, control indicator also illuminates in transmission display, indicating relevant open door.

Information displays

Driver Information Centre

The Driver Information Centre (DIC) is located in the instrument cluster below the speedometer.

Depending on vehicle configuration, the following items appear in the display:

- outside temperature ⇨ 78
- clock ⇨ 78
- odometer, trip odometer ⇨ 81
- engine oil level monitor ⇨ 82
- service display ⇨ 83
- vehicle messages ⇨ 93
- trip computer ⇨ 95

Some of the displayed functions differ when the vehicle is being driven or at a standstill. Some functions are only available when the vehicle is being driven.

Info display

Displays time, outside temperature and Infotainment system information when the ignition is on.

For further information, see Infotainment manual.

Vehicle messages

Messages appear in the Driver Information Centre (DIC), in combination with control indicator ⚠ or STOP.

Information messages

Information messages
BATTERY MODE: ECONOMY
ESP OFF
AUTO LIGHTS DEACTIVATED
OIL LEVEL CORRECT

Fault messages

Displayed in combination with control indicator ⚠. Drive with caution and seek the assistance of a workshop.

To remove fault message, press button on end of wiper lever. After a few seconds the message may disappear automatically and ⚠

remains illuminated. The fault will then be stored in the on board system.

Fault messages
CHECK ESP
CHECK FUEL FILTER
CHECK GEARBOX
CHECK AUTO LIGHTS

Warning messages

These may appear with control indicator STOP or in combination with other warning messages, control indicators or an audible warning. Stop engine immediately and seek the assistance of a workshop.

Warning messages
INJECTION FAULT
ENGINE OVERHEATING
GEARBOX OVERHEATING

Tyre pressure monitoring system ⇨ 183.

Warning chimes

When starting the engine or whilst driving

Only one warning chime will sound at a time.

The warning chime regarding unfastened seat belts has priority over any other warning chime.

- If seat belt is not fastened ⇨ 50.
- If a certain speed is exceeded with the parking brake applied ⇨ 139.
- If the parking assist detects an object or a fault is present ⇨ 147.
- If the vehicle has manual transmission automated and the clutch temperature is too high ⇨ 135.
- If the vehicle speed briefly exceeds a set limit ⇨ 80.
- During closing of the power sliding door ⇨ 27.
- If the sliding door is open and the parking brake is released ⇨ 27.
- During activation and deactivation of alarm monitoring of vehicle inclination ⇨ 32.
- If the AdBlue level falls below a certain amount or a fault is present ⇨ 129.
- If the lane departure warning system detects an unintended lane change and when the system is activated ⇨ 151.

When the vehicle is parked and/or the driver's door is opened

- When the key is in the ignition switch.
- With exterior lights on.
- If the vehicle has manual transmission automated ⇨ 135; the parking brake has not been applied, neutral is not selected or the brake pedal has not been depressed. A corresponding message may also appear in the Driver Information Centre (DIC) ⇨ 93.

- If the sliding side door exterior handle is in the open position when unlocking the vehicle ⇨ 27.
- If the engine is in an Autostop but not switched off. Stop-start system ⇨ 123.

Trip computer

The trip computer provides information on driving data, which is continually recorded and evaluated electronically.

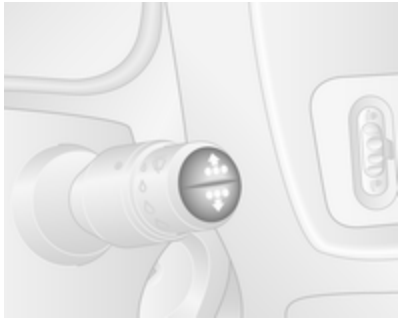

Depending on vehicle, the following functions can be selected by pressing button repeatedly on end of wiper lever:

- fuel used
- average consumption
- instantaneous consumption
- range
- distance travelled
- average speed
- distance before service ⇨ 83
- clock ⇨ 78
- odometer ⇨ 81, trip odometer ⇨ 81
- cruise control and speed limiter stored speed ⇨ 143
- fault and information messages

Fuel used

Displays the amount of fuel consumed since the last reset.

The measurement can be restarted at any time by pressing and holding the button on the end of the wiper lever.

Average consumption

The value is displayed after driving a distance of 400 metres.

Average consumption is displayed, taking into consideration the distance travelled and the fuel used since the last reset.

The measurement can be restarted at any time.

Instantaneous consumption

The value is displayed after reaching a speed of 30 km/h.

Range

The value is displayed after driving a distance of 400 metres.

The range is calculated from the current contents of the fuel tank and the average consumption since the last reset.

The range will not display if control indicator ⛽ is illuminated in the instrument cluster ⇨ 91.

The measurement can be restarted at any time.

Distance travelled

Displays the distance driven since the last reset.

The measurement can be restarted at any time.

Average speed

The value is displayed after driving a distance of 400 metres.

The average speed since the last reset is displayed.

The measurement can be restarted at any time.

Interruptions in the journey with the ignition off are not included in the calculations.

Reset trip computer information

To reset the trip computer, select one of its functions then press and hold button on end of wiper lever.

The following trip computer information will be reset:

- fuel used
- average consumption
- range
- distance travelled
- average speed

The trip computer will reset automatically when the maximum value of any of the parameters is exceeded.

Fuel economy rating (ecoScoring)

If equipped, a rating of 0 to 100 is shown in the display to help evaluate fuel efficiency, based on your driving style.

Higher ratings indicate better fuel economy.

Tips to improve fuel economy are also given in the display. Journeys can be saved in the system memory, enabling you to compare performances. Refer to Infotainment system manual for further information.

Vehicle messages ⇨ 93.

Journey record

When the engine is switched off, a record of the last journey is shown in the display.

The following information is displayed:

- average fuel consumption
- trip odometer
- fuel saved in km

Interruption of power supply

If the power supply has been interrupted or if the vehicle battery voltage has dropped too low, the values stored in the trip computer will be lost.

Tachograph

The tachograph is operated as described in the operating instructions supplied. Observe regulations regarding use.

Control indicator T illuminates in the instrument cluster in the event of a fault. Seek the assistance of a workshop.

Note

When a tachograph is fitted, the total distance travelled may be shown only on the tachograph and not in the odometer within the instrument display.

Odometer ⇨ 81.

Lighting

Exterior lighting **98**
Light switch 98
Automatic light control 98
High beam 99
High beam assist 99
Headlight flash 100
Headlight range adjustment 100
Headlights when driving abroad 100
Daytime running lights 100
Adaptive forward lighting 101
Hazard warning flashers 101
Turn and lane-change signals . 101
Front fog lights 101
Rear fog lights 102
Reversing lights 102
Misted light covers 102
Interior lighting **102**
Interior lights 102
Load compartment lighting 103
Reading lights 103
Lighting features **104**
Exit lighting 104
Battery discharge protection 105

Exterior lighting

Light switch

Turn outer light switch:

0 : off
☼ : sidelights
≣D ≣D : headlights
AUTO : automatic light control: headlights are switched on and off automatically.

Turn inner light switch:

⚡D : front fog lights
D⚡ : rear fog lights

High beam control indicator ≣D ⇨ 92.

Low beam control indicator ≣D ⇨ 92.

Tail lights

Tail lights are illuminated together with low beam and sidelights.

Automatic light control

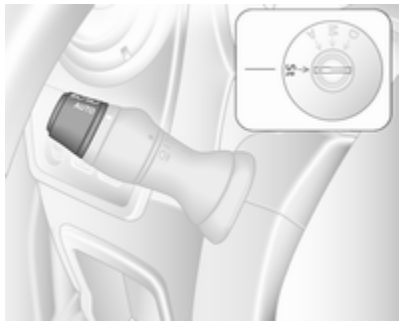

When the automatic light control function is switched on and the engine is running, the system switches between daytime running lights (where fitted) and headlights, depending on the lighting conditions.

For reasons of safety, the light switch should always remain in the **AUTO** position.

Daytime running lights ⇨ 100.

Automatic headlight activation

During poor lighting conditions the headlights are switched on.

High beam

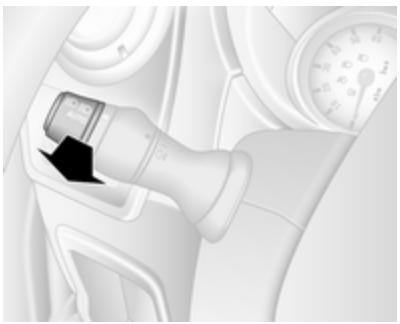

To change between low and high beam, pull lever until a click is felt.

High beam assist

This feature allows high beam to function as the main driving light at night and when vehicle speed is faster than 45 km/h.

It switches to low beam when:

- A sensor detects the lights of oncoming or preceding vehicles.
- It is foggy or snowy.
- Driving in urban areas.

If there are no restrictions detected, the system switches back to high beam.

Activation

Turn the outer light switch to **AUTO** then push the turn signal lever forwards to activate high beam assist.

The control indicator illuminates continuously in the instrument cluster when the assist is activated, while the blue control indicator ⇨ 92 illuminates when high beam is on.

Control indicator ⇨ 92.

Note
Use of the system does not relieve the driver from full responsibility for vehicle operation.

Deactivation

Push the turn signal lever forwards again. Control indicator extinguishes.

High beam assist is also deactivated when the outer light switch is moved out of the AUTO position.

Note
Depending on version, the system can be also be deactivated via the Infotainment system. Refer to Infotainment system manual for further information.

General information

Performance of the system can be affected due to the following:

- Extreme weather conditions, e.g. heavy rain, fog or snow.
- The front camera or the windscreen is obstructed.
- Oncoming or preceding vehicle lights are not detected.
- Headlights are not adjusted correctly.
- Various reflective surfaces may also cause the system to fail to detect other vehicles.

Headlight flash

To activate the headlight flash, pull lever.

Headlight range adjustment

Manual headlight range adjustment

With low beam switched on, adapt the headlight range to suit the vehicle load to prevent dazzling of oncoming traffic.

Turn knurled wheel to required position:

0 : front seat occupied
4 : loaded up to permissible maximum weight

Headlights when driving abroad

The asymmetrical headlight beam extends visibility at the edge of the road at the passenger side.

However, when driving in countries where traffic drives on the opposite side of the road, adjust the headlights to prevent dazzling of oncoming traffic.

Have the headlights adjusted by a workshop.

Daytime running lights

Daytime running lights increase visibility of the vehicle during daylight.

The lights operate automatically when the ignition is switched on.

If the vehicle is equipped with the automatic light control function, the system switches between daytime running lights and headlights automatically depending on the lighting conditions. Automatic light control ⇨ 98.

Adaptive forward lighting

Cornering light

Depending on the steering angle, vehicle speed and gear selected when cornering, an additional light will illuminate the corner of the road on the respective side.

The cornering light is switched off automatically after prolonged use and at vehicle speeds above 40 km/h.

Hazard warning flashers

Operated by pressing ⚠.

In the event of hard braking, the hazard warning flashers may turn on automatically. Switch off by pressing ⚠.

Turn and lane-change signals

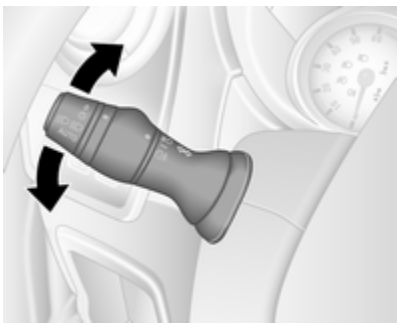

lever up : right turn signal
lever down : left turn signal

When the steering wheel is turned back, the lever automatically returns to its original position and the indicator is deactivated. This will not happen when making a minor steering manoeuvre such as lane changing.

For three flashes, e.g. when changing lanes, move lever part way to first stop. When released, lever will spring back.

If the lever is moved past the first stop, the indicator is switched on constantly. Switch the indicator off manually by moving the lever to its original position.

Front fog lights

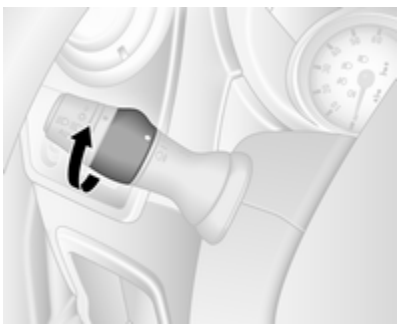

Turn inner switch to position ≢D and release.

Front fog lights operate with engine running and headlights switched on.

Rear fog lights

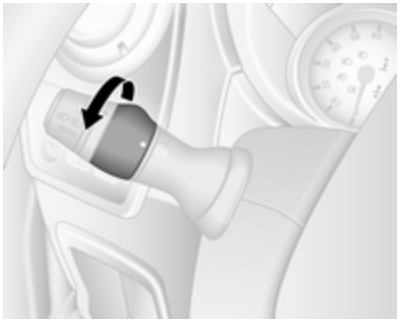

Turn inner switch to position ⌀ and release.

Rear fog lights operate with engine running and headlights switched on.

Reversing lights

The reversing lights come on when the ignition is on and reverse gear is selected.

Misted light covers

The inside of the light covers may mist up briefly in poor, wet and cold weather conditions, in heavy rain or after washing. The mist disappears quickly by itself; to help, switch on the headlights.

Interior lighting

Interior lights

Courtesy lights illuminate when the vehicle is unlocked with the remote control or the front doors are opened.

When the doors are closed, the courtesy light extinguishes after a delay or immediately after the ignition is switched on.

Front courtesy light

With the switch in its central position, the light functions as a courtesy light.

Operated by pressing the switch ⚹:

- on constantly
- on when the doors are unlocked and opened
- off constantly

Rear courtesy lights

Combi, Bus

Low level and overhead courtesy lights are located in the rear passenger compartment.

Operate rocker switch on the instrument panel:

press **OFF** : off
press ⚹ : on

Reading lights ⚹ ⇨ 103.

Load compartment lighting

Load compartment lighting can be set to illuminate when the side and rear doors are opened, or switched on constantly.

With the switch in its central position, the light functions as a courtesy light.

Operated by pressing the switch ⚹:

- on constantly
- on when the doors are unlocked and opened
- off constantly

When the doors are closed, the courtesy light extinguishes after a delay or immediately after the ignition is switched on.

Reading lights

Front reading light

Operated with ⚹.

The reading light can be directed as required, depending on version.

Rear reading lights

Combi, Bus

Operate rocker switch on the instrument panel:

press : on
press **OFF** : off

Courtesy lights ⇨ 102.

Each reading light can then be switched on or off individually and directed as required.

Lighting features

Exit lighting

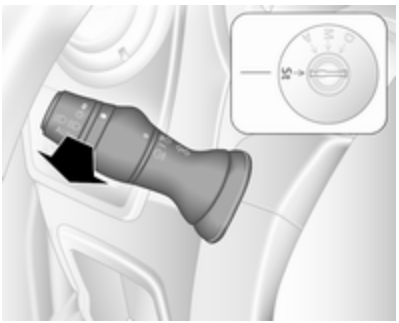

Headlights come on for approx. 30 seconds after the vehicle is parked and the system is activated.

Activating

1. Switch off ignition.
2. Remove ignition key.
3. Pull turn signal lever towards steering wheel.

This action can be repeated up to four times.

The headlights are turned off immediately by turning the light switch to any position and returning to **O**.

Battery discharge protection

To prevent discharge of the vehicle battery when the ignition is switched off, some interior lights may be switched off automatically after some time.

Climate control

Climate control systems **106**
Heating and ventilation system 106
Air conditioning system 107
Electronic climate control system 108
Rear heating system 110
Rear air conditioning system ... 111
Auxiliary heater 112
Air vents **116**
Adjustable air vents 116
Fixed air vents 117
Glovebox cooler 117
Maintenance **117**
Air intake 117
Pollen filter 117
Air conditioning regular operation 118
Service 118

Climate control systems

Heating and ventilation system

Controls for:

- temperature
- fan speed
- air distribution
- demisting and defrosting

Heated rear window ⇨ 38, Heated seats ⇨ 46.

Temperature

red : warm
blue : cold

Heating will not be fully effective until the engine has reached normal operating temperature.

Fan speed

Adjust the air flow by switching the fan to the desired speed.

Air distribution

: to head area
: to head area and foot well
: to foot well
: to windscreen, front door windows and foot well
: to windscreen and front door windows

Intermediate settings are possible.

Demisting and defrosting the windows

- Set temperature control to warmest level.
- Set fan speed to highest level.

- Set air distribution control to .
- Switch on heated rear window .
- Open side air vents as required and direct them towards door windows.
- For simultaneous warming of the foot well, set air distribution control to .

Air conditioning system

Additional to the heating and ventilation system, the air conditioning system has controls for:

A/C : cooling
 : air recirculation

Heated rear window ⇨ 38, Heated seats ⇨ 46.

Cooling (A/C)

Operated by pressing **A/C** and functional only when the engine and fan are running.

The air conditioning system cools and dehumidifies (dries) the air when outside temperature is a little above the freezing point. Therefore condensation may form and drip from under the vehicle.

If no cooling or drying is required, switch the cooling system off to save fuel.

Note
If the climate control is set to maximum cooling while the ambient temperature is high, an Autostop may be inhibited until the required temperature in the passenger compartment has been reached.

If the climate control is set to maximum cooling while the engine is in an Autostop, the engine may restart automatically.

Stop-start system ⇨ 123.

Air recirculation system

Operated by pressing .

⚠ Warning

The exchange of fresh air is reduced in air recirculation mode. In operation without cooling the air humidity increases, so the windows may mist up. The quality of the passenger compartment air deteriorates, which may cause the vehicle occupants to feel drowsy.

Maximum cooling

Briefly open the windows so that hot air can disperse quickly.

- Cooling **A/C** on.
- Air recirculation system on.
- Set air distribution control to .
- Set temperature control to coldest level.
- Set fan speed to highest level.
- Open all air vents.

Demisting and defrosting the windows

- Switch cooling **A/C** on.
- Set temperature control to warmest level.
- Set fan speed to highest level.
- Set air distribution control to .
- Switch on heated rear window .
- Open side air vents as required and direct them towards door windows.
- For simultaneous warming of the foot well, set air distribution control to .

Note

If is pressed while the engine is running, an Autostop will be inhibited until is pressed again.

If is pressed while the engine is in an Autostop, the engine will restart automatically.

Stop-start system ⇨ 123.

Electronic climate control system

Controls for:

- temperature
- air distribution (or) and menu selection
- fan speed

AUTO	:	automatic mode
	:	air recirculation
	:	demisting and defrosting
	:	heated rear window, heated exterior mirrors
A/C OFF	:	switch off air conditioning

Heated rear window, heated exterior mirrors ⇨ 38, ⇨ 35, heated seats ⇨ 46.

The preselected temperature is automatically regulated. In automatic mode, the fan speed and air distribution automatically regulate the air flow.

The system can be manually adapted by use of air distribution and air flow controls.

The electronic climate control system is only fully operational when the engine is running.

For correct operation do not cover the sensor on the instrument panel.

Automatic mode

Basic setting for maximum comfort:

- Press **AUTO** ("AUTO" appears in the display).
- Set desired temperature (the temperature appears in the display).
- Open all air vents.

During automatic mode, the settings for fan speed, air distribution, air conditioning and air recirculation are automatically regulated by the system and are not shown on the display.

Temperature preselection

Temperatures can be set to the desired value with the 2 buttons below the display.

For reasons of comfort, change temperature only in small increments.

red : warm
blue : cold

Heating will not be fully effective until the engine has reached normal operating temperature.

If the minimum temperature of 15 °C is set, the electronic climate control system runs at maximum cooling.

If the maximum temperature of 27 °C is set, the electronic climate control system runs at maximum heating.

Note
If the temperature is to be reduced for climate comfort reasons, an Autostop can be inhibited or the engine will restart automatically when cooling is switched on.

Stop-start system ⇨ 123.

Fan speed

Fan speed can be increased or decreased with the ✠ buttons.

The selected fan speed is indicated with ✠ in the display.

If the fan is switched off the air conditioning is also deactivated.

To return to automatic mode: Press **AUTO**.

Demisting and defrosting the windows

Press ⛆. LED illuminates.

Temperature and air distribution are set automatically, air conditioning is switched on and the fan runs at a high speed.

To return to automatic mode: press ⛆ or **AUTO**.

Note
If ⛆ is pressed while the engine is running, an Autostop will be inhibited until ⛆ is pressed again.

If ⛆ is pressed while the engine is in an Autostop, the engine will restart automatically.

Stop-start system ⇨ 123.

Air distribution

Press ⤷ or ⤷ repeatedly.

Arrows shown in the display indicate the distribution settings:

⤷ : to windscreen and front door windows
⤷ : to windscreen, front door windows and foot well
⤷ : to head area
⤷ : to head area and foot well
⤷ : to foot well

To return to automatic mode: Press **AUTO**.

Cooling

The air conditioning system cools and dehumidifies (dries) when outside temperature is above a specific level. Therefore condensation may form and drip from under the vehicle.

If no cooling or drying is required press **A/C OFF** to switch the cooling system off, thus saving fuel.
"**A/C OFF**" appears in the display.

Manual air recirculation mode

Press ⟲. LED illuminates and ⟲ appears in the display.

> **⚠ Warning**
>
> The exchange of fresh air is reduced in air recirculation mode. In operation without cooling the air humidity increases, so the windows may mist up. The quality of the passenger compartment air deteriorates, which may cause the vehicle occupants to feel drowsy.

To return to automatic mode: press ⟲ or **AUTO**.

Rear heating system

If the engine is switched off, the rear compartment can be heated by the additional heating, through low level vents.

By programming values using the control panel, the user can adjust the time, day and temperature settings.

Heating will cease to operate if the vehicle fuel level drops too low.

During operation, power from the vehicle battery is used. For short journey times, check the vehicle battery regularly and recharge if necessary.

To ensure efficient performance, the low level air vents in the rear passenger compartment must not be obstructed.

> **⚠ Warning**
>
> Do not operate the system when refuelling, when dust or combustible vapours are present or in enclosed spaces (e.g. garage).

Setting the time and day

Press ◷ until the time display flashes.

If the vehicle battery supply has been interrupted prior to its use, press ◁ or ▷ briefly to make the time display flash.

Adjust the time by pressing ◁ or ▷.

The time is set when the displayed time stops flashing.

The display for the day will then flash: adjust the day by pressing ◁ or ▷.

The day is set when the display stops flashing.

The display will remain illuminated for approx. 15 seconds after the ignition is switched off.

Operating the rear compartment additional heating

Press ⧚ to operate heating. ⧚ will appear in the display to indicate that the heating is operating.

Changing the period for which heating is operating

With the heating switched off (⧚ extinguished in display), press ⊲ for approx. 3 seconds until the time period for which heating is provided flashes in the display.

Press ⊲ or ⊳ to adjust the heating duration. The duration is set when the display extinguishes.

Programming the heating mode

It is possible to store up to three programmes which allow the heating to be switched on.

Press **P** the appropriate number of times to select the desired stored programme.

Press ⊲ or ⊳ briefly; the programming time flashes in the display.

Press ⊲ or ⊳ to adjust to the desired time, then, as soon as the time display stops flashing, adjust the day by pressing ⊲ or ⊳.

The time and day are set when the display stops flashing and the clock is displayed.

Recalling a programming mode

To activate a stored programme, press **P** the appropriate number of times until the corresponding number appears on the display.

Neutral position or no stored programme activated

Press **P** until there is no stored programme number visible in the display.

Adjusting the temperature

To adjust the temperature of the heating, turn the rotary knob located on the control panel.

turn clockwise	:	increase temperature
turn anti-clockwise	:	decrease temperature

Rear air conditioning system

The rear air conditioning system is actuated in conjunction with the front passenger compartment air conditioning system.

Bus

Rear air vents

Additional air conditioning is supplied to the rear passenger compartment via the overhead air vents.

Fan speed

Adjust the air flow to select the desired speed.

turn clockwise : increase air flow
turn anti-clockwise : decrease air flow

Combi

Additional air conditioning is supplied to the rear passenger compartment via the air vents located above the driver and front passenger compartment.

With the front passenger compartment air conditioning system switched on, adjust the air flow to select the desired speed.

Ensure the air vents are open when in use, to prevent ice forming in the system due to lack of air movement.

Auxiliary heater

Coolant heater

The Eberspächer engine-independent, fuel-powered coolant heater provides rapid heating of the engine coolant to enable heating of the vehicle interior without the engine running.

⚠ Warning

Do not operate the system when refuelling, when dust or combustible vapours are present or in enclosed spaces (e.g. garage).

Before starting or programming the system to start, turn the vehicle's climate control system to heat, set the air distribution to and turn the fan on.

Switch off when not required. Heating stops automatically after the programmed runtime. It will also cease to operate if the vehicle fuel level drops too low.

During operation, power from the vehicle battery is used. The driving time should therefore be at least as long as the heating time. For short journey times, check the vehicle battery regularly and recharge if necessary.

To ensure efficient performance, briefly operate the auxiliary heater once a month.

Control units

The timer or remote control unit turns the system on and off, and is used to programme specific departure times.

Timer

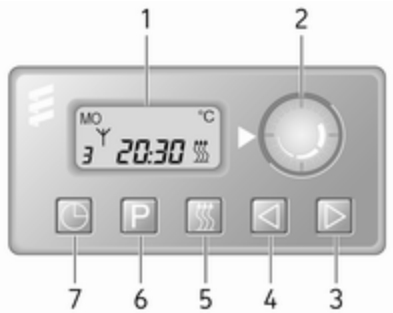

1 Display : Displays preset, weekday or preset day, current time or preset time, temperature, 🍸 and ♨

2 Temperature : Selects temperature

3 ► : Adjusts values up

4 ◄ : Adjusts values down

5 ♨ : Selects heat settings

6 P : Selects preset settings

7 ◷ : Selects time and weekday settings

Remote control (Type A)

1 Display : Displays preset, current time or preset time, temperature, 🍸, 🔋, ♨, ◷ and ✂

2 ▬ : Long press: switch heater on, short press: turns display on or confirms selection

3 ► : Adjusts values up

4 ▭ : Long press: switch heater off, short press: exit menu or turns display off

5 ◄ : Adjusts values down

If no buttons are pressed within 10 seconds the display automatically turns off.

Remote control (Type B)

1 Display : Displays preset, current time or preset time, temperature, 🍸, 🔋, ♨, ◷ and ✂

2 ► : Adjusts values up

3 OFF : Switch heater off, or press ♨ and **OFF** simultaneously to confirm selection

4 ♨ : Switch heater on, or press ♨ and **OFF** simultaneously to confirm selection

5 ◄ : Adjusts values down

If no buttons are pressed within 30 seconds the display automatically turns off.

⚠Warning

When refuelling, switch off the remote control unit as well as the heater!

The remote control has a maximum range of 1000 metres. The range may be reduced due to environmental conditions and as the battery becomes weaker.

In addition to a remote control unit, the heating can also be switched on for 30 minutes, or off, using the button on the instrument panel.

Battery replacement

Replace the battery when the range of the remote control is reduced or when the battery charge symbol flashes.

Open the cover and replace the battery (Type A: CR 2430, Type B: 2CR 11108, or equivalent), ensuring the new battery is correctly installed with the positive (+) side facing the positive terminals. Replace the cover securely.

Dispose of old batteries in accordance with environmental regulations.

Batteries do not belong in household waste. They must be disposed of at an appropriate recycling collection point.

Remote control fault displays

Y	: poor signal – adjust position
Y	: no signal – move closer
▭	: battery low – change battery
♨	: system error – consult workshop
Add, AddE	: system in learning mode

Teach remote control

If the vehicle battery is reconnected, the LED in the instrument panel button illuminates and the system configures the remote control menu automatically. If the LED flashes, select **Add** or **AddE** and confirm.

Additional remote control units may also be configured. Press the button until LED flashes, switch on the remote control, select **Add** and confirm.

AddE teaches the current remote control unit exclusively and blocks all previously configured units. **Add** teaches up to 4 remote control units, but only one unit can operate the system at any one time.

Operation

Heating ⧚

Press ⧚, the predetermined heating duration, e.g. **30** is displayed.

To temporarily adjust the heating duration, adjust with ◄ or ►. The value can be set from 10 to 120 minutes. Due to the power consumption, note the heating duration.

To switch off, press ⧚.

To change the default predetermined heating duration, ensure the heater is switched off, press and hold ◄ until the display flashes and adjust with ◄ or ►.

Programming P

Up to 3 preset departure times during one day, or one preset departure time over one week can be programmed.

- Press **P** once to select preset memory number **1**.
- Press **P** twice to select preset memory number **2**.
- Press **P** three times to select preset memory number **3**.
- Press **P** again to exit the preset memory.

Start heating within 24 hours

- Press **P** to select desired preset memory number **1**, **2** or **3**.
- Briefly press ◄ or ►; the preset time flashes.
- Adjust the preset time with ◄ or ►.
- Press **P** to confirm and exit the preset memory.

Start heating up to 7 days

- Press **P** to select desired preset memory number **1**, **2** or **3**.
- Briefly press ◄ or ►; the preset time flashes.
- Adjust the preset time with ◄ or ►.
- After 5 seconds the preset day flashes.
- Adjust the preset day with ◄ or ►.
- The preset time and day are set once the display changes to the current time.

Set time and weekday ◷

If the vehicle battery is disconnected or its voltage is too low, the unit will need to be reset.

- Press ◷ until the time flashes.
- Press ◄ or ► to change the current time.

- Time is stored when the display stops flashing.
- Wait for weekday to flash.
- Press ◄ or ► to change the weekday.
- Weekday is stored when the display stops flashing.

Heating level

The preferred heating level for programmed departure times can be set between 10 to 30°C.

Adjust using the temperature preselection dial.

Air vents

Adjustable air vents

At least one air vent must be open while cooling is on in order to prevent the evaporator from icing up due to lack of air movement.

Centre air vents

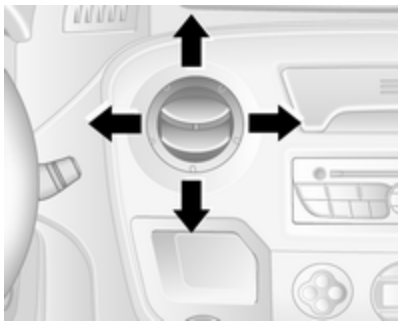

Press the vent to open.

Direct the flow of air by swivelling the vent.

Push vent to close.

Side air vents

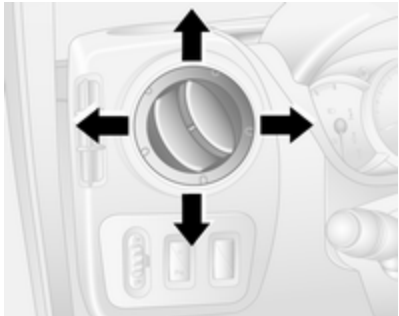

Press the vent to open.

Direct the flow of air by swivelling the vent.

Depending upon the position of the temperature control, air will be directed into the vehicle via the side air vents.

⚠Warning

Do not attach any objects to the slats of the air vents. Risk of damage and injury in the event of an accident.

Combi

Adjustable air vents may be located in the roof frame. To open, press air vent. Hold air vent and turn it to the required position to direct the airflow.

Bus

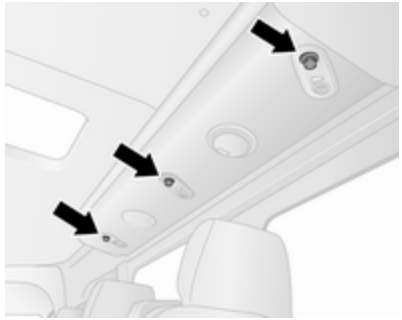

Adjustable air vents may be located in the roof frame above the seats. Turn adjuster to increase/decrease airflow to the appropriate seat.

Fixed air vents

Additional air vents are located beneath the windscreen and door windows and in the foot wells.

Glovebox cooler

The air conditioning system can also keep the contents of the glovebox cool.

Maintenance

Air intake

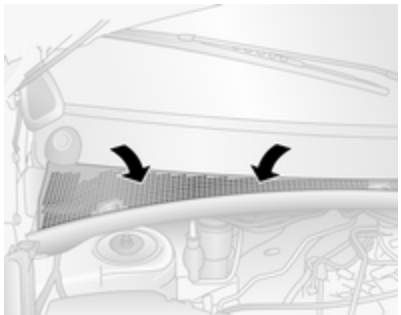

The air intake in front of the windscreen in the engine compartment must be kept clear to allow air intake. Remove any leaves, dirt or snow.

Pollen filter

The pollen filter cleans dust, soot, pollen and spores from the air entering the vehicle through the air intake.

Air conditioning regular operation

In order to ensure continuously efficient performance, cooling must be operated for a few minutes once a month, irrespective of the weather and time of year. Operation with cooling is not possible when outside temperature is too low.

Service

For optimal cooling performance, it is recommended that the climate control system be checked annually, starting three years after initial vehicle registration, including:

- functionality and pressure test
- heating functionality
- leakage check
- check of drive belts
- cleaning of condenser and evaporator drainage
- performance check

Driving and operating

Driving hints **120**
Driving economically 120
Control of the vehicle 120
Steering 120
Starting and operating **121**
New vehicle running-in 121
Ignition switch positions 121
Starting the engine 122
Idle speed control 122
Overrun cut-off 123
Stop-start system 123
Parking 125
Air suspension 126
Engine exhaust **128**
Diesel particle filter 128
Catalytic converter 128
AdBlue 129
Manual transmission **134**
Manual transmission automa-ted **135**
Transmission display 135
Starting the engine 135
Selector lever 135
Manual mode 136
Electronic driving programmes 137
Fault 138
Interruption of power supply 138
Brakes **138**
Antilock brake system 138
Parking brake 139
Brake assist 140
Hill start assist 140
Ride control systems **141**
Traction Control system 141
Electronic stability program 142
Driver assistance systems **143**
Cruise control 143
Speed limiter 146
Parking assist 147
Rear view camera 148
Lane departure warning 151
Fuel **152**
Fuel for diesel engines 152
Refuelling 153
Fuel consumption - CO_2-Emissions 154
Trailer hitch **154**
General information 154
Driving characteristics and towing tips 154
Trailer towing 155
Towing equipment 155
Trailer stability assist 156
Auxiliary features **156**
Power take-off 156

Driving hints

Driving economically

ECO mode

ECO mode is a function that optimises fuel consumption. It affects engine power and torque, acceleration, gear shift indication, heating, air conditioning and electrical consumers.

Activation

Press **ECO**. Control indicator illuminates when activated and a corresponding message appears in the Driver Information Centre (DIC) ⇨ 93.

During driving, it is possible to temporarily disable ECO mode, e.g. to increase engine performance, by depressing the accelerator pedal firmly.

ECO mode is reactivated when pressure is reduced on the accelerator pedal.

Deactivation

Press **ECO** again. Control indicator extinguishes.

Control of the vehicle

Never coast with engine not running (except during Autostop)

Many systems will not function in this situation (e.g. brake servo unit, power steering). Driving in this manner is a danger to yourself and others. All systems function during an Autostop, but there will be a controlled reduction in power steering assist and vehicle speed is reduced.

Stop-start system ⇨ 123.

Pedals

To ensure the pedal travel is uninhibited, there must be no mats in the area of the pedals.

Use only floor mats which fit properly and are fixed by the retainers on the driver's side.

Steering

If power steering assist is lost because the engine stops or due to a system malfunction, the vehicle can be steered but may require increased effort.

Caution
Vehicles equipped with hydraulic power steering: If the steering wheel is turned until it reaches the end of its travel, and is held in that position for more

than 15 seconds, damage may occur to the power steering system and there may be loss of power steering assist.

Starting and operating

New vehicle running-in

Do not brake unnecessarily hard for the first few journeys and after new disc brake pads have been fitted.

During the first drive, smoke may occur because of wax and oil evaporating off the exhaust system. Park the vehicle in the open for a while after the first drive and avoid inhaling the fumes.

During the running-in period fuel and engine oil consumption may be higher and the cleaning process of the diesel particle filter may take place more often. Autostop may be inhibited to allow for charging the vehicle battery.

Stop-start system ⇨ 123.

Diesel particle filter ⇨ 128.

Ignition switch positions

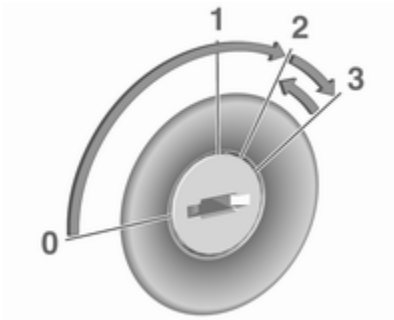

0 : ignition off
1 : steering wheel lock released, ignition off
2 : ignition on
diesel engines: preheating
3 : starting

Starting the engine

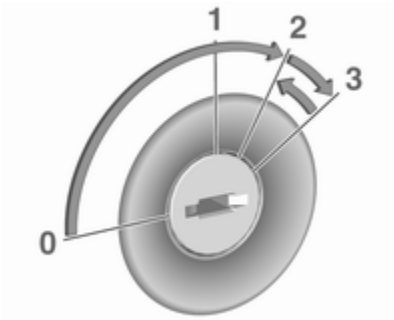

Manual transmission: operate clutch.

Manual transmission automated: operate brake; transmission automatically shifts to **N**.

Do not accelerate.

Turn the key to position **2** for preheating, and hold until control indicator extinguishes from the Driver Information Centre (DIC).

Turn key to position **3** and release.

The increased engine speed automatically returns to normal idling speed as the engine temperature rises.

Start attempts should not last longer than 15 seconds. If engine does not start, wait 15 seconds before repeating starting procedure. If necessary, depress accelerator before repeating starting procedure.

Before restarting or to switch off the engine, turn key back to **0**.

During an Autostop, the engine can be started by depressing the clutch pedal. Stop-start system ⇨ 123.

Turbo engine warm-up

Upon start-up, engine available torque may be limited for a short time, especially when the engine temperature is cold. The limitation is to allow the lubrication system to fully protect the engine.

Idle speed control

To increase the idle speed press the switch. After a few seconds the function will be activated.

The function will be deactivated when:

- The clutch pedal is depressed.
- The accelerator pedal is depressed.
- MTA is not in **N** (neutral).
- Vehicle speed is above 0 km/h.
- Control indicator , , or STOP illuminate in the instrument cluster.

To increase or decrease the fast idle speed rate, consult a workshop.

Note
When the fast idle function is activated, the stop-start system is automatically deactivated.

Stop-start system ⇨ 123.

Overrun cut-off

The fuel supply is automatically cut off during overrun, i.e. when the vehicle is driven with a gear engaged but accelerator is released.

Stop-start system

The stop-start system helps to save fuel and to reduce the exhaust emission. When conditions allow, it switches off the engine as soon as the vehicle is at a low speed or at a standstill, e.g. at a traffic light or in a traffic jam. It starts the engine automatically as soon as the clutch is depressed. A vehicle battery sensor ensures that an Autostop is only performed if the vehicle battery is sufficiently charged for a restart.

Activation

The stop-start system is available as soon as the engine is started, the vehicle starts-off and the conditions as stated below in this section are fulfilled.

Deactivation

Deactivate the stop-start system manually by pressing ⊛. Deactivation is indicated when the LED in the button illuminates.

Note
When the fast idle function is activated, the stop-start system is automatically deactivated and cannot be reactivated by pressing ⊛. LED in button illuminates to indicate deactivation and a corresponding message may appear in the Driver Information Centre (DIC) ⇨ 93.

Idle speed control ⇨ 122.

Autostop

If the vehicle is at low speed or standstill, activate an Autostop as follows:

- depress the clutch pedal
- shift the selector lever to neutral (manual transmission) or **N** (manual transmission automated)
- release the clutch pedal

The engine will be switched off while the ignition stays on if the required conditions are met.

An Autostop is indicated when Ⓐ illuminates green in the instrument cluster.

During an Autostop, the heating performance, power steering and brake performance will be maintained. Brake assist, however, is not available ⇨ 140.

Conditions for an Autostop

The stop-start system checks if each of the following conditions is fulfilled, otherwise an Autostop will be inhibited and control indicator ⓐ will illuminate in the instrument cluster.

- the stop-start system is not manually deactivated
- the bonnet is fully closed
- the driver's door is closed or the driver's seat belt is fastened
- the vehicle battery is sufficiently charged and in good condition
- the engine is warmed up
- the engine coolant temperature is not too high
- the ambient temperature is not too low
- the defrosting function is not activated
- the climate control system does not inhibit an Autostop
- the brake vacuum is sufficient
- the self-cleaning function of the diesel particle filter is not active
- the vehicle has moved since the last Autostop

Otherwise an Autostop will be inhibited.

An Autostop may become unavailable as the ambient temperature approaches freezing point.

Certain settings of the climate control system may also inhibit an Autostop. See "Climate control" chapter for further information ⇨ 106.

Immediately after motorway driving an Autostop may be inhibited.

Autostop may also be inhibited temporarily if the vehicle battery has been recharged by an external source.

New vehicle running-in ⇨ 121.

Vehicle battery discharge protection

To ensure reliable engine restarts, several vehicle battery discharge protection features are implemented as part of the stop-start system.

Restart of the engine by the driver

Depress the clutch pedal to restart the engine.

If the selector lever has been shifted out of neutral (manual transmission) or **N** (manual transmission automated) or other conditions are not met, start using the ignition key.

The green control indicator Ⓐ will extinguish in the instrument cluster when the engine is restarted.

If the selector lever is shifted out of neutral (manual transmission) or **N** (manual transmission automated) before depressing the clutch first, a restart will not take place.

Restart of the engine by the stop-start system

The selector lever must be in neutral (manual transmission) or **N** (manual transmission automated) to enable an automatic restart.

If one of the following conditions occurs during an Autostop, the engine will be restarted automatically by the stop-start system. Control indicator Ⓐ will flash green in the instrument cluster during an automatic engine restart.

- the stop-start system is manually deactivated
- the bonnet is opened
- the driver's seat belt is unfastened and the driver's door is opened
- the engine temperature is too low
- the vehicle battery is discharged
- the brake vacuum is not sufficient
- the vehicle starts to move
- the defrosting function is activated
- the climate control system requests an engine start
- the predetermined timing has been exceeded

If an electrical accessory, e.g. a portable CD player, is connected to the power outlet, a brief power drop during restart might be noticeable.

If the Infotainment system is active, audio sound may briefly be reduced or interrupted during the restart.

Warning chimes ⇨ 94.

Fault

If control indicator Ⓐ illuminates yellow, there is a fault in the stop-start system ⇨ 91. A corresponding message also appears in the DIC ⇨ 93. Seek the assistance of a workshop.

Parking

⚠ Warning

- Do not park the vehicle on an easily ignitable surface. The high temperature of the exhaust system could ignite the surface.
- Always apply parking brake without pressing release button. Apply as firmly as possible on a downhill slope or uphill slope. Depress brake pedal at the same time to reduce operating force.
- Switch off the engine.
- If the vehicle is on a level surface or uphill slope, engage

first gear. On an uphill slope, turn the front wheels away from the kerb.

If the vehicle is on a downhill slope, engage reverse gear. Turn the front wheels towards the kerb.

- Close the windows.
- Turn the ignition key to position **0** and remove it. Turn the steering wheel until the steering wheel lock is felt to engage.

Lock the vehicle ⇨ 22 and activate the anti-theft locking system ⇨ 32 and anti-theft alarm system ⇨ 32.

Air suspension

Operates automatically when the vehicle is driven. The air suspension system constantly adjusts the ride height according to the vehicle load.

Caution

To ensure safe operation of the air suspension system, do not exceed the maximum permissible gross vehicle weight rating. Refer to identification plate ⇨ 206 or the vehicle documents.

For further information on the air suspension system, refer to the operating instructions supplied.

Master switch

Caution

The air suspension system must be switched off when the vehicle is being towed, jump-started, raised off the ground or transported.

Do not switch off the air suspension system when driving.

Jump starting ⇨ 194, Towing the vehicle ⇨ 196.

The master switch is located on the door pillar.

Switch on to enable operation and adjustment of the air suspension system.

Remote control

When increased ground clearance or improved vehicle access is required, the suspension can be raised or lowered using the remote control.

Caution
Ensure there is adequate clearance and that there are no obstructions when adjusting the suspension height.

The remote control unit is magnetic and may be fixed to any metal part of the vehicle or stored in its holder.

With the engine running, press the appropriate button for 2 seconds to adjust the suspension height. Indicator light will flash intermittently while height adjustment is in progress and illuminates when complete.

If the ignition is switched on with engine not running, the suspension height can only be lowered.

Note
Handle with care, protect from moisture and high temperatures and avoid unnecessary operation.

Pre-programmed settings

Adjusts the suspension height to one of three pre-programmed positions.

: lowered position
: normal position
: raised position

Caution
If an obstacle is detected while raising or lowering, the suspension height is returned to the normal position after a delay. This does not guarantee damage-free operation. Ensuring sufficient clearance and freedom from obstacles is the responsibility of the driver.

Manual settings

Manual adjustment can only be performed when the vehicle is stationary.

Select by pressing ✋ for 2 seconds, then ▲ to raise, or ▼ to lower.

To exit, press any of the pre-programmed buttons.

Note
Obstacle detection is not available during manual adjustment.

When a certain low speed is exceeded or when the ignition is switched off, height adjustment is deactivated automatically and the suspension height is returned to the normal position.

Service mode

When the vehicle is stationary, press 🔧 for 5 seconds to put the vehicle into service mode. The indicator light will illuminate.

When service mode has been activated, the air suspension master switch must be turned off.

To exit service mode, press 🔧 again for 5 seconds.

Fault

If a fault is detected, 🔧 will flash intermittently. If service mode has been activated and there is a fault, ✋, ▼ and ▲ will flash simultaneously.

Have the cause of the fault remedied by a workshop.

Engine exhaust

⚠ Danger

Engine exhaust gases contain poisonous carbon monoxide, which is colourless and odourless and could be fatal if inhaled.

If exhaust gases enter the interior of the vehicle, open the windows. Have the cause of the fault rectified by a workshop.

Avoid driving with an open load compartment, otherwise exhaust gases could enter the vehicle.

Diesel particle filter

The diesel particle filter system filters harmful soot particles out of the exhaust gases. The system includes a self-cleaning function that runs automatically during driving without any notification.

The filter is cleaned by periodically burning off the soot particles at high temperature. This process takes place automatically under set driving conditions. Autostop is not available and fuel consumption may be higher during this period. The emission of smells and smoke during this process is normal.

Under certain driving conditions, e.g. short distances, the system cannot clean itself automatically.

If cleaning of the filter is required and if previous driving conditions did not enable automatic cleaning, it will be indicated by illumination of control indicator ⇨ 88. Seek the assistance of a workshop immediately.

Caution

If the cleaning process is interrupted, there is a risk of provoking severe engine damage.

Cleaning takes place quickest at high engine speeds and loads.

Catalytic converter

The catalytic converter reduces the amount of harmful substances in the exhaust gases.

Caution

Fuel grades other than those listed on page ⇨ 152, ⇨ 208 could damage the catalytic converter or electronic components.

Unburnt petrol will overheat and damage the catalytic converter. Therefore avoid excessive use of the starter, running the fuel tank dry and starting the engine by pushing or towing.

In the event of misfiring, uneven engine running, a reduction in engine performance or other unusual problems, have the cause of the fault rectified by a workshop as soon as possible. In an emergency, driving can be continued for a short period, keeping vehicle speed and engine speed low.

If control indicator flashes, the permitted emission limits may be exceeded. Lift your foot off the accelerator until stops flashing and is steadily illuminated. Contact a workshop immediately.

Malfunction indicator light ⇨ 88.

AdBlue

General information

The selective catalytic reduction (BlueInjection) is a method to substantially reduce the nitrogen oxides in the exhaust emission. This is achieved by injecting a Diesel Exhaust Fluid (DEF) into the exhaust system.

The designation of this fluid is AdBlue ®. It is a non-toxic, non-flammable, colourless and odourless fluid which consists of 32% urea and 68% water.

Note
AdBlue ® is a registered trademark of the Verband der Automobilindustrie e.V. (VDA).

⚠ Warning

Avoid contact of your eyes or skin with AdBlue.

In case of eye or skin contact, rinse off with water.

Caution

Avoid contact of the paintwork with AdBlue.

In case of contact, rinse off with water.

AdBlue freezes at a temperature of approx. -11 °C. As the vehicle is equipped with an AdBlue pre-heater, the emissions reduction at low temperatures is ensured. The AdBlue pre-heater works automatically.

Adblue gauge

The current fluid level remaining is shown in the Adblue gauge ⇨ 81.

Level warnings

The AdBlue consumption is approx. 1.5 litres per 1000 km and depends on the driving behaviour.

Version with level warnings in the Driver Information Centre

If the AdBlue level falls below a certain value, a level warning will be displayed in the Driver Information Centre ⇨ 93.

Additionally, control indicator illuminates continuously together with a warning chime.

Refill the Adblue tank as soon as possible. Refer to "**Refilling AdBlue**" below.

Driving is possible without any restrictions.

If AdBlue is not refilled within a certain distance, further level warnings are displayed in the Driver Information Centre depending on the current AdBlue level.

Engine restarts prevented

Subsequent requests to refill AdBlue and finally the announcement that an engine restart will be prevented are displayed in the Driver Information Centre.

Note
These restrictions are a legal requirement.

Before the prevention of an engine restart, a warning message with 0 km is displayed in the DIC, indicating that after switching off the ignition an engine restart will be prohibited.

After the prevention of an engine start, a warning message is displayed in the Driver Information Centre reminding the driver that AdBlue level is insufficient.

To allow the engine to be restarted, the tank should be filled with at least 10 litres of AdBlue.

High emission warnings

If the exhaust emission rises above a certain value, warnings similar to the range warnings as described above will be displayed in the Driver Information Centre. Control indicator illuminates continuously together with ⇨ 88 and a warning chime.

Requests to have the exhaust system checked and finally the announcement that an engine restart with be prevented are displayed in the Driver Information Centre.

Note
These restrictions are a legal requirement.

At an AdBlue range of 1100 km, a warning message is displayed in the Driver Information Centre showing

the remaining distance the vehicle can travel before engine restarts are prevented. This warning message is repeated every 100 km.

Seek the assistance of a workshop as soon as possible.

Version without level warnings in the Driver Information Centre

When the Adblue gauge shows the level is very low, control indicator first illuminates continuously, then as Adblue level drops to a certain amount flashes for a few seconds then illuminates continuously.

Refill the Adblue tank as soon as possible. Refer to "**Refilling AdBlue**" below.

Driving is possible without any restrictions.

Engine power loss

As the Adblue level drops further, control indicator flashes for a few seconds then illuminates continuously, accompanied by a warning chime and loss of engine power.

Note
These restrictions are a legal requirement.

If AdBlue is not refilled before the tank is empty, flashes and after the next engine restart the vehicle speed will be limited to approx. 20 km/h.

Refill immediately with at least 10 litres of AdBlue.

High emission warnings

If the exhaust emission rises above a certain value, control indicator illuminates together with ⇨ 88. Consult a workshop as soon as possible.

If the fault is not rectified within a certain distance, and flash for a few seconds then illuminate continuously. Loss of engine power.

When the fault is critical, and flash continuously and after the next engine restart the vehicle speed will be limited to approx. 20 km/h.

Note
These restrictions are a legal requirement.

Seek the assistance of a workshop as soon as possible.

Refilling AdBlue

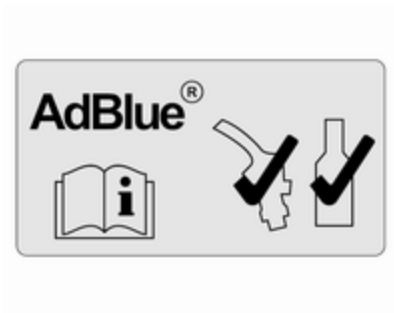

Caution

Only use AdBlue that complies with European standards DIN 70 070 and ISO 22241-1.

Do not use additives.

Do not dilute AdBlue.

Otherwise the selective catalytic reduction system could be damaged.

Note
If AdBlue must be refilled at very low temperatures, the refilling of AdBlue may not be detected by the system. In this case, park the vehicle in a space with a higher ambient temperature until AdBlue is liquefied.

Note
If engine starting is prohibited due to low Adblue level, we recommend adding a volume of at least 10 litres of AdBlue when refilling. Avoid minor top-ups (e.g. less than 5 litres), otherwise the system may not detect a refill.

Note
When unscrewing the protective cap from the filler neck, ammonia fumes may emerge. Do not inhale as the fumes have a pungent smell. The fumes are not harmful by inhalation.

The vehicle must be parked on a level surface.

The filler neck for AdBlue is located behind the filler flap located on the right-hand side of the vehicle.

The filler flap can only be opened if the vehicle is unlocked and the right-hand door is opened.

⚠ Danger

Vehicles with stop-start system: The engine must be switched off and the ignition key removed, to avoid risk of engine being restarted automatically by the system.

Capacities ⇨ 226.

Filling station

⚠ Danger

Follow the operating and safety instructions of the filling station when refilling Adblue.

1. Switch off engine and remove key from ignition switch.
2. Pull filler flap to open.

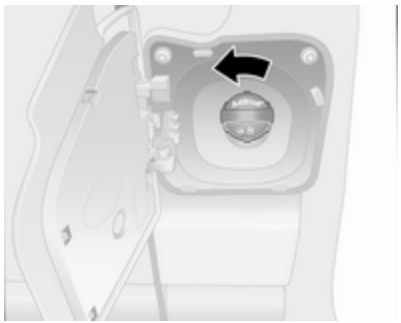

3. Unscrew protective cap anticlockwise from the filler neck.
4. Fully insert the pump nozzle into the filler neck and switch it on.

5. When refilling is complete, mount the protective cap and turn clockwise until it engages.
6. Close filler flap and right-hand door.

AdBlue canister

Note
Only use the designated AdBlue canisters for refilling, to prevent a topping-up of too much AdBlue. Additionally, the fumes in the tank are captured in the canister and do not emerge.

Note
Since AdBlue has a limited durability, check the date of expiry before refilling.

1. Switch off engine and remove key from ignition switch.
2. Pull filler flap to open.

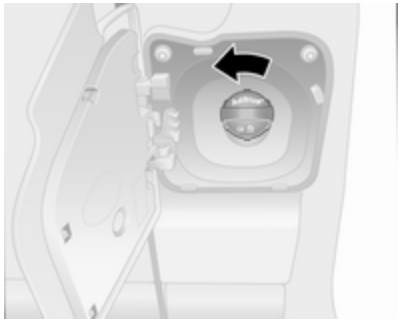

3. Unscrew protective cap anticlockwise from the filler neck.
4. Open AdBlue canister.
5. Mount one end of the hose on the canister and screw the other end on the filler neck.
6. Lift the canister until it is empty.
7. Unscrew the hose from the filler neck.
8. Mount the protective cap and turn clockwise until it engages.
9. Close filler flap and right-hand door.

Note
Dispose of AdBlue canister and hose according to environmental requirements.

Note
Let the vehicle idle for 10 seconds to allow the system to detect the AdBlue refill.

Failure to observe this procedure will result in the system only recognising the AdBlue refill after 20 minutes of driving.

If the AdBlue refill is detected successfully, AdBlue level warnings will disappear.

If the AdBlue refill is not detected some time after running the engine, seek the assistance of a workshop.

Filler cap

Only use genuine filler caps. Adblue tank has a special filler cap.

Fault

If the system detects an operating fault, control indicator illuminates together with and a warning chime. Seek the assistance of a workshop immediately.

Depending on version, a corresponding message may also appear in the Driver Information Centre ⇨ 93.

Manual transmission

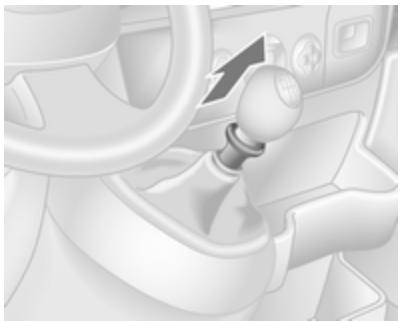

To engage reverse, with the vehicle stationary depress the clutch pedal, pull up the collar on the selector lever and engage the gear.

If the gear does not engage, set the lever to neutral, release the clutch pedal and depress again; then repeat gear selection.

Do not slip the clutch unnecessarily.

When operating, depress the clutch pedal completely. Do not use the pedal as a foot rest.

Caution
It is inadvisable to drive with hand resting on the selector lever.

Manual transmission automated

The manual transmission automated (MTA) permits manual (manual mode) or automatic gear shifting (automatic mode), both with automatic clutch control.

Transmission display

Shows the mode and current gear.

Starting the engine

Depress the brake pedal when starting the engine. If the brake pedal is not depressed, illuminates in the transmission display and the engine cannot be started.

When the brake pedal is depressed, the transmission automatically shifts to **N** (neutral); "N" appears in the transmission display and the engine can be started. There may be a slight delay.

Selector lever

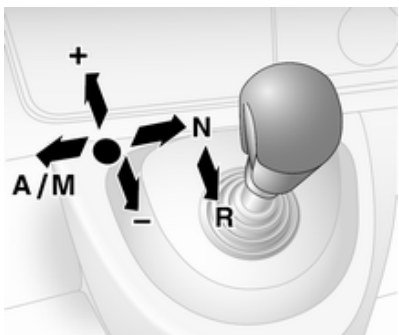

Always move the selector lever in the appropriate direction as far as it will go. Upon release, it automatically returns to the centre position.

N : neutral

A/M : switch between automatic and manual mode

The transmission display shows "A" when in automatic mode.

R : reverse gear

Engage only when vehicle is stationary. The transmission display shows "R" when reverse gear is engaged.

+ : shift to a higher gear.

- : shift to a lower gear.

Starting off

When the engine is started, the transmission is in automatic mode. Depress the brake pedal and move the selector lever towards **+** to engage first gear.

If **R** is selected, reverse gear is engaged. The vehicle starts to move when the brake pedal is released. To

start off quickly, release the brake pedal and accelerate immediately after engaging a gear.

In automatic mode the transmission shifts to other gears automatically, dependent on driving conditions.

To engage manual mode, move the selector lever towards **A/M**. The current gear will appear in the transmission display.

To engage first gear, depress brake pedal and move selector lever towards **+** or **-**. Shift to a higher or lower gear by moving selector lever to **+** or **-**. Gears can be skipped by moving the selector lever repeatedly at short intervals.

Stopping the vehicle

In automatic or manual mode, first gear is engaged and the clutch is released when the vehicle is stopped. In **R**, reverse gear remains engaged.

When stopping on gradients, engage parking brake or depress the brake pedal. To prevent overheating of the clutch, an intermittent audible warning may sound as a signal to depress the brake pedal or apply the parking brake.

Switch off engine if stopping for a lengthy period, e.g. in traffic jams.

When the vehicle is parked and the driver's door is opened, a warning chime will sound if neutral is not selected or the brake pedal has not been depressed.

Engine braking

Automatic mode

When driving downhill, the manual transmission automated does not shift into higher gears until a fairly high engine speed has been reached. It shifts down in good time when braking.

Manual mode

To utilise the engine braking effect, select a lower gear in good time when driving downhill.

Rocking the vehicle

Rocking the vehicle is only permissible if the vehicle is stuck in sand, mud, snow or a hole. Move the selector lever between **R** and **A/M** (or between **+** and **-**) in a repeat pattern, while applying light pressure to the accelerator pedal. Do not race the engine and avoid sudden acceleration.

Parking

Apply the parking brake. The most recently engaged gear (see transmission display) remains engaged. With **N**, no gear is engaged.

When the ignition is switched off, the transmission no longer responds to movement of the selector lever.

If the ignition is not switched off, or the parking brake has not been applied, a warning chime will sound upon opening the driver's door.

Manual mode

If a higher gear is selected when the engine speed is too low, or a lower gear when the speed is too high, the

shift is not executed. This prevents the engine from running at too low or too high an engine speed.

If engine speed is too low, the transmission automatically shifts to a lower gear.

If engine speed is too high, the transmission only switches to a higher gear via kickdown.

Electronic driving programmes

Winter mode ❄

Activate the Winter mode if you have problems starting off on a slippery road surface.

Activation

Press ❄. Control indicator ❄ is shown in the transmission display. The transmission switches to automatic mode and the vehicle starts off in a suitable gear.

Deactivation

The Winter mode is switched off by:

- pressing ❄ again
- turning off the ignition
- switching to manual mode

In order to protect the transmission at extremely high clutch temperatures, an intermittent audible warning may sound. In such cases, depress the brake pedal, select "N" and apply the parking brake to allow the clutch to cool down.

Laden mode kg

It is possible to use the Laden mode in both manual and automatic modes. In both cases, the gearshifting patterns are adapted automatically for carrying an increased payload.

Activation

Press **kg**. Control indicator **kg** is shown in the transmission display. The transmission will then select optimized gearshift patterns.

Deactivation

The Laden mode is switched off by:

- pressing **kg** again
- turning off the ignition

Kickdown

If the accelerator pedal is pressed past the pressure point, the transmission shifts to a lower gear depending on engine speed. Full engine power is available for acceleration.

If engine speed is too high the transmission switches to a higher gear, even in manual mode. Without kickdown this automatic shift is not effected in manual mode.

Fault

In the event of a fault, control indicator is shown in the transmission display. Continued driving is possible provided the vehicle is driven with care and anticipation.

Have the cause of the fault remedied by a workshop.

Interruption of power supply

The clutch is not disengaged if there is an interruption of the power supply when a gear is engaged. The vehicle cannot move.

If the vehicle battery is discharged, start the vehicle using jump leads ⇨ 194.

If the cause of the fault is not a discharged vehicle battery, seek the assistance of a workshop.

If neutral cannot be selected, the vehicle must only be towed with the drive wheels raised off the ground ⇨ 196.

Towing the vehicle ⇨ 196.

Brakes

The brake system comprises two independent brake circuits.

If a brake circuit fails, the vehicle can still be braked using the other brake circuit. However, braking effect is achieved only when you depress the brake pedal firmly. You need to use considerably more force for this. The braking distance is extended. Seek the assistance of a workshop before continuing your journey.

When the engine is not running, the support of the brake servo unit disappears once the brake pedal has been depressed once or twice. Braking effect is not reduced, but braking requires significantly greater force. It is especially important to bear this in mind when being towed.

Control indicator ⇨ 89.

Antilock brake system

Antilock brake system (ABS) prevents the wheels from locking.

ABS starts to regulate brake pressure as soon as a wheel shows a tendency to lock. The vehicle remains steerable, even during hard braking.

ABS control is made apparent through a pulse in the brake pedal and the noise of the regulation process.

For optimum braking, keep the brake pedal fully depressed throughout the braking process, despite the fact that the pedal is pulsating. Do not reduce the pressure on the pedal.

Control indicator (ABS) ⇨ 89.

Fault

If control indicators (ABS) and ⚠ illuminate with the messages **CHECK ABS** and **CHECK ESP** in the Driver Information Centre (DIC), there is a fault in the ABS. The brake system remains operational but without ABS regulation.

⚠ Warning

If there is a fault in the ABS, the wheels may be liable to lock due to braking that is heavier than normal. The advantages of ABS are no longer available. During hard braking, the vehicle can no longer be steered and may swerve.

If control indicators (ABS), ⚠, (!) and STOP illuminate, the ABS and ESP are deactivated and the message **BRAKING FAULT** is shown in the DIC. Seek the assistance of a workshop.

Have the cause of the fault remedied by a workshop.

Parking brake

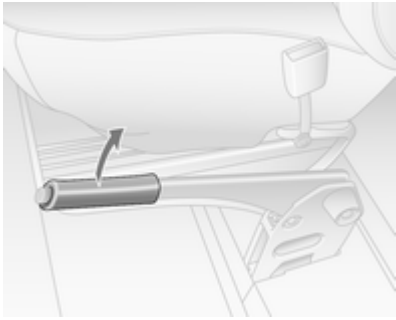

⚠ Warning

Always apply parking brake firmly without operating the release button, and apply as firmly as possible on a downhill or uphill slope.

To release the parking brake, pull the lever up slightly, press the release button and fully lower the lever.

To reduce the operating forces of the parking brake, depress the brake pedal at the same time.

Control indicator ⓘ ⇨ 89.

Parking ⇨ 125.

Retractable parking brake

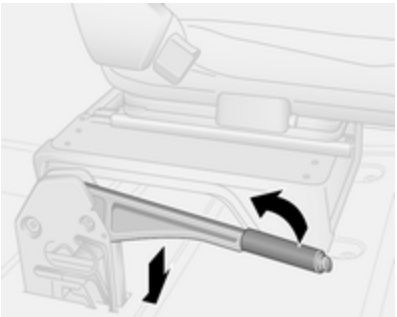

Depending on vehicle, the parking brake lever retracts to the horizontal position even with the parking brake applied.

To release the parking brake, pull the lever up slightly, press the release button and return the lever to the horizontal position.

To apply the parking brake, pull the lever up and release it. The lever rests in a horizontal position.

Brake assist

If the brake pedal is depressed quickly and forcefully, maximum brake force is automatically applied (full braking).

Maintain steady pressure on the brake pedal for as long as full braking is required. Maximum brake force is automatically reduced when the brake pedal is released.

Brake assist is not available during an Autostop. Stop-start system ⇨ 123.

Hill start assist

The system helps prevent unintended movement when driving away on inclines.

When releasing the brake pedal after stopping on an incline (with the selector lever in a forward gear or reverse gear), the brakes remain on for a further 2 seconds. The brakes release automatically as soon as the vehicle begins to accelerate.

Caution

The Hill start assist cannot completely prevent vehicle movement in all situations (extremely steep gradients, etc.).

If necessary, depress the brake pedal to prevent the vehicle from rolling forwards or backwards.

The Hill start assist is not active during an Autostop. Stop-start system ⇨ 123.

Ride control systems

Traction Control system

The Traction Control system (TC) is a component part of the Electronic Stability Program (ESP®Plus) which improves driving stability when necessary, regardless of the type of road surface or tyre grip, by preventing the drive wheels from spinning.

As soon as the drive wheels starts to spin, engine output is reduced and the wheel spinning the most is braked individually. This considerably improves the driving stability of the vehicle on slippery road surfaces.

TC is operational as soon as the ignition is switched on and control indicator extinguishes in the instrument cluster. A corresponding message also appears in the Driver Information Centre (DIC) ⇨ 93.

When TC is active flashes.

⚠Warning

Do not let this special safety feature tempt you into taking risks when driving.

Adapt speed to the road conditions.

Control indicator ⇨ 90.

Trailer stability assist (TSA) ⇨ 156.

Enhanced Traction function

If necessary, in the event of soft ground, mud or snow-covered road surfaces, the Traction control system (TC) can be deactivated to enhance traction:

Press on the instrument panel.

Control indicator illuminates in the instrument cluster and a corresponding message appears in the DIC ⇨ 93.

When vehicle speed reaches 50 km/h, the system switches automatically from Enhanced Traction function to TC operation. Control indicator extinguishes in the instrument cluster.

TC is reactivated by pressing again. Control indicator extinguishes.

TC is also reactivated the next time the ignition is switched on.

Fault

If the system detects a fault, control indicator ⇨ 90 illuminates together with ⇨ 88 in the instrument cluster and a corresponding message appears in the DIC ⇨ 93.

The Traction control system (TC) is not operational. Have the cause of the fault remedied by a workshop.

Vehicle messages ⇨ 93.

Electronic stability program

The Electronic Stability Program (ESP®Plus) improves driving stability when necessary, regardless of the type of road surface or tyre grip. It also prevents the drive wheels from spinning.

As soon as the vehicle starts to swerve (understeer/oversteer), engine output is reduced and the wheels are braked individually. This considerably improves the driving stability of the vehicle on slippery road surfaces.

ESP®Plus is operational as soon as the ignition is switched on and control indicator extinguishes in the instrument cluster. A corresponding message also appears in the Driver Information Centre (DIC) ⇨ 93.

When ESP®Plus comes into action flashes.

⚠ Warning

Do not let this special safety feature tempt you into taking risks when driving.

Adapt speed to the road conditions.

Control indicator ⇨ 90.

Trailer stability assist (TSA) ⇨ 156.

Enhanced Traction function

If necessary, in the event of soft ground, mud or snow-covered road surfaces, ESP®Plus can be deactivated to enhance traction:

Press on the instrument panel.

Control indicator illuminates in the instrument cluster and a corresponding message appears in the DIC ⇨ 93.

When vehicle speed reaches 50 km/h, the system switches automatically from Enhanced Traction function to ESP®Plus operation. Control indicator extinguishes in the instrument cluster.

ESP®Plus is reactivated by pressing again. Control indicator extinguishes.

ESP®Plus is also reactivated the next time the ignition is switched on.

Fault

If the system detects a fault, control indicator ⇨ 90 illuminates together with ⇨ 88 in the instrument cluster and a corresponding message appears in the DIC ⇨ 93.

The Electronic Stability Program (ESP®Plus) is not operational. Have the cause of the fault remedied by a workshop.

Vehicle messages ⇨ 93.

Driver assistance systems

⚠ Warning

Driver assistance systems are developed to support the driver and not to replace the driver's attention.

The driver accepts full responsibility when driving the vehicle.

When using driver assistance systems, always take care regarding the current traffic situation.

Cruise control

The cruise control can store and maintain speeds of 30 km/h and above. Deviations from the stored speeds may occur when driving uphill or downhill. The stored speed will flash in the Driver Information Centre (DIC) ⇨ 93.

For safety reasons the cruise control cannot be activated until the brake pedal has been operated once.

Do not use the cruise control if it is not advisable to maintain a constant speed.

With manual transmission automated, only activate cruise control in automatic mode.

Control indicators and ⇨ 92.

Activation

Press , control indicator illuminates green in the instrument cluster.

Cruise control is now in standby mode and a corresponding message appears in the DIC.

Accelerate to the desired speed and press + or −. The current speed is now stored and maintained and the accelerator pedal can be released.

Control indicator illuminates green in the instrument cluster together with and a corresponding message appears in the DIC.

Vehicle speed can be increased by depressing the accelerator pedal. The stored speed flashes in the instrument cluster. When the accelerator pedal is released, the previously stored speed is resumed.

Cruise control remains activated while gearshifting.

The speed is saved until the ignition is switched off.

Increase speed

With cruise control active, the vehicle speed can be increased continuously or in small increments by holding down or tapping **+** repeatedly.

When the switch is released the current speed is stored and maintained.

Alternatively, accelerate to the desired speed and store by pressing **+**.

Reduce speed

With cruise control active, the vehicle speed can be decreased continuously or in small increments by holding down or tapping **−** repeatedly.

When the switch is released the current speed is stored and maintained.

Deactivation

Press **O**: cruise control is deactivated and the green control indicator extinguishes in the instrument cluster.

Automatic deactivation:

- vehicle speed drops below 30 km/h
- the brake pedal is depressed
- the clutch pedal is depressed
- selector lever in **N**

The speed is stored and a corresponding message appears in the DIC.

Reactivation

Press **R** at a speed above 30 km/h.

If the stored speed is much higher than the current speed, the vehicle will accelerate powerfully until the stored speed is obtained.

Pressing **+** will also reactivate the cruise control function, but at the current vehicle speed only, not the stored speed.

Deleting the stored speed

Press : Green control indicators and extinguish in the instrument cluster.

Cruise control speed limiter

The speed limiter prevents the vehicle exceeding a preset maximum speed above 30 km/h.

Activation

Press , control indicator illuminates yellow in the instrument cluster.

Cruise control speed limiter function is now in standby mode and a corresponding message appears in the DIC.

Accelerate to the desired speed and press **+** or **−**. The current speed is recorded.

The vehicle can be driven normally but it will not be possible to exceed the programmed speed limit except in an emergency.

Where the limit speed cannot be maintained, e.g. when driving on a steep decline, the limit speed will flash in the DIC.

Increase limit speed

The limit speed can be increased continuously or in small increments by holding down or tapping **+** repeatedly.

Reduce limit speed

The limit speed can be decreased continuously or in small increments by holding down or tapping **−** repeatedly.

Exceeding the limit speed

In the event of an emergency it is possible to exceed the limit speed by depressing the accelerator pedal firmly beyond the point of resistance.

The limit speed will flash in the DIC during this period.

Release the accelerator pedal and the speed limiter function is reactivated once a speed lower than the limit speed is obtained.

Note
In vehicles fitted with a Speed limiter, fully depressing the accelerator pedal will not allow you to exceed the set maximum vehicle speed. Speed limiter ⇨ 146.

Deactivation

Press **O**: speed limiter is deactivated and the vehicle can be driven normally.

The limit speed is stored and a corresponding message appears in the DIC.

Reactivation

Press **R**. The speed limiter function is reactivated.

Pressing **+** will also reactivate the speed limiter function, but at the current vehicle speed only, not the stored speed.

Deleting the limit speed

Press .

Yellow control indicator extinguishes in the instrument cluster.

Speed limiter

Maximum speed limiter

In accordance with local or national regulations, the vehicle may be equipped with a fixed maximum speed limiter that cannot be disabled.

If equipped, a warning label indicating the fixed maximum speed limit (90 to 130 km/h) is located on the instrument panel.

Deviations from the maximum speed limit may occur briefly when driving downhill, for physical reasons.

A warning buzzer may sound for 10 seconds if the vehicle briefly exceeds the set limit.

Vehicles also equipped with cruise control speed limiter: the maximum speed cannot be exceeded by depressing the accelerator pedal firmly beyond the point of resistance.

Cruise control speed limiter ⇨ 143.

Parking assist

The parking assist makes reverse parking easier by measuring the distance between the rear of the vehicle and obstacles. It is the driver, however, who bears full responsibility for the parking manoeuvre.

The system consists of four ultrasonic parking sensors in the rear bumper.

Note
Attached parts in the detection area cause system malfunction.

Activation

When reverse gear is engaged, the system switches itself on automatically. Readiness for operation is indicated by a brief acoustic alarm.

An obstacle is indicated by buzzers. The interval between the buzzers becomes shorter as the vehicle gets closer to the obstacle. When the distance is less than 30 cm, the buzzer is continuous.

⚠ Warning

Under certain circumstances, various reflective surfaces on objects or clothing as well as external noise sources may cause the system to fail to detect obstacles.

Special attention must be paid to low obstacles which can damage the lower part of the bumper.

Caution

Performance of the sensor can be reduced when sensors are covered, e.g. by ice or snow.

Performance of the parking assist system can be reduced due to heavy loading.

Special conditions apply if there are taller vehicles involved (e.g. off-road vehicles, mini vans, vans). Object identification in the upper part of these vehicles cannot be guaranteed.

Objects with a very small reflection cross section, like objects of narrow size or soft materials, may not be detected by the system.

Parking assist will not detect objects out of the detection range.

Deactivation

It is possible to deactivate or temporarily deactivate the system.

Temporary deactivation

Temporarily deactivate the system by pressing P on the instrument panel with the ignition on. Control indicator in the button illuminates.

When reverse gear is selected no acoustic signal will sound, indicating deactivation.

The function is reactivated by pressing P again or the next time the ignition is switched on.

Permanent deactivation

Permanently deactivate the system by pressing and holding P on the instrument panel for approx. 3 seconds with the ignition on. Control indicator in the button illuminates continuously.

The system is deactivated and will not operate. When reverse gear is selected no acoustic signal will sound, indicating deactivation.

The function is reactivated by pressing and holding P for approx. 3 seconds.

Fault

If the system detects an operating fault, a continuous acoustic alarm will sound for approx. 3 seconds when selecting reverse gear. Consult a workshop to have the cause of the fault remedied.

Caution

When reversing, the area should be free from obstacles which could impact on the underside of the vehicle.

Impact to the rear axle, which may not be visible, could lead to uncharacteristic changes in the vehicle handling. In the event of such an impact, consult a workshop.

Rear view camera

The rear view camera assists the driver when reversing by displaying a view of the area behind the vehicle in either the interior mirror, the driver's sun visor or the Infotainment system display screen.

⚠ Warning

The rear view camera does not replace driver vision. Note that objects that are outside the

camera's field of view, e.g. below the bumper or underneath the vehicle, are not displayed.

Do not reverse the vehicle by only looking at the display and check the surrounding area behind and around the vehicle before reversing.

The camera is typically installed on the rear doors/tailgate, beneath the number plate moulding.

The area displayed by the camera is limited. The distance of the image that appears on the display differs from the actual distance.

Note
To achieve the optimum visibility, the rear view camera must not be obscured by dirt, snow or ice.

Activation

Interior mirror display screen

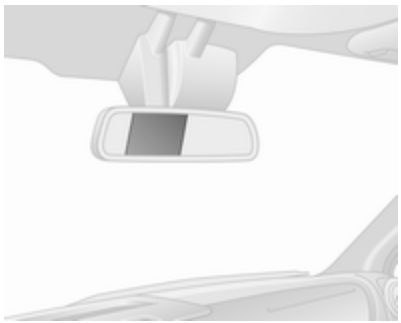

Rear view camera display is automatically activated when reverse gear is engaged. An audible signal confirms activation.

Sun visor display screen

The system can be activated or deactivated by selecting the Start/Stop button located on the right-hand side of the display screen.

The remaining buttons beside the screen enable the user to select source AV1 or AV2 and adjust the brightness and contrast of the display screen.

Infotainment system display screen

In vehicles with Navigation system, the rear view camera display is shown on the Infotainment system display screen.

Trajectory lane display image (1)

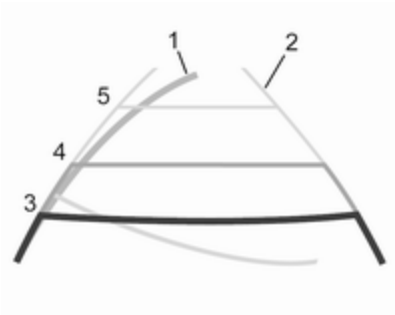

Depending on version, the trajectory lane (1) of the vehicle is shown in blue on the Info-Display. It shows the path of the vehicle in accordance with the steering angle.

Fixed lane display image (2)
The fixed lane display (2) shows the path of the vehicle if the wheels are kept straight.

Guide lines (3, 4, 5) are used together with the fixed lane display (2) and indicate the distance behind the vehicle.

The guide line intervals are as follows:

3 (red) : 30 cm
4 (yellow) : 70 cm
5 (green) : 150 cm

Settings
Settings, e.g. brightness, can be set via the Infotainment system. Refer to Infotainment system manual for further information.

Deactivation

The camera is deactivated after a delay if reverse gear is not engaged.

Fault

The rear view camera may not operate properly when:

- the surrounding is dark
- the sun or the beam of headlights is shining directly into the camera lens
- ice, snow, mud, or anything else covers the camera lens. Clean the lens, rinse it with water, and wipe it with a soft cloth

- the rear doors/tailgate are not closed correctly
- the vehicle had a rear-end accident
- there are extreme temperature changes

Lane departure warning

The lane departure warning system uses a front camera to observe the lane markings between which the vehicle is driving. The system detects lane changes and warns the driver in the event of an unintended lane change via visual and acoustic signals.

Criteria for the detection of an unintended lane change are:

- no operation of turn and lane-change signals
- no active steering

If the driver is performing these actions, no warning will be issued.

Activation

The lane departure warning system is activated by pressing ⚠ in the roof console; LED in the button extinguishes to indicate that the system is switched on.

When control indicator ⚠ ⇨ 89 illuminates in the instrument cluster, the system is ready to operate. A corresponding message also appears in the Driver Information Centre (DIC) ⇨ 93.

Control indicator ⚠ extinguishes when the system is not ready to warn the driver.

The system is only operable at vehicle speeds above 60 km/h and if lane markings are available and detected.

If the turn and lane-change signals are not operated when changing lanes, i.e. an unintended lane change

is detected, control indicator flashes together with a warning chime to alert the driver.

Deactivation

The system is deactivated by pressing ; LED in the button illuminates. A corresponding message also appears in the DIC.

At speeds below 60 km/h the system is inoperable.

Operation hints

The lane departure warning system may not operate properly when:

- The windscreen is not clean.
- There are adverse environmental conditions like heavy rain, snow, direct sunlight or shadows.

The system cannot operate when no lane marking is detected.

Fault

In the event of a fault in the system, a warning message appears in the DIC and the LED in the button illuminates.

Seek the assistance of a workshop.

Driver Information Centre (DIC) ⇨ 93.

Fuel

Fuel for diesel engines

Only use diesel fuel that complies with EN 590. The fuel must have low sulphur content (max. 10 ppm). Equivalent standardised fuels with a biodiesel (= FAME according to EN14214) content of max. 7% by volume (like DIN 51628 or equivalent standards) may be used.

In countries outside the European Union use Euro-Diesel fuel with a sulphur concentration below 50 ppm.

Caution
Use of fuel that does not comply to EN 590 or similar can lead to engine powerloss, increased wear or engine damage and may affect your warranty.

Do not use marine diesel oils, heating oils or entirely plant-based diesel fuels, such as rape seed oil or bio diesel, Aquazole and similar diesel-

water emulsions. Diesel fuels must not be diluted with fuels for petrol engines.

The flow and filterability of diesel fuels are temperature-dependent. When temperatures are low, refuel with diesel fuel with guaranteed winter properties.

Diesel fuel filter ⇨ 166, diesel fuel system bleeding ⇨ 167.

Refuelling

⚠ Danger

Before refuelling, switch off engine and any external heaters with combustion chambers. Switch off any mobile phones.

Follow the operating and safety instructions of the filling station when refuelling.

⚠ Danger

Fuel is flammable and explosive. No smoking. No naked flames or sparks.

If you can smell fuel in your vehicle, have the cause of this remedied immediately by a workshop.

Caution

In case of misfuelling, do not switch on ignition.

The fuel tank filler neck with bayonet cap is located on the left front side of the vehicle.

The fuel filler flap can only be opened if the vehicle is unlocked and the door is opened. Open the fuel filler flap by hand.

⚠ Danger

Vehicles with stop-start system: The engine must be switched off and the ignition key removed, to avoid risk of engine being restarted automatically by the system.

Capacities ⇨ 226.

Remove the fuel filler cap by turning it anti-clockwise.

The fuel filler cap can be hung on the lower hook of the fuel filler flap.

For refuelling, fully insert the pump nozzle and switch it on.

After automatic cut-off, it can be topped up by operating the pump nozzle a maximum of two more times.

Caution
Wipe off any overflowing fuel immediately.

When refuelling is complete, replace the fuel filler cap and turn it clockwise.

Close the fuel filler flap.

Fuel filler cap

Only use genuine fuel filler caps. Diesel-engined vehicles have special fuel filler caps.

Fuel consumption - CO_2-Emissions

For the values specific to your vehicle, refer to the EEC Certificate of Conformity provided with your vehicle or other national registration documents.

General information

The official fuel consumption and specific CO_2 emission figures quoted relate to the EU base model with standard equipment.

Fuel consumption data and CO_2 emission data are determined according to regulation 715/2007 692/2008 A, taking into consideration the vehicle weight in running order, as specified by the regulation.

The figures must not be taken as a guarantee for the actual fuel consumption of a particular vehicle. Additional equipment may result in slightly higher results than the stated consumption and CO_2 figures.

Furthermore, fuel consumption is dependent on personal driving style as well as road and traffic conditions.

Trailer hitch

General information

Only use towing equipment that has been approved for your vehicle. Entrust fitting of towing equipment at a later date to a workshop. It may be necessary to make changes that affect the cooling system, heat shields or other equipment.

Driving characteristics and towing tips

In the case of trailers with brakes, attach the breakaway stopping cable.

Before attaching a trailer, lubricate the coupling ball. However, do not do so if a stabiliser, which acts on the coupling ball, is being used to reduce snaking movements. For trailers with low driving stability the use of a stabiliser is recommended.

A maximum speed of 80 km/h must not be exceeded, even in countries where higher speeds are permitted.

If the trailer starts snaking, drive more slowly, do not attempt to correct the steering and brake sharply if necessary.

When driving downhill, drive in the same gear as if driving uphill and drive at a similar speed.

Adjust tyre pressure to the value specified for full load ⇨ 227.

Trailer towing

Trailer loads

The permissible trailer loads are vehicle-dependent and engine-dependent maximum values which must not be exceeded. The actual trailer load is the difference between the actual gross weight of the trailer and the actual coupling socket load with the trailer coupled.

The permissible trailer loads are specified in the vehicle documents. In general, they are valid for gradients up to max. 12%.

The permitted trailer load applies up to the specified incline and up to an altitude of 1000 metres above sea level. Since engine power decreases as altitude increases due to the air becoming thinner, therefore reducing climbing ability, the permissible gross train weight also decreases by 10% for every 1000 metres of additional altitude. The gross train weight does not have to be reduced when driving on roads with slight inclines (less than 8%, e.g. motorways).

The permissible gross train weight must not be exceeded. This weight is specified on the identification plate ⇨ 206.

Vertical coupling load

The vertical coupling load is the load exerted by the trailer on the coupling ball. It can be varied by changing the weight distribution when loading the trailer.

The maximum permissible vertical coupling load is specified on the towing equipment identification plate and in the vehicle documents. Always aim for the maximum load, especially in the case of heavy trailers. The vertical coupling load should never fall below 25 kg.

In the case of trailer loads of 1200 kg or more, the vertical coupling load should not be less than 50 kg.

Rear axle load

When the trailer is coupled and the towing vehicle fully loaded (including all occupants), the permissible rear axle load (see identification plate or vehicle documents) must not be exceeded.

Towing equipment

Caution
When operating without a trailer, remove the coupling ball bar.

Towing equipment audible warning

For vehicles fitted with towing equipment, when connected to a trailer the pitch of the audible warning changes upon operation of the turn signals.

The pitch of the audible warning will change if a turn signal light on the trailer or the towing vehicle fails.

Trailer stability assist

If the system detects snaking movements, engine power is reduced and the vehicle/trailer combination is selectively braked until the snaking ceases. While the system is working, keep steering wheel as still as possible.

Trailer stability assist (TSA) is a function of the Electronic Stability Program (ESP) ⇨ 142.

Auxiliary features

Power take-off

Activation

To activate the power take-off, with the vehicle stationary and the engine idling:

- Set the gearshift lever to neutral (vehicles with manual transmission automated: selector lever in position **N**).
- Depress the clutch pedal.
- Press switch on the instrument panel; LED in switch illuminates after approx. 2 seconds.
- Release the clutch pedal.

The engine idle speed increases to 1,200 rpm.

Caution
During operation of the power take-off, never move the selector lever out of neutral (vehicles with manual transmission automated: selector lever in position **N**), to avoid damage to the transmission. If a gear change becomes necessary, i.e. to adjust the driving speed, the power take-off must always be deactivated first.

Deactivation

To deactivate the power take-off:

- Depress the clutch pedal.
- Press switch on the instrument panel; LED in switch extinguishes after approx. 2 seconds.
- Release the clutch pedal.

Fault

If the LED in the switch does not illuminate when attempting to activate the power take-off and/or the system does not operate:

Gradually release the clutch pedal.

- or -

- Set the gearshift lever to neutral (vehicles with manual transmission automated: selector lever in position **N**).
- Depress the clutch pedal.
- Press switch on the instrument panel; LED in switch illuminates after approx. 2 seconds.
- Release the clutch pedal.

Then repeat the above procedure.

Note
The power take-off function is not available when control indicator ⇨ 88, STOP ⇨ 89 or ⇨ 90 is illuminated.

Vehicle care

General Information **159**
Accessories and vehicle modifications 159
Vehicle storage 159
End-of-life vehicle recovery 160
Vehicle checks **160**
Performing work 160
Bonnet 160
Engine oil 161
Engine coolant 162
Power steering fluid 163
Washer fluid 164
Brakes 164
Brake fluid 164
Vehicle battery 164
Diesel fuel filter 166
Diesel fuel system bleeding 167
Wiper blade replacement 167
Bulb replacement **168**
Headlights 168
Adaptive forward lighting 170
Fog lights 170
Front turn signal lights 171
Tail lights 171
Side turn signal lights 172
Centre high-mounted brake light 173
Number plate light 174
Interior lights 174
Instrument panel illumination ... 175
Electrical system **175**
Fuses 175
Engine compartment fuse box . 177
Instrument panel fuse box 177
Load compartment fuse box 178
Vehicle tools **180**
Tools 180
Wheels and tyres **181**
Tyres 181
Winter tyres 181
Tyre designations 181
Tyre pressure 182
Tyre pressure monitoring system 183
Tread depth 185
Changing tyre and wheel size . 185
Wheel covers 185
Tyre chains 186
Tyre repair kit 186
Wheel changing 189
Spare wheel 191
Jump starting **194**
Towing **196**
Towing the vehicle 196
Towing another vehicle 197
Appearance care **198**
Exterior care 198
Interior care 200

General Information

Accessories and vehicle modifications

We recommend the use of genuine parts and accessories and factory approved parts specific for your vehicle type. We cannot assess or guarantee reliability of other products - even if they have a regulatory or otherwise granted approval.

Do not make any modifications to the electrical system, e.g. changes of electronic control units (chip tuning).

Caution
When transporting the vehicle on a train or on a recovery vehicle, the mud flaps might be damaged.

Vehicle storage

Storage for a long period of time

If the vehicle is to be stored for several months:

- Wash and wax the vehicle.
- Have the wax in the engine compartment and underbody checked.
- Clean and preserve rubber seals.
- Change engine oil.
- Drain washer fluid reservoir.
- Check coolant antifreeze and corrosion protection.
- Adjust tyre pressure to the value specified for full load.
- Park vehicle in a dry, well ventilated place. Engage first or reverse gear. Prevent the vehicle from rolling.
- Do not apply parking brake.
- Open bonnet, close all doors and lock the vehicle.
- Disconnect the clamp from the negative terminal of the vehicle battery. Beware that all systems are not functional, e.g. anti-theft alarm system.

Putting back into operation

When the vehicle is to be put back into operation:

- Connect the clamp to the negative terminal of the vehicle battery. Activate the electronics of the power windows.
- Check tyre pressure.
- Fill up the washer fluid reservoir.
- Check the engine oil level.
- Check the coolant level.
- Fit the number plate, if necessary.

End-of-life vehicle recovery

Information on end-of-life vehicle recovery centres and the recycling of end-of-life vehicles is available on our website, where legally required. Only entrust this work to an authorised recycling centre.

Vehicle checks

Performing work

⚠ Warning

Only perform engine compartment checks when the ignition is off.

The cooling fan may start operating even if the ignition is off.

⚠ Danger

The ignition system generates extremely high voltages. Do not touch.

The caps for topping up the engine oil, the coolant, the washer fluid and the oil dipstick handle are yellow for ease of identification.

Bonnet

Opening

Pull the release lever and return it to its original position.

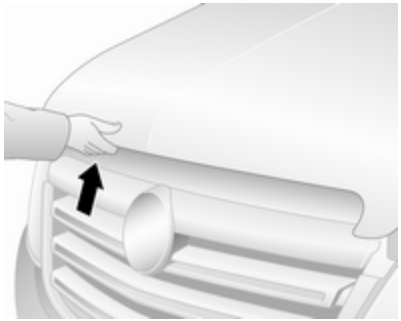

Pull the safety catch, located slightly left of centre, and open the bonnet.

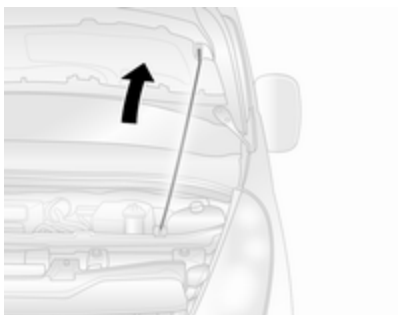

Pull up the support rod from its holder, then secure it in the right side hook on the underside of the bonnet.

If the bonnet is opened during an Autostop, the engine will be restarted automatically for safety reasons.

Closing

Before closing the bonnet, press the support into the holder.

Lower the bonnet and allow it to drop into the catch from a low height (20-25 cm). Check that the bonnet is engaged.

Engine oil

Check the engine oil level manually on a regular basis to prevent damage to the engine.

Ensure that the correct specification of oil is used. Recommended fluids and lubricants ⇨ 203.

The maximum engine oil consumption is 0.6 l per 1000 km.

Check with the vehicle on a level surface. The engine must be at operating temperature and switched off for at least 10 minutes.

Pull out the dipstick, wipe it clean, insert it to the stop on the handle, pull out and read the engine oil level.

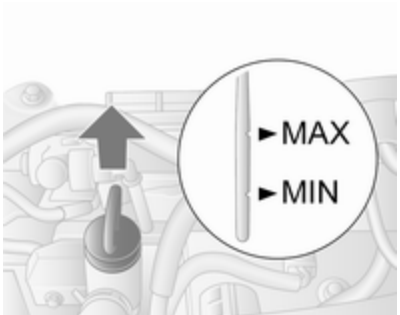

When the engine oil level has dropped to the **MIN** mark, top-up engine oil.

Caution
Do not allow the engine oil level to drop below the minimum level!

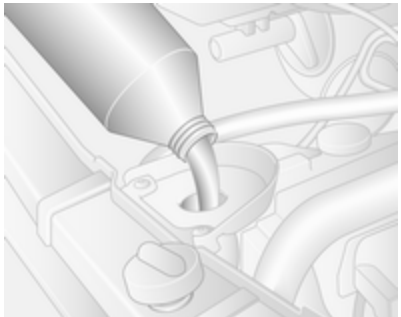

We recommend the use of the same type of engine oil that was used at the last change.

The engine oil level must not exceed the maximum mark **MAX** on the dipstick.

Caution
Overfilled engine oil must be drained or suctioned out.

To prevent spillage when replenishing the engine oil, we recommend using a funnel. Ensure funnel is securely located onto the filler pipe.

A stabilization of the engine oil consumption will not take place until the vehicle has been driven several thousand kilometres. Only then can the actual degree of consumption be established.

If consumption exceeds more than 0.6 litres every 1000 km after this running-in period, consult a workshop.

Capacities ⇨ 226, Engine oil level monitor ⇨ 82.

Fit the cap on straight and tighten it.

Engine coolant

The coolant provides freeze protection down to approx. -28 °C.

Caution
Only use approved antifreeze.

Coolant level

Caution
Too low a coolant level can cause engine damage.

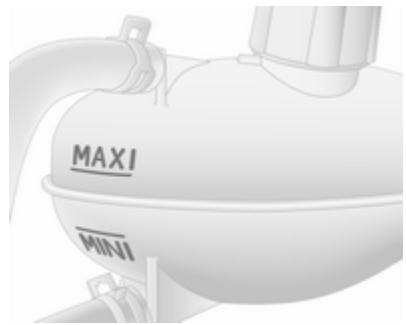

If the cooling system is cold, the coolant level should be just above the **MINI** mark. Top up if the level is low.

⚠Warning
Allow the engine to cool before opening the cap. Carefully open the cap, relieving the pressure slowly.

Top up with antifreeze. If no antifreeze is available, use clean tap water or distilled water. Install the cap tightly. Have the antifreeze concentration checked and have the cause of the coolant loss remedied by a workshop.

If a substantial amount of coolant is required, it will be necessary to bleed any trapped air from the cooling system. Seek the assistance of a workshop.

Power steering fluid

Caution
Extremely small amounts of contamination can cause steering system damage and cause it to not work properly. Do not allow contaminates to contact the fluid side of the reservoir cap or from entering the reservoir.

The fluid level normally does not need to be checked. If an unusual noise is heard during steering or if the power steering reacts conspicuously, seek the assistance of a workshop.

Depending on vehicle, the power steering fluid reservoir may be located in the engine compartment (Type A) or below the front wheel arch, behind a trim panel (Type B).

Type A

If the fluid level in the reservoir falls below the **MINI** mark, consult a workshop.

Type B

If the fluid level in the reservoir falls below the **MIN** mark, consult a workshop.

Washer fluid

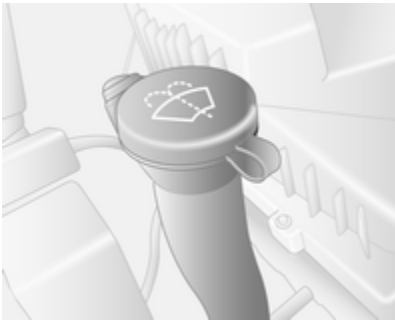

Fill with clean water mixed with a suitable quantity of windscreen washer fluid which contains antifreeze.

Caution

Only washer fluid with a sufficient antifreeze concentration provides protection at low temperatures or a sudden drop in temperature.

Use of washer fluid containing isopropanol can damage exterior lamps.

Brakes

In the event of minimum thickness of the brake lining, a squealing noise sounds during braking.

Continued driving is possible but have the brake linings replaced as soon as possible.

Once new brake linings are installed, do not brake unnecessarily hard for the first few journeys.

Brake fluid

⚠ Warning

Brake fluid is poisonous and corrosive. Avoid contact with eyes, skin, fabrics and painted surfaces.

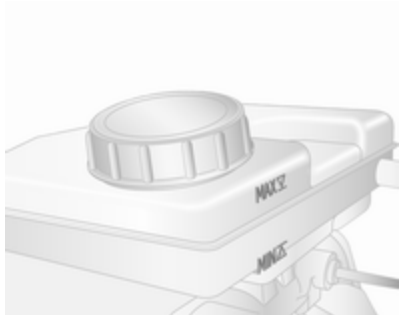

The brake fluid level must be between the **MIN** and **MAX** marks.

When topping up, ensure maximum cleanliness as contamination of the brake fluid can lead to brake system malfunctions. Have the cause of the loss of brake fluid remedied by a workshop.

Only use brake fluid approved for your vehicle.

Brake and clutch fluid ⇨ 203.

Vehicle battery

The vehicle battery is maintenance-free provided that the driving profile allows sufficient charging of the

battery. Short-distance-driving and frequent engine starts can discharge the battery. Avoid the use of unnecessary electrical consumers.

Batteries do not belong in household waste. They must be disposed of at an appropriate recycling collection point.

Laying up the vehicle for more than 4 weeks can lead to battery discharge. Disconnect the clamp from the negative terminal of the vehicle battery.

Ensure the ignition is switched off before connecting or disconnecting the vehicle battery.

Battery access

The battery is located behind a panel in the front left-hand door step. Remove the panel to access the battery.

Replacing the vehicle battery

In vehicles with an AGM (Absorptive Glass Mat) battery, make sure to have the battery replaced with another AGM battery.

An AGM battery can be identified by the label on the battery. We recommend the use of an original Opel battery.

Note
Using an AGM vehicle battery different from the original Opel vehicle battery may result in a lower performance of the stop-start system.

We recommend that you have the vehicle battery replaced by a workshop.

Stop-start system ⇨ 123.

Charging the vehicle battery

⚠Warning

On vehicles with stop-start system, ensure that the charging potential does not exceed 14.6 volts when using a battery charger. Otherwise the vehicle battery might be damaged.

⚠Danger

Ensure adequate ventilation when charging the battery. There is a risk of explosion if gases generated during charging are allowed to accumulate!

Jump starting ⇨ 194.

Warning label

Meaning of symbols:

- No sparks, naked flames or smoking.
- Always shield eyes. Explosive gases can cause blindness or injury.
- Keep the vehicle battery out of reach of children.
- The vehicle battery contains sulfuric acid which could cause blindness or serious burn injuries.
- See the Owner's Manual for further information.
- Explosive gas may be present in the vicinity of the battery.

Additional battery

Depending on the vehicle's auxiliary equipment, certain models may have an additional battery mounted under the front seat.

Diesel fuel filter

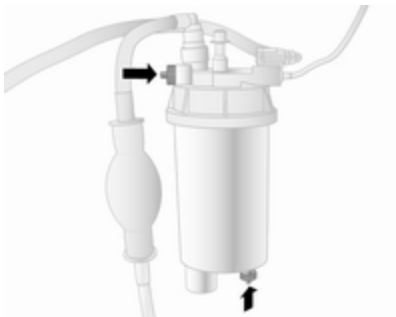

Drain diesel fuel filter of residual water at every engine oil change.

Place a container underneath the filter housing. Loosen the knurled screws on the filter cover and on the lower part of the filter by approx. one turn, to drain off the water.

The filter is drained as soon as diesel fuel emerges from the knurled screw at the bottom. Retighten the two screws.

Check diesel fuel filter at shorter intervals if the vehicle is subjected to extreme operating conditions.

Diesel fuel system bleeding

If the fuel tank has been run dry, it will be necessary to air vent or bleed the diesel fuel system.

Fill the tank with fuel and proceed as follows:

1. Place a suitable container underneath the fuel filter vent screw to collect fuel.
2. Loosen the vent screw (arrowed) by one turn.
3. Manually operate the in-line supply pump slowly and steadily until fuel discharging from the loosened vent screw is free of air bubbles.
4. Retighten the vent screw.

If the engine cannot be started after several attempts to bleed the diesel fuel system, seek the assistance of a workshop.

Wiper blade replacement

Wiper blades on the windscreen

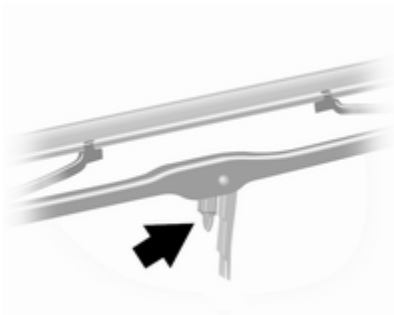

Lift wiper arm, press retaining clip towards wiper arm and detach wiper blade.

Attach the wiper blade slightly angled to the wiper arm and push until it engages.

Lower wiper arm carefully.

Bulb replacement

Switch off the ignition and turn off the relevant switch or close the doors.

Only hold a new bulb at the base. Do not touch the bulb glass with bare hands.

Use only the same bulb type for replacement.

Bulb check

After a bulb replacement, switch on the ignition, operate and check the lights.

Headlights

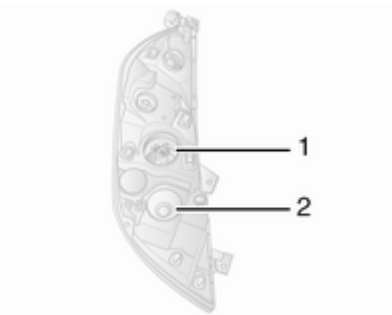

Headlights have separate systems for high beam **1** and low beam **2**.

High beam

1. Remove headlamp protective cover.
2. Detach wiring connector from bulb.

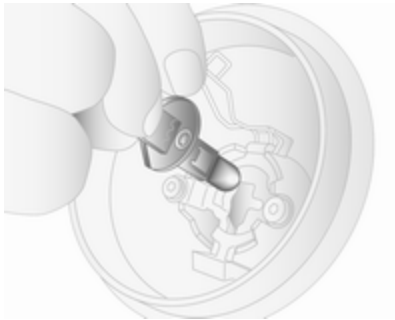

3. Release spring clip.
4. Withdraw bulb from reflector housing.
5. Renew bulb and secure with spring clip.
6. Reattach wiring connector to bulb.
7. Replace headlamp protective cover.

Low beam

1. Remove headlamp protective cover.
2. Detach wiring connector from bulb.
3. Rotate bulb holder anti-clockwise to disengage.
4. Withdraw bulb holder from reflector housing.

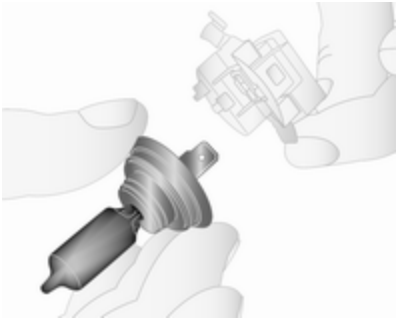

5. Detach bulb from bulb holder and renew the bulb.
6. Insert the bulb holder, engaging the two lugs in the reflector housing and rotate clockwise to secure.
7. Reattach wiring connector to bulb.
8. Replace headlamp protective cover.

Sidelights

1. Remove protective cover.
2. Detach wiring connector from bulb.
3. Rotate bulb holder anti-clockwise to disengage.
4. Withdraw bulb holder from reflector housing.

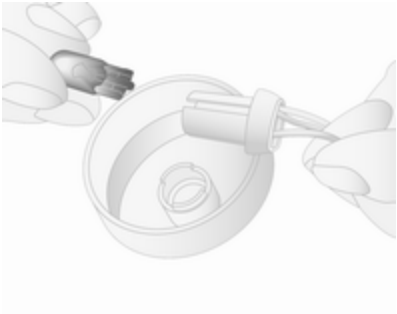

5. Detach bulb from bulb holder and renew the bulb.
6. Insert the bulb holder, engaging the two lugs in the reflector housing and rotate clockwise to secure.
7. Reattach wiring connector to bulb.
8. Replace protective cover.

Adaptive forward lighting

Cornering light

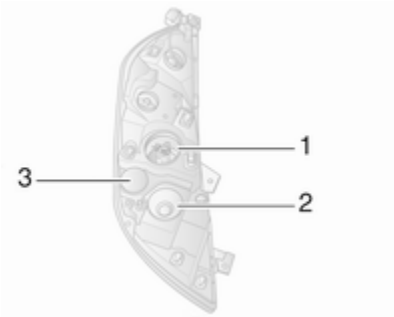

Headlights have separate systems for high beam **1** and low beam **2**. The cornering light **3** is located between the headlights.

1. Remove protective cover.
2. Detach wiring connector from bulb.
3. Rotate bulb holder anti-clockwise to disengage.
4. Withdraw bulb holder from reflector housing.

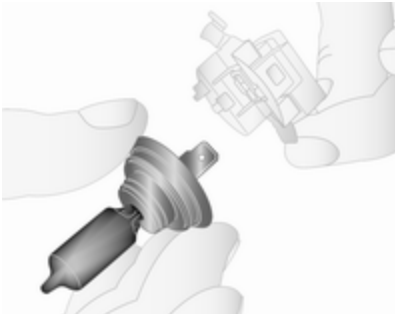

5. Detach bulb from bulb holder and renew the bulb.
6. Insert the bulb holder, engaging the two lugs in the reflector housing and rotate clockwise to secure.
7. Reattach wiring connector to bulb.
8. Replace protective cover.

Fog lights

Have the front fog light bulbs replaced by a workshop.

Front turn signal lights

1. Remove protective cover.
2. Detach wiring connector from bulb.
3. Rotate bulb holder anti-clockwise to disengage.
4. Withdraw bulb holder from reflector housing.

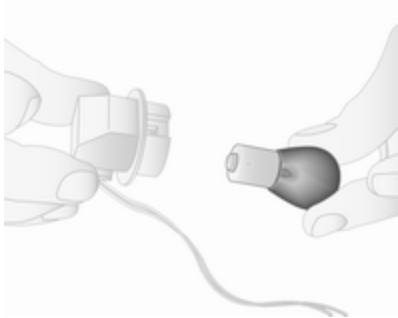

5. Detach bulb from bulb holder and renew the bulb.
6. Insert the bulb holder, engaging the two lugs in the reflector housing and rotate clockwise to secure.
7. Reattach wiring connector to bulb.
8. Replace protective cover.

Tail lights

Rear brake, tail, turn signal, reverse and fog tail lights

1. Remove the upper and lower trim panels from the rear pillar.
2. Unscrew the two nuts from the locating pins on the rear of the lamp assembly.
3. Withdraw the lamp assembly rearwards from the outer side.
4. Detach wiring connector from lamp assembly.

5. Remove the three screws from the rear of the lamp assembly.
6. Remove bulb holder from the lamp assembly.

7. Push bulb into socket slightly, rotate anti-clockwise, remove and renew bulb.

   Turn signal light (**1**)

   Tail and brake light (**2**)

   Reverse light (**3**)

   Rear fog light, may be on one side only (**4**)
8. Replace bulb holder in lamp assembly.
9. Replace the three screws on the rear of the lamp assembly.
10. Reattach wiring connector to lamp assembly.
11. Replace lamp assembly from the outer side into original position, ensuring that it is seated correctly.
12. Replace the two nuts onto the locating pins on the rear of the lamp assembly.
13. Install the upper and lower trim panels to the rear pillar.

Side turn signal lights

1. Push the lamp assembly to the right and pull at the left-hand side of the lamp assembly to release from the aperture.

2. Detach wiring connector from lamp assembly.
3. Remove bulb holder from lamp assembly by rotating 90° and renew bulb.
4. Install bulb holder in lamp assembly.

5. Reattach wiring connector.
6. Install lamp assembly into aperture and push to the left to secure.

Mirror turn signal lights

1. Move the lower mirror assembly from the front to access the screw.
2. Remove the screw using a torx screwdriver.

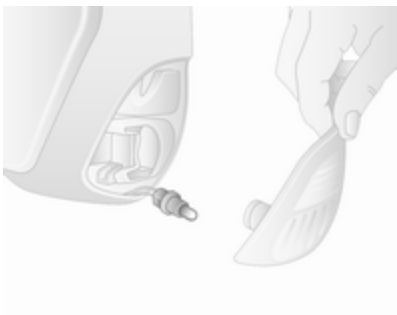

3. Remove bulb holder from the rear of the lower mirror assembly.
4. Renew bulb.
5. Replace bulb holder.
6. Replace the screw.

Centre high-mounted brake light

1. Remove cover from the inside of the rear door.
2. Unscrew the nut from the locating pin at the rear of the lamp assembly.

3. Remove the lamp assembly from the aperture on the outer side.
4. Detach wiring connector from lamp assembly.
5. Remove bulb holder from lamp assembly and renew bulb.
6. Install bulb holder in lamp assembly and reattach wiring connector to lamp assembly.
7. Replace lamp assembly into aperture, ensuring that it is seated correctly.

8. Replace the nut onto the locating pin on the rear of the lamp assembly.
9. Install cover on the inside of the rear door.

Number plate light

1. Unclip lens using a flat blade screwdriver.
2. Remove cover and renew bulb.
3. Reinstall lens.

Interior lights

Front courtesy light

1. Remove lens using a flat blade screwdriver.
2. Renew bulb.
3. Reinstall lens.

Load compartment light

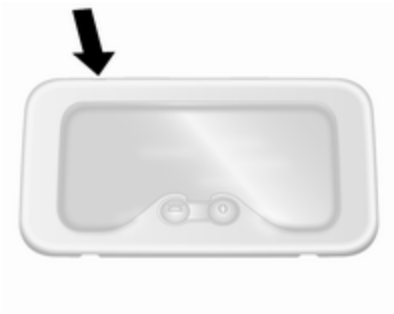

1. Remove lamp assembly using a flat blade screwdriver.
2. Detach wiring connector from lamp assembly.
3. Remove lens cover and renew bulb.
4. Reattach wiring connector and reinstall lamp assembly.

Front door panel light

1. Remove lamp assembly using a flat blade screwdriver.
2. Remove lens on lamp assembly.
3. Renew bulb and install lens.
4. Reinstall lamp assembly.

Rear courtesy lights

Have bulbs replaced by a workshop.

Glovebox light

Have bulbs replaced by a workshop.

Instrument panel illumination

Have bulbs replaced by a workshop.

Electrical system

Fuses

Data on the replacement fuse must match the data on the defective fuse.

There are two fuse boxes in the vehicle:

- on the left-hand side of the instrument panel, behind the trim panel
- in the engine compartment located below the coolant expansion tank

Combi
An additional fuse box is located behind a trim panel on the right-hand side of the load compartment, beside the rear door.

Bus
An additional fuse box is located on the lower right-hand side of the load compartment, below the step trim panel.

Before replacing a fuse, turn off the respective switch and the ignition.

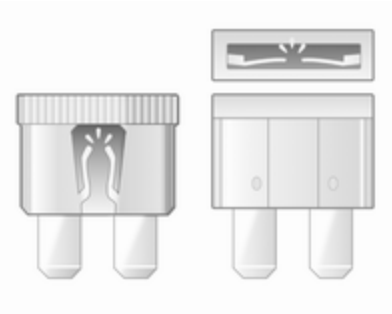

A blown fuse can be recognised by its melted wire. Do not replace the fuse until the cause of the fault has been remedied.

It is advisable to carry a full set of fuses. Consult a workshop.

Some functions are protected by several fuses.

Fuses may also be inserted without existence of a function.

Note
Not all fuse box descriptions in this manual may apply to your vehicle.

When inspecting the fuse box, refer to the fuse box label.

Fuse extractor

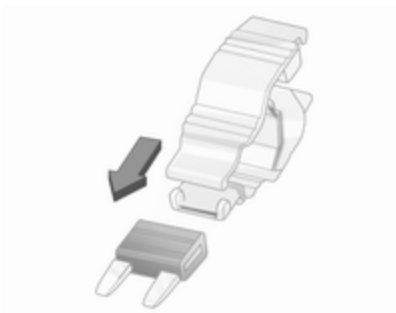

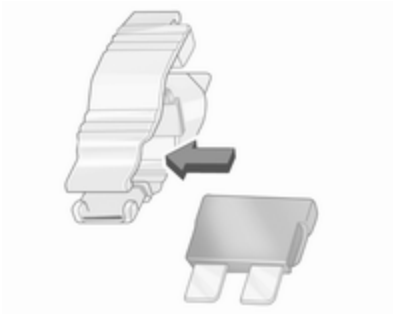

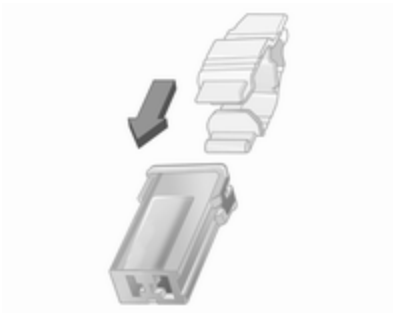

To help in replacing fuses, a fuse extractor is located in the instrument panel fuse box.

Place the fuse extractor on the various types of fuse from the top or side, and withdraw fuse.

Engine compartment fuse box

Located below the coolant expansion tank.

Some circuits may be protected by several fuses.

Due to restricted accessibility, have fuses replaced by a workshop.

Symbol	Circuit
	Right side lights
	Left side lights
	Right low beam
	Left low beam
	Front fog light
	Left high beam
	Right high beam
	ABS
	Windscreen wiper
	Heating and ventilation system / Air conditioning
	Heated windscreen

Instrument panel fuse box

Located behind the trim panel on the left-hand side of the instrument panel. Pull upper part of trim panel to remove.

Do not store any objects behind this panel.

Some circuits may be protected by several fuses.

Symbol	Circuit
	Infotainment system / Seat heating / Vehicle display screen / Audio connections / Alarm
	Power outlet
	Cigarette lighter
	Instrument panel
	Central locking
	Interior lights
	Turn signals / Rear fog lights / Body control module
DIAG	Diagnostic connector
	ABS / Electronic Stability Program
	Interior lights / Brake lights
	Body control module
STOP	Brake light

Symbol	Circuit
ALIM UCH	Body control module / Power windows / Heating and ventilation system / Air conditioning
	Left heated rear window
	Right heated rear window
	Windscreen washer
	Electronic immobiliser
	Heated seats
FBL	Cornering light
	Hands-free connection
T	Tachograph
PTO	Power take-off
	Horn
	Preheating / Diesel fuel filter
	Climate control fan
	Heated exterior mirrors
	Left-hand side light
	Right-hand side light

Symbol	Circuit
CONFORT	Pneumatic suspension
	Navigation system
ADP	Additional adaptations
	Power windows / Body control module

Load compartment fuse box

Combi

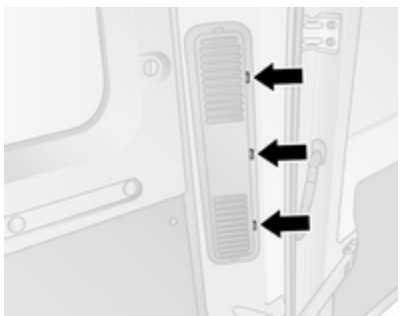

Located behind the trim panel on the right-hand side of the load compartment, beside the rear door.

Using a suitable tool, e.g. a flat-blade screwdriver, unclip the trim panel at the 3 locations shown in the illustration and remove.

Do not store any objects behind this panel.

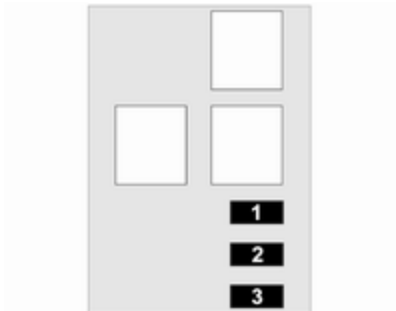

No.	Circuit
1	Speed 3: additional evaporator
2	Speed 2: additional evaporator
3	Speed 1: additional evaporator

Bus

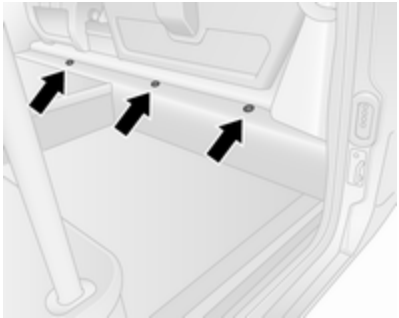

Located below the step trim panel on the lower right-hand side of the load compartment.

Using a suitable tool, e.g. a flat-blade screwdriver, unclip the trim panel at the 3 locations shown in the illustration and remove.

Do not store any objects behind this panel.

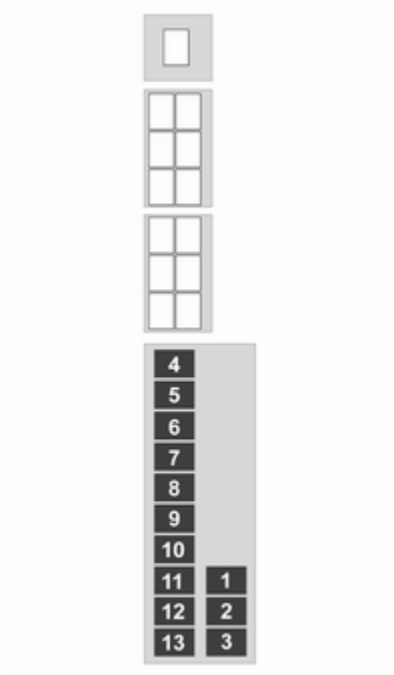

No.	Circuit
1	Speed 2: right-hand evaporator fan
2	Speed 2: left-hand evaporator fan
3	Speed 1: left-hand evaporator fan
4	Left-hand heating
5	Speed 3: left-hand evaporator fan
6	Condenser fan
7	Right-hand heating
8	Speed 3: right-hand evaporator fan
9	Power sliding door
10	Corridor lighting
11	Foot panel
12	Child safety warning buzzer
13	Speed 1: right-hand evaporator fan

Some circuits may be protected by several fuses.

Vehicle tools

Tools

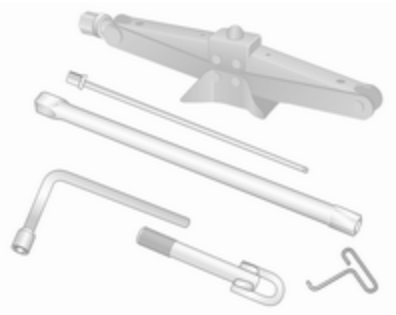

The jack, wheel wrench, adapters (for spare wheel removal), hub cap hook and towing eye are contained in a unit, stowed under the front seat.

Note
Depending on vehicle, there may be multiple adapters for spare wheel removal.

Vehicles with Rear-wheel drive: A hydraulic jack and a set of extension pieces for use with the jack are also included.

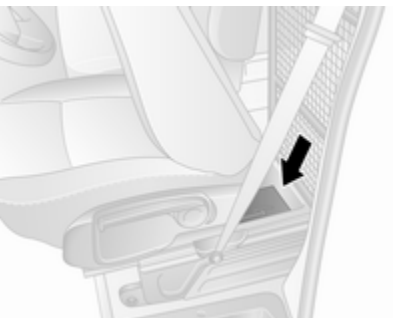

To access this unit, slide the seat fully forwards and fold down the backrest.

Tyre repair kit ⇨ 186.

Wheel changing ⇨ 189.

Spare wheel ⇨ 191.

Wheels and tyres

Tyre condition, wheel condition

Drive over edges slowly and at right angles if possible. Driving over sharp edges can cause tyre and wheel damage. Do not trap tyres on the kerb when parking.

Regularly check the wheels for damage. Seek the assistance of a workshop in the event of damage or unusual wear.

We recommend not swapping the front wheels with the rear wheels and vice versa, as this can affect vehicle stability. Always use less worn tyres on the rear axle.

Tyres

Factory-fitted tyres are matched to the chassis and offer optimum driving comfort and safety.

Winter tyres

Winter tyres improve driving safety at temperatures below 7 °C and should therefore be fitted on all wheels.

In accordance with country-specific regulations, affix the maximum speed sticker in the driver's field of view.

Tyre designations

E.g. **215/65 R 16 C 109 R**

215 : tyre width, mm
65 : cross-section ratio (tyre height to tyre width), %
R : belt type: Radial
RF : type: RunFlat
16 : wheel diameter, inches
C : cargo or commercial use
88 : load index e.g. 109 is equivalent to approx. 1030 kg
R : speed code letter

Speed code letter:

Q : up to 160 km/h
S : up to 180 km/h
T : up to 190 km/h
H : up to 210 km/h
V : up to 240 km/h
W : up to 270 km/h

Choose a tyre appropriate for the maximum speed of your vehicle.

The maximum speed is achievable at kerb weight with driver (75 kg) plus 125 kg payload. Optional equipment could reduce the maximum speed of the vehicle.

Directional tyres

Fit directional tyres such that they roll in the direction of travel. The rolling direction is indicated by a symbol (e.g. an arrow) on the sidewall.

Tyre pressure

Check the pressure of cold tyres at least every 14 days and before any long journey. Do not forget the spare wheel. This also applies to vehicles with tyre pressure monitoring system.

The tyre pressure information label on the driver's door frame indicates the original equipment tyres and the correspondent tyre pressures. Always inflate tyres to the pressures shown on the label.

Tyre pressures ⇨ 227.

The tyre pressure data refers to cold tyres. It applies to summer and winter tyres.

Always inflate the spare tyre to the pressure specified for full load.

Incorrect tyre pressures will impair safety, vehicle handling, comfort and fuel economy and will increase tyre wear.

Tyre pressures differ depending on various options. For the correct tyre pressure value, follow the procedure below:

1. Identify the engine identifier code. Engine data ⇨ 208.
2. Identify the respective tyre.

The tyre pressure tables show all possible tyre combinations ⇨ 227.

For the tyres approved for your vehicle, refer to the EEC Certificate of Conformity provided with your vehicle or other national registration documents.

The driver is responsible for correct adjustment of tyre pressure.

⚠ Warning

If the pressure is too low, this can result in considerable tyre warm-up and internal damage, leading to tread separation and even to tyre blow-out at high speeds.

⚠ Warning

For specific tyres the recommended tyre pressure as shown in the tyre pressure table may exceed the maximum tyre pressure as indicated on the tyre. Never exceed the maximum tyre pressure as indicated on the tyre.

Temperature dependency

Tyre pressure depends on the temperature of the tyre. During driving, tyre temperature and pressure increase.

Tyre pressure values provided on the tyre information label and tyre pressure chart are valid for cold tyres, which means at 20 °C. The pressure increases by nearly 10 kPa (0.1 bar)

for a 10 °C temperature increase. This must be considered when warm tyres are checked.

Rear-wheel drive, with twin rear wheels

When inflating the outer tyre, the inflation tube should be passed between the two wheels.

Tyre pressure monitoring system

The Tyre Pressure Monitoring System (TPMS) uses radio and sensor technology to check tyre pressure levels.

Caution
Tyre pressure monitoring system warns only about low tyre pressure condition and does not replace regular tyre maintenance by the driver.

All wheels must be equipped with pressure sensors and the tyres must have the prescribed pressure.

Note
In countries where the tyre pressure monitoring system is legally required, the use of wheels without pressure sensors will invalidate the vehicle type approval.

The TPMS sensors monitor the air pressure in the tyres and transmit tyre pressure readings to a receiver located in the vehicle.

Tyre pressure chart ⇨ 227.

Low tyre pressure condition

A detected low tyre pressure condition is indicated by illumination of control indicator ⓘ ⇨ 90 and a corresponding message appears in the DIC.

If ⓘ illuminates, stop as soon as possible and inflate the tyres as recommended ⇨ 227.

After inflating, some driving may be required to update the tyre pressure values in the system. During this time ⓘ may illuminate.

If ⓘ illuminates at lower temperatures and extinguishes after some driving, this could be an indicator for approaching a low tyre pressure condition. Check tyre pressure of all four tyres.

If the tyre pressure must be reduced or increased, switch off ignition.

Only mount wheels with pressure sensors, otherwise ⓘ flashes for several seconds then illuminates continuously together with control indicator ⇨ 88 and a corresponding message appears in the DIC.

A spare wheel or temporary spare wheel is not equipped with pressure sensors. TPMS is not operational for these wheels. For the further three wheels, TPMS remains operational.

Control indicator (!) and the corresponding message appears at each ignition cycle until the tyres are inflated to the correct tyre pressure.

Driver Information Centre (DIC) ⇨ 93.

Vehicle messages ⇨ 93.

Puncture

A puncture or severely under-inflated tyre is indicated by illumination of control indicator (!) together with STOP ⇨ 89 and a corresponding message appears in the DIC. Stop vehicle and switch off engine.

Tyre pressure ⇨ 227, Tyre repair kit ⇨ 186, Spare wheel ⇨ 191, Wheel changing ⇨ 189.

Relearn function

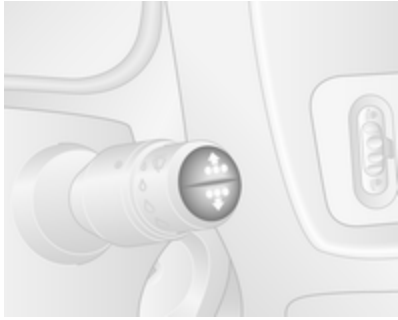

After a puncture has been repaired and the driver has inflated the tyres to the correct tyre pressure, TPMS needs to recalculate.

Tyre pressure ⇨ 227, Tyre repair kit ⇨ 186.

During driving, select the tyre pressure menu in the DIC by pressing button on end of wiper lever. Press and hold button for approx.
5 seconds to initialise recalculation. A corresponding message appears in the DIC.

Several minutes of driving at a speed above 40 km/h may be required to complete the relearn process. The system can only provide limited information during this time.

If problems occur during the relearn process, control indicator (!) remains illuminated and a warning message is displayed in the DIC.

Driver Information Centre (DIC) ⇨ 93.

Vehicle messages ⇨ 93.

General information

The use of tyre chains or commercially available liquid tyre repair kits can impair the function of the system. Factory-approved tyre repair kits can be used.

Tyre repair kit ⇨ 186, Tyre chains ⇨ 186.

External high-power radio equipment could disrupt the tyre pressure monitoring system.

Each time the tyres are replaced, TPMS sensors must be dismounted and serviced by a workshop.

Tread depth

Check tread depth at regular intervals.

Tyres should be replaced for safety reasons at a tread depth of 2-3 mm (4 mm for winter tyres).

For safety reasons it is recommended that the tread depth of the tyres on one axle should not vary by more than 2 mm.

The legally permissible minimum tread depth (1.6 mm) has been reached when the tread has worn down as far as one of the tread wear indicators (TWI). Their position is indicated by markings on the sidewall.

Tyres age, even if they are not used. We recommend tyre replacement every 6 years.

Changing tyre and wheel size

If tyres of a different size than those fitted at the factory are used, it may be necessary to reprogramme the speedometer as well as the nominal tyre pressure and make other vehicle modifications.

After converting to a different tyre size, have the label with tyre pressures replaced.

⚠ Warning

Use of unsuitable tyres or wheels may lead to accidents and will invalidate the vehicle type approval.

Wheel covers

Wheel covers and tyres that are factory approved for the respective vehicle and comply with all of the relevant wheel and tyre combination requirements must be used.

If the wheel covers and tyres used are not factory approved, the tyres must not have a rim protection ridge.

Wheel covers must not impair brake cooling.

⚠ Warning

Use of unsuitable tyres or wheel covers could lead to sudden pressure loss and thereby accidents.

Tyre chains

Tyre chains are only permitted on the drive wheels.

On vehicles with twin rear wheels, tyre chains are only permitted on the outer wheels.

Always use fine mesh chains that add no more than 15 mm to the tyre tread and the inboard sides (including chain lock).

⚠Warning
Damage may lead to tyre blowout.

Wheel covers on steel wheels may come into contact with parts of the chains. In such cases, remove the wheel covers.

Tyre chains may only be used at speeds up to 50 km/h and, when travelling on roads that are free of snow, they may only be used for brief periods since they are subject to rapid wear on a hard road and may snap.

The use of tyre chains is not permitted on the temporary spare wheel.

Tyre repair kit

Minor damage to the tyre tread can be repaired with the tyre repair kit.

Do not remove foreign bodies from the tyres.

Tyre damage exceeding 4 mm or that is at the tyre's sidewall near the rim cannot be repaired with the tyre repair kit.

⚠Warning
Do not drive faster than 80 km/h. Do not use for a lengthy period. Steering and handling may be affected.

If the vehicle has a flat tyre:

Apply the parking brake and engage neutral (manual transmission) or **N** (manual transmission automated).

The tyre repair kit is located under the front seat. Slide seat forwards fully and fold backrest down to access kit.

1. Take the tyre repair kit out from under the front seat.
2. Remove the compressor.
3. Remove the power supply lead(s) and air hose from the stowage compartments on the underside of the compressor.

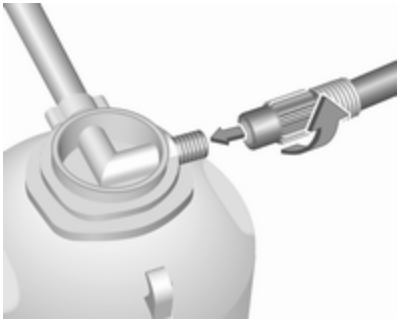

4. Screw the compressor air hose to the connection on the sealant bottle.
5. Fit the sealant bottle into the retainer on the compressor.

   Set the compressor near the tyre in such a way that the sealant bottle is upright.
6. Unscrew valve cap from defective tyre.

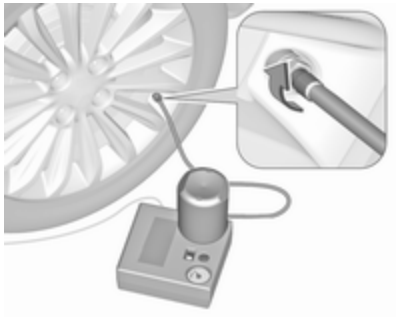

7. Screw the sealant filler hose to the tyre valve.
8. The rocker switch on the compressor must be set to position **O**.

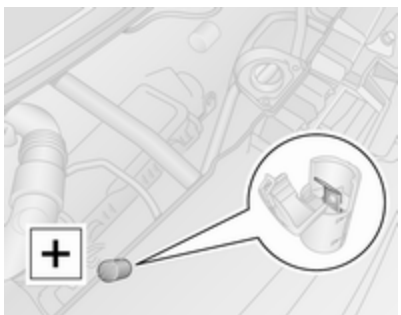

9. Connect the red **+** power supply lead on the compressor to the jump start terminal ⇨ 194.

Note
Depending on model, the jump start terminal may be located at the left-hand or right-hand side of the engine compartment.

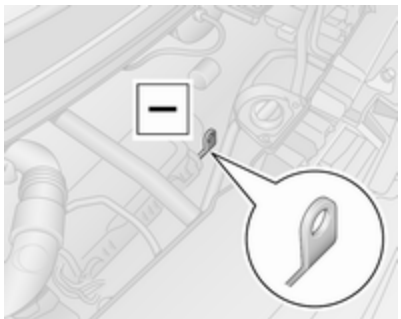

10. Connect the black **−** power supply lead to a vehicle grounding point, e.g. the engine block or an engine mounting bolt.

Note
Depending on tyre repair kit type, it may be necessary to connect the single power supply lead to the

power outlet or cigarette lighter socket.

For this type, the red + and black − power supply leads will not be present.

To avoid discharging the battery, we recommend running the engine.

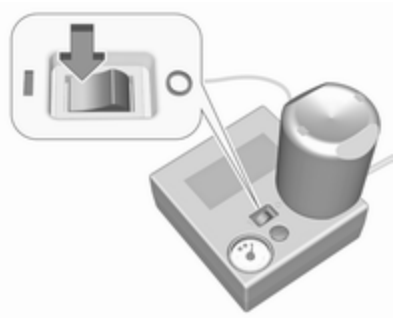

11. Set the rocker switch on the compressor to position **I**. The tyre is filled with sealant.
12. The compressor pressure gauge briefly indicates up to 6 bar. Then the pressure starts to drop.
13. All of the sealant is pumped into the tyre. Then the tyre is inflated.

14. The prescribed tyre pressure should be obtained within 10 minutes. Tyre pressure ⇨ 227. When the correct pressure is obtained, turn off the compressor by setting rocker switch to position **O**.

    If the prescribed tyre pressure is not obtained within 10 minutes, remove the tyre repair kit. Move the vehicle one tyre rotation (approx. 2 metres). Reattach the tyre repair kit and continue the filling procedure for 10 minutes. If the prescribed tyre pressure is still not obtained, the tyre is too badly damaged. Seek the assistance of a workshop.

    Drain excess tyre pressure with the button beside the pressure indicator.

    Do not run the compressor for longer than 10 minutes.
15. Detach the tyre repair kit.
16. Remove any excess sealant using a cloth.
17. Take the label indicating maximum permitted speed from the tyre repair kit and affix in the driver's field of view.
18. Screw the sealant filler hose to the free connection on the sealant bottle. This prevents sealant from escaping. Store the sealant bottle in the plastic bag. Stow tyre repair kit under the front seat.

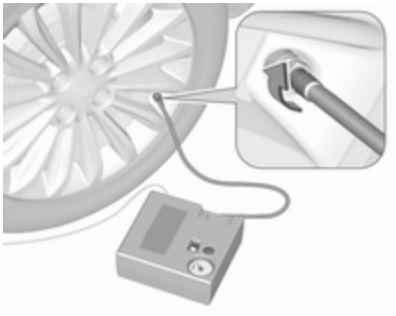

19. Continue driving immediately so that the sealant is evenly distributed throughout the tyre. After driving approx. 10 km, but no more than 10 minutes, stop and check tyre pressure using the compressor. Screw compressor air hose directly onto tyre valve and compressor when doing this.
20. If the tyre pressure is more than 3.1 bar, set it to the correct value. Repeat the procedure until there is no more loss of pressure.

    If the tyre pressure has fallen below 3.1 bar, the vehicle must not be driven. Seek the assistance of a workshop.
21. Stow tyre repair kit under the front seat.

Note
The driving characteristics of the repaired tyre are severely affected, therefore have this tyre replaced.

If unusual noise is heard or the compressor becomes hot, turn compressor off for at least 30 minutes.

The built-in safety valve opens at a pressure of 7 bar.

Note the expiry date of the kit. After this date its sealing capability is no longer guaranteed. Pay attention to storage information on sealant bottle.

Replace the used sealant bottle. Dispose of the bottle as prescribed by applicable laws.

The compressor and sealant can be used from approx. -30 °C.

Wheel changing

Some vehicles are equipped with a tyre repair kit instead of a spare wheel ⇨ 186.

Make the following preparations and observe the following information:

- Park the vehicle on a level, firm and non-slippery surface. The front wheels must be in the straight-ahead position.
- Apply the parking brake and engage first gear or reverse gear (manual transmission) or **N** (manual transmission automated).
- Switch off the air suspension system ⇨ 126.
- Remove the spare wheel ⇨ 191.
- Never change more than one wheel at a time.
- Use the jack only to change wheels in case of puncture, not for seasonal winter or summer tyre change.
- The jack is maintenance-free.

- If the ground on which the vehicle is standing is soft, a solid board (max. 1 cm thick) should be placed under the jack.
- No people or animals may be in the vehicle when it is jacked-up.
- Never crawl under a jacked-up vehicle.
- Do not start the engine when the vehicle is raised on the jack.
- Clean wheel bolts/nuts and their threads before mounting the wheel.

⚠Warning

Do not grease wheel bolt, wheel nut and wheel nut cone.

1. Remove the wheel cover using the hook supplied. Vehicle tools ⇨ 180.
2. Install the wheel wrench ensuring that it locates securely and loosen each wheel bolt/nut by half a turn.

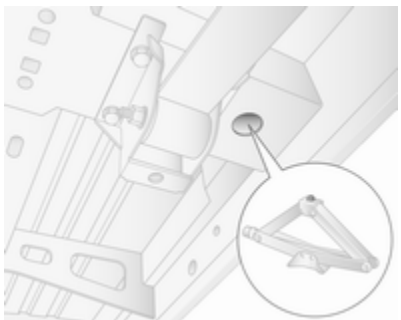

3. Vehicles with Front-wheel drive:

   Raise vehicle by placing lifting pad spigot of the jack under the jacking hole located nearest the wheel concerned.

   Ensure the jack is positioned correctly. The jack base must be on the ground directly below the jacking hole in a manner that prevents it from slipping.

   Attach wheel wrench onto the jack and raise the vehicle by turning the wrench until the wheel is clear of the ground.

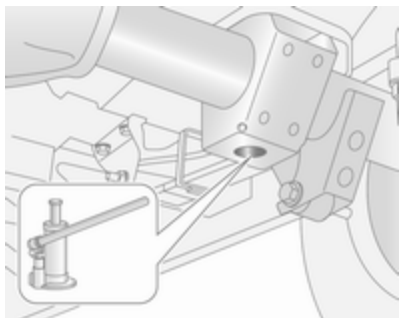

   Vehicles with Rear-wheel drive:

   Pay attention to the operating instructions supplied with the hydraulic jack and assemble the parts required as specified.

   Position the adapter at the jacking hole located nearest the wheel concerned.

Ensure the jack is positioned correctly. The jack head must be level with the jacking hole. Pump the jack by pressing the wheel wrench, to position the base plate correctly.

Raise the vehicle by pressing the wheel wrench until the wheel is clear of the ground.

4. Unscrew wheel bolts/nuts completely and wipe clean with a cloth.

   Put wheel bolts/nuts somewhere where the threads will not be soiled.
5. Change the wheel.
6. Screw in the wheel bolts/nuts.
7. Lower vehicle.
8. Install the wheel wrench ensuring that it locates securely and tighten each wheel bolt/nut in a crosswise sequence. Tightening torque is: 172 Nm (Front-wheel drive), 235 Nm (Rear-wheel drive with twin rear wheels), 264 Nm (Rear-wheel drive with single rear wheels).
9. Refit wheel cover.

   Note
   If applicable, fit anti-theft bolts nearest the tyre valve (otherwise it may not be possible to refit the wheel cover).
10. Stow the replaced wheel ⇨ 191 and the vehicle tools ⇨ 180.
11. Have the new wheel balanced on the vehicle. Check the tyre pressure of the installed tyre ⇨ 227 and also the wheel bolt/nut torque as soon as possible.

Have the defective tyre renewed or repaired.

Spare wheel

Some vehicles are equipped with a tyre repair kit instead of a spare wheel ⇨ 186.

If mounting a spare wheel which is different from the other wheels, this wheel might be classified as a temporary spare wheel and the corresponding speed limits apply, even though no label indicates this. Seek the assistance of a workshop to check the applicable speed limit.

Caution

The use of a spare wheel that is smaller than the other wheels or in combination with winter tyres could affect driveability. Have the defective tyre replaced as soon as possible.

The spare wheel is held under the vehicle frame using a winch and secured by tightening a cable using the wheel wrench and adapters (depending on vehicle).

It may be necessary to jack the vehicle up to gain access to the spare wheel on a fully loaded vehicle with a flat rear tyre.

To release the spare wheel, loosen cable by connecting the wheel wrench and adapters (depending on vehicle) to the slot position illustrated and lower the wheel fully by turning wrench clockwise.

Caution

Only use the wheel wrench and adapters (depending on vehicle) to lower the spare wheel.

The use of pneumatic tools is prohibited. This may result in damage to the winch cable and equipment.

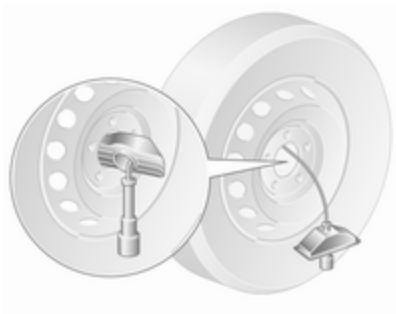

Place wheel upright, unclip retainer from wheel rim and release the wheel from the cable and connected retainer by routing these components through the centre of the wheel.

Twin rear wheel vehicles have an additional mounting plate attached to the spare wheel. Before using the wheel, undo the nut and remove the mounting plate.

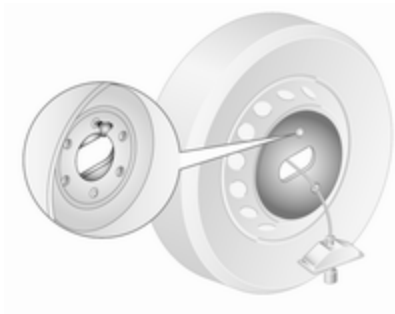

When reinstalling a spare wheel, first attach the mounting plate (twin rear wheel vehicles) and secure with the nut.

Place wheel upright, then route the cable and connected retainer from the front of the wheel (side with tyre valve) and through the centre of the wheel. Attach the retainer and clip it into place, ensuring it is correctly positioned and that the front of the wheel (side with tyre valve) will be facing upwards when reinstalled.

Place wheel below the vehicle frame, directly beneath the winch mechanism.

Then tighten cable using the wheel wrench and adapters by connecting to the slot position illustrated above and turning wrench anticlockwise until the wheel is secured in the fully raised position.

⚠Warning

Ensure the front of the wheel (side with tyre valve) is facing upwards when the spare wheel is reinstalled below the vehicle frame.

Temporary spare wheel

Caution

The use of a spare wheel that is smaller than the other wheels or in combination with winter tyres could affect driveability. Have the defective tyre replaced as soon as possible.

Only mount one temporary spare wheel. Do not drive faster than 80 km/h. Take curves slowly. Do not use for a long period of time.

If your vehicle gets a flat tyre on the rear while towing another vehicle, mount the temporary spare wheel in the front and the full tyre in the rear.

Tyre chains ⇨ 186.

Summer and winter tyres

If you use winter tyres, the spare wheel may still be fitted with a summer tyre.

If you use the spare wheel when it is fitted with a summer tyre the vehicle's driveability may be affected, especially on slippery road surfaces.

Directional tyres

Fit directional tyres such that they roll in the direction of travel. The rolling direction is indicated by a symbol (e.g. an arrow) on the sidewall.

The following applies to tyres fitted opposing the rolling direction:

- Driveability may be affected. Have the defective tyre renewed or repaired as soon as possible and fit it instead of the spare wheel.

- Do not drive faster than 80 km/h.
- Drive particularly carefully on wet and snow-covered road surfaces.

Jump starting

Do not start with a quick charger.

A vehicle with a discharged battery can be started using jump leads and the battery of another vehicle.

⚠Warning

Be extremely careful when starting with jump leads. Any deviation from the following instructions can lead to injuries or damage caused by battery explosion or damage to the electrical systems of both vehicles.

⚠Warning

Avoid contact with eyes, skin, fabrics, and painted surfaces. The fluid contains sulphuric acid which can cause injuries and damage in the event of direct contact.

Caution

The air suspension system must be switched off prior to jump starting.

⚠Warning

Avoid contact of the battery with eyes, skin, fabrics and painted surfaces. The fluid contains sulphuric acid which can cause injuries and damage in the event of direct contact.

- Never expose the vehicle battery to naked flames or sparks.
- A discharged vehicle battery can already freeze at a temperature of 0 °C. Defrost the frozen vehicle battery before connecting jump leads.
- Wear eye protection and protective clothing when handling a vehicle battery.

- Use a booster battery with the same voltage (12 volts). Its capacity (Ah) must not be much less than that of the discharged vehicle battery.
- Use jump leads with insulated terminals and a cross section of at least 25 mm^2.
- Do not disconnect the discharged battery from the vehicle.
- Switch off all unnecessary electrical consumers.
- Switch off the air suspension system ⇨ 126.
- Do not lean over the vehicle battery during jump starting.
- Do not allow the terminals of one lead to touch those of the other lead.
- The vehicles must not come into contact with each other during the jump starting process.
- Apply the parking brake and engage neutral (manual transmission) or **N** (manual transmission automated).

Jump start terminal

In the event of a discharged vehicle battery, the jump start terminal enables the vehicle to be started without the need to access the battery inside the vehicle.

The jump start terminal is located in the engine compartment and identified by a "**+**" sign on the red insulating cover. Lift the red insulating cover to access the terminal connector.

Ensure the red insulating cover is latched back into position when not in use.

Jump starting procedure

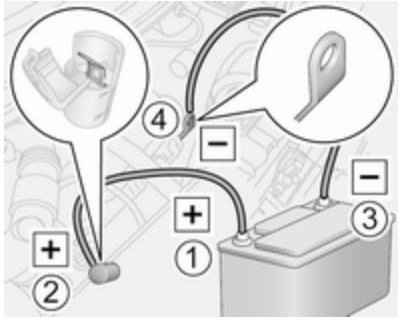

Depending on model, the jump start terminal may be located at the left-hand or right-hand side of the engine compartment.

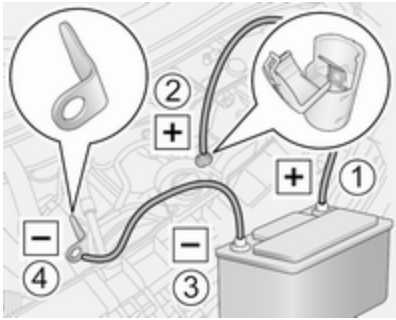

Lead connection order:

1. Connect the red lead to the positive terminal of the booster battery.
2. Connect the other end of the red lead to the jump start terminal of the vehicle with the discharged vehicle battery.
3. Connect the black lead to the negative terminal of the booster battery.
4. Connect the other end of the black lead to a vehicle grounding point, such as the engine block or an engine mounting bolt. Connect as far away from the discharged vehicle battery as possible, however at least 60 cm.

Route the leads so that they cannot catch on rotating parts in the engine compartment.

To start the engine:

1. Start the engine of the vehicle providing the jump start.
2. After 5 minutes, start the other engine. Start attempts should be made for no longer than 15 seconds at an interval of 1 minute.
3. Allow both engines to idle for approx. 3 minutes with the leads connected.
4. Switch on electrical consumers (e.g. headlights, heated rear window) of the vehicle receiving the jump start.
5. Reverse above sequence exactly when removing leads.

Towing

Towing the vehicle

The towing eye is stowed with the vehicle tools ⇨ 180.

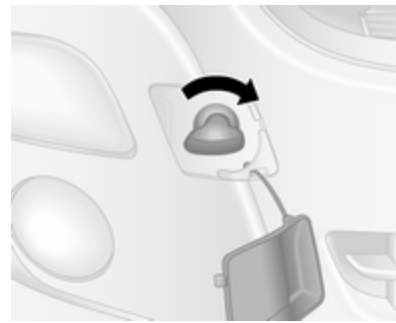

Disengage the cover using a suitable tool and remove.

Screw the towing eye clockwise into the front towing point and tighten fully using the wheel wrench.

Attach a tow rope - or better still a tow rod - to the towing eye, never to the bumper or front suspension units.

Caution

Do not tow the vehicle from the rear. The front towing eye must only be used for towing and not recovering a vehicle.

Switch on ignition to permit operation of brake lights, horn and windscreen wipers, and move the steering wheel slightly to release the steering wheel lock.

Switch off the air suspension system ⇨ 126.

Transmission in neutral.

Caution

Vehicles with manual transmission automated: If neutral cannot be selected, the vehicle must only be towed with the drive wheels raised off the ground.

The vehicle should always be towed with the ignition switched off.

Manual transmission automated ⇨ 135.

Caution

Drive slowly. Do not drive jerkily. Excessive tractive force can damage the vehicle.

When the engine is not running, considerably more force is needed to brake and steer.

To prevent the entry of exhaust fumes from the towing vehicle, switch on the air recirculation system ⇨ 107 and close the windows.

Seek the assistance of a workshop.

After towing, unscrew the towing eye and refit the cover.

Towing another vehicle

Attach a tow rope - or better still a tow rod - to the rear towing eye, never to the rear axle and suspension units.

The rear towing eye must only be used for towing and not recovering a vehicle.

Caution

Drive slowly. Do not drive jerkily. Excessive tractive force can damage the vehicle.

Appearance care

Exterior care

Locks

The locks are lubricated at the factory using a high quality lock cylinder grease. Use de-icing agent only when absolutely necessary, as this has a degreasing effect and impairs lock function. After using a de-icing agent, have the locks regreased by a workshop.

Washing

The paintwork of your vehicle is exposed to environmental influences. Wash and wax your vehicle regularly. When using automatic vehicle washes, select a programme that includes waxing. Restrictions for filmed or matt painted body parts or decor tapes, see "Polishing and waxing".

Bird droppings, dead insects, resin, pollen and the like should be cleaned off immediately, as they contain aggressive constituents which can cause paint damage.

If using a vehicle wash, comply with the vehicle wash manufacturer's instructions. The windscreen wipers must be switched off and the exterior mirrors must be folded in. Remove antenna and external accessories such as roof racks etc.

If you wash your vehicle by hand, make sure that the insides of the wheel housings are also thoroughly rinsed out.

Clean edges and folds on opened doors and the bonnet as well as the areas they cover.

Clean bright metal mouldings with a cleaning solution approved for aluminium to avoid damages.

Caution

Always use a cleaning agent with a pH value of 4 to 9.

Do not use cleaning agents on hot surfaces.

Have the door hinges of all doors greased by a workshop.

Do not clean the engine compartment with a steam-jet or high-pressure jet cleaner.

Thoroughly rinse and leather-off the vehicle. Rinse leather frequently. Use separate leathers for painted and glass surfaces: remnants of wax on the windows will impair vision.

Do not use hard objects to remove spots of tar. Use tar removal spray on painted surfaces.

Exterior lights

Headlight and other light covers are made of plastic. Do not use any abrasive or caustic agents, do not use an ice scraper, and do not clean them dry.

Polishing and waxing

Wax the vehicle regularly (at the latest when water no longer beads). Otherwise, the paintwork will dry out.

Polishing is necessary only if the paint has become dull or if solid deposits have become attached to it.

Paintwork polish with silicone forms a protective film, making waxing unnecessary.

Unpainted plastic body parts must not be treated with wax or polishing agents.

Matt filmed body parts or decor tapes must not be polished, to avoid gleaming. Do not use hot wax programmes in automatic car washes if the vehicle is equipped with these parts.

Matt painted decor parts, e.g. mirror housing cover, must not be polished. Otherwise these parts would become agleam or the colour would be dissolved.

Windows and windscreen wiper blades

Use a soft lint-free cloth or chamois leather together with window cleaner and insect remover.

When cleaning the rear window from inside, always wipe in parallel to the heating element to prevent damage.

For mechanical removal of ice, use a sharp-edged ice scraper. Press the scraper firmly against the glass so that no dirt can get under it and scratch the glass.

Remove dirt residues from smearing wiper blades by using a soft cloth and window cleaner. Also make sure to remove any residues such as wax, insect residues and similar from the window.

Wheels and tyres

Do not use high-pressure jet cleaners.

Clean rims with a pH-neutral wheel cleaner.

Rims are painted and can be treated with the same agents as the body.

Paintwork damage

Rectify minor paintwork damage with a touch-up pen before rust forms. Have more extensive damage or rust areas repaired by a workshop.

Underbody

Some areas of the vehicle underbody have a PVC undercoating while other critical areas have a durable protective wax coating.

After the underbody is washed, check the underbody and have it waxed if necessary.

Bitumen/rubber materials could damage the PVC coating. Have underbody work carried out by a workshop.

Before and after winter, wash the underbody and have the protective wax coating checked.

Towing equipment

Do not clean the coupling ball bar with a steam-jet or high-pressure jet cleaner.

Interior care

Interior and upholstery

Only clean the vehicle interior, including the instrument panel fascia and panelling, with a dry cloth or interior cleaner.

Clean leather upholstery with clear water and a soft cloth. In case of heavy soiling, use leather care.

The instrument cluster and the displays should only be cleaned using a soft damp cloth. If necessary use a weak soap solution.

Clean fabric upholstery with a vacuum cleaner and brush. Remove stains with an upholstery cleaner.

Clothing fabrics may not be colourfast. This could cause visible discolourations, especially on light-coloured upholstery. Removable stains and discolourations should be cleaned as soon as possible.

Clean seat belts with lukewarm water or interior cleaner.

Caution

Close Velcro fasteners as open Velcro fasteners on clothing could damage seat upholstery.

The same applies to clothing with sharp-edged objects, like zips or belts or studded jeans.

Plastic and rubber parts

Plastic and rubber parts can be cleaned with the same cleaner as used to clean the body. Use interior cleaner if necessary. Do not use any other agent. Avoid solvents and petrol in particular. Do not use high-pressure jet cleaners.

Service and maintenance

General information **201**
Service information 201
Recommended fluids, lubricants and parts **203**
Recommended fluids and lubricants 203

General information

Service information

In order to ensure economical and safe vehicle operation and to maintain the value of your vehicle, it is of vital importance that all maintenance work is carried out at the proper intervals as specified.

The detailed, up-to-date service schedule for the vehicle is available at the workshop.

Service display ⇨ 83.

Engine identification ⇨ 206.

European service intervals - except Bus

Maintenance of your vehicle is required every 40,000 km or after 2 years, whichever occurs first, unless otherwise indicated by the service display.

A shorter service interval can be valid for severe driving behaviour, e.g. for taxis and police vehicles.

European service intervals - Bus only

Maintenance of your vehicle is required every 30,000 km or after 1 year, whichever occurs first, unless otherwise indicated by the service display.

The European service intervals are valid for the following countries:

Andorra, Austria, Belgium, Croatia, Czech Republic, Denmark, Estonia, Finland, France, Germany, Greece, Hungary, Iceland, Ireland, Italy, Latvia, Liechtenstein, Lithuania, Luxembourg, Netherlands, Norway, Poland, Portugal, Slovakia, Slovenia, Spain, Sweden, Switzerland, United Kingdom.

International service intervals

Israel:
Maintenance of your vehicle is required every 40,000 km or after 1 year, whichever occurs first, unless otherwise indicated by the service display.

Albania, Bosnia-Herzegovina, Kosovo, Macedonia, Montenegro, Serbia:
Maintenance of your vehicle is required every 30,000 km or after 2 years, whichever occurs first, unless otherwise indicated by the service display.

Romania, Bulgaria, Moldova, Cyprus:
Maintenance of your vehicle is required every 30,000 km or after 2 years, whichever occurs first, unless otherwise indicated by the service display.

Australia, New Zealand:
Maintenance of your vehicle is required every 30,000 km or after 2 years, whichever occurs first, unless otherwise indicated by the service display.

Turkey:
Maintenance of your vehicle is required every 20,000 km or after 1 year, whichever occurs first, unless otherwise indicated by the service display.

Morocco:
Maintenance of your vehicle is required every 20,000 km or after 1 year, whichever occurs first, unless otherwise indicated by the service display.

South Africa:
Maintenance of your vehicle is required every 15,000 km or after 1 year, whichever occurs first, unless otherwise indicated by the service display.

Russia, Ukraine, Belarus, Kazakhstan:
Maintenance of your vehicle is required every 15,000 km or after 1 year, whichever occurs first, unless otherwise indicated by the service display.

Algeria, Tunisia:
Maintenance of your vehicle is required every 10,000 km or after 1 year, whichever occurs first, unless otherwise indicated by the service display.

International:
Maintenance of your vehicle is required every 15,000 km or after 1 year, whichever occurs first, unless otherwise indicated by the service display.

International countries include:

Malta, Singapore.

International +:
Maintenance of your vehicle is required every 10,000 km or after 1 year, whichever occurs first, unless otherwise indicated by the service display.

International **+** countries include: To be defined.

International ++:
Maintenance of your vehicle is required every 8,000 km or after 1 year, whichever occurs first, unless otherwise indicated by the service display.

International **++** countries include: Hong Kong.

Confirmations

Confirmation of service is recorded in the Service and warranty booklet. The date and mileage is completed with the stamp and signature of the servicing workshop.

Make sure that the Service and warranty booklet is completed correctly as continuous proof of service is essential if any warranty or goodwill claims are to be met, and is also a benefit when selling the vehicle.

Service display

The service interval is based on several parameters depending on usage.

The service display, located in the Driver Information Centre (DIC), indicates when the next service is due. Seek the assistance of a workshop.

Service display ⇨ 83.

Engine oil lever monitor ⇨ 82.

Recommended fluids, lubricants and parts

Recommended fluids and lubricants

Only use products that meet the recommended specifications.

⚠ Warning

Operating materials are hazardous and could be poisonous. Handle with care. Pay attention to information given on the containers.

Engine oil

Engine oil is identified by its quality and its viscosity. Quality is more important than viscosity when selecting which engine oil to use. The oil quality ensures e.g. engine cleanliness, wear protection and oil aging control, whereas viscosity grade gives information on the oil's thickness over a temperature range.

Dexos is the newest engine oil quality that provides optimum protection for diesel engines. If it is unavailable, engine oils of other listed qualities must be used.

Select the appropriate engine oil based on its quality and on the minimum ambient temperature ⇨ 207.

Topping up engine oil

Engine oils of different manufacturers and brands can be mixed as long as they comply with the required engine oil quality and viscosity.

Use of engine oil with only ACEA A1/B1 or only A5/B5 quality is prohibited, since it can cause long-term engine damage under certain operating conditions.

Select the appropriate engine oil based on its quality and on the minimum ambient temperature ⇨ 207.

Additional engine oil additives

The use of additional engine oil additives could cause damage and invalidate the warranty.

Engine oil viscosity grades

The SAE viscosity grade gives information of the thickness of the oil.

Multigrade oil is indicated by two figures, e.g. SAE 5W-30. The first figure, followed by a W, indicates the low temperature viscosity and the second figure the high temperature viscosity.

Select the appropriate viscosity grade depending on the minimum ambient temperature ⇨ 207.

All of the recommended viscosity grades are suitable for high ambient temperatures.

Coolant and antifreeze

Use only silicate-free long life coolant (LLC) antifreeze approved for the vehicle. Consult a workshop.

The system is factory filled with coolant designed for excellent corrosion protection and frost protection down to approx. -28 °C. This concentration should be maintained all year round. The use of additional coolant additives that intend to give additional corrosion protection or seal against minor leaks can cause function problems. Liability for consequences resulting from the use of additional coolant additives will be rejected.

Brake fluid

Over time, brake fluid absorbs moisture which will reduce braking effectiveness. The brake fluid should therefore be replaced at the specified interval.

AdBlue

Only use AdBlue to reduce the nitrogen oxides in the exhaust emission ⇨ 129.

Technical data

Vehicle identification **205**
Vehicle Identification Number .. 205
Identification plate 206
Engine identification 206
Vehicle data **207**
Recommended fluids and lubricants 207
Engine data 208
Vehicle weight 210
Vehicle dimensions 217
Capacities 226
Tyre pressures 227

Vehicle identification

Vehicle Identification Number

The Vehicle Identification Number (VIN) is visible through the windscreen.

The VIN is also displayed behind a removable plastic cover on the front right hand door step. Unclip the covers using a flat blade screwdriver to access.

Identification plate

The identification plate is located on the right hand door pillar.

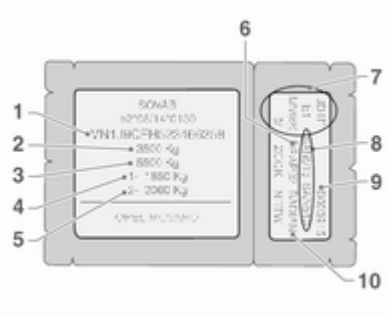

Information on identification plate:

1 : vehicle identification number
2 : permissible gross vehicle weight rating in kg
3 : permissible gross train weight in kg
4 : maximum permissible front axle load in kg
5 : maximum permissible rear axle load in kg
6 : trim code
7 : technical specifications of vehicle, including: Vehicle paint code, equipment level and vehicle type
8 : additional equipment specification
9 : fabrication number
10 : interior trim code

Note
The identification plate on your vehicle may differ from the illustration shown.

The combined total of front and rear axle loads must not exceed the permissible gross vehicle weight. For example, if the front axle is bearing its maximum permissible load, the rear axle can only bear a load that is equal to the gross vehicle weight minus the front axle load.

The technical data is determined in accordance with European Community standards. We reserve the right to make modifications. Specifications in the vehicle documents always have priority over those given in this manual.

Engine identifier code and engine number

Stamped on the engine cylinder block and on a label attached to the timing chain cover, depending on variant.

Engine identification

The technical data tables show the engine identifier code. Engine data ⇨ 208.

To identify the respective engine, refer to the engine power in the EEC Certificate of Conformity provided with your vehicle or other national registration documents.

Vehicle data

Recommended fluids and lubricants

Required engine oil quality

Engine oil quality: Europe	
dexos 2	✓

For countries with International service interval ⇨ 201, you may use the oil qualities listed below:

Engine oil quality: International	
dexos 2	✓
GM-LL-A/B-025	✓
ACEA C3 diesel engines with DPF	✓
ACEA A3/B4 diesel engines without DPF	✓

Engine oil viscosity grades

Ambient temperature	
down to -25 °C	SAE 5W-30 or SAE 5W-40
below -25 °C	SAE 0W-30 or SAE 0W-40

Engine data

Sales designation	2.3 CDTi 110[1)]	2.3 CDTi 125[2)]	2.3 CDTi 150[1)]
Engine identifier code	**M9T**	**M9T**	**M9T**
Number of cylinders	4	4	4
Piston displacement [cm^3]	2298	2298	2298
Engine power [kW] (PS)	81 (110)	92 (125)	110 (150)
at rpm	3500	3500	3500
Torque [Nm]	285	310	350
at rpm	1250	1250	1500
Fuel type	Diesel	Diesel	Diesel

1) Euro 5.
2) Euro 4, Euro 5.

Sales designation	2.3 CDTi BiTurbo 135[3)]	2.3 CDTi BiTurbo 165[3)]	2.3 CDTi BiTurbo 140[4)]	2.3 CDTi BiTurbo 170[4)]
Engine identifier code	**M9T**	**M9T**	**M9T**	**M9T**
Number of cylinders	4	4	4	4
Piston displacement [cm^3]	2298	2298	2298	2298
Engine power [kW] (PS)	100 (135)	120 (165)	103 (140)	125 (170)
at rpm	3500	3500	3500	3500

Sales designation	2.3 CDTi BiTurbo 135[3]	2.3 CDTi BiTurbo 165[3]	2.3 CDTi BiTurbo 140[4]	2.3 CDTi BiTurbo 170[4]
Engine identifier code	M9T	M9T	M9T	M9T
Torque [Nm]	340/350[5]	360	360	380
at rpm	1500	1500	1500	1500
Fuel type	Diesel	Diesel	Diesel	Diesel

3) Euro 5.
4) Euro 6 with Adblue.
5) Front-wheel drive/Rear-wheel drive.

Adblue ⇨ 129.

Vehicle weight

Kerb weight, basic model without any optional equipment

Optional equipment and accessories increase the kerb weight.

Van

Drive wheels	Length	Roof height	Gross vehicle weight	Kerb weight
Front-wheel drive	L1	H1	2800	1806
			3300	1811
			3500	1816
		H2	2800	1834
			3300	1839
			3500	1844
	L2	H2	3300	1885
			3500	1890
		H3	3300	1921
			3500	1931
	L3	H2	3500	1970
		H3	3500	2010

Drive wheels	Length	Roof height	Gross vehicle weight	Kerb weight
Rear-wheel drive	L3	H2	3500[6)]	2159
			3500[7)]	2246
			4500	2246
		H3	3500[6)]	2148
			3500[7)]	2279
			4500	2279
	L4	H2	3500[6)]	2270
			3500[7)]	2324
			4500	2324
		H3	3500[6)]	2300
			3500[7)]	2366
			4500	2366

6) With Single rear wheels.
7) With Twin rear wheels.

Doublecab

Drive wheels	Length	Roof height	Gross vehicle weight	Kerb weight
Front-wheel drive	L1	H1	3300	1970
			3500	1975
	L1	H2	3300	1995
			3500	2000
	L2	H2	3300	2094
			3500	2102
	L3	H2	3500	2177
Rear-wheel drive	L3	H2	3500[6)]	2324
			3500[7)]	2453
			4500[7)]	2453

6) With Single rear wheels.
7) With Twin rear wheels.

Combi

Drive wheels	Length	Roof height	Gross vehicle weight	Kerb weight
Front-wheel drive	L1	H1	3300	2002
	L2	H2	3500	2149

Bus

Drive wheels	Length	Roof height	Gross vehicle weight	Kerb weight
Front-wheel drive	L3	H2	3500	2493
		H3	3500	-[8]
Rear-wheel drive	L4	H3	3500	-[8]

8) Figure not available at time of printing. Refer to identification plate on the right hand door pillar.

Chassis Cab

Drive wheels	Length	Roof height	Gross vehicle weight	Kerb weight
Front-wheel drive	L2	H1	3500	1686
	L3	H1	3500	1707
Rear-wheel drive	L2	H1	3500[6)]	1835
			3500[7)]	1967
			4500[7)]	1967
	L3	H1	3500[6)]	1860
			3500[7)]	1975
			4500[7)]	1975
	L4	H1	3500[7)]	2005
			4500[7)]	2005

6) With Single rear wheels.
7) With Twin rear wheels.

Crew Cab

Drive wheels	Length	Roof height	Gross vehicle weight	Kerb weight
Front-wheel drive	L2	H1	3500	1887
	L3	H1	3500	1915
Rear-wheel drive	L2	H1	3500[6)]	2037
	L3	H1	3500[6)]	2068
			3500[7)]	2154
			4500[7)]	2154
	L4	H1	3500[7)]	2223
			4500[7)]	2223

6) With Single rear wheels.
7) With Twin rear wheels.

Platform Cab

Drive wheels	Length	Roof height	Gross vehicle weight	Kerb weight
Front-wheel drive	L1	H1	3500	1570
	L2	H1	3500	1578
		H2	3500	1593
	L3	H1	3500	1599
		H2	3500	1613

Note
Kerb weight figures shown indicate the minimum vehicle weight according to type approval, including all fluids, vehicle tools and a 90% fuel load. Excludes the weight of the driver and deletable options, e.g. spare wheel, bulkhead and sliding side door. Final weight may vary according to the specification of the vehicle, e.g. options, deleted options and accessories.

Note
Kerb weight and gross vehicle weight increase on models fitted with bad road equipment package - refer to identification plate ⇨ 206.

Loading information ⇨ 73.

Vehicle dimensions

Van, Doublecab	Front-wheel drive		
Gross vehicle weight	2800, 3300, 3500	3300, 3500	3500
Size	L1	L2	L3
Length [mm]	5048	5548	6198
Width without mirrors [mm]	2070	2070	2070
Width with mirrors [mm]	2470	2470	2470
Height - unladen (without antenna) [mm] H1	2307	-	-
H2	2500	2500	2488
H3	-	2749	2744
Wheelbase [mm]	3182	3682	4332
Track width [mm] Front	1750	1750	1750
Rear	1730	1730	1730

Van, Doublecab	Rear-wheel drive	
Gross vehicle weight	3500, 4500	3500, 4500
Size	L3	L4
Length [mm]	6198	6848
Width without mirrors [mm]	2070	2070
Width with mirrors [mm]	2470	2470
Height - unladen (without antenna) [mm] H2	2527[9)]/2549[10)]	2557
H3	2786[9)]/2815[10)]	2808
Wheelbase [mm]	3682	4332
Track width [mm] Front	1750	1750
Rear	1730[9)]/1612[10)]	1612

9) With Single rear wheels.
10) With Twin rear wheels.

Combi	Front-wheel drive	
Gross vehicle weight	2800, 3500	2800, 3500
Size	L1	L2
Length [mm]	5048	5548
Width without exterior mirrors [mm]	2070	2070
Width with mirrors [mm]	2470	2470
Height - unladen (without antenna) [mm] H1	2307	-
H2	-	2500
Wheelbase [mm]	3182	3682
Track width [mm] Front	1750	1750
Rear	1730	1730

Bus	Front-wheel drive	Rear-wheel drive
Gross vehicle weight	**3900**	**4500**
Size	**L3**	**L4**
Length [mm]	6198	6848
Width without mirrors [mm]	2070	2070
Width with mirrors [mm]	2470	2470
Wheelbase [mm]	4332	4332
Height - unladen (without antenna) [mm] H2	2488	-
H3	-[11]	2808
Track width [mm] Front	1750	1750
Rear	1730	1612

[11] Figure not available at time of printing. Refer to identification plate on the right hand door pillar.

Chassis Cab	Front-wheel drive		Rear-wheel drive				
Gross vehicle weight	3500	3500	3500[12)]	3500[12)]	3500[13)], 4500	3500[13)], 4500	3500[13)], 4500
Size	L2	L3	L2	L3	L2	L3	L4
Length [mm]	5643	6293	5643	6293	5643	6193	6843
Width without mirrors [mm]	2070	2070	2070	2070	2070	2070	2070
Width with mirrors [mm]	2470	2470	2470	2470	2470	2470	2470
Height - unladen (without antenna) [mm] H1	2265	2258	2284	2283	2284	2283	2273
Wheelbase [mm]	3682	4332	3682	4332	3682	3682	4332
Track width [mm] Front	1750	1750	1750	1750	1750	1750	1750
Rear	1730	1730	1730	1730	1730	1612	1612

12) With Single rear wheels.
13) With Twin rear wheels.

Crew Cab	Front-wheel drive		Rear-wheel drive				
Gross vehicle weight	3500	3500	3500[14]	3500[15]	3500[14]	3500[15], 4500	3500[15], 4500
Size	L2	L3	L2	L2	L3	L3	L4
Length [mm]	5643	6293	5643	5643	6293	6193	6843
Width without mirrors [mm]	2070	2070	2070	2070	2070	2070	2070
Width with mirrors [mm]	2470	2470	2470	2470	2470	2470	2470
Height - unladen (without antenna) [mm] H1	2273	2263	2272	2301	2285	2285	2286
Wheelbase [mm]	3682	4332	3682	3682	4332	3682	4332
Track width [mm] Front	1750	1750	1750	1750	1750	1750	1750
Rear	1730	1730	1730	1612	1730	1730	1612

[14] With Single rear wheels.
[15] With Twin rear wheels.

Platform Cab	Front-wheel drive		
Gross vehicle weight	**3500**	**3500**	**3500**
Size	**L1**	**L2**	**L3**
Length [mm]	5030	5530	6180
Width without mirrors [mm]	2070	2070	2070
Width with mirrors [mm]	2470	2470	2470
Height - unladen (without antenna) [mm] H1	2276	2270	2264
H2	-	2463	2457
Wheelbase [mm]	3182	3682	4332
Track width [mm] Front	1750	1750	1750
Rear	1730	1730	1730

Loadspace dimensions

Van	Front-wheel drive					
Length	L1		L2		L3	
Roof height	H1	H2	H2	H3	H2	H3
Gross vehicle weight	2800, 3300, 3500	2800, 3300, 3500	3300, 3500	3500	3500	3500
Maximum rear door aperture height [mm]	1627	1820	1820	1820	1820	1820
Rear door aperture width (at floor) [mm]	1577	1577	1577	1577	1577	1577
Maximum load area height [mm]	1700	1894	1894	2144	1894	2144
Maximum load area width [mm]	1765	1765	1765	1765	1765	1765
Width between wheel arches [mm]	1380	1380	1380	1380	1380	1380
Maximum load floor length [mm]	2583	2583	3083	3083	3733	3733
Sliding side door aperture height [mm]	1581	1780	1780	1780	1780	1780
Sliding side door aperture width [mm]	1050	1050	1270	1270	1270	1270

Van	Rear-wheel drive							
Length	L3				L4			
Roof height	H2		H3		H2		H3	
Gross vehicle weight	3500	4500	3500	4500	3500	4500	3500	4500
Maximum rear door aperture height [mm]	1724	1724	1724	1724	1724	1724	1724	1724
Rear door aperture width (at floor) [mm]	1577	1577	1577	1577	1577	1577	1577	1577
Maximum load area height [mm]	1798	1798	2048	2048	1798	1798	2048	2048
Maximum load area width [mm]	1765	1765	1765	1765	1765	1765	1765	1765
Width between wheel arches - with Single rear wheels [mm]	1380	-	1380	-	1380	-	1380	-
Width between wheel arches - with Twin rear wheels [mm]	1080	1080	1080	1080	1080	1080	1080	1080
Maximum load floor length [mm]	3733	3733	3733	3733	4383	4383	4383	4383
Sliding side door aperture height [mm]	1684	1684	1684	1684	1684	1684	1684	1684
Sliding side door aperture width [mm]	1270	1270	1270	1270	1270	1270	1270	1270

Capacities

Engine oil

Engine	M9T
Engine oil including filter [l] (approx.)	8.0 Front-wheel drive 8.9 Rear-wheel drive
between MIN and MAX [l] (approx.)	1.5 - 2.0

Fuel tank

Fuel tank, nominal capacity [l]	80 or 105

AdBlue tank

AdBlue, nominal capacity [l]	22.5

Tyre pressures

Front-wheel drive			Tyre pressure with full load[16)]	
Engine	Gross Vehicle Weight	Tyre	Front [kPa/bar] (psi)	Rear [kPa/bar] (psi)
M9T	2800	215/65 R16 C	340/3.4 (49)	360/3.6 (52)
	3300	215/65 R16 C	360/3.6 (52)	430/4.3 (62)
	3500	225/65 R16 C	380/3.8 (55)	460/4.6 (68)
	3900	225/65 R16 C	380/3.8 (55)	460/4.6 (68)

16) The spare wheel should be set to the highest applicable pressure shown in the table.

Rear-wheel drive, with single rear wheels			Tyre pressure with full load[16)]	
Engine	Gross Vehicle Weight	Tyre	Front [kPa/bar] (psi)	Rear [kPa/bar] (psi)
M9T	3500	235/65 R16 C	360/3.6 (52)	450/4.5 (65)

16) The spare wheel should be set to the highest applicable pressure shown in the table.

Rear-wheel drive, with twin rear wheels			Tyre pressure with full load[16)]	
Engine	Gross Vehicle Weight	Tyre	Front [kPa/bar] (psi)	Rear [kPa/bar] (psi)
M9T	3500	195/75 R16 C	420/4.2 (61)	420/4.2 (61)
	4500	195/75 R16 C	420/4.2 (61)	420/4.2 (61)

16) The spare wheel should be set to the highest applicable pressure shown in the table.

The tyre pressure information label on the driver's door frame indicates the original equipment tyres and the correspondent tyre pressures. Always inflate tyres to the pressures shown on the label.

Tyre pressure information label ⇨ 182.

Customer information

Customer information **229**
Declaration of conformity 229
Vehicle data recording and privacy **229**
Event data recorders 229
Radio Frequency Identification (RFID) 230

Customer information

Declaration of conformity

This vehicle has systems that transmit and/or receive radio waves subject to Directive 1999/5/EC. These systems are in compliance with the essential requirements and other relevant provisions of Directive 1999/5/EC. Copies of the original Declarations of Conformity can be obtained on our website.

Vehicle data recording and privacy

Event data recorders

Data storage modules in the vehicle

A large number of electronic components of your vehicle contain data storage modules temporarily or permanently storing technical data about the condition of the vehicle, events and errors. In general, this technical information documents the condition of parts, modules, systems or the environment:

- Operating conditions of system components (e.g. filling levels).
- Status messages of the vehicle and its single components (e.g. number of wheel revolutions / rotational speed, deceleration, lateral acceleration).
- Dysfunctions and defects in important system components.

- Vehicle reactions in particular driving situations (e.g. inflation of an airbag, activation of the stability regulation system).
- Environmental conditions (e.g. temperature).

These data are exclusively technical and help identifying and correcting errors as well as optimizing vehicle functions.

Motion profiles indicating travelled routes cannot be created with these data.

If services are used (e.g. repair works, service processes, warranty cases, quality assurance), employees of the service network (manufacturer included) are able to read out this technical information from the event and error data storage modules applying special diagnostic devices. If required, you will receive further information at these workshops. After an error has been corrected, the data are deleted from the error storage module or they are constantly overwritten.

When using the vehicle, situations may occur in which these technical data related to other information (accident report, damages on the vehicle, witness statements etc.) may be associated with a specific person - possibly, with the assistance of an expert.

Additional functions contractually agreed upon with the client (e.g. vehicle location in emergency cases) allow the transmission of particular vehicle data from the vehicle.

Radio Frequency Identification (RFID)

RFID technology is used in some vehicles for functions such as tyre pressure monitoring and ignition system security. It is also used in connection with conveniences such as radio remote controls for door locking/unlocking and starting, and in-vehicle transmitters for garage door openers. RFID technology in Opel vehicles does not use or record personal information or link with any other Opel system containing personal information.

Index

A

Absorptive Glass Mat battery..... 164
Accessories and vehicle modifications 159
Adaptive forward lighting … 101, 170
AdBlue..... 90, 129, 203
Adblue gauge..... 81
AdBlue tank..... 226
Adjustable air vents 116
AGM battery..... 164
Airbag and belt tensioners 87
Airbag deactivation 56, 87
Airbag label..... 52
Airbag system 52
Air conditioning regular operation 118
Air conditioning system 107
Air intake 117
Air suspension 126
Air suspension system..... 196
Air vents..... 116
Antifreeze..... 162
Antilock brake system 138
Antilock brake system (ABS) 89
Anti-theft alarm system 32
Anti-theft bolts..... 189
Anti-theft locking system 32
Anti-theft security lock..... 22
Appearance care..... 198
Armrest 46
Ashtrays 80
Automatic light control 98
Automatic locking..... 22, 26
Autostop..... 122, 123
Auxiliary heater..... 112

B

Battery discharge protection 105
Battery, jump starting..... 194
Belts..... 49
BlueInjection..... 129
Bonnet 160
Brake assist 140
Brake fluid 164, 203
Brakes 138, 164
Brake system 89
Breakdown..... 196
Bulb replacement 168

C

Capacities 226
Cargo management system 70
Car Pass 20
Catalytic converter 128
Central locking system 22
Centre high-mounted brake light 173
Changing tyre and wheel size … 185
Charging system 88
Child locks 26
Child restraint installation locations 59

Child restraints..... 57
Child restraint systems 57
Cigarette lighter 79
Cleaning the vehicle..... 198
Climate control 16
Climate control systems..... 106
Clock 78
Control indicators..... 84
Control of the vehicle 120
Controls..... 76
Convex shape 34
Coolant..... 162
Coolant and antifreeze..... 203
Coolant heater..... 112
Cornering light..... 101, 170
Coupling ball bar..... 155
Cruise control 92, 143
Cupholders 68

D

Danger, Warnings and Cautions ... 4
Dashboard..... 10
Daytime running lights 100
Declaration of conformity..... 229
DEF..... 129
Demisting and defrosting..... 16
Diesel exhaust fluid..... 129
Diesel fuel..... 152
Diesel fuel filter 166
Diesel fuel system bleeding 167
Diesel particle filter 128
Door locks..... 22
Door open 92
Doors..... 27
DPF (diesel particle filter)..... 128
Driver assistance systems..... 143
Driver Information Centre..... 93
Driving characteristics and towing tips 154
Driving economically..... 120
Driving hints..... 120

E

ECO mode..... 120
ecoScoring..... 95
Electric adjustment 34
Electrical system..... 175
Electronic climate control system 108
Electronic driving programmes .. 137
Electronic Stability Program 90, 142, 156
Electronic Stability Program off ... 90
Emergency exit..... 37, 39
End-of-life vehicle recovery 160
Engine compartment fuse box ... 177
Engine coolant 162
Engine coolant temperature 90
Engine coolant temperature gauge 82
Engine data 208
Engine exhaust 128
Engine identification..... 206
Engine oil 161, 203, 207, 226
Engine oil additives..... 203
Engine oil level monitor..... 82
Engine oil pressure 91
Engine oil viscosity grades..... 203
Enhanced Traction function 141, 142
Event data recorders..... 229
Exhaust gases..... 128
Exit lighting 104
Exterior care 198
Exterior light 92
Exterior lighting 14, 98
Exterior mirrors..... 34

F

Fault 138
Fire extinguisher..... 72
First aid..... 72
First aid kit 72
Fixed air vents 117
Fog light 92
Fog lights..... 101, 170
Folding mirrors 35
Front airbag system 55
Front courtesy light..... 102
Front fog lights..... 98, 101
Front reading light..... 103
Front seats..... 41

Front storage..... 68
Front turn signal lights 171
Fuel consumption - CO_2-
Emissions 154
Fuel economy rating (ecoScoring) 95
Fuel for diesel engines 152
Fuel gauge 81
Fuel tank..... 226
Fuse box..... 177, 178
Fuses 175

G
Gauges..... 80
General information 154
Glass panel 39
Glovebox 68
Glovebox cooler 117
Ground clearance..... 126

H
Hand brake - see Parking brake. 139
Hazard warning flashers 101
Headlight flash 100
Headlight range adjustment 100
Headlights..... 98, 99, 168
Headlights when driving abroad 100
Head restraint adjustment 8
Head restraints 40
Heated exterior mirrors..... 16
Heated mirrors 35
Heated rear window..... 16, 38
Heating 46
Heating and ventilation system . 106
High beam 92, 99
High beam assist..... 92, 99
Hill start assist 140
Horn 15, 76
Hub cap hook..... 180

I
Identification plate 206
Idle speed control..... 122
Ignition switch positions 121
Immobiliser 33
Indicators..... 80
Info display..... 93
Information displays..... 93
Initial drive information..... 6
Instrument cluster 80
Instrument panel fuse box 177
Instrument panel illumination 175
Instrument panel overview 10
Instrument panel storage..... 67
Interior care 200
Interior lighting..... 102
Interior lights 102, 174
Interior mirrors..... 36
Interruption of power supply 138
Introduction 3
ISOFIX child restraint systems 66

J
Jack..... 180
Journey record..... 95
Jump starting 194

K
Keys 20
Keys, locks..... 20

L
Lane departure warning..... 89, 151
Lashing eyes 70
Light covers, misted..... 102
Lighting..... 98
Lighting features..... 104
Light switch 98
Load compartment..... 22
Load compartment fuse box 178
Load compartment lighting..... 103
Loading information 73
Low fuel 91

M
Malfunction indicator light 88
Manual adjustment 34
Manual anti-dazzle 36
Manual door locks..... 22
Manual mode 136
Manual transmission..... 17, 134
Manual transmission
automated..... 17, 135

Manual windows 36
Messages..... 93
Mirror adjustment 8
Mirrors..... 34, 36
Misted light covers 102

N

New vehicle running-in 121
Number plate light 174

O

Object detection systems..... 147
Odometer 81
Oil..... 161
Oil, engine..... 203, 207
Oil level..... 82
Oil pressure..... 91
Outside temperature 78
Overcab storage 69
Overhead console 68
Overrun cut-off 123

P

Parking 19, 125
Parking assist 147
Parking brake 139
Parking ticket holder..... 38
Particulate filter..... 128
Performing work 160
Pollen filter 117
Power door locks..... 25
Power outlets 79
Power side step..... 27
Power sliding door..... 27
Power steering fluid..... 163
Power take-off..... 156
Power windows 36
Preheating 90, 122
Puncture..... 186, 189

R

Radio Frequency Identification (RFID)..... 230
Radio remote control 21
Rain sensor..... 77
Reading lights 103
Rear air conditioning system 111
Rear bench seat storage..... 69
Rear courtesy light..... 102
Rear doors 30
Rear fog light 92
Rear fog lights..... 98, 102
Rear heating system 110
Rear reading light..... 103
Rear seats..... 47
Rear storage..... 69
Rear view camera 148
Rear windows 37
Recommended fluids and lubricants 203, 207
Refuelling 153
Remote control..... 21
Retractable parking brake..... 139
Reversing lights 102
Ride control systems..... 141
Ride height..... 126
Roof..... 39
Roof load..... 73
Roof rack 73

S

Safety belts..... 49
Safety net 72
Seat adjustment 7, 42
Seat belt 8
Seat belt reminder 87
Seat belts 49
Seat heating..... 46
Seat position 41
Selective catalytic reduction..... 129
Selector lever 135
Service 118, 201
Service display 83, 88
Service information 201
Service vehicle soon 88
Side airbag system 55
Sidelights..... 98
Side turn signal lights 172
Side windows..... 37
Sliding door 27
Spare wheel 191

Speed limiter..... 80, 146
Speedometer 80
Starting and operating..... 121
Starting off 18
Starting the engine..... 18, 122, 135
Steering..... 120
Steering column controls..... 76
Steering wheel adjustment 9, 76
Steering wheel controls 76
Stop engine..... 89
Stop-start system..... 18, 91, 123
Storage..... 67
Storage compartments..... 67
Sun visors 38
Suspension height..... 126
Suspension seat..... 42
Symbols 4

T

Tachograph..... 92, 97
Tachometer 81
Tail lights 171
Technical data..... 208
Three-point seat belt 50
Tools 180
Top-tether fastening eyes 66
Tow bar..... 154
Towing..... 154
Towing another vehicle 197
Towing a trailer..... 155
Towing equipment 155
Towing eye..... 196
Towing the vehicle 196
Traction Control system 141
Trailer coupling..... 154
Trailer stability assist 156
Trailer towing 155
Transmission 17
Transmission display 83, 135
Tread depth 185
Trip computer 95
Trip odometer 81
Turbo engine warm-up..... 122
Turn and lane-change signals ... 101
Turn signal 87
Tyre chains 186
Tyre changing..... 189
Tyre designations 181
Tyre pressure 182
Tyre pressure monitoring
system..... 90, 183
Tyre pressures 227
Tyre repair kit 186
Tyres 181
Tyres and wheel size, changing. 185

U

Ultrasonic parking assist..... 147
Underseat storage 69
Upholstery..... 200
Upshift..... 89
Using this manual 3

V

Vehicle battery 164
Vehicle checks..... 160
Vehicle data..... 207
Vehicle data recording and
privacy..... 229
Vehicle dimensions 217
Vehicle Identification Number 205
Vehicle jack..... 180
Vehicle messages 93
Vehicle security..... 32
Vehicle specific data 3
Vehicle storage..... 159
Vehicle tools..... 180
Vehicle unlocking 6
Vehicle weight 210
Ventilation..... 106

W

Warning chimes 94
Warning lights..... 80
Warning triangle 72
Washer and wiper systems 16
Washer fluid 164
Washing the vehicle..... 198
Wheel changing 189
Wheel covers 185
Wheels and tyres 181

Wheel wrench..... 180
Wide view mirror..... 36, 38
Windows..... 36
Windscreen..... 36
Windscreen wiper/washer 77
Winter tyres 181
Wiper blade replacement 167

www.opel.com

Copyright by ADAM OPEL AG, Rüsselsheim, Germany.

The information contained in this publication is effective as of the date indicated below. Adam Opel AG reserves the right to make changes to the technical specifications, features and design of the vehicles relative to the information in this publication as well as changes to the publication itself.

Edition: February 2016, ADAM OPEL AG, Rüsselsheim.

Printed on chlorine-free bleached paper.

KTA-2683/10-en 02/2016