Table of Contents

E65/66 Model Update

Subject **Page**

Introduction **5**
Technical Data 6
Dimensions and Weight 6
Performance Data 6

New Engine Variant **7**
Air Intake Duct 8
Differentiated Intake System (DISA) 9
Operation of Dual Stage DISA System 10
Crankshaft 11
Oil Pump 11
Oil Dipstick 11
Inlet and Exhaust Valves 11
Spark Plugs 11
Digital Motor Electronics DME 11
Lambda Oxygen Sensor 12
Hot-film Air-mass Meter (HFM) 12

Transmission **13**

Chassis and Suspension **14**

Exterior Design **15**
Front End 16
Rear End 18
Rear Lights 18
Bumper Trim 18
Trunk Lid 18

Interior Design **20**
Controller 21
Steering Wheel 21
IHKA Controls and Light Switch Center 22

Vehicle Lighting **23**
Control Units 23
Light Module 23
Power Module 23

cardiagn.com

Initial Print Date: 03/05 Revision Date: 04/05

Subject **Page**

SMC 23
Bi-Xenon Control Unit 26
Bi-Xenon Headlights 26
Headlight Washer System 28
Front Fog Light 28
Tail Lamp Assemblies 29
Tail Lights 30
Brake Light 30
Brake Force Display 31
Rear Side Marker Light 31

Bus Overview 32
Changes in the E65/E66 Bus Diagram in 03/2005 32
Adaptive Directional Headlights and Light Module 32
MOST 32
PT-CAN 32
Changes in the E65/E66 Bus Diagram Since 03/2004 32
K-CAN S 32
MOST 32
byteflight 32
PT-CAN 32

E65/E66MU Energy Management 34
New Deactivation Strategy 35
Deactivation strategy in event of excessive closed-circuit current . 35
Deactivation strategy in event of too many wake-up operations . . . 35
Normal Sleep Procedure 36
Detection of a Closed-Circuit Current Violation 36
Sleep Behavior with Closed-Circuit Current Violation 38
Measures for Maintaining Battery Starting Capability (SoC) 39
Electric Loads/Consumers in Stationary Mode 39
Disconnection of Terminal 30 39
Shortening of Run-On Time 40

Display and Control Elements (iDrive) 41
Controller 41
Central Display 41
Entertainment Submenu 42
Air Conditioning Submenu 43
Air Distribution Function 43
Engine Oil Level Display 44

Entertainment 45
Audio System Controller (ASK) 45
CD Changer 46

cardiagn.com

Subject **Page**

What is MP3? 46
What is WMA? 46
Operation, Display, and Playback 46

Comfort Access 47
System Overview 47
Passive Entry 48
Unlocking 48
Passive Go 48
Starting 48
Passive Exit 49
Locking 49
Special Comfort Access Functions 49
ID Transmitter Remains in Vehicle 49
ID Transmitter Remains in Trunk 49
Engine Start Disable 49
Starting Engine without ID Transmitter 50
Check Control Message, Terminal 15 50
Unintentional Wake-up Function 50
Locking with Engine Running 50
System Components 51
Comfort Access Module (CA) 53
Car Access Module (CAS) 55
Electronic Outer Door Handle (TAGE) 55
Electronic Unlock Motor 56
ID Transmitter 57
Remote Control Receiver (FBD) 57
Antennas 57
Footwell Antenna Location 58
Rear Parcel Shelf Antenna Location 59
Trunk Antenna Location 60
Bumper Antenna Location 60
ID Transmitter/Remote Control 61
Miscellaneous Information 62
Car Wash 62
CBS Data 62
Door-Selective Unlocking 62
Missing ID Transmitter 62
Component Replacement 63
Diagnosis 63
Comfort Access Fault Memory 63
Fault Memory, Electronic Outer Door-Handle 63
Initialization 63
Check Control Messages 64

cardiagn.com

E65/66 Model Update

Model: 750i, 750Li, 760i and 760Li

Production: From March 2005

OBJECTIVES

After completion of this module you will be able to:

- Know the changes to the E65/66 vehicle as of 3/2005
- Know the differences made to the N62 engine
- Familiarize yourself with the changes in the bus system
- Familiarize yourself with the new menu layout in the CID

cardiagn.com

Introduction

The Latest generation seven series has been redesigned starting March 2005 production. The official launch date of the 2006 model year 7 series if April 22, 2005. The redesign focuses on these five major changes:

- More powerful engines
- Adapted chassis and suspension
- Redesigned exterior body
- Optimized energy management
- Improved iDrive operation

cardiagn.com

Technical Data

Dimensions and Weight

		E65 from 3/2005	E65 (previous)
Length	mm	5039 (+10)	5029
Width	mm	1902	1902
Height	mm	1491 (+1)	1492
Wheelbase	mm	2990	2990
Toe, Front	mm	1578	1578
Toe, Rear	mm	1596	1582
Trunk Capacity	liters cubic feet	500 17.65	500 17.65
Unladen Weight	kilograms pounds	1805 -2105 3979 - 4640	1802 - 2115 3972 - 4662
Payload	kilograms pounds	540 - 580 1190 - 1278	505 - 580 1113 - 1278
Standard Tires		245/55R17 245/50R18	245/55R17 245/50R18

Performance Data

		750i N62B50TU	670i N73B60
Cylinders/Valves	per cylinder	V8 / 4	V12 / 4
Displacement	ccm cu.in.	4798 292.8	5972 364
Power Output @ rpm	bhp@rpm	367@6300	445@6000
Max. Torque @ rpm	n/m@rpm lb/ft@rpm	490@3400 361@3400	600@3950 442@3950
0-100 km/h (0-62 mph)	seconds	5.9	5.6
V Max.	km/hr mi/hr	250 155	250 155
Fuel Tank Capacity	liters gallons	88 23.25	88 23.25

cardiagn.com

New Engine Variant

The model redesign of the E65/E66 Series is accompanied by a comprehensive revision of the N62 engine. The N73 (twelve cylinder) engine remains unchanged.

The power output and torque of the engine has been significantly increased.

For 2006 model year, a redesigned 4.8 liter Valvetronic engine replaces the 4.4 liter Valvetronic. This significant increase in displacement is the reason the vehicle is now badged 750i/Li instead of 745i/Li.

The following Chart shows the difference in horsepower and torque between the two engines:

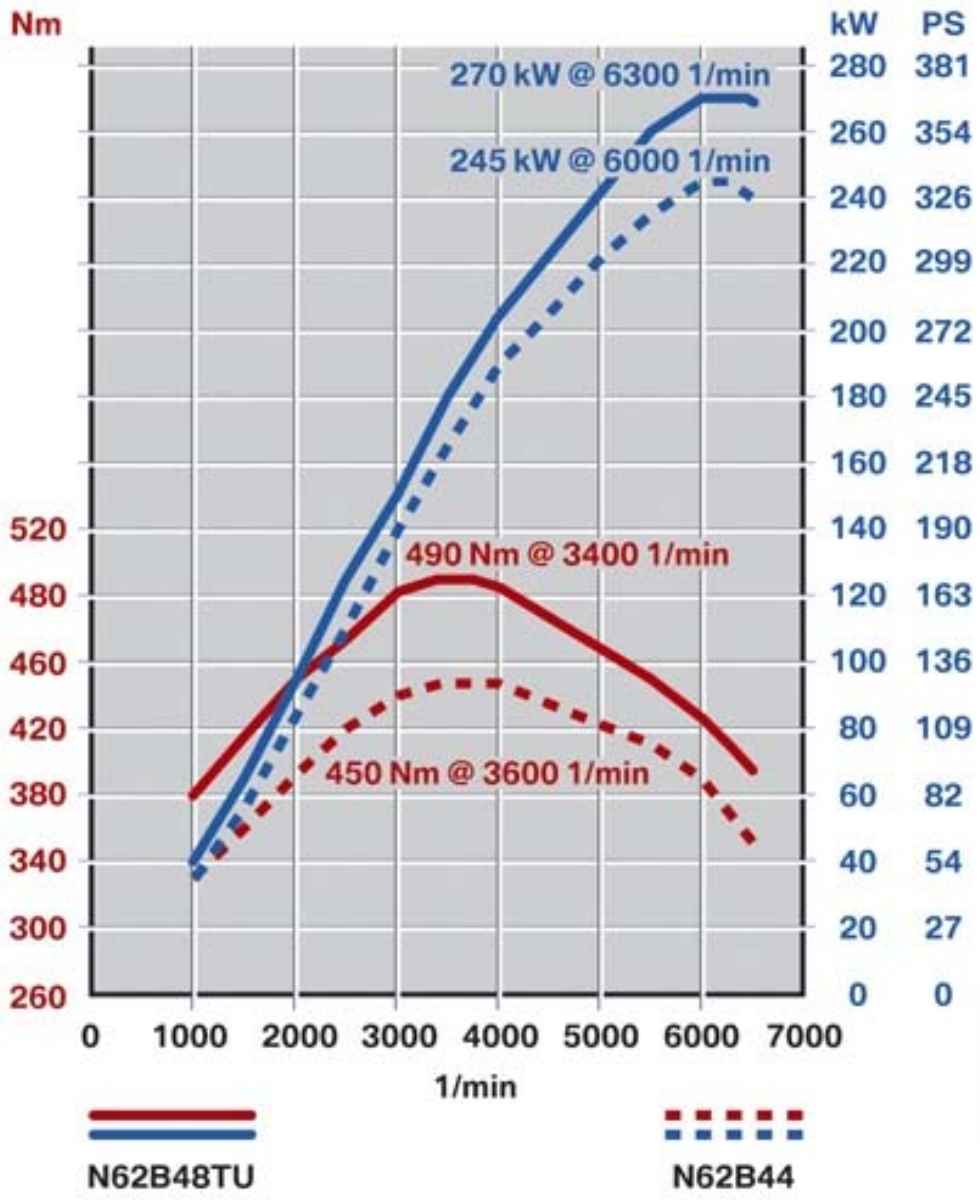

cardiagn.com

The major changes to the engine are:

- Air intake duct
- Differentiated intake system (DISA)
- Crankshaft
- Oil dipstick
- Oil pump
- Inlet and exhaust valves
- Spark plugs
- DME 9.2.2

Air Intake Duct

The N62B48TU engine has a larger, two-channel air intake duct used for air intake. The use of two air boxes is solely for keeping the hood line low (aesthetics).

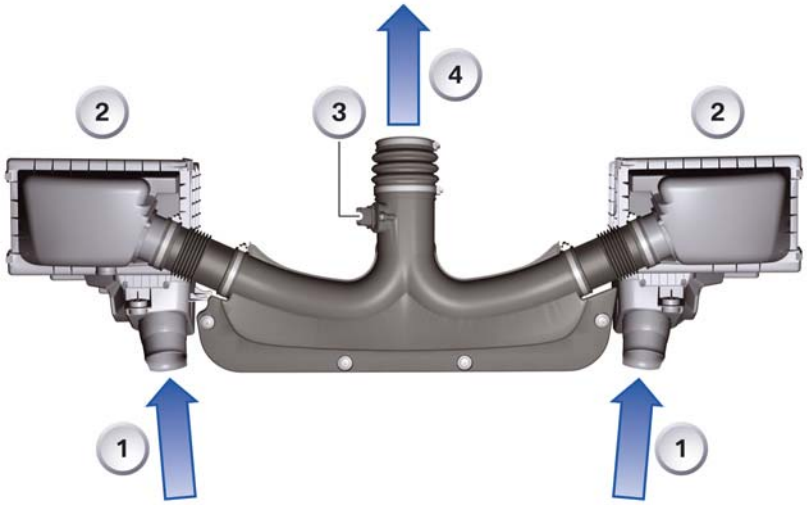

N62B48TU Air Intake Duct

Index	Explanation	Index	Explanation
1	Raw air intake	3	Hot-film air-mass meter (HFM)
2	Intake silencer	4	Clean air flow to intake system

cardiagn.com

Differentiated Intake System (DISA)

The previous fully variable intake system (DISA) is no longer used in the N62B48TU engine. A two-stage intake system (DISA) is used instead.

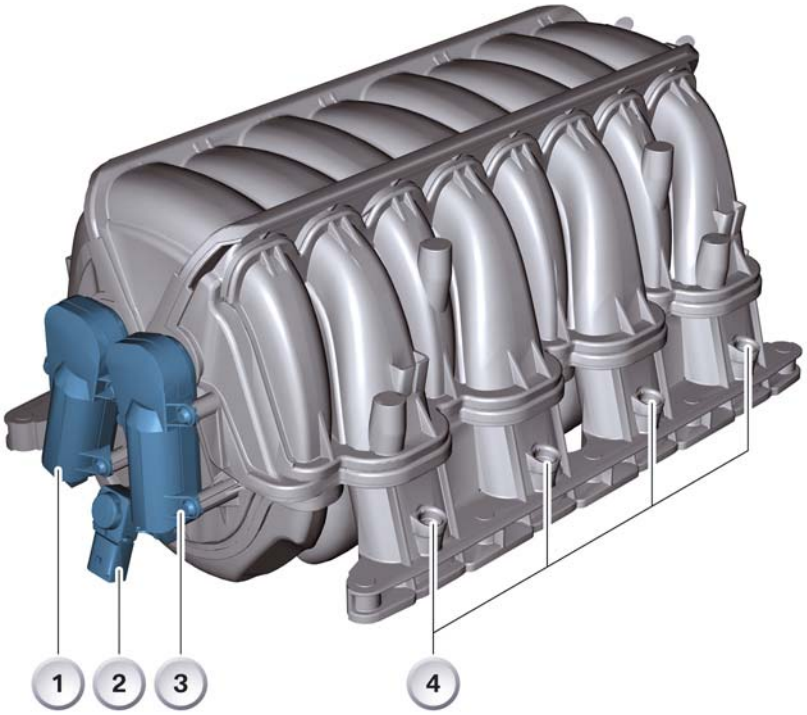

Differentiated Intake System (DISA)

Index	Explanation
1	Servomotor, cylinder bank 1
2	Differential pressure sensor
3	Servomotor, cylinder bank 2
4	Bores for fuel injectors

cardiagn.com

Operation of Dual Stage DISA System

In the intake system a sliding sleeve (3) is located at the intake manifold for each cylinder. The position of the sleeves determines whether the intake passage is long (1) or short (2).

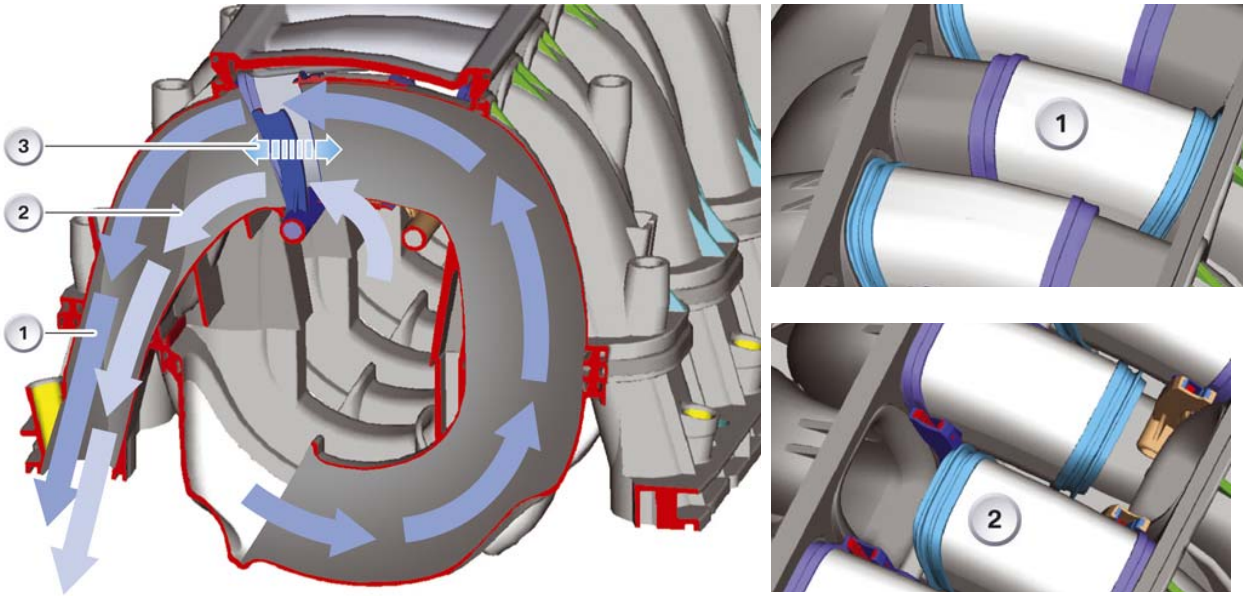

Index	Explanation	Index	Explanation
1	Long intake passage	3	Direction of movement of sliding sleeves
2	Short intake passage		

At idle a long intake passage is set (torque setting).

From 4700 rpm (N62B48TU) the sleeves are pushed back and a short intake passage is thereby set (power setting). When there is no flow, the sliding sleeves remain in their respective position.

Varying the intake passages controls the pressure wave in the intake manifold in such a way as to produce a boost effect in the high rpm range.

The sliding sleeves are driven by a servomotor assigned to each cylinder bank. The two servomotors together with the differential pressure sensor form a single component.

The 12V servomotors are actuated by the DME via a PWM signal. While the sliding sleeves are open (power setting), the servomotors are actuated with a 5 % PWM signal in order to hold the sleeves in their open position. The servomotors do not have position feedback. The sleeves can be inspected visually through the throttle valve opening. The sleeves are opened and closed once when the ignition is turned on. This prevents the sleeves from seizing during extended operation in the torque setting.

The bores for the fuel injectors and the connections for crankcase and tank ventilation are located on the intake system (DISA). The intake system is made of glass-fiber reinforced plastic.

cardiagn.com

Crankshaft

The N62B48TU engine has a steel crankshaft. To reduce power loss due to oil churning in the crankcase, the crankpin width has been reduced from 42 mm to 36 mm.

Oil Pump

The geometry of the oil pump is vehicle specific adapted. Oil churning losses in the crankcase are further reduced by the modified design of the oil deflector.

Oil Dipstick

The E65 Facelift model series is equipped with an electronic oil level display. The dipstick has a modified handle in black.

Inlet and Exhaust Valves

The stem diameter has been reduced from 6 mm to 5 mm to reduce moving masses.

Spark Plugs

The previous surface-gap spark plugs with 2 ground electrodes have been replaced by spark plugs with the spark position brought forward and a hook electrode. This enables better ignition of the fuel/air mixture. In the new spark plugs the center electrode is made of platinum (replacement interval: every 100,000 km).

Digital Motor Electronics DME

The N62TU engine is equipped with the Digital Motor Electronics (DME) ME9.2.2. The functions of the ME 9.2.2 are the same as for the previous ME 9.2 of the N62 engine with the following changes:

- New processor
- Lambda oxygen sensor LSU 4.9
- Hot-film air-mass meter HFM 6
- Software for electronic oil level measurement.

cardiagn.com

Lambda Oxygen Sensor

An LSU 4.9 oxygen sensor is used as the control sensor for each cylinder bank. The LSU 4.9 oxygen sensor reaches operational readiness twice as fast (10 sec.) as the LSU4.2. This rapid starting capability is made possible by the use of a smaller ceramic element. The outer dimensions of the oxygen sensor remain unchanged.

The previous opening for the supply of ambient air (reference air measurement) has been dispensed with. The new sensor differs from the LSU 4.2 in that a porous layer permeable by air is used instead of a reference air channel. The function stays the same. The ambient air is directed to the measuring element via the connecting cable.

Hot-film Air-mass Meter (HFM)

The HFM 6.4 is used in the N62TU engine. The sensor signal is already digitized in the HFM 6.4. The digitized signal is sent to the DME.

cardiagn.com

Transmission

The GA6HP26Z automatic transmissions has been optimized for all the model series in the following respects:

- New linings on the shift clutches
- Use of new fine filters in the hydraulic system
- Newly designed converter connection

The new designation for the transmission is GA6HP28Z.

The newly designed transmission control unit GS 19.11 is used for the automatic transmissions. Compared to its predecessor (GS 19.04) it offers the following advantages:

- New processor with higher computing capacity and flash memory expanded from 512 KB to 1 MB
- Designed to withstand higher temperatures
- Electromagnetic compatibility considerably improved
- Reserve for further functions
- Optimization of shift quality, shifting time and hysteresis tuning.

The control unit is located on the mechatronics module in the transmission.
The housing and the pin assignments have not been changed.

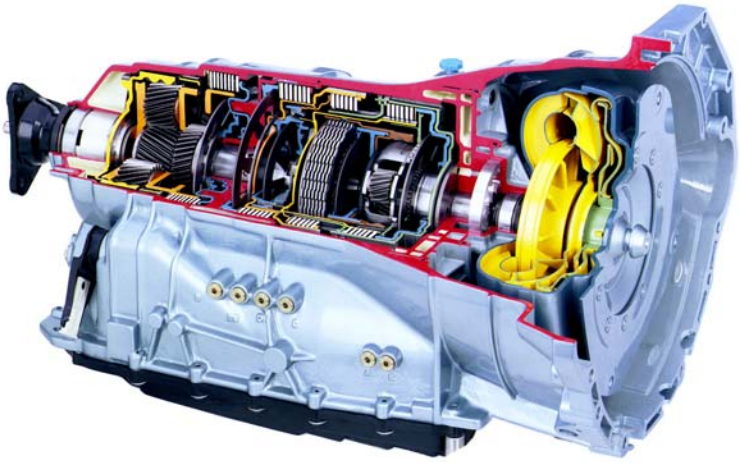

GA6HP28Z

cardiagn.com

Chassis and Suspension

There continue to be three different suspension variants as before: Newly tuned standard suspension (air suspension standard on the long versions), Sport suspension, Electronic Damper Control

Further suspension modifications include:

- Widening of the total toe on the rear axle by 14 mm
- Redesigned cruise control (ACC II)
- 750i has 17" high performance brake on the front axle
- New steering wheel design and wheel designs

	E65 750i	E66 750Li	E65 760i	E66 760Li
Standard				
Styling Number	175	175	149	89
Size	8 x 18”	8 x 18”	9 x 20”front 10 x 20”rear	9 x 19”front 10 x 19”rear
Tire	245/50R18 All-season or All-season run-flat (no cost)	245/50R18 All-season or All-season run-flat (no cost)	245/40R20 front 275/35R20 rear Performance	245/40R20 front 275/35R20 rear Performance
Sport Package				
Styling Number	95	95		
Size	9 x 19”front 10 x 19”rear	9 x 19”front 10 x 19”rear		
Tire	245/45R19 front 275/40R19 rear Performance	245/45R19 front 275/40R19 rear Performance		
Optional				
Styling Number	95	95		91
Size	9 x 19”front 10 x 19”rear	9 x 19”front 10 x 19”rear		8 x 18”
Tire	245/45R19 front 275/40R19 rear Performance	245/45R19 front 275/40R19 rear Performance		245/50R18 All-season

cardiagn.com

Exterior Design

The current BMW 7 Series has been on the market since Autumn 2001. During this period the E65 - together with the E66 long version - has surpassed even the successful predecessor model E38 in terms of sales figures. The responsibility for this sales success lies predominantly with the US market.

The body has been redesigned all round. The vehicle boasts a new:

- Hood
- Trunk lid
- Front fenders
- Front light assembly
- Rear light assembly
- Kidney grills
- Accentuated side skirt
- Front bumper cover
- Rear Bumper cover
- Wheel well covers
- Fog Lights

Changes to the E65/66 Body

cardiagn.com

Front End

At the front end the headlights, the front grill, the bumper trim, the hood and the front fenders have been changed.

The light rings around the high-beam headlights are now completely enclosed. Bi-xenon active (AHL controlled) headlights are included as standard.

The fog lights are bigger and are accommodated in separate openings.

The air intake in the bumper trim is equipped with three grills. The openings are adapted for the brakes, new engine, and ACC II (option).

The front grille is now wider (14 chrome plated vertical bars per kidney) and their outer contours run almost parallel to the headlight contours.

The front fenders have been modified in the area of the headlights. Due to the new headlight shape and the new front grill, the hood has also been redesigned. The hood and fenders are still made of aluminium.

The wheel arch trims, bumper trim carriers and bonnet insulation trim have also been redesigned.

E65/E66 Front View

cardiagn.com

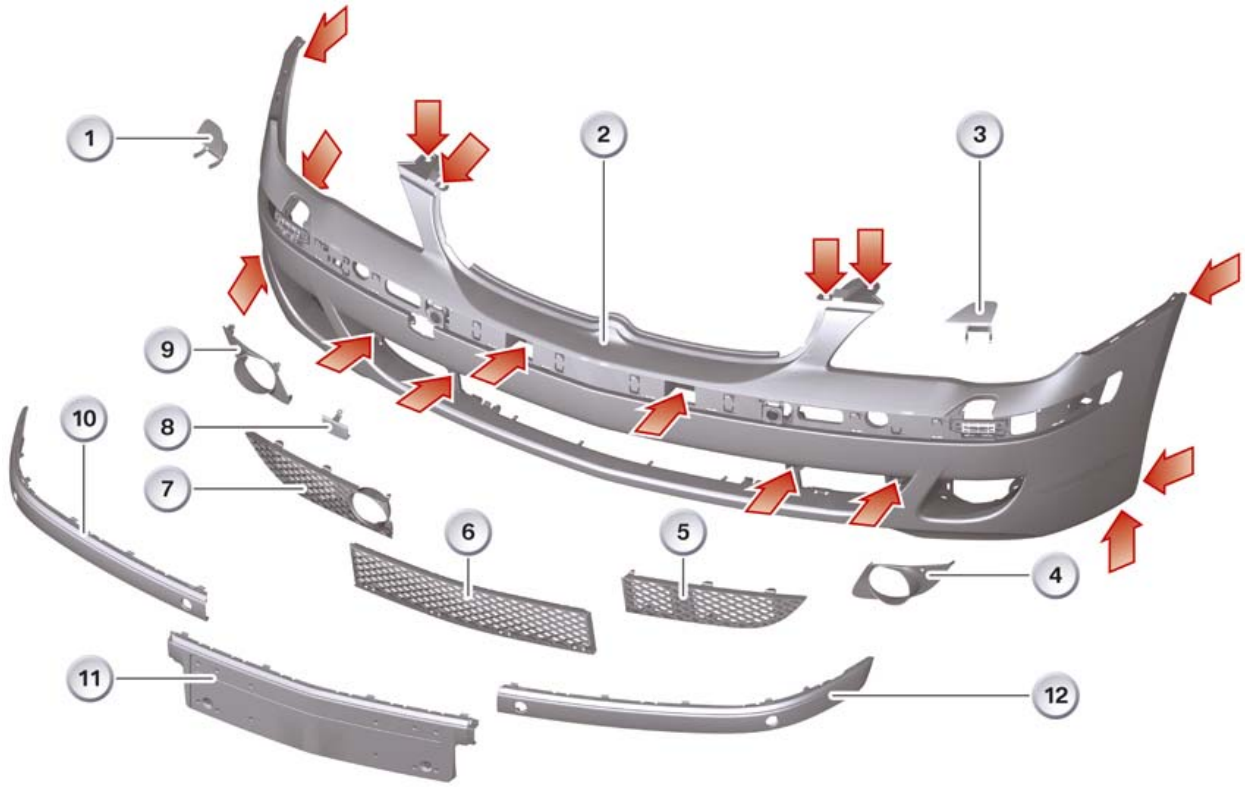

Attachment Parts for Front Bumper Trim

Index	Explanation
1	Right headlight washer system cover
2	Bumper trim
3	Left headlight washer system cover
4	Left fog light trim
5	Left grille
6	Middle grille
7	Right grille
8	Cover for bolted towing lug
9	Right fog light trim
10	Front right rubbing strip with chrome strip and locator for two PDC sensors
11	Number plate base plate
12	Front left rubbing strip with chrome strip and locator for two PDC sensors

cardiagn.com

Rear End

Rear Lights

The newly designed rear lights with fibre-optic (wave guide) technology tail lights give the car an exclusive night-time design with outstanding visibility.

The outer contours of the rear lights in the side panels have stayed the same. The rear quarter panels have not been changed.

Bumper Trim

The bumper trim has also been redesigned. The side rubbing strips are slightly shorter and no longer stretch to the wheel well opening. The exhaust tailpipes are covered by the bumper trim.

Trunk Lid

The design features of the trunk lid have also been altered.

The three-part light surround has been replaced by two larger-sized rear lights which merge almost seamlessly into the rear lights in the quarter panels.

Other new features next to the BMW badge with chrome frame are the country-specific number plate trim and the long chrome strip which visually connects the reversing lights to each other. In addition, the new number plate lights and the new trunk lid lock are integrated in the trunk lid.

The trunk lid trim panel is adapted to the new trunk lid. The bulbs in the rear fog/reversing lights can be easily replaced by unclipping the corresponding trim panels. The trunk lid lock is located to the right of the number plate light and is not longer directly visible.

E65/E66 Rear View

cardiagn.com

All three rubbing strips and the impact absorber can be removed from the outside.

The points at which the bumper trim is connected to the body have not changed (red arrows on picture below).

Structural changes to the front and rear bumper trims have increased the length of the car by 10 mm. Thus the new length is 5039 mm for the E65 and 5179 mm for the E66.

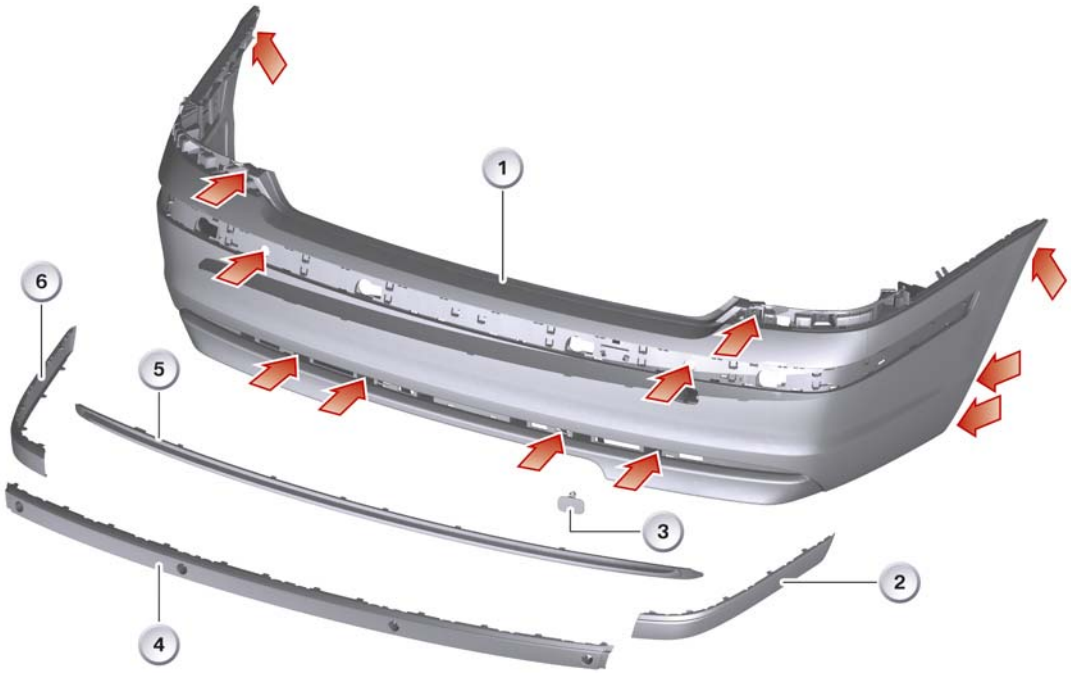

Attachment Parts for Rear Bumper Trim

Index	Explanation
1	Rear bumper trim
2	Rear right rubbing strip with
3	Cover for bolted towing lug
4	Rear middle rubbing strip with chrome strip and locators for four PDC sensors
5	Impact absorber
6	Rear right rubbing strip with chrome strip

cardiagn.com

Interior Design

The interior is now even more appealing and of higher-quality thanks to the use of new materials, colors and surfaces.

For example, all the trims and the fresh-air grills which are in the immediate field of vision of the occupants are coated with superior quality paint (titanium instead of dark silver).

The headliner trims are coated with structural soft paint in the corresponding headliner color (beige, black or stone-grey).

The decorative trims now also come in new, superior-quality wood designs. "American walnut" replaces "black cherry" in the basic equipment specification. The fine wood design light or dark "variegated ash" is available as an option.

Many individual parts such as e.g. locking knobs, inside door handles, frames of drinks holders etc. are modeled in pearl-effect chrome.

Interior View of Facelift Vehicle

cardiagn.com

Controller

The increase in quality can also be seen from the example of the controller. The controller has a new shape and is made from a new material. It is designed in a so-called mono-sandwich with leather insert. The leather insert has a practical as well as a visual benefit for the customer in that it is equally pleasant to touch when hot or cold. The controller trim has a new shiny finish thanks to the titanium paint.

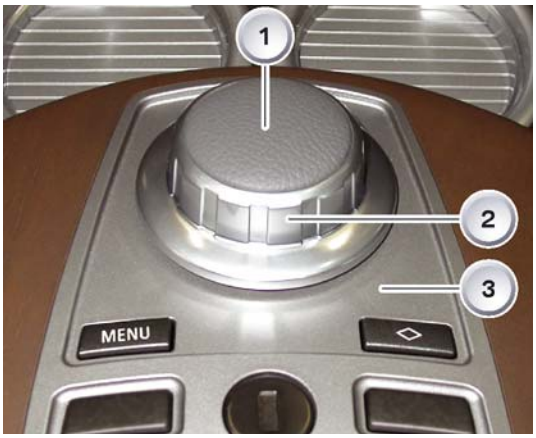

Index	Explanation
1	Leather insert
2	Controller in pearl-effect chrome
3	Titanium painted controller trim

Steering Wheel

The design of the steering wheel has also been changed. The airbag impact pad now has slightly curved edges at the top and bottom. The steering wheel comes in the same color as the instrument panel trim.

Redesigned Steering Wheel

Original Steering Wheel

cardiagn.com

IHKA Controls and Light Switch Center

The IHKA controls and the light switch center have been visually enhanced. The rotary knobs are modeled in pearl-effect chrome.

The buttons or the button groups and the rotary knobs are set off by an “island type” or “floating” design. The corresponding trims are coated with high-quality paint (titanium).

The OFF button and defrost button have changed places.

Controls for IHKA

Index	Explanation
1	Switch OFF button (new position)
2	Left interior air supply controller and defrost button (new position)

cardiagn.com

Vehicle Lighting

The following system components are installed for the exterior lighting:

- Control units
  - Light module
  - Power module
  - Stepping motor controller
  - Control unit for bi-xenon headlight
- Headlights (with parking lights/low beam/high beam and direction indicators)
- Fog lights
- Front additional direction indicators
- Rear light cluster
  - Tail light
  - Brake light
  - Rear fog light
  - Reverse light
  - Direction indicator
  - Third brake light
- Lights operating unit
- Steering column switch cluster
  - Steering column switch, high beam/headlight flasher
  - Steering column switch, direction indicator lights
- Sensors.

Control Units

Light Module

The LM light module contains the complete functions for controlling the exterior lights.

Cars with adaptive directional headlights no longer have a separate AHL control unit. The functions of the AHL control unit are integrated in the LM. The housing and the plug coding of the LM are not changed.

The LM receives the information from the PT-CAN (yaw rate, road speed and steering angle) for controlling the adaptive directional headlights via its own PT-CAN connection.

Power Module

The power module provides the power for the light module (special loads/consumers terminal).

SMC

The stepping motor controller is located on the side on the bi-xenon headlight.

The stepped motor controller controls and monitors the movement of the stepping motors of the adaptive directional headlight and headlight vertical aim control.

cardiagn.com

Lighting System Circuit Diagram

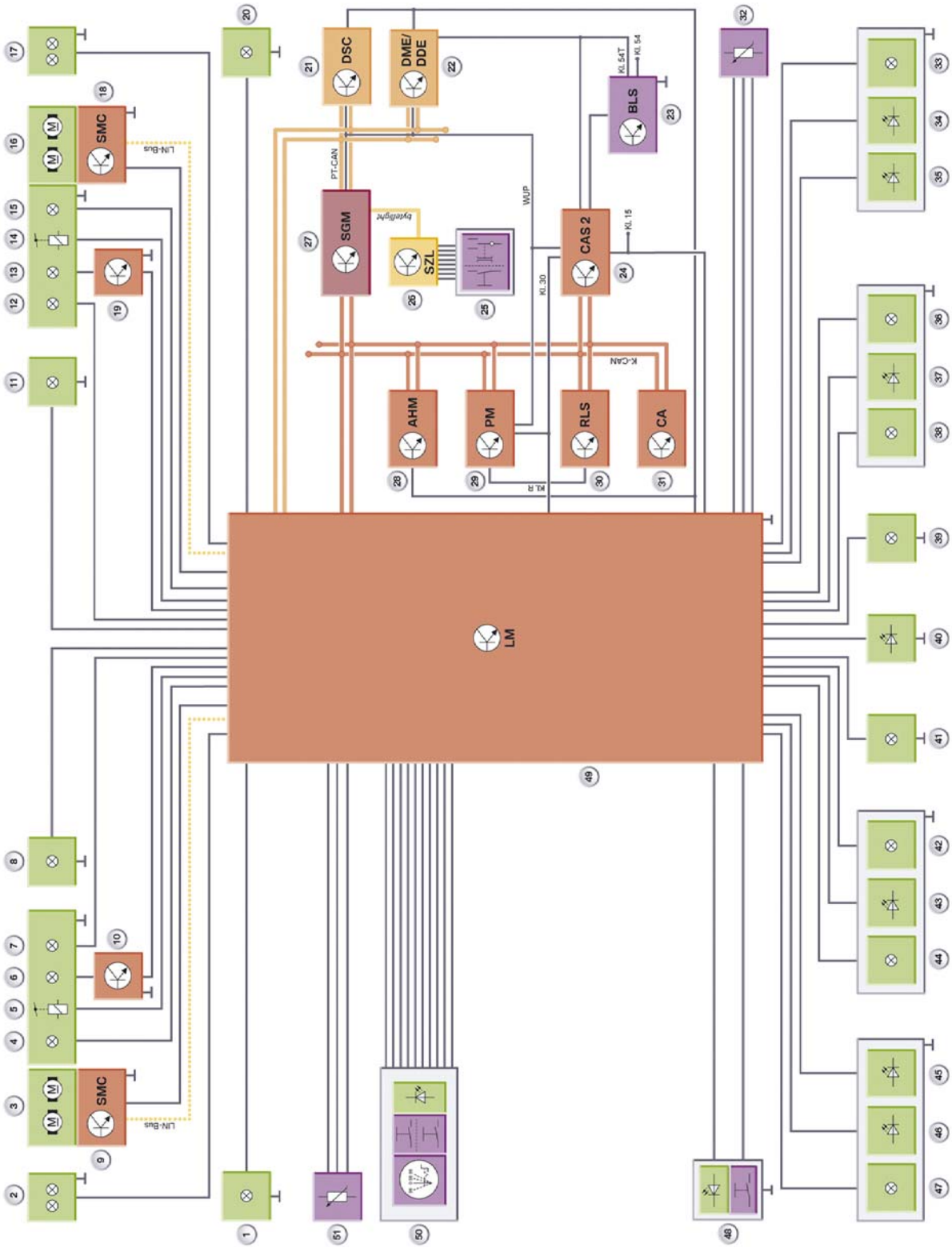

cardiagn.com

Legend for System Circuit Diagram

Index	Explanation	Index	Explanation
1	Additional direction indicator, left	27	Safety and gateway module SGM
2	Direction indicator, front left	28	Trailer module AHM
3	Stepping motors	29	Power module PM
4	Parking light, left	30	Rain/light sensor RLS
5	High beam shutter, left	31	Comfort Access CA
6	Bi-xenon high beam/low beam headlight, left	32	Ride-height sensor, rear
7	High beam light, left	33	Direction indicator, rear right
8	Front fog light, left	34	Tail light, right 1
9	Stepping motor controller SMC for adaptive directional headlight, left	35	Brake light, right
10	Control unit for bi-xenon high beam headlight, left	36	Rear fog light, right/brake force display, right
11	Front fog light, right	37	Tail light, right 2
12	High beam light, right	38	Reversing light, right
13	Bi-xenon high beam/low beam headlight, right	39	License plate light, right
14	High beam shutter, right	40	Raised brake light
15	Parking light, right	41	Number plate light, left
16	Stepping motors	42	Reversing light, left
17	Direction indicator, front right	43	Tail light, left 2
18	Stepping motor controller SMC for adaptive directional headlight, right	44	Rear fog light, left/brake force display, left
19	Control unit for bi-xenon headlight, left	45	Brake light, left
20	Additional direction indicator, right	46	Tail light, left 1
21	Dynamic Stability Control DSC	47	Direction indicator, rear left
22	Digital Motor Electronics DME	48	Hazard warning switch
23	Brake light switch BLS	49	Light module LM
24	Car access system 2 (CAS 2)	50	Light switch
25	Steering column switch, high beam/direction indicator lights	51	Ride-height sensor, front
26	Steering column switch cluster (SZL)		

cardiagn.com

Bi-Xenon Control Unit

The bi-xenon control unit is mounted on the bi-xenon headlight. It provides the voltage supply and ignition voltage for the bi-xenon lamp.

Bi-Xenon Headlights

The E65/E66 has new headlights. The headlights have a new contour line and a completely new internal design. Front direction indicators are only available in white and the only variant available for the US is bi-xenon with adaptive directional headlight control.

The light for the parking light rings is generated by a common bulb and directed via the fibre optics to the parking light rings.

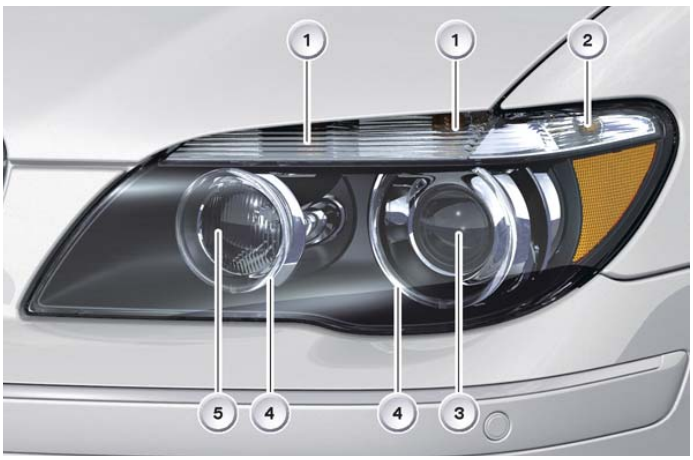

Index	Explanation
1	Front direction indicator
2	Parking light rings
3	Bi-xenon high beam/low beam light
4	High beam light

Headlight Mounting Screw Position

cardiagn.com

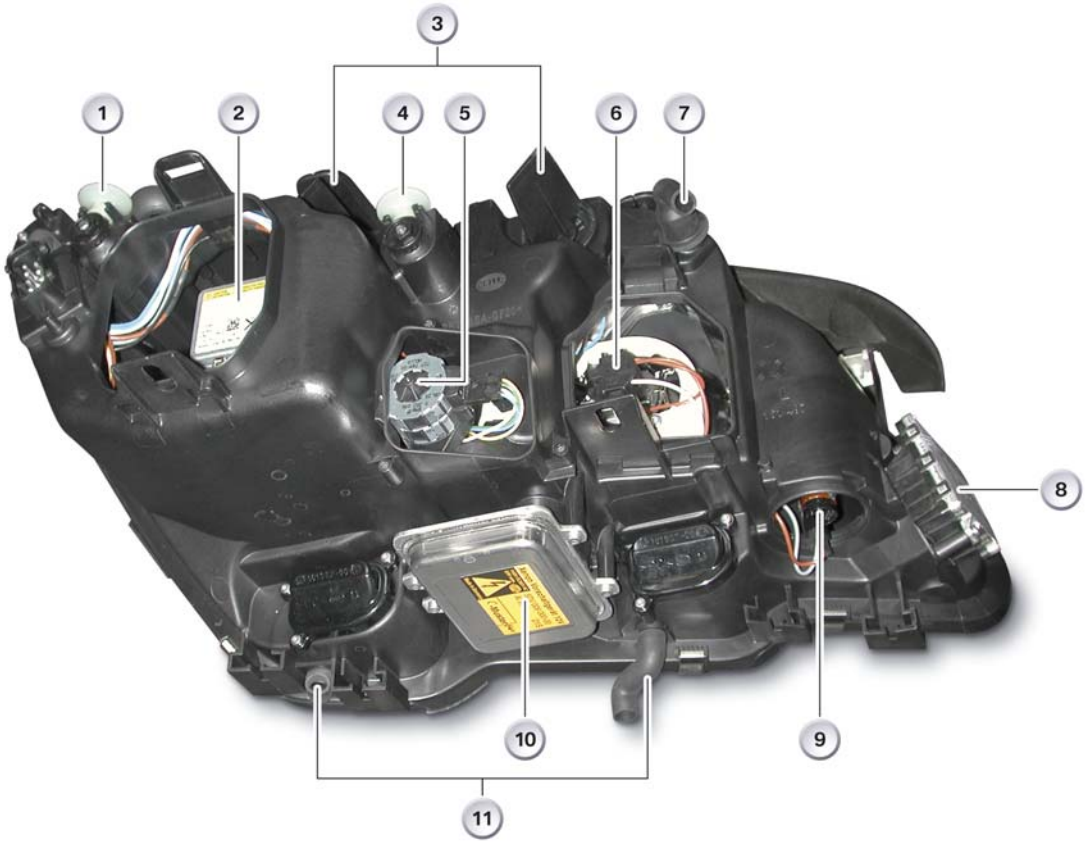

Design of Bi-Xenon Headlight

Index	Explanation	Index	Explanation
1	Adjusting screw	7	Ventilation hose
2	D1S lamp (replaceable)	8	Stepping motor controller SMC (replaceable)
3	Direction indicator (replaceable)	9	Bulb for parking light (replaceable)
4	Adjusting screw	10	Control unit for bi-xenon light
5	Stepping motor (replaceable)	11	Ventilation hose
6	Bulb for high beam light (replaceable)		

Light	Number (per car)	Power [W] (per light)
Front parking light	2	10
High beam light	2	55
Bi-xenon	2	35
Front direction indicator	4	21
Additional direction indicator	2	5
Fog light	2	55
Side-marker lamp (US only)	2	5

cardiagn.com

Headlight Washer System

From March 2005 production, the headlight washer system will be included in the basic equipment specification in all E65/E66 models. The high pressure nozzle is no longer attached to the headlight but attached to the carrier of the bumper trim. The nozzle is aligned in such a way that only the lens in the area of the low beam light is cleaned. The shape of the nozzle and its cover cap have been adapted to the new design.

Index	Explanation
1	High pressure nozzle
2	Retaining screws

Front Fog Light

The front fog light has been modified. It is the same as the fog light of the E60 with a new housing and a new trim.

The procedure for removing the fog light has changed. It is necessary to remove the front assembly underside protection in order to remove the fog light. Then unclip the fog light trim and release the retaining screw. Finally unclip the fog light towards the rear.

Index	Explanation
1	Fog light
2	Adjustment screw
3	Retaining screw
4	Fog light trim

cardiagn.com

Tail Lamp Assemblies

The rear light cluster of the E65/E66 is split into two parts (formerly three parts). One part is integrated in the side panel of the body while the other part is integrated in the trunk lid.

The outer contour and the mounting of the rear lights in the quarter panels have not changed but the internal design has been completely changed.

The rear lights in the trunk lid are newly designed. Only white direction indicators and silver bulbs for the rear direction indicators are available.

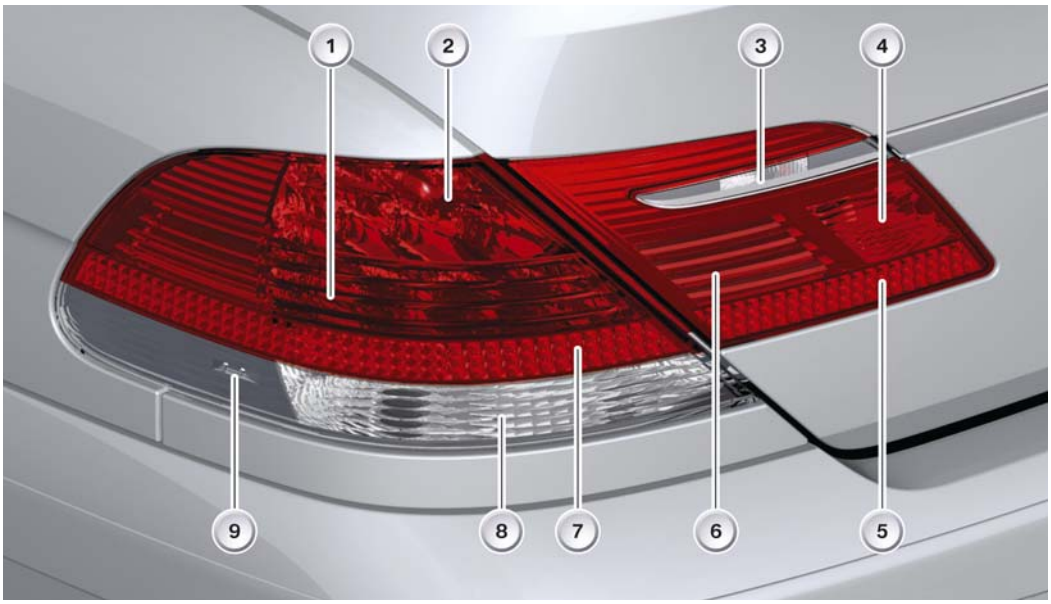

Index	Explanation	Index	Explanation
1	Tail light	6	Tail light 2
2	Brake light	7	Rear deflector 2
3	Reverse light	8	Rear direction indicator
4	Rear fog light/brake force display	9	Side marker light
5	Rear reflector 1		

Light	Number per car	Power [W] (per light)
Tail light 1	2 x 4 LEDs	
Tail light 2	2 x 4 LEDs	
Brake light	2 x 16 LEDs	
Reversing light	2	16
Rear direction indicator	2	21
Rear fog light/brake force display	2	21
Rear side marker	2 x 2 LEDs	

cardiagn.com

Tail Lights

The tail lights of the E65/E66 have fibre-optic waveguides similar to the E39 sport wagon.

Each of the two tail lights (right or left side of the car) comprises two fibre-optic modules that are each made up of four fibre-optic waveguides. The four fibre-optic waveguides are arranged one on top of the other and each supplied with light by an LED. Because the four LEDs are connected in series, the entire rear light section must be replaced if one LED fails.

The advantage of fibre-optic technology lies in the fact that LEDs have a significantly longer service life and a lower energy requirement than conventional bulbs. The illumination of the tail light is considerably more uniform than that of a bulb, which is bright in the middle and grows much darker towards the edges. Another reason for using this technology is that the design simply looks better.

Index	Explanation
1	Supply points for wave guide

Brake Light

The left and right brake lights are each generated by 16 LEDs. Unlike the parking light LEDs, the brake LEDs are connected in parallel, i.e. if one LED fails the other LEDs remain operational. The LED module can be replaced. When the brake light is actuated, tail light 1 is also switched on - even if the light was not switched on. The high-mounted brake light remains unchanged.

cardiagn.com

Brake Force Display

The rear fog lights are also used for the brake force displays (two-stage brake lights). The car speed must be > 5 km/h for the brake force displays to be activated.

And at least one of the following conditions must also be satisfied:

- Braking deceleration > 5 m/s2 and/or
- Control intervention by the anti-lock braking system.

The information on car speed, braking deceleration and control intervention by the anti-lock braking system is received by the light module in the form of CAN messages from the DSC. The light module activates the brake force display when the above mentioned conditions are satisfied.

The brake force display remains activated until the driver lets off the brake pedal.

Rear Side Marker Light

The rear tail lamp is equipped with two extra LEDs which shine through openings in the side trim directly as a side-marker lamp.

These LEDs cannot be replaced.

cardiagn.com

Bus Overview

Changes in the E65/E66 Bus Diagram in 03/2005

Adaptive Directional Headlights and Light Module

When adaptive directional headlights were introduced, it was necessary to connect the AHL control unit to the PT-CAN.

The AHL control unit will be removed from the vehicle in 03/2005 because this function is to be taken over by the LM light module. The light module receives the information from the PT-CAN (yaw rate, road speed and steering angle) via a direct PT-CAN connection.

MOST

The KHI headphones interface KHI and LOGIC7 control units have changed places in the MOST ring.

PT-CAN

Active Cruise Control II ACC II is used instead of Active Cruise Control ACC.

Changes in the E65/E66 Bus Diagram Since 03/2004

There have already been some changes in the bus structure due to the ISIS in 03/2004

K-CAN S

The RDC control unit was removed because the tire monitoring function was taken over by the Run Flat Indicator software in the DSC.

Dropping of the KHA module (headphones connection) as a control unit on the K-CAN. The jacks of the headphone connections for rear-compartment entertainment are connected directly to the KHI (headphones interface).

MOST

Extended to to include the SDARS (Satellite Digital Audio Radio Services) control unit.

byteflight

The satellites are connected directly to the SGM (Safety and Gateway Module) through integration of the SIM in the gateway module. The star structure of the byteflight has been retained. The SGM serves as the main gateway for the entire bus system.

PT-CAN

The PT-CAN has been extended to include the a second DME control unit. This was deemed necessary when the 12-cylinder engine was introduced in the 760i/iL.

cardiagn.com

E65/66 Bus Topology Chart

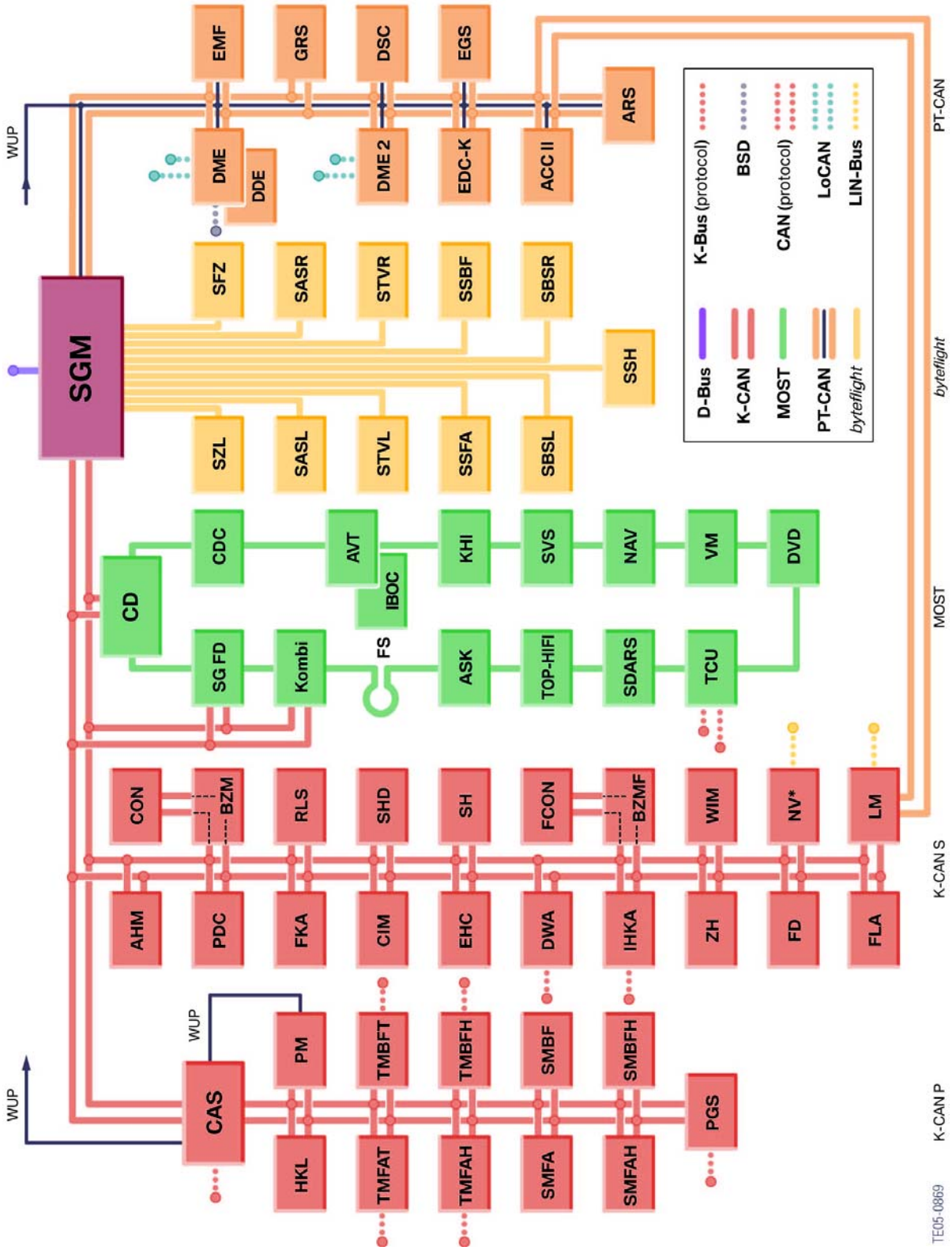

cardiagn.com

E65/E66MU Energy Management

The CAS and DME control units are no longer powered by separate outputs on the power module. These control units are combined together with the light module, the instrument cluster and the FBD (remote control receiver) on a common connection.

This output is known as Terminal 30 Special loads/consumers (Kl. 30SV). This terminal can be switched by means of a hardware alteration in the power module.

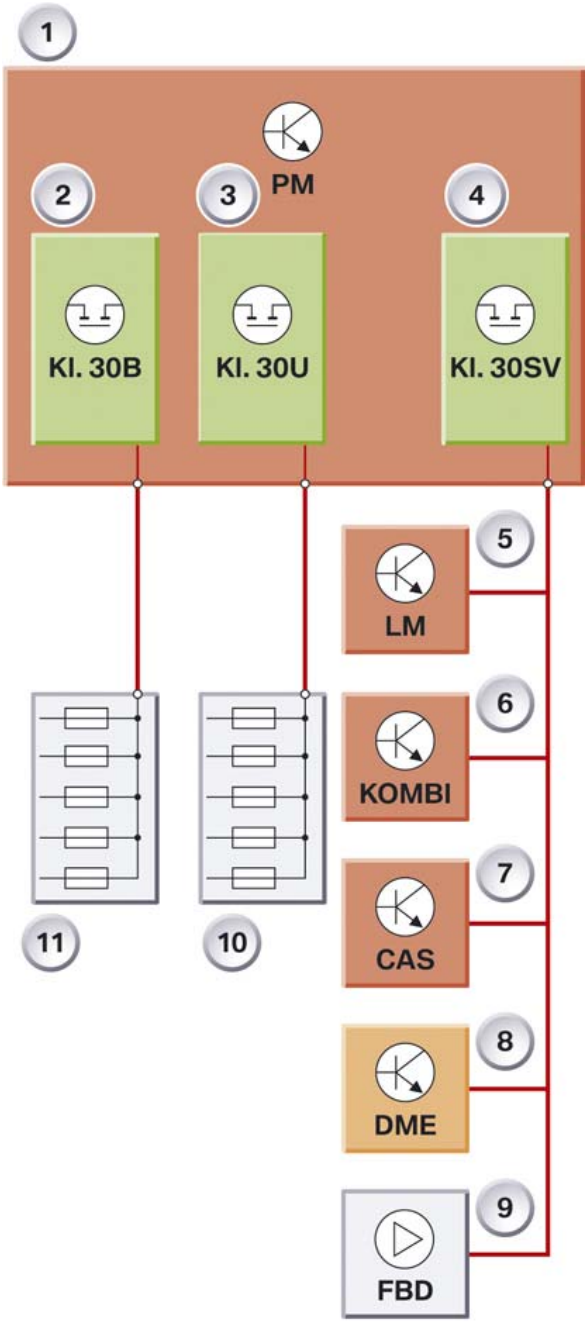

Index	Explanation
1	Power Module
2	Terminal 30B
3	Terminal 30U
4	Terminal 30SV (special loads/consumers)
5	Light Module
6	Instrument Cluster
7	Car Access System (CAS)
8	Digital Motor Electronics (DME)
9	Remote Control Receiver (FBD)
10	Power Distribution, Rear
11	Power Distribution, Front

cardiagn.com

New Deactivation Strategy

In the previous concept of power module deactivation, only the path of terminal 30 loads/consumers (term. 30B and term. 30U) was de-energized in the event of a closed circuit current fault. Only the current at term. 30U and term. 30B was evaluated to detect this fault.

What is new is that terminal 30SV can now also be switched. However current measurement is not possible at terminal 30SV. Increased closed-circuit current consumption is detected indirectly by monitoring bus communication on the K-CAN.

If bus communication is present without reason, terminal 30SV is briefly disconnected from the power supply.

In this way it is possible to rectify possible problems caused by faulty software because the control units should switch back into sleep mode properly after the restart. The information on a problem however is stored in the power module and the workshop can search for a fault in the affected control units at terminal 30SV.

Disconnection of term. 30SV is performed only if term. 30B and term. 30U were already disconnected beforehand or at the same time and if none of the light functions (parking lights, hazard warning system) is switched on.

Deactivation strategy in event of excessive closed-circuit current

1. Reset of terminal 30U and terminal 30B in event of violation of the closed-circuit current threshold (as previously)
2. Disconnection of terminal 30U and terminal 30B in event of renewed violation of the closed-circuit current threshold (as previously)
3. Reset of terminal 30SV for 10 seconds (new) if the bus users on the K-CAN (PM, CAS, LM, instrument cluster, DWA) have not gone to sleep within 5 minutes of terminals 30U and 30B being disconnected.

The "Term. 30SV reset" procedure is carried out only once within a closed-circuit current monitoring phase as this action causes the entire vehicle electrical system to be cut in (high current consumption).

Deactivation strategy in event of too many wake-up operations

1. Disconnection of terminal 30U and terminal 30B if the wake-up counter threshold is reached, currently 30 wake-up operations
2. Reset of terminal 30SV for 10 seconds (new) if the bus users on the K-CAN (PM, CAS, LM, instrument cluster, DWA) have not gone to sleep within 5 minutes of terminals 30U and 30B being disconnected.

Note: The connected control units are not operational during the period when terminal 30SV is deactivated. The car cannot be unlocked with the remote control during this phase.

cardiagn.com

It is still possible to open the car door with the mechanical key, but this results in an alarm being triggered if a movement in the passenger compartment is detected as the anti-theft alarm system is still armed and responds as if for example a window has been broken. The anti-theft alarm system is deactivated by inserting the ID sensor in the CAS slot, whereby disarming is signalled to the anti-theft alarm system if the vehicle electrical system is activated.

Note: The instrument cluster retains the data on account of the brief disconnection (10 seconds). Only the clock is slow by the corresponding time.

Normal Sleep Procedure

In a "normal" car sleep procedure, the CAN bus goes to sleep a few minutes after "terminal R OFF". After 16 minutes the PM sends the signal to deactivate the loads/consumers and the bus is woken up briefly in the process. The "VA_Roof" driver is deactivated and the CAN bus goes to sleep again. After 60 minutes have elapsed (codable value if no telephone/EGS logs in as a load/consumer in stationary mode 16 minutes) the "VA_Body" driver is also deactivated, by means of which a current of approx. 200 mA for relay activation for VA_K is likewise omitted. The power module then goes into closed-circuit current monitoring mode.

Detection of a Closed-Circuit Current Violation

During closed-circuit current monitoring the power module measures the voltage value every 5 seconds and the current value every 60 seconds.

The power module goes into increased closed-circuit monitoring mode in the event of a closed-circuit current violation (I > 80 mA). Here the power module determines the present current value every 1.5 seconds over a waiting period of 8 minutes. During this period the vehicle electrical system is given the opportunity to accept a normal closed-circuit current again.

If during the 8 minutes a current is detected which is below the closed-circuit current threshold of 80 mA for longer than one minute, the waiting period is started again and the power module goes into closed-circuit current monitoring mode again.

If the closed-circuit current violation persists after the waiting period has elapsed, the shutdown counter is started (90 seconds).

Then a general reset is performed. General reset means that all loads/consumers supplied by the power module with the exception of terminal 30SV and the anti-theft alarm system are disconnected from the battery for 30 seconds. Then the closed-circuit current is monitored for a further 8 minutes.

If the closed-circuit current violation persists, the shutdown counter is started again (90 seconds). Then all the loads/consumers are deactivated (with the exception of terminal 30SV and the anti-theft alarm system).

If a further closed-circuit current violation is indirectly determined via bus activity over a time period of 5 minutes, a one-off reset of terminal 30SV is performed for 10 seconds.

cardiagn.com

Sleep Procedure Without Closed-Circuit Current Violation

Index	Explanation
1	Terminal R "OFF"
2	After 16 minutes the PM sends the signal to deactivate the loads/consumers and the bus is woken up briefly in the process. The "VA_Roof" driver is deactivated and the CAN bus goes to sleep again.
3	After 60 minutes have elapsed (codable value if no telephone fitted 16 minutes) the "VA_Body" driver is also deactivated. The power module then goes into closed-circuit current monitoring mode.

cardiagn.com

Sleep Behavior with Closed-Circuit Current Violation

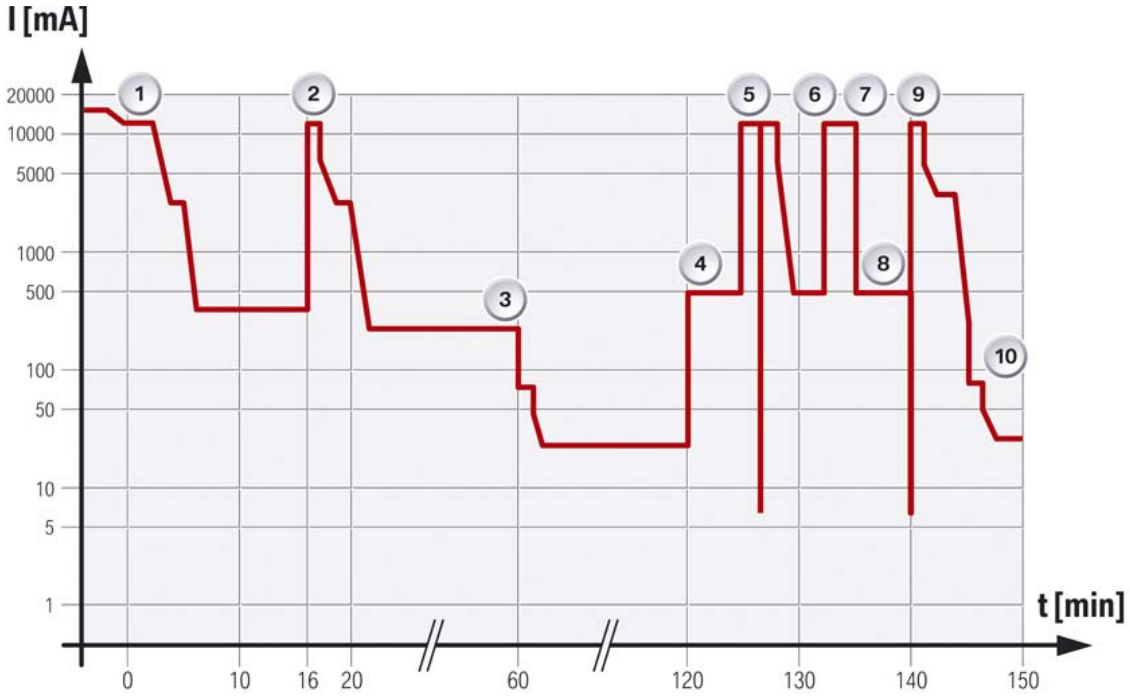

Sleep Behavior with Closed-Circuit Current Violation

Index	Explanation
1	Terminal R "OFF"
2	After 16 minutes the PM sends the signal to deactivate the loads/consumers and the bus is woken up briefly in the process. The "VA_Roof" driver is deactivated and the CAN bus goes to sleep again.
3	After 60 minutes have elapsed (codable value if no telephone fitted 16 minutes) the "VA_Body" driver is also deactivated. The power module then goes into closed-circuit current monitoring mode.
4	Closed-circuit current violation with 500 mA. The current violation at the end of the waiting period of 8 minutes persists.
5	Entry in the fault memory with the associated current value. The CAN bus is woken up and the shutdown counter started for 90 seconds. A general reset is performed for 30 seconds when the shutdown counter expires. Simply the KL30SV driver and the power supply for the anti-theft alarm system are not disconnected.
6	The current violation at the end of the second waiting period of 8 minutes persists. The CAN bus is woken up again and the shutdown counter started again for 90 seconds.
7	Terminal 30U, terminal 30B and all other drivers are disconnected from the battery when the shutdown counter expires. Sole exception: KL30SV and the power supply for the anti-theft alarm system are not disconnected.
8	One or more control units (LM, IKE, CAS, DME) is/are active for longer than 5 minutes.
9	Reset of KL30SV for 10 seconds (if no light function is active).
10	Reset of KL30SV for 10 seconds (if no light function is active).

cardiagn.com

Measures for Maintaining Battery Starting Capability (SoC)

Electric Loads/Consumers in Stationary Mode

Certain loads/consumers may be active even when closed-circuit current monitoring of the power module is already running. This is necessary for various reasons:

- Legally required electric loads, e.g. parking lights, hazard warning system
- Convenience for the customer, e.g. radio function, telephone

These loads/consumers must be excluded from the closed-circuit monitoring system in order to avoid misinterpretation in the power module. For this purpose, these loads/consumers must log in with the power module. In turn, the power module recognizes the activity and accepts the higher power consumption. When these systems are deactivated, the corresponding control units log off from the power module.

Disconnection of Terminal 30

In the previous concept of power module deactivation, terminal 30 (term. 30U and term. 30B) was not disconnected in the case of a car without a closed-circuit current violation. A slow drop in the capacity of the car battery (SoC = state of charge) below the starting capability limit without a discernible reason was possible and this effect was counteracted by no action of the power module.

The following function is new:

When loads/consumers are logged off, a codable waiting time (currently 5 minutes) ensues from the point "terminal R OFF".

Term. 30U and term. 30B are disconnected from the battery when the state of charge drops below the starting capability limit.

This disconnection is not preceded by a "general reset".

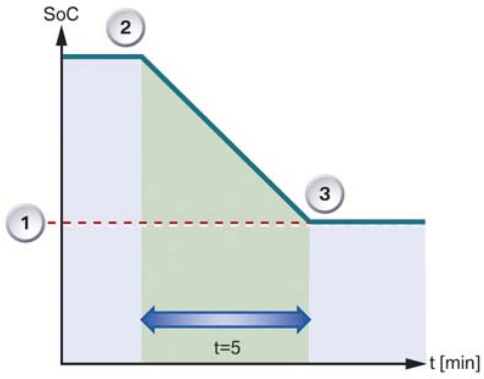

Index	Explanation
1	Starting capability limit
2	Terminal R “OFF”
3	Disconnection of terminal 30U and 30B

cardiagn.com

Shortening of Run-On Time

Before Facelift (3/2005) - The power module deactivation in a car with a closed-circuit current fault, a further battery disconnection on account of a closed-circuit current violation takes place only after a run-on time of 60 minutes (16 minutes).
As a result of this long run-on time the state of battery charge could drop far below the value of the starting capability limit without an intervention by the power module.

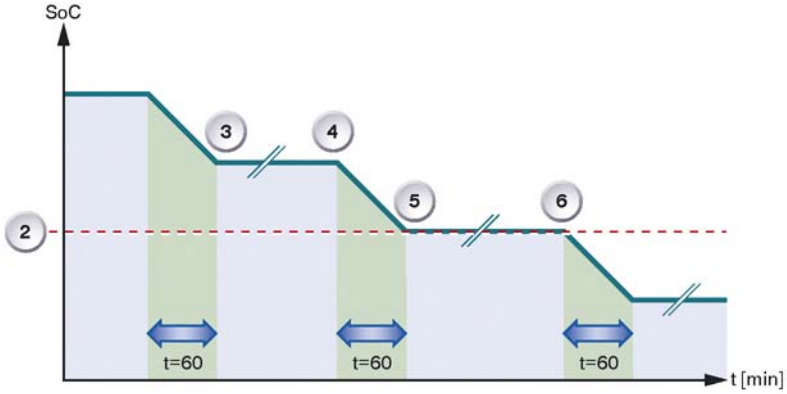

As of 3/2005 - The improvement of the new deactivation strategy becomes apparent with a renewed activation of the loads/consumers (by a terminal change or unlocking of the car) in the event of a previously ascertained closed circuit current violation or an extended starting capability limit which has already been reached.

In this case, closed-circuit current monitoring already begins after 2 minutes (normally 60 minutes). Together with the fixed waiting period of 8 minutes, it would therefore take a maximum of 10 minutes until the shutdown counter is started.

The shortened run-on time is reset again as soon as the power module has registered an "engine running" status once.

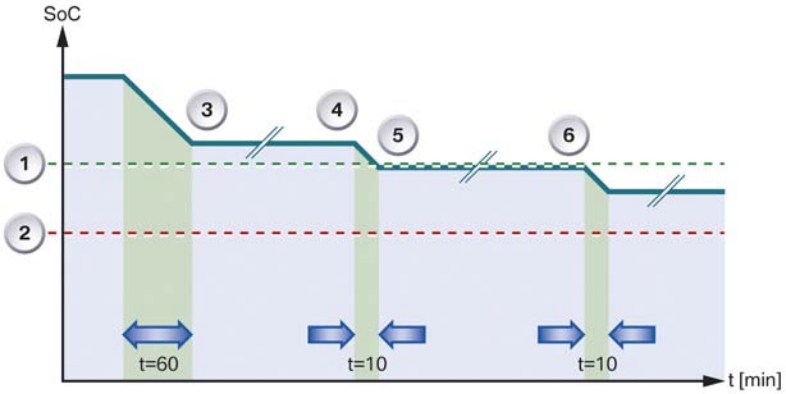

Index	Explanation	Index	Explanation
1	Extended starting capability limit	4	Change of terminal status or unlocking via FBD
2	Starting capability limit	5	2nd deactivation by power module
3	1st deactivation by power module	6	Change of terminal status or unlocking via FBD

cardiagn.com

Display and Control Elements (iDrive)

Controller

The iDrive controller has changed in appearance. The control knob and base are painted in a higher quality titanium finish and contains a leather insert. The operating principle of the controller has not changed.

The controller can be moved in eight directions to select the submenus. The controller is turned/pressed to select the functions. By pressing the menu button, the customer returns from each submenu immediately to the main menu. The customer can use the freely programmable button to call up a frequently used function more quickly.

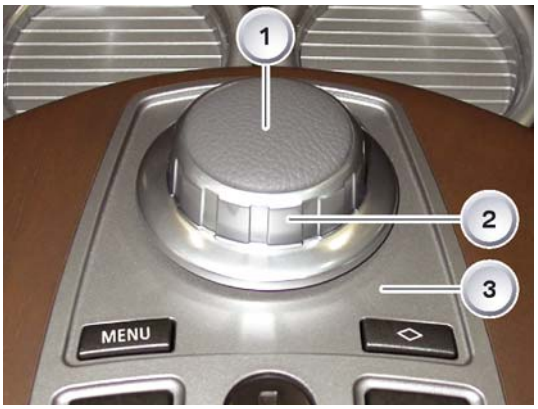

New Controller

Index	Explanation
1	Controller
2	Button for main menu
3	Button for speech processing system

Central Display

The graphics of the user interface in the central display have been modified. The main menu still features the eight submenus, four of which (Communication, Navigation, Entertainment, Air Conditioning) are now color-coded the same as in the E60. The new shape of the controller is now depicted in the main menu.

Sub-Menu	Color
Communication	Blue
Navigation	Green
Entertainment	Orange
Air Conditioning	Red
All others	Brown

cardiagn.com

Note: The changes in the structure of the submenus will be shown using the Entertainment submenu as an example.

Entertainment Submenu

The Entertainment submenu is structured in accordance with the two-list principle. The left list contains the higher-level functions and the right list the lower-level functions. The list which is active is displayed in a lighter shade.

There is no background graphic.

Note: Switching between the two list is performed by turning the controller and not by pushing in the desired direction.

An arrow appears for the scroll function if the lists contain more lines than can be shown in the display. The activated function is marked by a tick or check symbol. The toolbox (e.g. Traffic Program TP) is always located in the same place. The activated toolbox is indicated by a green LED.

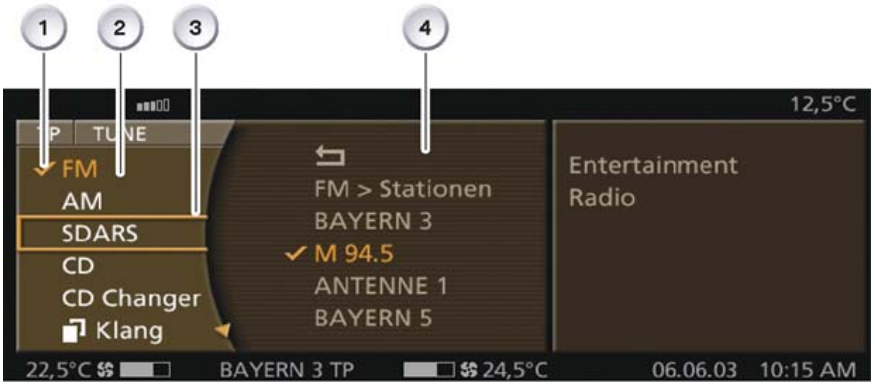

Index	Explanation
1	Activated function is indicated by a tick/checkmark
2	Active list
3	Current position in submenu
4	Options/Passive list

cardiagn.com

Air Conditioning Submenu

Air Distribution Function

The air distribution settings for driver and front passenger are displayed on the center of the control display screen. The established symbols are used for air distribution. The activation of an air distribution button is indicated by a green LED - orange symbols.

The automatic program can be set in the following three stages:

- Soft
- Medium
- Intensive.

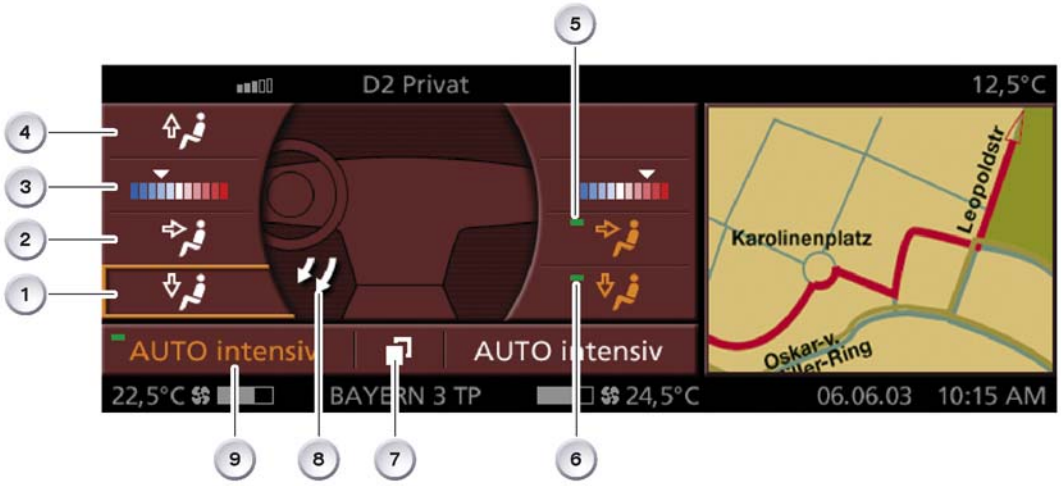

Index	Explanation
1	Bottom air distribution (driver) not active; current position on side
2	Middle air distribution (driver) not active
3	Air temperature setting
4	Top air distribution (driver and front passenger) not active
5	Middle air distribution (front passenger) is active
6	Bottom air distribution (front passenger) is active
7	Back to Air Conditioning submenu
8	Graphic representation of position of air distribution in car (preview principle)
9	Automatic program (driver's side) is active

cardiagn.com

Engine Oil Level Display

The E65/E66 is equipped with an electronic oil level display. The present oil level is indicated in the central display when the car is moving or when it is stationary with the engine running.

To activate the "Engine oil level" display in the On-board Data submenu, select the Oil level function.

Possible indications:

- "Engine oil level OK"
- "Oil level at minimum. Top up 1l engine oil"
- "Oil level below minimum. Top up 1l engine oil"
- "Engine oil level too high"
- "Measurement not possible at present".

The dipstick is still fitted and has a modified handle in black. The customer only receives a description of the engine oil level display in the central display in the Owner's Manual.

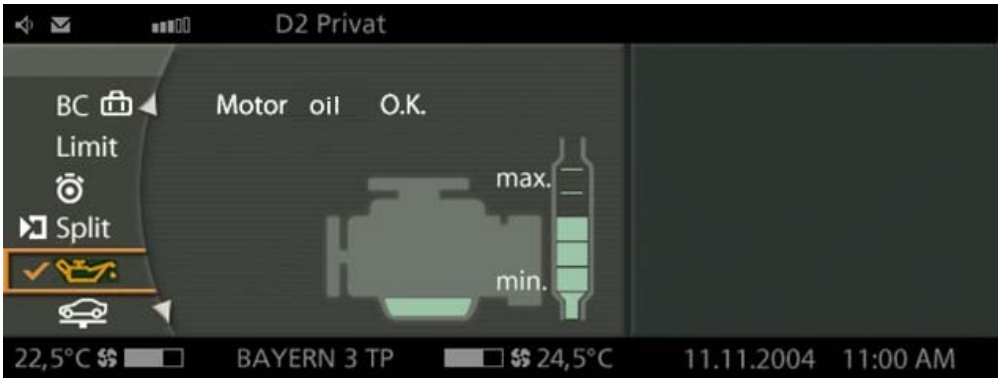

cardiagn.com

Entertainment

There are two redesigned modules on the facelift with respect to the entertainment system. They are:

- ASK
- CD changer

Audio System Controller (ASK)

In addition to the new trim shape and paint finish, the audio system controller now has two extra buttons:

- AM/FM button for directly switching the radio to and between AM/FM reception
- MODE button for changing next audio source.

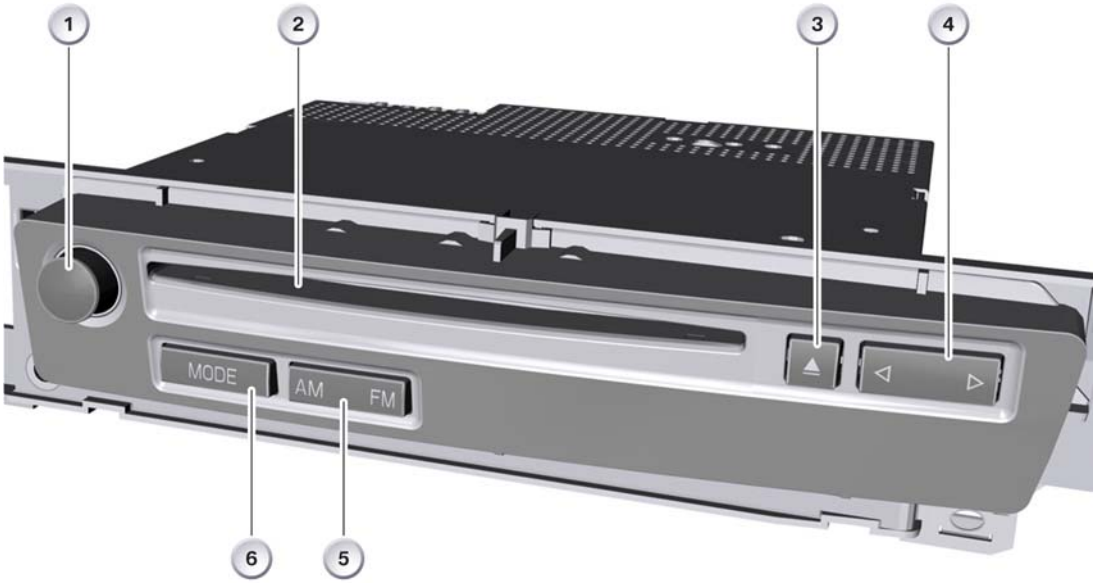

Audio System Controller

Index	Explanation
1	Rotary push button for switching on/off and volume control of audio system
2	CD drive slide-in compartment
3	Eject button
4	Search button
5	AM/FM button
6	MODE button

cardiagn.com

CD Changer

The CD changer available for the E65/66 facelift (Option 672) now supports the playback of CDs with MP3 and WMA files. The MP3/WMA files are decoded in the CD changer.

What is MP3?

- Stands for MPEG Layer 3 (MPEG = Moving Pictures Expert Group)
- Is a music compression method. It is based on the formats originally designed for digital sound or picture transmission (MPEG 1 or 2)
- It requires 8 to 12 times less storage space for virtual CD quality. Approximately 10 audio CDs in compressed form can be stored on a standard 640 MB data CD.
- It was developed by the German Fraunhofer Institute for integrated circuits (Fraunhofer IIS Audio).

What is WMA?

- Like MP3, Windows Media Audio (WMA) is a compression method for audio data that produces a sound with more detail than MP3 at low bit rates (up to approximately112 kbit/s).

Operation, Display, and Playback

The CD changer is operated by means of the controller.

Information such as folder name, music track, or artist are shown in the central display. Detailed information based on ID3 tags can also be represented. ID3 tags contain additional information that is added to the music data.

If a basic audio system is installed, the decoded data of the CD is sent as digital signals via the MOST to the ASK. Here they are converted to analogue data and output via the amplifier and the speakers.

If a 'Top-HiFi' system (Logic7) is installed, the decoded audio data are transmitted in digital form via the MOST from the CD changer directly to the Top-HiFi amplifier, from where it is output.

The CDs are played back even when the CD changer is simultaneously holding CDs with MP3 files, WMA files, and "normal" audio data.

Display of ID Tags

cardiagn.com

Comfort Access

Comfort Access (SA 322) is offered as an option for the 750i/iL & 760i/iL.

"Comfort access" is a passive access system. This means the vehicle can be unlocked by grasping the outer door handle, provided the identification transmitter is located within a radius of no more than approx. .5 - 1.5 m from the vehicle.

With Comfort Access it is sufficient for the driver to simply carry the identification transmitter on his/her person in order to unlock, lock or start the vehicle.

With this system the operation/functions are distributed among several control modules. Comfort Access system utilizes the same modules that are utilized for the Central Locking function plus a Comfort Access module specifically for monitoring the systems antennas, activation of the remote receiver and monitor status of the Electronic Outer Door Handle.

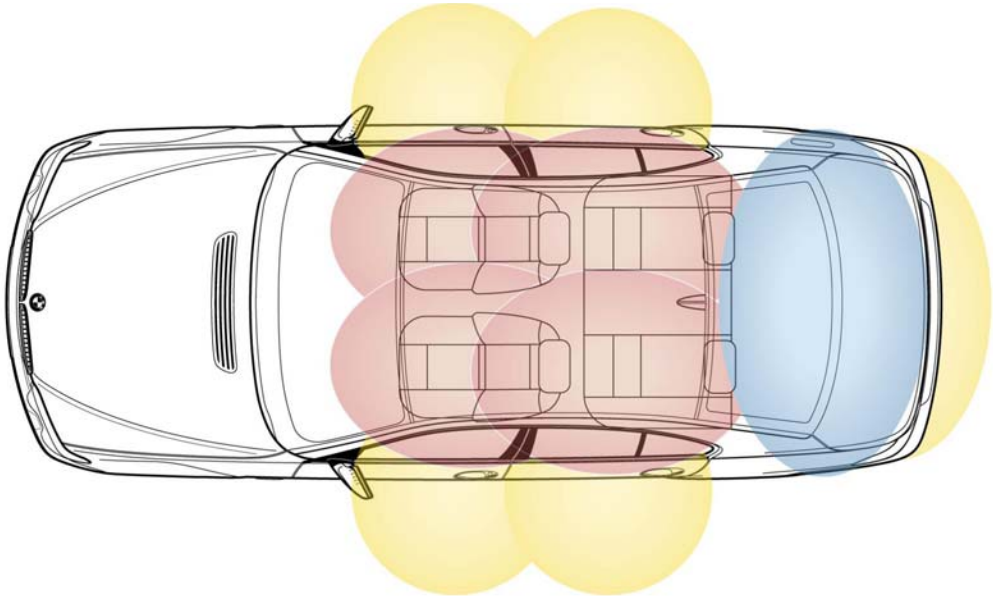

System Overview

With regard to the Comfort Access System the remote control is referred to as an Identification Transmitter since the remote is transmitting ID data to the vehicle without any action being performed by the user (buttons on the remote do not need to be pressed).

cardiagn.com

Passive Entry

Passive Entry enables access to the vehicle without operating the ID Transmitter/remote control.

Unlocking

As the customer approaches the vehicle with the ID Transmitter located on his/her person and places their hand between the door handle and the door panel or depresses the button on the trunk lid, the system ”wakes up” and a signal is transmitted via K-TAGE Bus to CAS. CAS in turn requests a verification that a valid ID transmitter is located within the radius of the transmitting antenna, via K-TAGE Bus to the door modules or antenna located on the rear bumper.

The request is made by transmitting a signal from the respective door handle module or antennas located in the rear bumper to the ID Transmitter, which returns an ID signal that is received by the antenna located on the rear window.

The signal received by the antenna on the rear window is transmitted to the CAS and the ID information is verified. If the ID is valid the door can be unlocked by pulling up on the door handle or trunk will be unlocked by depressing the button.

Passive Go

The passive go function makes it possible to start the vehicle without the ID transmitter being inserted in its holder.

Note: The vehicle cannot be started without a valid ID transmitter being located in the interior of the vehicle.

Starting

Upon entering the vehicle the engine can be started by pressing the start button with the brake pedal depressed, as long as the valid ID transmitter is located in the interior of the vehicle.

The presence of a valid ID transmitter is determined by the interior antennas and validated by the CAS which will release the start enable signal.

cardiagn.com

Passive Exit

The passive exit function makes it possible to lock the vehicle without actively using the ID transmitter/remote control.

Note: The vehicle cannot be unlocked without a valid identification transmitter within a radius of .5 - 1.5 m from the respective antenna.

Locking

On exiting the vehicle the doors can be locked by pressing on the door handle, as long as all doors are closed and a valid ID transmitter is determined to be located outside of the vehicle. In the event that the system detects a valid ID transmitter inside the vehicle and/or the system does not detect the presence of a valid ID transmitter on the outside of the vehicle, the doors will unlock and display a message on the check control display.

Special Comfort Access Functions

The Comfort Access System offers additional special functions that are determined by the actions of the user such as:

ID Transmitter Remains in Vehicle

If another ID transmitter is detected on the inside of the vehicle and a valid ID transmitter is detected/determined to be located on the outside, then the transmitter located on the inside is ignored/deactivated and the vehicle is secured. Once the vehicle is unlocked again the key that was deactivated is reactivated.

ID Transmitter Remains in Trunk

When the trunk lid is closed/locked a status signal is received by the power module which transmits the information to the Comfort Access module . The Comfort Access module starts a search for an ID transmitter in the trunk, if a valid transmitter is located by the antenna in the trunk a signal is sent to the CAS, which in turn transmits a request to the power module to open the trunk.

In order to lock the trunk with a spare key located inside:

- It must be determined that a valid ID transmitter is located on the outside of the vehicle within the radius of the antenna.
- Valet switch must be active

Engine Start Disable

The engine cannot be started if the identification transmitter is located in the luggage compartment of the unlocked vehicle.

cardiagn.com

Starting Engine without ID Transmitter

The function makes it possible to start the vehicle within 10 s after "engine OFF" without detecting the identification transmitter. This function is intended for cases where the identification transmitter is not detected due to high frequency interference, as an example.

Check Control Message, Terminal 15

The Comfort Access System enables terminal selection without the ID transmitter being inserted in its holder. It is possible that terminal 15 is selected by pressing the START-STOP button. A corresponding check control message is shown in the instrument cluster after the door is opened. An audible signal also sounds.

Note: The battery may be discharged if the driver ignores the warnings and locks the vehicle.

Unintentional Wake-up Function

In order to avoid waking the electronic outer door handle module by touching the outer door handle without a valid identification transmitter. The outer door handle module is requested by CAS to send a signal to the ID Transmitter requesting the transmission of a valid/authentication signal.

If no valid ID transmitter is detected, the electronic outer door handle module receives this information from the CAS and in this case, the electronic outer door handle module remains inactive until a valid identification transmitter is detected.

Locking with Engine Running

The vehicle can also be unlocked with the engine running if the engine was started with passive go. When leaving the vehicle, the ID transmitter must also be taken and the vehicle locked from the outside.

cardiagn.com

System Components

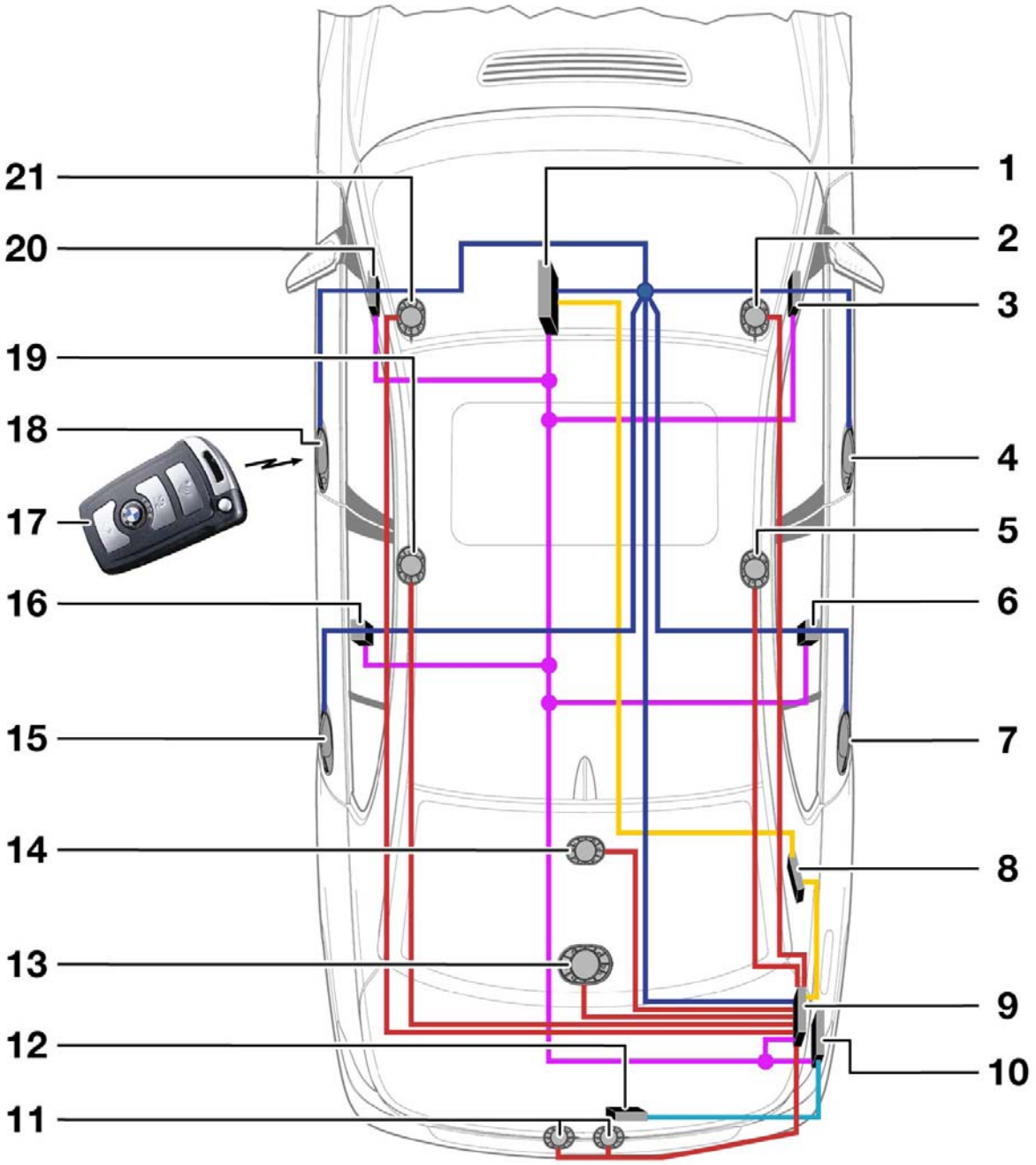

- Button, tailgate to power module
- K-CAN Periphery
- Aerials
- FBD receiver
- K-TAGE sub-bus

cardiagn.com

Legend for System Components

Index	Explanation	Index	Explanation
1	Car Access Control Module (CAS)	12	Trunk Release/Open Button
2	Antenna, Interior, Right Front Footwell	13	Trunk Antenna
3	Door Module, Passenger Door	14	Antenna, Rear Parcel Shelf
4	Electronic Outer Door-Handle, Passenger Door	15	Electronic Outer Door-Handle, Rear Door Driver's Side
5	Antenna, Interior, Right Rear Footwell	16	Door Module, Rear Driver's Door
6	Door Module, Rear Passenger Door	17	Identification Transmitter
7	Electronic Outer Door-Handle, Rear Door Passenger Side	18	Electronic Outer Door-Handle, Driver's Door
8	Remote Control Receiver (FBD)	19	Antenna, Interior, Left Rear Footwell
9	Comfort Access Control Module	20	Door Module, Driver's Door
10	Power Module	21	Antenna, Interior, Right Front Footwell
11	Antennas, Rear Bumper		

cardiagn.com

Comfort Access Module (CA)

The Comfort Access Module located in the right side of the trunk near the Power Module provides the following functions:

- CAN Bus Interface (K-CAN Periphery & K-TAGE)
- Electronic Outer Door Handle (TAGE) interface
- Activation of the 8 inductive antennas
  - Initiates scan for ID Transmitter on interior of vehicle using the interior antennas (5)
  - Initiates scan for ID Transmitter in trunk of vehicle using the trunk antenna (1)
  - Initiates scan for ID Transmitter on exterior rear of vehicle using the bumper antennas (2)
- Simultaneous activation of Remote Control Receiver (FBD) during scan for ID Transmitters
- Stores fault memory for Electronic Outer Door Handle (TAGE) and inductive antennas
- Diagnostic Gateway for Electronic Outer Door Handles (TAGE)

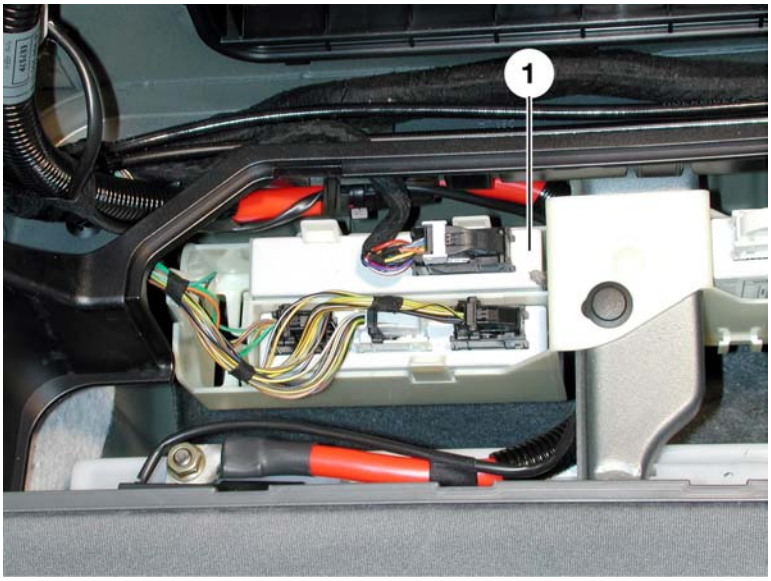

Index	Explanation
1	Comfort Access Module (CA)

cardiagn.com

With the introduction of the Comfort Access system the K-CAN Periphery has been extended as shown below:

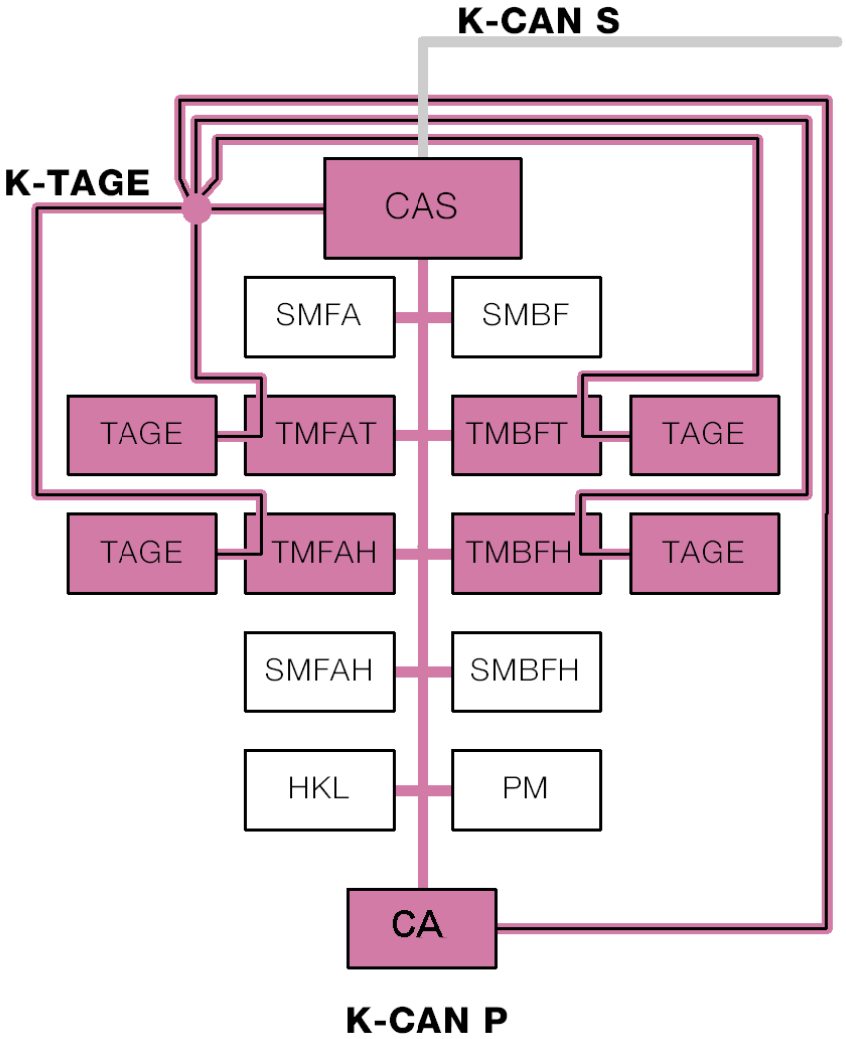

Index	Explanation	Index	Explanation
CA	Comfort Access Control Module	TAGE	Electronic Outer Door Handle
CAS	Car Access System	TMBFT	Door Module, Passenger Door
HKL	Trunk Lid Lift	TMBFTH	Door Module, Passenger Side Rear Door
PM	Power Module	TMFAT	Door Module, Driver's Door
SMBF	Seat Module, Passenger Seat Adjustment	TMFATH	Door Module, Driver Side Rear Door
SMBFH	Seat Module, Passenger Side Rear Seat Adjustment	K-CAN P	K-CAN PERIPHERY
SMFA	Seat Module, Seat Adjustment	K-CAN S	K-CAN SYSTEM
SMFAH	Seat Module, Driver Side Rear Seat Adjustment	K-TAGE	Sub-Bus, Electronic Outer Door Handle

Note: The K-TAGE Sub-Bus is only looped through the door modules, no exchange of information occurs.

cardiagn.com

Car Access Module (CAS)

The CAS is responsible for:

- Validation/authentication of ID Transmitter data
- Storing faults regarding ID Transmitter
- Activation of the validation process from trunk switch or starter switch

Electronic Outer Door Handle (TAGE)

The Electronic Outer Door Handles are responsible for:

- Detection of a pull on the outer door handle via an integrated hall sensor
- Detection of a push on the outer door handle via an integrated hall sensor
- Monitoring the capacitive sensor integrated in the door handle to detect the presence of a hand between the door handle and the door panel
- Activation of the transmit antenna located in the handle to provide an activation signal to the ID Transmitter
- Transmission of sensor data by way of the K-TAGE Bus from the door handle to the door module (pass through function only)

On vehicles equipped with Comfort Access the top half of the door handle has a chrome insert.

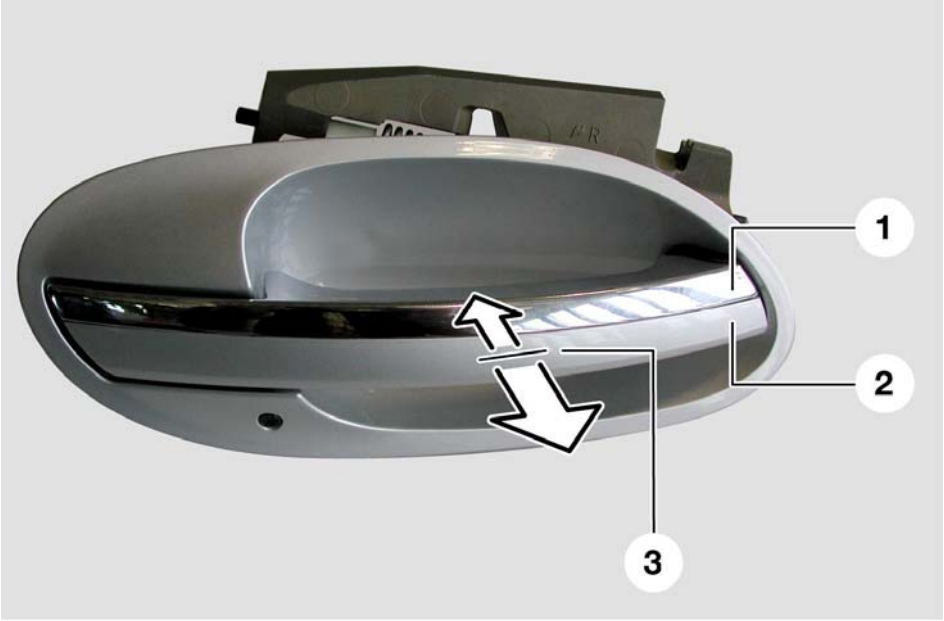

Index	Explanation
1	Chrome Insert
2	Door Handle
3	Rest/Zero position (Handle can be pushed in or pulled out approx. 3 mm)

cardiagn.com

Each Door Handle Module can be woken-up by pulling or pushing on the handle, when this occurs the status of the handle is transmitted to the door module and then onto the CAS and CA module via the K-CAN Periphery. The door handle also transmits a signal to the ID transmitter requesting it to transmit a validation signal, which is acquired by the remote Receiver antenna in the rear window and forwarded to the CAS for authentication. If the signal is recognized an enable signal is sent from the CAS to the respective door handle and the door can be unlocked.

Each door handle module is connected by a 4-wire connection to a respective door module.

Electronic Unlock Motor

Each lock in the vehicles doors incorporates an electric unlock motor. The motor assists in unlocking the locking pawl of the door in a timely manner after authentication of the ID transmitter and the handle being pulled.

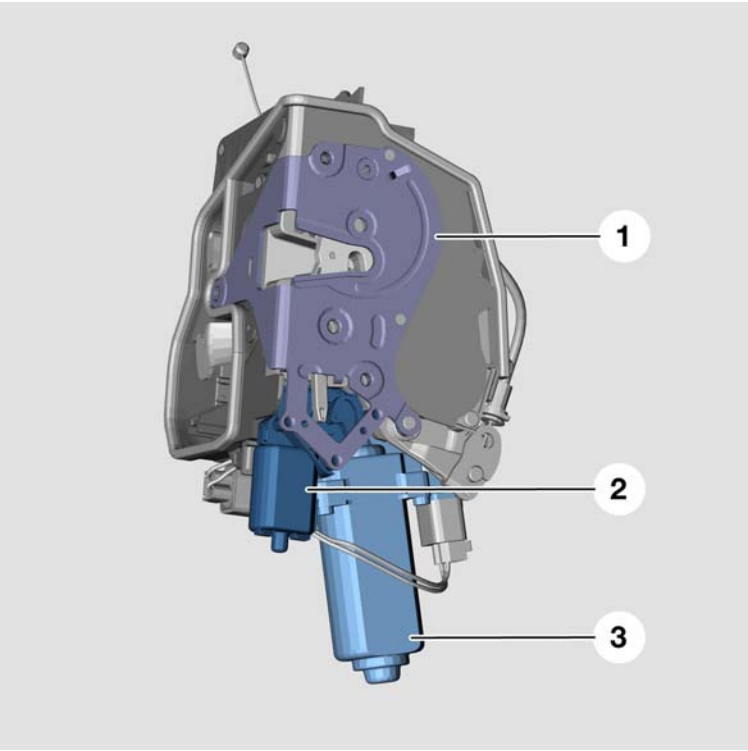

Index	Explanation
1	Door Lock
2	Electric Unlock Motor
3	Motor for Automatic Soft Close

cardiagn.com

ID Transmitter

The Remote Control/ID Transmitter is responsible for:

- Transmission of encrypted high frequency messages
- Reading/receiving of transmitted signals from inductive antennas
- Standard remote control functions via push button

Remote Control Receiver (FBD)

Incorporated into the rear window is an antenna that is used to receive the transmitted signal from the remote Control/ID transmitter. The signal is automatically transmitted from the ID transmitter upon relieving a request for validation from one of the exterior antennas.

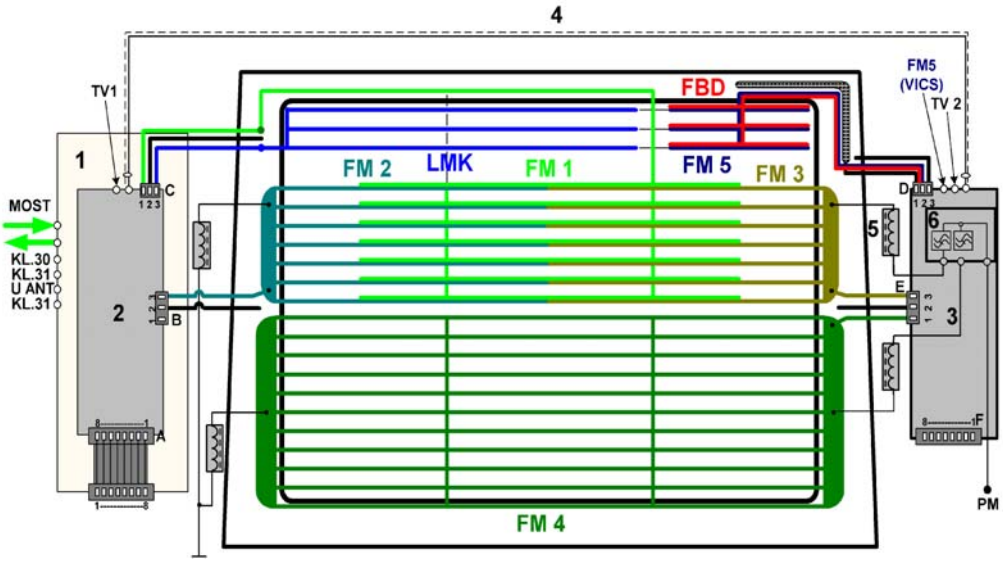

Index	Explanation
3	Antenna Amplifier
F	8-Pin Connector on Antenna Amp for wake-up signal for FBD Receiver
FBD	Antenna for Remote Control
KL. 30	Voltage Supply B+
KL.31	Ground

Antennas

On the 7 series a total of 12 antennas are used to monitor/communicate with the ID transmitter.

- 1 in each Door Handle (4)
- 1 in each Footwell (4)
- 1 in the Trunk
- 2 on the rear Bumper Cover
- 1 on rear Parcel Shelf

cardiagn.com

The antennas on the interior of the vehicle are inductive air core coil antennas that must be more than 15 mm from the surface that they are mounted to.

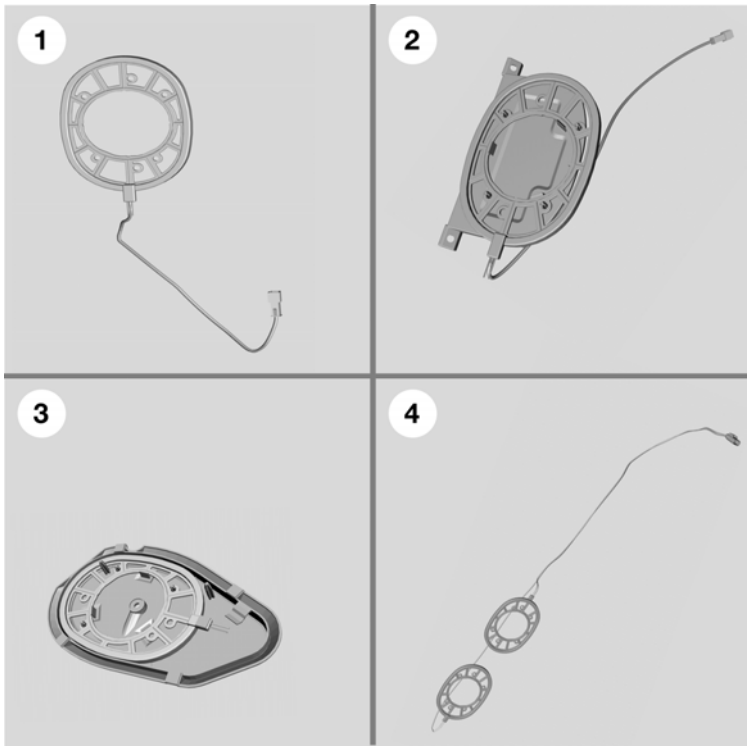

Index	Explanation
1	Antenna in each Footwell
2	Antenna in Rear Parcel Shelf
3	Antenna in Trunk
4	Antenna Attached to Rear Bumper Cover

Footwell Antenna Location

The antennas are embedded in the insulating material located beneath the carpet.

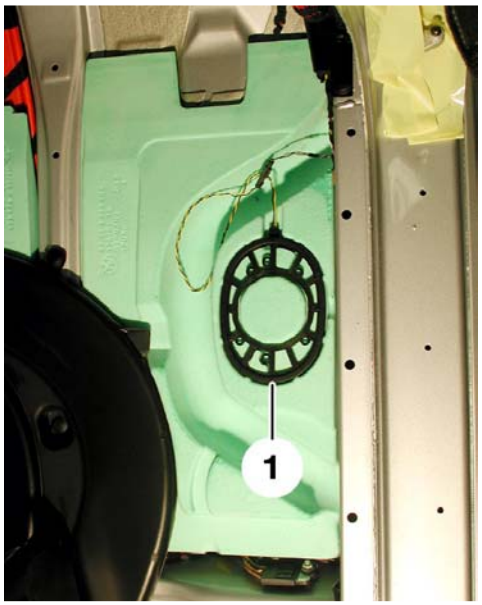

Index	Explanation
1	Right Front Footwell
2	Left Front Footwell

cardiagn.com

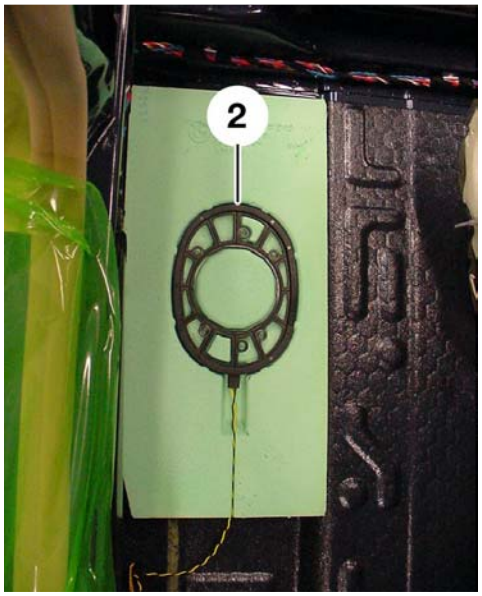

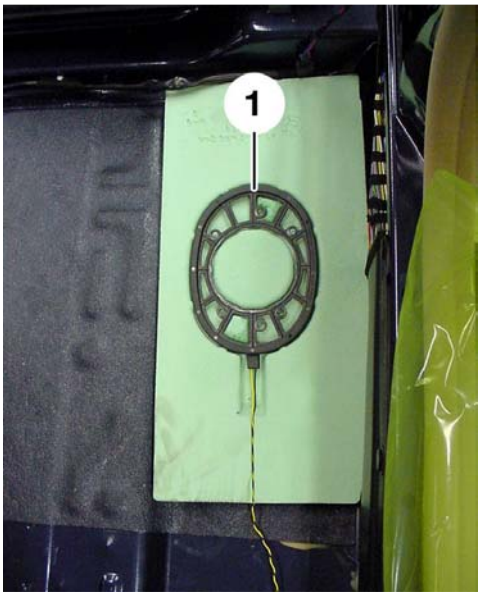

Index	Explanation
1	Right Rear Footwell
2	Left Rear Footwell

Rear Parcel Shelf Antenna Location

The antenna is installed at angle in a holder and secured to the front edge of the rear parcel shelf

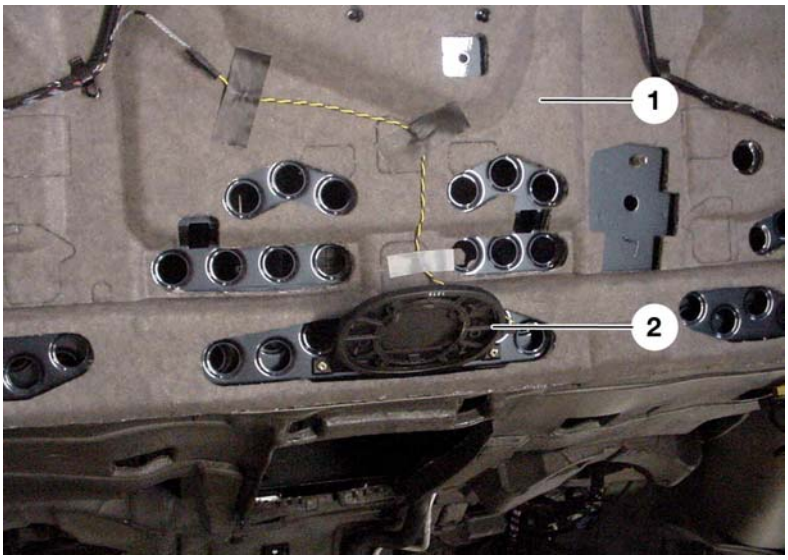

Index	Explanation
1	Rear Parcel Shelf
2	Antenna

cardiagn.com

Trunk Antenna Location

The antenna in the trunk is clipped into a housing and secured underneath the rear parcel shelf.

Index	Explanation
1	Antenna below Rear Parcel Shelf

Bumper Antenna Location

Two antennas are installed on the inside of the rear bumper cover.

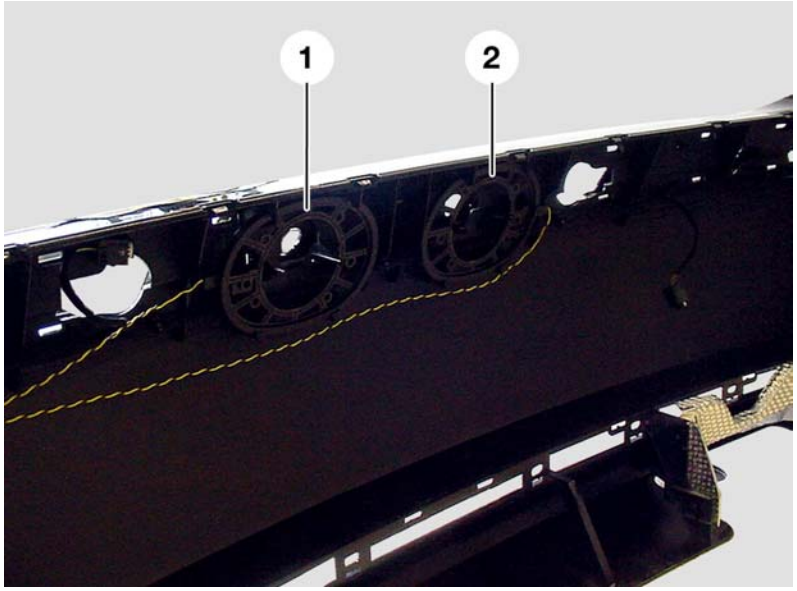

Index	Explanation
1	Right Rear Bumper Antenna
2	Left Rear Bumper Antenna

cardiagn.com

ID Transmitter/Remote Control

The ID transmitter contains the following functions:

- Incorporates the normal remote control buttons
- Able to receive signal from transmitting vehicle antennas
- Signal encryption
- Transmission of encrypted high frequency information
- Mechanical Keys

Since the key does not need to be inserted into the holder to start the vehicle the battery of the remote control/ID Transmitter is no longer chargeable, therefore requiring the battery to be replaced. Under “average” usage the the battery may need to be replaced once a year.

Index	Explanation
1	Integrated Mechanical Key
2	Battery
3	Battery Cover

cardiagn.com

Miscellaneous Information

Car Wash

If the vehicle is to be taken through a Car Wash the ID transmitter must be inserted into the ‘Key” holder slot of the ignition switch while the engine is running in order to keep the parking gear from engaging automatically.

By inserting the ID transmitter with the engine running and gear engaged the Comfort Access functions are deactivated. If the engine is the switched off via the start/stop button the “N” position is automatically engaged.

CBS Data

At this time the transmission of Condition Based Service (CBS) data to the identification transmitter via the radio interface for the E65 is not possible.

In order to update the CBS data residing in the ID Transmitter, if the Passive Go function is being used (ID Transmitter is not being inserted into the “Key” holder slot on the ignition switch):

- Insert the ID Transmitter into the slot of the ignition switch
- Hold the central-lock rocker switch for approx.10 seconds in the "Unlock" position
- An audible gong will indicate that the key data has been updated

Door-Selective Unlocking

Door unlocking is performed selectively if "selective unlocking" is coded in the key-memory function (otherwise "global unlocking").

To unlock the remaining doors with door-selective unlocking, press the center-lock rocker switch into the "Unlock" position.

Missing ID Transmitter

If the engine is started and the ID transmitter is removed from the passenger compartment of the vehicle as a result of a person leaving the vehicle while in possession of the ID Transmitter (driver change, someone is being dropped-off etc.):

- The engine is not automatically switched-off, as this is not permitted by law
- A Check Control message appears if a door is opened and then closed again
- Once the engine has been switched off, it can be restarted within 10 seconds even if there is no identification transmitter inside the car (i.e. without valid drive authorization). This is important in the event the engine stumbles/stops on a railroad crossing and there is no identification transmitter inside the car.

For safety reasons the owner should carry the wallet key. The wallet key in conjunction with the adapter permits drive authorization; this enables the car to be driven even when the identification transmitter is missing.

cardiagn.com

Component Replacement

Despite being of the same design, the front and rear outside door handles on the passenger side are not interchangeable. Each Electronic Outer Door Handle must be installed in the correct installation location (note part numbers) so that the motor for unlocking the locking pawl (electric opening motor) operates properly.

In addition, each Electronic Outer Door-Handle has a logical bus address.

Diagnosis

Comfort Access Fault Memory

The following possible faults are stored in the fault memory of the Comfort Access Module:

- Overvoltage or undervoltage, terminal 30 (functional limits, Comfort Access)
- Short circuit to positive or open circuit or contact break in relays for all 5 interior antennas, trunk antenna and both bumper mounted antennas
- Faulty relay coil at all relays, sticking relay contact at all relays with antenna outputs
- Faulty output stage
- Excess temperature at output stage
- Faulty K-bus interface
- Sticking Hall sensor (TAGE)
- Faulty capacitive sensor (TAGE)

Fault Memory, Electronic Outer Door-Handle

Faults detected by the Electronic Outer Door-Handle are stored in a non-volatile memory which is able to store a maximum of 16 faults.

The faults are stored in the order in which they occurred.

Flash programming for the Electronic Outer Door-Handle is not planned.

Initialization

For the Comfort Access System, the following components must be initialized after being replaced:

- Comfort Access Module
- Electronic Outer Door Handles

The initialization is triggered by switching ignition to Term R, which results in the CAS transmitting the initialization automatically to the Comfort Access Module. The Comfort Access Module then transmits a signal to the Electronic Outer Door Handles.

Initialization can also be performed via a test module for Comfort Access Initialization.

cardiagn.com

Check Control Messages

There are five Check Control Messages that can be displayed pertaining the the Comfort Access system:

Control unit	Fixed indicator lamp	Variable indicator lamp	Check Control message	Note in control display
CAS		KT-9202	Identification transmitter does not respond!	Identification transmitter not present or malfunctioning, see Owner's Handbook.
CAS		KT-9164	Identification transmitter battery flat!	Replace battery of identification transmitter with integrated key, see Owner's Handbook.
CAS		KT-9114	Identification transmitter!	Comfort access deactivated. AUTO P is not possible with engine OFF. Take identification transmitter with you when exiting car.
CAS		KT-9114	Identification transmitter in car interior!	Double locking of car not possible. Remove identification transmitter from car interior.
CAS		KT-9114	Identification transmitter not present!	Identification transmitter not in vicinity of car, therefore double locking not possible. Carry identification transmitter with you.

cardiagn.com