2 0 0 7
VOLVO
XC70

VOLVO OWNER'S MANUAL XC70

pg. 1 Introduction

Welcome to the world-wide family of Volvo owners. We trust that you will enjoy many years of safe driving in your Volvo, an automobile designed with your safety and comfort in mind. To help ensure your satisfaction with this vehicle, we encourage you to familiarize yourself with the equipment descriptions, operating instructions and maintenance requirements/recommendations in this manual. We also urge you and your passengers to wear seat belts at all times in this (or any other) automobile. And, of course, please do not operate a vehicle if you may be affected by alcohol, medication or any impairment that could hinder your ability to drive.
Your Volvo is designed to meet all applicable safety and emission standards, as evidenced by the certification labels attached to the driver's door opening and on the left wheel housing in the engine compartment.
For further information please contact your retailer, or:

In the USA:
Volvo Cars of North America, LLC
Customer Care Center

P.O. Box 914
Rockleigh, New Jersey 07647-0914
1-800-458-1552
www.volvocars.us

In Canada:
Volvo Cars of Canada Corp.
National Customer Service
175 Gordon Baker Road
North York, Ontario M2H 2N7
1-800-663-8255
www.volvocanada.com

2006 © Volvo Car Corporation

pg. 2 Introduction

General Information

Shiftlock (automatic transmission)
When your vehicle is parked, the gear selector is locked in the (**P**)ark position. To release the selector from this position, turn the ignition key to position II (or start the engine), depress the brake pedal, press the button on the front side of the gear selector and move the selector from (**P**)ark.

Keylock (automatic transmission)
When you switch off the ignition, the gear selector must be in the (**P**)ark position before the key can be removed from the ignition switch.

Anti-lock Brake System (ABS)
The ABS system in your vehicle performs a self-diagnostic test when the vehicle first reaches the speed of approximately 12 mph (20 km/h). The brake pedal will pulsate several times and a sound may be audible from the ABS control module. This is normal.

Fuel filler door
The fuel filler door, located on the right rear fender, is connected to your vehicle's central locking system. Press the button on the light switch panel (see illustration on page 56) when the vehicle is at a standstill to unlock the fuel filler door. Please note that the fuel filler door will remain unlocked until the vehicle begins to move forward. An audible click will be heard when the fuel filler door relocks.

Fuel filler cap
After refueling, close the fuel filler cap by turning it clockwise until it clicks into place. If this cap is not closed tightly or if the engine is running when the vehicle is refueled, the Malfunction Indicator Lamp ("Check Engine" light) will illuminate.

Important information

Before you operate your vehicle for the first time, please familiarize yourself with the information in chapters one, two and eight of this manual.
Information contained in the balance of the manual is extremely useful and should be read after operating the vehicle for the first time.
The manual is structured so that it can be used for reference. For this reason, it should be kept in the vehicle for ready access.
Do not export your Volvo to another country before investigating that country's applicable safety and exhaust emission requirements. In some cases it may be difficult or impossible to comply with these requirements. Modifications to the emission control system(s) may render your Volvo not certifiable for legal operation in the U. S., Canada and other countries.
All information, illustrations and specifications contained in this manual are based on the latest product information available at the time of publication. Please note that some vehicles may be equipped differently, depending on special legal requirements. Optional equipment described in this manual may not be available in all markets. Volvo reserves the right to make model changes at any time, or to change specifications or design without notice and without incurring obligation.

pg. 3 Introduction

General Information

WARNING!

CALIFORNIA Proposition 65 Warning
Engine exhaust, some of its constituents, and certain vehicle components contain or emit chemicals known to the state of California to cause cancer, and birth defects or other reproductive harm. In addition, certain fluids contained in vehicles and certain products of component wear contain or emit chemicals known to the State of California to cause cancer, and birth defects or other reproductive harm.

WARNING!

If your vehicle is involved in an accident, unseen damage may affect your vehicle's driveability and safety.

pg. 4 Introduction

Volvo and the environment

Volvo is committed to the well being of its customers. As a natural part of this commitment, we care about the environment in which we all live. Caring for the environment means an everyday involvement in reducing our environmental impact.
Volvo's environmental activities are based on a holistic view, which means we consider the overall environmental

impact of a product throughout its complete life cycle. In this context, design, production, product use, and recycling are all important considerations. In production, Volvo has partly or completely phased out several chemicals including freons, lead chromates, naphtanates, asbestos, mercury and cadmium; and reduced the amount of chemicals used in our plants 50% since 1991.

Volvo was the first in the world to introduce into production a three-way catalytic converter with a Lambda sond, now called oxygen sensor, in 1976. The current version of this highly efficient system reduces emissions of harmful substances (CO, HC, NOx) from the exhaust pipe by approximately 95% and the search to eliminate the remaining emissions continues. Volvo is the only automobile manufacturer to offer CFC-free retrofit kits for the air conditioning system of all models as far back as the 1975 model 240. Advanced electronic engine controls, refined purification systems and cleaner fuels are bringing us closer to our goal.

After Volvo vehicles and parts have fulfilled their use, recycling is the next critical step in completing the life cycle. The metal content is about 75% of the total weight of a vehicle, which makes the vehicle among the most recycled industrial products. In order to have efficient and well controlled recycling, many Volvo variants have printed dismantling manuals, indicating the weight and material of individual components. For Volvo, all homogeneous plastic parts weighing more than 1.7 oz. (50 grams) are marked with international symbols that indicate how the component is to be sorted for recycling.

In addition to continuous environmental refinement of conventional gasoline-powered internal combustion engines, Volvo is actively looking at advanced technology alternative-fuel vehicles.

When you drive a Volvo, you become our partner in the work to lessen the vehicle's impact on the environment. To reduce your vehicle's environmental impact, you can:

- Maintain proper air pressure in your tires. Tests have shown decreased fuel economy with improperly inflated tires.
- Follow the recommended maintenance schedule in your Warranty and Service Records Information booklet.
- Drive at a constant speed.
- See an authorized Volvo retailer as soon as possible for inspection if the check engine (malfunction indicator) lamp illuminates, or stays on after the vehicle has started.
- Properly dispose of any vehicle-related waste such as used motor oil, used batteries, brake pads, etc.
- When cleaning your vehicle, use Volvo's own vehicle care products, all of which have systematically been adapted to the environment.

PremAir® (certain models only)

The surface of the radiator in the engine compartment[1] is treated with a special coating called PremAir[2]. This coating works as a catalytic converter, converting most of the ground level ozone passing through the

1. Only vehicles with engine B5244S (engine code 39 in the VIN)
2. PremAir is a registered trademark of Engelhard Corporation.

pg. 5 Introduction

Volvo and the environment

radiator into oxygen, thereby reducing harmful ground-level ozone.

NOTE: If a PremAir-coated radiator needs to be replaced, it should be replaced with another radiator with this

coating. If this is not done, the Malfunction Indicator Light (see page 48) will illuminate.

pg. 6 Introduction

Important warnings

Accessory Installation

- We strongly recommend that Volvo owners install only genuine, Volvo-approved accessories, and that accessory installations be performed only by the factory-trained technicians at your authorized Volvo retailer.
- Genuine Volvo accessories are tested to ensure compatibility with the performance, safety, and emission systems in your vehicle. Additionally, your authorized Volvo retailer knows where accessories may and may not be safely installed in your Volvo. In all cases, please consult your authorized Volvo retailer before installing any accessory in or on your vehicle.
- Accessories that have not been approved by Volvo may or may not be specifically tested for compatibility with your vehicle. Additionally, an inexperienced installer may not be familiar with some of your vehicle's systems.
- Any of your vehicle's performance and safety systems could be adversely affected if you install accessories that Volvo has not tested, or if you allow accessories to be installed by someone unfamiliar with your vehicle.
- Damage caused by unapproved or improperly installed accessories may not be covered by your new vehicle warranty. See your Warranty and Service Records Information booklet for more warranty information. Volvo assumes no responsibility for death, injury, or expenses that may result from the installation of non-genuine accessories.

Driver Distraction

- Driver distraction results from driver activities that are not directly related to controlling the vehicle in the driving environment. Your new Volvo is, or can be, equipped with many feature-rich entertainment and communication systems. These include hands-free cellular telephones, navigation systems, and multipurpose audio systems. You may also own other portable electronic devices for your own convenience. When used properly and safely, they enrich the driving experience. Improperly used, any of these could cause a distraction.
- For all of these systems, we want to provide the following warning that reflects the strong Volvo concern for your safety:
- Never use these devices or any feature of your vehicle in a way that distracts you from the task of driving safely. Distraction can lead to a serious accident.In addition to this general warning, we offer the following guidance regarding specific newer features that may be found in your vehicle:
- Never use a hand-held cellular telephone while driving. Some jurisdictions prohibit cellular telephone use by a driver while the vehicle is moving.
- If your vehicle is equipped with a navigation system, set and make changes to your travel itinerary only with the vehicle parked.
- Never program your audio system while the vehicle is moving. Program radio presets with the vehicle parked, and use your programmed presets to make radio use quicker and simpler.
- Never use portable computers or personal digital assistants while the vehicle is moving.

A driver has a responsibility to do everything possible to ensure his or her own safety and the safety of passengers in the vehicle and others sharing the roadway. Avoiding distractions is part of that responsibility.

pg. 7 Introduction

Contents

Safety

Instruments and controls

Climate control

Interior

Locks and alarm

Starting and driving

Wheels and tires

Vehicle care

Maintenance and service

Specifications

Audio

Index

pg. 8 Introduction

This page left intentionally blank.

Contents | Top of Page

2 0 0 7
VOLVO
XC70

Safety

pg. 9 Safety

Occupant safety, Reporting safety defects	10
Seat belts	12
Supplemental Restraint System (SRS)	15
Front airbags	16
Occupant Weight Sensor (OWS)	20
Side impact (SIPS) airbag	24
Volvo Inflatable Curtain (VIC)	25
Whiplash Protection System (WHIPS)	26
Child safety	28
Infant seats	33
Convertible seats	35
Booster cushions	37
ISOFIX lower anchors	38
Top tether anchors	39
Integrated booster cushion	40

pg. 10 Safety

Occupant safety, Reporting safety defects

Volvo concern for safety

Safety is the Volvo cornerstone. Our concern dates back to 1927 when the first Volvo rolled off the production line. Three-point seat belts (a Volvo invention), safety cages, and energy-absorbing impact

zones were designed into Volvo vehicles long before it was fashionable or required by government regulation. We will not compromise our commitment to safety. We continue to seek out new safety features and to refine those already in our vehicles. You can help. We would appreciate hearing your suggestions about improving automobile safety. We also want to know if you ever have a safety concern with your vehicle. Call us in the U.S. at: 800-458-1552 or in Canada at: 800-663- 8255.

Occupant safety
How safely you drive doesn't depend on how old you are but rather on:

- How well you see.
- Your ability to concentrate.
- How quickly you make decisions under stress to avoid an accident.

The tips listed below are suggestions to help you cope with the ever changing traffic environment.
- Never drink and drive.
- If you are taking any medication, consult your physician about its potential effects on your driving abilities.
- Take a driver-retraining course.
- Have your eyes checked regularly.
- Keep your windshield and headlights clean.
- Replace wiper blades when they start to leave streaks.
- Take into account the traffic, road, and weather conditions, particularly with regard to stopping distance.

Reporting safety defects in the U.S.
If you believe that your vehicle has a defect which could cause a crash or could cause injury or death, you should immediately inform the National Highway Traffic Safety Administration (NHTSA) in addition to notifying Volvo Cars of North America, LLC. If NHTSA receives similar complaints, it may open an investigation, and if it finds that a safety defect exists in a group of vehicles, it may order a recall and remedy campaign. However, NHTSA cannot become involved in individual problems between you, your retailer, or Volvo Cars of North America, LLC. To contact NHTSA, you may either call the Auto Safety Hotline toll-free at 1-888-327-4236
(TTY: 1-800-424-9153) or write to:
NHTSA, U.S. Department of Transportation,
Washington D.C. 20590.

You can also obtain other information about motor vehicle safety from:
http://www.safecar.gov

Volvo strongly recommends that if your vehicle is covered under a service campaign, safety or emission recall or similar action, it should be completed as soon as possible. Please check with your local retailer or Volvo Cars of North America, LLC if your vehicle is covered under these conditions.

NHTSA can be reached at:
Internet: http://www.nhtsa.gov
Telephone: 1-888-DASH-2-DOT (1-888-327-4236).

pg. 11 Safety

Occupant safety, Reporting safety defects

Reporting safety defects in Canada
If you believe your vehicle has a defect that could cause a crash or could cause injury or death, you should immediately inform Transport Canada in addition to notifying Volvo Cars of Canada Corp.

To contact Transport Canada, call (800) 333-0510, or (613) 993-9851 if you are calling from the Ottawa region.

pg. 12 Safety

Seat belts

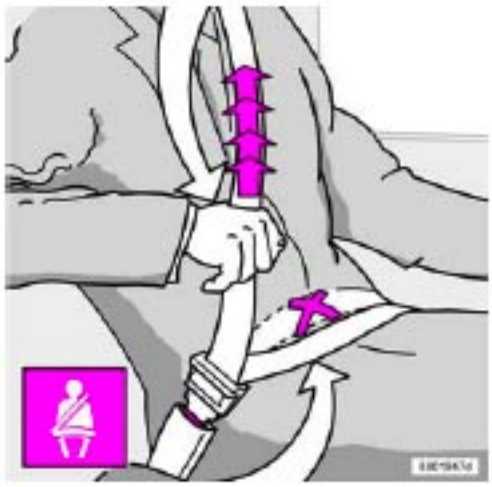

Using seat belts
Volvo, the inventor of the three-point seat belt, urges you and all occupants of your vehicle to wear seat belts and ensure that children are properly restrained, using an infant, car, or booster seat determined by age, weight and height.
Volvo also believes no child should sit in the front seat of a vehicle.
Most states and provinces make it mandatory for occupants of a vehicle to use seat belts.

Seat belt tensioners

The seat belts are equipped with tensioners that reduce slack in the belts. These tensioners are triggered in situations where the airbags deploy. The front seat belts also include a tension reducing device which, in the event of a collision, limits the peak forces exerted by the seat belt on the occupant.

Buckling a seat belt
Pull the belt out far enough to insert the latch plate into the receptacle until a distinct click is heard. The seat belt retractor is normally "unlocked" and you can move freely, provided that the shoulder belt is not pulled out too far.

The retractor will lock up as follows:
- if the belt is pulled out rapidly
- during braking and acceleration
- if the vehicle is leaning excessively
- when driving in turns

When wearing the seat belt remember:
- The belt should not be twisted or turned.
- The lap section of the belt must be positioned low on the hips (not pressing against the abdomen).
- Make sure that the shoulder belt is rolled up into its retractor and that the shoulder and lap belts are taut.

Unbuckling the seat belt
To remove the seat belt, press the red section on the seat belt receptacle. Before exiting the vehicle, check that the seat belt retracts fully after being unbuckled. If necessary, guide the belt back into the retractor slot.

Seat belt reminder
The seat belt reminder consists of an audible signal, an indicator light above the rearview mirror, and a symbol in the instrument panel that alert the driver and front seat passenger if their seat belts are not fastened.

pg. 13 Safety

Seat belts

Seat belt use during pregnancy

The seat belt should always be worn during pregnancy. But it is crucial that it be worn in the correct way. The diagonal section should wrap over the shoulder then be routed between the breasts and to the side of the belly. The lap section should lay flat over the thighs and as low as possible under the belly. It must never be allowed to ride upward. Remove all slack from the belt and insure that it fits close to the body without any twists.

As a pregnancy progresses, pregnant drivers should adjust their seats and steering wheel such that they can easily maintain control of the vehicle as they drive (which means they must be able to easily operate the foot pedals and steering wheel). Within this context, they should strive to position the seat with as large a distance as possible between their belly and the steering wheel.

Child seats

Please refer to page 31 for information on securing child seats with the seat belts.

Sample label found on all seat belts with tensioners

Seat belt maintenance

Check periodically that the seat belts are in good condition. Use water and a mild detergent for cleaning. Check seat belt mechanism function as follows: attach the seat belt and pull rapidly on the strap.

pg. 14 Safety

Seat belts

WARNING!

- Never use a seat belt for more than one occupant.
- Never wear the shoulder portion of the belt under the arm, behind the back or otherwise out of position. Such use could cause injury in the event of an accident.
- Seat belts lose much of their strength when exposed to violent stretching and should be replaced after any collision, even if they appear to be undamaged.
- Never repair the belt yourself; have this work done by an authorized Volvo service technician only.
- Any device used to induce slack into the shoulder belt portion of the three-point belt system will have a detrimental effect on the amount of protection available to you in the event of a collision.
- The seat back should not be tilted too far back. The shoulder belt must be taut in order to function properly.
- Do not use child safety seats or child booster cushions/backrests in the front passenger's seat. We also recommend that children who have outgrown these devices sit in the rear seat with the seat belt properly fastened.

pg. 15 Safety

Supplemental Restraint System (SRS)

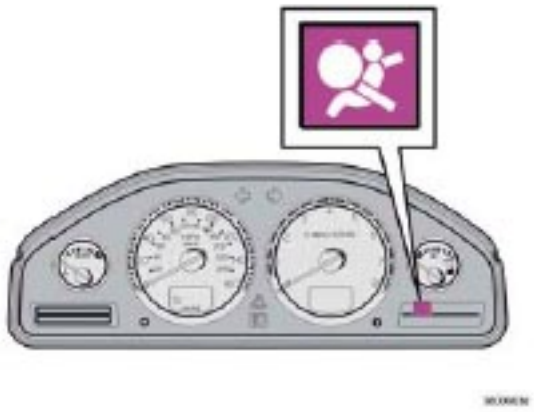

Supplemental Restraint System
As an enhancement to the three-point seat belts, your Volvo is equipped with a Supplemental Restraint System (SRS). Volvo's SRS consists of seat belt tensioners, front airbags, side impact airbags, the

occupant weight sensor, and inflatable curtains. All of these systems are monitored by the SRS control module. An SRS warning light in the instrument panel (see the illustration above) illuminates when the ignition key is turned to position I, II, or III, and will normally go out after approximately 7 seconds if no faults are detected in the system.
Where applicable, a text message will also be displayed when the SRS warning light illuminates. If this warning symbol is not functioning properly, the general warning symbol ⚠ illuminates and a text message will be displayed.

⚠WARNING!

- If the SRS warning light stays on after the engine has started or if it illuminates while you are driving, have the vehicle inspected by a trained and qualified Volvo service technician as soon as possible.
- Never try to repair any component or part of the SRS yourself. Any interference in the system could cause malfunction and serious injury. All work on these systems should be performed by an authorized Volvo service technician.

⚠WARNING!

If your vehicle has been subjected to flood conditions (e.g. soaked carpeting/ standing water on the floor of the vehicle) or if your vehicle has become flood-damaged in any way, do not attempt to start the vehicle or put the key in the ignition before disconnecting the battery (see below). This may cause airbag deployment which could result in personal injury. Have the vehicle towed to a trained and qualified Volvo service technician for repairs.

Automatic transmission:
Before attempting to tow the vehicle, use the following procedure to override the shiftlock system to move the gear selector to the neutral position:

- Switch off the ignition for at least 10 minutes and disconnect the battery.
- Wait at least one minute.
- Insert the key in the ignition and turn it to position II.
- Press firmly on the brake pedal.
- Move the gear selector from (P)ark to the (N)eutral position.

pg. 16 Safety

Front airbags

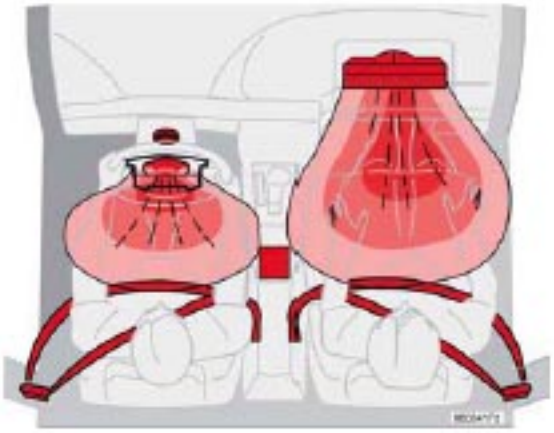

The front airbag system

The front airbags supplement the three-point seat belts. For these airbags to provide the protection intended, seat belts must be worn at all times.

The front airbag system includes gas generators and the airbags. A deceleration sensor activates the gas generators, causing the airbags to be inflated with nitrogen gas.

As the movement of the seats' occupants compresses the airbags, some of the gas is expelled at a controlled rate to provide better cushioning. Both seat belt tensioners also

Passenger's side airbag–above glove compartment

deploy, minimizing seat belt slack. The entire process, including inflation and deflation of the airbags, takes approximately one fifth of a second.

The location of the front airbags is indicated by "SRS AIRBAG" embossed on the steering wheel pad and above the glove compartment, and by decals on both sun visors and on the front and far right side of the dash.

- The driver's side front airbag is folded and located in the steering wheel hub.
- The passenger's side front airbag is folded behind a panel located above the glove compartment.

WARNING!

- The airbags in the vehicle are designed to be a SUPPLEMENT to-not a replacement for-the three-point seat belts. For maximum protection, wear seat belts at all times. Be aware that no system can prevent all possible injuries that may occur in an accident.
- Never drive a vehicle with a steering wheel-mounted airbag with your hands on the steering wheel pad/airbag housing.
- The front airbags are designed to help prevent serious injury. Deployment occurs very quickly and with considerable force. During normal deployment and depending on variables such as seating position, one may experience abrasions, bruises, swellings, or other injuries as a result from deployment of one or both of the airbags.
- When installing any accessory equipment, make sure that the front airbag system is not damaged. Any interference in the system could cause malfunction.

pg. 17 Safety

Front airbags

Front airbag deployment

- The front airbags are designed to deploy during certain frontal or front-angular collisions, impacts, or decelerations, depending on the crash severity, angle, speed and object impacted. The airbags may also deploy in certain non-frontal collisions where rapid deceleration occurs.
- The SRS sensors, which trigger the front airbags, are designed to react to both the impact of the collision and the inertial forces generated by it, and to determine if the intensity of the collision is sufficient for the seat belt tensioners and/or airbags to be deployed.

However, not all frontal collisions activate the front airbags.

- If the collision involves a nonrigid object (e.g., a snow drift or bush), or a rigid, fixed object at a low speed, the front airbags will not necessarily deploy.
- Front airbags do not normally deploy in a side impact collision, in a collision from the rear or in a rollover situation.
- The amount of damage to the bodywork does not reliably indicate if the airbags should have deployed or not.

NOTE:

- Deployment of front airbags occurs only one time during an accident. In a collision where deployment occurs, the airbags and seat belt tensioners activate. Some noise occurs and a small amount of powder is released. The release of the powder may appear as smoke-like matter. This is a normal characteristic and does not indicate fire.
- Volvo's dual-threshold, dual-stage airbags use special sensors to control deployment. The point at

which the airbag deploys is determined by whether or not the seat belt is being used, as well as the severity of the collision.

- Collisions can occur where only one of the airbags deploys. If the impact is less severe, but severe enough to present a clear injury risk, the dual-stage airbags are triggered at 70-80% of their total capacity. If the impact is more severe, the dual-stage airbags are triggered at full capacity.

Should you have questions about any component in the SRS system, please contact a trained and qualified Volvo service technician or Volvo Customer Support:

In the USA
Volvo Cars of North America, LLC
Customer Care Center
P.O. Box 914
Rockleigh, New Jersey 07647-0914
1-800-458-1552
www.volvocars.us

In Canada
Volvo Cars of Canada Corp.
National Customer Service
175 Gordon Baker Road
North York, Ontario M2H 2N7
1-800-663-8255
www.volvocanada.com

pg. 18 Safety

Front airbags

WARNING!

- Do not use child safety seats or child booster cushions/backrests in the front passenger's seat. We also recommend that occupants under 4 feet 7 inches (140 cm) in height who have outgrown these devices sit in the rear seat with the seat belt fastened[1].
- Never drive with the airbags deployed. The fact that they hang out can impair the steering of your vehicle. Other safety systems can also be damaged.
- The smoke and dust formed when the airbags are deployed can cause skin and eye irritation in the event of prolonged exposure.

1. See also the Occupant Weight Sensor information on page 20.

Airbag decal on outside of both sun visors

Airbag decal on the passenger's dashboard

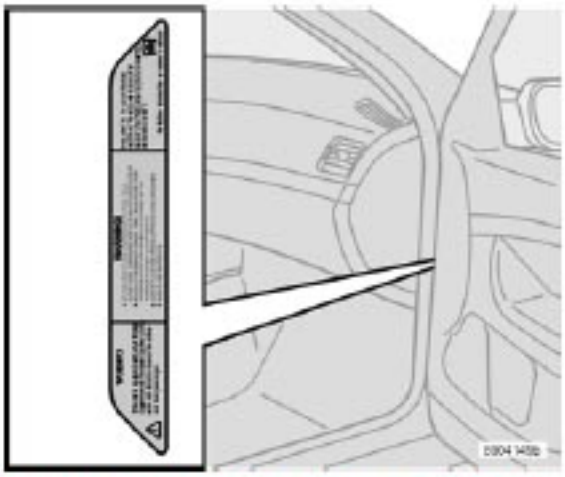

Airbag decal in the front passenger's door opening

pg. 19 Safety

Front airbags

WARNING!

- Children must never be allowed in the front passenger's seat. Volvo recommends that ALL occupants (adults and children) shorter than 4 feet 7 inches (140 cm) be seated in the back seat of any vehicle with a passenger-side front airbag. See page 30 for guidelines.
- Occupants in the front passenger's seat must never sit on the edge of the seat, sit leaning toward the instrument panel or otherwise sit out of position.
- The occupant's back must be as upright as comfort allows and be against the seat back with the seat belt properly fastened.
- Feet must be on the floor, e.g., not on the dash, seat or out of the window.

WARNING!

- No objects or accessory equipment, e.g. dashboard covers, may be placed on, attached to, or installed near the air bag hatch (the area above the glove compartment) or the area affected by airbag deployment (see the illustration on page 16).
- There should be no loose articles, e.g. coffee cups, on the floor, seat, or dashboard area.
- Never try to open the airbag cover on the steering wheel or the passenger's side dashboard. This should only be done by a trained and qualified Volvo service technician.

Failure to follow these instructions can result in injury to the vehicle occupants.

pg. 20 Safety

Occupant Weight Sensor (OWS)

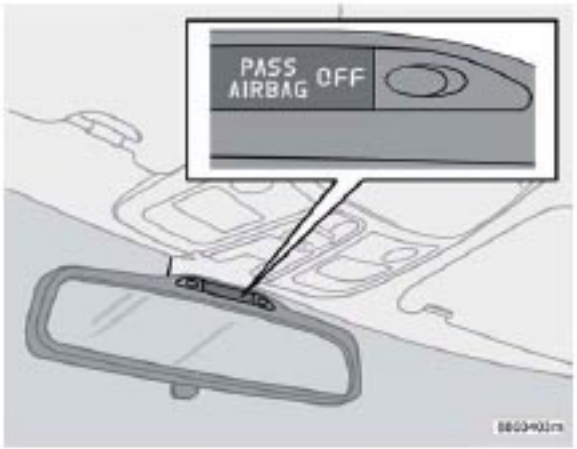

Occupant Weight Sensor (OWS) indicator light

Disabling the passenger's side front airbag

Volvo recommends that ALL occupants (adults and children) shorter than 4 feet 7 inches (140 cm) be seated in the rear seat of any vehicle with a passenger's side front airbag, and be properly restrained. Children should always be seated in child restraints appropriate for their size and weight. See also the child safety recommendations beginning on page 30.

The Occupant Weight Sensor (OWS) is designed to meet the regulatory requirements of Federal Motor Vehicle Safety Standard (FMVSS) 208 and is designed to disable (will not inflate) the passenger's side front airbag under certain conditions.

The OWS works with sensors that are part of the front passenger's seat and seat belt. The sensors are designed to detect the presence of a properly seated occupant and determine if the passenger's side front

airbag should be enabled (may inflate) or disabled (will not inflate).
The OWS will disable (will not inflate) the passenger's side front airbag when:
- the front passenger's seat is unoccupied, or has small/medium objects in the front seat,
- the system determines that an infant is present in a rear-facing infant seat that is installed according to the manufacturer's instructions,
- the system determines that a small child is present in a forward-facing child restraint that is installed according to the manufacturer's instructions,
- the system determines that a small child is present in a booster seat,
- a front passenger takes his/her weight off of the seat for a period of time,
- a child or a small person occupies the front passenger's seat.

The OWS uses a PASSENGER AIRBAG OFF indicator lamp which will illuminate and stay on to remind you that the passenger's side front airbag is disabled. The PASSENGER AIRBAG OFF indicator lamp is located in the overhead console, near the base of the rearview mirror.

NOTE: The PASSENGER AIRBAG OFF indicator lamp will illuminate for a short period of time when the ignition is turned on to confirm it is functional. When the front passenger's seat is not occupied (empty seat) or in the event that the passenger's side front airbag is enabled (may inflate), the PASSENGER AIRBAG OFF indicator lamp will be off.

However, if a fault is detected in the system:
- The OWS indicator light will stay on.
- The SRS warning light (see page 15) will come on and stay on.

The message PASS. AIRBAG OFF SERVICE URGENT will be displayed in the information display.

pg. 21 Safety

Occupant Weight Sensor (OWS)

WARNING!

If a fault in the system is detected and indicated as explained on the previous page, be aware that the passenger's side front airbag will not deploy in the event of a collision.
In this case, the safety systems and Occupant Weight Sensor should be inspected by an authorized Volvo retailer as soon as possible.

WARNING!

- Never try to open, remove, or repair any components in the OWS system. This could result in system malfunction. Maintenance or repairs should only be carried out by an authorized Volvo service technician.
- The front passenger's seat should not be modified in any way. This could reduce pressure on the seat cushion, which might interfere with the OWS system's function.

The OWS is designed to disable (will not inflate) the passenger's side front airbag when a rear facing infant seat, a forward-facing child restraint, or a booster seat is detected. The PASSENGER AIRBAG OFF indicator lamp will illuminate and stay on to remind you that the passenger's side front airbag is disabled (see the following table).

Passenger's Seat occupancy status	OWS Indicator light status	Passenger's side front airbag status
Seat unoccupied	OWS indicator light PASS AIRBAG OFF is not lit	Passenger's side front airbag **disabled**
Seat occupied by low weight occupant/ object[1]	OWS indicator light PASS AIRBAG OFF lights up	Passenger's side front airbag **disabled**
Seat occupied by heavy occupant/ object	OWS indicator light PASS AIRBAG OFF is not lit	Passenger's side front airbag **enabled**

1. Volvo recommends that children always be properly restrained in appropriate child restraints in the rear seats. In rare situations when the seat belt is not properly fastened, some child restraints may not be detected by the OWS because there is very little weight on the vehicle seat cushion. In these cases the passenger's side front airbag may be disabled, but the PASSENGER AIRBAG OFF indicator lamp will not be lit. Do not assume that the passenger's side front airbag is disabled unless the PASSENGER AIRBAG OFF indicator lamp is lit. Make sure the child restraint is properly installed (turn the vehicle off, remove the child restraint from the vehicle and reinstall the restraint following the child restraint manufacturer's instructions) and that the PASSENGER AIRBAG OFF indicator lamp is on, or move the child restraint to the rear seat.

The OWS is designed to enable (may inflate) the passenger's side front airbag anytime the system senses that a person of adult size is sitting properly in the front passenger's seat. The PASSENGER AIRBAG

OFF indicator lamp will be off and remain off.
If a person of adult size is sitting in the front passenger's seat, but the PASSENGER AIRBAG OFF indicator lamp is on, it is possible that the person isn't sitting properly in the seat. If this happens:

- Turn the vehicle off and ask the person to place the seatback in an upright position.

pg. 22 Safety

Occupant Weight Sensor (OWS)

- Have the person sit upright in the seat, centered on the seat cushion, with the person's legs comfortably extended.
- Restart the vehicle and have the person remain in this position for about two minutes. This will allow the system to detect that person and enable the passenger's frontal airbag.
- If the PASSENGER AIRBAG OFF indicator lamp remains on even after this, the person should be advised to ride in the rear seat.

This condition reflects limitations of the OWS classification capability. It does not indicate OWS malfunction.

Modifications
If you are considering modifying your vehicle in any way to accommodate a disability, for example by altering or adapting the driver's or front passenger's seat(s) and/or airbag systems, please contact Volvo at:

In the USA
Volvo Cars of North America, LLC
Customer Care Center
P.O. Box 914
Rockleigh, New Jersey 07647-0914
1-800-458-1552

In Canada
Volvo Cars of Canada Corp.
National Customer Service
175 Gordon Baker Road
North York, Ontario M2H 2N7
1-800-663-8255

WARNING!

- No objects that add to the total weight on the seat should be placed on the front passenger's seat. If a child is seated in the front passenger's seat with any additional weight, this extra weight could cause the OWS system to enable the airbag, which might cause it to deploy in the event of a collision, thereby injuring the child.
- The seat belt should never be wrapped around an object on the front passenger's seat. This could interfere with the OWS system's function.
- The front passenger's seat belt should never be used in a way that exerts more pressure on the passenger than normal. This could increase the pressure exerted on the weight sensor by a child, and could result in the airbag being enabled, which might cause it to deploy in the event of a collision, thereby injuring the child.

pg. 23 Safety

Occupant Weight Sensor (OWS)

WARNING!

Keep the following points in mind with respect to the OWS system. Failure to follow these instructions could adversely affect the system's function and result in serious injury to the occupant of the front passenger's seat:

- The full weight of the front seat passenger should always be on the seat cushion. The passenger should never lift him/herself off the seat cushion using the armrest in the door or the center console, by pressing the feet on the floor, by sitting on the edge of the seat cushion, or by pressing against the backrest in a way that reduces pressure on the seat cushion. This could cause OWS to disable the front passenger's side airbag.
- Do not place any type of object on the front passenger's seat in such a way that jamming, pressing, or squeezing occurs between the object and the front seat, other than as a direct result of the correct use of the ALR/ELR seat belt (see page 30).
- No objects should be placed under the front passenger's seat. This could interfere with the OWS system's function.

pg. 24 Safety

Side impact (SIPS) airbag

Location of the side impact (SIPS) airbag

Side impact airbags - front seats only

As an enhancement to the structural side impact protection built into your vehicle, the vehicle is also equipped with Side Impact Protection System (SIPS) airbags.

The SIPS airbag system is designed to help increase occupant protection in the event of certain side impact collisions. The SIPS airbags are designed to deploy only during certain side-impact collisions, depending on the crash severity, angle, speed and point of impact.

NOTE: SIPS airbag deployment (one airbag) occurs only on the side of the vehicle affected by the impact. The airbags are not designed to deploy in all side impact situations.

Components in the SIPS airbag system

This SIPS airbag system consists of gas generators and side airbag modules built into the outboard sides of both front seat backrests.

WARNING!

- The SIPS airbag system is a supplement to the structural Side Impact Protection System and the three-point seat belt system. It is not designed to deploy during collisions from the front or rear of the vehicle or in rollover situations.
- The use of seat covers on the front seats may impede SIPS airbag deployment.
- No objects, accessory equipment or stickers may be placed on, attached to or installed near the SIPS airbag system or in the area affected by SIPS airbag deployment.
- Never try to open or repair any components of the SIPS airbag system. This should be done only by a trained and qualified Volvo service technician.
- In order for the SIPS airbag to provide its best protection, both front seat occupants should sit in an upright position with the seat belt properly fastened.
- Failure to follow these instructions can result in injury to the occupants of the vehicle in the event of an accident.

pg. 25 Safety

Volvo Inflatable Curtain (VIC)

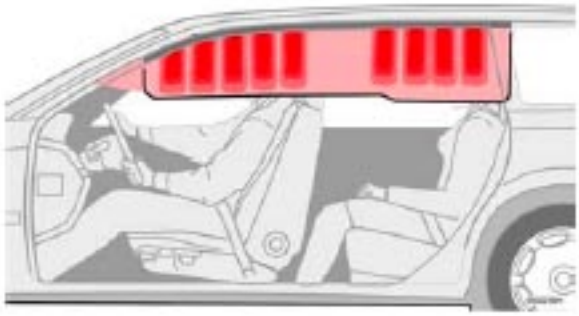

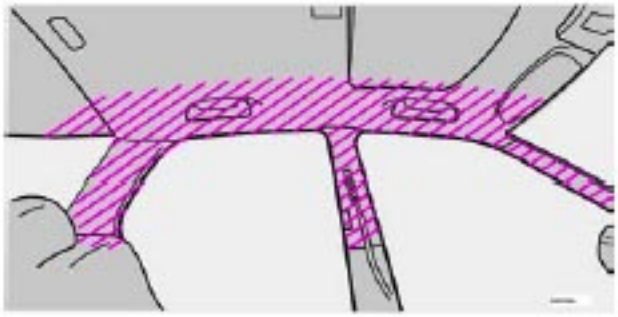

This system consists of inflatable curtains located along the sides of the roof liners, stretching from the center of both front side windows to the rear edge of the rear side door windows. It is designed to help protect the heads of the occupants of the front seats and the occupant of the outboard rear seating positions in certain side impact collisions.
In certain side impacts, both the Inflatable Curtain (VIC) and the Side Impact Airbag System (SIPS-bag) will deploy, whereas, in some cases, only the Inflatable Curtain (VIC) will deploy. In cases where both the VIC and the SIPS-bag deploy, this will occur simultaneously.

NOTE: If the inflatable curtain deploys, it remains inflated for approximately 3 seconds.

WARNING!

- The VIC system is a supplement to the Side Impact Protection System. It is not designed to deploy during collisions from the front or rear of the vehicle or in rollover situations.
- Never try to open or repair any components of the VIC system. This should be done only by a trained and qualified Volvo service technician.

WARNING!

In order for the VIC to provide its best protection, both front seat occupants and both outboard rear seat occupants should sit in an upright position with the seat belt properly fastened; adults using the seat belt and children using the proper child restraint system. Only adults should sit in the front seats. Children must never be allowed in the front passenger seat. See page 30 for guidelines. Failure to follow these instructions can result in injury to the vehicle occupants in an accident.

pg. 26 Safety

Whiplash Protection System (WHIPS)

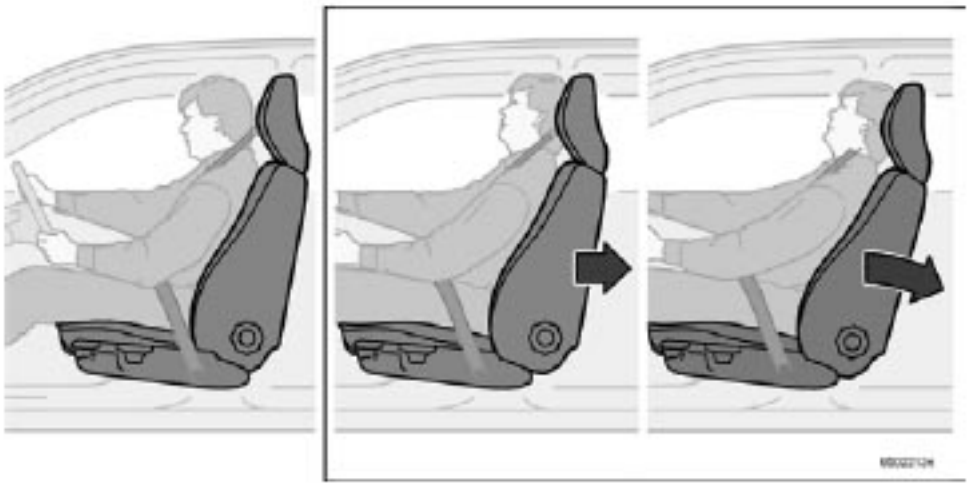

Whiplash Protection System (WHIPS) - front seats only

The WHIPS system consists of specially designed hinges and brackets on the front seat backrests designed to help absorb some of the energy generated in a collision from the rear (when the vehicle is "rear-ended").

In the event of a collision of this type, the hinges and brackets of the front seat backrests are designed to change position slightly to allow the backrest/head restraint to help support the occupant's head before moving slightly rearward. This movement helps absorb some of the forces that could result in whiplash.

WARNING!

- The WHIPS system is designed to supplement the other safety systems in your vehicle. For this system to function properly, the three-point seat belt must be worn. Please be aware that no system can prevent all possible injuries that may occur in an accident.
- The WHIPS system is designed to function in certain collisions from the rear, depending on the crash severity, angle and speed.

WARNING!

Occupants in the front seats must never sit out of position. The occupant's back must be as upright as comfort allows and be against the seat back with the seat belt properly fastened.

pg. 27 Safety

Whiplash Protection System (WHIPS)

WARNING!

- Boxes, suitcases, etc. wedged behind the front seats could impede the function of the WHIPS system.
- If the rear seat backrests are folded down, cargo must be secured to prevent it from sliding forward against the front seat backrests in the event of a collision from the rear. This could interfere with the action of the WHIPS system.
- If your vehicle has been involved in a rear-end collision, the front seat backrests must be inspected by a trained and qualified Volvo service technician, even if the seats appear to be undamaged. Certain components in the WHIPS system may need to be replaced.
- Do not attempt to service any component in the WHIPS system yourself.
- Any contact between the front seat backrests and the folded rear seat could impede the function of the WHIPS system. If the rear seat is folded down, the occupied front seats must be adjusted forward so that they do not touch the folded rear seat.

pg. 28 Safety

Child safety

Children should be seated safely
Volvo recommends the proper use of restraint systems for all occupants including children. Remember that, regardless of age and size, a child should always be properly restrained in a vehicle.

Your vehicle is also equipped with ISOFIX/ LATCH attachments, which make it more convenient to install child seats.

Some restraint systems for children are designed to be secured in the vehicle by lap belts or the lap portion of a lap-shoulder belt. Such child restraint systems can help protect children in vehicles in the event of an accident only if they are used properly. However, children could be endangered in a crash if the child restraints are not properly secured in the vehicle. Failure to follow the installation instructions for your child restraint can result in your child striking the vehicle's interior in a sudden stop.

Holding a child in your arms is NOT a suitable substitute for a child restraint system. In an accident, a child held in a person's arms can be crushed between the vehicle's interior and an unrestrained person. The child could also be injured by striking the interior, or by being ejected from the vehicle during a sudden maneuver or impact. The same can also happen if the infant or child rides unrestrained on the seat. Other occupants should also be properly restrained to help reduce the chance of injuring or increasing the injury of a child.

All states and provinces have legislation governing how and where children should be carried in a

vehicle. Find out the regulations existing in your state or province. Recent accident statistics have shown that children are safer in rear seating positions than front seating positions when properly restrained. A child restraint system can help protect a child in a vehicle. Here's what to look for when selecting a child restraint system:

- It should have a label certifying that it meets applicable Federal Motor Vehicle Safety Standards (FMVSS 213) - or in Canada, CMVSS 213.
- Make sure the child restraint system is approved for the child's height, weight and development - the label required by the standard or regulation, or instructions for infant restraints, typically provide this information.
- In using any child restraint system, we urge you to carefully look over the instructions that are provided with the restraint. Be sure you understand them and can use the device properly and safely in this vehicle. A misused child restraint system can result in increased injuries for both the infant or child and other occupants in the vehicle.

When a child has outgrown the child safety seat, you should use the rear seat with the standard seat belt fastened. The best way to help protect the child here is to place the child on a cushion so that the seat belt is properly located on the hips (see the illustration on page 41). Legislation in your state or province may mandate the use of a child seat or cushion in combination with the seat belt, depending on the child's age and/or size. Please check local regulations.
A specially designed and tested booster cushion (not available in Canada) can be obtained from your Volvo retailer for children weighing 33 - 80 lb. (15 - 36 kg) and 38-54 inches (97 - 137 cm) in height.

pg. 29 Safety

Child safety

WARNING!

- Do not use child safety seats or child booster cushions/backrests in the front passenger's seat. We also recommend that children under 4 feet 7 inches (140 cm) in height who have outgrown these devices sit in the rear seat with the seat belt fastened.
- On hot days, the temperature in the vehicle interior can rise very quickly. Exposure to these high temperatures for even a short period of time can cause heat-related injury or death. Small children are particularly at risk.

pg. 30 Safety

Child safety

Automatic Locking Retractor/ Emergency Locking Retractor
To make child seat installation easier, each seat belt (except for the driver's belt) is equipped with a locking mechanism to help keep the seat belt taut.
When attaching the seat belt to a child seat:
- Attach the seat belt to the child seat according to the child seat manufacturer's instructions.
- Pull the seat belt out as far as possible. - Insert the seat belt latch plate into the buckle (lock) in the usual way.
- Release the seat belt and pull it taut around the child seat.

A sound from the seat belt retractor will be audible at this time and is normal.
The belt will now be locked in place.
This function is automatically disabled when the seat belt is unlocked and the belt is fully retracted.

WARNING!

Do not use child safety seats or child booster cushions/backrests in the front passenger's seat. We also recommend that children who have outgrown these devices sit in the rear seat with the seat belt properly fastened.

Volvo's recommendations
Why does Volvo believe that no child should sit in the front seat of a vehicle? It's quite simple really. A front airbag is a very powerful device designed, by law, to help protect an adult.
Because of the size of the airbag and its speed of inflation, a child should never be placed in the front seat, even if he or she is properly belted or strapped into a child safety seat. Volvo has been an innovator in safety for over seventy-five years, and we'll continue to do our part. But we need your help. Please remember to put your children in the back seat, and buckle them up.

Volvo has some very specific recommendations:
- Always wear your seat belt.
- Airbags are a SUPPLEMENTAL safety device which, when used with a three-point seat belt can help reduce serious injuries during certain types of accidents. Volvo recommends that you do not disconnect the airbag system in your vehicle.
- Volvo strongly recommends that everyone in the vehicle be properly restrained.
- Volvo recommends that ALL occupants (adults and children) shorter than 4 feet 7 inches (140 cm) be seated in the back seat of any vehicle with a front passenger side airbag.

Drive safely!

pg. 31 Safety

Child safety

Infant seat

Child restraints

There are three main types of child restraint systems: infant seats, convertible seats, and booster cushions. They are classified according to the child's age and size.

The following section provides **general information** on securing a child restraint using a three-point seat belt. Refer to pages 39-40 for information on securing a child restraint using ISOFIX lower anchors and/or top tether anchorages.

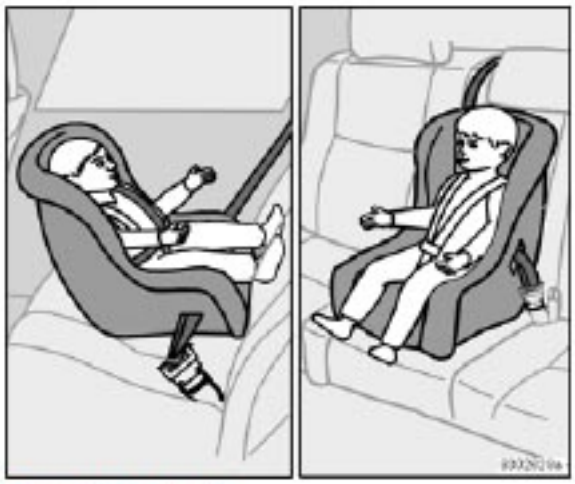

Convertible seat

WARNING!

A child seat should never be used in the front passenger seat of any vehicle with a front passenger airbag - not even if the "Passenger airbag off" symbol near the rear-view mirror is illuminated (on vehicles equipped with Occupant Weight Sensor). If the severity of an accident were to cause the airbag to inflate, this could lead to serious injury or death to a child seated in this position.

Booster cushion

WARNING!

Always refer to the child restraint manufacturer's instructions for detailed information on securing the restraint.

pg. 32 Safety

Child safety

WARNING!

- When not in use, keep the child restraint system secured or remove it from the passenger compartment to help prevent it from injuring passengers in the event of a sudden stop or collision.
- A small child's head represents a considerable part of its total weight and its neck is still very weak. Volvo recommends that children up to age 4 travel, properly restrained, facing rearward. In addition, Volvo recommends that children should ride rearward facing, properly restrained, as long as possible.

pg. 33 Safety

Infant seats

Do not place the infant seat in the front passenger's seat

Securing an infant seat with a seat belt

NOTE: Refer to pages 38-39 for information on securing a child restraint using ISOFIX lower anchors and/or top tether anchorages.

1. Place the infant seat in the rear seat of the vehicle.
2. Attach the seat belt to the infant seat according to the manufacturer's instructions.
3. Fasten the seat belt by inserting the latch plate into the buckle (lock) until a distinct click is audible.

Positioning the seat belt through the infant seat

WARNING!

- An infant seat must be in the rear-facing position only.
- The infant seat should not be positioned behind the driver's seat unless there is adequate space for safe installation.

Fasten the seat belt

WARNING!

A child seat should never be used in the front passenger seat of any vehicle with a front passenger airbag - not even if the "Passenger airbag off" symbol near the rear-view mirror is illuminated (on vehicles equipped with Occupant Weight Sensor). If the severity of an accident were to cause the airbag to inflate, this could lead to serious injury or death to a child seated in this position.

pg. 34 Safety

Infant seats

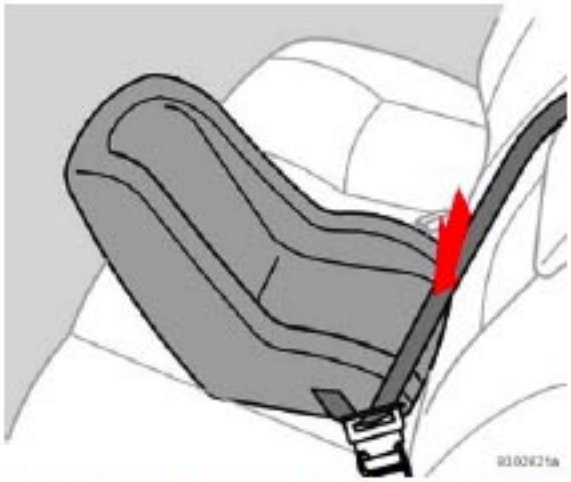

Pull out the shoulder section of the seat belt

4. Pull the shoulder section of the seat belt out as far as possible to activate the belt's automatic locking function.
5. Press the infant seat firmly in place, let the seat belt retract and pull it taut. A sound from the seat belt

retractor's automatic locking function will be audible at this time and is normal. The seat belt should now be locked in place.

NOTE: The locking retractor will automatically release when the seat belt is unbuckled and allowed to retract fully.

Ensure that the seat is securely in place

6. Push and pull the infant seat to ensure that it is held securely in place by the seat belt.

WARNING!

It should not be possible to move the child restraint more than 1 in. (2.5 cm) in any direction.

The infant seat can be removed by unbuckling the seat belt and letting it retract completely.

pg. 35 Safety

Convertible seats

Do not place the convertible seat in the front passenger's seat

Securing a convertible seat with a seat belt

NOTE: Refer to pages 38-39 for information on securing a child restraint using ISOFIX lower anchors and/or top tether anchorages.

Convertible seats can be used in either a forward or rearward-facing position, depending on the age and size of the child.

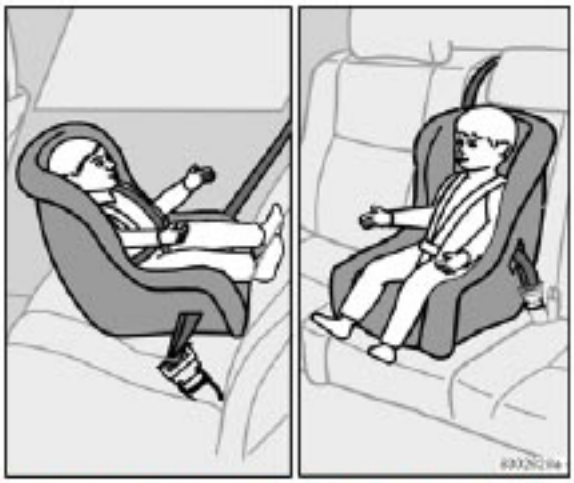

Route the seat belt through the convertible seat

WARNING!

Always use a convertible seat that is suitable for the child's age and size. See the convertible seat manufacturer's recommendations.

1. Place the convertible seat in the rear seat of the vehicle.
2. Attach the seat belt to the convertible seat according to the manufacturer's instructions.

WARNING!

- A small child's head represents a considerable part of its total weight and its neck is still very weak. Volvo recommends that children up to age 4 travel, properly restrained, facing rearward. In addition, Volvo recommends that children should ride rearward facing, properly restrained, as long as possible.
- Convertible child seats should be installed in the rear seat only.
- A rear-facing convertible seat should not be positioned behind the driver's seat unless there is adequate space for safe installation.

pg. 36 Safety

Convertible seats

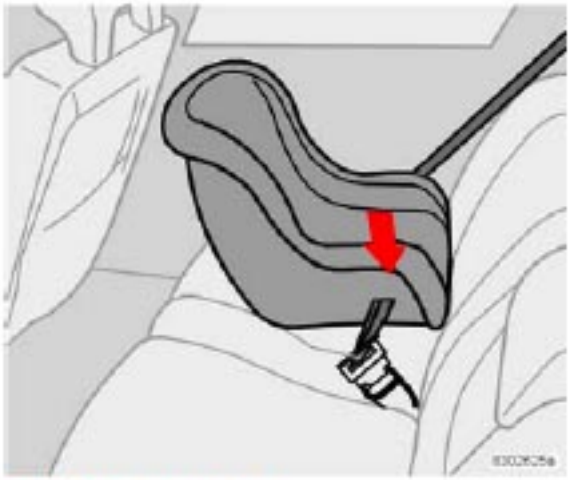

Fasten the seat belt

3. Fasten the seat belt by inserting the latch plate into the buckle (lock) until a distinct click is audible.
4. Pull the shoulder section of the seat belt out as far as possible to activate the belt's automatic locking function.
5. Press the convertible seat firmly in place, let the seat belt retract and pull it taut. A sound from the seat belt retractor's automatic locking function will be audible at this time and is normal. The seat belt should now be locked in place.

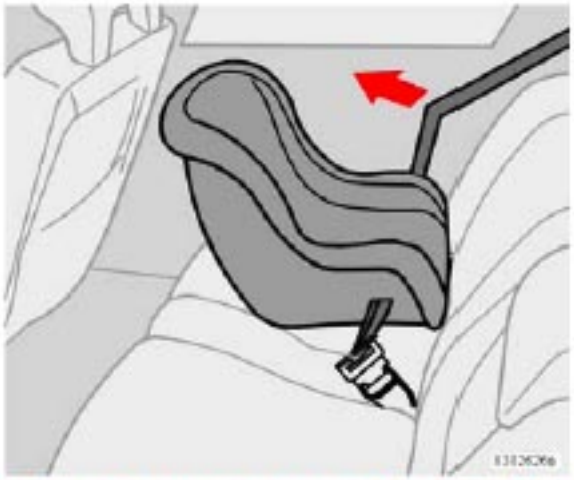

Pull out the shoulder section of the seat belt

NOTE: The locking retractor will automatically release when the seat belt is unbuckled and allowed to retract fully.

6. Push and pull the convertible seat to ensure that it is held securely in place by the seat belt.

WARNING!

It should not be possible to move the child restraint more than 1 in. (2.5 cm) in any direction.

The convertible seat can be removed by unbuckling the seat belt and letting it retract completely.

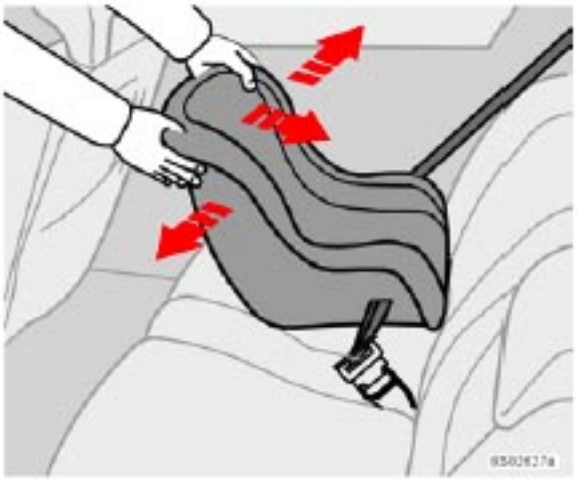

Ensure that the seat is securely in place

WARNING!

A child seat should never be used in the front passenger seat of any vehicle with a front passenger airbag - not even if the "Passenger airbag off" symbol near the rear-view mirror is illuminated (on vehicles equipped with Occupant Weight Sensor). If the severity of an accident were to cause the airbag to inflate, this could lead to serious injury or death to a child seated in this position.

pg. 37 Safety

Booster cushions

Position the child correctly on the booster cushion

Securing a booster cushion

1. Booster cushions are recommended for children who have outgrown convertible seats.
2. Place the booster cushion in the rear seat of the vehicle.
3. With the child properly seated on the booster cushion, attach the seat belt to or around the cushion according to the manufacturer's instructions.

Fasten the seat belt by inserting the latch plate into the buckle (lock) until a distinct click is audible.

Positioning the seat belt

4. Ensure that the seat belt is pulled taut and fits snugly around the child.

WARNING!

- The hip section of the three-point seat belt must fit snugly across the child's hips, not across the stomach.
- The shoulder section of the three-point seat belt should be positioned across the chest and shoulder.
- The shoulder belt must never be placed behind the child's back or under the arm.

pg. 38 Safety

ISOFIX lower anchors

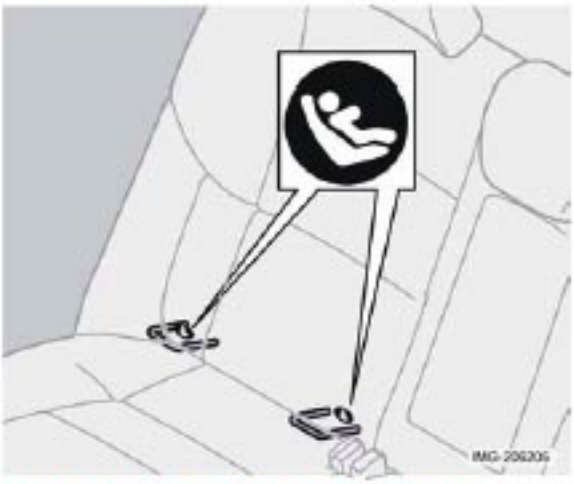

ISOFIX lower child restraint anchors

Using the ISOFIX lower child seat anchors

Lower anchors for ISOFIX-equipped child seats are located in the rear, outboard seats, hidden below the backrest cushions. Symbols on the seat back upholstery mark the anchor positions (see the illustration above).

To access the anchors:
1. Put the child restraint in position.
2. Kneel on the child restraint to press down the seat cushion and locate the anchors by feel.
3. Fasten the attachment on the child restraint's lower straps to the ISOFIX lower anchors.
4. Firmly tension the lower child seat straps according to the manufacturer's instructions.

NOTE:
- The rear seat's center position is not equipped with ISOFIX lower anchors. When installing a child restraint in this position, attach the restraint's top tether strap (if it is so equipped) to the top tether anchorage point (see the information on page 39) and secure the restraint with the vehicle's center seat belt (see the information beginning on page 31).
- Always follow your child seat manufacturer's installation instructions, and use both ISOFIX lower anchors and top tethers whenever possible.

Fasten the attachment correctly to the ISOFIX lower anchors

WARNING!

Be sure to fasten the attachment correctly to the anchor (see the illustration above). If the attachment is not correctly fastened, the child restraint may not be properly secured in the event of a collision.

pg. 39 Safety

Top tether anchors

Top tether anchorage points (route under head restraint)

Top tether anchors
Volvo vehicles are equipped with child restraint top tether anchorages in all rear seat positions.

Using the top tether anchorages
1. Place the child restraint on the rear seat.
2. Route the top tether strap under the head restraint and fasten its attachment to the anchorage.

WARNING!

Be sure to fasten the child tether attachment correctly to the anchor. If it is not correctly fastened, the child seat may not be properly restrained in the event of a collision.

3. Firmly tension the top tether strap according to the child restraint manufacturer's instructions. Tension the top tether strap only after the lower anchor straps or the seat belt have been firmly tensioned.

See page 38 for on securing the child restraint to ISOFIX lower anchors.

NOTE:
- Child restraints could be recalled for safety reasons. You must register your child restraint to be reached in a recall. To stay informed about child safety seat recalls, be sure to fill out and return the registration card that comes with new child restraints.

Child restraint recall information is readily available in both the U.S. and Canada. For recall information in the U.S., call the U.S. Government's Auto Safety Hotline at 1-800- 424-9393. In Canada, visit Transport Canada's Child Safety website at http://www.tc.gc.ca/roadsafety/childsafety/menu.htm.

WARNING!

- Never route a top tether strap over the top or around the head restraint. It should always be routed under the head restraint.
- Child restraint anchorages are designed to withstand only those loads imposed by correctly fitted child restraints. Under no circumstances are they to be used for adult seat belts or harnesses. The anchorages are not able to withstand excessive forces on them in the event of collision if full harness seat belts or adult seat belts are installed to them. An adult who uses a belt anchored in a child restraint anchorage runs a great risk of suffering severe injuries should a collision occur.
- Do not install rear speakers that require the removal of the top tether anchors or interfere with the proper use of the top tether strap.

pg. 40 Safety

Integrated booster cushion

Integrated booster cushion

Integrated booster cushion (option)
Volvo's own integrated booster cushion has been specially designed to help safeguard a child seated in the center position of the rear seat. When using the integrated booster cushion, the child must be secured with the vehicle's three-point seat belt.
Use this booster cushion only with children who weigh between 33 and 80 lbs (15 and 36 kg) and whose height is between 38 and 54 in (97 and 137 cm). In Canada, Transport Canada's weight recommendation is 40-80 lbs (18-36 kg).
The booster cushion is designed to raise the child higher, so that the shoulder strap crosses over the child's collarbone, not over the child's neck. If using a booster cushion does not result in proper positioning of the shoulder strap, then the child should be placed in a properly secured child restraint (see the information beginning on page 31). The shoulder belt must never be placed behind the child's

back or under the arm.

WARNING!

- DEATH or SERIOUS INJURY can occur.
- Follow all instructions on the booster cushion and in the vehicle's owner's manual.
- MAKE SURE THE BOOSTER CUSHION IS SECURELY LOCKED BEFORE THE CHILD IS SEATED.
- Use this booster cushion only with children who weigh between 33 and 80 lbs (15 and 36 kg) and whose height is between 38 and 54 in (97 and 137 cm). In Canada, Transport Canada's weight recommendation is 40-80 lbs (18-36 kg).

WARNING!

In the event of a collision while the integrated booster cushion was occupied, the entire booster cushion and seat belt must be replaced. The booster cushion should also be replaced if it is badly worn or damaged in any way. This work should be performed by an authorized Volvo retailer only.

Canada only: This cushion may be referred to as a built-in booster cushion.

pg. 41 Safety

Integrated booster cushion

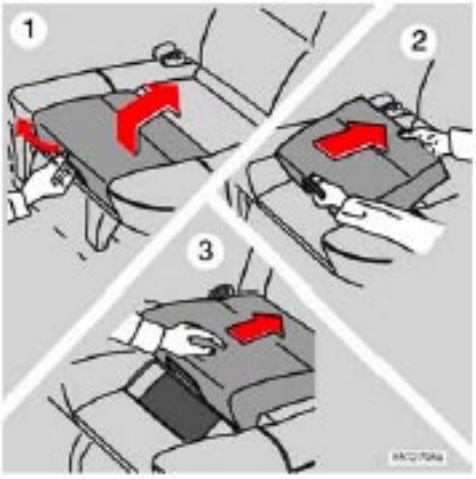

Outboard integrated booster cushions - folding up
- Pull the handle at the front of the cushion forward (1).

- With both hands push the cushion rearward (2).
- Push the cushion until it locks in place (3).

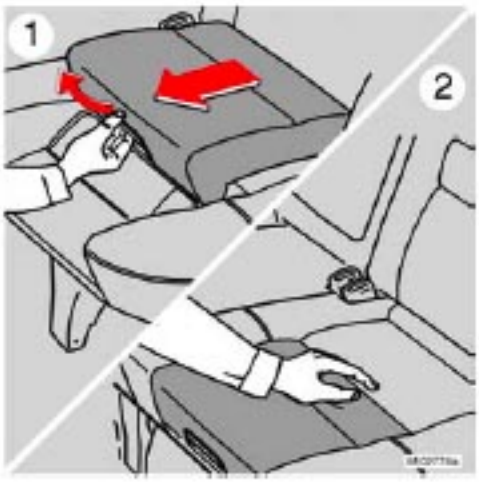

Outboard integrated booster cushions - folding down
- Pull the handle at the front of the cushion forward (1).
- Push the cushion forward/downward (2).

NOTE:
- The booster cushion must be completely lowered before the rear seat backrest can be folded down.
- Please also refer to the instructions on the integrated booster cushion.

pg. 42 Safety

This page left intentionally blank.

Contents | Top of Page

2 0 0 7
VOLVO
XC70

Instruments and controls

pg. 43 Instruments and controls

Instrument overview	44
Instrument panel	46
Indicator and warning symbols	47
Switches in the center console	52
Steering wheel adjustment	54
Lighting panel	55
Left-side steering wheel lever	57
Right-side steering wheel lever	58
Hazard warning flashers, rear window/sideview mirror defroster	60
Trip computer	61
Cruise control	62
Parking brake, auxiliary socket/cigarette lighter	64
Power windows	65
Rearview mirror/sideview mirrors	67
Power moonroof (option)	70

pg. 44 Instruments and controls

Instrument overview

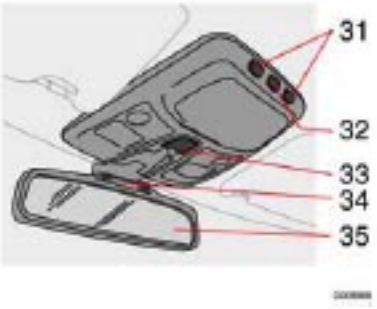

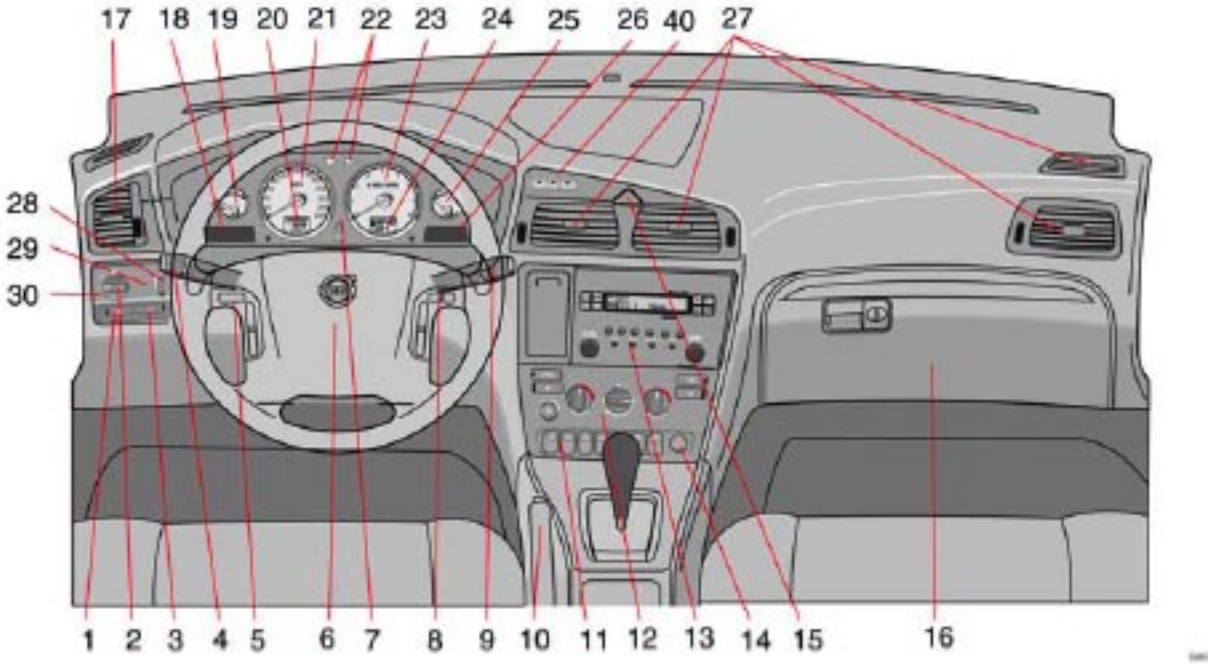

pg. 45 Instruments and controls

Instrument overview

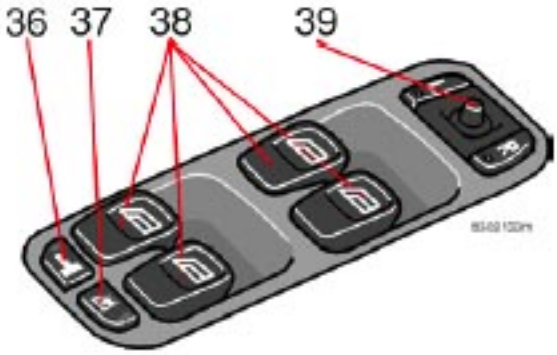

Control panel in the driver's door (controls 36-39)

Page

1. Front fog lights	56
2. Headlights/Parking lights/switch for unlocking fuel filler door	55
3. Rear fog light	55
4. Turn signals/High/low beams	57
5. Cruise control	62
6. Horn	
7. Instrument panel	46
8. Audio controls in steering wheel (option)	232
9. Windshield wipers	58
10. Parking brake (hand brake)	64
11. Center console switches	52
12. Climate control	77
13. Audio system	226
14. 12 V socket	52, 64
15. Hazard warning flashers	60
16. Glove compartment	92
17. Panel vents	75
18. Text window	46, 50
19. Temperature gauge	46
20. Odometer/Trip odometer/ Cruise control indicator	46
21. Speedometer	46
22. Turn signal indicators	46
23. Tachometer	46
24. Ambient temperature/Clock/ Selected gear indicator	46
25. Fuel gauge	46
26. Indicator and warning symbols	47
27. Panel vents	75
28. Instrument lighting	56
29. Not in use	
30. Lighting panel	55
31. Reading lights	88
32. Interior lighting	88

33. Moonroof control	70
34. Seat belt reminder	12
35. Rearview mirror	67
36. Lock button, for all doors	114
37. Rear seat power window cut-out button	66
38. Controls, power windows	65
39. Controls, sideview mirrors	69
40. Four-C active chassis system (R-models only)	135

pg. 46 Instruments and controls

Instrument panel

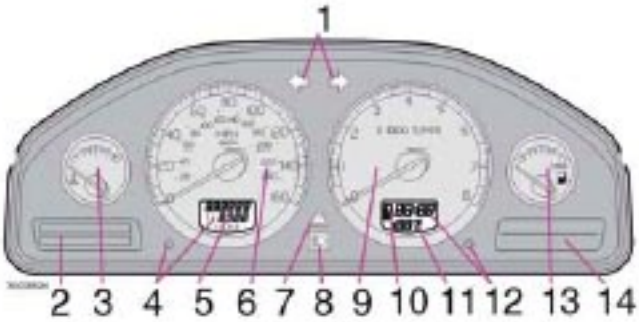

1. Turn signal indicators - right/left
2. Text window
The text window displays information and warning messages.
3. Temperature gauge
The pointer should be approximately midway on the gauge when driving. **Do not drive the vehicle if the warning light is on**. The text window will provide you with additional information.
If the engine temperature remains high, check coolant level - see page 188.
4. Trip odometer
The trip odometers are used for measuring shorter distances. The right-hand digit gives tenth of a mile/ kilometer. Press the button for more than 2 seconds to reset. Change between trip odometers 1 and 2 using one short press on the button.
5. Odometer
6. Speedometer
7. Warning symbol
8. High beam indicator
9. Tachometer

Indicates engine speed in thousands of revolutions per minute (rpm). Do not drive for long with the needle in the red section. The engine has an built-in function preventing excessively high engine speeds. When this function operates, you may discern some pulsation, which in that case is quite normal.

10. Gear and driving mode indicator

The currently selected driving mode is displayed here. If you use the optional Geartronic function on the automatic transmission, the currently selected gear will be displayed.

11. Ambient temperature gauge

This display indicates the air temperature outside your vehicle. A "snowflake" symbol in the text window is displayed when the temperature is in the range of 23 - 36 °F (-5 - +2 °C).

Please note that this symbol does not indicate a fault with your vehicle. At low speeds or when the vehicle is not moving, the temperature readings may be slightly higher than the actual ambient temperature.

12. Clock/set button

Turn the button to set the clock.

13. Fuel gauge

The fuel tank holds approximately:

Front wheel drive, non-turbo models - 18.5 US gal. (70 liters)

All turbo models - 18 US gal. (68 liters)

When the warning light in the gauge comes on, there are approximately 1.8 US gal. (8 liters) of fuel remaining in the tank.

14. Indicator and warning symbols

pg. 47 Instruments and controls

Indicator and warning symbols

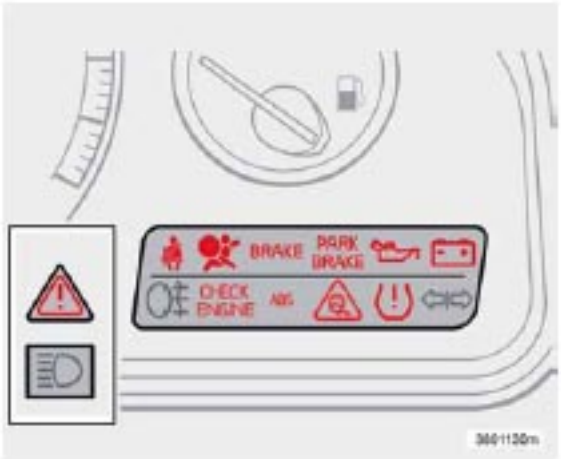

The indicator and warning symbols light up when you turn the ignition key to the driving position (position II) before starting. This shows that the symbols are functioning. When the engine starts, all symbols go out. If the engine is not started within 5 seconds, all symbols except CHECK ENGINE and

go out. Certain symbols may not have their functions illustrated, depending on the vehicle's equipment. The symbol for the parking brake goes out when the parking brake is released.

Warning symbol in center of the instrument panel

This symbol shines as a red or yellow light depending on the severity of the discovered fault.

Red symbol - Stop the vehicle as soon as possible in a suitable location and read the message shown in the text window. The symbol and accompanying text will remain on until the fault has been corrected.

Yellow symbol - Follow the instructions shown in the text window. The text can be erased by pressing the READ button (see page 50), or will disappear automatically after two minutes.

When the message "TIME FOR REGULAR SERVICE" is displayed, the text can be erased and the yellow symbol light can be turned off by pressing the READ button. The text will disappear and the symbol light will go out automatically after two minutes.

Seat belt reminder

This symbol lights up to indicate that the driver has not fastened his/her seat belt.

Supplemental Restraint System SRS

If this light comes on while the vehicle is being driven, or remains on for longer than approximately 10 seconds after the vehicle has been started, the SRS system's diagnostic functions have detected a fault in a seat belt lock or tensioner, a front airbag, side impact airbag, and/or an inflatable curtain. Have the system(s) inspected by a trained and qualified Volvo service technician as soon as possible.

pg. 48 Instruments and controls

Indicator and warning symbols

BRAKE Brake failure warning light If the light comes on while driving or braking, stop immediately, open the hood and check the brake fluid level in the reservoir. See page 189 for reservoir position and page 193 for instructions.

Canadian models are equipped with this warning light

If the BRAKE and ABS warning lights come on at the same time, this could indicate a fault in the brake system.

- Stop the vehicle in a suitable place and switch off the engine.

- Restart the engine.
- If both warning lights go off, no further action is required.
- If both lights are still on after the engine has been restarted, switch off the engine again and check the brake fluid level (see page 189 for the location of the brake fluid reservoir).
- If the brake fluid level is above the MIN mark, drive carefully to an authorized Volvo retailer and have the brake system inspected.

WARNING!

If the fluid level is below the MIN mark in the reservoir or if a "Brake failure - Service urgent" message is displayed in the text window: DO NOT DRIVE. Have the vehicle towed to an authorized Volvo retailer and have the brake system inspected.

PARK BRAKE Parking brake applied This light will be on when the parking brake (hand brake) is applied. The parking brake lever is situated between the front seats. See also page 64 for additional information.

Canadian models are equipped with this symbol.

Oil pressure warning light If the light comes on while driving, stop the vehicle and then stop the engine immediately and check the engine oil level. See page 191. R-models are also equipped with an oil level warning system. If the light stays on after restart, have the vehicle towed to the nearest authorized Volvo retailer. After hard driving, the light may come on occasionally when the engine is idling. This is normal, provided it goes off when the engine speed is increased.

Generator warning light
If the light comes on while the engine is running, have the charging system checked.

Rear fog light
This light indicates that the fog light is on.

CHECK ENGINE Malfunction indicator light
On-Board Diagnostics II (OBDII): As you drive, a computer called "OBDII" monitors your vehicle's engine, transmission, electrical and emission systems. The CHECK ENGINE light will light up if the computer senses a condition that potentially may need correcting. When this happens, please have your vehicle checked by a Volvo retailer as soon as possible.
A CHECK ENGINE light may have many causes. Sometimes, you may not notice a change in your vehicle's behavior. Even so, an uncorrected condition could hurt fuel economy, emission cleanliness, and driveability. Extended driving without correcting the cause could even damage other components in

your vehicle.

Canadian models are equipped with this warning light.

pg. 49 Instruments and controls

Indicator and warning symbols

Anti-lock brake system ABS

If the warning light comes on, there is a malfunction of the ABS system (the standard braking system will still function). The vehicle should be driven to a Volvo retailer for inspection. See page 137 for additional information.

Stability Traction Control (STC)[1] system or Dynamic Stability Traction Control (DSTC) system[2]

This indicator light will flash when STC or DSTC is actively working to stabilize the vehicle. See page 139 for more detailed information.

Tire pressure monitoring light

See page 162 for more information on this function.

Turn signal indicator - trailer (certain models)

If you are towing a trailer, this light will flash simultaneously with the turn signals on the trailer. If the light does not flash when signaling, neither the trailer's turn signals nor the vehicle's turn signals are functioning.

1. Standard on all models except R models.
2. Standard on R models, option on all other models.

pg. 50 Instruments and controls

Indicator and warning symbols

Messages in the text window

When a warning light in the instrument panel comes on, a message is also displayed in the text window. After you have read the message, you can erase it by pressing button A (see illustration).

NOTE: Certain messages cannot be erased until the condition has been corrected. If a warning message is displayed when e.g. you are using the trip computer, this message must be erased before you can access the function of your choice. Press button A to erase the warning message.
You can scroll through the stored messages by pressing button A (see illustration). The text window can be cleared (the message will be returned to memory) by pressing button A again.

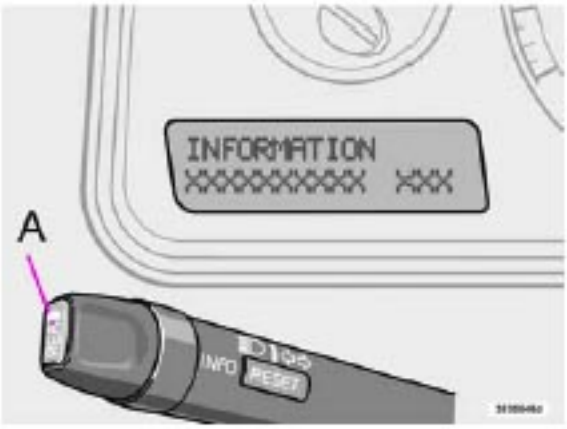

pg. 51 Instruments and controls

Indicator and warning symbols

STOP SAFELY	Stop and switch off the engine - to help prevent serious risk of damage.
STOP ENGINE	Stop and switch off the engine - to help prevent serious risk of damage.
SERVICE URGENT	Take your vehicle to a trained and qualified Volvo service technician for inspection immediately.
SEE MANUAL	Refer to your owner's manual. For additional information, please contact your Volvo retailer.
SERVICE REQUIRED	Take your vehicle to an authorized Volvo retailer for inspection at your convenience (but preferably before the next scheduled maintenance service).
FIX NEXT SERVICE	Have the system affected inspected at the next scheduled maintenance service.

TIME FOR REGULAR SERVICE	This message will be displayed at 7,500 mile (12,000 km) intervals, after 750 hours of driving or after 12 months, whichever occurs first, to remind the driver that the service interval has been exceeded. The message will be displayed for 2 minutes each time the vehicle is started until reset by the servicing retailer.
OIL LEVEL LOW - FILL OIL[1] [2]	Check the oil level and top up if necessary. See page 191.
OIL LEVEL LOW - STOP SAFELY[1] [3]	Stop as soon as possible and switch off the engine, check the oil level and top up if necessary. See page 191.
OIL LEVEL LOW - STOP ENGINE[1] [3]	Stop as soon as possible and switch off the engine, check the oil level and top up if necessary. See page 191.
OIL LEVEL LOW - SEE MANUAL[1] [3]	Stop as soon as possible and switch off the engine, check the oil level and top up if necessary. See page 191.
STC/DSTC SPIN CONTROL OFF	The stability system's spin control function has been turned off. See page 139 for details.

1. These messages apply to R-models only.
2. Yellow warning symbol, see page 47.
3. Red warning symbol, see page 47.

pg. 52 Instruments and controls

Switches in the center console

The positions of these button may vary, depending on the specifications of the vehicle.

Four-C active chassis system (option)

Please see page 135 for information on adjusting the active chassis settings.

Dynamic Stability Traction Control (DSTC) button
This button is available on R-models only and is used to temporarily deactivate the Spin control and Active Yaw Control functions. See page 126 for more information. On non R-models, DSTC is controlled via the menu control ring on the left steering wheel lever, see page 125.

WARNING!

Please be aware that the vehicle's handling characteristics may be affected if the Spin Control function is switched off.

Temporarily disconnecting the alarm sensors (option)
See page 117 for more details.

12 volt socket

This 12 volt socket can be used to plug in certain accessories such as cellular telephones, etc. The ignition key must be in position 1 (or higher) for the auxiliary socket to function.

NOTE: The auxiliary sockets can also be used for cigarette lighters, which are available at your Volvo retailer

Front/rear park assist (option/accessory)
See page 153 for more information on this function.

Power child safety locks (option)
See page 115 for more information.

pg. 53 Instruments and controls

Switches in the center console

Active Bi-Xenon headlights (ABL) - option
The beams of ABL headlights adjust laterally to help light up a curve according to movements of the steering wheel when the vehicle is turning. This function is activated automatically when the engine is started and can be deactivated/reactivated by pressing the button. The indicator light in the button is on when the function is activated. See also page 55.

pg. 54 Instruments and controls

Steering wheel adjustment

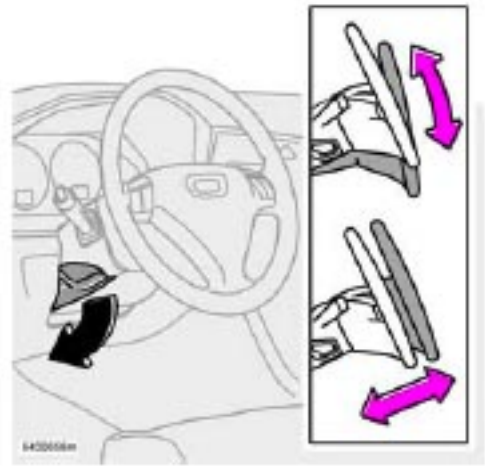

Both the height and the reach of the steering wheel can be adjusted to a comfortable position for the

driver. Pull down the lever on the left of the steering column. Adjust the steering wheel to a suitable position and press the lever back into place to lock the steering wheel in the new position. Check that the steering wheel is locked in the new position.

WARNING!

Never adjust the steering wheel while driving.

pg. 55 Instruments and controls

Lighting panel

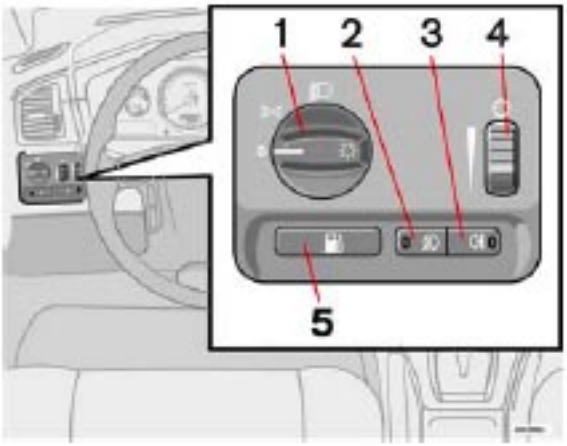

1. Headlight/parking light switch
2. Front fog lights
3. Rear fog light
4. Instrument panel lighting
5. Fuel filler door unlock button

Parking lights
The front and rear parking lights can be turned on even when the ignition is switched off.
- Turn switch 1 to position .
The license plate lights also illuminate when the parking lights are switched on.

Headlights
- Turn the ignition key to position II.
- The low beam headlights (daytime running lights) illuminate automatically, except when the light switch (1) is in position [1].
See page 57 for information on switching between high and low beams.

NOTE: Active Bi-Xenon headlights (option): Turn the headlight switch to position 0 to activate a daylight sensor, which automatically switches the low beams on or off, depending on ambient light conditions. When driving in daylight, the headlights will switch off and the daytime running lights will come on. In darkness, the daytime running lights will switch off and the Active Bi-Xenon headlights will switch on.

Active Bi-Xenon headlight beams

Active Bi-Xenon headlights (ABL) - option
When the ABL function is activated, the headlight beams adjust laterally to help light up a curve according to movements of the steering wheel (see the right-pointing beam in the illustration above). This function is activated automatically when the engine is started and can be deactivated/ reactivated by pressing the ABL button (see page 53).

1. On Canadian models, the daytime running lights will remain on with the light switch in this position.

pg. 56 Instruments and controls

Lighting panel

Fog lights
Front fog lights (option)
The front fog lights can be used in combination with either the headlights or the parking lights.
- Turn the ignition key to position II.
- Press button 2 to turn on the front fog lights.
An indicator light in the button illuminates when the front fog lights are on.

Rear fog light
The single rear fog light is located in the driver's side tail light cluster.
The rear fog light will only function in combination with the high/low beam headlights or the optional

front fog lights.
- Turn the ignition key to position II.
- Press button 3 to turn on the rear fog light.
An indicator light in the button illuminates when the rear fog light is on.

NOTE: The rear fog light is considerably brighter than the normal tail lights and should be used only when conditions such as fog, rain, snow, smoke or dust reduce visibility for other vehicles to less than 500 ft. (150 meters).

Instrument panel lighting
The instrument panel lighting illuminates when the ignition key is in position II and the light switch (1) is in either position 0 or ≡D.
- Move the thumb wheel (4) up to increase brightness or down to decrease brightness.

Unlocking the fuel filler door
Press button 5 when the vehicle is at a standstill to unlock the fuel filler door. Please note that the fuel filler door will remain unlocked until the vehicle begins to move forward. An audible click will be heard when the fuel filler door relocks.

NOTE: If the fuel filler door does not unlock after the button has been pressed, drive the vehicle at a speed of at least 5 mph (8 km/h), stop the vehicle, and press the button again.
See the information to the right on unlocking the fuel filler door manually.

pg. 57 Instruments and controls

Left-side steering wheel lever

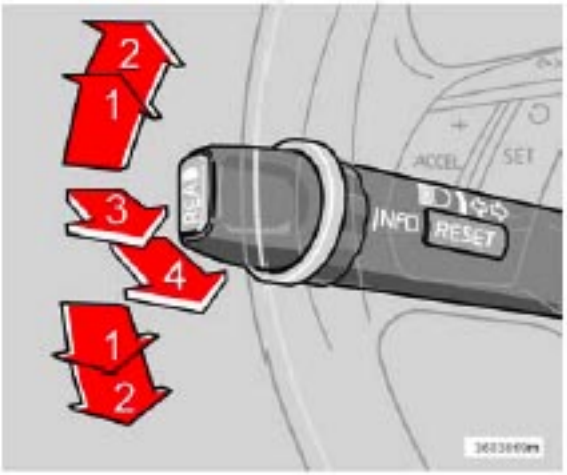

Lever positions

1. Turn signals, lane change position
2. Turn signals, position for normal turns
3. High beam flash
4. Toggle between high and low beams, Home Safe lighting

Turn signals
When turning
Move the lever as far up or down as possible (to position 2) to start the turn signals. The turn signals will be cancelled automatically by the movement of the steering wheel, or the lever can be returned to its initial position by hand.

When changing lanes
The driver can automatically flash the turn signals 3 times by:

- Moving the turn signal lever up or down to position 1 and releasing it.
- Moving the lever up or down to position 2 and immediately back to its original position.

NOTE:
- This automatic flashing sequence can be interrupted by immediately moving the lever in the opposite direction.
- If the turn signal indicator flashes faster than normal, check for a burned-out turn signal bulb.

High/low beam headlights
Continuous high beams
- Turn the ignition key to position II.
- With the light switch (1) in position , (see page 55) pull the turn signal lever toward the steering wheel (position 4) to toggle between high and low beams (this also applies on models equipped with the optional Active Bi-Xenon headlights).

High beam flash
- Turn the ignition key to position II.
- Pull the turn signal lever to position 3. The high beams will remain on until the lever is released.

Home safe lighting
When you leave your vehicle at night, you can make use of the home safe lighting function to illuminate the area in front of the vehicle.
- Remove the key from the ignition switch.
- Pull the direction indicator lever as far as possible towards the steering wheel (to position 4) and release it.
- Exit the vehicle and lock the doors.

The headlights and parking lights will illuminate and remain on for 30[1], 60 or 90 seconds. The time interval can be changed by an authorized Volvo retailer.

1. Factory setting

pg. 58 Instruments and controls

Right-side steering wheel lever

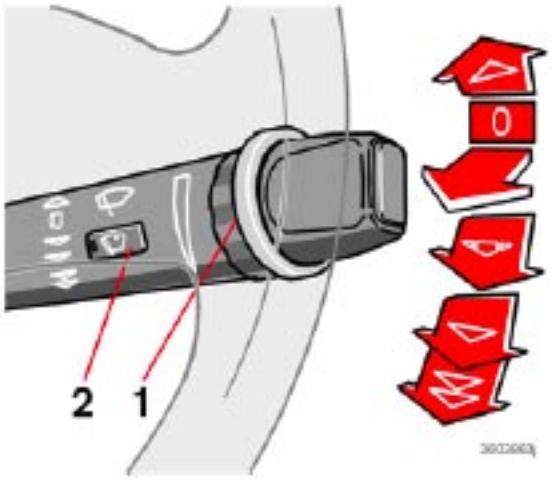

Windshield wipers

0 Windshield wipers off

If the lever is in the 0 position and you move it upwards, the wipers will sweep one stroke at a time for as long as you hold the lever up.

Intermittent wiper function

With the lever in this position, you can set the wiper interval by twisting the control ring 1 upward to increase wiper speed or downward to decrease the speed.

Headlight wiper/washer (certain models)

When the lever is pulled to wash the windshield, high pressure jets mounted in the bumper will spray the headlights.

CAUTION!

Use ample washer fluid when washing the windshield. The windshield should be thoroughly wet when the wipers are in operation.

- To conserve washer fluid in driving conditions where the windshield washers are used frequently, the headlights will only be washed once for every five times the windshield is washed within a 10-minute period.
- A short pull on the lever will wash the windshield only.
- When approximately 1 US quart (1 liter) remains in the washer fluid reservoir, the headlights will not be washed when the lever is pulled to conserve washer fluid for the windshield.

NOTE: R-models are also equipped with headlight wipers, which are activated along with the washer function.

Rain sensor (option)
The rain sensor automatically regulates wiper speed according to the amount of water on the windshield. The **sensitivity** of the sensor can be adjusted by twisting ring 1 up (the wipers will sweep the windshield more frequently) or down (the wipers will sweep the windshield less frequently).

Activating the rain sensor:
- Turn the ignition key to at least position I and put the windshield wiper lever in position 0.
- Press button 2.
An LED in the button will light up to indicate that the rain sensor is active.

Deactivating the rain sensor:
- Press button 2.
or
- Move the windshield wiper lever **down** to another position.
Moving the lever up will not deactivate the rain sensor. Doing so will cause the wipers to sweep the windshield until the lever is released, at which time the wipers return to rain sensor mode.

pg. 59 Instruments and controls

Right-side steering wheel lever

CAUTION!

The rain sensor should be deactivated when washing the vehicle in an automatic car wash, etc. If the rain sensor function is left on, the wipers will start inadvertently in the car wash and could be damaged.

Continuous wiper function.

Wipers operate at "high" speed.

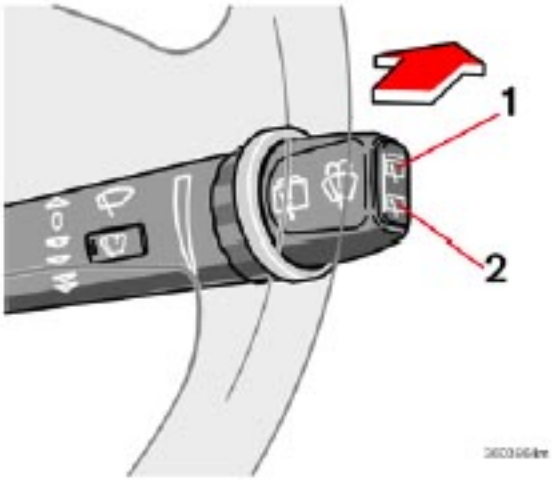

Tailgate wiper/washer
1 - Intermittent wiping
2 - Normal wiping
To operate the tailgate washer: Move the lever **forward** to start the tailgate washer. When less than approximately 1 US qt (1 liter) of washer fluid remains in the reservoir, the tailgate window will not be washed.

Tailgate wiper and reverse gear
If the front wipers are on and the transmission is put into reverse gear, the tailgate wiper will go into intermittent wiping function[1].
If the tailgate wiper is already in normal wiping function, the normal wiping function will continue.

1. Consult your Volvo retailer if you would like to have this function deactivated.

pg. 60 Instruments and controls

Hazard warning flashers, rear window/sideview mirror defroster

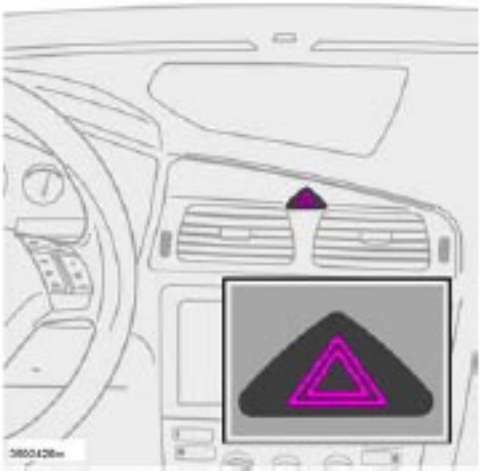

Hazard warning flashers
The four-way flasher should be used to indicate that the vehicle has become a traffic hazard. To activate the flashers, press the triangular button in the center dash. Press the button again to turn off the flashers.

NOTE: Regulations regarding the use of the hazard warning flasher may vary, depending on where you live.

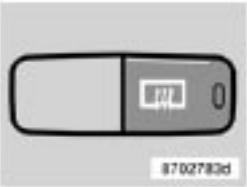

Rear window and sideview mirror defroster
Press the switch to start heating the rear window and sideview mirrors to remove ice or condensation. An LED in the switch will light up.
A timer automatically switches off the heating after approximately 12 minutes. The LED will go out correspondingly.

pg. 61 Instruments and controls

Trip computer

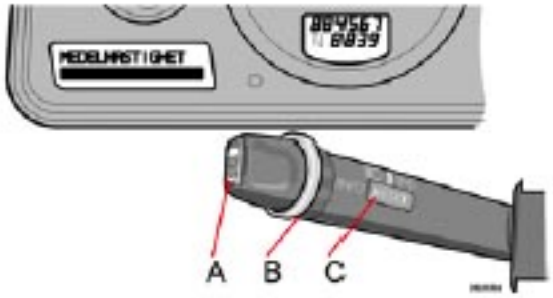

Trip computer
The trip computer stores information gathered from several systems in your vehicle and has four menus that can be displayed in the text window.

- Driving distance on current fuel reserve
- Average fuel consumption
- Current fuel consumption
- Average speed
- Current speed in mph (Canadian models only)
- STC/DSTC (see page 125 for detailed information)

NOTE: Warning messages from the vehicle's monitoring systems will override the trip computer function. If a warning message is displayed in the text window while you are using the trip computer, you must acknowledge the message by pressing button A. Press button A again to return to the trip computer function.

Trip computer controls and functions
The four[1] trip computer functions can be accessed by twisting control B one step at a time in either direction. Twisting a fifth[2] time returns you to the original function. The trip computer can be reset (current data will be erased from system memory) by pressing RESET (button C).

1. Driving distance on current fuel reserve
This function shows the approximate distance that can be driven on the fuel remaining in the tank. This calculation is based on average fuel consumption during the last 20 miles (30 km) of driving and the amount of fuel remaining in the tank when the reading was taken. When the driving distance on current fuel reserve is less than 12 miles (20 km), "----" will be displayed in the text window.

2. Average fuel consumption
This value indicates fuel consumption since the last time the trip computer was reset (by pressing RESET, button C). When the engine is switched off, information on fuel consumption is stored and remains in system memory until the RESET (button C) is pressed again.

3. Current fuel consumption
This value indicates the current fuel consumption, based on readings taken once per second. When the

vehicle is not moving, "----" will be displayed.

4. Average speed
This value indicates average speed since the last time the trip computer was reset (by pressing RESET, button C). When the engine is switched off, information on average speed is stored and remains in system memory until the RESET (button C) is pressed again.

5. Current speed in miles per hour (Canadian models only)
This function provides the driver with an instantaneous conversion of the vehicle's current speed from km/h to mph.

NOTE: Trip computer readings may vary slightly depending on the circumference of the tires on the vehicle and driving style.

1. Five functions on Canadian models.
2. A sixth time on Canadian models.

pg. 62 Instruments and controls

Cruise control

Cruise control
The cruise control panel is located on the left side of the steering wheel hub and may differ in appearance, depending on the model.

Engaging cruise control
Press the CRUISE button. CRUISE will be displayed in the information window in the instrument panel.

NOTE: This does not set the vehicle's speed.

Setting speed
Press + or - to set the current speed. CRUISE-ON will be displayed in the information window in the instrument panel.

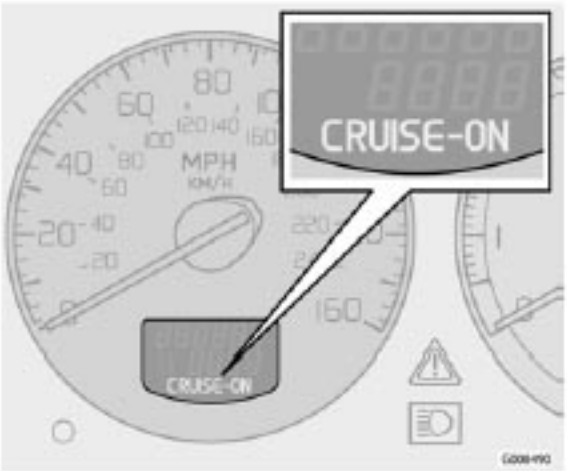

Increasing or decreasing speed
Use + or - in the following ways to increase or decrease the vehicle's speed:
- Press and hold down + or - until the vehicle reaches the desired speed.
- Press + or - for approximately a half second and release the button to increase or decrease vehicle speed by approximately 1 mph (1.6 km/h).

NOTE: Cruise control will not function at speeds below approximately 20 mph (30 km/h).

Braking
- Cruise control is automatically disengaged when the brake pedal is depressed. The currently set speed is stored in memory.
- Pressing resume will return the vehicle to the previously set speed.

Acceleration
Momentary acceleration, such as when passing another vehicle, does not affect cruise control operation. The vehicle will automatically return to the previously set speed when you release the accelerator pedal.

Disengaging cruise control
To disengage cruise control, press the CRUISE button. CRUISE or CRUISE-ON will no longer be displayed in the information window in the instrument panel.

NOTE: Cruise control is automatically disengaged if:
- the engine is switched off
- the gear selector is placed in (N)eutral
- the wheels start to spin or lock
- if an increase in speed is maintained for more than one minute

- if the vehicle's speed falls below approximately 20 mph (30 km/h).

pg. 63 Instruments and controls

Cruise control

Temporarily disengaging cruise control

- Press 0 to temporarily disengage cruise control. CRUISE will be displayed in the information window in the instrument panel.
- Press the brake pedal.

Press "resume" to return to the previously set speed.

WARNING!

Cruise control should not be used in heavy traffic or when driving on wet or slippery roads, or when driving on unpaved or uneven road surfaces. Cruise control may not maintain set speed on steep downgrades.

pg. 64 Instruments and controls

Parking brake, auxiliary socket/cigarette lighter

Parking brake (hand brake)

The lever is located between the front seats. The brake is applied to the rear wheels.

When applying the parking brake
- Press firmly on the brake pedal.
- Pull up the parking brake lever as far as possible.

WARNING!

Always apply the parking brake fully when the vehicle is parked. The indicator light will light up even if the parking brake has only been partially applied. Always pull up the lever as far as possible.

- Release the brake pedal and ensure that the vehicle is at a standstill.
- Put the gear selector in P (automatic transmission) or in 1st gear (manual transmission).

Parking on a hill
- If the vehicle is pointing uphill, turn the front wheels so that they point away from the curb.
- If the vehicle is pointing downhill, turn the front wheels so that they point toward the curb.

Releasing the parking brake
- Press firmly on the brake pedal.
- Pull the lever up slightly, press the button at the end of the lever and lower the lever completely.

Auxiliary sockets
The 12 volt sockets can be used to plug in certain accessories such as cellular telephones, etc. The key must be in position I (or higher) for the auxiliary socket to function.

NOTE: The cover should be folded down when the auxiliary socket is not in use.

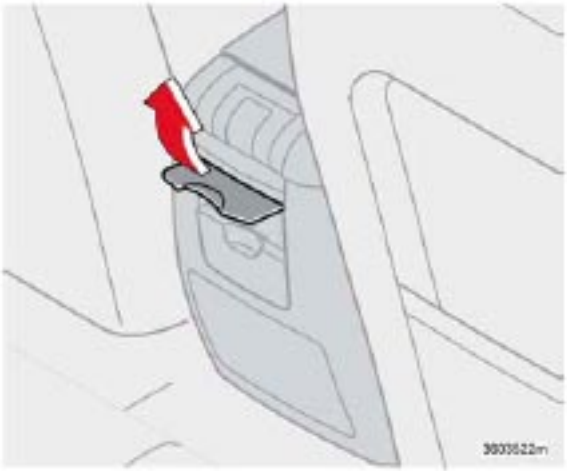

Auxiliary 12 volt socket (option in rear seat)

Cigarette lighter/ashtrays

The auxiliary sockets can also be used for cigarette lighters, which are available at your Volvo retailer.

NOTE: Volvo vehicles in North America do not have an ashtray in the front seat as standard equipment. If you want to have an ashtray in the front seat, please contact your Volvo retailer.

pg. 65 Instruments and controls

Power windows

The power windows are controlled by buttons in the arm rests. The ignition switch must be ON[1] (ignition key in position I, II or the engine running) for the electrically operated windows to function.
To lower: Press down the front edge of the button to the first detent ("stop").
To raise: Lightly pull up the front edge of the button to the first detent ("stop").

Auto up/down function (front doors only):
Either front door window can be opened or closed automatically.
Auto down: Press the front part of the button as far down as possible and release it immediately. To stop the window at any time, pull the button up.
Auto up: Pull the front part of the button up as far as possible and release it immediately. To stop the window at any time, press the button down.

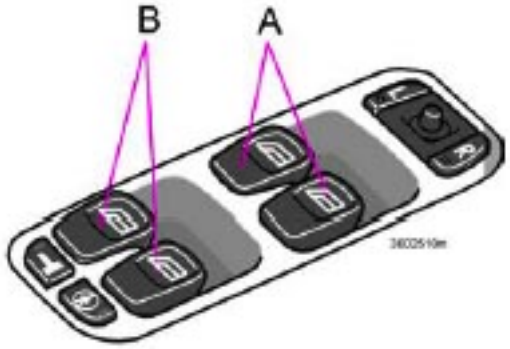

A - front windows, B - rear windows

NOTE: The electrically operated windows in the front seat have an overload protecting circuit breaker which reverses movement of the electrically operated windows to their starting points if they are obstructed in any way. Thereafter the windows will operate normally again.

WARNING!

Always remove the ignition key when the vehicle is unattended.
Make sure that the windows are completely unobstructed before they are operated.
Never leave children unattended in the vehicle.

1. The electrically operated windows will also function after the ignition has been switched off as long as neither of the front doors has been opened.

pg. 66 Instruments and controls

Power windows

Cutout switch for rear windows

Cutout switch for rear windows
The electrically operated rear door windows can be disabled by a switch located on the driver's door (see illustration).

If the LED in the switch is OFF: The rear door windows can be raised or lowered with the buttons on the rear door armrests or with the buttons on the driver's door armrest.

If the LED in the switch is ON: The rear door windows can only be raised or lowered with the buttons on the driver's door armrest.

Power window on the front passenger's side
The control for the electrically operated window in the front passenger's seat operates that window only.

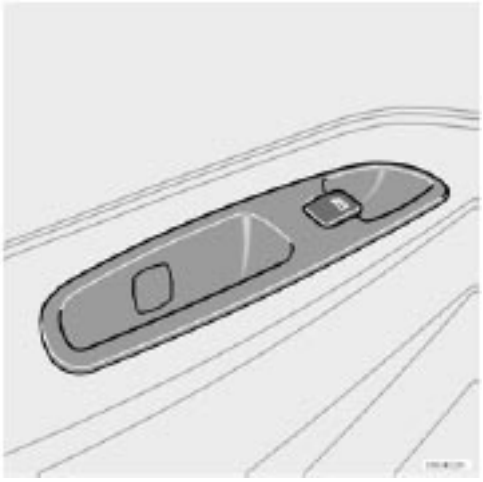

Power windows in the rear doors
The rear door windows can be operated with the control on each door and the switch on the driver's door. If the LED in the switch for blocking electrically operated windows in the rear doors (located in the driver's door control panel) is on, the rear door windows can only be operated from the driver's door.

pg. 67 Instruments and controls

Rearview mirror/sideview mirrors

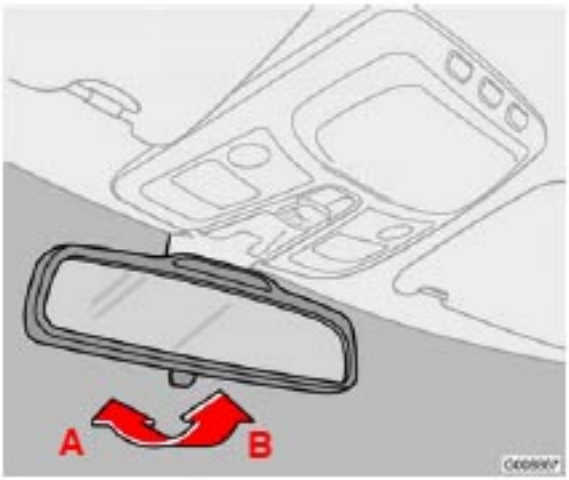

Rearview mirror
To reduce glare from the headlights of following vehicles, use the control to switch between the normal and night-driving positions.
A. Normal position
B. Night position, reduces glare from following headlights

Autodim function (option)
The autodim function reacts to headlights from following traffic and automatically reduces glare.

NOTE: This function is automatically switched off when the gear selector is placed in the Reverse position.

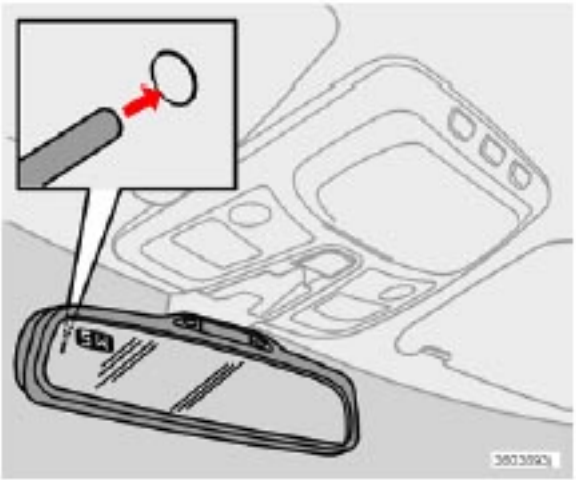

Rearview mirror with compass (option)
The upper left-hand corner of the rearview mirror has an integrated display that shows the compass direction toward which the car is pointing. Eight different directions can be displayed: N, NE, E, SE, S, SW, W and NW. The display shows your car's orientation with respect to true north.
If the compass is activated, it will be displayed automatically when the ignition is in postilion II or when the engine is running. The compass can be switched off or on by pressing the inset button on the rear

side of the mirror (see the inset illustration). This can be done with straightened paper clip or similar object. The button is recessed approximately 1 in. (2.5 cm) in the mirror.

pg. 68 Instruments and controls

Rearview mirror/sideview mirrors

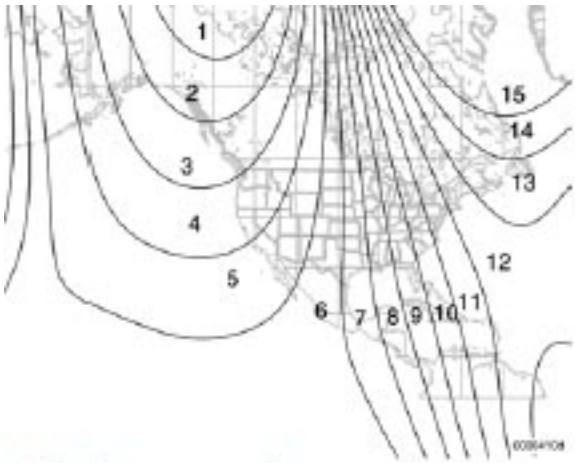

Selecting a magnetic zone

Magnetic zones
The earth is divided into 15 magnetic zones. The compass is initially set for the zone to which the car was delivered, and should always be adjusted if the car is driven to a new magnetic zone. To do so:
- Switch the ignition to position II.
- Press the button on the rear side of the mirror with straightened paper clip or similar object for approximately 3 seconds until ZONE is displayed. The number of the current magnetic zone will also be displayed.
- Press the button repeatedly until the number for the desired zone (1-15) is displayed.

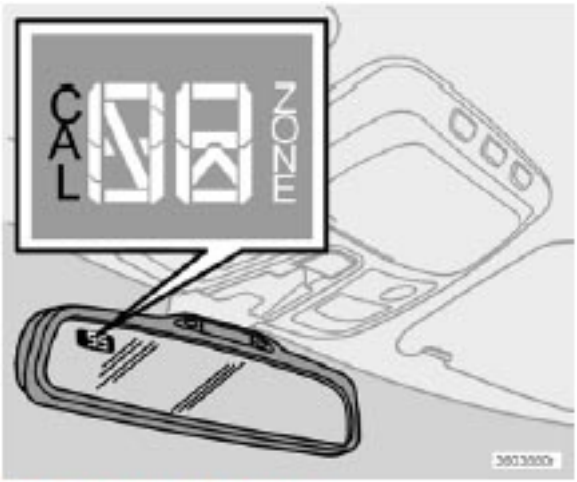

Calibrating the compass

After several seconds, the compass heading will again be displayed, and the change of magnetic zones is

complete.

Calibrating the compass
- Stop the car in a large, open area, away from traffic.
- Turn off as many electrical devices in the car as possible to avoid interference with the compass (e.g. audio system, etc).
- Using a pen or similar object, hold the button (1) depressed for at least 6 seconds. "CAL" will be displayed.
- Drive slowly in a circle at a maximum speed of 5 m.p.h. (8 km/h) until CAL is no longer displayed.

NOTE: This step can also be done by driving normally until CAL is no longer displayed. Calibration is complete.

pg. 69 Instruments and controls

Rearview mirror/sideview mirrors

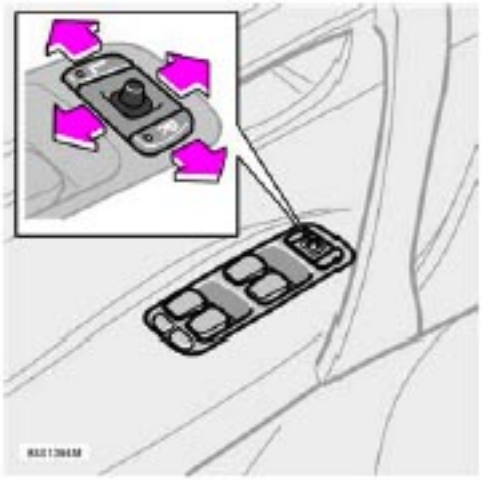

Power sideview mirrors
The mirror control switches are located on the driver's door armrest.
Driver's side: Press the L switch (an LED in the switch will light up) to activate the adjustment control and then use this control to adjust the driver's door mirror.
Passenger's door: Press the R switch (an LED in the switch will light up) and then use the adjustment control to adjust the passenger's door mirror.
After you have adjusted the mirror(s), press the L or R switch again (the LED will go out) to deactivate the adjustment control.

WARNING!

The mirrors should always be adjusted prior to driving. Objects seen in the passenger's side wide-angle sideview mirror are closer than they appear to be.

Remote central locking and sideview mirror memory-option
If you lock the vehicle and later unlock it with the **same** remote control and open the driver's door, the sideview mirrors (and the driver's seat) will automatically move to the position they were in when you left the vehicle. This feature will work in the same way with all of the remote control transmitters (up to 3) that you use with your vehicle. This feature will not function if you lock your vehicle with the key.

Water repellent glass-option on certain models

The side door windows can be treated with a water repellent coating. The symbol to the left indicates these windows have this coating. The optional laminated side windows always have this coating.
The coating improves vision by causing the water to run off quickly.
See page 179 for information on cleaning this type of glass.

CAUTION!

Use only suitable plastic scrapers to remove ice or snow from the mirrors. Using a metal ice scraper could damage the water repellent coating.

pg. 70 Instruments and controls

Power moonroof (option)

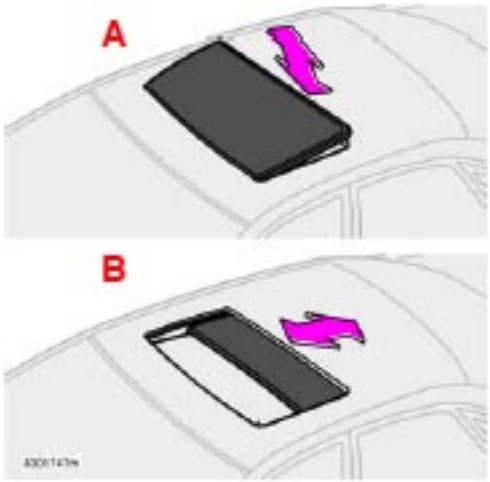

Power moonroof
To operate the moonroof, turn the ignition key to position I or II, or start the engine. The moonroof can be operated in two ways:
A. Tilt position
B. Sliding moonroof

A. Tilt position
Open: With the moonroof closed, push up the rear edge of the switch (position 5 in the illustration below).
Close: Pull down and hold the rear edge of the switch (position 6 in the illustration below) until the moonroof has closed completely.

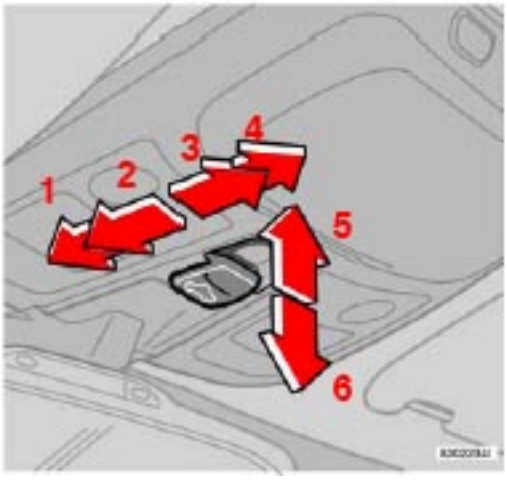

B. Sliding moonroof
Manual open: Pull the switch rearward to position 3 and hold it until the moonroof has opened to the position of your choice.
Auto open: Pull the switch as far back as possible (position 4) and release it to automatically slide open the moonroof to the "comfort"[1] position. Pull the switch rearward again to open the moonroof completely.
Manual close: Push the switch to position 2 and hold it until the moonroof has closed completely or to

the position of your choice.
Auto close: Push the switch forward as far as possible (position 1) and release it to automatically close the moonroof.

1. A position where the moonroof is not quite fully open, which helps alleviate "rumbling" wind noise.

CAUTION!

- Remove ice and snow before opening the moonroof.
- Do not operate the moonroof if it is frozen closed.
- Never place heavy objects on the moonroof.

WARNING!

- Never open/close the moonroof it is obstructed in any way when in operation.
- Never allow a child to operate the moonroof.
- Never extend any object or body part through the open moonroof, even if the vehicle's ignition is completely switched off.
- Never leave a child alone in a vehicle.

pg. 71 Instruments and controls

Power moonroof (option)

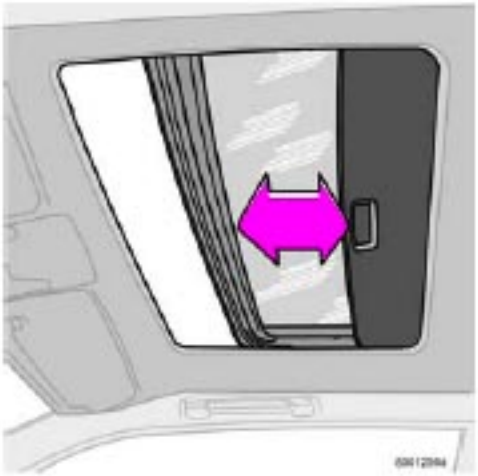

Sun visor
The optional moonroof also features a sliding sun visor. The visor slides open automatically when the

moonroof is opened. The visor must be closed manually.

WARNING!

The moonroof must never be obstructed in any way when in operation.

pg. 72 Instruments and controls

This page left intentionally blank.

Contents | Top of Page

2 0 0 7
VOLVO
XC70

Climate

pg. 73 Climate

pg. 74 Climate

Climate control systems - general information

Condensation on the inside of the windows
Keeping the insides of the windows clean will help reduce the amount of condensation that forms on the windows. Use a commercial window cleaning agent to clean the windows.

Ice and snow
Always keep the air intake grille at the base of the windshield free of snow.

Cabin air filter
Replace the cabin air filter with a new one at the recommended intervals. Please refer to your Warranty and Service Records Information booklet, or consult your Volvo retailer for these intervals. The filter should be replaced more often when driving under dirty and dusty conditions. The filter cannot be cleaned and therefore should always be replaced with a new one.

Sensors
The sunlight sensor on the dashboard and passenger compartment temperature sensor in the ECC control panel should not be covered in any way as this could cause incorrect information to be sent to the ECC system.

Parking the vehicle in warm weather
If your vehicle has been parked in the sun in warm weather, opening the windows and moonroof (option) for several minutes before driving will help release the warm air from the passenger compartment. When the engine is running, close the windows and moonroof and use the recirculation function for several minutes to enable the air conditioning to cool the compartment as quickly as possible.

Windows and optional moonroof
The ECC system will function best if the windows and optional moonroof are closed. If you drive with the moonroof open, we recommend that you manually adjust the temperature and blower control (the LED in the AUTO switch should be off).

Acceleration

The air conditioning is momentarily disengaged during full-throttle acceleration.

Climate control maintenance
Special tools and equipment are required to maintain and carry out repairs on the climate system. Work of this type should only be done by a trained and qualified Volvo service technician.

Refrigerant
Volvo cares about the environment. The air conditioning system in your vehicle contains a CFC-free refrigerant - R134a (HFC134a). This substance will not deplete the ozone layer. The system contains 1.5 lbs (700 g) R134a and uses PAG oil.

Climate system blower
The climate system blower will be automatically switched off when the engine is not running (even if the ignition key is in position I or II) to avoid unnecessary battery drain. To activate the blower, turn the control to the desired setting.

Passenger compartment blower
Approximately 50 minutes after the ignition is turned off, the blower may come on automatically, and run for seven minutes, to remove condensation in the A/C evaporator.

pg. 75 Climate

Air distribution

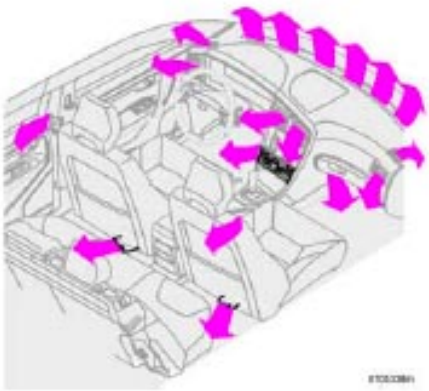

Air distribution
The incoming air is distributed through 14 ventilation points in the passenger compartment.

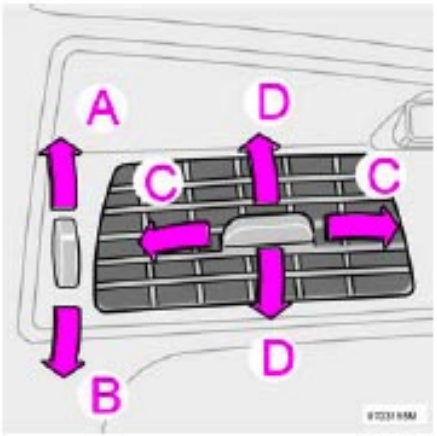

Air vents in the dash
A. Open
B. Closed
C. Horizontal air flow
D. Vertical air flow

- Direct the outer air vents toward the side windows to defrost.
- In cold weather, close the air vents in the center of the dash to direct as much air as possible toward the windows.

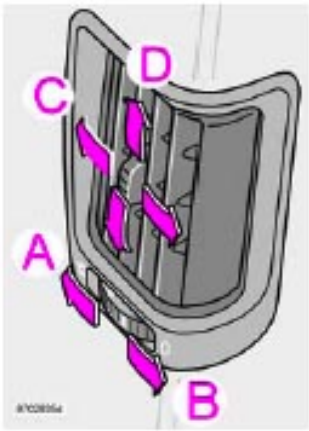

Air vents in the door pillars
A. Open
B. Closed
C. Horizontal air flow
D. Vertical air flow
- Direct the outer air vents toward the side windows to defrost.
- In cold weather, close the air vents in the center of the dash to direct as much air as possible toward the windows.

pg. 76 Climate

Electronic climate control, ECC

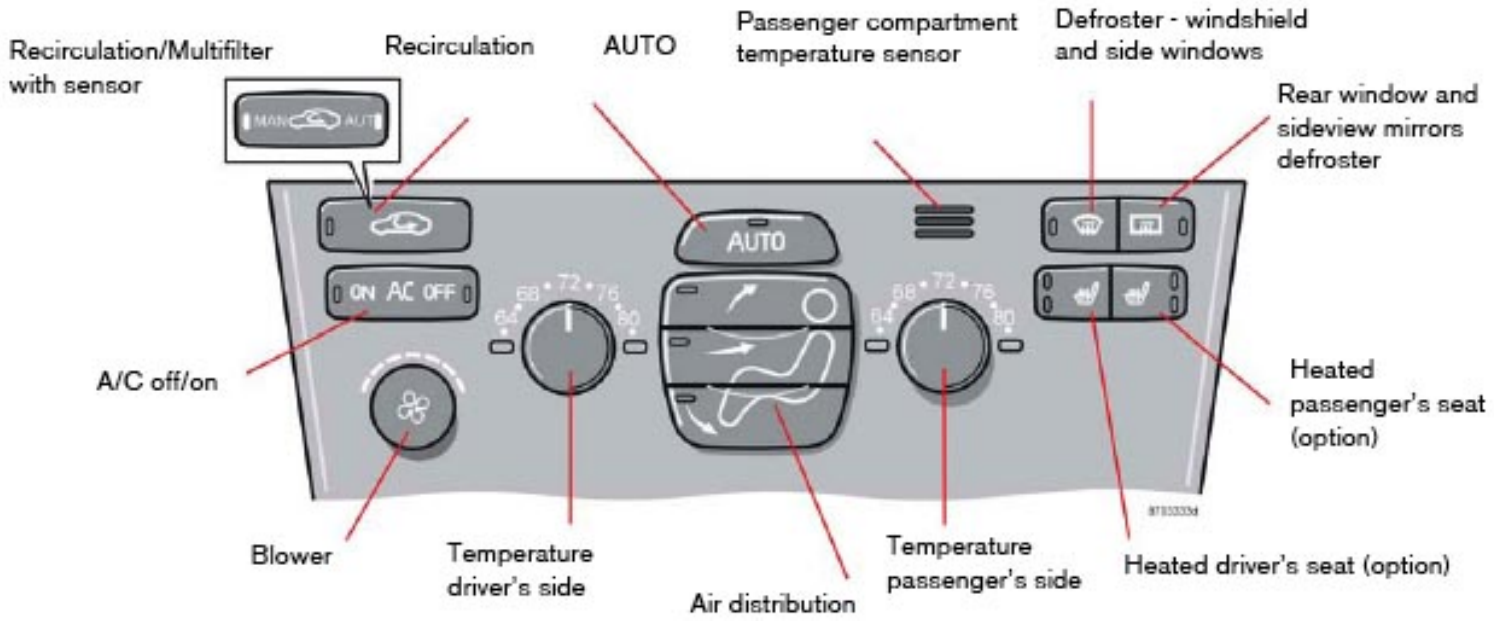

pg. 77 Climate

Electronic climate control, ECC

AUTO

This function automatically regulates the Electronic Climate Control system so that the selected temperatures are maintained. The blower, heating, air distribution (air flow), air conditioning, and optional air quality sensor are controlled. If you prefer to manually set any of these functions, the remaining functions will still be controlled automatically. Pressing the AUTO button overrides any settings that were previously made manually.

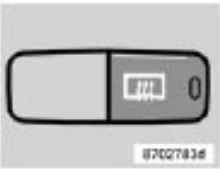

Rear window and sideview mirror defrosters

This function defrosts/ de-ices the rear window and sideview mirrors. The LED in the switch will light up to indicate that the heating function is engaged. See page 60 for additional information on this function.

Never use ice scrapers made of metal as they can easily scratch the mirror surface.

Temperature

These controls are used to individually set the temperature for both sides of the passenger compartment. Please note that the compartment will not be heated or cooled faster by setting the temperature higher or lower than necessary. Set the control to the temperature you prefer.

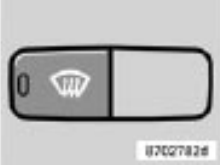

Defroster

This function defrosts/ de-ices the windshield and front side windows. The LED in the switch will light up to indicate that the defrost function is engaged.

- Blower speed increases automatically and the air conditioning will switch on (if not already on and if the passenger compartment blower is not turned off) to dehumidify the air in the passenger compartment.
- Recirculation will not function while defrost is engaged.
- The climate system will return to its previous settings when the defroster function is switched off.

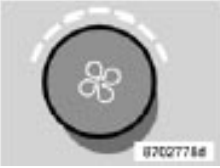

Blower control

Turn the control clockwise to increase or counterclockwise to decrease the blower speed. Pressing the AUTO switch will automatically regulate blower speed and override manual adjustment.

Turning the blower control counterclockwise until an orange LED comes on will turn both the blower and the air conditioning off.

pg. 78 Climate

Electronic climate control, ECC

Air distribution

Air flow to windows

Air through panel vents

Air through floor vents

Press **AUTO** to automatically regulate air flow or press any combination of the controls shown in the illustration to manually adjust air flow. An LED in the switch will light up if an air flow control has been pressed.

Heated front seats (option)
- Press the switch once for maximum seat heating. Both LEDs in the switch will be lit.
- Press the switch a second time for comfort heating. One LED in the switch will be lit.
- Press the switch a third time to turn the heating off completely. The LED will go off.

The seat heating for the passenger seat should be switched off when the seat is not occupied.

A/C - ON/OFF

Press the switch to turn the air conditioning on or off. The "ON" or "OFF" LED will light up to indicate if the system is switched on or off. Other functions will still be regulated automatically (if the **AUTO** switch is on).

- The air conditioning functions only at temperatures above 32 °F (0 °C).
- While the Defroster function is selected, the air conditioning is temporarily activated to dehumidify the air, even if you have manually switched the air conditioning off. This will only function if the blower is not switched off.

Recirculation

Press this switch to engage the recirculation function (air in the passenger compartment recirculates - no fresh air enters the compartment). The LED in the switch will light up to indicate that the function is engaged.

- Use this function if the outside air is contaminated with exhaust gases, smoke, etc or to heat/cool the vehicle quickly.
- Recirculation should not be used for more than 15 minutes. If your windows begin to fog or mist, make sure that the recirculation function is switched off.
- Selecting **Defroster** automatically switches recirculation off.
- Timer mode activation: (vehicles with the Interior Air Quality system have no timer mode) Press and hold the recirculation button for at least 3 seconds to activate a recirculation timer mode. The amber LED in the recirculation button will flash 5 times to show that the timer mode is being activated. In timer mode, each time the recirculation button is pressed, the climate control system will recirculate the air in the passenger compartment for 5- 12 minutes, depending on the outside air temperature, and then revert back to fresh air.
- Timer mode deactivation: Press and hold the recirculation button for 3 seconds. The amber LED in the recirculation button will illuminate steadily for 5 seconds to show a return to "normal" mode.
- In normal mode, when the recirculation button is pressed, the climate control

pg. 79 Climate

Electronic climate control, ECC

system will recirculate the air in the passenger compartment until the recirculation button is pressed again.
- Timer mode memory: If the vehicle is turned off while timer mode is active, timer mode will still be active when the vehicle is restarted.

Interior air quality sensor (option)
Some vehicles are equipped with a multi-filter and air quality sensor. The filter separates gases and particles, thereby reducing the amounts of odors and contaminants entering the vehicle. The air quality sensor detects increased levels of contaminants in the outside air. When the air quality sensor detects contaminated outside air, the air intake closes and the air inside the passenger compartment is recirculated, i.e. no outside air enters the vehicle. The filter also cleans recirculated passenger compartment air.
When the ECC system is in the AUTO mode, the green LED will be on .

Operation
Press

to operate the air quality sensor (normal setting).
or:
Select one of the following three functions by pressing 1, 2 or 3 times. 1. The AUT LED lights. The air quality sensor is now activated.
2. No LED lights. Recirculation is not activated unless needed to cool the passenger compartment in a warm climate.
3. The MAN LED lights. Recirculation is now activated.

Keep in mind the following:
- Make it a rule to have the air quality sensor activated at all times.
- Recirculation is limited in cold climates to avoid fogging.
- If window fogging occurs, you should deactivate the air quality sensor.
- If fogging occurs, use the defroster functions for the windshield, side windows and rear window. See page 77.
- The filter should be changed at the intervals recommended in the service schedule. However, if the vehicle is used in a severely contaminated environment, it may be necessary to change the filter more frequently.

pg. 80 Climate

Manual climate control with air conditioning, A/C

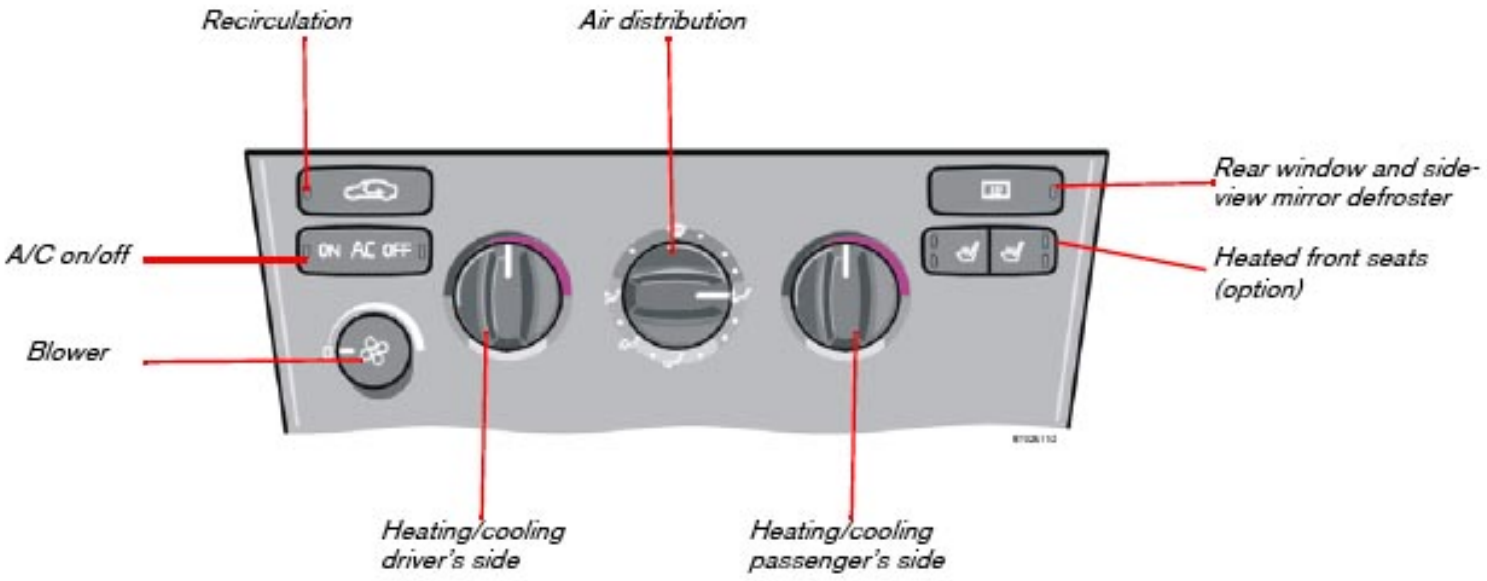

pg. 81 Climate

Manual climate control with air conditioning, A/C

A/C - ON/OFF

The air conditioning function is engaged by pressing ON and disengaged by pressing OFF.

When you select Defroster , the air conditioning is automatically engaged if the blower is not set to position 0.

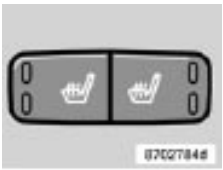

Heated front seats (option)

Please see page 78 for more information on this function.

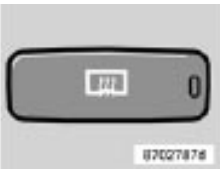

Heated rear window/ sideview mirrors

This function demists/ de-ices the rear window and sideview mirrors. The LED in the switch will light up to indicate that the heating function is engaged. See page 77 for additional information on this function.

CAUTION!

Never use ice scrapers made of metal as they can easily scratch the mirror surface.

Recirculation

Recirculation can be used to shut out stale air, exhaust, etc. from the passenger compartment. The air in the passenger compartment is then recirculated, i.e. no air from outside the vehicle is taken into the vehicle when this function is activated. Recirculation (together with the air conditioning system) cools the passenger compartment more quickly in warm weather.

If you allow the air in the vehicle to recirculate, there is a risk of icing and fogging, especially in winter. The timer function minimizes the risk of ice, misting and stale air.

Activate the timer function as follows:

- Press for more than 3 seconds. The LED flashes for 5 seconds. The air recirculates in the vehicle for 3-12 minutes depending on the outside temperature.
- The timer function is activated each time you press .

To switch off the timer function:

- Press again for more than 3 seconds. The LED lights for 5 seconds to confirm your selection.

Recirculation is always disconnected when you select Defroster .

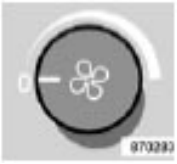

Blower

Blower speed can be increased or decreased by turning the knob. If the knob is set to 0, the air conditioning function is automatically disengaged.

Temperature

Turn the control to set the temperature for the driver's and passenger's sides of the vehicle. For cooler air, the air conditioning function must be engaged.

pg. 82 Climate

Manual climate control with air conditioning, A/C

Air distribution

Use the air distribution control positions (marked with dots) between the different symbols to fine-tune air distribution for maximum comfort.

Air distribution	Use
Air through front and rear air vents.	When you want good cooling in warm weather.
Defrost. Air is not recircu-lated in this position. Air condi-tioning is always connected (if the blower is not set to position 0). There is a certain amount of airflow to the air vents.	When you want to remove ice and fog from the windshield.
Air to both floor and windows. There is a certain amount of airflow to the air vents.	When you want comfortable conditions and good demisting in cold weather.
Air to floor. There is a certain amount of airflow to the air vents and the defroster vents for the windshield and side windows.	When you want to warm your feet.
Air to floor and air vents.	In sunny weather with cool outside temperature.

Contents | Top of Page

Climate control systems - general information 74
Air distribution 75

Electronic climate control, ECC 76

Manual climate control with air conditioning, A/C 80

2 0 0 7
VOLVO
XC70

Interior

pg. 83 Interior

Front seats	84
Interior lighting	88
Storage compartments	90
Rear seat folding table (option)	94
Extending the cargo area	95
Cargo area	100

pg. 84 Interior

Front seats

Manually adjusted front seats

1. Front-rear adjustment: lift the bar and move the seat to the position of your choice.
2. Raise/lower the front edge of the seat cushion (option): use the control to pump the front edge of the

cushion up or down.
3. Raise/lower seat height: pump the seat up or down.
4. Lumbar support: turn the control for firmer or softer lumbar support.
5. Backrest tilt: turn the control to adjust the angle of the backrest.
6. Control panel for optional power seat (see page 86 for more information).

WARNING!

- Do not adjust the seat while driving. The seat should be adjusted so that the brake pedal can be depressed fully. In addition, position the seat as far rearward as comfort and control allow.
- Check that the seat is securely locked into position after adjusting.

pg. 85 Interior

Front seats

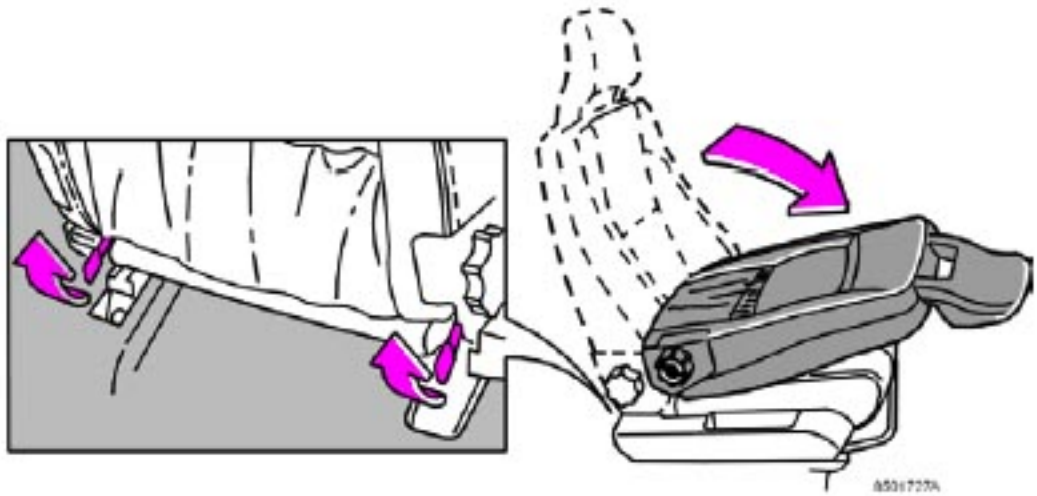

Folding the backrests in the front seat
The front passenger seat backrest can be folded to a horizontal position to make room for a long load.
Fold the backrest as follows:
- Move the seat as far back as possible.
- Adjust the backrest to the upright position.
- Lift the catches on the rear of the backrest.
- Without releasing the catches, push the backrest forward.
- Move the seat as far forward as possible so that the head restraint slides under the glove compartment.

WARNING!

Cover sharp edges on the load to help prevent injury to occupants. Secure the load to help prevent shifting during sudden stops.

pg. 86 Interior

Front seats

Power seat - (option on certain models)
Operation
Driver's seat: The seat can be adjusted if the ignition key is in position I, II or if the engine is running. It can also be adjusted as follows with **the ignition off**:

- Within several minutes after the driver's door has been unlocked from the outside, has been opened, and remains open.
- Within a short period if the driver's door has just been closed.
- Within a short period if the driver's door has not been opened after the ignition has been switched off.

Passenger seat: The seat can only be adjusted if the ignition key is in position I, II or if the engine is running.

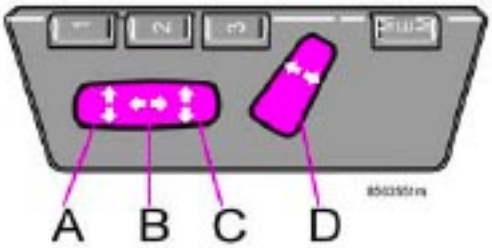

Power seat control panel

Seat adjustment
If your Volvo is equipped with power seats, the following may be adjusted with the two switches at the side of the seat:
A. Front edge of seat (raise/lower)
B. Front - rear
C. Rear edge of seat (raise/lower)
D. Backrest tilt

NOTE: The power seats have an overload protector that activates if a seat is blocked by any object. If this occurs, switch off the ignition (key in position 0) and wait for a short period before operating the seat again.

Emergency stop
If the seat accidentally begins to move, press any of the buttons to stop the seat.

NOTE: Please refer to the following page for information on programming the memory function in the driver's seat.

Remote keyless entry system and the driver's seat
The remote control transmitter also controls the position of the electrically operated driver's seat in the following way:
- Adjust the seat to your preferences.
- When you leave your vehicle, lock it using the remote control.
The position of the seat is now stored in the remote control.

Automatic seat adjustment
To move the seat to the position in which you left it:
- Unlock the driver's door with the same remote control (the one used to lock the doors).
- Open the driver's door within 2 minutes.
The driver's seat will automatically move to the position in which you left it.

NOTE:
- The seat will move to this position even if someone else has moved it to a different seating position and locked the vehicle with a different remote control.

pg. 87 Interior

Front seats

- This feature will work in the same way with all of the remote control transmitters (up to 3) that you use with your vehicle.
- This feature will not function if your lock your vehicle with the key.

WARNING!

- Because the driver's seat can be adjusted with the ignition off, children should never be left unattended in the vehicle.
- Movement of the seat can be STOPPED at any time by pressing any button on the power seat control panel.
- Do not adjust the seat while driving. The seat should be adjusted so that the brake pedal can be depressed fully. In addition, position the seat as far rearward as comfort and control allow.
- The seat rails on the floor must not be obstructed in any way when the seat is in motion.

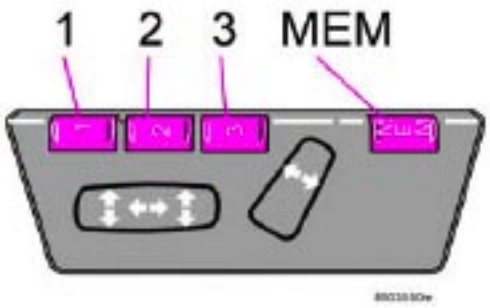

Programming the memory (option)
Three different seating and door mirror positions can be stored in the driver seat's memory.
The following example explains how button 1 can be programmed. Buttons 2 and 3 can be programmed in the same way.
To program (store) a seat position in button 1:
- Move the seat to the desired position using the seat adjustment controls (see the previous page).
- Press and hold down the MEM (memory) button.
- With the MEM button depressed, press button 1 briefly to store the seat's current position.

To move the seat to the position that it was in when button 1 was programmed:
Press and hold down button 1 until the seat stops moving.
As a safety precaution, the seat will stop automatically if the button is released before the seat has reached the preset position.

pg. 88 Interior

Interior lighting

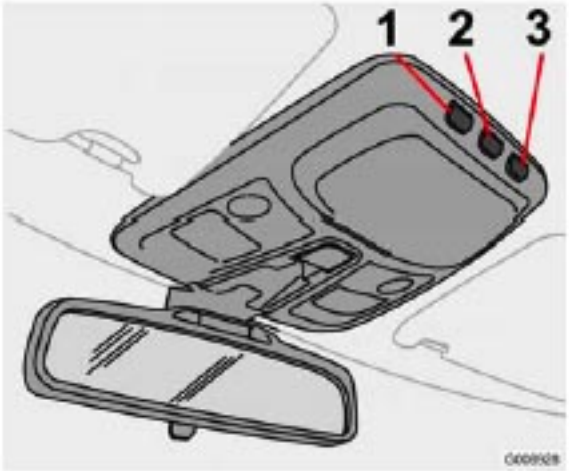

Reading lights and courtesy light

1. Driver's side front reading lamp
2. Courtesy lights
3. Passenger's side front reading lamp

The reading lights can be switched on or off by pressing buttons 1 or 3.
The courtesy light can be turned on or off by pressing button 2.

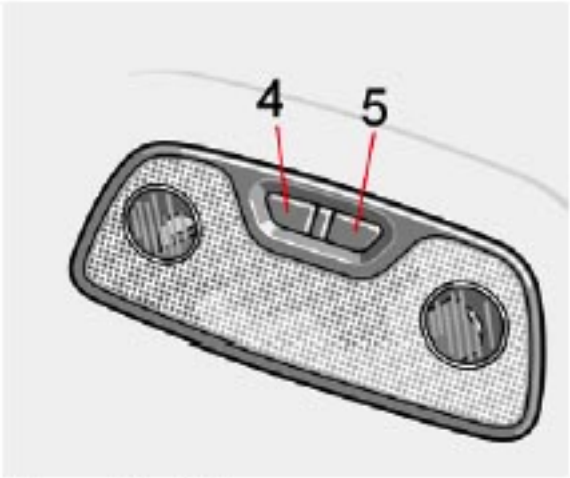

Rear reading lights

4. Driver's side rear reading light
5. Passenger's side rear reading light

The rear reading lights can be switched on and off by pressing buttons 4 or 5.

Automatic function

The reading lights and courtesy lights will switch off automatically approximately 10 minutes after the engine has been turned off. The lights can be turned off sooner by pressing the respective buttons.
The courtesy lights come on automatically[1] and remain on for approximately 30 seconds when:

- The vehicle has been unlocked from the outside with the remote control or key
- If the engine has been switched off and the ignition key has been turned to position 0

The courtesy lights will come on and remain on for approximately 10 minutes when:
- One of the doors is opened (assuming the courtesy lighting has not previously been switched off)

The courtesy lighting will go off when:
- The engine is started
- The vehicle is locked from the outside with the remote control or key

The automatic function can be disconnected by pressing button 2 for more than 3 seconds.
Briefly pressing the button again automatically reconnects the function.
The courtesy light timer periods can be changed. Contact your Volvo retailer.

1. This function is light dependent and is only activated in dark conditions.

pg. 89 Interior

Interior lighting

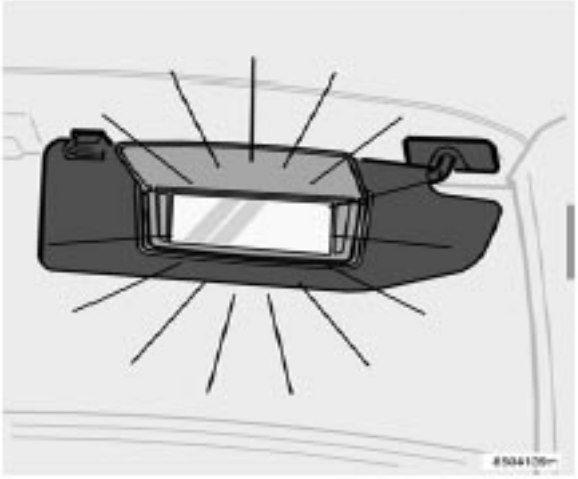

Vanity mirror
The light comes on when you open the cover.

Extra handgrip
The Volvo XC70 is equipped with an extra handgrip on the front passenger's side. This handgrip can be used for added support when travelling on unpaved roads, etc.

WARNING!

The handgrip may become very warm when the vehicle has been parked in strong sunlight.

pg. 90 Interior

Storage compartments

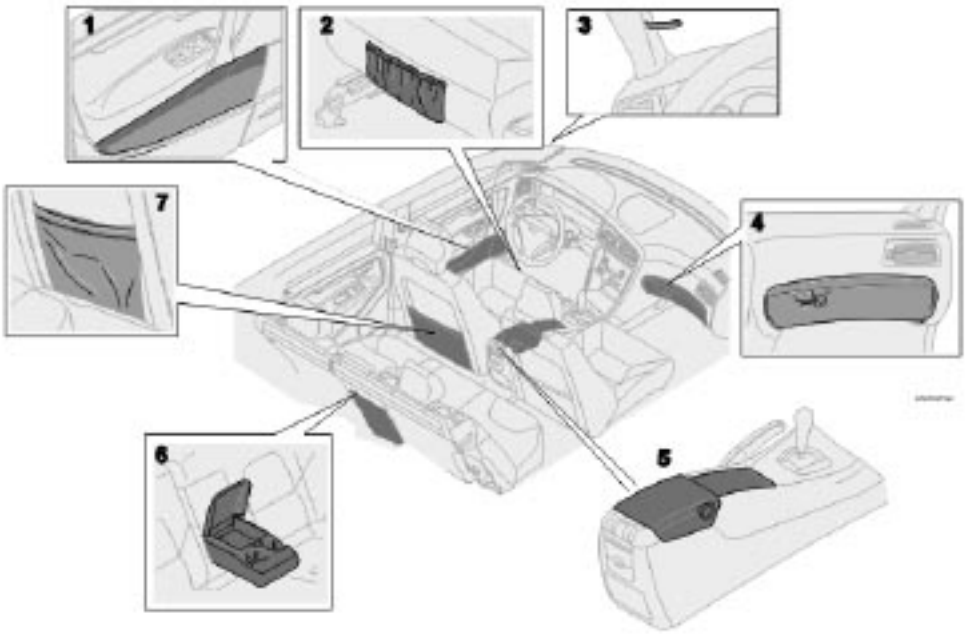

1. Storage compartment in door
2. Storage pocket in edge of front seat
3. Ticket clip
4. Glove compartment
5. Storage compartment and cup holders in center console (see the following page for more information)
6. Storage space and cup holders in rear seat armrest
7. Storage pocket in rear side of front seats

pg. 91 Interior

Storage compartments

WARNING!

Make sure that no hard, sharp, or heavy objects lie on or in any of the storage spaces where they might cause injury during sudden braking.

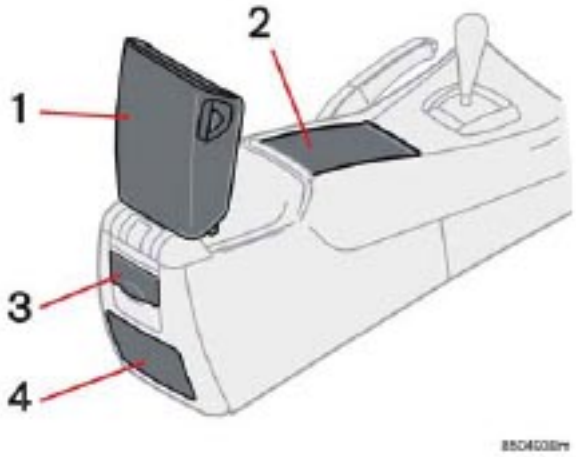

Storage compartments in the center console
1. Storage compartment cover
2. Front storage compartment
This storage space is fitted with a sliding cover (not on XC70 models)
3. 12-volt socket
4. Space for accessory ashtray

pg. 92 Interior

Storage compartments

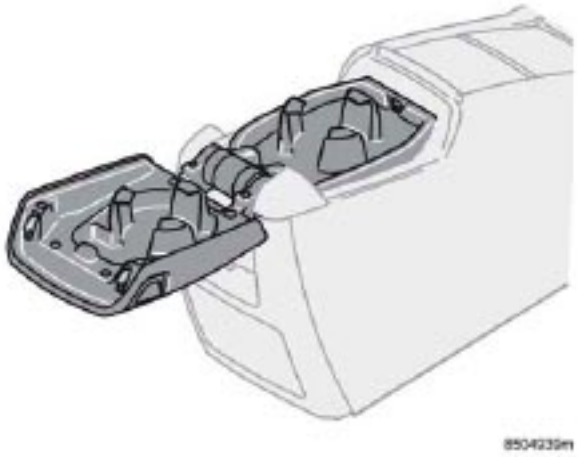

Cup holder for rear seat passengers
- To access the storage compartment, press the button on the left side of the armrest and fold the entire cover rearward.
- To open the rear seat cup holder, press the button on the right side of the armrest. Fold the upper section of the cover rearward.
The two sections of the cover can be closed separately.

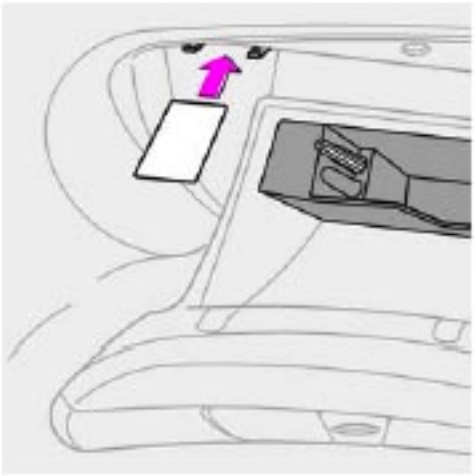

Storage in the glove compartment
The glove compartment has storage spaces designed specifically to hold credit cards, pens, and pencils.

pg. 93 Interior

Storage compartments

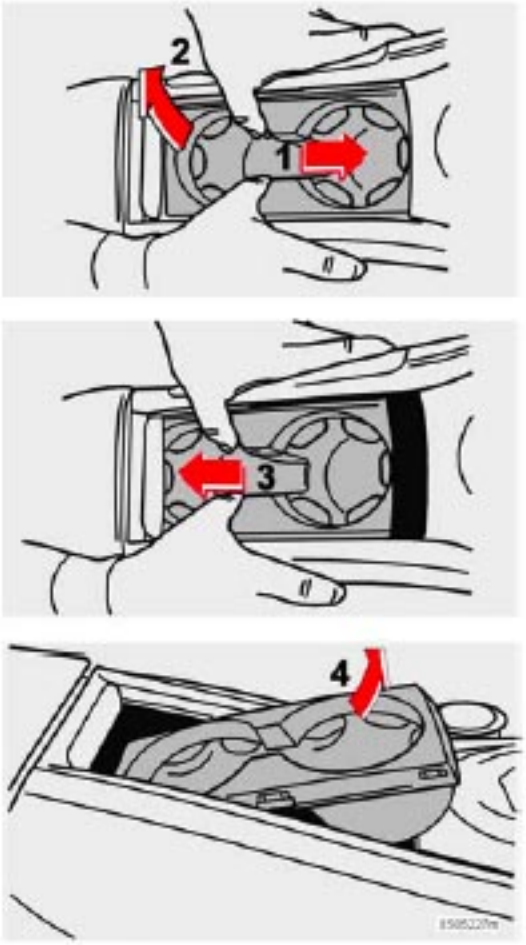

Removing the cup holder in the center console

Cup holders in the center console - V70
To remove the cup holders:
- Press the cup holder forward (1), while lifting the rear edge (2).
- Move the cup holder rearward (3), into the groove under the sliding cover.
- Angle the front edge of the cup holder upward (4) and lift it out.

Return the cup holder to the storage space in the reverse order.

Cup holders in the center console - XC70
To remove the cup holders:
- Grasp the rear edge of the cup holder and press in the rear side to release the rear edge.
- Pull up the cup holder's rear edge and the lift it out.

Return the cup holder to the storage space in the reverse order.
NOTE: Avoid pinching the parking brake gaiter.

Coat hanger
Use the coat hanger for light jackets, etc.

pg. 94 Interior

Rear seat folding table (option)

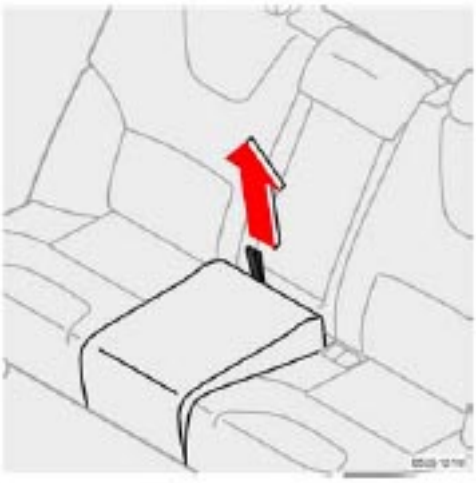

Folding Table
Folding out the table:
- Pull the tab and fold the seat cushion forward.

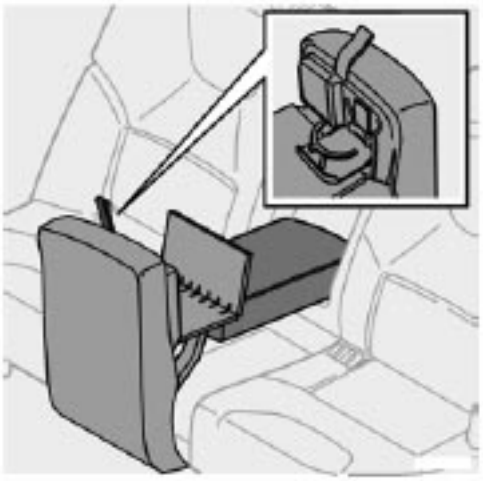

- Fold the center armrest forward.
- Fold out the table so that it rests on the seat cushion.
- Press to release the cup holder.

NOTE: It is not necessary to fold down the armrest if you only intend to use the cup holder.

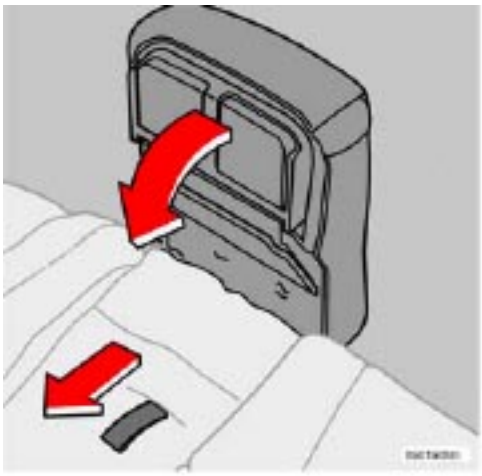

Stowing the table:
- Close the cup holder(s).
- Fold the table section upward into place.
- Fold the arm under the table inward.
- Pull the release and fold the table section back in place.

pg. 95 Interior

Extending the cargo area

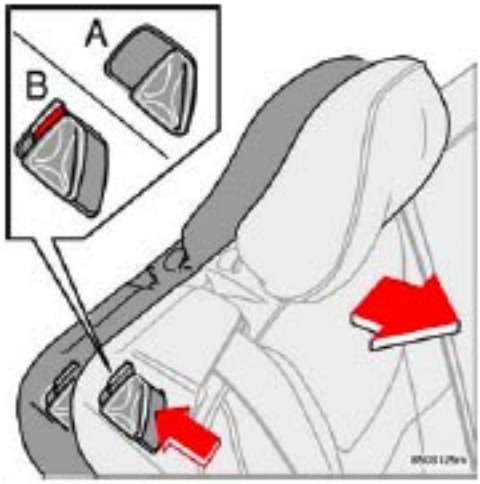

Changing the backrest angle

Rear seat backrest
To increase loading capacity, the angle of the rear seat backrest(s) can be adjusted to two positions while the backrest is in the upright position.
- Press the catch until the red mark is visible (B in the illustration above).
- Depending on the backrests' current angle, push or pull the backrest rearward/ forward to a new locked position.
- Make sure that the backrest is secured in a locked position and that the red mark is no longer visible (A in the illustration above).

Folding down the rear seat backrests
The rear seat is split in two sections and each section can be folded forward separately.

Before folding the backrests down:
- Adjust the front seat backrests to a more upright position if they are excessively reclined.
- Fold down the outboard head restraint(s) by pulling the strap at the base of the head restraint as shown in the inset illustration above.
- Pull the strap on the rear seat cushion and pull the cushion forward against the front seat backrests.

Adjusting the center head restraint
Models with a 2-section rear seat
Raise:
- Pull the head restraint up.
Lower:
- Hold down the release button behind the right head restraint support and press the head restraint down.

Models with a 3-section rear seat
Raise:
- Pull the head restraint up.
Lower:
- Pull the head restraint slightly forward and press down.

pg. 96 Interior

Extending the cargo area

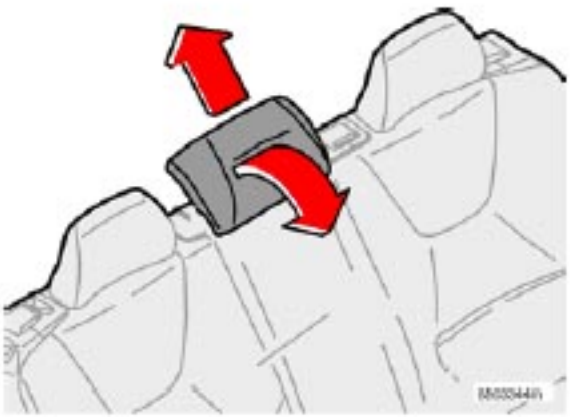

WARNING!

- Please note that the lowest head restraint position is only intended for use when the backrest is to be folded down, or when the seat is not occupied.
- The head restraint is intended to help protect the head/neck in a collision. Ensure that it is properly adjusted for the occupant of the seat.

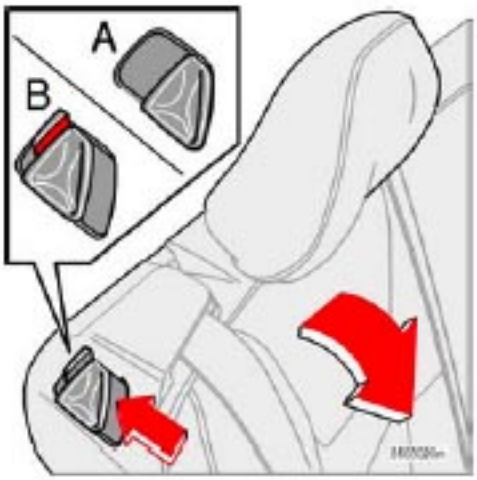

A–backrest in locked position. B–backrest not locked in position

Folding the outboard backrests down

Models with 2 or 3-section rear seat

Press the backrest catch to the rear as shown in the illustration above, and tilt the backrest forward.

A. Catch in closed position.

B. Catch in open position.

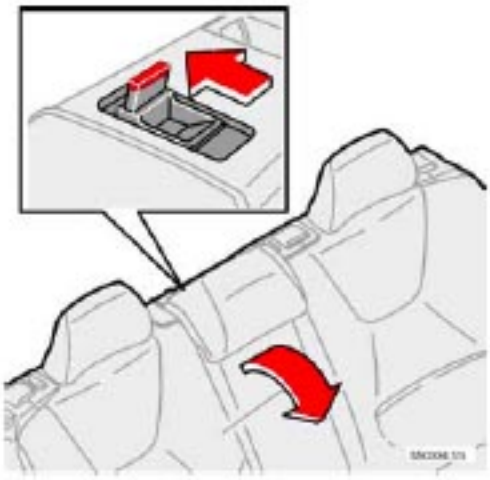

Models with the optional 3-section rear seat

To fold down the center section of the backrest (without folding down either of the outboard sections):

- Lower the head restraint (see previous page).
- Press the center section backrest catch to the rear and tilt the backrest forward.

(Contd. on next page)

pg. 97 Interior

Extending the cargo area

NOTE: Make sure that the holes in the plastic ferrules on the top of the backrest engage the hooks on the bottom of the seat cushion.
When you later raise the backrest and seat cushion, the head restraints must be returned to their normal positions.

WARNING!

- The red lock indicator is not visible when the backrest is correctly locked in place.
- The red lock indicator IS VISIBLE when the backrest is NOT locked in position (see the illustration on the previous page).
- The backrest must be securely locked when it is returned to the upright position. The word "UNLOCKED" on the lock indicator should not be visible.
- When the rear seat is folded down, do not place heavy objects against the backs of the front seats. This places a severe strain on the folded down backrest of the rear seat.
- Be sure to secure cargo. Cargo must not be stacked higher than the top of seat backs. This will reduce the possibility of luggage, etc. becoming projectiles during sudden maneuvers, rapid braking or an accident.

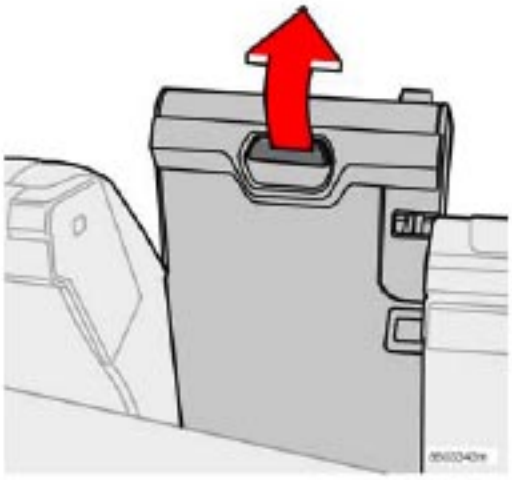

Removing the center backrest
Models with the optional 3-section rear seat
- Press the control at the top of the center section to the rear to release the locking mechanism.
- Fold the backrest section slightly forward.
- Pull up on the handle at the upper rear side of the backrest (see illustration above) to release this section of the backrest from the retaining bar at the base of the backrest.
- Lift out the backrest.

pg. 98 Interior

Extending the cargo area

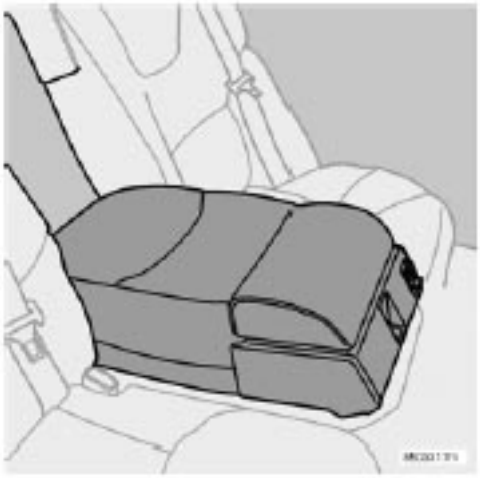

Center backrest used as an armrest

Using the center section as an armrest
The center section of the backrest can be reversed and used as an armrest.
- Remove the center backrest as described on page 97.
- Turn the backrest so that the front side faces up (see illustration above).

- Press the backrest back onto the retaining bar until it locks in place.
To return the backrest to its normal position, pull the handle (which is now at the front, on the underside) to release the backrest from the retaining bar. Return the backrest to the normal position as described in the right column.

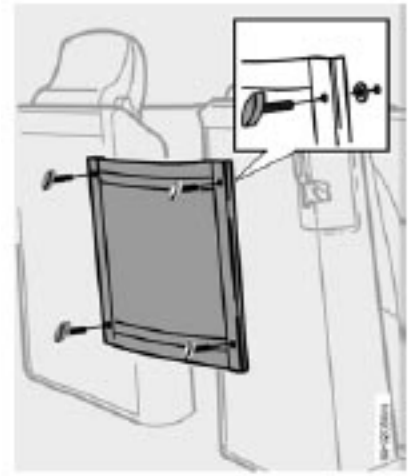

Partition with storage pockets (accessory)
A partition with storage pockets is available as an accessory on V70 models with a 3- section rear seat. This partition can help prevent objects in the cargo area from being thrown forward when the center section of the backrest is not in the upright position.
Please refer to the installation instructions that are included with the partition or consult your Volvo retailer.

Returning the center section of the backrest to its normal position
- Before the center section is put back in place, the right section of the backrest must be locked in the upright position.
- Replace the backrest by pressing the bottom section onto the retaining bar until the backrest clicks into place.
- Fold up the backrest until it is securely locked in place.

WARNING!

- For safety reasons, the center section of the backrest or seat cushion should not be left in the vehicle after they have been removed.
- Please be aware that with the center section of the backrest removed, unanchored objects in the rear cargo area could be thrown forward between the outboard sections of the backrest in the event of a sudden stop.
- When the center section of the backrest is put back in place, the right-hand section of the backrest must be in the upright position in order to lock the center section securely in place and to be able to use the center seat belt.

pg. 99 Interior

Extending the cargo area

Removing a seat cushion
To make the loading space as flat as possible when the rear seat backrests are folded down, the rear seat cushions can be removed. To do so:
- Pull the strap on the rear seat cushion and pull the cushion forward toward the front seat backrests.
- Unlock the two red locking tabs.
- Lift out the seat cushion.

When replacing, do everything in reverse order. Make sure the red locking tabs are in the locked position when the seat cushion has been put back into place.

pg. 100 Interior

Cargo area

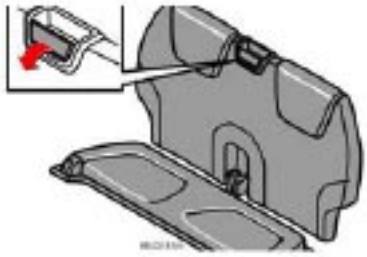

Auxiliary rear-facing child seat (option)
The auxiliary seat is designed to hold two belted occupants who each weigh:
- In U.S.A.: between 66-88 lbs (30-40 kg), and who are not taller than 55 inches (140 cm).

- In Canada: between 50-88 lbs (23-40 kg), and who are not taller than 55 inches (140 cm).

Using the auxiliary seat with smaller occupants

- In the U.S.A: children who weigh between 33-66 lbs (15-30 kg), and who are not taller than 47 inches (120 cm) may occupy the auxiliary seat only together with a booster cushion that meets U.S. government safety standards.
- In Canada: children who weigh between 41-66 lbs (18.5-30 kg), and who are not taller than 47 inches (120 cm) may occupy the auxiliary seat only together with a booster cushion that meets Canadian government safety standards.

WARNING!

A booster cushion's detachable backrest must not be used in conjunction with the auxiliary seat, and should be removed.

Install the auxiliary seat correctly in accordance with the installation instructions provided with the seat.

Raising the seat

- Remove the cargo area cover, if installed, from the vehicle. Raise the backrest section forward until it locks in place.
- Flip the seat cushion over.

Stowing the seat

- Flip the seat cushion back into storage position.
- Pull the release handle and lower the backrest to storage position.

NOTE:

- If you have locked the vehicle with the remote control and if you then afterwards use a key in the tailgate's lock cylinder (certain models) to unlock the tailgate only, the alarm will sound. See page 116 for information on turning off a sounding alarm.
- Please also refer to the decal located on the auxiliary seat for further information on using this seat.
- Canadian models: other regulations apply for the use of the auxiliary seat in Canada. Please refer to the decal on the seat.

WARNING!

- If your vehicle is equipped with an auxiliary seat (option or accessory), the tailgate must be fitted with a lock cylinder. Unlocking from the outside can then be carried out in the usual way (key in driver's door and/or remote control) and also by using the key in the tailgate.
- All rear seat backrests must be up when the auxiliary seat is being used.
- The auxiliary seat's head restraint(s) should be properly positioned to help provide the best support.
- The seat belt(s) should be properly fastened.
- The accessory steel cargo grid should never be mounted in the vehicle when the auxiliary seat is used. See page 104 for instructions on removing the steel grid.
- The luggage net should be retracted.
- The child safety lock in the tailgate should be on to prevent children from inadvertently opening the tailgate from the inside.
- Failure to follow each of the instructions above will increase the risk of occupants being injured during a sudden stop or collision.

pg. 101 Interior

Cargo area

Holder for grocery bags (option)
- Open the tailgate.
- Lift the hatch in the cargo area floor to fold up the grocery bag holder.
- Hang or secure your grocery bags by means of tensioning straps or holders.

To remove the plastic tray (option), turn the two knobs at the sides.

Cargo area lighting
An extra roof lamp is fitted at the end of the cargo area.

Auxiliary 12 Volt socket in cargo area (option)
Fold down the cover when you want to use the electric socket.

NOTE: The socket is live whether the ignition is switched on or off. Using the socket without the engine running can drain your vehicle's battery.

pg. 102 Interior

Cargo area

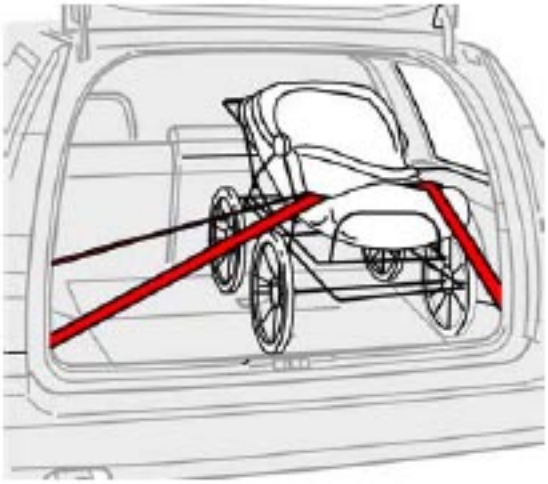

Securing cargo

As a safety precaution, your vehicle is equipped with four eyelets in the cargo space to which straps can be attached to secure luggage.

WARNING!

- The eyelets for securing cargo are not to be used as passenger restraints or as anchorages for child restraints.
- Unless the vehicle is equipped with an optional Volvo auxiliary seat for children, passengers should not ride in the rear cargo area.

Keep the following in mind when loading the vehicle

The load carrying capacity of your vehicle is determined by factors such as the number of passengers, the amount of cargo, the weight of any accessories that may be installed, etc. See the section "Vehicle loading" in the chapter "Wheels and tires" for more detailed information.

- Remember that a 44 lbs object produces a force of 2,200 lbs in a head-on collision at 30 mph.

- Load the cargo against the backrest.
- Load heavy cargo as low as possible.
- Load wide cargo on either side of the rear seat split.
- If no one is sitting in the rear seat, reinforce the backrest by fastening the rear seat belts.
- Never load cargo above the backrest without a cargo net.

CAUTION!

If an auxiliary seat is installed in the vehicle, it should be stowed before loading cargo. The auxiliary seat is not designed to carry or restrain cargo.

WARNING!

When the rear seat backrest(s) are folded down, the vehicle should not be loaded to a level higher than 2 in. (5 cm) below the upper edge of the rear passenger door windows. Objects placed higher than this level could impede the function of the inflatable curtain.

pg. 103 Interior

Cargo area

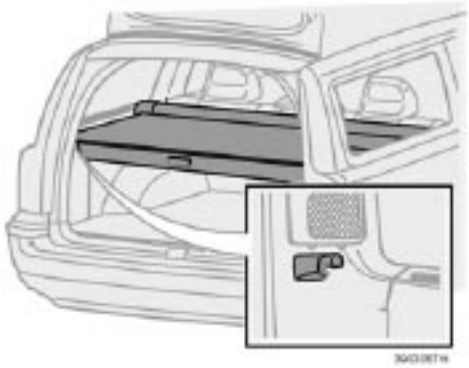

Cargo area cover (option or accessory)[1]
Withdraw the cargo area cover, pull it over the luggage compartment and hook it in the holes in the rear cargo area pillars.

Removing the cargo area cover:
- Press the end pieces of the cargo area cover inward, pull up and remove.

- To fit in place: Press the end pieces of the cargo area cover down into the holders.

NOTE: The cargo area cover must be removed before the optional auxiliary seat in the cargo area (see page 76) is used.

1. Not available on models equipped with the optional cargo area auxiliary child seat.

pg. 104 Interior

Cargo area

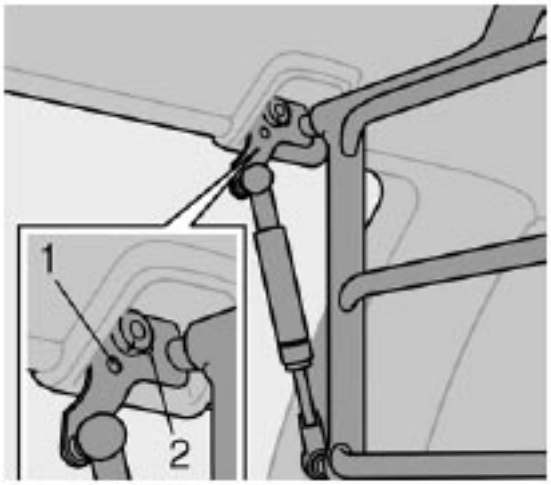

Steel grid

Steel grid (accessory)
To remove the steel grid:
- Fold down the entire rear seat backrest.
- Press and turn the knobs on opposite ends of the steel grid with a torx screwdriver until the marks on the knobs are aligned with red dots (1 in the inset illustration above).
- The steel grid is spring loaded. Push the grid toward the left (driver's) side of the vehicle to release it from the retaining bracket on the opposite side. Keep the grid straight when performing this step so that it does not become wedged in place.
- Pull the opposite end of the grid out the retaining bracket.

WARNING!

When the steel grid is installed, make sure that the marks on the knobs are aligned with the green dots (2 in the inset illustration in the left column), which indicates that the grid is locked in place.

To install the steel grid, perform the steps in the reverse order.

pg. 105 Interior

Cargo area

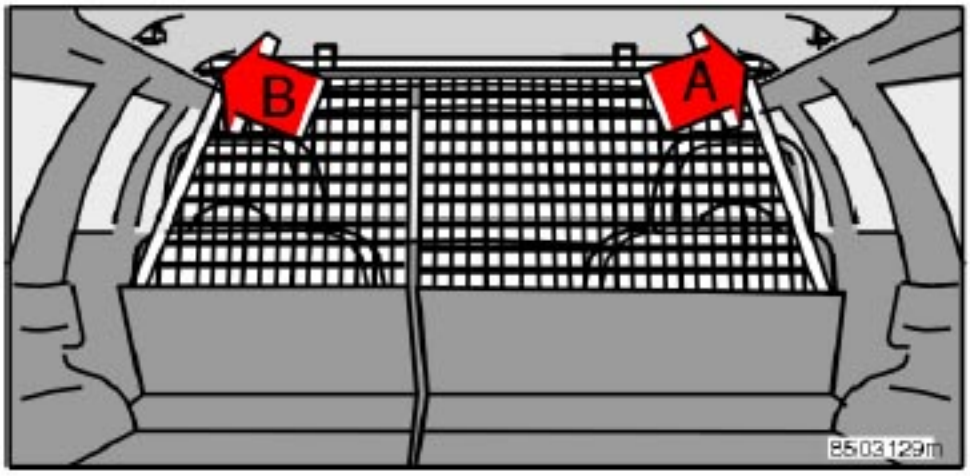

Cargo net (accessory)
Models with 2-section rear seat
Your vehicle can be equipped with a cargo net made of strong nylon fabric that can be unrolled from the rear seat backrest. After being unrolled, the cargo net self-locks after about a minute.
- Pull up the right-hand cargo net.
- First hook the rod in the bracket on the right-hand side (A). Then pull the rod out and hook it on the left-hand side (B).
- Pull up the left-hand cargo net and secure it to the rod.
To remove, proceed in reverse order.

NOTE:
- Make sure that the cargo net is securely fastened in the hooks. To remove, proceed in reverse order.
- The cargo net can also be used when the rear seat is folded forward.

pg. 106 Interior

Cargo area

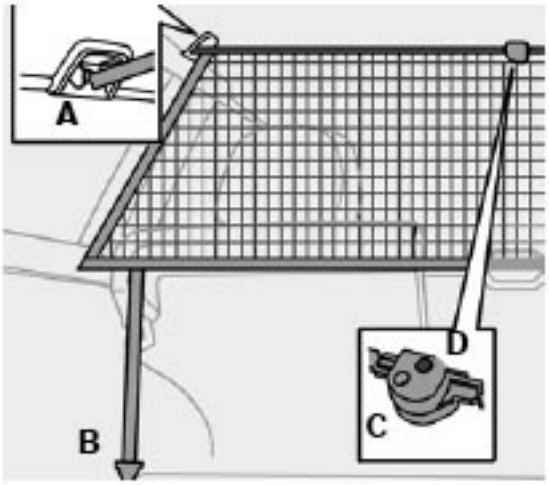

C-Hinge, D-Button

Nylon cargo net (accessory)
The Volvo XC70 can be equipped with a cargo net made of strong nylon fabric that can be installed with the rear seat backrests in the upright position or folded down.
The upper and lower rods of the cargo net are hinged. If the cargo net is folded, fold the rods until they are straight and lock in position.

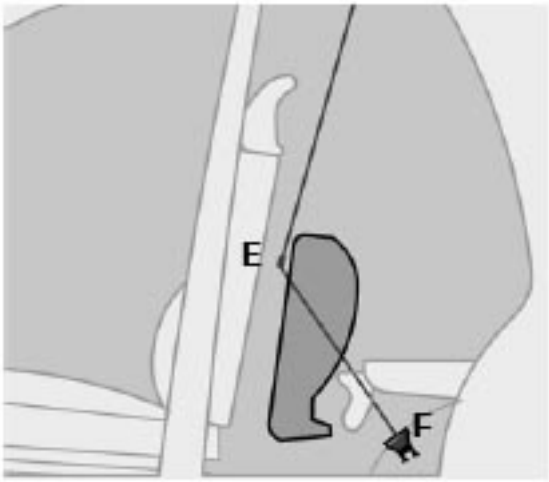

- Insert the end of the upper rod in the bracket (A,) near the ceiling liner in the cargo area if the rear seat backrests are up or in the brackets above the rear passenger doors if the backrests are folded down.
- Insert the opposite side of the rod in the upper bracket on the opposite side.
- Attach the lower straps to the eyelets on opposite sides of the rear cargo area (B) if the rear seat backrest is upright, or to the eyelets near the base of the rear seat, (F) if the backrest sections are folded down and the upper rod has been attached to the forward brackets. Adjust the straps to pull the net taut.

Folding and storing the cargo net
The cargo net can be folded and stored under the floor of the cargo area on vehicles not equipped with the optional auxiliary rear-facing child seat or the optional bass speaker.
Press the buttons (D) on the hinges (C)at the center of the upper and lower rods. This releases the hinges so that the net can be folded.

CAUTION!

If the net is installed in the forward position and the rear seat cushions are folded forward, the net should be positioned so that it is in front of the rear seat cushions but behind the front seat backrests (E).
The eyelets on the floor of the vehicle under the front seats must not be used to secure the lower straps of the cargo net. If these eyelets are used and the front seats are moved back, the cargo net or upper brackets may be damaged.

pg. 107 Interior

Cargo area

WARNING!

- The nylon cargo net must not be used when the optional rear-facing auxiliary child seat in the cargo area is in use.
- When not in use, the cargo net should not be stored unattached in the vehicle to prevent it from being thrown forward in the event of a sudden stop etc.

pg. 108 Interior

This page left intentionally blank.

Contents | Top of Page

2 0 0 7
VOLVO
XC70

Locks and alarm

pg. 109 Locks and alarm

Keys	110
Remote control	111
Locking and unlocking	114
Child safety locks	115
Alarm	116

pg. 110 Locks and alarm

Keys

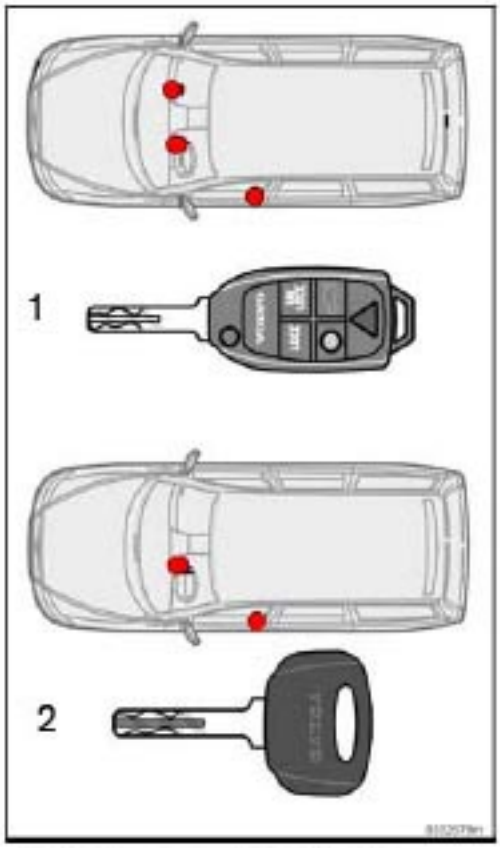

1. Master key: operates all locks
2. Service key: Unlocks the driver's door, steering wheel lock, and starts the engine.

Two types of keys are provided with your vehicle; master keys and a service (valet) key. The master key, the remote control, and the central locking button may all be used to lock and unlock all of your vehicle's locks.
The service key will operate only the driver's door and the ignition switch. It is intended to help deter unwanted entry into the glove compartment.

- Turn the key once to unlock the **driver's door only**.
- Turn the key again (within 10 seconds) to unlock all doors and the tailgate.
- One turn with the key towards lock in the drivers door locks all doors and the tailgate.
- Use the switch on the driver's door armrest to lock/unlock the vehicle from the inside.

WARNING!

If the doors are locked while driving, this may hinder rapid access to the occupants of the vehicle in the event of an accident. (Also see information on "Child safety locks").

NOTE: To help prevent accidentally locking the keys in the vehicle, the central locking system is designed to unlock the doors immediately if the key is left in the ignition switch, the vehicle is locked

using the lock button on the door and the door is then closed. A sound from the lock will be audible at this time.
Please note that this function will not unlock the doors if the engine is running.

Immobilizer (start inhibitor)
Each of the keys supplied with your vehicle contains a coded transmitter. The code in the key is transmitted to an antenna in the ignition switch where it is compared to the code stored in the start inhibitor module. The vehicle will start only with a properly coded key.
Each key has a unique code, which your Volvo retailer uses if new keys are required. A maximum of six remote controls/keys can be programmed and used for one vehicle.
If you misplace a key, take the other keys to an authorized Volvo retailer for reprogramming as an antitheft measure.

NOTE: This device complies with part 15 of the FCC rules. Operation is subject to the following condition: (1) This device may not cause harmful interference, and (2) this device must accept any interference received, including interference that may cause undesired operation.

pg. 111 Locks and alarm

Remote control

Your vehicle is equipped with two coded remote control transmitters with integrated ignition keys called Key Integrated Remote (KIR). These transmitters use a radio frequency that will enable you to lock/ unlock all doors and the tailgate from a distance of 10-15 feet (3-5 meters).
The transmitters will also activate or allow "keyless" entry into the passenger compartment or the tailgate. They will also activate or deactivate your vehicle's alarm system(s). The vehicle can also be locked/ unlocked with the key.
If one of the transmitters is misplaced, contact your nearest authorized Volvo retailer for replacement.

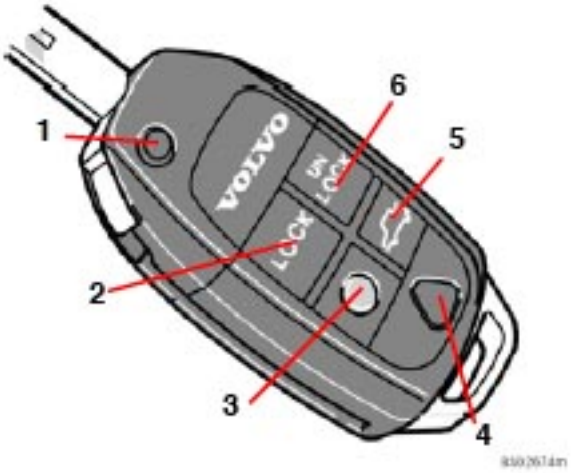

1. Fold key in/out
2. Lock
3. Approach lighting
4. "Panic" function
5. Unlock tailgate
6. Unlock

Using the remote control

Button 1: Press to extend the key. This button must also be pressed when the key is folded back into the slot in the side of the remote control unit.

Button 2 (Lock): Press once to lock all doors, and the tailgate.

Button 3 (Approach lighting): Press this button when approaching the vehicle at night to light up the interior courtesy light, parking lights, and license plate lights.

Button 4 (Panic): See page 116 for more information on this function.

Button 5 (Unlock tailgate): Press this button to unlock the tailgate (without unlocking the other doors).

NOTE: This function does not open the tailgate.

Button 6 (Unlock): Press this button once to unlock the driver's door only. Wait for at least 1 second and press the button again (within 10 seconds) to unlock all doors, and the tailgate.

NOTE:

- If an airbag deploys, your vehicle's SRS control module will attempt to automatically unlock all doors.
- The keys may also be used to lock and unlock the doors, and to activate and deactivate the alarm system.
- To avoid leaving your keys in the vehicle, make a habit of always locking the vehicle with the remote control.
- If the key blade section of the remote is not fully folded out when starting the vehicle, the immobilizer function may make it impossible to start the engine.

pg. 112 Locks and alarm

Remote control

- The vehicle can be locked even if a door is open. When the door(s) are closed, they will be locked. Please be aware that the keys could be locked in the car when this is done.

Automatic re-locking
If the doors are unlocked, the locks will automatically reengage (re-lock) and the alarm will rearm after 2 minutes unless a door or the tailgate has been opened. This helps prevent the car from inadvertently being left unlocked.

- **FCC ID:LQNP2T-APU**

This device complies with part 15 of the FCC rules. Operation is subject to the following conditions: (1) This device may not cause harmful interference, and (2) this device must accept any interference received, including interference that may cause undesired operation.

- **Canadian 2306104388** Model 504 2927 by Donnelly

Operation is subject to the following conditions: (1) this device may not cause interference, and (2) this device must accept any interference, including interference that may cause undesired operation of the device.

- **Canadian 2306104388A** Model 509 977 by Connaught Electronics

Operation is subject to the following conditions: (1) this device may not cause interference, and (2) this device must accept any interference, including interference that may cause undesired operation of the device.

WARNING!

Never use the transmitter to lock the doors from inside the vehicle. Doing so would ACTIVATE:

- the break-in alarm, which would sound if one of the doors were opened
- the optional interior motion and inclination alarm sensors.

Doing so would DEACTIVATE:
- the moonroof and interior courtesy light controls.
- the central locking buttons on the front door armrests, although the interior door handles would still function to allow occupants to leave the vehicle.

Disabled features would remain disabled until the remote is used again to unlock the vehicle.
In addition, locking an occupied vehicle would hinder rapid access to the occupants in an accident or

emergency.

pg. 113 Locks and alarm

Remote control

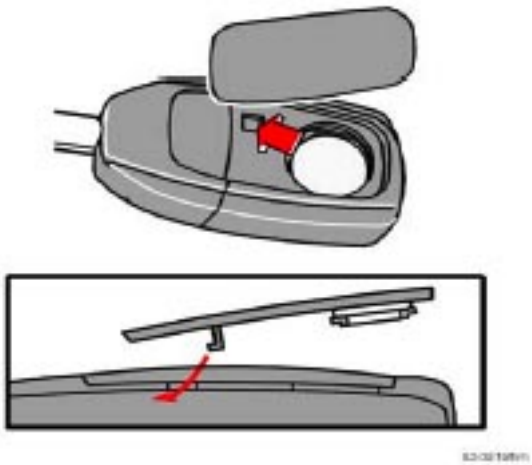

Replacing the battery in the remote control
If the range of the transmitter is noticeably reduced, this indicates that the battery is weak and should be replaced.

To replace the battery
- Carefully pry open the rear edge of the cover with a small screwdriver.
- Insert a new 3-volt, CR2032 battery, with the battery's plus side up. Avoid touching the contact surfaces of the battery with your fingers.
- Press the cover back into place. Ensure that the rubber seal is correctly positioned to help keep out moisture.

NOTE: The old battery should be disposed of properly at a recycling center or at your Volvo retailer.

pg. 114 Locks and alarm

Locking and unlocking

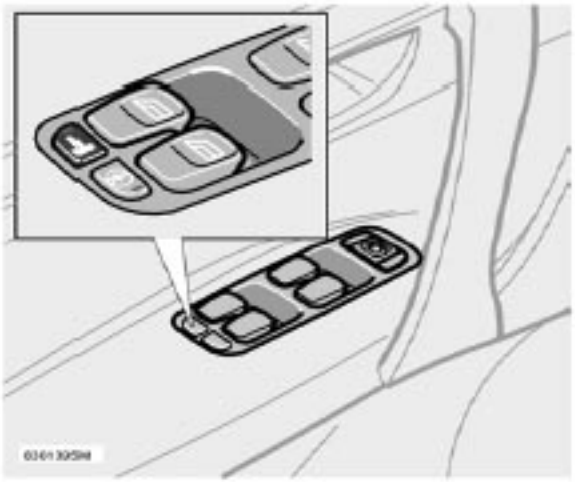

Locking and unlocking the vehicle from the inside
The switch on the driver's door armrest can be used to lock or unlock all doors and the tailgate, and to set the alarm.
Each door can also be locked with the lock button on the respective door and opened by pulling the door handle on the door.

Automatic locking
The function locks the doors automatically when the vehicle's speed exceeds approximately 5 mph (7 km/h). The doors will then remain locked until a door in opened from the inside or if all of the doors are unlocked from the control panel in the driver's door.
This function can be activated/deactivated from the control panel in the driver's door.

Activating/deactivating automatic locking
- Turn the ignition key to position I or II.
- Press the READ button on the left-side steering wheel lever to erase any messages that may be displayed in the information display.
- Depress the central locking button on the control panel until a new message about the locking status is displayed.
The message AUTOLOCK ON (the doors will be locked when the vehicle begins to move) or AUTOLOCK OFF will be displayed.

Unlocking/locking the tailgate with the remote control
Do as follows to unlock the tailgate only:
- Press the "Unlock tailgate" button on the remote control.
- Relock the tailgate using the remote's "Lock" button.
If all doors are locked when you close the tailgate, it locks automatically.

pg. 115 Locks and alarm

Child safety locks

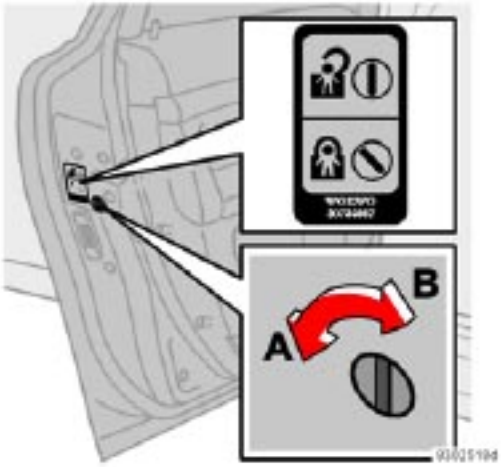

Control for child safety lock - left rear door

Manual child safety locks - rear doors

The controls are located on the rear door jambs. Use the ignition key or a screwdriver to adjust these controls.

A. The door cannot be opened from the inside. Normal operation from the outside.

B. The door lock functions normally.

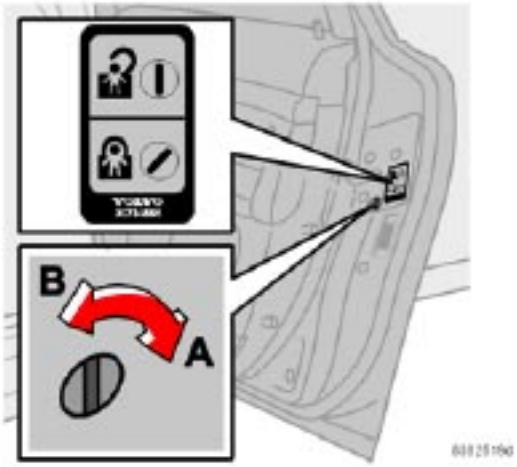

Control for child safety lock - right rear door

WARNING!

Remember, in the event of an accident, the rear seat passengers cannot open the doors from the inside with the buttons in position A.

Power child safety lock button

Power child safety locks (option)
To prevent the rear doors from being opened from the inside:
- Turn the vehicle's ignition key to at least position 1.
- Press the button shown above.

- Indicator light in the button ON: the doors cannot be opened from the inside. Normal operation from the outside.
- Indicator light in the button OFF: the doors can be opened from the inside.

NOTE: On vehicles equipped with the optional rear-facing auxiliary child seat in the cargo area, the child safety lock in the tailgate must be activated or deactivated manually.

pg. 116 Locks and alarm

Alarm

The alarm is automatically armed whenever you lock your vehicle.
When armed, the alarm continuously monitors a number of points on the vehicle. The following conditions will set off the alarm:
- The hood is forced open.
- The tailgate is forced open.
- A door is forced open.
- The ignition switch is tampered with.
- If there is movement in the passenger compartment (if the vehicle is equipped with the optional movement sensor).
- The vehicle is lifted or towed (if the vehicle is equipped with the optional inclination sensor).
- The battery is disconnected (while the alarm is armed).
- The siren is disconnected when the alarm is disarmed.

Arming the alarm
Press the LOCK button on the remote control, lock the vehicle using the key in the driver's door or press the central lock button on the driver's door with the door open. One long flash of the turn signals will confirm that the alarm is armed.

Disarming the alarm
Press the UNLOCK button on the remote control or unlock the doors with the key.

Turning off (stopping) the alarm
If the alarm is sounding, it can be stopped by pressing the UNLOCK button on the remote control or by unlocking the driver's door with the key.

Visual alarm signal
The visual alarm signal is given by flashing all turn signals and turning on the interior lighting for approximately 5 minutes.

Audible alarm signal
An audible alarm signal is given by a battery powered siren. One alarm cycle lasts for 25 seconds.

"Panic" button
In an emergency situation, this feature can be used to attract attention.
Activate the "panic" button by pressing the red button on the remote control (see illustration on page 111) for at least 3 seconds or by pressing this button twice within 3 seconds. The turn signals will flash, and the vehicle's horn will sound.
The function can be turned off by pressing any of the buttons on the remote control or will stop automatically after 25 seconds. When a button is pressed, there is a 5 second delay before the panic alarm is deactivated.

NOTE: This button will NOT unlock the vehicle.

pg. 117 Locks and alarm

Alarm

Temporarily turning off the inclination and movement alarm sensor(s) - accessory
This button will only be found in vehicles equipped with the accessory inclination and/ or movement sensors.

FCC ID: MAYDA5823
This device complies with part 15 of the FCC rules. Operation is subject to the following conditions: (1) This device may not cause harmful interference, and (2) this device must accept any interference received, including interference that may cause undesired operation.

Canadian IC: 4405A-DA5823
Movement sensor DA5823 by Dynex
Operation is subject to the following conditions: (1) this device may not cause interference, and (2) this device must accept any interference, including interference that may cause undesired operation of the device.

In certain situations it may be desirable to turn off the accessory inclination and movement alarm sensors if, for example, you drive your vehicle onto a ferry where the rocking of the boat could trigger the alarm or if a pet is left in the vehicle with the doors locked.
To temporarily turn off the inclination and movement alarm sensors from the alarm system:
From the time the ignition key is turned from the Drive position (position II) until you lock the vehicle, you can press the button in the center console. The LED in the switch will light up and a message will be displayed in the text window to indicate that the sensors are disconnected.
The vehicle can then be locked in the usual way to set the alarm.

NOTE:
- This function will not turn off the vehicle's standard alarm.
- The optional sensors are automatically reconnected to the alarm system the next time the vehicle is unlocked and then locked again.

LED alarm status signals
The status of the alarm system is indicated by the red LED at the top of the dash:
- LED off - the alarm is not armed
- LED flashes once per second - the alarm is armed
- LED flashes rapidly before the ignition is switched on - the alarm has been triggered
- **Fault in the alarm system**: If a fault has been detected in the alarm system, a message will be displayed in the text window. Contact your Volvo retailer.

Automatic re-lock/re-arm system
If the vehicle is unlocked with the remote, the vehicle will re-lock and the alarm will re-arm after 2 minutes unless a door or the tailgate has been opened.

pg. 118 Locks and alarm

This page left intentionally blank.

Contents | Top of Page

2 0 0 7
VOLVO
XC70

Starting and driving

pg. 119 Starting and driving

General information	120
Fuel requirements	121
Starting the car	125
General driving information	127
Manual transmission	129
Automatic transmission (option)	130
Geartronic (option)	132
All Wheel Drive (option)	134
Four-C active chassis system	135
Brake system	136
Stability system	139
Towing	142
Jump starting	144
Towing a trailer	145
Detachable trailer hitch	147
Load carriers (accessory)	148
Cold weather precautions	151
Before a long distance trip	152
Front/rear park assist (option/ accessory)	153

pg. 120 Starting and driving

General information

Engine oil
Although some oil consumption occurs during normal engine operation, more oil is consumed when the engine is new as the internal parts generate higher friction while wearing-in to each other. From the time the engine is new until the first service is performed, the oil consumption could be higher than normal. For this reason, it is especially important to check the oil every time you refuel your vehicle during this period. See page 175.

Fuel requirements
Deposit control gasoline (detergent additives)
Volvo recommends the use of detergent gasoline to control engine deposits. Detergent gasoline is effective in keeping injectors and intake valves clean. Consistent use of deposit control gasolines will help ensure good driveability and fuel economy. If you are not sure whether the gasoline contains deposit control additives, check with the service station operator.

NOTE: Volvo does not recommend the use of external fuel injector cleaning systems.

Unleaded fuel
Each Volvo has a three-way catalytic converter and must use only unleaded gasoline. U.S. and Canadian regulations require that pumps delivering unleaded gasoline be labelled "UNLEADED". Only these pumps have nozzles which fit your vehicle's filler inlet. It is unlawful to dispense leaded fuel into a vehicle labelled "unleaded gasoline only". Leaded gasoline damages the three-way catalytic converter and the heated oxygen sensor system. Repeated use of leaded gasoline will lessen the effectiveness of the emission control system and could result in loss of emission warranty coverage. State and local vehicle inspection programs will make detection of misfueling easier, possibly resulting in emission test failure for misfueled vehicles.

NOTE: Some U.S. and Canadian gasolines contain an octane enhancing additive called methyl-cyclopentadienyl manganese tricarbonyl (MMT). If such fuels are used, your Emission Control System performance may be affected, and the Check Engine Light (malfunction indicator lamp) located on your instrument panel may light. If this occurs, please return your vehicle to an authorized Volvo retailer for service.

Gasoline containing alcohol and ethers "Oxygenated fuels"
Some fuel suppliers sell gasoline containing "oxygenates" which are usually alcohols or ethers. In some areas, state or local laws require that the service pump be marked indicating use of alcohols or ethers. However, there are areas in which the pumps are unmarked. If you are not sure whether there is alcohol or ethers in the gasoline you buy, check with the service station operator. To meet seasonal air quality standards, some areas require the use of "oxygenated" fuel.
Volvo allows the use of the following "oxygenated" fuels; however, the octane ratings listed on this page must still be met.

Alcohol - Ethanol: Fuels containing up to 10% ethanol by volume may be used. Ethanol may also be referred to as Ethyl alcohol, or "Gasohol".
Ethers - MTBE: Fuels containing up to 15% MTBE may be used.

pg. 121 Starting and driving

Fuel requirements

Typical pump octane label

Octane rating
Volvo engines are designed to achieve rated horsepower, torque, and fuel economy performance using premium 91 octane fuel.
Volvo recommends premium for best performance, but using 87 octane or above will not affect engine reliability.
In demanding driving conditions, such as operating the vehicle in hot weather, towing a trailer, or driving for extended periods at higher altitudes than normal, it may be advisable to switch to higher octane fuel (91 or higher) or to change gasoline brands to fully utilize your engine's capacity, and for the smoothest possible operation.

Typical pump octane label

NOTE: When switching to higher octane fuel or changing gasoline brands, it may be necessary to fill the tank more than once before a difference in engine operation is noticeable.

Fuel Formulations
Do not use gasoline that contains lead as a knock inhibitor, and do not use lead additives. Besides damaging the exhaust emission control systems on your vehicle, lead has been strongly linked to certain forms of cancer.
Many fuels contain benzene as a solvent. Unburned benzene has been strongly linked to certain forms of cancer. If you live in an area where you must fill your own gas tank, take precautions. These may include:

- standing upwind away from the filler nozzle while refueling
- refueling only at gas stations with vapor recovery systems that fully seal the mouth of the filler neck during refueling
- wearing neoprene gloves while handling a fuel filler nozzle.

Use of Additives
With the exception of gas line antifreeze during winter months, do not add solvents, thickeners, or other store-bought additives to your vehicle's fuel, cooling, or lubricating systems. Overuse may damage your engine, and some of these additives contain organically volatile chemicals. Do not needlessly expose yourself to these chemicals.

WARNING!

Never carry a cell phone that is **switched on** while refueling your vehicle. If the phone rings, this may cause a spark that could ignite gasoline fumes, resulting in fire and injury.

pg. 122 Starting and driving

Fuel requirements

WARNING!

Carbon monoxide is a poisonous, colorless, and odorless gas. It is present in all exhaust gases. If you ever smell exhaust fumes inside the vehicle, make sure the passenger compartment is ventilated, and immediately return the vehicle to your retailer for correction.

WARNING!

Driving with the tailgate open: Driving with the tailgate open could lead to poisonous exhaust gases entering the passenger compartment.
If the tailgate must be kept open for any reason, proceed as follows:

- Close the windows
- Set the ventilation system control to air flow to floor, windshield and side windows and blower control to its highest setting.

pg. 123 Starting and driving

Fuel requirements

The fuel filler cap can be placed on the hook on the fuel filler door while refueling

Fuel filler door
Press the button on the light switch panel (see illustration on page 55) when the vehicle is at a standstill to unlock the fuel filler door. Please note that the fuel filler door will remain unlocked until the vehicle begins to move forward. An audible click will be heard when the fuel filler door relocks.
If you intend to leave your vehicle while it is being refueled, this feature enables you to lock the doors/ tailgate while leaving the fuel filler door unlocked.
You can also keep the vehicle locked if you remain inside it during refueling. The central locking button does not lock the fuel filler door. Be sure the fuel filler door is not obstructed and is completely closed after refueling.
Open the fuel filler cap slowly during hot weather.

NOTE: During a transitional period, a small number of service stations may still have fuel nozzles that

are not compatible with the fuel filler neck on vehicles equipped with the evaporative control system.

Refueling
The fuel tank holds approximately 18 US gal. (68 liters) with sufficient volume left over to accommodate possible expansion of the fuel in hot weather. Be aware that the "usable" tank capacity will be somewhat less than the specified maximum. When the fuel level is low, such factors as ambient temperature, the fuel's "Reid vapor pressure" characteristics, and terrain can affect the fuel pump's ability to supply the engine with an adequate supply of fuel. Therefore, it is advisable to refuel as soon as possible when the needle nears the red zone, or when the fuel warning light comes on.

pg. 124 Starting and driving

Fuel requirements

CAUTION!

- Do not refuel with the engine running[1]. Turn the ignition off or to position I. If the ignition is on, an incorrect reading could occur in the fuel gauge.
- After refueling, close the fuel filler cap by turning it clockwise until it clicks into place.[1]
- Avoid overfilling the fuel tank. Do not press the handle on the filler nozzle more than one extra time. Too much fuel in the tank in hot weather conditions can cause the fuel to overflow. Overfilling could also cause damage to the emission control systems.
- Avoid spilling gasoline during refueling. In addition to causing damage to the environment, gasolines containing alcohol can cause damage to painted surfaces, which may not be covered under the New Vehicle Limited Warranty.
- Do not use gasolines containing methanol (methyl alcohol, wood alcohol). This practice can result in vehicle performance deterioration and can damage critical parts in the fuel system. Such damage may not be covered under the New Vehicle Limited Warranty.

1. If the fuel filler cap is not closed tightly or if the engine is running when the vehicle is refueled, the Check Engine Light (malfunction indicator lamp) may indicate a fault. However, your vehicle's performance will not be affected. Use only Volvo original or approved fuel filler caps.

pg. 125 Starting and driving

Starting the car

Starting the engine
- Fasten the seat belt.

WARNING!

Before starting, check that the seat, steering wheel and mirrors are adjusted properly. Make sure the brake pedal can be depressed completely. Adjust the seat if necessary. See page 84 and 86.

- Apply the parking brake (hand brake) if not already set. The gear selector (automatic transmission) is locked in the (**P**)ark position (**SHIFTLOCK**). Manual transmission: the clutch must be fully depressed.
- Without touching the accelerator pedal, turn the ignition key[1] to the starting position. Allow the starter to operate for up to 10 seconds. Release the key as soon as the engine starts. If the engine fails to start, repeat this step.

NOTE:

- If the key blade section of the remote is not fully folded out when starting the vehicle, the immobilizer function may make it impossible to start the engine.
- After a cold start, idle speed may be noticeably higher than normal for a short period. This is done to help bring components in the emission control system to their normal operating temperature as quickly as possible, which enables them to control emissions and help reduce the vehicle's impact on the environment.
- For cold starts at altitudes above 6000 ft (1800 meters), depress the accelerator pedal halfway and turn the key to the starting position. Release the pedal slowly when the engine starts.
- To release the gear selector from the (**P**)ark position, the engine must be running (or the ignition key must be in position II) and the brake pedal must be depressed.
- Select the desired gear. The gear engages after a very slight delay which is especially noticeable when selecting R.

NOTE: Your vehicle is equipped with a **KEYLOCK** system (automatic transmission). When the engine is switched off, the gear selector must be in the (**P**)ark position before the key can be removed from the ignition switch.
When starting in cold weather, the transmission may shift up at slightly higher engine speeds than normal until the automatic transmission fluid reaches normal operating temperature.

1. If two of the keys to your vehicle are close together, e.g. on the same key ring, when you try to start the vehicle, this could cause interference in the immobilizer system and result in the vehicle not starting. If this should occur, remove one of the keys from the key ring before trying to start the vehicle again.

WARNING!

An extra mat on the driver's floor can cause the accelerator pedal to catch. Check that the movement of the accelerator pedal is not impeded. No more than one protective floor covering may be used at one time.

WARNING!

- Always place the gear selector in Park or in reverse on models with a manual transmission, and apply the parking brake before leaving the vehicle. Never leave the vehicle unattended with the engine running.
- Always open garage doors fully before starting the engine inside a garage to ensure adequate ventilation. The exhaust gases contain carbon monoxide, which is invisible and odorless but very poisonous

pg. 126 Starting and driving

Starting the car

CAUTION!

Automatic transmission
The engine should be idling when you move the gear selector. Never accelerate until after you feel the transmission engage! Accelerating immediately after selecting a gear will cause harsh engagement and premature transmission wear.
Selecting P or N when idling at a standstill for prolonged periods of time will help prevent overheating of the automatic transmission fluid.

Do not race a cold engine immediately after starting.

Ignition switch and steering wheel lock
0 - Locked position:
Remove the key to lock the steering wheel[1].

I - Intermediate position[2] - "radio position": Certain accessories, radio, etc. on, daytime running lights off.

II - Drive position: The key position when driving. The vehicle's entire electrical system is connected.

III - Start position: Release the key when the engine starts. The key returns automatically to the Drive position.

A chime will sound if the key is left in the ignition and the driver's door is opened.

Steering wheel lock
The steering wheel lock might be under tension when the vehicle is parked.
Turn the steering wheel slightly to free the ignition key.
In order to help reduce vehicle theft, make sure the steering wheel lock is engaged before leaving the vehicle.

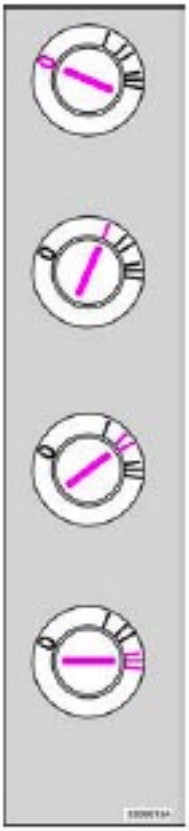

WARNING!

Never turn the key to position O while driving or when the vehicle is being towed.

1. The gear selector must be in the (**P**)ark position (automatic transmission).
2. Please be aware that leaving the key in this position will increase battery drain.

WARNING!

Never switch off the ignition (turn the ignition key to position 0) or remove the key from the ignition switch while the vehicle is in motion. This could cause the steering wheel to lock, which would make the vehicle impossible to steer.

pg. 127 Starting and driving

General driving information

Economical driving conserves natural resources
Better driving economy may be obtained by thinking ahead, avoiding rapid starts and stops and adjusting the speed of your vehicle to immediate traffic conditions. Observe the following rules:

- Bring the engine to normal operating temperature as soon as possible by driving with a light foot on the accelerator pedal for the first few minutes of operation. A cold engine uses more fuel and is subject to increased wear.
- Whenever possible, avoid using the vehicle for driving short distances. This does not allow the engine to reach normal operating temperature.
- Drive carefully and avoid rapid acceleration and hard braking.
- Do not exceed posted speed limits.
- Avoid carrying unnecessary items (extra load) in the vehicle.
- Maintain correct tire pressure. Check tire pressure regularly (when tires are cold).
- Remove snow tires when threat of snow or ice has ended.
- Note that roof racks, ski racks, etc, increase air resistance and also fuel consumption.
- Avoid using automatic transmission kickdown feature unless necessary.
- However, at higher driving speeds, fuel consumption will be lower with the air conditioning on and the windows closed than with the air conditioning off and the windows open.
- Using the onboard trip computer's fuel consumption modes can help you learn how to drive more economically.

Other factors that decrease gas mileage are:

- Dirty air cleaner
- Dirty engine oil and clogged oil filter
- Dragging brakes
- Incorrect front end alignment. Some of the above mentioned items and others are checked at the standard Maintenance Service intervals.

NOTE: Vehicles equipped with automatic transmissions should use (D)rive as often as possible and avoid using "kickdown" to help improve fuel economy.

CAUTION!

Drive slowly and carefully if going through standing water (i.e. flooded roadways, etc.). Damage to the engine could result if excess water is drawn in through the air intake system. Never drive the vehicle in water deeper than 1 foot (300 mm).

Weight distribution affects handling
At the specified curb weight your vehicle has a tendency to understeer, which means that the steering wheel has to be turned more than might seem appropriate for the curvature of a bend.
This ensures good stability and reduces the risk of rear wheel skid. Remember that these properties can alter with the vehicle load.
The heavier the load in the cargo area (max. 220 lbs, 100 kg), the less the tendency to understeer.

Handling, roadholding
Vehicle load, tire design and inflation pressure all affect vehicle handling. Therefore, check that the tires are inflated to the recommended pressure according to the vehicle load. See "Tire pressure" section.

pg. 128 Starting and driving

General driving information

Loads should be distributed so that capacity weight or maximum permissible axle loads are not exceeded.

Speed-sensitive power steering (Option on certain models)
With this feature, the steering is most responsive at lower speeds to make parking, driving in city traffic, etc., easier. The effect of the power steering diminishes as you accelerate for greater stability at highway speeds.

Driving through water
The vehicle can be driven through water up to a depth of approximately 9 in. (25 cm), at a maximum speed of 6 mph (10 km/h). Take particular care when driving through flowing water.
Clean the electrical connections for trailer wiring after driving in mud or water.
When driving through water, maintain low speed and do not stop in the water.

WARNING!

After driving through water, press lightly on the brake pedal to ensure that the brakes are functioning normally. Water or mud can make the brake linings slippery, resulting in delayed braking effect.

CAUTION!

- Engine damage will occur if water is drawn into the air cleaner.
- If the vehicle is driven through water deeper than 9 in (25 cm), water may enter the differential and the transmission. This reduces the oil's lubricating capacity and may shorten the service life of these components.
- Do not allow the vehicle to stand in water up to the door sills longer than absolutely necessary. This could result in electrical malfunctions.
- If the engine has been stopped while the car is in water, do not attempt to restart the engine. Have the car towed out of the water.

pg. 129 Starting and driving

Manual transmission

5-speed manual transmission

Depress the clutch pedal completely when changing gears[1].

Remove your foot from the clutch pedal while driving. The shift pattern should be followed. Overdrive (5th gear) should be used as often as possible to help improve fuel economy.

1. Clutch interlock

The clutch must be fully depressed before you can start your vehicle. If the clutch is not depressed, it will not be possible to start the engine.

6-speed manual transmission (option on certain models)
Fifth and sixth gears should be used as often as possible to help improve fuel economy.

WARNING!

An extra mat on the driver's floor can cause the accelerator pedal and/or the clutch pedal to catch. Check that the movement of these pedals is not impeded. Not more than one protective floor covering may be used at one time.

Engaging reverse gear
Never engage R while the vehicle is moving.

CAUTION!

Be careful to avoid inadvertently engaging reverse while moving forward.

pg. 130 Starting and driving

Automatic transmission (option)

P (Park)
Use this position when starting the engine or parking the vehicle.
Never use P while the vehicle is in motion.
The parking brake should be set whenever the vehicle is parked.
The gear selector is mechanically locked in the P position (SHIFTLOCK). To release the gear selector from this position, the engine must be running (or the ignition key must be in position II) and the brake pedal must be depressed.

WARNING!

Never leave the vehicle unattended when the engine is running. If, by mistake, the gear selector is moved from **P**, the vehicle may start moving.

R (Reverse)
Never engage R while the vehicle is moving.

N (Neutral)
Neutral - no gear engaged. Use the parking brake.

D (Drive)
D is the normal driving position and should be used as often as possible to help improve fuel economy. The vehicle should not be moving when shifting from **R** to the **D** position.

4 (Intermediate gear)
The transmission will shift automatically between gears 4, 3, 2 or 1 from this position. The transmission cannot shift up to (**D**)rive from fourth gear.

3 (Intermediate gear)
The transmission will shift automatically between gears 3, 2 and 1 from this position. The transmission cannot shift up to fourth gear or (**D**)rive from third gear.

L (Low gears)
The transmission is locked in gears 1 and 2 when the selector is in this position.

NOTE: Gears 4, 3, or L can be used if you are driving in a mountainous area, towing a trailer or to increase engine braking effect. The transmission has a built-in limiter designed to help prevent excessive engine speeds (high rpm) when gears 4, 3 or L are selected.

pg. 131 Starting and driving

Automatic transmission (option)

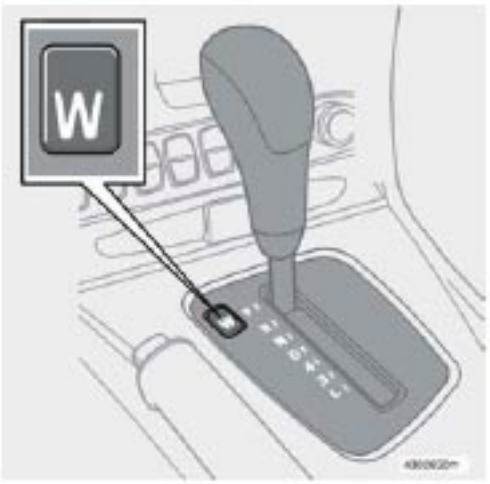

W - Winter/Wet driving mode - enhanced vehicle traction
- Mode W will only function if the gear selector is in the (**D**)rive position.
- Press the button at the base of the gear selector to engage/disengage this driving mode (see illustration).
- When the W driving mode is engaged, this is displayed in the instrument panel (see page 46).

- This mode may be selected for starting/ moving off on slippery roads.

NOTE: R-models are not equipped with this button.

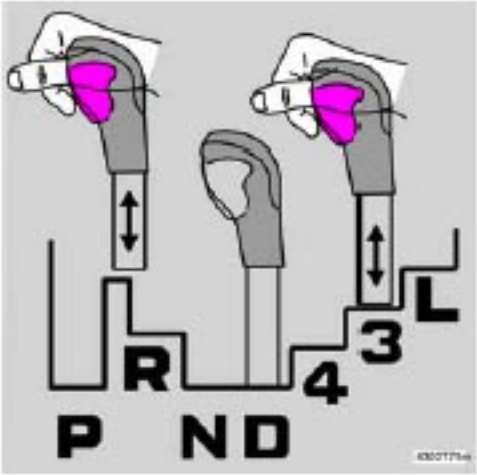

Shift gate positions
The gear selector can be moved freely between **N** and **D**. Depressing the button on the front of the gear selector knob enables you to move the gear selector to positions P, R, N, D, 4, 3 and L.

"Kickdown"
Automatic shift to a lower gear (kickdown) is achieved by depressing the accelerator pedal fully and briskly. An upshift will occur when approaching the top speed for a particular gear or by releasing the accelerator pedal slightly.
Kickdown can be used for maximum acceleration or when passing at highway speeds.

Cold starts
When driving before the engine has reached its normal operating temperature, the transmission will shift up at slightly higher engine speeds to heat the three-way catalytic converter as quickly as possible.

Automatic transmission - adaptive system
The automatic transmission is controlled by an adaptive control system that constantly monitors the way in which the transmission functions. It senses and adapts each gear shift for optimal performance.

pg. 132 Starting and driving

Geartronic (option)

P Park
Use this position when starting the engine or parking the vehicle.
Never use P while the vehicle is in motion.
The parking brake should also be set whenever the vehicle is parked.
The gear selector is mechanically locked in the P position (SHIFTLOCK). To release the gear selector from this position, the engine must be running (or the ignition key must be in position II) and the brake pedal must be depressed.

WARNING!

Never leave the vehicle unattended when the engine is running. If, by mistake, the gear selector is moved from P, the vehicle may start moving.

R (Reverse)
Never engage R while the vehicle is moving.

N (Neutral)
Neutral - no gear engaged. Use the parking brake.

D (Drive)
D is the normal driving position and should be used as often as possible to help improve fuel economy. The vehicle should not be moving when shifting from **R** to the **D** position.

Shift gate positions
You can move the gear selector freely between the (**MAN**)ual and (**D**)rive positions while driving. Depress the button on the front of the gear selector knob to move between the R, N, D, and P positions.

Manual shifting
You can move the gear selector freely between the (**MAN**)ual and (**D**)rive positions while driving. Gears 3, 4, 5, and 6 (where applicable) have a "lock-up" function which reduces engine speed and helps save fuel.
The currently selected gear will be displayed in the instrument panel (see page 46).

pg. 133 Starting and driving

Geartronic (option)

- To access the (**MAN**)ual shifting position from (**D**)rive, move the gear selector to the left to **MAN**.
- To return to the (**D**)rive position from **MAN**, move the gear selector to the right.

While driving
If you select the (**MAN**)ual position while driving, the gear that was being used in the (**D**)rive position will also initially be selected in (**MAN**)ual position.
- Move the gear selector forward (toward "+") to shift to a higher gear or rearward (toward "-") to shift to a lower gear.
- If you hold the gear selector toward "-", the transmission will downshift one gear and will utilize the braking power of the engine. If the current speed is too high for using a lower gear, the downshift will not occur until the speed has decreased enough to allow the lower gear to be used.
- If you slow down to a very low speed, the transmission will automatically shift down.
- When starting in the (**MAN**)ual position, 3rd gear is the highest gear that may be selected.

NOTE: Kickdown does not function when the transmission is in the manual shift (Geartronic) mode.

The gear selector must be in the D (Drive) position.

Kickdown
Automatic shift to a lower gear (kickdown) is achieved by depressing the accelerator pedal fully and briskly. An upshift will occur when approaching the top speed for a particular gear or by releasing the accelerator pedal slightly.
Kickdown can be used for maximum acceleration or when passing at highway speeds.
Kickdown does not function when the transmission is in the manual shift (Geartronic) mode.

W - Winter/Wet driving mode - enhanced vehicle traction
Please refer to the information on page 131.

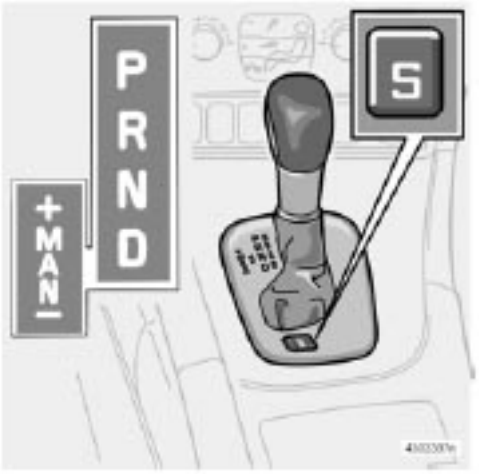

Sport mode (R-models only)
R-models are equipped with a (S)port button that can be used to engage/disengage the Sport shifting mode. An indicator light in the button will go on when Sport mode is engaged.
With Sport mode engaged, the transmission will shift up at higher rpm in first and second gears, and will also shift down at higher rpm for more immediate engine response during acceleration and deceleration.

pg. 134 Starting and driving

All Wheel Drive (option)

All Wheel Drive (AWD) - general information
Your Volvo can be equipped with permanent All Wheel Drive, which means that power is distributed automatically between the front and rear wheels. Under normal driving conditions, most engine's power is directed to the front wheels. However, if there is any tendency for the front wheels to spin, an electronically controlled coupling distributes power to the wheels that have the best traction.

Tire dimensions

Volvo recommends that you always drive on tires of the same brand, size, construction (radial), tread pattern, load-, speed-, traction- , temperature-, and treadwear rating. Never drive on mixed tires, except for brief periods when the temporary spare tire is in use.
Always use properly inflated tires of correct dimensions. Tire size and inflation pressures are shown on the tire inflation pressure placards, located on the driver's side B-pillar (the structural member at the side of the vehicle, at the rear of the driver's door opening), or on the inside of the fuel filler door on Canadian models.

Temporary Spare
The temporary spare tire is for temporary, low-speed, short-distance use only. Replace it with a full-sized tire as soon as possible. Do not drive on the temporary spare at speeds above 50 mph (80km/h) or for distances greater than 50 miles (80 km).
Never install snow chains on a temporary spare.

pg. 135 Starting and driving

Four-C active chassis system

Four-C active chassis
The FOUR-C (Continuously Controlled Chassis Concept) active chassis system, consisting of Comfort and Sport modes, is available as an option.

NOTE: The V70 R has a standard FOUR-C system consisting of Comfort, Sport, and Advanced sport modes. The buttons for controlling these driving modes are located in center instrument panel, above the ventilation system panel vents, see the illustration in the right column. These buttons can be pressed at any time to change driving modes. An indicator light in the selected button will come on to indicate the driving mode that is currently selected.
This system is based on a number of sensors that continuously monitor factors such as the vehicle's lateral and vertical movements, speed, and movements of the wheels. The sensors receive data up to 500 times per second, which is used to provide extremely fast and precise adjustment of each shock absorber. The system adjusts the stiffness of the shock absorbers approximately 100 times per second

Use the button in the center console to switch between the driving modes Comfort and Sport. This can be done at any time.

Comfort
The Comfort mode chassis setting offers the greatest amount of shock absorption and the softest ride.

This mode is recommended for long-distance driving, or when driving in slippery conditions. The indicator light in the button will be off when this mode is selected.
If Comfort mode was selected when the engine was switched off, this mode will still be active when the engine is restarted.

Sport
In this mode, shock absorption is stiffer to reduce the vehicle's body sway during cornering and to provide more immediate steering response. The indicator light in the button will come on to indicate that Sport mode has been selected.
If this setting was selected when the engine was switched off, Sport mode will still be active when the engine is restarted.

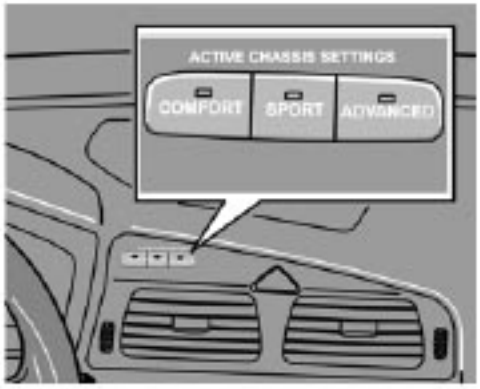

V70 R buttons on the dashboard

Advanced sport (V70 R only)
In this mode, movement of the shock absorbers is minimal, response from pressure on the throttle pedal is more direct, and body sway in curves or when cornering is sharply reduced.
If **Advanced sport mode** was selected when the engine was switched off, **Sport mode** will be active when the engine is restarted.

pg. 136 Starting and driving

Brake system

BRAKE Brake circuit malfunction
The brake system is a hydraulic system consisting of two master cylinders and two separate brake circuits. If a problem should occur in one of these circuits, it is still possible to stop the vehicle with the other brake circuit.
If the brake pedal must be depressed farther than normal and requires greater foot pressure, the stopping distance will be longer.
A warning light in the instrument panel will light up to warn the driver that a fault has occurred.
If this light comes on while driving or braking, stop immediately and check the brake fluid level in the

reservoir.

NOTE: Press the brake pedal hard and maintain pressure on the pedal - do not pump the brakes.

WARNING!

If the fluid level is below the MIN mark in the reservoir or if a "Brake failure - Service urgent" message is displayed in the text window: DO NOT DRIVE. Have the vehicle towed to a Volvo retailer and have the brake system inspected.

NOTE: When the vehicle is at a standstill and the engine is idling, e.g. at a traffic light and the brake pedal is depressed, the pedal may go down slightly. This is a normal function of the power-assisted brake system.

Power brakes function only when the engine is running
The power brakes utilize vacuum pressure which is only created when the engine is running. Never let the vehicle roll to a stop with the engine switched off.
If the power brakes are not working, the brake pedal must be pressed approximately four times harder than usual to make up for the lack of power assistance. This can happen for example when towing your vehicle or if the engine is switched off when the vehicle is rolling. The brake pedal feels harder than usual.

Water on brake discs and brake pads affects braking
Driving in rain and slush or passing through an automatic car wash can cause water to collect on the brake discs and pads. This will cause a delay in braking effect when the pedal is depressed. To avoid such a delay when the brakes are needed, depress the pedal occasionally when driving through rain, slush etc. This will remove the water from the brakes. Check that brake application feels normal. This should also be done after washing or starting in very damp or cold weather.

Severe strain on the brake system
The brakes will be subject to severe strain when driving in mountains or hilly areas or towing. Vehicle speed is usually slower, which means that the cooling of the brakes is less efficient than when driving on level roads. To reduce the strain on the brakes, shift into a lower gear and let the engine help with the braking. Do not forget that, if you are towing a trailer, the brakes will be subjected to a greater than normal load.

pg. 137 Starting and driving

Brake system

Anti-lock brakes (ABS)

If the warning lamp lights up there is a malfunction of the ABS system (the standard braking system will however function) and the vehicle should be driven cautiously to a Volvo retailer for inspection. The Anti-lock Braking System (ABS) helps to improve vehicle control (stopping and steering) during severe braking conditions by limiting brake lockup. When the system "senses" impending lockup, braking pressure is automatically modulated in order to help prevent lockup, which could lead to a skid.
The system performs a self-diagnostic test when the engine is started and when the vehicle first reaches a speed of approximately 12 mph (20 km/h). The brake pedal will pulsate several times and a sound may be audible from the ABS control module. This is normal.
To obtain optimal effect from the ABS system, constant pressure should be kept on the brake pedal. Do not pump the brake pedal.
The switching of the ABS modulator will be audible and the brake pedal will pulsate during braking.
Please be aware that ABS does not increase the absolute braking potential of the vehicle. While control will be enhanced, ABS will not shorten stopping distances on slippery surfaces.

ABS with EBD (Electronic Brake Force Distribution)

EBD is an integrated part of the ABS system. EBD regulates the hydraulic pressure to the rear brakes to help provide optimal braking capacity. The brake pedal will pulsate during braking, which is normal.
If the BRAKE and ABS warning lights come on at the same time, this could indicate a fault in the brake system.
- Stop the vehicle in a suitable place and switch off the engine.
- Restart the engine.
- If both warning lights go off, no further action is required.
- If both lights are still on after the engine has been restarted, switch off the engine again and check the brake fluid level (see page 193 for the location of the brake fluid reservoir).

WARNING!

If the fluid level is below the MIN mark in the reservoir or if a "Brake failure - Service urgent" message is displayed in the text window: DO NOT DRIVE. Have the vehicle towed to a Volvo retailer and have the brake system inspected.

- If the brake fluid level is above the MIN mark, drive carefully to an authorized Volvo retailer and have the brake system inspected.

Emergency Brake Assistance (EBA)

The EBA function is designed to provide full brake effect immediately in the event of sudden, hard braking. The system is activated by the speed with which you depress the brake pedal.

NOTE:
- When the EBA system is activated, the brake pedal will go down and pressure in the brake system immediately increases to the maximum level. You must maintain full pressure on the brake pedal in order to utilize the system completely. There will be no braking effect if the pedal is

pg. 138 Starting and driving

Brake system

released. EBA is automatically deactivated when the brake pedal is released.
- When the vehicle has been parked for some time, the brake pedal may sink more than usual when the engine is started. This is normal and the pedal will return to its usual position when it is released.

pg. 139 Starting and driving

Stability system

Stability Traction Control (STC)/ Dynamic Stability Traction Control (DSTC)
The stability system consists of a number of functions designed help reduce wheel spin, counteract skidding, and to generally help improve directional stability.

NOTE: A pulsating sound will be audible when the system is actively operating and is normal.

Function/ system	STC[1]	DSTC[2]
TC	X	X
SC	X	X
AYC		X

1. Standard on all models except the T5 turbo and R-models. Models equipped with All Wheel Drive (AWD) have an integrated traction control function, and are not equipped with an STC button. DSTC is optional on AWD models.
2. Standard on the T5 turbo and R-models, option on all other models.

Traction control (TC)
This function is designed to help reduce wheel spin by transferring power from a drive wheel that begins to lose traction to the wheel on the opposite side of the vehicle (on the same axle).
TC is most active at low speeds.
This is one of the STC/DSTC's permanent functions and cannot be switched off.

Spin control (SC)
The spin control function is designed to help prevent the drive wheels from spinning while the vehicle is accelerating.
Under certain circumstances, such as when driving with snow chains, or driving in deep snow or loose sand, it may be advisable to temporarily switch off this function for maximum tractive force.

Temporarily switching off Spin control
V70R
Press the DSTC button on the center control panel (see page 50) for at least a half a second. "DSTC SPIN CONTROL OFF" will be displayed and the indicator light in the button will go out.

Other V70 models
- Turn the thumb-wheel (1) on the left-side steering wheel lever until the STC/DSTC menu is displayed.
- Hold down the RESET button (2) to toggle between STC/DSTC SPIN CONTROL ON or OFF.

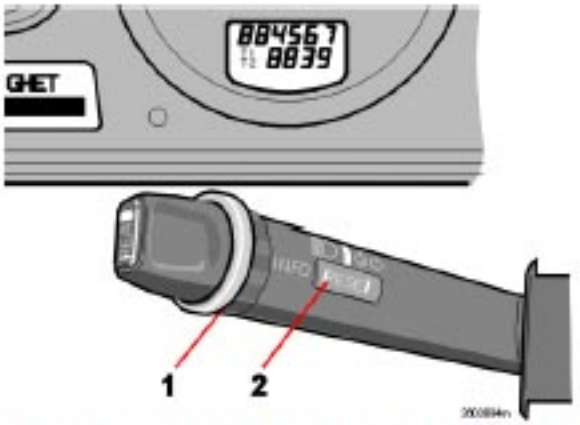

Controls on the left-side steering wheel lever

NOTE:
- The message STC/DSTC SPIN CONTROL OFF indicates that the stability system's spin control function has temporarily been switched off.
- The stability control indicator light will illuminate and remain on until spin control has been reactivated.
- STC/DSTC ON indicates that all system functions are active[1].
- The spin control function is automatically enabled each time the engine is started.

1. V70R only: the indicator light in the DSTC button will illuminate to indicate that all stability system functions are on.

pg. 140 Starting and driving

Stability system

Active Yaw Control (AYC) - DSTC only
This function helps maintain directional stability, for example when cornering, by braking one or more of the wheels if the vehicle shows a tendency to skid or slide laterally.

R-models only
The AYC function can be deactivated. This is done by pressing the DSTC button on the center control panel (see the illustration on page 50) for approximately one second. This procedure must be repeated 5 times, after which "DSTC REDUCED FUNCTION" will be displayed in the text window. AYC will be automatically reactivated the next time the ignition is switched on.
The indicator light in the DSTC button will be off.

WARNING!

The car's handling and stability characteristics will be altered if the STC or DSTC system functions have been disabled.

STC/DSTC-related messages in the text window
- "TRACTION CONTROL TEMPORARILY OFF" - The system has been temporarily switched off due to high brake temperature and will automatically switch on again when the brakes have cooled.

"ANTI SKID SERVICE REQUIRED" - the system has been automatically disengaged due to a fault. An authorized Volvo retailer should check the system.

Symbols in the instrument panel
The Stability Control indicator light
This light indicates different conditions, depending on how it illuminates.

The Stability Control indicator light illuminates for approximately 2 seconds
This indicates that the system is performing a self-diagnostic test when the ignition is switched on.

The Stability Control indicator light flashes
This indicates that the stability system is actively functioning to help counteract wheel spin and/or a skid.

The Stability Control indicator light glows steadily
"ANTI SKID SERVICE REQUIRED" will be displayed in the text window at the same time.
A fault is indicated in the stability system.
- Stop the vehicle in a safe place and switch off the engine.
- Restart the engine.
- If the indicator light goes out, the fault was temporary and no further action is required.

- If the indicator light remains on, drive to an authorized Volvo workshop as soon as possible to have the system checked.

The Stability Control indicator light glows steadily
If "STC/DSTC SPIN CONTROL OFF" is displayed in the text window at the same time, this is a reminder that spin control has been disabled by the driver.

The warning symbol

The warning symbol glows steadily yellow

NOTE: The system has been temporarily switched off due to high brake temperature. "TRACTION CONTROL TEMPORARILY OFF" will be displayed. The system will automatically switch on again when the brakes have cooled.

pg. 141 Starting and driving

Stability system

WARNING!

The stability system is intended to help improve driving safety. It supplements, but can never replace, the driver's judgement and responsibility when operating the vehicle. Speed and driving style should always be adapted to traffic and road conditions.

pg. 142 Starting and driving

Towing

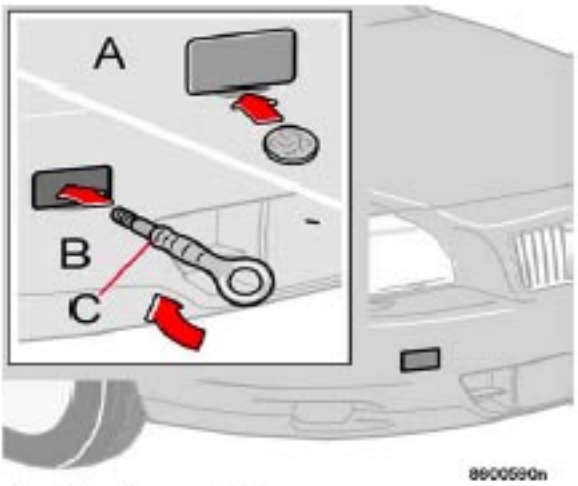

Front towing eyelet

Emergency towing

The towing eyelet is located in the tool bag, under the floor of the cargo area, with the spare tire. This eyelet must be screwed into the positions provided on the right sides of either the front or rear bumper (see illustrations).

To attach the towing eyelet:

A. Use a coin to pry open the lower edge of the.

B. Screw the towing eyelet (C) in place, first by hand and then using the tire iron until it is securely in place.

After the vehicle has been towed, the eyelet should be removed and returned to the tool bag. Press the cover back into position.

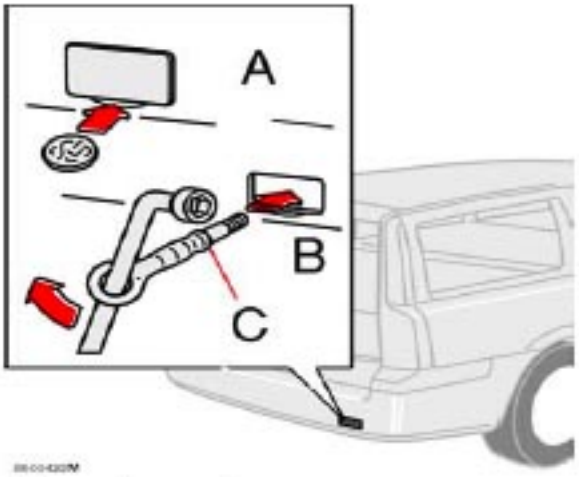

Rear towing eyelet

Precautions when the vehicle is in tow

- The steering wheel must be unlocked. Turn the ignition key to position I or II.
- The gear selector must be in position N.
- Maximum speed: 50 mph (80 km/h). Do not exceed the maximum allowable towing speed.

- Maximum distance with front wheels on ground: 50 miles (80 km).
- While the vehicle is being towed, try to keep the tow rope taut at all times.
- The vehicle should only be towed in forward direction.

CAUTION!

- Please check with state and local authorities before attempting this type of towing, as vehicles being towed are subject to regulations regarding maximum towing speed, length and type of towing device, lighting, etc.
- If the vehicle's battery is dead, do not attempt to start the vehicle by pushing or pulling it as this will damage the three-way catalytic converter(s). The engine must be jump started using an auxiliary battery (see page 144).
- If the vehicle is being towed on a flat bed truck, the towing eyelets must not be used to secure the vehicle on the flat bed. Consult the tow truck operator.

pg. 143 Starting and driving

Towing

WARNING!

Remember that the power brakes and power steering will not function when engine is not running. The braking and steering systems will function but the brake pedal pressure required is 3 - 4 times above normal and greater steering effort must be exerted.
The towing eyelets must not be used for pulling another vehicle out of a ditch or for any similar purpose involving severe strain.
Do not use the towing eyelets to pull the vehicle up onto a flat bed tow truck.

Towing vehicles with front wheel drive/All Wheel Drive
Volvo recommends the use of flat bed equipment.
If wheel lift equipment must be used, please use extreme caution to help avoid damage to the vehicle. **In this case, the vehicle should be towed with the rear wheels on the ground if at all possible**.
If it is absolutely necessary to tow the vehicle with the front wheels on the ground, please refer to the towing information on the previous page.

CAUTION!

Sling-type equipment applied at the front will damage radiator and air conditioning lines.
It is equally important not to use sling-type equipment at the rear or apply lifting equipment inside the rear wheels; serious damage to the rear axle may result.
If the vehicle is being towed on a flat bed truck, the towing eyelets must not be used to secure the vehicle on the flat bed. Consult the tow truck operator.

WARNING!

Do not use the towing eyelets to pull the vehicle up onto a flat bed tow truck.

pg. 144 Starting and driving

Jump starting

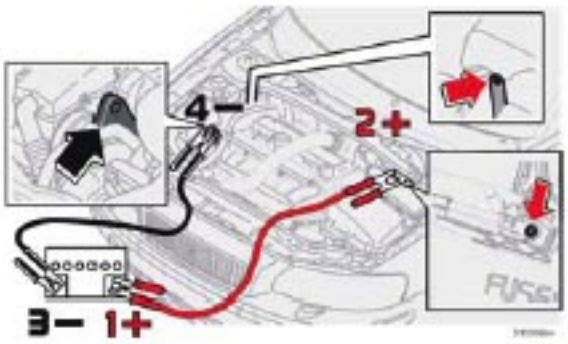

Jump starting
Follow these instructions to jump start your vehicle's dead battery or to jump start another vehicle's dead battery using your vehicle. Although your vehicle's battery is located under the floor of the cargo area, jumper cables should be connected in the **engine compartment**, to the points shown in the illustrations. If the 12-volt auxiliary battery to be used is in another vehicle, check that the vehicles are not touching to prevent premature completion of a circuit. Be sure to follow jump starting instructions provided for the other vehicle.

To jump start your vehicle
- Switch off the ignition.
- First connect the auxiliary battery positive (+) terminal (1) to the positive (+) terminal in your vehicle's

engine compartment (2), located under a small black plastic cover attached to the fuse box cover, marked with a "+" sign. Remove the cover on the main fuse box if necessary to access this terminal. Then connect the auxiliary battery's negative (-) terminal (3) to the ground point in your vehicle's engine compartment (4).
- Start the engine in the assisting vehicle, then start the engine in the vehicle with dead battery.
- After the engine has started, first remove the negative (-) terminal jumper cable. Then remove the positive (+) terminal jumper cable.

WARNING!

PROPOSITION 65 WARNING!
Battery posts, terminals, and related accessories contain lead and lead compounds, chemicals known to the state of California to cause cancer and reproductive harm. Wash hands after handling.

WARNING!

- Do not connect the jumper cable to any part of the fuel system or to any moving parts. Avoid touching hot manifolds.
- Never expose the battery to open flame or electric spark.
- Do not smoke near the battery.
- Batteries generate hydrogen gas, which is flammable and explosive.
- Battery fluid contains sulfuric acid. Do not allow battery fluid to contact eyes, skin, fabrics or painted surfaces. If contact occurs, flush the affected area immediately with water. Obtain medical help immediately if eyes are affected.
- Failure to follow the instructions for jump starting can lead to personal injury.

pg. 145 Starting and driving

Towing a trailer

Volvo recommends the use of Volvo trailer hitches that are specially designed for the vehicle.
- Maximum trailer weight recommended by Volvo is:

Trailers without brakes: 1650 lbs (750 kg)
Trailers with brakes: 2" (50 mm) ball - 3300 lbs (1500 kg), 1 7/8" (47 mm) ball - 2000 lbs (900 kg).
Observe the legal requirements of the state/province in which the vehicles are
- All Volvo models are equipped with energy-absorbing shock-mounted bumpers. Trailer hitch installation should not interfere with the proper operation of this bumper system.

Trailer towing does not normally present any particular problems, but take into consideration:
- Increase tire pressure to recommended full. See section "Wheels and tires."
- When your vehicle is new, avoid towing heavy trailers during the first 620 miles (1000 km).
- Recommended hitch tongue load is: Trailer weights **below** 2,650 lbs (1,200 kg) - 110 lbs (50 kg) Trailer weights **above** 2,650 lbs (1,200 kg) - 165 lbs (75 kg)
- Maximum speed when towing a trailer: 50 mph (80 km/h).
- Engine and transmission are subject to increased loads. Therefore, engine coolant temperature should be closely watched when driving in hot climates or hilly terrain. Use a lower gear and turn off the air conditioner if the temperature gauge needle enters the red range.
- If the automatic transmission begins to overheat, a message will be displayed in the text window.
- Avoid overload and other abusive operation.
- Hauling a trailer affects handling, durability, and economy.
- It is necessary to balance trailer brakes with the towing vehicle brakes to provide a safe stop (check and observe state/ local regulations).
- Do not connect the trailer's brake system directly to the vehicle's brake system.
- More frequent vehicle maintenance is required.
- Remove the ball and drawbar assembly when the hitch is not being used.
- Volvo recommends the use of synthetic engine oil when towing a trailer over long distances or in mountainous areas.

WARNING!

- Bumper-attached trailer hitches must not be used on Volvos, nor should safety chains be attached to the bumper.
- Trailer hitches attaching to the vehicle rear axle must not be used.
- Never connect a trailer's hydraulic brake system directly to the vehicle brake system, nor a trailer's lighting system directly to the vehicle lighting system. Consult your nearest authorized Volvo retailer for correct installation.
- When towing a trailer, the trailer's safety wire must be correctly fastened to the hole or hook provided in the trailer hitch on the vehicle. The safety wire should never be fastened to or wound around the drawbar ball.

NOTE:
- When parking the vehicle with a trailer on a hill, apply the parking brake before putting the gear selector in (**P**)ark (first/ reverse gear on manual transmissions).

pg. 146 Starting and driving

Towing a trailer

Always follow the trailer manufacturer's recommendations for wheel chocking.

- When starting on a hill, put the gear selector in (**D**)rive before releasing the parking brake.
- If you use the manual (Geartronic) shift positions while towing a trailer, make sure the gear you select does not put too much strain on the engine (using too high a gear).
- The drawbar assembly/trailer hitch may be rated for trailers heavier than the vehicle is designed to tow. Please adhere to Volvo's recommended trailer weights.

Leveling

If your vehicle is equipped with automatic leveling, the rear suspension always retains the correct ride height regardless of the load. When the vehicle is stationary, the rear suspension lowers, which is normal.

pg. 147 Starting and driving

Detachable trailer hitch

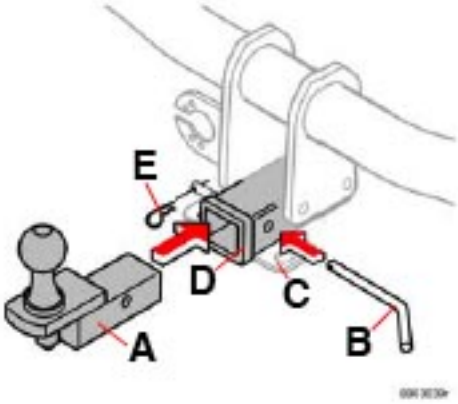

A. Ball holder
B. Locking bolt
C. Safety wire attachment
D. Hitch assembly
E. Cotter pin

Installing the ball holder

- If necessary, remove the cotter pin from the locking bolt and slide the locking bolt out of the hitch

assembly.
- Slide the ball holder into the hitch assembly.
- Align the hole in the ball holder with the one in the hitch assembly.
- Slide the locking bolt through the hitch assembly/ball holder.
- Insert the cotter pin in the hole at the end of the locking bolt.

Removing the ball holder
- Remove the cotter pin from the locking bolt and slide the locking bolt out of the ball holder/hitch assembly.
- Pull the ball holder out of the hitch assembly.

A cover for the hitch assembly can be purchased from your Volvo retailer.

pg. 148 Starting and driving

Load carriers (accessory)

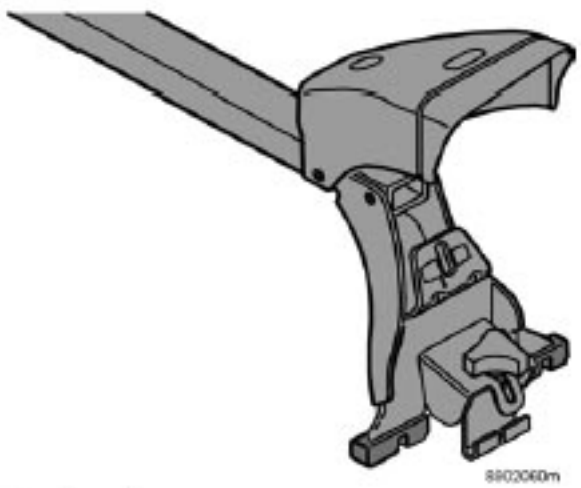

Load carrier

Load carriers
Load carriers are available as Volvo accessories. Observe the following points when in use:
- To avoid damaging your vehicle and to achieve maximum safety when driving, we recommend using the load carriers that Volvo has developed especially for your vehicle.
- Volvo-approved removable roof racks are designed to carry the maximum allowable roof load for this vehicle: 220 lbs (100 kg). For Non-Volvo roof racks, check the manufacturer's weight limits for the rack.
- Never exceed the rack manufacturer's weigh limits and never exceed the maximum rated roof load of 220 lbs (100 kg).
- Avoid single-point loads. Distribute loads evenly.
- Place heavier cargo at the bottom of the load.
- Secure the cargo correctly with appropriate tie-down equipment.

- Check periodically that the load carriers and load are properly secured.
- Remember that the vehicle's center of gravity and handling change when you carry a load on the roof.
- The vehicle's wind resistance and fuel consumption will increase with the size of the load.
- Drive smoothly. Avoid rapid starts, fast cornering and hard braking.

Attaching load carriers
The attachment brackets for the load carriers are located under the roof molding.
- Make sure that the load carriers are placed in the right direction. See the mark on the decal under the cover.
- Press the guide lugs into the holes (1).
- Carefully lower the opposite side of the load carrier to the roof.
- Loosen the tightening wheel slightly. Slide the hook on the load carrier attachment into the attachment bracket under the roof molding.
- Turn the tightening wheel to secure the load carrier in the attachment bracket.

pg. 149 Starting and driving

Load carriers (accessory)

- Repeat this procedure for the other load carrier attachments.
- Check that the hooks on all four load carrier attachments are securely tightened in the respective attachment brackets on the roof of the vehicle.
- Press down the covers.

Check periodically that the load carriers and load are properly secured.

pg. 150 Starting and driving

Load carriers (accessory)

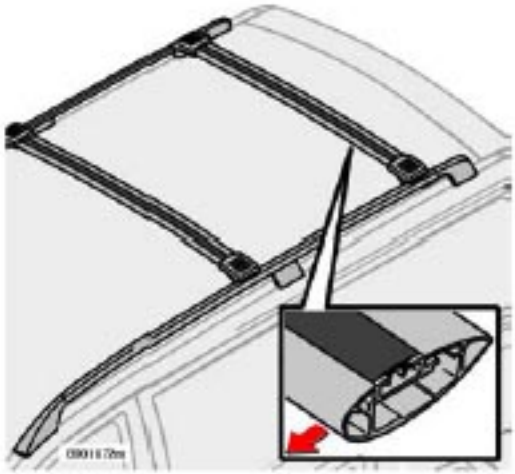

Attaching load carriers (models with rails)

Positioning the load carriers

Make sure that the wing-shaped load carriers are installed on the roof rails with the rounded edge forward (see the inset illustration above). The load carriers are identical and can be placed anywhere along the roof rails.

Tightening the load carriers

Make sure that the load carrier is pressed firmly out against the roof rail. Screw the load carrier in place. Use the supplied torque wrench and tighten to the mark on the wrench (corresponding to 6 Nm). See the illustration above.

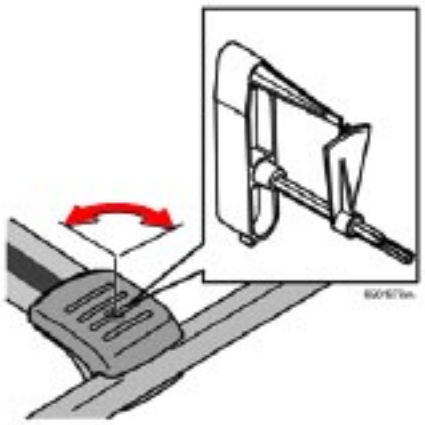

Load carrier cover
The vehicle's ignition key or the stud on the edge of the supplied torque wrench can be used to undo or tighten the cover. Turn a quarter turn (90 degrees). See illustration.

pg. 151 Starting and driving

Cold weather precautions

If you wish to check your vehicle before the approach of cold weather, the following advice is worth noting:

- Make sure that the engine coolant contains 50 percent antifreeze. Any other mixture will reduce freeze protection. This gives protection against freezing down to -31°F (-35°C). See section "Coolant". **The use of "recycled" antifreeze is not approved by Volvo. Different types of antifreeze must not be mixed.**
- Volvo recommends using only genuine Volvo antifreeze in your vehicle's radiator. Your Volvo retailer stocks plenty of Volvo engine coolant to protect your vehicle during cold weather.
- Try to keep the **fuel tank** well filled - this prevents the formation of condensation in the tank. In addition, in extremely cold weather conditions it is worthwhile to add fuel line de-icer before refueling.
- The viscosity of the **engine oil** is important. Oil with low viscosity (thinner oil) improves cold-weather starting as well as decreasing fuel consumption while the engine is warming up. For winter use, 5W-30 oil, particularly the synthetic type[1], is recommended. Be sure to use good quality oil but do not use cold-weather oil for hard driving or in warm weather. See section "Engine oil" for more information.
- The load placed on the **battery** is greater during the winter since the windshield wipers, lighting, etc. are used more often. Moreover, the capacity of the battery decreases as the temperature drops. In very cold weather, a poorly charged battery can freeze and be damaged. It is therefore advisable to check the state of charge more frequently and spray an antirust oil on the battery posts.
- Volvo recommends the use of **snow tires** on all four wheels for winter driving - see section "Wheels and tires."
- To prevent the **washer fluid reservoir** from freezing, add washer solvents containing antifreeze (see

page 189 for the location of the washer fluid reservoir). This is important since dirt is often splashed on the windshield during winter driving, requiring the frequent use of the washers and wipers. Volvo Washer Solvent should be diluted as follows:
- **Down to 14° F (-10° C)**: 1 part washer solvent and 4 parts water
- **Down to 5° F (-15° C)**: 1 part washer solvent and 3 parts water
- **Down to 0° F (-18° C)**: 1 part washer solvent and 2 parts water
- **Down to -18° F (-28° C)**: 1 part washer solvent and 1 part water

- Use Volvo Teflon Lock Spray in the locks.

NOTE: Avoid the use of de-icing sprays as they can cause damage to the locks.

W - Winter/Wet driving mode - enhanced vehicle traction (automatic transmission)
- Mode W will only function if the gear selector is in the (**D**)rive position.
- Press the button at the base of the gear selector to engage/disengage this driving mode.
- An LED in the button will light up to indicate that W is engaged and this will also be displayed in the instrument panel (see page 46).
- This mode may be selected for starting/ moving off on slippery roads.

1. Synthetic oil is not used when the oil is changed at the normal maintenance service intervals.

pg. 152 Starting and driving

Before a long distance trip

It is always worthwhile to have your vehicle checked at a Volvo retailer before driving long distances. Your retailer will also be able to supply you with bulbs, fuses, spark plugs and wiper blades for your use in the event that problems occur.
As a minimum, the following items should be checked before any long trip:
- Check that engine runs smoothly and that fuel consumption is normal.
- Check for fuel, oil, and fluid leakage.
- Check transmission oil level[1].
- Check condition of drive belts.
- Check state of the battery's charge.
- Examine tires carefully (the spare tire as well), and replace those that are worn. Check tire pressures.
- The brakes, front wheel alignment, and steering gear should be checked by your Volvo retailer only.
- Check all lights, including high beams.
- Reflective warning triangles are legal requirement in some countries.
- Have a word with your Volvo retailer if you intend to drive in countries where it may be difficult to obtain the correct fuel.
- Consider your destination. If you will be driving through an area where snow or ice are likely to occur, consider snow tires.

1. To prevent injury from contact with hot surfaces, do not inspect your vehicle's transmission fluid yourself. Have your vehicle's transmission fluid level inspected by a qualified Volvo service technician.

pg. 153 Starting and driving

Front/rear park assist (option/accessory)

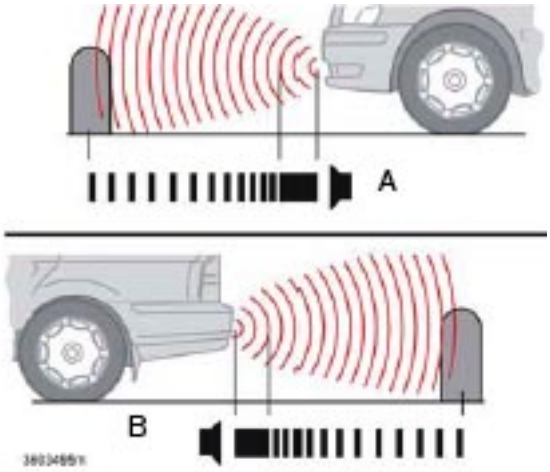

A. Front (accessory as available)
B. Rear (option)

Front/rear park assist
The park assist system(s) are designed to assist you when driving into parking spaces, garages, etc. They utilize ultrasound sensors located in the bumpers to measure the distance to a vehicle or other object, or a person who may be close to the front or rear of the vehicle.

When is park assist active?
Front: the system is active from the time the engine is started until the vehicle exceeds a speed of approximately 10 mph (15 km/h). It is also active when the vehicle is backing up. Front park assist reactivates automatically when the vehicle's speed goes under 10 mph (15 km/h).
Rear: when the engine is running and reverse gear is selected.

NOTE:
"PARK ASSIST ACTIVE" will be displayed.
- If the vehicle is equipped with front and rear park assist, both systems will either be activated or deactivated together. They cannot be used separately.
- The indicator light in the button (see the illustration on page 52) will light up to indicate that park assist system(s) are activated.

When park assist is actively working:

- The audio system's volume will be reduced.
- An intermittent signal will be audible from the speakers to indicate that you are approaching a person, object, parked vehicle, etc. The signals begin when the distance between the bumper and the object is:

Rear: approximately 5 feet (1.5 meters)
Front: approximately 2.5 ft (0.8 meters)

- At a distance of approximately 1 foot (30 cm), the signal will become constant. If objects are close to both the front and rear bumpers, the signal will alternate between the front and rear speakers.

Deactivating the system(s)

- Press the Park assist button on the center console (see page 55) to temporarily deactivate the system(s).
- The indicator light in the button will go out when the system(s) have been deactivated.
- If the vehicle is equipped with front and rear park assist, both systems will be deactivated by pressing the button.

Park assist will be automatically reactivated the next time the engine is started.

NOTE: It may be necessary to deactivate one or both of the park assist systems in certain cases.

- **Rear park assist**: towing a trailer, carrying bicycles in a rear-mounted carrier, etc, could trigger the rear park assist system's sensors.
- **Front park assist**: it may not be possible to combine auxiliary headlights and front park assist since these lights could trigger the system's sensors.

pg. 154 Starting and driving

Front/rear park assist (option/accessory)

Faults in the system

If the yellow warning symbol illuminates and a message is shown in the information display, the system is not functioning properly. Consult a Volvo retailer or authorized service technician.

Cleaning the sensors

For the system to function properly, the sensors in the front and/or rear bumpers should be kept clean. They can be cleaned with car washing detergent and a sponge.

WARNING!

These systems are designed to be a supplementary aid when parking the vehicle. They are not, however, intended to replace the driver's attention and judgement.

CAUTION!

In certain circumstances, the park assist system may give unexpected warning signals that can be caused by external sound sources that use the same ultrasound frequencies as the system. This may include such things as the horns of other vehicles, wet tires on asphalt, pneumatic brakes, motorcycle exhaust pipes, etc. This does not indicate a fault in the system.

Contents | Top of Page

2 0 0 7
VOLVO
XC70

Wheels and tires

pg. 155 Wheels and tires

General information	156
Inflation pressure	158
Tire inflation pressure tables - U.S. models	160
Tire inflation pressure tables - Canadian models	161
Tire Pressure Monitoring System (TPMS) - option on certain U.S. models only	162
Self supporting run flat tires (option)	164
Tire designations	165
Glossary of tire terminology	166
Vehicle loading	167
Uniform Tire Quality Grading	169
Snow chains, snow tires, studded tires	170
Temporary spare	171
Changing wheels	174

pg. 156 Wheels and tires

General information

Your vehicle is equipped with tires according to the vehicle's tire information placard on the B-pillar (the structural member at the side of the vehicle, at the rear of the driver's door opening), or on the inside of the fuel filler door on Canadian models.
The tires have good road holding characteristics and offer good handling on dry and wet surfaces. It should be noted however that the tires have been developed to give these features on snow/ice-free

surfaces.
Certain models are equipped with "all-season" tires, which provide a somewhat higher degree of road holding on slippery surfaces than tires without the "all-season" rating. However, for optimum road holding on icy or snow-covered roads, we recommend suitable winter tires on all four wheels.
When replacing tires, be sure that the new tires are the same size designation, type (radial) and preferably from the same manufacturer, on all four wheels. Otherwise there is a risk of altering the vehicle's roadholding and handling characteristics.

Storing wheels and tires
When storing complete wheels (tires mounted on rims), they should be suspended off the floor or placed on their sides on the floor.
Tires not mounted on rims should be stored on their sides or standing upright, but should not be suspended.

CAUTION!

Tires should preferably be stored in a cool, dry, dark place, and should never be stored in close proximity to solvents, gasoline, oils, etc.

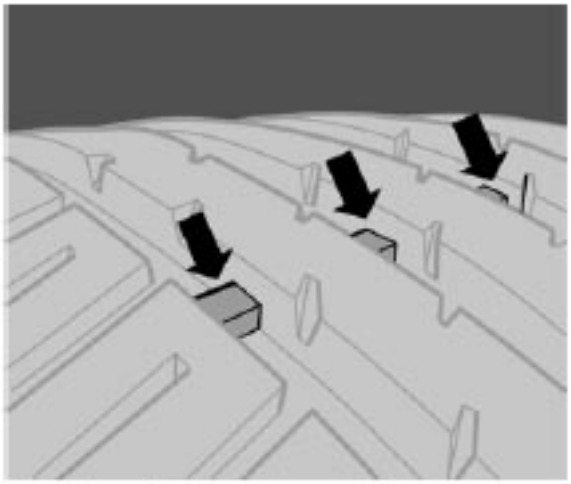

Tread wear indicator

Tread wear indicator
The tires have wear indicator strips running across or parallel to the tread. The letters TWI are printed on the side of the tire. When approximately 1/16" (1.6 mm) is left on the tread, these strips become visible and indicate that the tire should be replaced. Tires with less than 1/16" (1.6 mm) tread offer very poor traction.
When replacing worn tires, it is recommended that the tire be identical in type (radial) and size as the one being replaced. Using a tire of the same make (manufacturer) will prevent alteration of the driving characteristics of the vehicle.

pg. 157 Wheels and tires

General information

WARNING!

- The wheel and tire sizes for your Volvo are specified to meet stringent stability and handling requirements. Unapproved wheel/tire size combinations can negatively affect your vehicle's stability and handling. Approved tire sizes are shown in the Tire inflation pressure tables on pages 160 and 161.
- Any damage caused by installation of unapproved wheel/tire size combinations will not be covered by your new vehicle warranty. Volvo assumes no responsibility for death, injury, or expenses that may result from such installations.

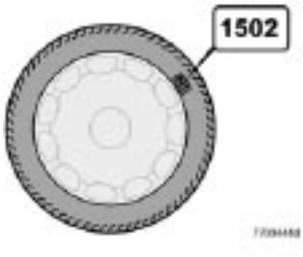

New tires

Remember that tires are perishable goods. As of 2000, the manufacturing week and year will be indicated with 4 digits (e.g. 1502 means that the tire illustrated was manufactured during week 15 of 2002).

Tire age

Tires degrade over time, even when they are not being used. It is recommended that tires generally be replaced after 6 years of normal service. Heat caused by hot climates, frequent high loading conditions or Ultra Violet (U.V) exposure can accelerate the aging process.
You should replace the spare tire when you replace the other road tires due to the aging of the spare.
A tire's age can be determined by the DOT stamp on the sidewall (see the illustration above).
A tire with e.g., visible cracks or discoloration should be replaced immediately.

Improving tire economy:

- Maintain correct tire pressure. See the tire pressure table on pages 160 and 161.
- Drive smoothly: avoid fast starts, hard braking and tire screeching.
- Tire wear increases with speed.
- Correct front wheel alignment is very important.
- Unbalanced wheels impair tire economy and driving comfort.

- Tires must maintain the same direction of rotation throughout their lifetime.

When replacing tires, the tires with the most tread should be mounted on the rear wheels to reduce the chance of oversteer during hard braking.
Hitting curbs or potholes can damage the tires and/or wheels permanently.

pg. 158 Wheels and tires

Inflation pressure

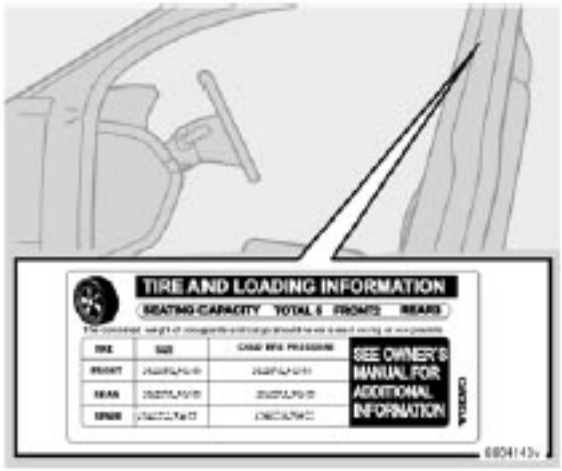

Tire inflation placards on U.S. models

Tire inflation
Check tire inflation pressure regularly.
Tables listing the recommended inflation pressure for your vehicle can be found on pages 160 and 161.
A tire inflation pressure placard is also located on the driver's side B-pillar (the structural member at the side of the vehicle, at the rear of the driver's door opening). This placard indicates the designation of the factory-mounted tires on your vehicle, as well as load limits and inflation pressure.

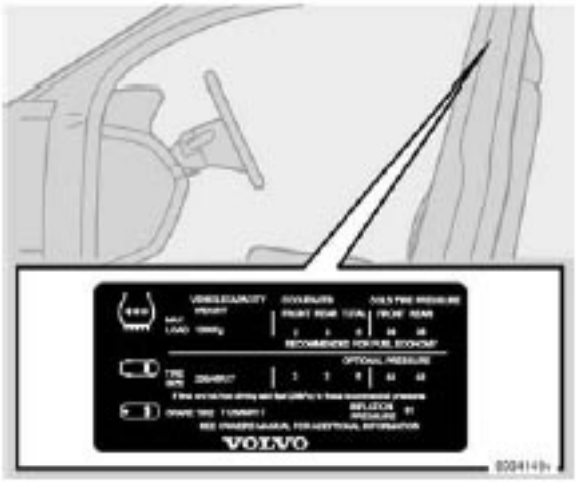

Tire inflation placard on Canadian models

NOTE: The placards shown indicate inflation pressure for the tires installed on the vehicle at the factory only.

- Use a tire gauge to check the tire inflation pressure, including the spare, at least once a month and before long trips. You are strongly urged to buy a reliable tire pressure gauge, as automatic service station gauges may be inaccurate.
- Use the recommended cold inflation pressure for optimum tire performance and wear.
- Under-inflation or over-inflation may cause uneven treadwear patterns.

WARNING!

- Under-inflation is the most common cause of tire failure and may result in severe tire cracking, tread separation, or "blowout," with unexpected loss of vehicle control and increased risk of injury.
- Under-inflated tires reduce the load carrying capacity of your vehicle.

When weather temperature changes occur, tire inflation pressures also change. A 10- degree temperature drop causes a corresponding drop of 1 psi (7 kPa) in inflation pressure. Check your tire pressures frequently and adjust them to the proper pressure, which can be found on the vehicle's tire information placard or certification label.

Checking tire pressure

A certain amount of air seepage from the tires occurs naturally and tire pressure fluctuates with seasonal changes in temperature. Always check tire pressure regularly.

Cold tires

Inflation pressure should be checked when the tires are cold.

pg. 159 Wheels and tires

Inflation pressure

The tires are considered to be cold when they have the same temperature as the surrounding (ambient) air.
This temperature is normally reached after the vehicle has been parked for at least 3 hours.
After driving a distance of approximately 1 mile (1.6 km), the tires are considered to be hot. If you have to drive farther than this distance to pump your tire(s), check and record the tire pressure first and add the appropriate air pressure when you get to the pump.
If checking tire pressure when the tire is hot, never "bleed" or reduce air pressure. The tires are hot from driving and it is normal for pressures to increase above recommended cold pressures. A hot tire at or below recommended cold inflation pressure could be significantly under-inflated.

To check inflation pressure:
- Remove the cap from the valve on one tire, then firmly press the tire gauge onto the valve.
- Add air to reach the recommended air pressure.
- Replace the valve cap.
- Repeat this procedure for each tire, including the spare.
- Visually inspect the tires to make sure there are no nails or other objects embedded that could puncture the tire and cause an air leak.
- Check the sidewalls to make sure there are no gouges, cuts, bulges or other irregularities.

NOTE:
- If you overfill the tire, release air by pushing on the metal stem in the center of the valve. Then recheck the pressure with your tire gauge.
- Some spare tires require higher inflation pressure than the other tires. Consult the tire inflation table on pages 160 and 161 or see the inflation pressure placard.

pg. 160 Wheels and tires

Tire inflation pressure tables - U.S. models

The following tire pressures are recommended by Volvo for your vehicle. Refer to the tire inflation placard for information specific to the tires installed on your vehicle at the factory.

Cold tire pressures up to five persons		
Tire size	**Front, psi (kPa)**	**Rear, psi (kPa)**

V70 195/65R15 205/55R16 215/55R16 235/45R17 235/45R17 SSRFT[1]	35 (240)	35 (240)
Temporary spare tire T125/80R17	61 (420)	61 (420)
V70 R 235/45R17	39 (270)	39 (270)
Temporary spare tire T115/85R18	61 (420)	61 (420)
XC70 215/65R16 215/60R17	36 (250)	36 (250)
Temporary spare tire T135/90R17	61 (420)	61 (420)

1. Self supporting run flat tires. See page 164 for more information.

Load ratings
The load ratings in the tables above translate as follows:
91 = 1365 lbs (615 kg), 93 = 1433 lbs (650 kg), 99 = 1709 lbs (755 kg)

Speed ratings
The speed ratings in the tables translate as follows:
M = 81 mph (130 km/h), V= 149 mph (240 km/h), W= 168 mph (270 km/h)

See also page 165 for an explanation of the designations on the sidewall of the tire.

pg. 161 Wheels and tires

Tire inflation pressure tables - Canadian models

The following tire pressures are recommended by Volvo for your vehicle. Refer to the tire inflation placard for information specific to the tires installed on your vehicle at the factory.

Tire size	Cold tire pressures up to five persons psi (kPa)		Optional pressure up to three persons psi (kPa)	
	Front	**Rear**	**Front**	**Rear**
V70 195/65R15 205/55R16 215/55R16 235/45R17	38 (260)	38 (260)	32 (220)	32 (220)
Temporary spare tire T125/80R17	61 (420)	61 (420)	61 (420)	61 (420)
V70 R 235/45R17	39(270)	39(270)	35 (240)	35 (240)
Temporary spare tire T115/85R18	61 (420)	61 (420)	61 (420)	61 (420)
XC70 215/65R16 215/60R17	38 (260)	38 (260)	30 (210)	30 (210)
Temporary spare tire T135/90R17	61 (420)	61 (420)	61 (420)	61 (420)

pg. 162 Wheels and tires

Tire Pressure Monitoring System (TPMS) - option on certain U.S. models only

The tire pressure monitoring system uses sensors mounted in the tire valves to check inflation pressure levels. When the vehicle is moving at a speed of approximately 20 mph (30 km/h) or faster, these sensors transmit inflation pressure data to a receiver located in the vehicle.

USA - FCC ID: MRXTG315AM04
This device complies with part 15 of the FCC rules. Operation is subject to the following conditions: (1) This device may not cause harmful interference, and (2) this device must accept any interference received, including interference that may cause undesired operation.

When low inflation pressure is detected, TPMS will light up the tire pressure warning light ( ) (also referred to as a telltale) in the instrument panel, and will display a message in the text window. The

wording of this message is determined by the degree of inflation pressure loss.

NOTE: If a fault occurs in TPMS, the tire pressure warning light will flash for approximately 1 minute and TIRE PRESS SYST SERVICE REQUIRED will be displayed.

Each tire, including the spare (if provided), should be checked monthly when cold and inflated to the inflation pressure recommended by the vehicle manufacturer on the vehicle placard or tire inflation pressure label. (If your vehicle has tires of a different size than the size indicated on the vehicle placard or tire inflation pressure label, you should determine the proper tire inflation pressure for those tires.)

As an added safety feature, your vehicle has been equipped with a tire pressure monitoring system (TPMS) that illuminates a low tire pressure telltale when one or more of your tires is significantly under-inflated. Accordingly, when the low tire pressure telltale illuminates, you should stop and check your tires as soon as possible, and inflate them to the proper pressure. Driving on a significantly under-inflated tire causes the tire to overheat and can lead to tire failure. Under-inflation also reduces fuel efficiency and tire tread life, and may affect the vehicle's handling and stopping ability.

Please note that the TPMS is not a substitute for proper tire maintenance, and it is the driver's responsibility to maintain correct tire pressure, even if under-inflation has not reached the level to trigger illumination of the TPMS low tire pressure telltale.

Your vehicle has also been equipped with a TPMS malfunction indicator to indicate when the system is not operating properly. The TPMS malfunction indicator is combined with the low tire pressure telltale. When the system detects a malfunction, the telltale will flash for approximately one minute and then remain continuously illuminated. This sequence will continue upon subsequent vehicle start-ups as long as the malfunction exists. When the malfunction indicator is illuminated, the system may not be able to detect or signal low tire pressure as intended. TPMS malfunctions may occur for a variety of reasons, including the installation of replacement or alternate tires or wheels on the vehicle that prevent the TPMS from functioning properly. Always check the TPMS malfunction telltale after replacing one or more tires or wheels on your vehicle to ensure that the replacement or alternate tires and wheels allow the TPMS to continue to function properly.

NOTE:
- TPMS indicates low tire pressure but does not replace normal tire maintenance. For information on correct tire pressure, please refer to the tables on pages 160 and 161, or consult your Volvo retailer.

Erasing warning messages
When a low tire pressure warning message has been displayed, and the tire pressure warning light has come on:

pg. 163 Wheels and tires

Tire Pressure Monitoring System (TPMS) - option on certain U.S. models only

- Use a tire pressure gauge to check the inflation pressure of all four tires.
- Re-inflate the tire(s) to the correct pressure (consult the tire pressure placard or the tables on pages 160 and 161.
- Drive the vehicle for several minutes at a speed of 20 mph (30 km/h) or faster.

This will erase the warning text and the warning light will go out.

WARNING!

Incorrect inflation pressure could lead to tire failure, resulting in a loss of control of the vehicle.

Changing wheels with TPMS

Please note the following when changing or replacing the factory installed TPMS wheels/ tires on the vehicle:

- Only the factory-mounted wheels are equipped with TPMS sensors in the valves.
- If the vehicle is equipped with a temporary spare tire, this tire does not have a TPMS sensor.
- If wheels without TPMS sensors are mounted on the vehicle, TIRE PRESS SYST SERVICE REQUIRED will be displayed each time the vehicle is driven above 25 mph (40 km/h) for 10 minutes or more.
- Once TPMS sensors are properly installed, the warning message should not reappear.
- Volvo recommends that TPMS sensors be fitted on all wheels used on the vehicle. Volvo does not recommend moving sensors back and forth between sets of wheels.

CAUTION!

When inflating tires with TPMS valves, press the pump's mouthpiece straight onto the valve to help avoid bending or otherwise damaging the valve.

pg. 164 Wheels and tires

Self supporting run flat tires (option)

Self supporting run flat tires

Certain models equipped with the Tire Pressure Monitoring System (TPMS) can also be equipped with

self supporting run flat tires.
Tires of this type have specially reinforced sidewalls that make it possible to continue driving in the event of a drop in inflation pressure. Tires of this type are mounted on special rims.

NOTE: Self supporting run flat tires are only available in conjunction with TPMS.
If a self supporting run flat tire should lose inflation pressure, the yellow TPMS warning symbol ( ) in the instrument panel lights up to alert the driver, and a message will be shown in the text window in the instrument panel.
If this occurs, reduce vehicle speed to a maximum of 50 mph (80 km/h). The vehicle can be driven approximately 50 miles (80 km), or somewhat farther if the vehicle is not heavily loaded. The tire should be replaced as soon as possible.
Hard braking and sudden steering maneuvers should be avoided.
In certain cases, it may be difficult to see which self supporting run flat tire is defective.
To determine which tire is damaged, check the inflation pressure of all four tires.

WARNING!

- Only specially trained persons should mount self supporting run flat tires.
- If self supporting run flat tires are mounted, the vehicle must be equipped with a Tire Pressure Monitoring System.
- After a low pressure warning has been displayed, do not exceed 50 mph (80 km/ h).
- Avoid severe cornering and hard braking, and minimize the distance traveled before replacing the self supporting run flat tire.
- Self supporting run flat tires cannot be repaired. They must be replaced if damaged or punctured.

pg. 165 Wheels and tires

Tire designations

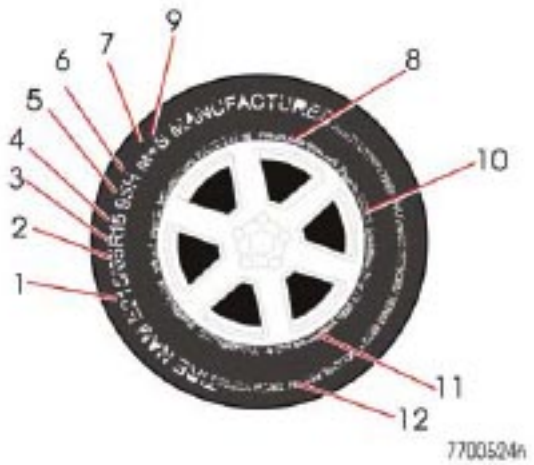

Federal law mandates that tire manufacturers place standardized information on the sidewall of all tires (see the illustration).
The following information is listed on the tire sidewall:
The tire designation (the following figures are examples of a tire designation):

1. 215: the width of the tire (in millimeters) from sidewall edge to sidewall edge. The larger the number, the wider the tire.

2. 65: The ratio of the tire's height to its width.

3. R: Radial tire.

4. 15: The diameter of the wheel rim (in inches).

5. 95: The tire's load index. In this example, a load index of 95 equals a maximum load of 1521 lbs (690 kg).

6. H: The tire's speed rating, or the maximum speed at which the tire is designed to be driven for extended periods of time, carrying a permissible load for the vehicle, and with correct inflation pressure. For example, H indicates a speed rating of 130 mph (210 km/h).

NOTE: This information may not appear on the tire because it is not required by law.

7. M+S or M/S = Mud and Snow, AT = All Terrain, AS = All Season

8. U.S. DOT Tire Identification Number (TIN): This begins with the letters "DOT" and indicates that the tire meets all federal standards. The next two numbers or letters are the plant code where it was manufactured, the next two are the tire size code and the last four numbers represent the week and year the tire was built. For example, the numbers 317 mean the 31st week of 1997. After 2000 the numbers go to four digits. For example, 2501 means the 25th week of 2001. The numbers in between are

marketing codes used at the manufacturer's discretion. This information helps a tire manufacturer identify a tire for safety recall purposes.

9. Tire Ply Composition and Material Used: Indicates the number of plies indicates or the number of layers of rubber-coated fabric in the tire tread and sidewall. Tire manufacturers also must indicate the ply materials in the tire and the sidewall, which include steel, nylon, polyester, and others.

10. Maximum Load: Indicates the maximum load in pounds and kilograms that can be carried by the tire. Refer to the vehicle's tire information placard or the safety certification label, located on the B-Pillar or the driver's door or on the inside of the fuel filler door on Canadian models, for the correct tire pressure for your vehicle.

11. Treadwear, Traction, and Temperature grades: See page 169 for more information.

12. Maximum permissible inflation pressure: the greatest amount of air pressure that should ever be put in the tire. This limit is set by the tire manufacturer.

Glossary of tire terminology

Tire suppliers may have additional markings, notes or warnings such as standard load, radial tubeless, etc.

- **Tire information placard**: A placard showing the OE (Original Equipment) tire sizes, recommended inflation pressure, and the maximum weight the vehicle can carry.
- **Tire Identification Number (TIN)**: A number on the sidewall of each tire providing information about the tire brand and manufacturing plant, tire size and date of manufacturer.
- **Inflation pressure**: A measure of the amount of air in a tire.
- **Standard load**: A class of P-metric or Metric tires designed to carry a maximum load at 35 psi [37 psi (2.5 bar) for Metric tires]. Increasing the inflation pressure beyond this pressure will not increase the tires load carrying capability.
- **Extra load**: A class of P-metric or Metric tires designed to carry a heavier maximum load at 41 psi [43 psi (2.9 bar) for Metric tires]. Increasing the inflation pressure beyond this pressure will not increase the tires load carrying capability.
- **kPa**: Kilopascal, a metric unit of air pressure.
- **PSI**: Pounds per square inch, a standard unit of air pressure.
- **B-pillar**: The structural member at the side of the vehicle behind the front door.
- **Bead area of the tire**: Area of the tire next to the rim.
- **Sidewall of the tire**: Area between the bead area and the tread.
- **Tread area of the tire**: Area of the perimeter of the tire that contacts the road when mounted on the vehicle.

- **Rim**: The metal support (wheel) for a tire or a tire and tube assembly upon which the tire beads are seated.
- **Maximum load rating**: a figure indicating the maximum load in pounds and kilograms that can be carried by the tire. This rating is established by the tire manufacturer.
- **Maximum permissible inflation pressure**: the greatest amount of air pressure that should ever be put in the tire. This limit is set by the tire manufacturer.
- **Recommended tire inflation pressure**: inflation pressure, established by Volvo, which is based on the type of tires that are mounted on a vehicle at the factory. This inflation pressure is affected by the number of occupants in the vehicle, the amount of cargo, and the speed at which the vehicle will be driven for a prolonged period. This information can be found on the tire inflation placard(s) located on the driver's side B-pillar or on the inside of the fuel filler door on Canadian models, and in the tire inflation table in this chapter.
- **Cold tires**: The tires are considered to be cold when they have the same temperature as the surrounding (ambient) air. This temperature is normally reached after the vehicle has been parked for at least 3 hours.

pg. 167 Wheels and tires

Vehicle loading

Properly loading your vehicle will provide maximum return of vehicle design performance.
Before loading your vehicle, familiarize yourself with the following terms for determining your vehicle's weight ratings, with or without a trailer, from the vehicle's Federal/ Canadian Motor Vehicle Safety Standards (FMVSS/CMVSS) label, and the vehicle's tire information placard:

Curb weight
The weight of the vehicle including a full tank of fuel and all standard equipment. It does not include passengers, cargo, or optional equipment.

Capacity weight
All weight added to the curb weight, including cargo and optional equipment. When towing, trailer hitch tongue load is also part of cargo weight.

NOTE: For trailer towing information, please refer to the section "Towing a trailer" on page 145.

Permissible axle weight
The maximum allowable weight that can be carried by a single axle (front or rear). These numbers are shown on the Federal/Canadian Motor Vehicle Safety Standards (FMVSS/ CMVSS) label. The total load on each axle must never exceed its maximum permissible weight.

Gross vehicle weight (GVW)

The vehicle's curb weight + cargo + passengers.

NOTE:
- The location of the various labels in your vehicle can be found on page 213.
- A table listing important weight limits for your vehicle can be found on page 215.

Steps for Determining Correct Load Limit
- Locate the statement "the combined weight of occupants and cargo should never exceed XXX pounds" on your vehicle's placard.
- Determine the combined weight of the driver and passengers that will be riding in your vehicle.
- Subtract the combined weight of the driver and passengers from XXX kilograms or XXX pounds.
- The resulting figure equals the available amount of cargo and luggage load capacity. For example, if the "XXX" amount equals 1400 lbs. and there will be five 150 lb. passengers in your vehicle, the amount of available cargo and luggage load capacity is 650 lbs. (1400- 750 (5 x 150) = 650 lbs.)
- Determine the combined weight of luggage and cargo being loaded on the vehicle. That weight may not safely exceed the available cargo and luggage load capacity calculated in Step 4.
- If your vehicle will be towing a trailer, load from your trailer will be transferred to your vehicle. Consult this manual[1] to determine how this reduces the available cargo and luggage load capacity of your vehicle.

1. See "Towing a trailer" on page 145.

pg. 168 Wheels and tires

Vehicle loading

WARNING!

- Exceeding the permissible axle weight, gross vehicle weight, or any other weight rating limits can cause tire overheating resulting in permanent deformation or catastrophic failure.
- Do not use replacement tires with lower load carrying capacities than the tires that were original equipment on the vehicle because this will lower the vehicle's GVW rating. Replacement tires with a higher limit than the originals do not increase the vehicle's GVW rating limitations.

pg. 169 Wheels and tires

Uniform Tire Quality Grading

ALL PASSENGER VEHICLE TIRES MUST CONFORM TO FEDERAL SAFETY REQUIREMENTS IN ADDITION TO THESE GRADES
Quality grades can be found, where applicable, on the tire sidewall between the tread shoulder and maximum section width. For example:
Treadwear 200 Traction AA Temperature A

TREADWEAR
The treadwear grade is a comparative rating based on the wear rate of the tire when tested under controlled conditions on a specified government test course. For example, a tire graded 150 would wear one and one half (1 1/2) times as well on the government course as a tire graded 100. The relative performance of tires depends upon the actual conditions of their use, however, and many depart significantly from the norm due to variation in driving habits, maintenance practices and differences in road characteristics and climate.

TRACTION
The traction grades, from highest to lowest, are AA, A, B, and C, as measured under controlled conditions on specified government test surfaces of asphalt and concrete. A tire marked C may have poor traction performance.

WARNING!

The traction grade assigned to this tire is based on braking (straight-ahead) traction tests and is not a measure of cornering (turning) traction.

TEMPERATURE
The temperature grades are AA (the highest), A, B, and C, representing the tire's resistance to the generation of heat and its ability to dissipate heat when tested under controlled conditions on a specified indoor laboratory test wheel. Sustained high temperature can cause the material of the tire to degenerate and reduce tire life, and excessive temperature can lead to sudden tire failure. The grade C corresponds to a minimum level of performance that all passenger vehicle tires must meet under the Federal Motor Safety Standard No. 109. Grades B and A represent higher levels of performance on the laboratory test wheel than the minimum required by law.

WARNING!

The temperature grade for this tire is established for a tire that is properly inflated and not overloaded. Excessive speed, under-inflation, or excessive loading, either separately or in combination, can cause heat buildup and tire failure.

pg. 170 Wheels and tires

Snow chains, snow tires, studded tires

Snow chains
Snow chains can be used on your Volvo with the following restrictions:
- Snow chains should be installed on front wheels only. Use only Volvo approved snow chains.
- If accessory, aftermarket or "custom" tires and wheels are installed and are of a size different than the original tires and wheels, chains in some cases CANNOT be used. Sufficient clearances between chains and brakes, suspension and body components must be maintained.
- Some strap-on type chains will interfere with brake components and therefore CANNOT be used.
- All Wheel Drive models: Snow chains should only be installed on the front wheels. Only chains adapted for AWD models should be used.

Consult your Volvo retailer for additional snow chain information.

CAUTION!

- Check local regulations regarding the use of snow chains before installing. Always follow the chain manufacturer's installation instructions carefully. Install chains as tightly as possible and retighten periodically.
- Never exceed the chain manufacturer's specified maximum speed limit. (Under no circumstances should you exceed 31 mph (50 km/h)).
- Avoid bumps, holes or sharp turns when driving with snow chains.
- The handling of the vehicle can be adversely affected when driving with chains. Avoid fast or sharp turns as well as locked wheel braking.

Snow tires, studded tires[1]
Tires for winter use:
- Owners who live in or regularly commute through areas with sustained periods of snow or icy driving conditions are strongly advised to fit suitable winter tires to help retain the highest degree of traction.
- It is important to install winter tires on all four wheels to help retain traction during cornering, braking, and accelerating. Failure to do so could reduce traction to an unsafe level or adversely affect handling.
- Do not mix tires of different design as this could also negatively affect overall tire road grip.
- Winter tires wear more quickly on dry roads in warm weather. They should be removed when the winter driving season has ended.
- Studded tires should be run-in 300-600 miles (500-1000 km) during which the vehicle should be driven as smoothly as possible to give the studs the opportunity to seat properly in the tires. The tires should have the same rotational direction throughout their entire lifetime.

NOTE: Please consult state or provincial regulations restricting the use of studded winter tires before installing such tires.

1. Where permitted

pg. 171 Wheels and tires

Temporary spare

The spare tire in your vehicle is called a "Temporary Spare".
Recommended tire pressure (see the placard on the B-pillar or on the fuel filler door) should be maintained irrespective of which position on the vehicle the temporary spare tire is used on.
In the event of damage to this tire, a new one can be purchased from your Volvo retailer.

WARNING!

Current legislation prohibits the use of the "Temporary Spare" tire other than as a temporary replacement for a punctured tire. It must be replaced as soon as possible by a standard tire. Road holding and handling may be affected with the "Temporary Spare" in use. Do not exceed 50 mph (80 km/h). Do not drive farther than 50 miles (80 km) on a temporary spare tire.

CAUTION!

The vehicle must not be driven with wheels of different dimensions or with a spare tire other than the one that came with the vehicle. The use of different size wheels can seriously damage your vehicle's transmission.

pg. 172 Wheels and tires

Temporary spare

1-jack, 2-tool bag, 3-securing bracket, 4-spare tire

The spare tire, jack and tool bag are located under the floor of the cargo space. To access the spare tire:
- Remove the rear hinged floor panel by raising it approx. 6 inches (15 cm) and then pulling it backwards out of the cargo area.
- Unscrew and remove the accessory plastic floor tray (if fitted).
- Unstrap and lift out the jack and tool bag.
- Unscrew the securing bracket and remove the spare tire from the storage well.
- When putting the tire back into the well, perform these steps in reverse order. Make sure the spare tire, jack and tool bag are properly secured.

WARNING!

Make sure that the spare tire, jack and tool bag are properly secured with the securing bracket and strap to help keep these components in place in the event of a sudden stop.

pg. 173 Wheels and tires

Temporary spare

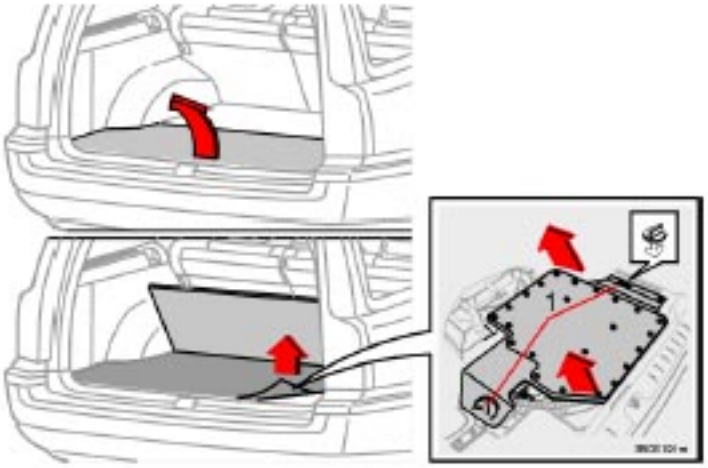

Spare tire, tool bag, jack - vehicles with subwoofer (option)
The spare tire, jack and tool bag are located under the floor of the cargo space in a compartment in front of the spare tire. To access the spare tire:
- Remove the rear hinged floor panel by raising it approx. 6 inches (15 cm) and then pulling it rearward out of the cargo area.
- Raise the other floor panel to upright position and lock it there.
- Remove the mat.
- Loosen the wheel and turn the clip 90°.
- Lift the subwoofer inward-upward with both hands and tilt it leftward.
- Unstrap and lift out the jack and tool bag.
- Unscrew the securing bracket and remove the spare tire from the storage well.
- When putting the tire and subwoofer back into place, perform these steps in reverse order. Make sure the spare tire, jack, tool bag and subwoofer are properly secured.

WARNING!

Make sure that the spare tire, jack and tool bag are properly secured with the securing bracket and strap to help keep these components in place in the event of a sudden stop.

pg. 174 Wheels and tires

Changing wheels

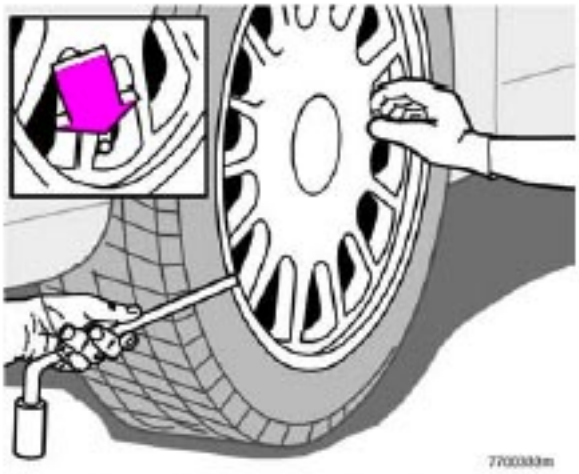

Insert flat end of lug wrench and turn/pull straight out

Changing wheels

The spare wheel is located under the rear hatch in the cargo area floor. The jack and crank are secured in the wheel recess (see pages 171 and 173).

There are two jack attachment points on each side of the vehicle (see illustration on next page).

To change a wheel:

- Engage the parking brake.
- Put the gear selector in (P)ark (automatic transmission) or reverse (manual transmission).

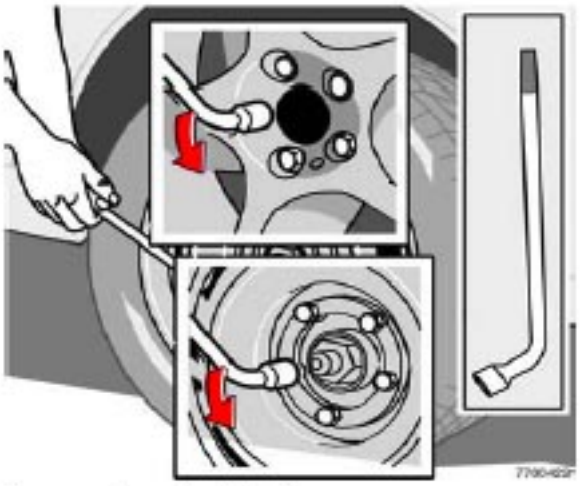

Loosen the wheel bolts

- Remove the wheel cap (where applicable) using the lug wrench in the tool bag.
- With the vehicle still on the ground, use the lug wrench to loosen the wheel bolts 1/2 - 1 turn by exerting downward pressure. Turn the bolts counterclockwise to loosen.

CAUTION!

- The vehicle must not be driven with wheels of different dimensions or with a spare tire other than the one that came with the vehicle. The use of different size wheels can seriously damage your vehicle's transmission.
- Correct tightening torque on wheel bolts must be observed. The wheel bolts should never be greased or lubricated. The extended, chromed wheel bolts must not be used with steel rims, as they make it impossible to fit the hub caps.
- Locking wheel bolts can be used on both aluminum and steel wheels. If hub caps are used on steel wheels, the locking wheel bolt should be mounted in the hole as far from the tire's inflation valve as possible. It would otherwise not be possible to mount the hub cap on the wheel.

pg. 175 Wheels and tires

Changing wheels

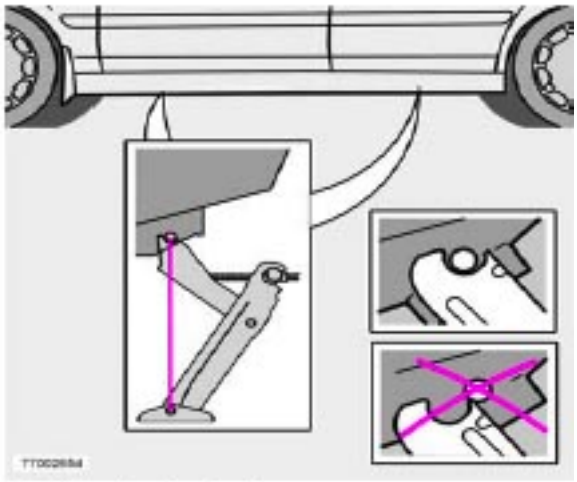

Positioning the jack

- Position the jack correctly on the bar in the attachment (see illustration above) and crank while simultaneously guiding the base of the jack to the ground. The base of the jack must be flat on a level, firm, non-slippery surface. Before raising the vehicle, check that the jack is still correctly positioned in the attachment.
- Raise the vehicle until the wheel to be changed is lifted off the ground.
- Unscrew the wheel bolts completely and carefully remove the wheel so as not to damage the threads on the studs.

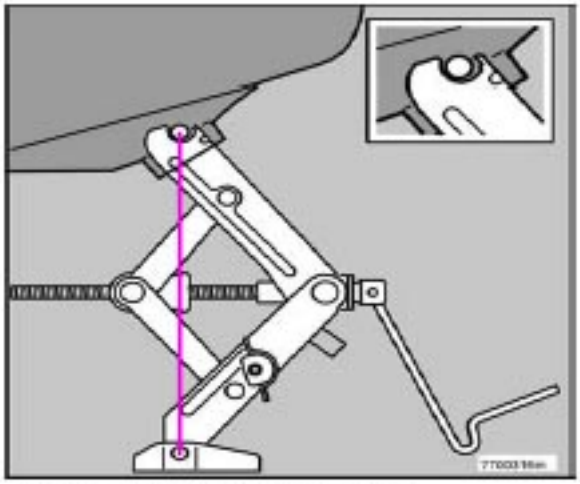

Jack on All Wheel Drive models

NOTE: To avoid excessive wear and the necessity of rebalancing, mark and reinstall wheels in the same location and position as before removal. To lessen the chance of imbalance, each wheel hub is equipped with a guide stud to ensure that a removed wheel can be reinstalled in its original position (as when changing over to winter tires/wheels).

Installing the wheel
- Clean the contact surfaces on the wheel and hub.
- Lift the wheel and place it on the hub.
- Install the wheel bolts and tighten hand-tight. Using the lug wrench, tighten crosswise until all bolts are snug.
- Lower the vehicle to the ground and alternately tighten the bolts crosswise to 102 ft. lbs. (140 Nm).
- Install the wheel cap (where applicable).

pg. 176 Wheels and tires

Changing wheels

WARNING!

- The jack must correctly engage the bar in the jack attachment. The vehicle's weight must not rest on the jack attachment. See illustration " Positioning the jack" on the previous page.
- Be sure the jack is on a firm, level, non-slippery surface.
- Never allow any part of your body to be extended under a vehicle supported by a jack.
- Use the jack intended for the vehicle when replacing a wheel. For any other job, use stands to support the side of the vehicle being worked on.
- Apply the parking brake and put the gear selector in the (P)ark position (or reverse on manual transmissions).
- Block the wheels standing on the ground, use rigid wooden blocks or large stones.
- The jack should be kept well-greased.

Contents | Top of Page

2 0 0 7
VOLVO
XC70

Vehicle care

pg. 177 Vehicle care

Washing and cleaning the car	178
Paint touch up	182

pg. 178 Vehicle care

Washing and cleaning the car

Washing the vehicle

- The vehicle should be washed at regular intervals since dirt, dust, insects and tar spots adhere to the paint and may cause damage. It is particularly important to wash the vehicle frequently in the wintertime to prevent corrosion, when salt has been used on the roads.
- When washing the vehicle, do not expose it to direct sunlight. Use lukewarm water to soften the dirt before you wash with a sponge, and plenty of water, to avoid scratching.
- Bird droppings: Remove from paintwork as soon as possible. Otherwise the finish may be permanently damaged.
- A detergent can be used to facilitate the softening of dirt and oil.
- A water-soluble grease solvent may be used in cases of sticky dirt. However, use a wash place equipped with a drainage separator.
- Dry the vehicle with a clean chamois and remember to clean the drain holes in the doors and rocker panels.
- Tar spots can be removed with kerosene or tar remover after the vehicle has been washed.
- A stiff-bristle brush and lukewarm soapy water can be used to clean the wiper blades. Frequent cleaning improves visibility considerably.
- Wash off the dirt from the underside (wheel housings, fenders, etc.).
- In areas of high industrial fallout, more frequent washing is recommended.

CAUTION!

During high pressure washing, the spray mouthpiece must never be closer to the vehicle than 13" (30 cm). Do not spray into the locks.
When washing or steam cleaning the engine, avoid spraying water or steam directly on the electrical components or toward the rear side of the engine.

Special moonroof cautions:

- Always close the moonroof and sun shade before washing your vehicle.
- Never use abrasive cleaning agents on the moonroof.
- Never use wax on the rubber seals around the moonroof.

- After cleaning the engine, the spark plug wells should be inspected for water and blown dry if necessary.

Suitable detergents: Special vehicle washing detergents should be used. A suitable mixture is about 2.5 fl. oz. (8.5 cl) of detergent to 2.6 US gal. (10 liters) of warm water. After washing with a detergent the vehicle should be well rinsed with clean water.

Exterior plastic components
Cleaning exterior plastic components should be done with a cleaning agent specially designed for this purpose. Solvents or stain removers should not be used. Consult your Volvo retailer.

NOTE: When washing the vehicle, remember to remove dirt from the drain holes in the doors and sills.

WARNING!

When the vehicle is driven immediately after being washed, apply the brakes several times in order to remove any moisture from the brake linings. Engine cleaning agents should not be used when the engine is warm. This constitutes a fire risk.

pg. 179 Vehicle care

Washing and cleaning the car

Automatic washing - simple and quick
- We do NOT recommend washing your vehicle in an automatic wash during the first six months (because the paint will not have hardened sufficiently).

- An automatic wash is a simple and quick way to clean your vehicle, but it is worth remembering that it may not be as thorough as when you yourself go over the vehicle with sponge and water. Keeping the underbody clean is most important, especially in the winter. Some automatic washers do not have facilities for washing the underbody.
- Before driving into an automatic car wash, make sure that side view mirrors, auxiliary lamps, etc, are secure, and that any antenna(s) are retracted or removed. Otherwise there is risk of the machine dislodging them.

Exterior lighting

Condensation may form temporarily on the inside of the lenses of exterior lights such as headlights, fog lights, or tail lights. This is normal and the lights are designed to withstand moisture. Normally, condensation will dissipate after the lights have been on for a short time.

Polishing and waxing

- Normally, polishing is not required during the first year after delivery, however, waxing may be beneficial.
- Before applying polish or wax the vehicle must be washed and dried. Tar spots can be removed with kerosene or tar remover. Difficult spots may require a fine rubbing compound.
- After polishing use liquid or paste wax.
- Several commercially available products contain both polish and wax.
- Waxing alone does not substitute for polishing a dull surface.
- A wide range of polymer-based waxes can be purchased today. These waxes are easy to use and produce a long-lasting, high-gloss finish that protects the bodywork against oxidation, road dirt and fading.
- Do not polish or wax your vehicle in direct sunlight (the surface of the vehicle should not be warmer than 113° F (45° C).

CAUTION!

Volvo does not recommend the use of long-life or durable paint protection coatings, some of which may claim to prevent pitting, fading, oxidation, etc. These coatings have not been tested by Volvo for compatibility with your vehicle's clear coat. Some of them may cause the clear coat to soften, crack, or cloud. Damage caused by application of paint protection coatings may not be covered under your vehicle's paint warranty.

Side windows with the water repellent glass coating-option

- Do not apply wax, degreasing agents, etc to this glass. This could damage the coating.
- Clean the glass surface with care to avoid scratching.
- Use only suitable plastic scrapers to remove ice or snow from the windows.

NOTE: The water repellent coating is subject to natural wear.

pg. 180 Vehicle care

Washing and cleaning the car

In order to maintain the coating's water repellent characteristics, it should be treated with a special compound that is available at your Volvo retailer.
This treatment should be carried out for the first time after three years, and thereafter once a year.

pg. 181 Vehicle care

Washing and cleaning the car

Cleaning the upholstery

Fabric
Clean with soapy water or a detergent. For more difficult spots caused by oil, ice cream, shoe polish, grease, etc., use a clothing/ fabric stain remover. Consult your Volvo retailer.

Interior plastic components
Cleaning interior plastic components should be done with a cleaning agent specially designed for this purpose. Consult your Volvo retailer.

Alcantera™ suede-like material
Suede-like upholstery can be cleaned with a soft cloth and mild soap solution.

Leather care
Volvo's leather upholstery is manufactured with a protectant to repel soiling. Over time, sunlight, grease and dirt can break down the protection. Staining, cracking, scuffing, and fading can result.
Volvo offers an easy-to-use, non-greasy leather care kit formulated to clean and beautify your vehicle's leather, and to renew the protective qualities of its finish. The cleaner removes dirt and oil buildup. The light cream protectant restores a barrier against soil and sunlight.
Volvo also offers a special leather softener that should be applied after the cleaner and protectant. It leaves leather soft and smooth, and reduces friction between leather and other finishes in the vehicle.
Volvo recommends cleaning, protecting and conditioning your vehicle's leather two to four times a year.
Ask your Volvo retailer about Leather Care Kit 951 0251 and Leather Softener 943 7429.

CAUTION!

- Under no circumstances should gasoline, naphtha or similar cleaning agents be used on the plastic or the leather since these can cause damage.
- Take extra care when removing stains such as ink or lipstick since the coloring can spread.
- Use solvents sparingly. Too much solvent can damage the seat padding.
- Start from the outside of the stain and work toward the center.
- Sharp objects (e.g. pencils or pens in a pocket) or velcro fasteners on clothing may damage the textile upholstery.
- Clothing that is not colorfast, such as new jeans or suede garments, may stain the upholstery.

Cleaning the seat belts
Clean only with lukewarm water and a mild soap solution.

Cleaning floor mats
The floor mats should be vacuumed or brushed clean regularly, especially during winter when they should be taken out for drying. Spots on textile mats can be removed with a mild detergent.

Bear in mind
- Take extra care when removing stains such as ink or lipstick since the coloring can spread.
- Use solvents sparingly. Too much solvent can damage the seat padding.
- Start from the outside of the stain and work toward the center.

pg. 182 Vehicle care

Paint touch up

Model plate with paint color code[1]

Paint damage requires immediate attention to avoid rusting. Make it a habit to check the finish regularly - when washing the vehicle for instance. Touch-up if necessary.

Paint repairs require special equipment and skill. Contact your Volvo retailer for any extensive damage.

Color code
Make sure you have the right color. When ordering touch-up paint from your Volvo retailer, use the paint code indicated on the model plate (1 in the illustration above).

Minor stone chips and scratches
Material:
- Primer - can
- Paint - touch-up pen
- Brush
- Masking tape
- If the stone chip has not gone down to the bare metal and an undamaged color coat remains, you can add paint immediately after removing dirt.

NOTE: When touching up the vehicle, it should be clean and dry. The surface temperature should be above 60° F (15° C).

Minor scratches on the surface
If the stone chip has not penetrated down to the metal and an undamaged layer of paint remains, the touch-up paint can be applied as soon as the spot has been cleaned.

Deep scratches
- Place a strip of masking tape over the damaged surface. Pull the tape off so that any loose flakes of paint adhere to it.
- Thoroughly mix the primer and apply it with a small brush. When the primer surface is dry, the paint can be applied using a brush. Mix the paint thoroughly; apply several thin paint coats and let dry after each application.
- If there is a longer scratch, you may want to protect surrounding paint by masking it off.

1. The model plate is located on the passenger's side center door pillar.

Contents | Top of Page

2 0 0 7
VOLVO
XC70

Maintenance and servicing

pg. 183 Maintenance and servicing

Volvo service	184
Maintaining your car	185
Emission inspection readiness	186
Working on your car	187
Hood and engine compartment	189
Engine oil	190
Fluids	192
Wiper blades	194
Battery	195
Replacing bulbs	198
Fuses	205

pg. 184 Maintenance and servicing

Volvo service

Maintenance service
Periodic maintenance will help keep your vehicle running well. Your Warranty and Service Records Information booklet provides a comprehensive maintenance schedule up to 150,000 miles (240,000 km) of vehicle service. This maintenance program contains inspections and services necessary for the proper function of your vehicle, and includes components that affect vehicle emissions. The maintenance services contain several checks that require special instruments and tools and therefore must be performed by a qualified technician. Volvo advises you to follow the service program outlined in this booklet. To keep your Volvo in top condition, specify time-tested and proven Genuine Volvo Parts and

Accessories.

The Federal Clean Air Act - U.S.
The Federal Clean Air Act requires vehicle manufacturers to furnish written instructions to the ultimate purchaser to assure the proper servicing and function of the components that control emissions. These services, which are listed in the "Warranty and Service Records Information booklet," are not covered by the warranty. You will be required to pay for labor and material used.

Maintenance services
Your Volvo passed several major inspections before it was delivered to you, in accordance with Volvo specifications. The maintenance services outlined in the Warranty and Service Records Information booklet, many of which will positively affect your vehicle's emissions, should be performed as indicated. It is recommended that receipts for vehicle emission services be retained in case questions arise concerning maintenance.
Inspection and service should also be performed anytime a malfunction is observed or suspected.

Vehicle Event Data (Black Box)
Your vehicle's driving and safety systems employ computers that monitor, and share with each other, information about your vehicle's operation. One or more of these computers may store what they monitor, either during normal vehicle operation or in a crash or near-crash event. Stored information may be read and used by:

- Volvo Car Corporation
- service and repair facilities
- law enforcement or government agencies
- others who may assert a legal right to know, or who obtain your consent to know such information.

Applicable warranties
In accordance with applicable U.S. and Canadian regulations, the following list of warranties is provided.
- New Car Limited Warranty
- Parts and Accessories Limited Warranty
- Corrosion Protection Limited Warranty
- Seat Belt and Supplemental Restraint Systems Limited Warranty
- Emission Design and Defect Warranty
- Emission Performance Warranty

These are the Federal warranties; other warranties are provided as required by state/ provincial law. Refer to your separate Warranty and Service Records Information booklet for detailed information concerning each of the warranties.

pg. 185 Maintenance and servicing

Maintaining your car

Owner maintenance
Periodic maintenance requirements and intervals are described in your vehicle's Warranty and Service Records Information booklet.
The following points can be carried out between the normally scheduled maintenance services.

Each time the vehicle is refueled:
- Check the engine oil level
- Clean the windshield, windshield wipers, headlights, and tail lights

Monthly:
- Check cold tire pressure in all tires. Inspect the tires for wear.
- Check that engine coolant and other fluid levels are between the indicated "min" and "max" markings.
- Clean interior glass surfaces with a glass cleaner and soft paper towels.
- Wipe driver information displays with a soft cloth.
- Visually inspect battery terminals for corrosion. Corrosion may indicate a loose terminal connector, or a battery near the end of its useful service life. Consult your Volvo retailer for additional information.

As needed:
- Wash the vehicle, including the undercarriage, to reduce wear that can be caused by a buildup of dirt, and corrosion that can be caused by salt residues.
- Clean leaves and twigs from air intake vents at the base of the windshield, and from other places where they may collect.

NOTE: Complete service information for qualified technicians is available online for purchase or subscription at www.volvotechinfo.com.

pg. 186 Maintenance and servicing

Emission inspection readiness

What is an Onboard Diagnostic System (OBD II)?
OBD II is part of your vehicle's computerized engine management system. It stores diagnostic information about your vehicle's emission controls. It can light the Check Engine light (MIL) if it detects an emission control "fault." A "fault" is a component or system that is not performing within an expected range. A fault may be permanent or temporary. OBD II will store a message about any fault.

How do states use OBD II for emission inspections?
Many states connect a computer directly to a vehicle's OBD II system. The inspector can then read "faults." In some states, this type of inspection has replaced the tailpipe emission test.

How can my vehicle fail OBD II emission inspection?
Your vehicle can fail OBD II emission inspection for any of the following reasons.
- If your Check Engine (MIL) light is lit, your vehicle may fail inspection.
- If your vehicle's Check Engine light was lit, but went out without any action on your part, OBD II will still have a recorded fault. Your vehicle may pass or fail, depending on the inspection practices in your area.
- If you had recent service that required disconnecting the battery, OBD II diagnostic information may be incomplete and "not ready" for inspection. A vehicle that is not ready may fail inspection.

How can I prepare for my next OBD II emission inspection?
- If your Check Engine (MIL) light is lit - or was lit but went out without service, have your vehicle diagnosed and, if necessary, serviced by a qualified Volvo technician.
- If you recently had service for a lit Check Engine light, or if you had service that required disconnecting the battery, a period of driving is necessary to bring the OBD II system to "ready" for inspection. A half-hour trip of mixed stop-and-go/ highway driving is typically needed to allow OBD II to reach readiness. Your Volvo retailer can provide you with more information on planning a trip.
- Maintain your vehicle in accordance with your vehicle's maintenance schedule.

pg. 187 Maintenance and servicing

Working on your car

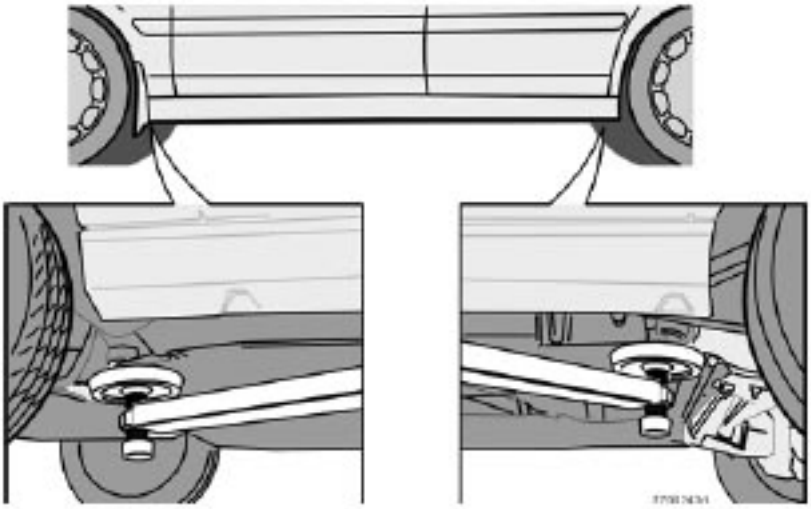

Note the following before you begin working on your vehicle

Battery

- Ensure that the battery cables are correctly connected and tightened.
- Never disconnect the battery when the engine is running (e.g. when replacing the battery).
- Never use a fast charger to charge the battery. The battery cables should be disconnected when recharging.
- The battery contains acid that is both corrosive and poisonous. It is important that the battery is handled in an environmentally friendly way. Let your Volvo dealer assist you.

Hoisting the vehicle

If a garage jack is used to lift the vehicle, the two jack attachments points should be used. They are specially reinforced to bear the weight of the vehicle. A garage jack can also be placed under the front of the engine support frame. Take care not to damage the splash guard under the engine. Ensure that the jack is positioned so that the vehicle cannot slide off it. Always use axle stands or similar structures.
If a two-post hoist is used to lift the vehicle, the front and rear lift arm pads should be centered under the reinforced lift plates on the inboard edge of the sill rail (see illustration).

pg. 188 Maintenance and servicing

Working on your car

WARNING!

The vehicle ignition system has very high voltage!
The voltage in the ignition system is dangerous!
Do not touch spark plugs, ignition cables or the ignition coil when the engine is running or the ignition is switched on!
The ignition should be switched off when:

- Conducting engine tests.
- Replacing parts in the ignition system, such as spark plugs, ignition coil, distributor, ignition cables, etc.

WARNING!

Never try to repair any part of the SRS or SIPS bag systems yourself. Any interference in the system could cause malfunction and serious injury. Any work should only be performed by an authorized Volvo retailer.

Belt check
Check the belt regularly to make sure it is in good condition and is clean. A worn or dirty belt can cause poor cooling and low alternator output as well as impair the operation of the power steering and the air conditioning unit.

NOTE: The drive belt is equipped with a self-tensioning mechanism and requires no adjustment between changes.

WARNING!

The engine must not be running when this check is performed.

Check coolant level
The cooling system must be filled with coolant and not leak to operate at maximum efficiency. Check the coolant level regularly. The level should be between the "MAX" and "MIN" marks on the expansion tank. The check should be made with particular thoroughness when the engine is new or when the cooling system has been drained.
Do not remove the filler cap other than for topping up with coolant. Frequent removal may prevent coolant circulation between the engine and the expansion tank during engine warm up and cooling.

Changing coolant
Normally, the coolant does not need to be changed. If the system must be drained, consult your Volvo retailer.

NOTE: Do not top off with water only. This reduces the rust-protective and antifreeze qualities of the coolant and has a lower boiling point. It can also cause damage to the cooling system if it should freeze. Top off with Volvo Genuine Coolant/Antifreeze only (a 50/ 50 mix of water and antifreeze).

CAUTION!

The cooling system must always be kept filled to the correct level. If it is not kept filled, there can be high local temperatures in the engine which could result in damage. Different types of antifreeze/ coolant may not be mixed.

WARNING!

Never remove the radiator cap while the engine is warm. Wait until the vehicle cools.

pg. 189 Maintenance and servicing

Hood and engine compartment

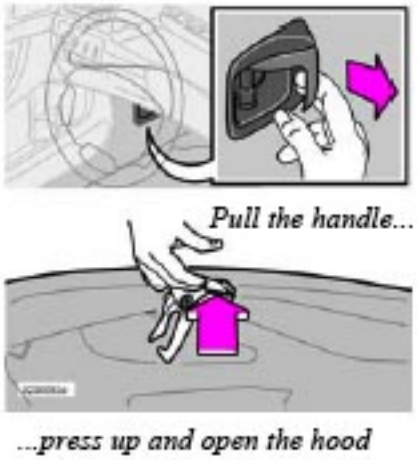

Opening the hood
- Pull the lever located under the left side of the dash to release the hood lock.
- Lift the hood slightly.
- Press up the release control located under the front edge of the hood (at the center) and lift.

WARNING!

Check that the hood locks properly when closed!

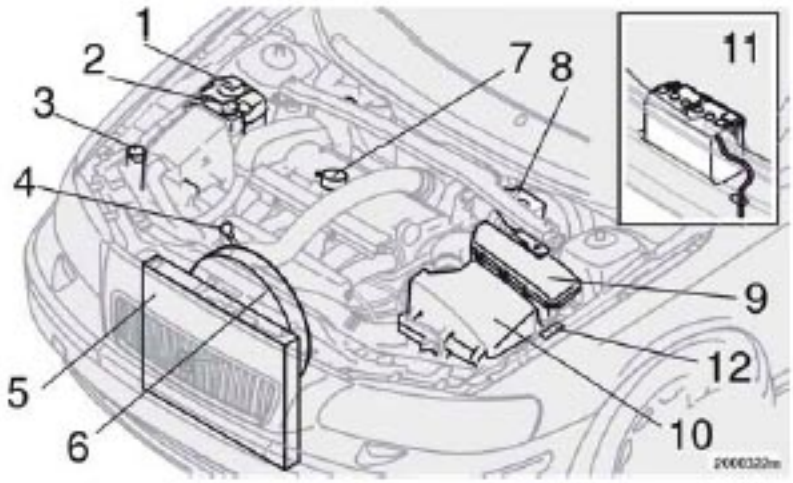

Engine compartment
1. Expansion tank - coolant
2. Power steering fluid reservoir
3. Washer fluid reservoir
4. Dipstick - engine oil
5. Radiator
6. Cooling fan
7. Oil filler cap - engine
8. Clutch/brake fluid reservoir
9. Relay/fuse box
10. Air cleaner
11. Battery (under floor in cargo area)
12. Data plate

WARNING!

The cooling fan (6) may start or continue to operate (for up to 6 minutes) after the engine has been switched off.

pg. 190 Maintenance and servicing

Engine oil

Oil specifications
Engine oil must meet the minimum ILSAC specification GF-3, API SL, and ACEA A1/ B1. Lower quality oils may not offer the same fuel economy, engine performance, or engine protection.

Volvo recommends Castrol.

Depending on your driving habits, premium or synthetic oils may provide superior fuel economy and engine protection. Consult your Volvo retailer for recommendations on premium or synthetic oils.
Oil additives must not be used.

NOTE: Synthetic oil is not used when the oil is changed at the normal maintenance services. This oil is only used at customer request, at additional charge. Please consult your Volvo retailer.

Oil viscosity (stable ambient temperatures)
Operation in hot climates
When temperatures exceed 86° F (30° C) in your area, Volvo recommends, for the protection of your engine, that you use a heavier weight oil, such as such as SAE 5W- 40 or 0W-40. See the viscosity chart.

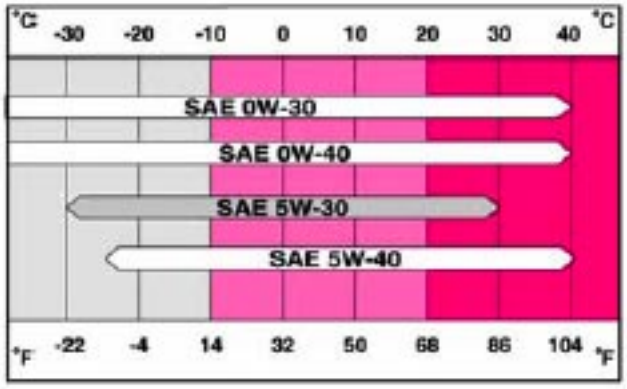

Operation in temperate climates
Incorrect viscosity oil can shorten engine life. Under normal use when temperatures do not exceed 86° F (30° C), SAE 5W-30 will provide good fuel economy and engine protection. See the viscosity chart.

Extreme engine operation
Synthetic oils meeting SAE 0W-30 or 0W-40 and complying with oil quality requirements are recommended for driving in areas of sustained temperature extremes (hot or cold), when towing a trailer over long distances, and for prolonged driving in mountainous areas.

American Petroleum Institute (API) symbol

American Petroleum Institute (API) symbol
The API Service Symbol "donut" is divided into three parts:
- The upper section describes the oil's performance level.
- The center identifies the oil's viscosity.
- The lower section indicates whether the oil has demonstrated energy-conserving properties in a standard test in comparison to a reference oil.

pg. 191 Maintenance and servicing

Engine oil

Changing engine oil and oil filter
See the previous page for oil specifications and page 217 for oil volumes. Refer to the Warranty and Service Records Information booklet for information on the oil change intervals.

NOTE:
- Volvo does not recommend the use of oil additives.
- Synthetic oil is not used when the oil is changed at the normal maintenance intervals except at owner request and at additional charge. Please consult your Volvo retailer.

Checking and adding oil
The oil level should be checked every time the vehicle is refueled. This is especially important during the period up to the first scheduled maintenance service.
- The vehicle should be parked on a level surface when the oil is checked.
- **If the engine is warm**, wait for at least 10-15 minutes after the engine has been switched off before checking the oil.

Checking the oil
- Pull out the dipstick and wipe it with a lint-free rag.
- Reinsert the dipstick, pull it out, and check the oil level.
- Add oil if necessary. If the level is close to the MIN mark, add approximately 1 US quart (1 liter) of oil.
- Run the engine until it reaches normal operating temperature.
- Switch off the engine and wait for at least 10-15 minutes and recheck the oil level. If necessary, add oil until the level is near the mark.

CAUTION!

- Not checking the oil level regularly can result in serious engine damage if the oil level becomes too low.
- Never fill oil above the MAX mark. This could cause an increase in oil consumption.
- Not checking the oil level regularly can result in serious engine damage if the oil level becomes too low.
- Always add oil of the same type and viscosity as already used.

WARNING!

Do not allow oil to spill onto or come into contact with hot exhaust pipe surfaces.

R-models

R-models are equipped with an oil level warning system. If the engine oil level becomes too low, the warning light in the instrument panel will come on and a warning will be displayed in the text window.

- If the yellow warning light in the instrument panel comes on and the text OIL LEVEL LOW/FILL OIL is displayed, stop safely as soon as possible and add 1 qt (1 liter) of oil. Check the oil level with the dipstick before restarting the engine.
- If the red warning light in the instrument panel comes on and the text OIL LEVEL LOW/STOP SAFELY-->STOP ENGINE -->SEE MANUAL is displayed, stop safely as soon as possible and add oil (not more than 1.6 qts (1.5 liters). Check the oil level with the dipstick before restarting the engine. If no oil level is visible on the dipstick, do not start the engine. Have the vehicle towed to an authorized Volvo retailer.

pg. 192 Maintenance and servicing

Fluids

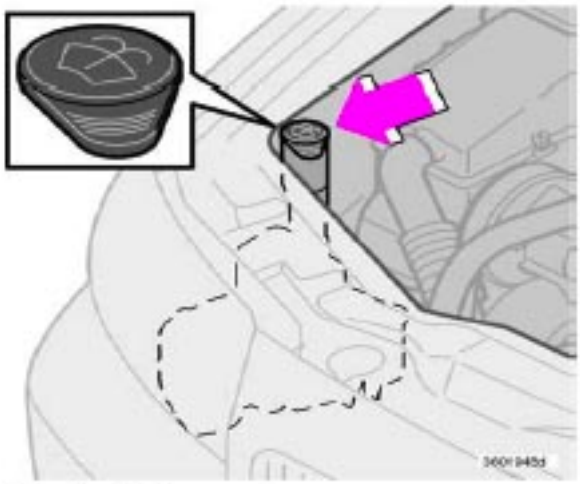

Washer fluid reservoir

Washer fluid reservoir

The washer fluid reservoir is located in the engine compartment and holds approx. 6.8 US qts (6.4 liters) or 4.8 US qts (4.5 liters) on the V70 R.

During cold weather, the reservoir should be filled with windshield washer solvent containing antifreeze.

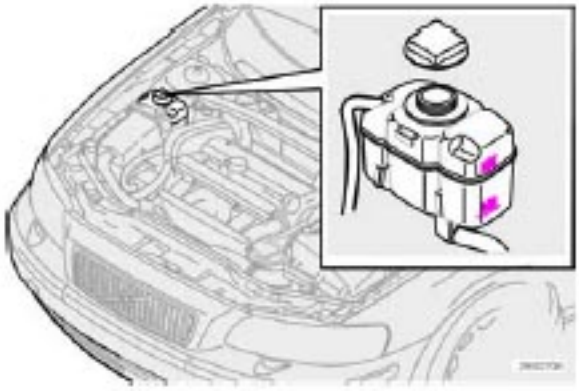

Coolant reservoir

Changing coolant

Normally, the coolant does not need to be changed. If the system must be drained, consult your Volvo retailer.

NOTE: Do not top off with water only. This reduces the rust-protective and antifreeze qualities of the coolant and has a lower boiling point. It can also cause damage to the cooling system if it should freeze. Top off with Volvo Genuine Coolant/Antifreeze only (a 50/ 50 mix of water and antifreeze).

CAUTION!

The cooling system must always be kept filled to the correct level. If it is not kept filled, there can be high local temperatures in the engine which could result in damage. Different types of antifreeze/ coolant may not be mixed.
Check coolant regularly!

WARNING!

- Never remove the radiator cap while the engine is warm. Wait until the vehicle cools.
- If it is necessary to top up the coolant when the engine is warm, unscrew the expansion tank cap slowly so that the overpressure dissipates.

pg. 193 Maintenance and servicing

Fluids

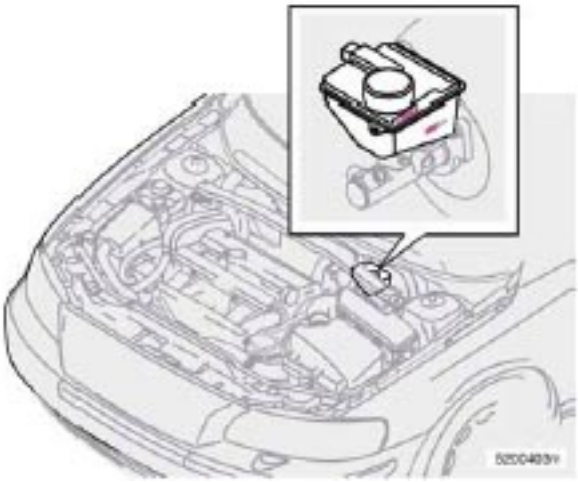

Clutch and brake fluid reservoir
The clutch and brake fluid should always be above the MIN mark on the side of the reservoir. Check, without removing the cap, that there is sufficient fluid in the reservoir.
Fluid type: DOT 4+ boiling point >536 °F (280 °C), P/N 9437433.
Replace: Every second year or 30,000 miles (48,000 km). The fluid should be replaced once a year or every 15,000 miles (24,000 km) when driving under extremely hard conditions (mountain driving, etc.).

Always entrust brake fluid changing to an authorized Volvo retailer.

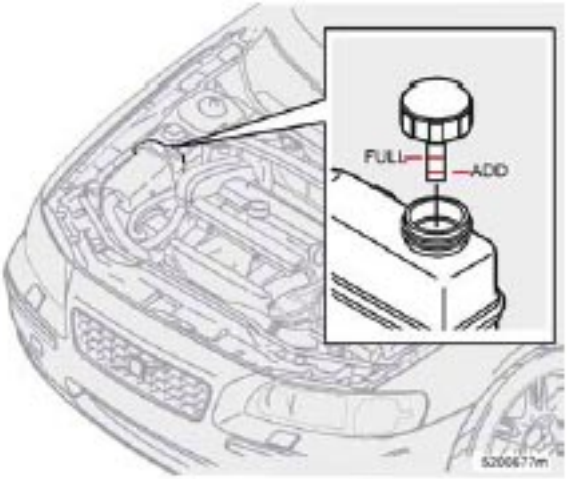

Power steering fluid reservoir
The fluid level should always be between the ADD and FULL marks.
Fluid type: Volvo synthetic power steering fluid (Pentosin CHF 11S) P/N 1161529 or equivalent.
Replace: No fluid change required.

NOTE: If a problem should occur in the power steering system or if the vehicle has no electrical current and must be towed, it is still possible to steer the vehicle. However, keep in mind that greater effort will be required to turn the steering wheel.

pg. 194 Maintenance and servicing

Wiper blades

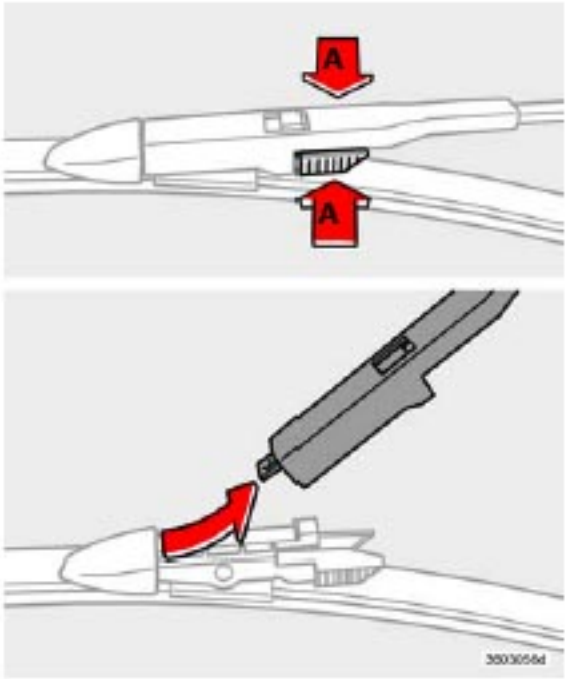

Windshield wiper blades
- Lift the wiper arm off the windshield.
- Press in the catches (A in the illustration above).
- Pull out the wiper blade.
- Insert a new wiper blade and ensure that it is firmly in place.

The driver's side wiper blade is longer than the one on the passenger's side.

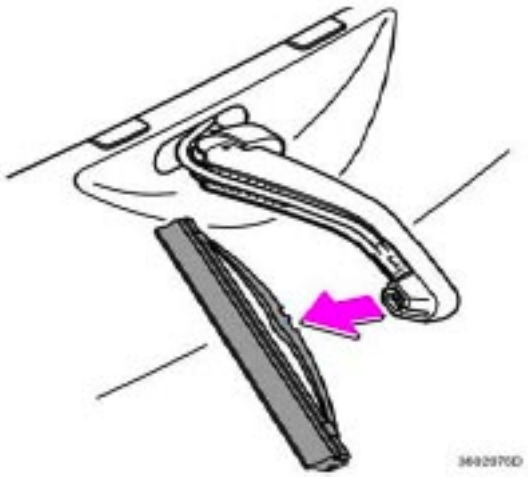

Headlight wiper blades (certain models)
Pull the wiper blade in the direction indicated by the arrow in the illustration to remove it. Press the new wiper blade into place. The long section of the blade should point toward the grille. Check that the new blade is properly attached to the wiper arm.

pg. 195 Maintenance and servicing

Battery

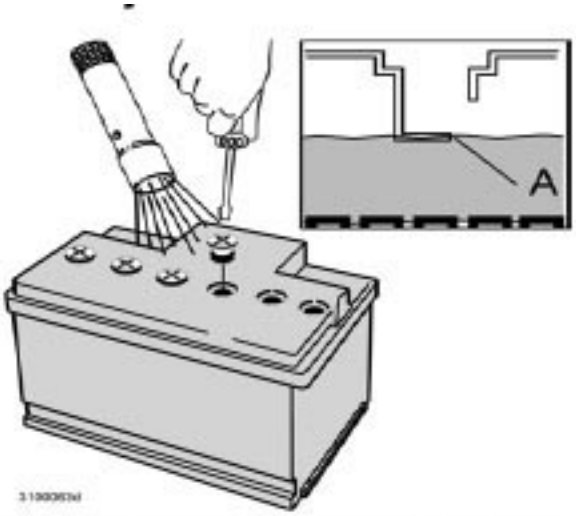

Two types of battery may be used and are fully interchangeable

Battery maintenance

The battery in your vehicle is located under the floor of the trunk.

Driving habits and conditions, climate, the number of starts, etc. all affect the service life and function of the battery. In order for your battery to perform satisfactorily, keep the following in mind:

- Check the fluid level in each cell in the battery every 24 months or every 15,000[1] miles (24,000 km), whichever is sooner. The fluid should be at the level shown in the illustrations (A)[2]. Do not overfill.

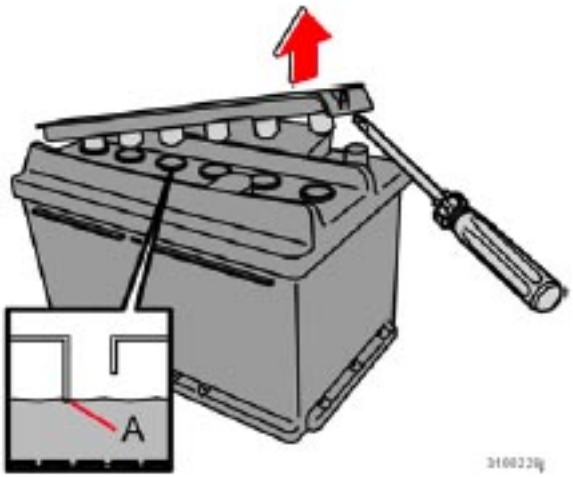

- Use a screw driver to open the caps or cover and a flashlight to inspect the level.
- If necessary, add distilled water. The level should never be above the indicator (A).
- The fluid level should be checked if the battery has been recharged.
- After inspection, be sure the cap over each battery cell or the cover is securely in place.
- Check that the battery cables are correctly connected and properly tightened. Route ventilation hose through opening in floor (see page 197)
- Never disconnect the battery when the engine is running, for example when changing the battery.
- The battery should be disconnected from the vehicle when a battery charger is used directly on the battery.
- However, if the battery is being charged via the connecting points in the engine compartment (see

page 197), the battery must be connected.

WARNING!

PROPOSITION 65 WARNING!
Battery posts, terminals, and related accessories contain lead and lead compounds, chemicals known to the state of California to cause cancer and reproductive harm. Wash hands after handling.

1. More frequently in warm climates.
2. The level indicator inside the battery could be designed in various ways. See illustrations.

pg. 196 Maintenance and servicing

Battery

WARNING!

- Never expose the battery to open flame or electric spark.
- Do not smoke near the battery.
- Battery fluid contains sulfuric acid. Do not allow battery fluid to contact eyes, skin, fabrics or painted surfaces. If contact occurs, flush the affected area immediately with water. Obtain medical help immediately if eyes are affected.

NOTE: Used batteries should be properly disposed of at a recycling station or similar facility, or taken to your Volvo retailer.

Symbols:

Wear protection goggles

See owner's manual for details

Keep away from children

Corrosive

No smoking, no open flames, no sparks

Explosion

pg. 197 Maintenance and servicing

Battery

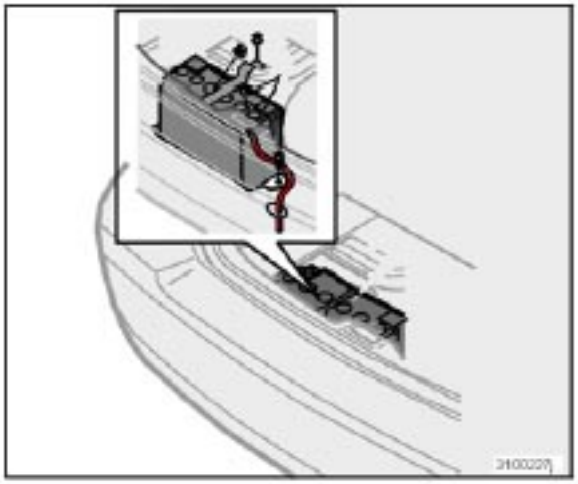

Ventilation hose

Replacing the battery
- Switch off the ignition and remove the key.
- Wait at least 5 minutes after switching off the ignition before disconnecting the battery so that all information in the vehicle's electrical system can be stored in the control modules.
- Remove the bolts on the retaining bracket over the battery and lift out the bracket.
- Fold up the plastic cover over the negative (ground) battery terminal. or unscrew the cover over the battery.
- Disconnect the negative cable.
- Lift off the plastic cover if necessary and disconnect the positive cable.
- Pull the ventilation hose from the battery.
- Lift out the old battery.

Installing a new battery
- Put a new battery into place.
- Put the lower retaining bracket in place and retighten the bolt.
- Reconnect the positive cable.
- Press the cover for the positive battery terminal into place and fold down the lid of the plastic cover.
- Connect the negative (ground) cable and fold down the plastic cover if applicable.
- Be sure that the ventilation hose is securely connected to the battery and that the other end of the hose is properly routed through the ventilation opening in the floor of the battery compartment (see the illustration).
- Reinstall the retaining bracket over the battery and retighten the nuts.

WARNING!

Ventilation hose:

- The battery generates hydrogen gas, which is flammable and explosive. The battery is fitted with a ventilation hose which vents hydrogen gas out of the battery compartment through a ventilation opening in the bottom of this compartment. If the battery must be replaced, it is essential that the ventilation hose is properly connected to the battery and that it is routed through the ventilation opening provided (see illustration).
- Be sure the ventilation hose is free of debris.
- Only use replacement batteries equipped with a ventilation hose. Consult your Volvo retailer.

NOTE: After the battery has been disconnected or replaced, lock and unlock the vehicle with the central locking system's remote control to reactivate such features as the power windows, moonroof, courtesy lighting, etc.

Replacing bulbs

When replacing bulbs, keep the following points in mind:
- Never touch the glass of bulbs with your fingers. Grease and oils from your fingers vaporize in the heat and will leave a deposit on the reflector, which will damage it.
- The optional Active Bi-Xenon headlight bulbs contain trace amounts of mercury. These bulbs should always be disposed of by an authorized Volvo retailer.
- The following bulbs should only be replaced by an authorized Volvo service technician:

- Active Bi-Xenon headlights,
- Courtesy (dome) lighting,
- Reading lights,
- Glove compartment lights
- Turn signals and courtesy lights in the side door mirrors
- High-mounted brake lights
- Diodes in the rear tail lights

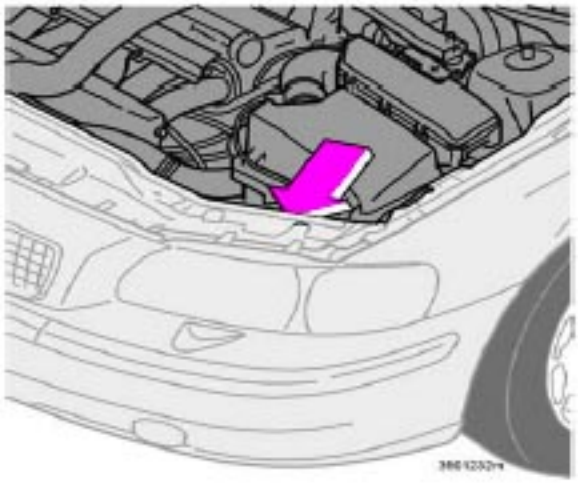

Replacing bulbs at the front of the vehicle
All front bulbs (except the optional front fog lights) are replaced from the engine compartment.

WARNING!

Active Bi-Xenon headlights (option) - due to the high voltage used by these headlights, these bulbs should only be replaced by an authorized Volvo service technician.

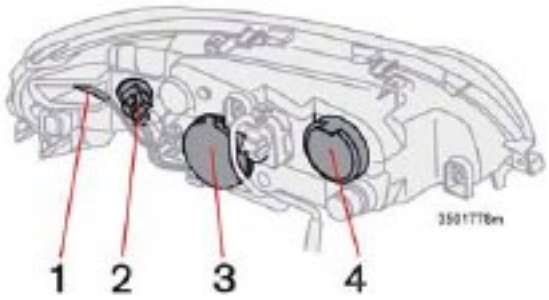

Location of the bulbs in the headlight housing
1. Side marker light
2. Turn signal
3. Low beam headlight/parking light (halogen headlights)
4. High beam headlight, parking light (Active Bi-Xenon headlights)
Certain models may have a plastic tube that may hinder access to the bulbs. This tube can be broken off and discarded.

NOTE: If you encounter difficulty when changing a bulb, please contact a Volvo workshop.

pg. 199 Maintenance and servicing

Replacing bulbs

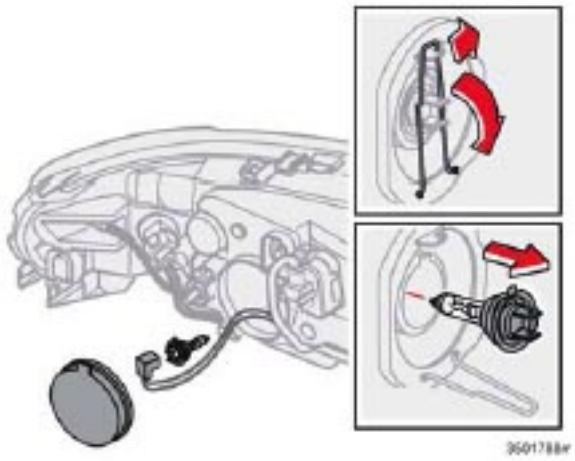

Low beam bulb

Low beam headlight
(Halogen headlights)

Removing the defective bulb:
- Switch off the headlights and turn the ignition switch to position 0.
- Remove the plastic cover.

- Disconnect the wiring connector.
- Loosen the retaining spring by first moving it to the right and then moving it outward and downward, out of the way.
- Pull out the defective bulb.

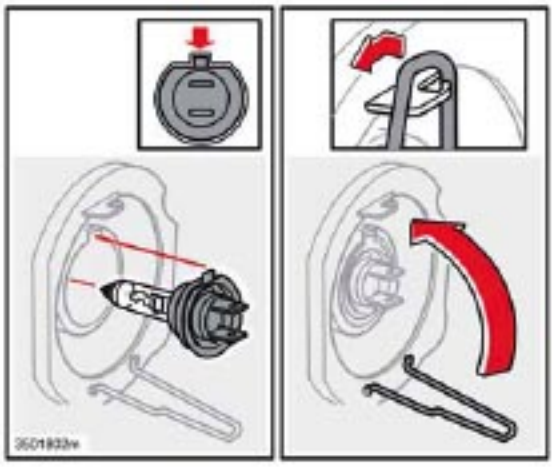

Installing the new bulb:
- Insert the new bulb, without touching the glass, with the guide lug upward. The bulb will only seat properly in this position.
- Move the retaining spring up and push it slightly to the left until it seats properly.
- Reconnect the wiring connector.
- Reinstall the plastic cover.

NOTE: If the vertical aim of your headlights needs to be adjusted for any reason (e.g., towing a trailer for extended periods), this should be done by an authorized Volvo retailer.

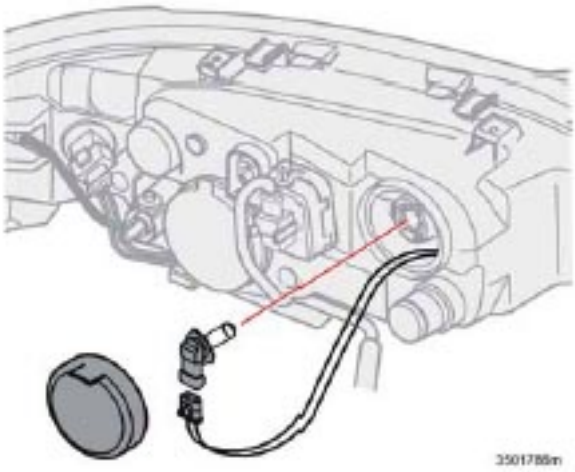

High beam bulb

High beam headlight
(Halogen headlights)

Removing the defective bulb:
- Switch off the headlights and turn the ignition switch to position 0.
- Remove the cover to access the bulb assembly.
- Turn the bulb counterclockwise and pull it out.
- Disconnect the wiring connector by pressing the lock tab out and pulling.
- Twist the bulb counterclockwise, and pull it out of the holder.

pg. 200 Maintenance and servicing

Replacing bulbs

Installing the new bulb:
- Connect the wiring connector to the new bulb until it clicks into place.
- Insert the bulb into the headlight housing and turn it until it is securely in place.
- Press the cover back into place.

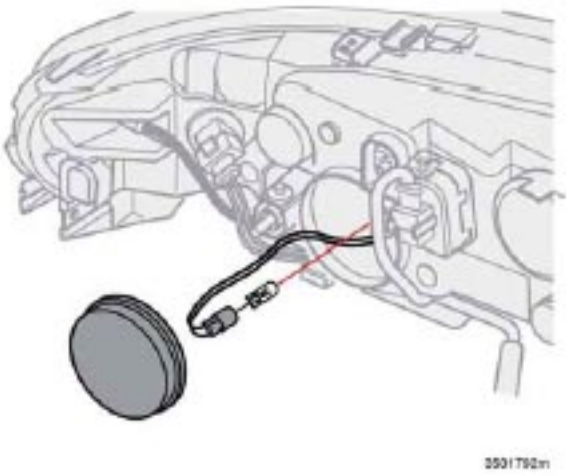

Parking light
(Halogen headlights)

Removing the defective bulb:
- Switch off the headlights and turn the ignition switch to position 0.
- Remove the plastic cover of the low beam headlight assembly. Pull out the parking light holder.
- Pull the bulb out of the holder.

Installing the new bulb:
- Press a new bulb into the holder.
- Reinsert the bulb and holder into place.
- Reinstall the plastic cover.

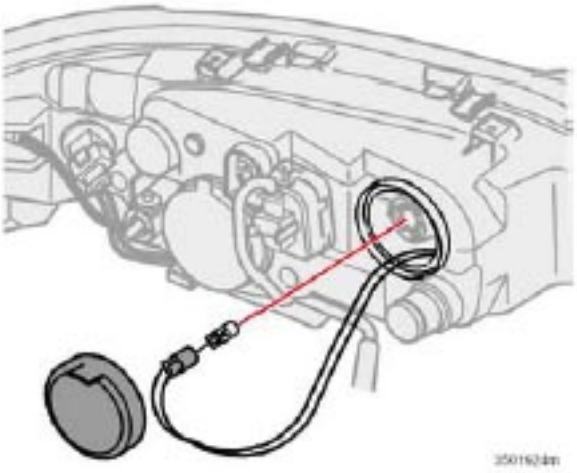

Parking light
(Active Bi-Xenon headlights)

Removing the defective bulb:
- Switch off the headlights and turn the ignition switch to position 0.
- Remove the plastic cover of the high beam headlight assembly. Pull out the parking light holder.
- Pull the bulb out of the holder.

Installing the new bulb:
- Press a new bulb into the holder.
- Reinsert the bulb and holder into place.
- Reinstall the plastic cover.

pg. 201 Maintenance and servicing

Replacing bulbs

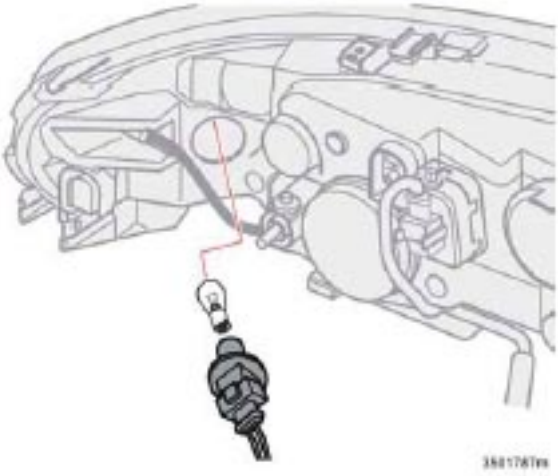

Turn signal, driver's side
Removing the defective bulb:
- Switch off the headlights and turn the ignition switch to position 0.
- Pull out the bulb holder by twisting it counterclockwise.
- Remove the bulb from the holder by pressing it in and turning it counterclockwise.

Installing the new bulb:
- Insert the new bulb into the holder by pressing it in and turning it clockwise.
- Reinsert the bulb holder in the headlight housing and twist it clockwise until it seats properly.

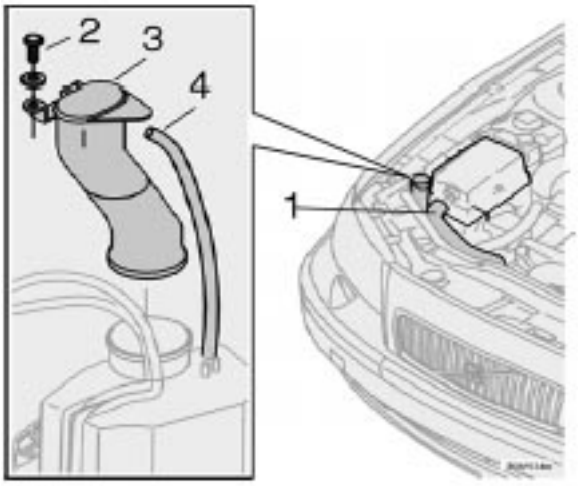

Turn signal, passenger's side
- Switch off the headlights and turn the ignition switch to position 0.
- Remove radiator pipe (1) from the box.
- Remove filler pipe screw (2).
- Pull the filler pipe (3) straight up.
- Remove vent hose (4) from filler pipe.

Installing the new bulb:
- Replace the bulb (same procedure as the driver's side bulb).
- Ensure that the seal between the washer fluid reservoir and the filler pipe is correctly positioned.
- Press the filler pipe (3) back into position.
- Press the vent hose (4) into place on the filler pipe.
- Reinstall and tighten the filler pipe screw (2).
- Reinstall the radiator pipe to the box (1).

pg. 202 Maintenance and servicing

Replacing bulbs

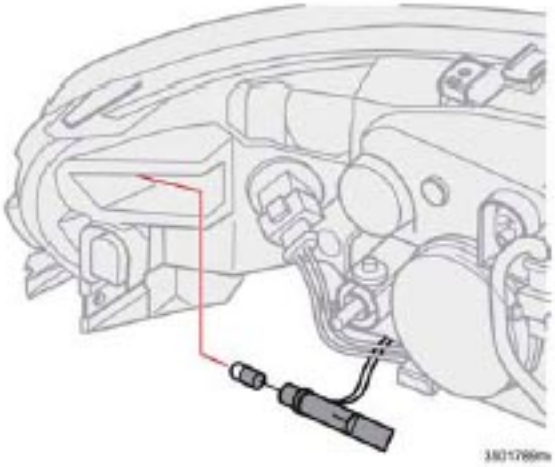

Side marker light

Side marker light
- Turn the lamp holder counterclockwise and pull it out.
- Pull out the defective bulb and insert a new one.
- Reinsert the lamp holder and turn it clockwise until it seats properly.

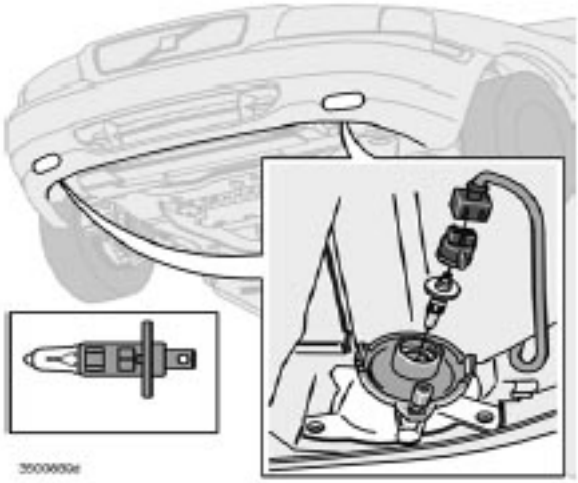

Front fog light

Front fog lights (option)
Removing the defective bulb:
- Switch off the headlights and turn the ignition switch to position 0.
- Turn the bulb holder slightly counterclockwise.
- Pull out and remove the bulb.

Installing the new bulb:
- Insert the new bulb (it can only be inserted in one position).
- Reinsert the bulb holder and turn it clockwise. "TOP" must be upward.

Replacing bulbs

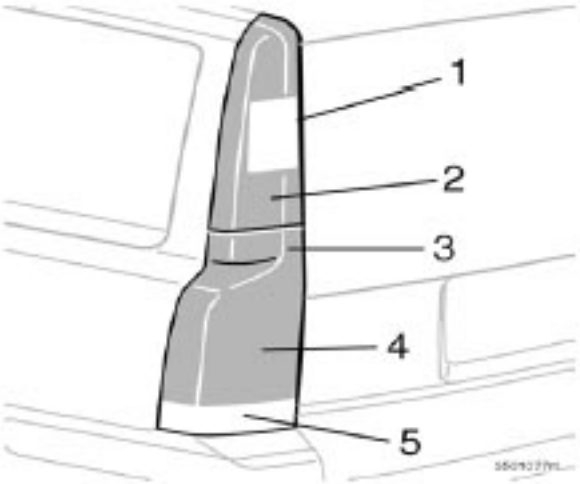

Replacing bulbs in the tail light cluster
All bulbs in the tail light cluster can be replaced from inside the cargo area.
1. Turn signal
2. Brake light
3. Parking light
4. Fog light (left side only)
5. Backup light

To replace a bulb
- Switch off all lights and turn ignition key to position 0.
- Open the access panel.
- Twist the bulb holder counterclockwise and remove it.
- Press the bulb inward, twist it counterclockwise and extract it.
- Fit a new bulb.
- Fit the bulb holder in place and twist it clockwise.
- Refit the sound insulation and put the access panel back in place.

NOTE: If the message indicating a burned out bulb remains in the information display after the bulb has been replaced, consult an authorized Volvo retailer.

Replacing turn signal and brake light bulbs
- Switch off all lights and turn the ignition switch to position 0.
- Using a screwdriver, carefully pry off the speaker grille.
- Pull out the red tab in the speaker.
- Then press on the black pin above the extracted red tab and twist out the speaker.

- Twist the bulb holder counterclockwise, and withdraw it.
- Fit a new bulb.
- Fit the bulb holder in place and twist it clockwise.

1-speaker grille, 2-bulb holder, 3-panel

- Refit the speaker and press in the red tab.
- Press the speaker grille back into position.

High level brake light
These bulbs are of a special type. We recommend that you ask your Volvo retailer to replace this bulb.

pg. 204 Maintenance and servicing

Replacing bulbs

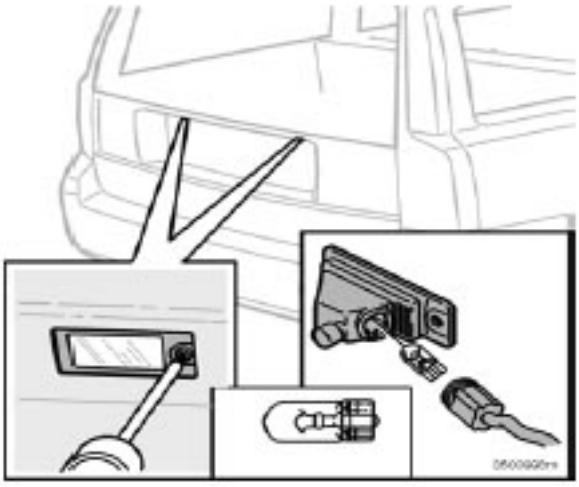

License plate lights
- Switch off the ignition.

- Loosen the screws with a torx screwdriver.
- Carefully pull out the lamp housing.
- Turn the bulb holder counterclockwise and pull it out.
- Pull out the defective bulb and insert a new one.
- Reinsert the bulb holder into the housing and turn it clockwise.
- Reinstall the housing and screw it in place.

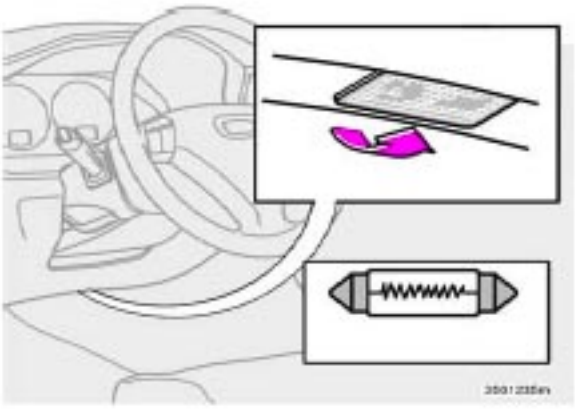

Door step courtesy lights

The door step courtesy lights are located under the dash on the driver's and passenger's sides. To replace a bulb:
- Carefully insert a screwdriver and pry out the lens.
- Replace the defective bulb.
- Reinstall the lens.

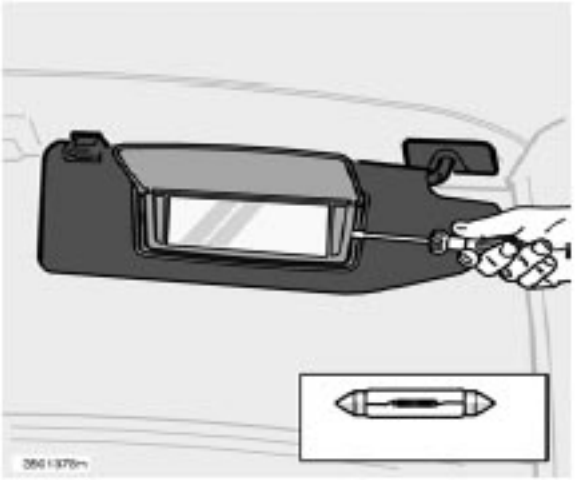

Vanity mirror

- Carefully insert a screwdriver and pry out the lens.
- Pry out the defective bulb and replace it.
- Carefully press the lower edge of the lens onto the four tabs and press the upper edge of the lens into place.

NOTE: Other bulbs may be difficult for you to replace yourself. Let an authorized Volvo retailer replace these bulbs if necessary.

pg. 205 Maintenance and servicing

Fuses

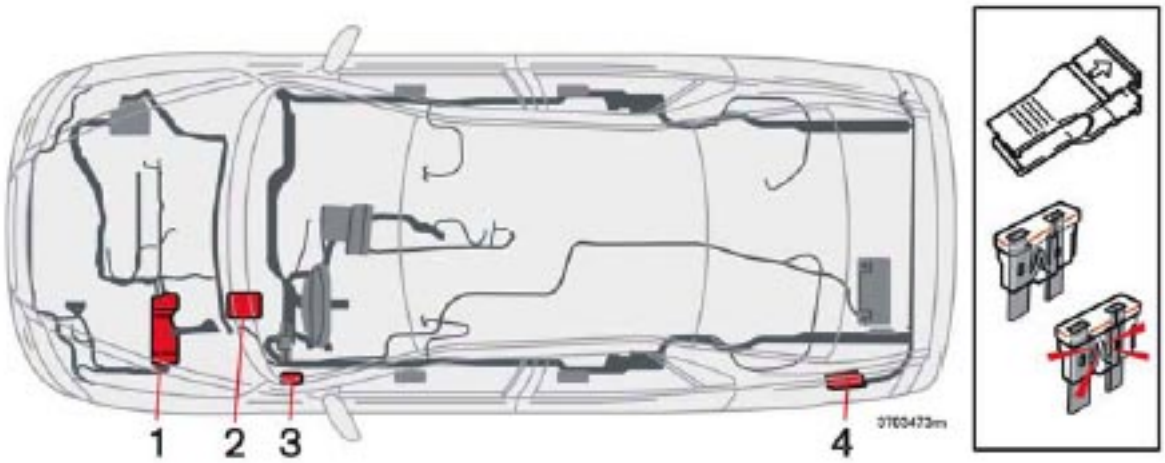

Replacing fuses
If an electrical component fails to function, it is possible that a fuse has blown.
Fuses are located in four different places:
1. Relays/fuse box in the engine compartment
2. Fuse box in the passenger compartment, behind plastic cover
3. Fuse box in the passenger compartment, on the edge of the dashboard
4. Fuse box in the cargo area
A label on the inside of each cover indicates the amperage and the electrical components that are connected to each fuse.
The easiest way to see if a fuse is blown is to remove it. Pull the fuse straight out. If a fuse is difficult to remove, you will find a special fuse removal tool (and several extra fuses) in the passenger compartment fuse box on the driver's end of dashboard. From the side, examine the curved metal wire (see next page) to see if it is broken. If so, put in a new fuse of the **same color and amperage** (written on the fuse).
Spare fuses are stored in the fuse box in the passenger compartment. If fuses burn out repeatedly, have the electrical system inspected by an authorized Volvo retailer.

WARNING!

Never use fuses with higher amperage than those stated on the following pages. Doing so could overload the vehicle's electrical system.

pg. 206 Maintenance and servicing

Fuses

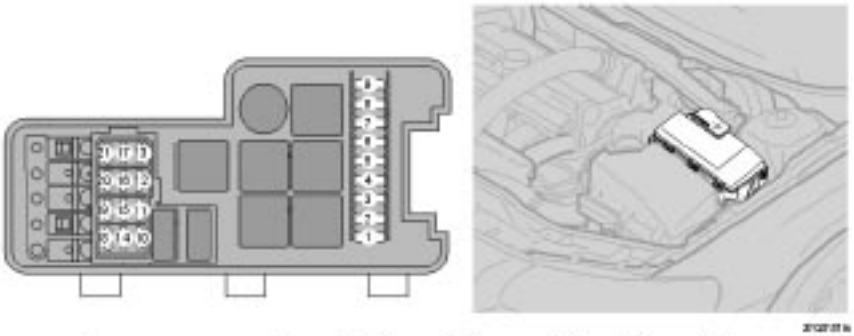

To open, press the plastic catches on the sides of the fuse box cover and lift

Relay/Fuse box in the engine compartment
When replacing fuses, be sure to replace a blown fuse with a new one of the same color and amperage (written on the fuse).

Fuses in the engine compartment

No.	Amperage
1. ABS	30
2. ABS	30
3. -	
4. -	
5. Auxiliary lights (option)	20
6. Starter motor relay	35
7. Windshield wipers	25
8. Fuel pump	15
9. Transmission control module (R-models)	15
10. Ignition coils, engine control module	20
11. Throttle pedal sensor, A/C compressor, e-box fan	10
12. Engine control module, fuel injectors, mass airflow sensor	15
13. Throttle housing control module	10

14. Heated oxygen sensor	20
15. Crankcase ventilation heater, solenoid valves	10
16. Driver's side low beam headlight	20
17. Passenger's side low beam headlight	20
18. -	
19. Engine control module feed, engine relay	5
20. Parking lights	15
21. -	

pg. 207 Maintenance and servicing

Fuses

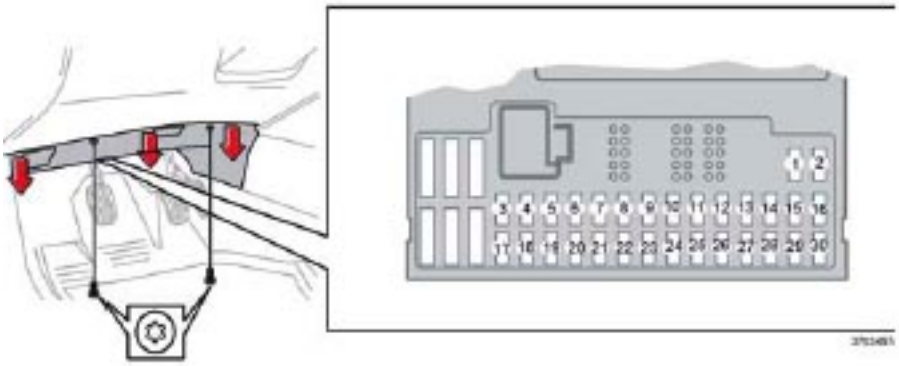

Fuse box in the passenger compartment, behind the plastic cover
This fuse box is located behind the plastic cover below the steering wheel. When replacing a blown fuse, be sure to replace it with a new one of the same color and amperage (written on the fuse).

No.	Amperage
1. Heated passenger's seat (option)	15
2. Heated driver's seat (option)	15
3. Horn	15
4. -	
5. -	
6. -	
7. -	

8. Alarm siren	5
9. Brake light switch feed	5
10. Instrument panel, climate system, power driver's seat (option), occupant weight sensor	10
11. 12-volt sockets - front and rear seats	15
12. -	
13. -	
14. Headlight wipers (V70 R)	15
15. ABS, STC/DSTC	5
16. Power steering, Active Bi-Xenon headlights (option)	10
17. Driver's side front foglight (option)	7.5
18. Passenger's side front foglight (option)	7.5
19. -	
20. -	
21. Transmission control module, reverse gear block (M66)	10
22. Driver's side high beam	10
23. Passenger's side high beam	10
24. -	
25. -	
26. -	
27. -	
28. Power passenger's seat (option), audio system	5
29. -	
30. -	
31. -	
32. -	
33. Vacuum pump	20
34. Washer pump - headlight wipers (V70 R)	15
35. -	
36. -	

pg. 208 Maintenance and servicing

Fuses

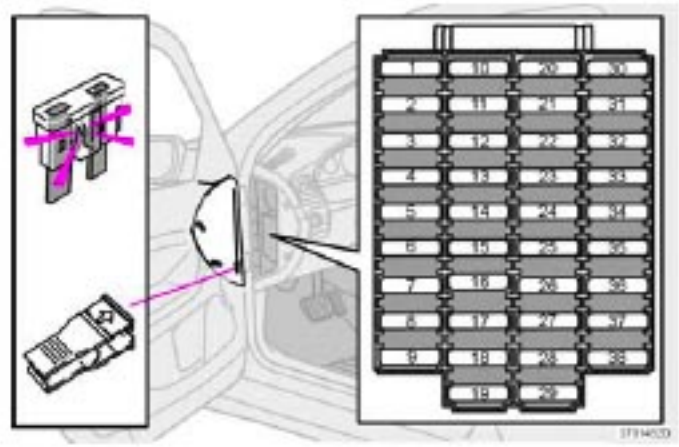

Fuse box on the edge of the dashboard
Fuses are located inside the access panel on the edge of the dashboard. There are also a number of spare fuses.

No.	Amperage
1. Power driver's seat (option)	25
2. Power passenger's seat (option)	25
3. Climate system blower	30
4. Control module - front passenger's door	25
5. Control module - driver's door	25
6. Ceiling lighting, upper electrical control module	10
7. Moon roof (option)	15
8. Ignition switch, SRS system, engine control module, immobilizer, transmission control module (R-models)	7.5
9. Onboard diagnostics, headlight switch, steering wheel angle sensor, steering wheel control module	5
10. Audio system	20
11. Audio system amplifier	30
12. Navigation system display (option)	10
13. -	
14. -	
15. -	

16. -	
17. -	
18. -	
19. -	
20. -	
21. -	
22. -	
23. -	
24. -	
25. -	
26. -	
27. -	
28. -	
29. -	
30. -	
31. -	
32. -	
33. -	
34. -	
35. -	
36. -	
37. -	
38. -	

pg. 209 Maintenance and servicing

Fuses

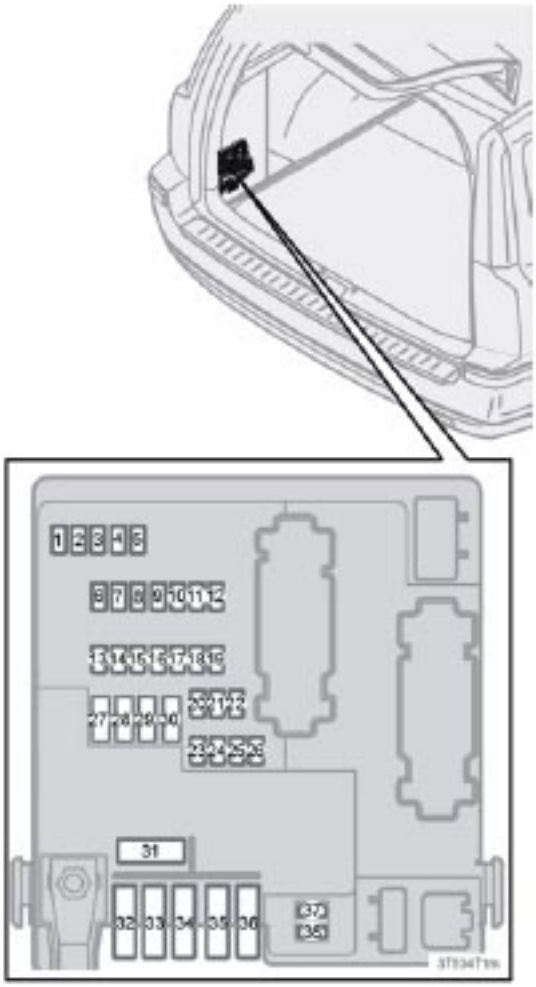

Fuses in the cargo area

The fuses in the cargo area are located behind the panel on the driver's side of the cargo compartment. When replacing a blown fuse, be sure to replace it with a new one of the same color and amperage (written on the fuse).

No.	Amperage
1. Backup lights	10
2. Parking lights, foglights, cargo area lighting, license plate lighting, brake lights	20
3. Accessory control module	15
4. -	
5. Rear Electronic Module	10
6. CD-changer (option), Navigation system (option)	7.5
7. Trailer wiring (30-feed)	15
8. 12-volt socket - cargo area	15

9. Rear passenger's side door - power window, power window cutout function	20
10. Rear driver's side door - power window, power window cutout function	20
11. -	
12. -	
13. -	
14. Subwoofer (option)	15
15. -	
16. -	
17. Accessory audio	5
18. -	
19. Tailgate wiper	15

pg. 210 Maintenance and servicing

Fuses

No.	Amperage
20. Trailer wiring (15-feed)	20
21. -	
22. -	
23. All Wheel Drive	7.5
24. Four-C chassis system (option)	15
25. -	
26. Park assist (option)	5
27. Main fuse: trailer wiring, Four-C, park assist, All Wheel Drive	30
28. Central locking system	15
29. Driver's side trailer lighting: parking lights, turn signal	25
30. Passenger's side trailer lighting: parking light, brake light, fog light, turn signal	25
31. Main fuse: fuses 37 and 38	40

32. -	
33. -	
34. -	
35. -	
36. -	
37. Heated rear window	20
38. Heated rear window	20

Contents | Top of Page

2 0 0 7
VOLVO
XC70

Specifications

pg. 211 Specifications

Label information	212
Dimensions and weights	214
Capacities	216
Engine oil	217
Fluids and cooling system	218
Three way catalytic converter	219
Suspension	220
Electrical system	221
Engine specifications	223
Volvo programs	224

All specifications are subject to change without prior notice.

pg. 212 Specifications

Label information

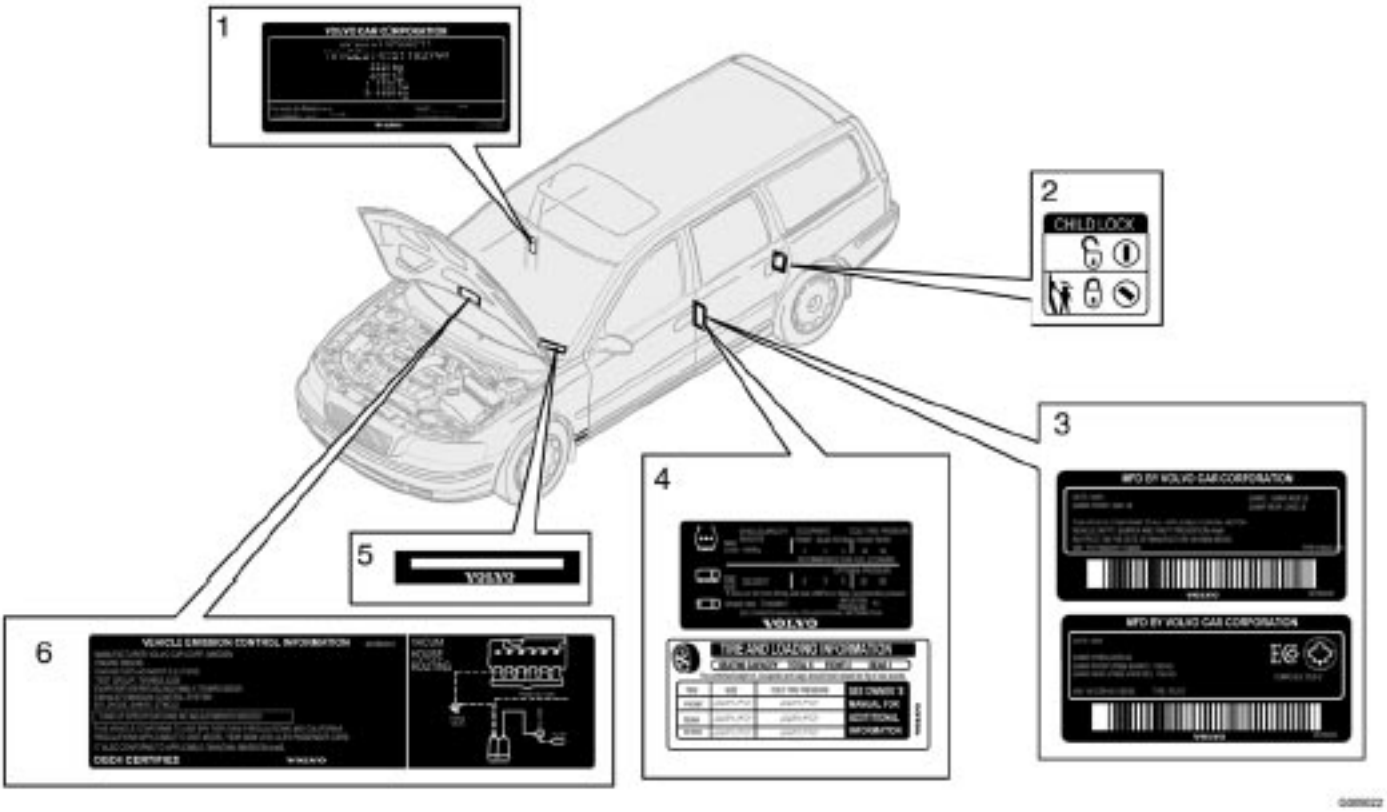

pg. 213 Specifications

Label information

1. Model plate
Vehicle Identification Number (VIN). Codes for color and upholstery, etc.
2. Child safety lock labels[1]
3. Federal Motor Vehicle Safety Standards (FMVSS) specifications (USA) and Ministry of Transport (CMVSS) standards (Canada)
Your Volvo is designed to meet all applicable safety standards, as evidenced by the certification label on the facing side of the driverÕs door. For further information regarding these regulations, please consult your Volvo retailer.
4. Loads and Tire Pressures
The appearance of the decal will vary, depending on the market for which the vehicle is intended.
- Canadian models: upper decal
- U.S. models: lower decal
5. Vehicle Identification Number (VIN)
The VIN plate is located on the top left surface of the dashboard. The VIN is also stamped on the right hand door pillar.
The Vehicle Identification Number (VIN) should always be quoted in all correspondence concerning your vehicle with the retailer and when ordering parts.
6. Vehicle Emission Control Information/ Vacuum hose routing

Your Volvo is designed to meet all applicable emission standards, as evidenced by the certification label on the underside of the hood. For further information regarding these regulations, please consult your Volvo retailer.

1. Not on vehicles equipped with the optional power child safety locks.

pg. 214 Specifications

Dimensions and weights

Dimensions

Length	185.4 in. (471 cm), XC70 -186.3 (473 cm)
Width	71 in. (180 cm), XC70 - 73.2 in. (186 cm)
Height	57.7 in. (147 cm), V70 AWD - 58.7 in. (149 cm) XC70 - 61.5 in. 156 cm) V70R - 57.6 in (146 cm)
Wheelbase	108.5 in. (276 cm), XC70 - 108.8 in. (276 cm)
Front track	61.5 in. (156 cm), XC70 - 63.4 in. (161 cm) V70R - 61.3 in. (155 cm)
Rear track	61.4 in. (156 cm), XC70 - 60.9 in. (155 cm) V70R - 60.7 in. (154 cm)
Turning circle	35.8-39 ft. (10.9-11.9 m) V70R 43.3 ft. (13.2 m)
Cargo capacity	17.1 cu. ft. (0.48 m3)[1] 26.3 cu. ft. (0.74 m3)[2] 58.0 cu. ft. (1.64 m3)[3]

1. Rear seat backrest up, load height - upper edge of backrest
2. Rear seat backrest folded down, load height - upper edge of front seat backrests/lower edge of rear window
3. Rear seat backrest folded down, load height - head lining (ceiling)

Max. loads

Max. roof load	220 lbs (100 kg)
Max. trailer weight: - **without** brakes - **with** brakes, 2" ball[1] - **with** brakes, 1 7/8" ball	 1650 lbs (750 kg) 3300 lbs (1500 kg) 2000 lbs (900 kg)
Max. tongue weight:[2]	165 lbs (75 kg)
Trailer weights below 2,650 lbs (1,200 kg)	110 lbs (50 kg)
Trailer weights above 2,650 lbs (1,200 kg)	165 lbs (75 kg)

1. When driving for prolonged periods at temperatures above 86 °F (30 °C), the maximum recommended weight is 2000 lbs (900 kg).
2. See also page 145 for additional information

WARNING!

When adding accessories, equipment, luggage and other cargo to your vehicle, the total capacity weight must not be exceeded.

pg. 215 Specifications

Dimensions and weights

Weights

Gross vehicle weight[1]	USA	Canada
V70 man.	4630 lbs	2100 kg
V70 aut.	4690 lbs	2130 kg
V70 Turbo man.	4710 lbs	2140 kg
V70 Turbo aut.	4730 lbs	2150 kg
V70 AWD[2]	4890 lbs	2220 kg
V70 AWD-R man.	4890 lbs	2220 kg
V70 AWD-R aut.	4890 lbs	2220 kg
XC70	4890 lbs	2220 kg
Capacity weight		
All models	930 lbs	420 kg
Permissible axle weights, front[1]		
V70 man.	2290 lbs	1040 kg
V70 aut.	2330 lbs	1060 kg
V70 Turbo man.	2320 lbs	1050 kg
V70 Turbo aut.	2360 lbs	1070 kg
V70 AWD	2400 lbs	1090 kg
V70 AWD-R man.	2380 lbs	1080 kg
V70 AWD-R aut.	2430 lbs	1100 kg
XC70	2490 lbs	1130 kg
Permissible axle weights, rear[1]		
V70, V70 Turbo	2470 lbs	1120 kg
V70 AWD	2580 lbs	1170 kg
V70 AWD-R	2580 lbs	1170 kg
XC70	2620 lbs	1190 kg
Curb weight		
V70	3410-3630 lbs	1555-1640 kg
V70 AWD	3710-3745 lbs	1680-1700 kg
V70 AWD-R	3810-3890 lbs	1750-1770 kg
XC70	3770-3800 lbs	1710-1725 kg

1. Permissible axle weight or gross vehicle weight must never be exceeded.
2. AWD = All Wheel Drive

pg. 216 Specifications

Capacities

Fuel tank: 18 US gal. (68 liters)

Transmission fluid

Manual (M 56)	2.2 US qts. (2.1 liters)
Manual (M 66)	2.1 US qts. (2.0 liters)
Automatic (AW 55-50)	7.6 US qts. (7.2 liters)
Automatic (TF-80SC) V70 R	7.4 US qts (7.0 liters)

Miscellaneous

Power steering	0.9 US qts. (0.9 liters)
Windshield washer reservoir	4.8 US qts. (4.5 liters)
Brake and clutch fluid	0.69 US qts. (0.65 liters)
Air conditioning system	2.2 lbs. (1 kg) R 134a
Windshield washer reservoir	6.8 US qts (6.4 liters) V70 R 4.8 US qts (4.5 liters)

Minimum octane requirement - AKI 87 (RON 91) unleaded fuel (See also page 121).

pg. 217 Specifications

Engine oil

Engine oil must meet the minimum ILSAC specification GF-3, API SL, and ACEA A1/ B1. Lower quality oils may not offer the same fuel economy, engine performance, or engine protection.

Volvo recommends Castrol.

Volume

Engine designation	Volume between MIN–MAX on dipstick	Volume[1]
B5254T4 B5254T2 B5244S	1.3 US qts (1.2 liters)	5.8 US qts. (5.5 liters)

1. Including filter replacement

pg. 218 Specifications

Fluids and cooling system

Fluids
Transmission[1]

Oil grade	
Manual:	MTF 97309
Automatic: AW5 TF-80SC (V70R)	 JWS 3309 JWS 3309

Different types of oil should never be mixed.
Power steering
Grade: Volvo synthetic power steering fluid (Pentosin CHF 11S) P/N 1161529 or equivalent.
Brake fluid
Fluid type: DOT 4+ boiling point >536 °F (280 °C).

Cooling system

Type	Positive pressure, closed system.
Coolant	Volvo original coolant/ antifreeze
Volume	9.3 US qts (8.8 liters)

The thermostat begins to open at 194 °F (90 °C).

1. The transmission oil does not normally need to be changed during the service life of the vehicle. However, it may be necessary to replace the oil if the vehicle is often driven in areas of sustained temperature extremes (hot or cold), when towing a trailer over long distances, for prolonged driving in mountainous areas, or if the vehicle is often driven short distances in temperatures under 40°F (5°C).

pg. 219 Specifications

Three way catalytic converter

Three-way catalytic converter cautions

- Keep your engine properly tuned. Certain engine malfunctions, particularly involving the electrical, fuel or distributor ignition systems, may cause unusually high three-way catalytic converter temperatures. Do not continue to operate your vehicle if you detect engine misfire, noticeable loss of

power or other unusual operating conditions, such as engine overheating or backfiring. A properly tuned engine will help avoid malfunctions that could damage the three-way catalytic converter.

- Do not park your vehicle over combustible materials, such as grass or leaves, which can come into contact with the hot exhaust system and cause such materials to ignite under certain wind and weather conditions.
- Excessive starter cranking (in excess of one minute), or an intermittently firing or flooded engine can cause three-way catalytic converter or exhaust system overheating.
- Remember that tampering or unauthorized modifications to the engine, the Electronic Control Module, or the vehicle may be illegal and can cause three-way catalytic converter or exhaust system overheating. This includes:

- Altering fuel injection setting or components.
- Altering emission system components or location or removing components.
- Repeated use of leaded fuel.

NOTE: Unleaded fuel is required for vehicles with three-way catalytic converters.

pg. 220 Specifications

Suspension

Rear suspension
Individual rear wheel suspension with longitudinal support arms, double link arms and track rods.

Front suspension
Spring strut suspension with integrated shock absorbers and control arms linked to the support frame. Power-assisted rack and pinion steering. Safety type steering column.

pg. 221 Specifications

Electrical system

Bulbs

Bulbs	Type	Socket
High beam	H9 65W	
Low beam	H11 55W	
Active Bi-Xenon headlight (option)	65W	D1S
Front foglights	H1 55	
Front foglights (V70 R)	H3 55W	
Front/rear parking lights, front side marker lights, rear footwell lighting, license plate lighting	W5W	W2.1x9.5d
Front/rear turn signals (amber)	PY21W	BAU15s
Side turn signals	WY5W	W2.1x9.5d
Brake lights, backup lights, rear foglight	P21W	BA15s
Rear parking light	P21/4W	BAZ15d
Rear parking light	R5W	BA15s
Rear side marker light	R10W	BA15s
License plate lighting	WW5	SV8.5
Front footwell lighting, cargo area lighting	C5W	SV8.5
Vanity mirror	1.2W	SV5.5

WARNING!

Active Bi-Xenon headlights (option) - due to the high voltage used by these headlights, these bulbs should only be replaced by an authorized Volvo service technician.

pg. 222 Specifications

Electrical system

12-volt system with voltage controlled generator. Single wire system in which the chassis and engine block are used as conductors, grounded on the chassis.

Battery
Voltage: 12 V
Cold start capacity (CCA): 600 A
Reserve capacity (RC): 115 min
Capacity (Ah): 70
If you must replace your battery, be sure to replace it with a battery of the same cold start capacity and

reserve capacity as the original (See the decal on the battery).

WARNING!

The distributor ignition system operates at very high voltages. Special safety precautions must be followed to prevent injury. Always turn the ignition off when:

- Replacing distributor ignition components e.g. plugs, coil, etc.
- Do not touch any part of the distributor ignition system while the engine is running. This may result in unintended movements and body injury.

pg. 223 Specifications

Engine specifications

		Engine designation		
Specification		B5244S	B5254T2	B5254T4
Output	(kW/rps)	123/100	154/83	220/92[1]
	(hp/rpm)	165/6000	208/5000	300/5500[1]
Torque	(Nm/rps)	225/75	320/25-75	400/31-95[2]
	(ft. lbs./rpm)	166/4500	236/1500-4500	295/1950-5250[2]
No. of cylinders		5	5	5
Bore (in./mm)		3.27/83	3.19/81	3.27/83
Stroke (in./mm)		3.54/90	3.67/93.2	3.67/93.2
Cylinder displacement (l)		2.4 (146.5 cu in)	2.52 (153.8 cu in)	2.52 (153.8 cu in)
Compression ratio		10.3:1	9.0:1	8.5:1

1. Automatic transmission: 220 kW at 100 rps, 300 hp at 6000 rpm.
2. Automatic transmission: 350Nm at 32-100 rps, 258 ft. lbs at 1850-6000 rpm.

Charge air cooler (Intercooler)
Turbocharged engines employ a turbo-compressor to force air into the engine inlet manifold and a charge air cooler to cool the compressed inlet air. The resulting increase in air flow raises pressure in the intake manifold and increases engine power over that developed by the normally-aspirated engine. The charge air cooler (which resembles a radiator) is located between the turbo-compressor and inlet manifold.

Fuel system
The engine is equipped with a multiport fuel injection system.

pg. 224 Specifications

Volvo programs

Volvo On Call Roadside Assistance
Your new Volvo comes with a four year ON CALL roadside assistance. Additional information, features, and benefits are described in a separate information package in your glove compartment.
If you have misplaced your package, dial:
In the U.S.A.:
1-800-638-6586 (1-800-63-VOLVO)
In Canada:
1-800-263-0475

Technician certification
In addition to Volvo factory training, Volvo supports certification by the National Institute for Automotive Service Excellence (A.S.E.). Certified technicians have demonstrated a high degree of competence in specific areas. Besides passing exams, each technician must also have worked in the field for two or more years before a certificate is issued. These professional technicians are best able to analyze vehicle problems and perform the necessary service procedures to keep your Volvo at peak operating condition.

Contents | Top of Page

2 0 0 7
VOLVO
XC70

Audio

pg. 225 Audio

Introduction	226
Audio system HU-650 - overview	226
Audio system HU-850 - overview	228
Radio functions HU-650/HU-850	229
RBDS functions HU-650/HU-850	234
HU-650 - CD player	237
HU-850 - internal CD changer	238
External CD changer (option)	239
Dolby Surround Pro Logic II - HU-850 only	240
Audio systems - specifications	242
HomeLink® Universal Transceiver (option)	243

pg. 226 Audio

Introduction

The audio system in your vehicle is operated with the buttons and knobs in the system's front panel. Certain functions, such as adjusting the volume, changing radio stations or tracks on a CD, etc, can also be controlled with the optional steering wheel-mounted keypad.
The audio system is available in two versions:
HU-650
Features: AM/FM radio, single-disc CD player, 4x25W output, four[1] speakers.
HU-850
Features: AM/FM radio, integrated 6-disc CD changer, 4x50W or 4x70W output plus 25W Dolby Pro Logic II, eleven speakers. A subwoofer mounted under the floor in the cargo area is available as an

option. Consult your Volvo retailer.

Compact disc care

- Keep the discs clean. Wipe them with a soft, clean, lint-free cloth, working from the center outwards. If necessary, dampen the cloth with a neutral soap solution. Dry thoroughly before using.
- Never use cleaning spray or antistatic liquid. Use only cleaners specifically made for CDs.
- Use discs of the correct size only (3.5" discs should never be used).
- The discs should conform to the norms EN60908 (IEC60908). CDR discs can cause listening problems due to the quality of the disc or recording equipment used.
- DualDisc: The audio side of a DualDisc (combined CD/DVD) does not meet CD specifications and may not play in your audio system.
- Do not put tape or labels on the disc itself.
- Volvo does not recommend the use of plastic outer rings on the disc.
- Condensation may occur on discs/optical components of the changer in cold winter weather. The disc can be dried with a clean, lint-free cloth. Optical components in the CD changer may, however, take up to one hour to dry off.
- Never attempt to play a disc which is damaged in any way.
- When not in use, the discs should be stored in their covers. Avoid storing discs in excessive heat, direct sunlight or dusty locations.

1. T5 and R-models: six speakers

pg. 227 Audio

Audio system HU-650 - overview

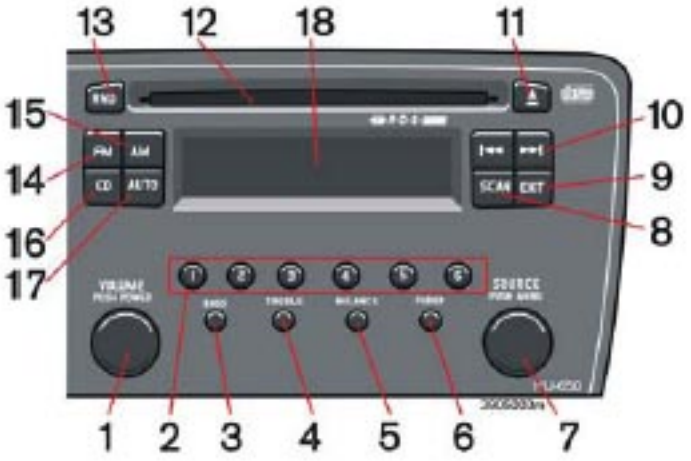

1. On/off - press
   Volume - turn
2. Buttons for selecting stored radio stations/discs in optional CD changer

3. Bass (press to release control and turn to adjust)
4. Treble (press to release control and turn to adjust)
5. Balance (left/right) - press to release control and turn to adjust
6. Fader (front/rear) - press to release control and turn to adjust
7. Source/Menu
Press to open main menu
Turn to select FM, AM, CD, CD changer (option)
8. Scan function (automatically search for radio stations)
9. Exit (exit the menu)
10. Navigation buttons (seek/change radio station or CD track)
11. CD eject
12. CD slot
13. CD random play
14. FM (select FM1, FM2, FM3)
15. AM (select AM1 or AM2)
16. CD player
17. AUTO - automatically search for radio stations
18. Display

pg. 228 Audio

Audio system HU-850 - overview

1. On/off - press
   Volume - turn
2. Buttons for selecting stored radio stations/discs in optional CD changer
3. Bass (press to release control and turn to adjust)
4. Treble (press to release control and turn to adjust)
5. Balance (left/right) - press to release control and turn to adjust
6. Fader (front/rear) - press to release control and turn to adjust

7. Source/Menu
Press to open main menu
Turn to select FM, AM, CD, CD changer (option)
8. Scan function (automatically search for radio stations)
9. Exit (exit the menu)
10. Navigation buttons (seek/change radio station or CD track)
11. CD eject
12. Dolby Surround Pro Logic II
13. 2-channel stereo
14. 3-channel stereo
15. CD slot
16. CD random play
17. FM (select FM1, FM2, FM3)
18. AM (select AM1 or AM2)
19. CD player
20. AUTO - automatically search for radio stations
21. Display

pg. 229 Audio

Radio functions HU-650/HU-850

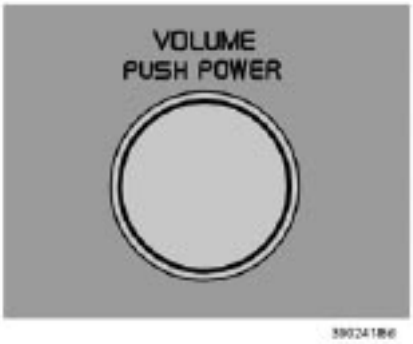

Switch on/off
Press the knob to switch on or turn off the radio.

Volume control
Turn the knob clockwise to increase volume. Volume control is electronic and does not have an end stop. If you have a key pad in the steering wheel, increase or decrease the volume with the + or - buttons.

Volume control - ALARM
If a CD is playing when the radio receives an alarm bulletin (available in certain areas only), the CD player enters pause mode. The bulletin is broadcast at the volume selected for this type of message.

After the bulletin has been completed, the audio system reverts to the originally selected sound.

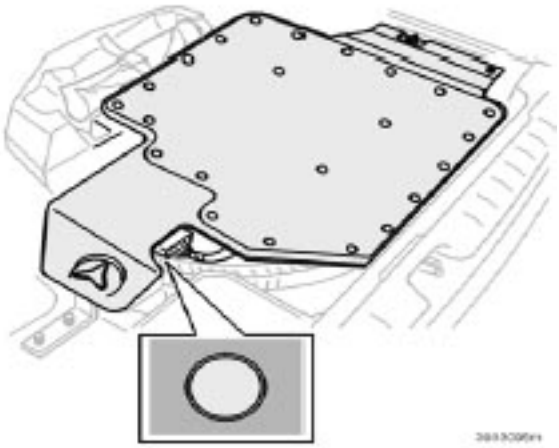

Volume control - Subwoofer (option)
Turn the knob clockwise to increase volume. Turn the knob counterclockwise to lower volume or switch off the subwoofer. When the knob is in the middle, bass effect is "equalized".

pg. 230 Audio

Radio functions HU-650/HU-850

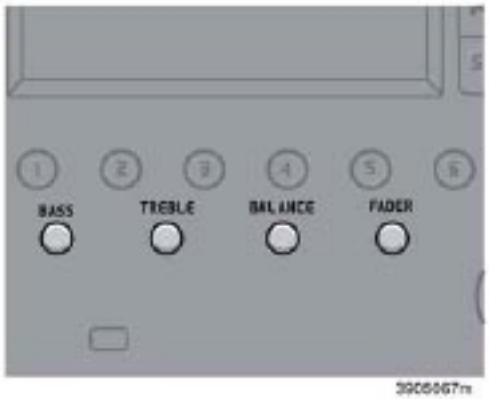

Sound settings
Bass
Adjust the bass by pressing the button to extend the control and turning it to the left (less bass) or to the right (more bass). A "detent" indicates "equalized" bass. Press the button back in when you have made the adjustment.

Treble
Adjust the treble by pressing the button to extend the control and turning it to the left (less treble), or to

the right (more treble). A "detent" indicates "equalized" treble. Press the button back in when you have made the adjustment.

Fader - Balance front/rear
Adjust front/rear speaker balance by pressing the button to extend the control and turning it to the left (more sound from the rear speakers) or to the right (more sound from the front speakers). A "detent" indicates "equalized" balance. Press the button back in when you have made the adjustment.

Balance right/left
Adjust left/right speaker balance by pressing the button to extend the control, and turning it to the left (more sound from the left speakers) or to the right (more sound from the right speakers). A "detent" indicates "equalized" balance. Press the button back in when you have made the adjustment.

MID EQ level
This function is used to fine-tune the balance of sound in the speakers. To set the level:
- Press SOURCE.
- Turn the SOURCE knob, select ADVANCED MENU and press SOURCE.
- Turn the SOURCE knob, select AUDIO SETTINGS and press SOURCE.
- Turn the SOURCE knob, select MID EQ LEVEL and press SOURCE.
- Turn the SOURCE knob, select the desired level and press SOURCE.
- Press EXIT.

pg. 231 Audio

Radio functions HU-650/HU-850

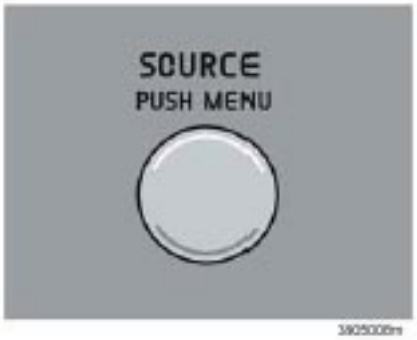

Selecting a sound source
The sound source (e.g. AM, FM, etc.) can be selected in two ways:
- Use the sound source buttons (see the center illustration above).
- Turn the SOURCE knob (see illustration above) to select a sound source (AM1, AM2, FM1, FM2, FM3, or CD). Press the knob to select the AM or FM band of your choice.

The sound source selected will be shown in the display.

Scan
Press the SCAN button to start the station scan function. When a station is found, scanning stops for approximately 10 seconds, after which scanning will continue.
Press the SCAN or SOURCE button when a station has been found if you would like to listen to that station and to discontinue the scan function.

Station seek up/down
Press |◄◄ or ►►| to start the seek function. The radio seeks the next audible station and tunes it in. Repeat the procedure to continue the seek function.

Manual station search
Press |◄◄ or ►►| and hold it down. MAN will be shown in the display. The radio scans slowly in the selected direction and will increase the scanning speed after a few seconds. Release the button when the desired frequency appears in the display. The frequency can be fine-tuned by short presses on the |◄◄ or ►►| keys. The system will remain in manual search mode for 5 seconds after the button is released, after which it will return to seek mode.

pg. 232 Audio

Radio functions HU-650/HU-850

Steering wheel key pad (option)
If the vehicle is equipped with the key pad in the steering wheel press the right or left arrow to switch between preset stations.

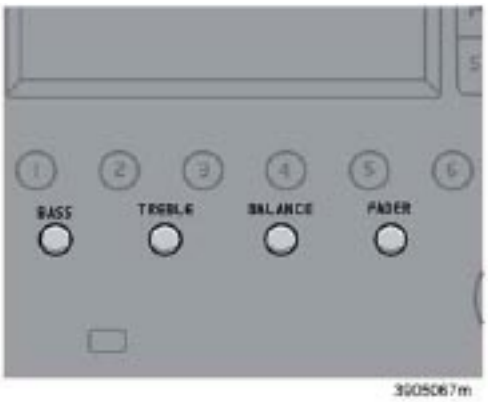

Storing stations
To store a selected station under one of the station setting buttons 1-6:
- Tune to the desired station.
- Press the button under which the station is to be stored and keep it depressed. The audio system sound will be interrupted for a few seconds and STORED will appear in the display. The station is now stored.

A total of 30 stations can be stored; 6 stations each in AM1, AM2, FM1, FM2, and FM3.

Storing stations automatically
This function automatically searches for and stores up to 10 strong AM or FM stations in a separate memory. If more than ten stations are found, the ten strongest ones are stored. This function is especially useful in areas in which you are not familiar with radio stations or their frequencies.
To use the AUTO function:
- Select radio mode using the AM or FM buttons, or by turning the SOURCE knob.
- Start the search by pressing AUTO for more than 2 seconds.
- AUTO appears in the display and a number of stations with strong signals

pg. 233 Audio

Radio functions HU-650/HU-850

(max. 10) from the selected frequency band will be stored in the auto-store memory. If there are no stations with sufficient signal strength, NO STATION is displayed.
- Press the AUTO button or the arrow keys on the optional steering wheel controls briefly to select the stored stations.

When the radio is in auto-store mode, AUTO is shown in the display. AUTO disappears when you return to the normal radio mode.
Return to the normal radio mode by pressing the AM, FM, or EXIT button.
To return to the Auto-store mode, press the AUTO button briefly.

pg. 234 Audio

RBDS functions HU-650/HU-850

Radio Broadcast Data System - RBDS
This feature, which may not be available in your area, functions only with FM broadcasts. The radio in your vehicle is equipped with an advanced system allowing information from broadcasters to be transmitted visually, as text, together with the audio signal. This information is then decoded by the radio and made available for several new and unique features.
The RBDS or Radio Broadcast Data System operates in the FM band only, and the information transmitted is supplied exclusively by participating broadcasters. Volvo has no control over the accuracy of the data or information.
Coverage by local broadcasters may be limited at this time, but as the technology and benefits grow, you will find the radio in your vehicle is equipped to take advantage of this system.

PI (Program Information) Seek:
When an FM station has been stored as a preset, the radio also stores RBDS program information if it is

available. When the preset is selected at a later time, the radio tries to access updated program information. In weak signal areas, there may be a delay before the station becomes audible. During this delay, "PI seek" will be displayed and there will be no sound.
PI seek can be interrupted by pressing EXIT.

Radio text
Certain RBDS stations broadcast program information, which can be shown in the display. The text will be shown twice in the display.
To start this function:
Press the FM button for several seconds.
To deactivate this function:
Press FM briefly. Station information will be shown twice in the display.

Alarm
Alarms bulletins are transmitted automatically by certain RBDS stations. The function cannot be deactivated.
"Alarm!" is shown in the radio display when an alarm message is sent. The function is used to warn motorists of serious accidents, etc.

pg. 235 Audio

RBDS functions HU-650/HU-850

Program type/station format - PTY
The PTY function allows you to find stations whose programs suit your taste. Use the PTY function to select among the different station formats shown in the list.
To select a station format:
- Select radio mode using the FM button, or by turning the SOURCE knob.
- Turn the SOURCE knob, select PTY and press SOURCE.
- Turn the SOURCE knob, select a station format from the list and press SOURCE to confirm the selected station format. The PTY (station format) of the selected station is now shown in the display.

NOTE: Not all RBDS radio stations have PTY designations.

Station formats

Format	Display text
Off	PTY OFF
News	NEWS
Current affairs	AFFAIRS

Information	INFO
Sports	SPORT
Education	EDUCATION
Drama	DRAMA
Art and culture	CULTURE
Science	SCIENCE
Entertainment	VARIED
Pop music	POP M
Rock music	ROCK M
Easy listening	EASY M
Light classics	LIGHT M
Classical music	CLASSICS
Other music	OTHER M
Weather	WEATHER
Finance	FINANCE
Religious programs	RELIGION
Travel	TRAVEL
Leisure	LEISURE
Jazz music	JAZZ
Country music	COUNTRY
National music	NATION M
Oldies	"OLDIES"
Folk music	FOLK M
Documentary	DOCUMENT

pg. 236 Audio

RBDS functions HU-650/HU-850

Automatic Frequency update (AF)
The AF function tunes to the strongest transmitter for the current station, if that station supports alternative frequencies. AF is OFF by default.
To deactivate AF:
- Select radio mode using the FM button, or by turning the SOURCE knob.
- Press SOURCE.

- Turn the SOURCE knob, select ADVANCED MENU and press SOURCE.
- Turn the SOURCE knob, select RADIO SETTINGS and press SOURCE.
- Turn the SOURCE knob, select AF ON/ OFF (flashing text) and press SOURCE.
- Press EXIT.

To reactivate the function, follow the procedure above and select AF ON in step 5.

Resetting RBDS functions

RBDS functions can be returned to their factory settings as follows:
- Select radio mode using the FM button, or by turning the SOURCE knob.
- Press SOURCE.
- Turn the SOURCE knob, select ADVANCED MENU and press SOURCE.
- Turn the SOURCE knob, select RESET TO DEFAULT and press SOURCE.
- Press EXIT.

ASC - speed compensated volume

The audio system's volume is adjusted automatically according to the speed of the vehicle. There are three settings available: low, medium, or high.

To activate ASC:
- Select radio mode using the FM button, or by turning the SOURCE knob.
- Press SOURCE.
- Turn the SOURCE knob, select ADVANCED MENU and press SOURCE.
- Turn the SOURCE knob, select AUDIO SETTINGS and press SOURCE.
- Turn the SOURCE knob, select ASC LEVEL (flashing text) and press SOURCE.
- Turn the SOURCE knob to select LOW, MEDIUM, HIGH, or OFF and press SOURCE.
- Press EXIT.

NOTE: Please be aware that there are certain RBDS menu selections, for example EON, TP search, News, etc, that may not be available in North America.

pg. 237 Audio

HU-650 - CD player

Starting the CD player

Please refer to the illustration on page 227 for the location of the buttons referred to on this page.
- Insert a disc into the player.
- Press the CD button or turn the SOURCE knob to CD.

Changing tracks

Briefly press the |◄◄ or ►►| keys (or the corresponding keys on the optional steering wheel keypad) to skip to the previous or next track. The track number is shown in the display.

Fast forward/back
Press and hold down the |◄◄ or ►►| keys to search within a track or the entire disc. The search continues for as long as the buttons are held in.

NOTE: The corresponding keys on the optional steering wheel keypad cannot be used for fast forward/ back.

Random play
This function plays the tracks on a CD in random order (shuffle).
- Select CD mode and press the RND button. RND is shown in the display as long as the function is activated.
- Press RND again to stop random play.

Scan
This function plays the first 10 seconds of each track on the CD.
- Press SCAN to start the function.
- Press SCAN again or EXIT to stop the scan function and listen to an entire track.

CD eject
Press the button (no. 11 in the illustration on page 227) to eject the disc.

NOTE:
- For reasons of traffic safety, the ejected CD must be removed within 12 seconds or it will be automatically drawn back into the slot and the CD player will resume playing the most recently selected track.
- See page 226 for information on caring for compact discs.

pg. 238 Audio

HU-850 - internal CD changer

Starting the CD changer
The HU-850 is equipped with an internal, 6-disc CD changer.
Please refer to the illustration on page 228 for the location of the buttons referred to on this page.

To load discs into the changer:
- Press the CD button or turn the SOURCE knob to CD.
- Select an empty position by pressing one of the preset buttons. The display shows which positions are empty. LOAD DISC must be displayed before a disc is inserted into the player.

- Insert a disc.

If there are discs in the player when CD mode is selected, the changer will resume playing the disc and track that were most recently played.

Selecting a disc position (number)
Use the station setting buttons 1-6 to select the disc to be played. The number of the disc and the track being played are shown in the display.

Changing tracks
Briefly press the |◄◄ or ►►| keys (or the corresponding keys on the optional steering wheel keypad) to skip to the previous or next track. The track number is shown in the display.

Fast forward/back
Press and hold down the |◄◄ or ►►| keys to search within a track or the entire disc. The search continues for as long as the buttons are held in.
The corresponding keys on the optional steering wheel keypad cannot be used for fast forward/back.

Random play
This function plays the tracks on a CD in random order (shuffle).
- Select CD mode and press the RND button. RND is shown in the display as long as the function is activated. Random tracks from randomly selected discs will be played.
- Press RND again to stop random play.

Scan
This function plays the first 10 seconds of each track on the CD.
- Press SCAN to start the function.
- Press SCAN again or EXIT to stop the scan function and listen to an entire track.

Scan only works on the selected disc.

CD eject
This function makes it possible to eject a single disc, or to eject all of the discs in the changer.
- Press the eject button briefly to eject the disc that is currently playing.
- A longer press (more than two seconds) starts the process of ejecting all of the discs in the changer.

NOTE:
- The EJECT ALL function can only be used while the vehicle is at a standstill and will be cancelled if the vehicle begins to move.
- For reasons of traffic safety, you have 12 seconds in which to remove the ejected disc. After that, the disc automatically reinserts into the player, and the CD player will resume playing the most recently

selected track.

- See page 226 for information on caring for compact discs.

pg. 239 Audio

External CD changer (option)

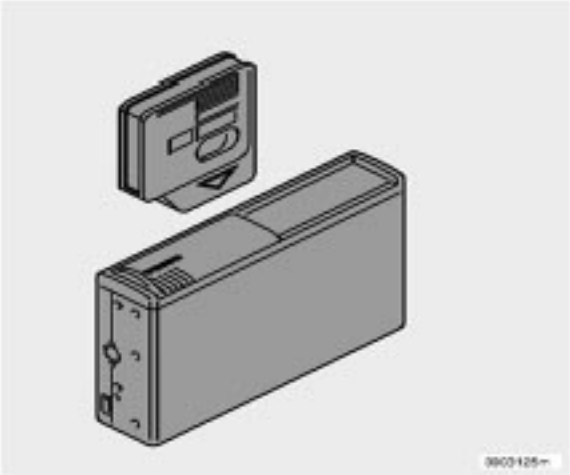

External CD changer

The optional 10-CD changer is mounted in the cargo compartment. Please refer to the illustration on page 226 for the location of the buttons referred to on this page.

Turn the SOURCE knob to select the external CD changer.

To load discs into the changer:

- Slide the cover on the CD change open.
- Press the eject button on the CD changer.
- Pull the magazine out of the changer and insert the disc(s).
- Press the magazine back into the changer and slide the cover back into place.

If there are discs in the player when CD mode is selected, the changer will resume playing the disc and track that were most recently played.

Selecting a disc position (number)

Use the station setting buttons 1-6 to select the disc to be played. Continue to press button 6 to select discs 7-10.

The number of the disc and the track being played are shown in the display.

Changing tracks

Briefly press the |◄◄ or ►►| keys (or the corresponding keys on the optional steering wheel keypad) to skip to the previous or next track. The track number is shown in the display.

Fast forward/back
Press and hold down the ⏮ or ⏭ keys to search within a track or the entire disc. The search continues for as long as the buttons are held in.
The corresponding keys on the optional steering wheel keypad cannot be used for fast forward/back.

Random play
This function plays the tracks on a CD in random order (shuffle).
- Select CD mode and press the RND button. RND is shown in the display as long as the function is activated. Random tracks from randomly selected discs will be played.
- Press RND again to stop random play.

Scan
This function plays the first 10 seconds of each track on the CD.
- Press SCAN to start the function.
- Press SCAN or EXIT to stop the scan function and listen to an entire track.

Scan only works on the selected disc.

pg. 240 Audio

Dolby Surround Pro Logic II - HU-850 only

Dolby Surround Pro Logic II
Dolby Surround Pro Logic II is a further development of the previous version of the system and provides enhanced sound quality. The improved sound is particularly apparent to passengers in the rear seat.

NOTE: Dolby Surround Pro Logic II, together with a center speaker in the dashboard, offers you a sound experience very close to a live performance. The normal left-right stereo channels are divided to left-center-right. In addition, surround sound is produced by the rear speakers. This surround sound mirrors the ambience of a concert hall.

NOTE:
- Dolby Surround Pro Logic II is optimized for CD mode.
- When listening to FM radio stations, Dolby Surround Pro Logic II functions best in areas with strong reception. If reception is weak, selecting 2 or 3-channel stereo may provide better sound quality.
- 3 channel stereo is recommended for AM and FM broadcasts.

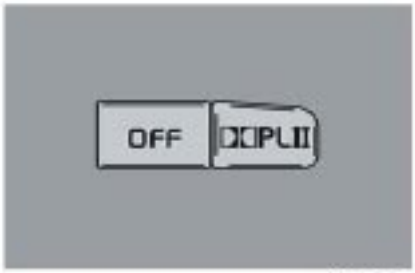

Dolby Surround Pro Logic II and the Dolby icon are trademarks of Dolby Laboratories Licensing Corporation. Dolby Pro Logic II Surround System is manufactured under license from Dolby Laboratories Licensing Corporation.

Selecting Dolby Surround Pro Logic II
To select Dolby Surround Pro Logic II mode during CD playback, press "PL II". "Dolby Pro Logic II" is displayed. Press "OFF" to return to 2 channel stereo.

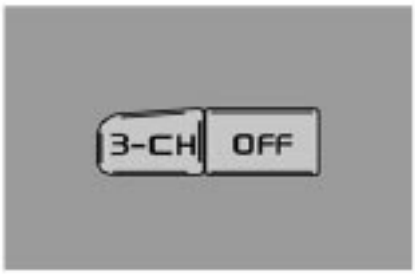

3 Channel stereo
To select 3 channel stereo mode press "3-CH". "3 ch" is displayed. Press "OFF" to return to 2 channel stereo.

pg. 241 Audio

Dolby Surround Pro Logic II - HU-850 only

Center level
This function is used to set the level of the center speaker in the dashboard. To set the level:
- Press SOURCE.
- Turn the SOURCE knob, select ADVANCED MENU and press SOURCE.
- Turn the SOURCE knob, select AUDIO SETTINGS and press SOURCE.
- Turn the SOURCE knob, select CENTER LEVEL and press SOURCE.
- Turn the SOURCE knob, select the desired level and press SOURCE.
- Press EXIT.

Surround level
This function is used to set the level of the of the rear speakers. To set the level:
- Press SOURCE.
- Turn the SOURCE knob, select ADVANCED MENU and press SOURCE.
- Turn the SOURCE knob, select AUDIO SETTINGS and press SOURCE.
- Turn the SOURCE knob, select SURROUND LEVEL and press SOURCE.
- Turn the SOURCE knob, select the desired level and press SOURCE.
- Press EXIT.

pg. 242 Audio

Audio systems - specifications

HU-650	
Output:	4x25 W
Impedance:	4 Ohm
Voltage required:	12 V, negative ground
External amplifier:	4x50 W or 4x75 W
Radio frequency range:	
AM:	530 - 1710 kHz
FM:	87.7 - 107.9 MHz
HU-850	
Output	1x25 W center speaker
Impedance:	4 Ohm
Voltage required:	12 V, negative ground
External amplifier[1]:	4x50 W or 4x75 W
Radio frequency range	
AM:	530 - 1710 kHz
FM:	87.7 - 107.9 MHz

1. The HU-850 must be connected to an external amplifier.

Alarm

"Alarm!" is displayed when an alarm message is sent. The function is used to warn the driver of a serious accident or disaster situation.

CAUTION!

The optional supplementary amplifier (HU-850) may be mounted under the front passenger's seat. If the floor of the vehicle has become soaked for any reason, do not turn on the radio. This would cause damage to the amplifier. Contact a Volvo retailer.

Low battery voltage
If the level of battery voltage is low, a message will be displayed. The vehicle's energy conservation function may switch off the audio system. Recharge the battery by starting the engine.

pg. 243 Audio

HomeLink® Universal Transceiver (option)

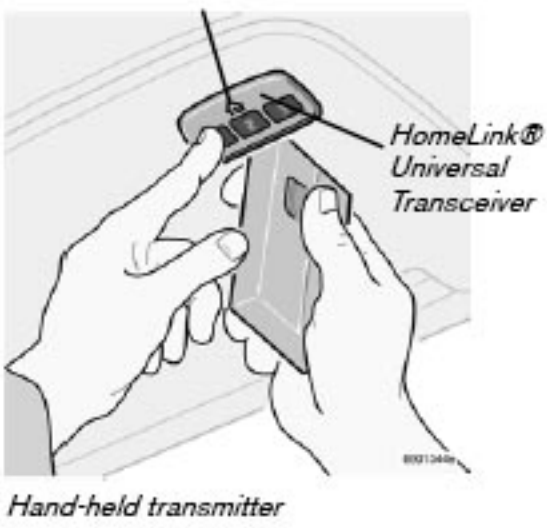

HomeLink® Universal Transceiver
HomeLink® is an advanced system that can be programmed to learn the codes of three different remote controlled-devices (e.g., garage door openers, remote lighting, entry door lock). HomeLink®'s sun visor-mounted transceiver, powered by your vehicle's electrical system, may then be used in place of your hand-held remote controls.

NOTE: For your security, the HomeLink® Universal Transceiver is designed to not function if you lock your vehicle from the outside.

Programming the transceiver
- The ignition switch must be turned to the "accessory" position (II) before programming the HomeLink® Universal Transceiver.

- Begin by erasing all 3 factory default channels. Hold down the two outside buttons (buttons 1 and 3 in the illustration) on the HomeLink® Universal Transceiver for about 20 seconds, until HomeLink®'s indicator light begins to flash. Then release the buttons.
- Hold your hand-held transmitter (garage door opener, for example) 2 to 5 in. (5 to 12 cm) away from the HomeLink® surface, keeping the indicator light in view. For placement questions, contact HomeLink® toll-free 1-800-355-3515 (Internet: www.HomeLink.com).
- Using two hands, push and hold both your hand-held transmitter's button and the transceiver button you wish to program.
The indicator light will flash first slowly, then rapidly. Rapid flashing tells you the HomeLink® button has been successfully programmed. Release both buttons.
- If you are programming a rolling code-equipped device (e.g., garage door opener or entry door lock), refer to "Programming rolling codes" on the next page to complete the programming process.

Repeat the third and fourth steps to program the other two transceiver buttons.
If, after several attempts, you are unable to successfully train the HomeLink® Universal Transceiver to learn your hand-held transmitter's signal, contact HomeLink® toll-free 1-800-355-3515 (Internet: www.HomeLink.com).

pg. 244 Audio

HomeLink® Universal Transceiver (option)

WARNING!

If you use HomeLink® to open a garage door or gate, be sure no one is near the gate or door while it is in motion.

Do not use the HomeLink® Universal Transceiver with any garage door opener that lacks safety "stop" and "reverse" features as required by federal safety standards. (This includes any garage door opener model manufactured before April 1, 1982) A garage door opener that cannot "detect" an object, signalling the door to "stop" and "reverse" does not meet current federal safety standards. Using a garage door opener without these features increases the risk of serious injury or death. For more information on this matter, call toll-free 1-800-355-3515 (Internet: www.HomeLink.com).

NOTE: Canadian residents: During programming, your hand-held transmitter may automatically stop transmitting. To successfully train HomeLink®, continue to hold the HomeLink® button. At the same time, repeatedly press and hold your handheld transmitter's button at two-second intervals until HomeLink® has learned your transmitter's code. The HomeLink® indicator light will flash first slowly, and then rapidly to indicate that the button has been successfully programmed.

Determining if your garage door uses a rolling code
Determine, in one of the following ways, if your garage door uses a rolling code system and is manufactured after 1996:
- Refer to the garage door opener owner's manual for verification.
- If your hand-held transmitter appears to program the HomeLink® Universal Transceiver but the programmed button does not activate the garage door, your garage door opener may have a rolling code.
- Press the programmed HomeLink® button. If the garage door opener has the rolling code feature, the HomeLink® indicator light flashes rapidly and then glows steadily after approximately 2 seconds.

To train a rolling code garage door opener, follow these instructions after programming the desired transceiver button according to "Programming the transceiver." The help of a second person may make training easier.
- Locate the training button on the garage door opener motor head unit. The location and color of the training button may vary. If you encounter difficulty, refer to the garage door opener owner's manual or call toll-free 1-800-355-3515 (Internet: www.HomeLink.com).
- Press the "training" button on the garage door opener motor head unit until the "training" light comes on.
- Press and release the programmed HomeLink® button. Press and release the programmed HomeLink® button a second time to complete the training process.
Some garage door openers may require you to do this procedure a third time to complete the training.

The programmed button on your HomeLink® Universal Transceiver should now operate your garage door opener. The original handheld transmitter can also be used, as desired, to operate the garage door. The remaining two HomeLink® buttons can be programmed in the same way. In the event of any problems in programming the HomeLink® Universal Transceiver, call toll-free 1-800-355-3515 (Internet: www.HomeLink.com).

pg. 245 Audio

HomeLink® Universal Transceiver (option)

Operating the HomeLink® Universal Transceiver
Once programmed, the HomeLink® Universal Transceiver can be used in place of your hand-held transmitters.
To operate, the key must be turned to the "accessory" position (II) or the engine must be running. Press the programmed HomeLink® button to activate the garage door, driveway gate, security lighting, home security system, etc.
Your original hand-held transmitters may, of course, be used at any time.

Erasing programmed buttons

Individual buttons cannot be erased. To erase all three programmed buttons:
- Turn the ignition key to the "accessory" position (II).
- Hold down the two outside buttons on the HomeLink® Universal Transceiver for about 20 seconds, until HomeLink®'s indicator light begins to flash.
- Release both buttons.

The HomeLink® buttons can be reprogrammed using the procedures described on the previous page.

Reprogramming a single HomeLink® button
- Press and hold the desired HomeLink® button. **Do not release** the button until step 3 has been completed.
- When the indicator light begins to flash slowly (after approximately 20 seconds), position your hand-held transmitter 2 to 5 in. (5 to 12 cm) away from the HomeLink® surface.
- Press and hold the hand-held transmitter button. The HomeLink® indicator light will flash first slowly, then rapidly. When the indicator light flashes rapidly, release both buttons.

The previously programmed device has now been erased and the new device can be activated by pressing the HomeLink® button that has just been programmed. This procedure will not affect any other programmed HomeLink® buttons.

NOTE:
- Retain the original transmitter(s) for future programming procedures (e.g., if you purchase a new vehicle).
- For your own security, erase all programmed buttons on the HomeLink® Universal Transceiver when you sell your vehicle.
- Metallic sun protection films should not be used on any windows in a vehicle equipped with HomeLink® Universal Transceiver. This could interfere with the transceiver's function.

pg. 246 Audio

This page left intentionally blank.

---

2 0 0 7
VOLVO
XC70

Index

pg. 247-250 Index

A

A/C (air conditioning) 77-82
ABS 2, 49, 137
Accessory installation (special warnings) 6
Active Bi-Xenon headlights (ABL) 55
Air conditioning 77-82
Air distribution 75, 78
Air quality sensor 79
Air vents 75
Alarm 116
All Wheel Drive 134
All Wheel Drive -towing 143
Anti-lock Brake System (ABS) 2, 49
Audio system 226
AUTO (climate control) 77
Automatic transmission 130
Automatic transmission - kickdown 131
Automatic transmission - Sport mode 133
Average speed 61
AWD 134

B

Battery 187, 195
  replacing 197

Belt check 188
Black Box (Vehicle Event Data) 184
Blower (fan) 77
Booster cushion (integrated) 40
Brake circuit 136
Brake fluid 193
Brake light 203
Brake system 48, 136
Bulbs 198
C
Capacities 216
Capacity weight 167
Carbon monoxide warning 122
Catalytic converter 219
Central locking system - remote control 111
Changing coolant 188
Check Engine warning light 48
Child safety 28
  child restraints 31
Child safety lock 115
Climate system 74
Clock 46
Cold weather precautions 151
Coolant 192
  changing 188, 192
  checking level of 188
Cooling system 218
Courtesy light 88
Cruise control 62
Curb weight 167
Current fuel consumption 61
D

Defroster 77
Detachable trailer hitch 147
Door mirror defroster 60
Driver distraction 6
DSTC 52
Dynamic Stability and Traction Control (DSTC) 52
E
Economical driving 127
Electric socket 52
Electrically operated moonroof 70
Emission inspection 186
Engine - starting 125
Engine compartment 189
Engine oil 190, 217
Engine specifications 223
F
Federal Clean Air Act 184
FIX NEXT SERVICE 51
Fluids 218
Fog light 48
Front fog light, changing 202
Front park assist 153
Front seat - backrest 85
Front seats 86
Front suspension 220
Fuel 120
Fuel filler cap 2, 124
Fuel filler door 2, 123
Fuel gauge 46
Fuel tank, capacity 216
Fuses 205
G

Gasoline 120
Gear positions 129
Geartronic 132
  Manual shifting 132
Generator warning light 48
Gross vehicle weight (GVW) 167
H
Handling 127
Hazard warning flashers 60
Headlight wiper blades 194
Headlights 57
Heated front seats 78
High beam flash 57
High beam headlights 57
High beam indicator 46
Hoisting the car 187
Home safe lighting 57
HomeLink® Universal Transceiver 243
Hood - opening 189
I
Ignition switch 126
Immobilizer (start inhibitor) 110
Indicator and warning symbols 46, 47
Inflation pressure table
  Canadian models 161
  US models 160
Inflation pressure, checking 159
Inspection, preparing for 186
Integrated booster cushion 40
Interior lighting 88
J
Jack 175

K

Keylock 2, 125
Kickdown 131

L

Label information 213
Load carriers 148 -150
Locking steering wheel 126
Locking the car 114
Long distance trips 152
Low beam bulb, changing 199
Low beam headlights 57

M

Maintenance services 184
Maintenance, periodic 185
Malfunction indicator light 48
Manual transmission 129
Moonroof 70
Multifilter with air quality sensor 79

O

Occupant Weight Sensor 18
Octane rating 121
Odometer 46
Oil pressure 48
Oil quality 190
Owner maintenance 185

P

P Park 130, 132
Paint - color code 182
Park assist 153
Parking brake 48, 64
Parking light bulb, changing 200
Periodic owner-performed maintenance 185

Permissible axle weight 167
Polishing 179
Power moonroof 70
Power seats 86
Power steering fluid 193
Power steering, speed sensitive 128
Power windows 65
PROPOSITION 65 WARNING 144
R
Radiator 189
Radio 229
Rain sensor - windshield wipers 58
Rear park assist 153
Rear suspension 220
Rear window defroster 60
Recirculation 78
REDUCE SPEED 51
Refrigerant (A/C system) 74
Refueling 123
Reporting safety defects
  Canada 11
  USA 10
Roadholding 127
Roof racks (load carriers) 148 - 150
Run flat tires 164
S
Safety defects, reporting
  Canada 11
  USA 10
Seats, front 86
SEE MANUAL 51
Self supporting run flat tires 164

Service 184
Service key 110
Service reminder 47
SERVICE REQUIRED 51
SERVICE URGENT 51
Shiftlock 2, 125
Side marker light, changing 202
Snow chains 170
Snow tires 170
Speedometer 46
Sport mode 133
Stability systems 139
Stability Traction Control (STC) 139
Start inhibitor (immobilizer) 110
Starting the car 125
STC 52, 139
Steel grid 104
Steering wheel lock 126
Stone chips, touching up 182
STOP ENGINE 51
Studded tires 170
Subwoofer
  removing from cargo area 173
  volume control 229
Subwoofer, removing 173
Sun visor 71
Supplemental Restraint System (SRS) - warning light 47
Suspension 220

T

Tachometer 46
Temperature control 77

Temperature gauge 46
Text window - messages 50
TIME FOR REGULAR SERVICE 51
Tire designations 165
Tire economy, improving 157
Tire inflation pressure table
  Canadian models 161
  US models 160
Tire inflation pressure, checking 159
Tire pressure monitoring system 49
Tire Pressure Monitoring System (TPMS) 162
Towing - cars with All Wheel Drive 143
Towing a trailer 145
Towing the car 142
Trailer hitch - detachable 147
Trailer indicator lamp 49
Trailer towing 145
Transmission
  automatic 130
  Geartronic 132
  manual 129
Tread wear indicator 156
Trip computer 61
Trip odometer 46
Turn signal, rear 203
Turn signals 57
Type designations 212

U

Uniform Tire Quality Grading 169, 175
Unlocking the car 114
Unlocking/locking the tailgate 114
Use of Additives 121

V

Valet key	110
Vanity mirror	89
Vanity mirror bulb, changing	204
Vehicle Event Data	184
Vehicle Identification Number (VIN)	213
Vehicle loading	167
Vehicle weights	215
VIN (Vehicle Identification Number)	213
Volvo and the environment	4

W

W - Winter	131, 133
Warning symbol in center of dashboard	47
Warranties	184
Washer fluid reservoir	189, 192
Washing the car	178
Waxing	179
Weight distribution	127
Weights	215
Windshield washer fluid reservoir	192
Windshield wipers	58
Winter/Wet driving mode	151

Contents | Top of Page