OPEL Vivaro

Owner's Manual

Wir leben Autos.

Contents

Introduction 2
In brief 6
Keys, doors and windows 21
Seats, restraints 43
Storage 67
Instruments and controls 75
Lighting 95
Climate control 101
Driving and operating 112
Vehicle care 138
Service and maintenance 174
Technical data 178
Customer information 193
Index 196

Introduction

Fuel	Designation			
Engine oil	Grade			
	Viscosity			
Tyre pressure		Tyre size	Front	Rear
	Summer tyres			
	Winter tyres			
Weights				
	Gross vehicle weight rating			
	- Kerb weight, basic model			
	- Additional weight			
	- Heavy accessories			
	= Loading			

Vehicle specific data

Please enter your vehicle's data on the previous page to keep it easily accessible. This information is available under the sections "Service and maintenance" and "Technical data" as well as on the identification plate.

Introduction

Your vehicle is a designed combination of advanced technology, safety, environmental friendliness and economy.

This Owner's Manual provides you with all the necessary information to enable you to drive your vehicle safely and efficiently.

Make sure your passengers are aware of the possible risk of accident and injury which may result from improper use of the vehicle.

You must always comply with the specific laws and regulations of the country that you are in. These laws may differ from the information in this Owner's Manual.

When this Owner's Manual refers to a workshop visit, we recommend your Opel Service Partner.

All Opel Service Partners provide first-class service at reasonable prices. Experienced mechanics trained by Opel work according to specific Opel instructions.

The customer literature pack should always be kept ready to hand in the vehicle.

Using this manual

- This manual describes all options and features available for this model. **Certain descriptions, including those for display and menu functions, may not apply to your vehicle due to model variant, country specifications, special equipment or accessories.**
- The "In brief" section will give you an initial overview.
- The table of contents at the beginning of this manual and within each section shows where the information is located.
- The index will enable you to search for specific information.
- This Owner's Manual depicts left-hand drive vehicles. Operation is similar for right-hand drive vehicles.
- The Owner's Manual uses the factory engine designations. The corresponding sales designations can be found in the section "Technical data".
- Directional data, e.g. left or right, or front or back, always relate to the direction of travel.
- The vehicle display screens may not support your specific language.
- Display messages and interior labelling are written in **bold** letters.

Danger, Warnings and Cautions

⚠ Danger
Text marked ⚠ **Danger** provides information on risk of fatal injury. Disregarding this information may endanger life.

⚠Warning
Text marked ⚠**Warning** provides information on risk of accident or injury. Disregarding this information may lead to injury.

Caution
Text marked **Caution** provides information on possible damage to the vehicle. Disregarding this information may lead to vehicle damage.

Symbols

Page references are indicated with ⇨.
⇨ means "see page".

We wish you many hours of pleasurable driving.

Adam Opel AG

In brief

Initial drive information

Vehicle unlocking

Unlocking with remote control

Press button to unlock the driver's door. Press again to unlock entire vehicle.

Open the doors by pulling the handles.

Press button ; only the load compartment and sliding side doors are unlocked.

Radio remote control ⇨ 21, Central locking system ⇨ 25, Load compartment ⇨ 33, Unlocking with manual key ⇨ 25.

Unlocking with electronic key

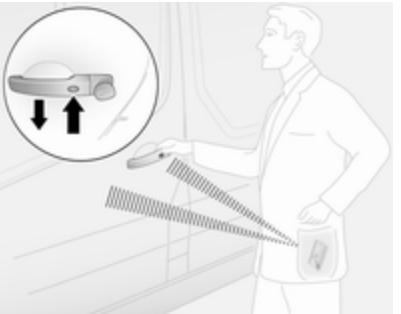

Press the button on any exterior door handle when the electronic key is within range of the detection zone (approx. one metre of the front doors or load compartment) and pull the handle to open.

- or -

Press electronic key button to unlock all doors and the load compartment.

Electronic key system ⇨ 23.

Seat adjustment

Seat positioning

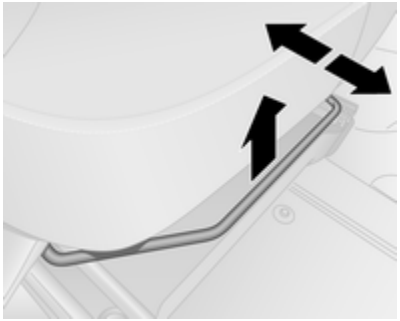

Pull handle, slide seat, release handle.

Seat position ⇨ 44, Seat adjustment ⇨ 45.

⚠ Danger

Do not sit nearer than 25 cm from the steering wheel, to permit safe airbag deployment.

Seat backrests

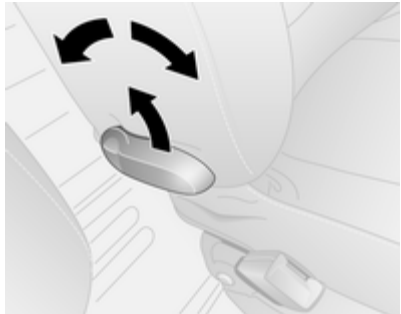

Pull lever, adjust inclination and release lever. Allow the backrest to engage. Do not lean on backrest when adjusting.

Seat position ⇨ 44, Seat adjustment ⇨ 45.

Seat height

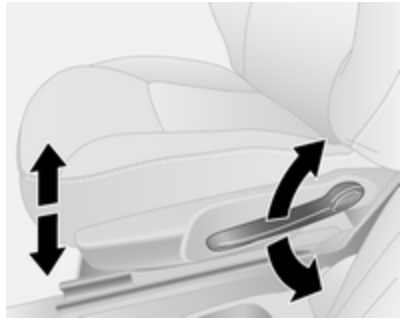

Lever pumping motion:

up = seat higher
down = seat lower

Seat position ⇨ 44, Seat adjustment ⇨ 45.

Head restraint adjustment

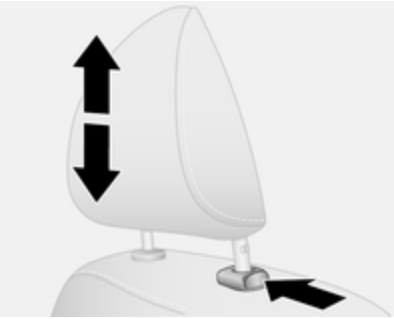

Press release button, adjust height, engage.

Head restraints ⇨ 43.

Seat belt

Pull out the seat belt and engage in belt buckle. The seat belt must not be twisted and must fit close against the body. The backrest must not be tilted back too far (maximum approx. 25°).

To release belt, press red button on belt buckle.

Seat position ⇨ 44, Seat belts ⇨ 50, Airbag system ⇨ 53.

Mirror adjustment

Interior mirror

To reduce dazzle, adjust the lever on the underside of the mirror housing.

Interior mirror, Wide view mirror ⇨ 39, Automatic anti-dazzle interior mirror ⇨ 40.

Exterior mirrors

Manual adjustment

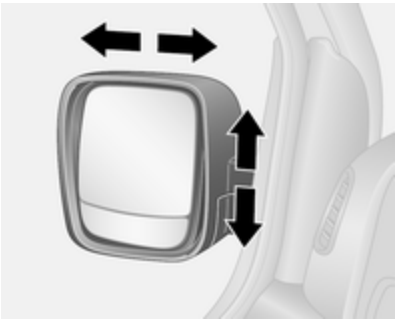

Swivel mirror in required direction.

The lower mirrors are not adjustable.

Exterior mirrors ⇨ 38.

Electric adjustment

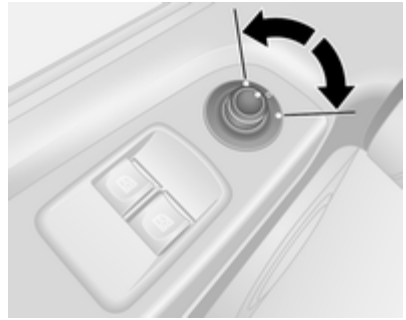

Select the relevant exterior mirror and adjust it.

Convex exterior mirrors ⇨ 38, Electric adjustment ⇨ 38, Folding exterior mirrors ⇨ 38, Heated exterior mirrors ⇨ 39.

Steering wheel adjustment

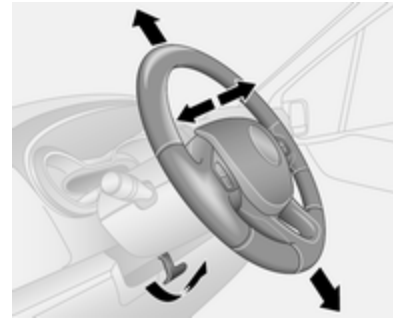

Unlock the lever, adjust the steering wheel, then engage the lever and ensure it is fully locked.

Do not adjust the steering wheel unless vehicle is stationary and the steering wheel lock has been released.

Airbag system ⇨ 53, Ignition positions ⇨ 114.

Instrument panel overview

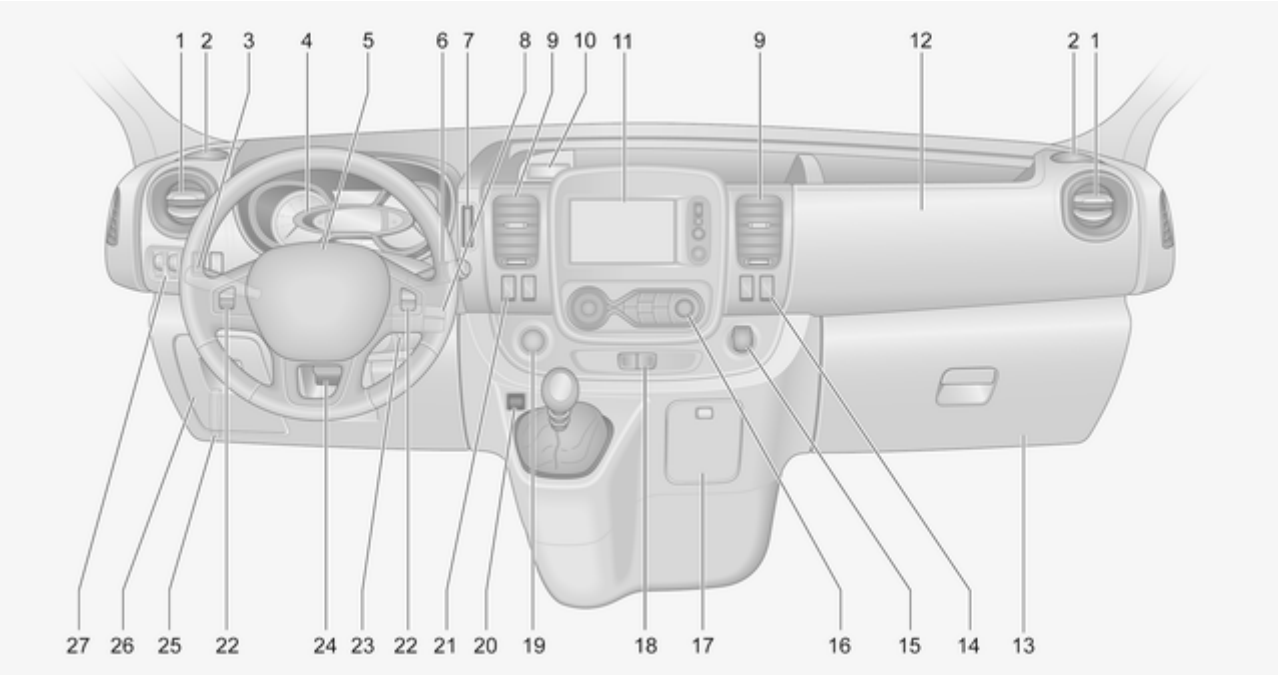

1 Side air vents 110
2 Ashtray 80
Cupholder 68
3 Light switch 95
Rear fog light 98
Front fog lights 98
Exit lighting 100
Turn and lane-change signals 97
Sidelights 95
Headlight flash, low beam and high beam 96
4 Instruments 80
Driver Information Centre 90
5 Horn 76
Driver airbag 57
6 Windscreen wiper, windscreen washer system .. 76
Rear window wiper, rear window washer system 77
Trip computer 92
7 Card reader for electronic key system 23
8 Steering column controls 76
9 Centre air vents 110
10 Power outlet 79
Cigarette lighter 79
Coin tray, USB slot 67
11 Driver Information Centre 90
Trip computer 92
12 Front passenger airbag 57
13 Glovebox 67
14 Heated exterior mirrors 39
Heated rear window 42
Idle speed control 116
15 Power outlet 79
Cigarette lighter 79
16 Climate control system 101
Electronic climate control system 103
17 Ashtray 80
Cupholder 68
18 Hazard warning flashers 97
Central locking system 25
19 Power button for electronic key system 114
20 Eco button for fuel economy mode 112
21 Stop-start system 117
Cruise control and speed limiter 126
22 Remote control on steering wheel 75
Cruise control 126
23 Ignition switch with steering wheel lock 114
24 Steering wheel adjustment . . . 75
25 Bonnet release lever 140
26 Fuse box 153
27 Ultrasonic parking assist 130
Electronic Stability Program 125
Traction Control system 124
Headlight range adjustment 96

Instrument panel illumination control 98

Auxiliary heater 106

Speed limiter 130

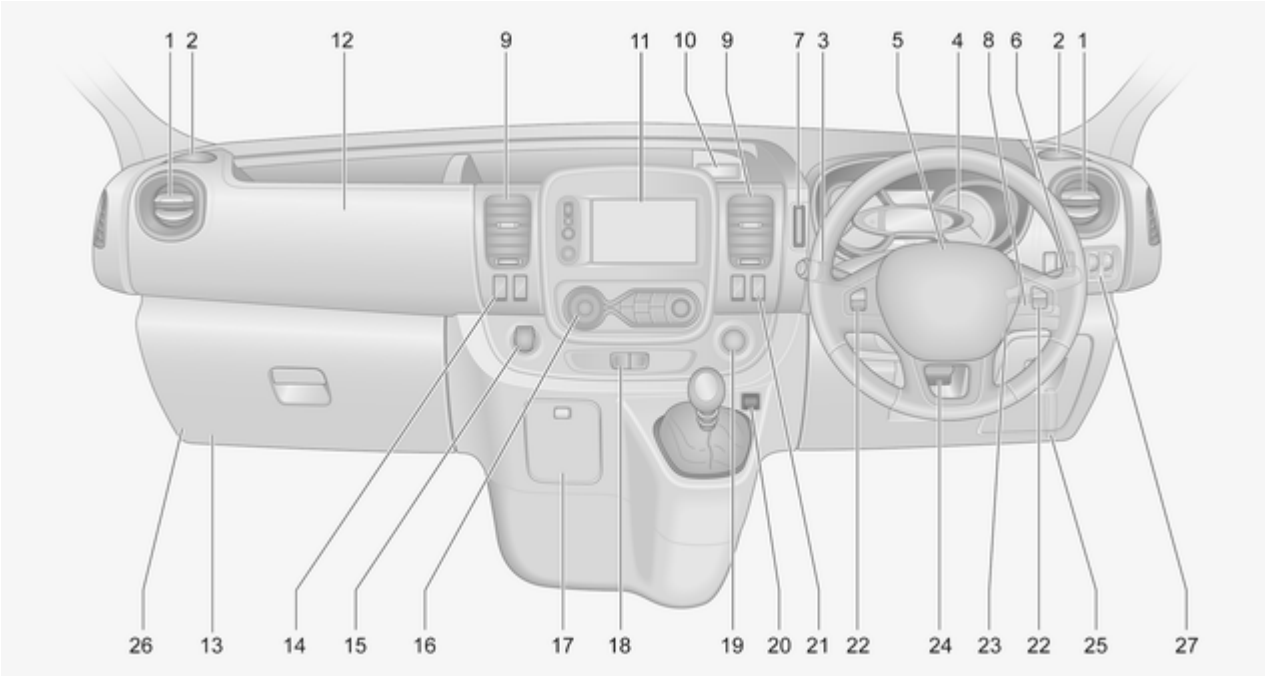
1 2 12 9 11 10 9 7 3 5 4 8 6 2 1
26 13 14 15 16 17 18 19 20 21 22 24 23 22 25 27

Exterior lighting

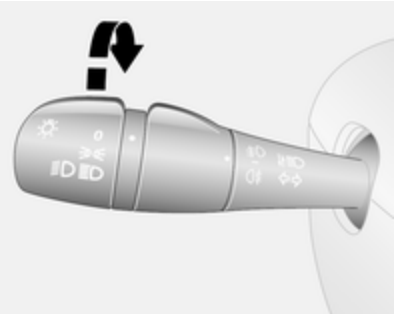

Turn outer switch:

0 = off
⇒⇐ = sidelights
≣D≣D = headlights

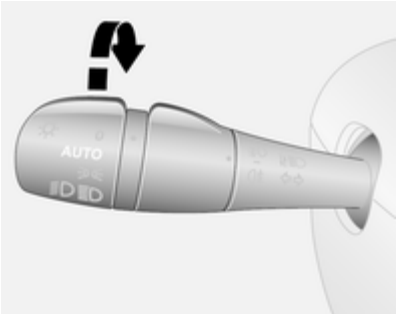

Vehicles with automatic light control:

AUTO = automatic light control: exterior lighting is switched on and off automatically depending on external lighting conditions.

Lighting ⇨ 95, Automatic light control ⇨ 95, Headlight warning device ⇨ 91, Adaptive forward lighting ⇨ 97.

Front and rear fog lights

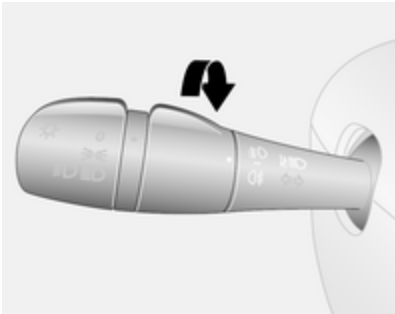

Turn inner switch

≢D = front fog lights
◐≢ = rear fog light

Front fog lights ⇨ 98, Rear fog light ⇨ 98.

Headlight flash, high beam and low beam

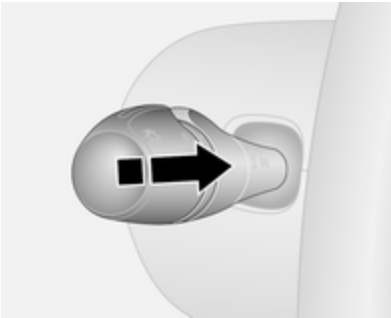

headlight flash = pull lever
high beam = push lever
low beam = push or pull lever

Automatic light control ⇨ 95, High beam ⇨ 96, Headlight flash ⇨ 96.

Turn and lane-change signals

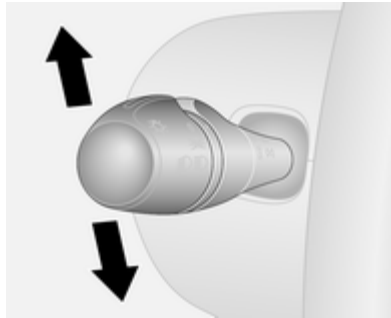

lever up = right turn signal
lever down = left turn signal

Turn and lane-change signals ⇨ 97.

Hazard warning flashers

Operated with the ⚠ button.

Hazard warning flashers ⇨ 97.

Horn

Press 📯.

Washer and wiper systems

Windscreen wiper

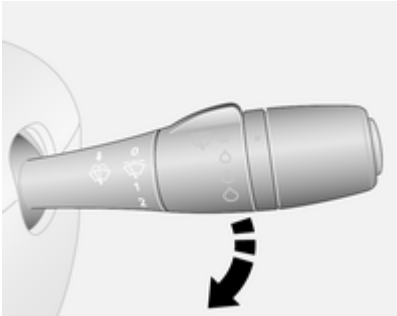

0 = off
⌔ = interval wiping or automatic wiping with rain sensor
1 = slow
2 = fast

Windscreen wiper ⇨ 76, Wiper blade replacement ⇨ 146.

Windscreen and headlight washer systems

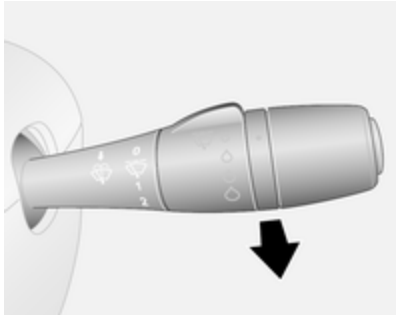

Pull lever.

Windscreen and headlight washer system ⇨ 76, Washer fluid ⇨ 143.

Rear window wiper and washer system

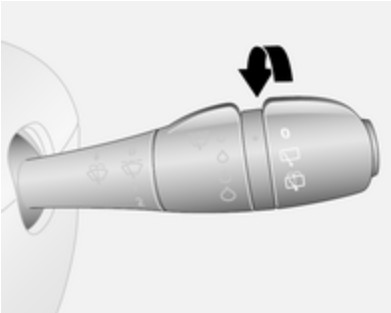

Turn lever:

0 = off
= wiper
= washer

Rear window wiper/washer ⇨ 77, Washer fluid ⇨ 143.

Climate control

Heated rear window

Heating is operated by pressing the button.

Heated rear window ⇨ 42.

Heated exterior mirrors

Pressing the button also activates the heated exterior mirrors.

Heated exterior mirrors ⇨ 39.

Demisting and defrosting the windows

Climate control system

- Air distribution to .
- Set temperature control to warmest level.
- Set fan speed to highest level.
- Cooling **AC** on.
- Heated rear window on.

Climate control system ⇨ 101.

Electronic climate control system

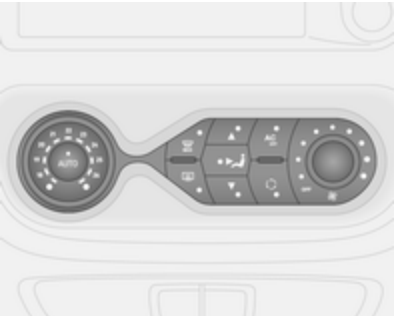

- Press button MAX. LED illuminates in the button when activated.
- Temperature, air distribution and cooling are regulated automatically and the fan runs at high speed.
- Switch on heated rear window ⇨ 42.

Electronic climate control system ⇨ 103.

Transmission

Manual transmission

Reverse: with the vehicle stationary, wait 3 seconds after depressing clutch pedal and then pull up the collar on the selector lever and engage the gear.

If the gear does not engage, set the lever to neutral, release the clutch pedal and depress again; then repeat gear selection.

Manual transmission ⇨ 121.

Starting off

Check before starting off

- Tyre pressure and condition ⇨ 157, ⇨ 192.
- Engine oil level and fluid levels ⇨ 140.
- All windows, mirrors, exterior lighting and number plates are free from dirt, snow and ice and are operational.
- Proper position of mirrors, seats and seat belts ⇨ 38, ⇨ 44, ⇨ 51.
- Brake function at low speed, particularly if the brakes are wet.

Starting the engine with key

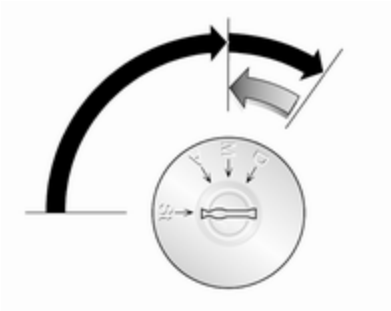

- Turn key to position **A**
- move the steering wheel slightly to release the steering wheel lock
- operate clutch and brake pedal
- do not operate accelerator pedal
- diesel engines: turn the key to position **M** for preheating and wait until control indicator extinguishes in the Driver Information Centre.
- turn key to position **D** and release

Starting the engine ⇨ 116.

Starting the engine with the power button

Electronic key must be inside the vehicle, either in the card reader or the front passenger compartment.

- Move the steering wheel slightly to release the steering wheel lock
- operate clutch and brake pedal
- do not operate accelerator pedal
- press **Start/Stop** button and release
- engine starts after a short delay

Power button ⇨ 114.

Stop-start system

If the vehicle is at low speed or in standstill and certain conditions are fulfilled, activate an Autostop as follows:

- Depress the clutch pedal
- Move the selector lever to neutral
- Release the clutch pedal

An Autostop is indicated when Ⓐ illuminates in the instrument cluster ⇨ 89.

To restart the engine, depress the clutch pedal again.

Stop-start system ⇨ 117.

Parking

⚠ Warning

- Do not park the vehicle on an easily ignitable surface. The high temperature of the exhaust system could ignite the surface.
- Always apply parking brake without pressing release button. Apply as firmly as possible on a downhill slope or uphill slope. Depress foot brake at the same time to reduce operating force.
- Switch off the engine.
- If the vehicle is on a level surface or uphill slope, engage first gear. On an uphill slope, turn the front wheels away from the kerb.

  If the vehicle is on a downhill slope, engage reverse gear. Turn the front wheels towards the kerb.

- Turn the ignition key to position **St** and remove it. Turn the steering wheel until the steering wheel lock is felt to engage.
- Close the windows.
- Lock the vehicle with button 🔒 on the remote control ⇨ 25.

  Activate the anti-theft alarm system ⇨ 35.
- The engine cooling fans may run after the engine has been switched off ⇨ 139.
- After running at high engine speeds or with high engine loads, operate the engine briefly at a low load or run in neutral for approx. 30 seconds before switching off, in order to protect the turbocharger.

Keys, locks ⇨ 21, Laying the vehicle up for a long period of time ⇨ 138.

Keys, doors and windows

Keys, locks 21
Doors 31
Vehicle security 34
Exterior mirrors 38
Interior mirrors 39
Windows 40

Keys, locks

Keys

Replacement keys

The key number is specified on the key or on a detachable tag.

The key number must be quoted when ordering replacement keys as it is a component of the immobiliser system.

Locks ⇨ 171, Radio remote control ⇨ 21, Electronic key system ⇨ 23, Central locking ⇨ 25, Starting the engine ⇨ 116.

Car Pass

The Car Pass contains security related vehicle data and should therefore be kept in a safe place.

When the vehicle is taken to a workshop, this vehicle data is needed in order to perform certain operations.

Radio remote control

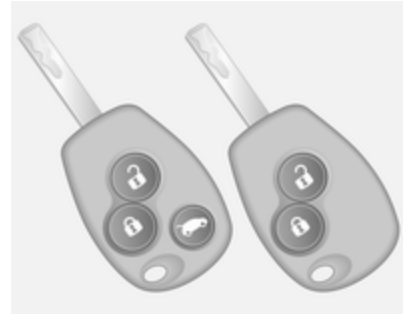

Used to operate:

- Central locking system ⇨ 25
- Anti-theft locking system ⇨ 34
- Anti-theft alarm system ⇨ 35
- Load compartment ⇨ 33

The remote control has a range of approx. 5 metres. It can be restricted by external influences. The hazard warning flashers confirm operation.

Handle with care, protect it from moisture and high temperatures and avoid unnecessary operation.

Depending on model, the vehicle may use a 2 button or 3 button remote control or an electronic key which includes the functionality of the radio remote control.

Electronic key system ⇨ 23.

Fault

If the central locking system cannot be operated with the remote control, it may be due to the following:

- Range exceeded
- Battery voltage too low
- Frequent, repeated operation of the remote control while not in range, which will require reprogramming by a workshop
- Overload of the central locking system by operating at frequent intervals, the power supply is interrupted for a short time
- Interference from higher-power radio waves from other sources

Manual key operation ⇨ 25.

Remote control battery replacement

Replace the battery as soon as the range reduces.

Batteries do not belong in household waste. They must be disposed of at an appropriate recycling collection point.

2-button and 3-button remote control

Remove screw and open battery compartment by inserting a coin into the slot and twisting.

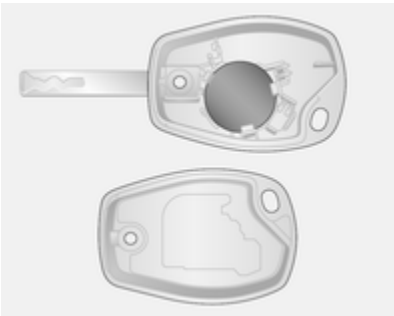

Replace the battery (battery type CR 2016), paying attention to the installation position.

Reattach both halves of the cover, ensuring they engage correctly.

Replace screw and tighten.

Electronic key

The need for battery replacement is indicated by a message in the Driver Information Centre ⇨ 91.

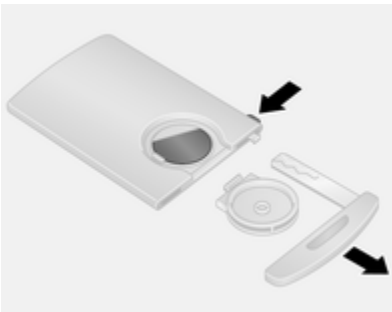

Press and hold the release button on the side of the electronic key and pull out the emergency manual key from the top. Unclip the battery cover located on the rear of the electronic key, then press one side of the battery to release and remove the battery.

Replace the battery (battery type CR 2016), paying attention to the installation position.

Reattach battery cover and reinsert the emergency manual key.

Electronic key synchronisation

Press any button on the electronic key four times within range of the detection zone (approx. one metre) of the front doors or load compartment. The electronic key will be synchronised when the ignition is switched on.

Electronic key system

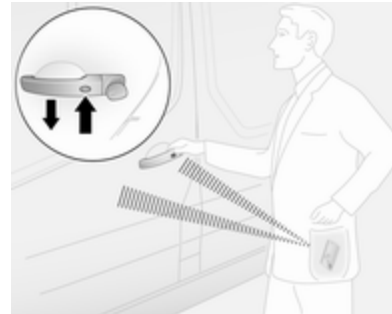

Enables a handsfree operation of the following functions:

- Central locking system ⇨ 25
- Load compartment ⇨ 33
- Ignition switching on and starting the engine ⇨ 114

The electronic key simply needs to be on the driver's person.

Note
Always take the electronic key with you when exiting the vehicle.

The electronic key being left in the card reader is indicated by a warning chime ⇨ 91 and a message in the Driver Information Centre ⇨ 91 when the driver's door is opened.

Additionally, the electronic key includes the functionality of the radio remote control ⇨ 21 and an entry lighting function ⇨ 100.

Handle with care, protect from moisture and high temperatures and avoid unnecessary operation.

Note
Do not put the electronic key in the load compartment during driving, as this is outside of the detection zone (indicated by a warning chime at low speed ⇨ 91 and a message in the Driver Information Centre ⇨ 91).

Handsfree operation is automatically disabled when the electronic key buttons have been operated or the central locking switch ⇨ 25 is pressed. To re-enable handsfree operation, restart the engine.

Power button ⇨ 114.

Replacing battery in electronic key

Replace the battery as soon as the system no longer operates properly or the range is reduced. The need for battery replacement is indicated by a message in the Driver Information Centre ⇨ 91.

Battery replacement, see Radio remote control ⇨ 21.

Fault

If the central locking system cannot be operated or the engine cannot be started, the cause may be one of the following:

- Fault in electronic key.
- Electronic key out of reception range.
- Battery voltage too low.
- Overload of the central locking system by operating at frequent intervals, the power supply is interrupted for a short time.
- Interference from higher-power radio waves from other sources.

Emergency manual key

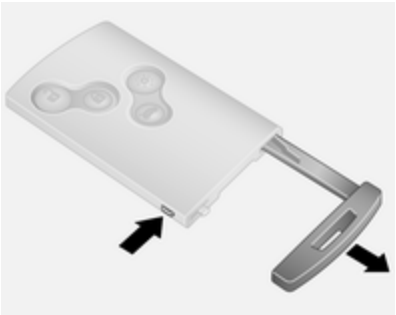

Press and hold the release button on the side of the electronic key and pull out the emergency manual key from the top.

Manually lock or unlock the doors by turning the key in the lock.

After use, reinsert the emergency manual key in the housing of the electronic key.

Door locks

Anti-theft security lock

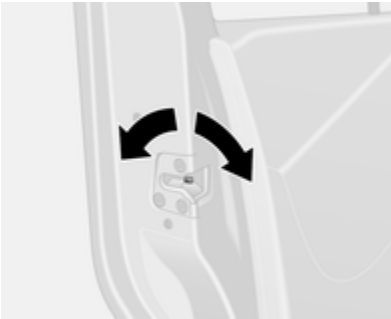

To prevent the front door from being opened from the outside, open the door and engage the anti-theft security lock.

Using a suitable tool, turn the lock switch on the door to the locked position. The door cannot be opened from outside.

The anti-theft security lock remains engaged even after unlocking the vehicle with the remote control. The door can only be opened from inside or by using the manual key.

To disengage, turn the switch to the unlocked position.

Central locking system

Unlocks and locks the front doors, sliding side doors and load compartment.

With the 3-button remote control, the front doors and load compartment/ sliding side doors (where fitted) can be unlocked and locked separately.

For safety reasons, the vehicle cannot be locked if the key is in the ignition switch.

Note
If no door is opened within approx. 2 minutes after the vehicle has been unlocked, the vehicle is re-locked automatically.

Close doors and load compartment. If the doors are not closed properly, the central locking system will not work.

Remote control operation

Operation of central locking system with the remote control is confirmed by the hazard warning flashers.

Unlocking with 2-button remote control

Depending on configuration:

- Press button once to unlock the driver's door, and press twice to unlock all doors and the load compartment.

  - or -

- Press button once to unlock all doors and the load compartment.

Unlocking with 3-button remote control

Depending on configuration:

- Press button once to unlock the driver's door, and press twice to unlock all doors and the load compartment.

  - or -

- Press button once to unlock all doors and the load compartment.

Locking with 2-button remote control

Press button : All doors and the load compartment are locked.

Locking with 3-button remote control

Press button : All doors and the load compartment are locked.

Note

Where fitted, alarm monitoring of the passenger compartment ⇨ 35 is switched off by pressing and holding button (which is confirmed by an audible signal).

If this was done unintentionally, unlock the doors again and press button briefly to lock the vehicle.

Load compartment locking and unlocking with 2-button remote control

Depending on configuration, press button once or twice to unlock the load compartment (and sliding side doors).

Press button to lock the load compartment (and sliding side doors).

Load compartment locking and unlocking with 3-button remote control

Press button to lock or unlock load compartment (and sliding side doors).

Electronic key system operation

For handsfree operation, the electronic key must be outside the vehicle, within a range of approx. one metre of the front doors or load compartment.

Note
There is no button for handsfree operation in the exterior door handle of the sliding side door.

There must be no electronic key left inside the vehicle and no additional electronic key in the detection zones, or handsfree operation of the central locking system will not work.

Operation of central locking system with the electronic key is confirmed by the hazard warning flashers.

⚠ Danger

Never leave an electronic key inside the vehicle when children or animals are left in the vehicle, to avoid unintended operation of windows, doors or engine. Risk of fatal injury.

Unlocking with electronic key - handsfree operation

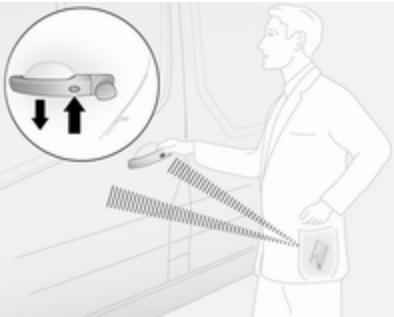

Press the button on any exterior door handle and pull the handle to open.

The vehicle only unlocks when at least 3 seconds have passed since locking using handsfree operation.

Handsfree operation is automatically disabled when the electronic key buttons have been operated. To re-enable handsfree operation, restart the engine.

Unlocking with electronic key buttons

Press button to unlock all doors and the load compartment.

Locking with electronic key - handsfree operation

Press the button on any exterior door handle. All doors and the load compartment are locked.

The vehicle only locks when at least 3 seconds have passed since unlocking using handsfree operation.

Handsfree operation is automatically disabled when the electronic key buttons have been operated. To re-enable handsfree operation, restart the engine.

Locking with electronic key buttons

Press button to lock all doors and the load compartment.

Load compartment locking and unlocking with electronic key - handsfree operation

Press the button on the exterior door handle to lock or unlock the rear doors/tailgate (and sliding side doors)

when the electronic key is within range of the detection zone (approx. one metre).

The rear doors/tailgate (and sliding side doors) only lock/unlock when at least 3 seconds have passed since the button was last pressed.

Handsfree operation is automatically disabled when the electronic key buttons have been operated. To re-enable handsfree operation, restart the engine.

Load compartment locking and unlocking with electronic key buttons

Press button to lock/unlock the rear doors/tailgate (and sliding side doors).

Electronic key system ⇨ 23.

Manual key operation

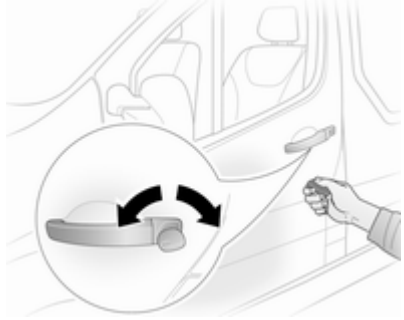

Manually lock or unlock the doors by turning the key in the lock.

Central locking switch

Locks or unlocks the doors and load compartment from the passenger compartment.

Press the switch to lock the vehicle. Activation is indicated by the LED in the button. When closing any open door, the door is locked automatically.

Press again to unlock the vehicle.

If the vehicle is driven with an open load compartment, the front doors (and sliding side doors) can still be locked. With the ignition switched on, press and hold the switch for approx. 5 seconds. When closing the rear doors/tailgate, they are locked automatically.

Automatic locking ⇨ 30.

Handsfree operation is automatically disabled when the central locking switch 🔒 is pressed. To re-enable handsfree operation, restart the engine.

Electronic key system ⇨ 23.

Slam door locks

Certain models feature load compartment locks which are isolated for added security.

With slam door locks, while the doors can be locked and unlocked using the remote control or electronic key, the load compartment must be manually opened by turning the key in the lock.

Rear doors ⇨ 31.

Automatic locking

Automatic locking after driving off

This security feature can be configured to automatically lock the doors and load compartment as soon as the vehicle is driven.

Activation

With the ignition switched on, press and hold 🔒 on the central locking switch for approx. 5 seconds. An audible signal confirms activation.

Deactivation

With the ignition switched on, press and hold 🔒 on the central locking switch for approx. 5 seconds. An audible signal confirms deactivation.

Central locking switch ⇨ 25.

Child locks

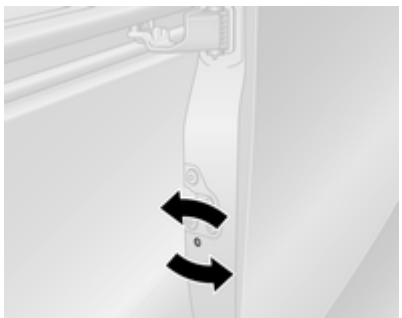

The child safety lock for the sliding side door is located on its rearward facing edge.

To prevent the sliding side door from being opened from the inside, open the door and engage the child lock.

⚠ Warning

Use the child locks whenever children are occupying the rear seats, to prevent unintentional opening from the inside.

Using a suitable tool, turn the child lock switch in the sliding side door to the locked position; the door cannot be opened from the inside.

The child lock remains engaged even after unlocking the vehicle with the remote control. The door can only be opened from outside.

For deactivation, turn the child lock switch to the unlocked position.

Doors

Sliding door

Open and close the sliding side door only when the vehicle is at a standstill with the parking brake applied.

Pull the interior handle towards the rear to unlock and open.

The door can be locked from inside the vehicle with the interior lock switch.

⚠Warning

Take care when operating the sliding side door. Risk of injury.

Ensure that nothing becomes trapped during operation and no-one is standing within the moving area.

If the vehicle is parked on a slope, open sliding doors may move accidentally on account of their weight.

Close the sliding doors before driving off.

Rear doors

To open the left-hand rear door, pull the outside handle. The door is opened from inside the vehicle by pulling the interior handle.

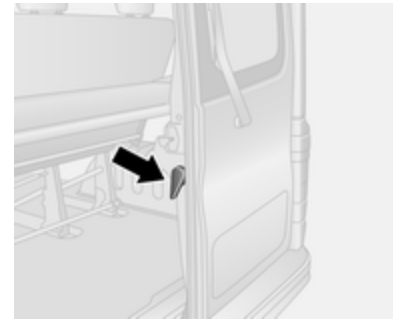

The right-hand rear door is released using the lever.

⚠Warning

The rear lights may be obscured if the rear doors are open and the vehicle is parked on the roadside.

Make other road users aware of the vehicle, by using a warning triangle or other equipment specified in the road traffic regulations.

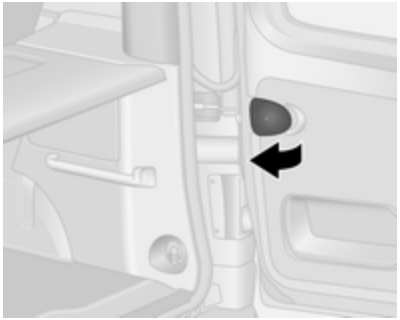

The doors are retained in the 90º position by locking stays. To open the doors to 180º or further, pull the door release handles and swing open to the desired position.

⚠ Warning

Ensure extended opening doors are secured when fully opened.

Opened doors may slam closed due to the force of the wind!

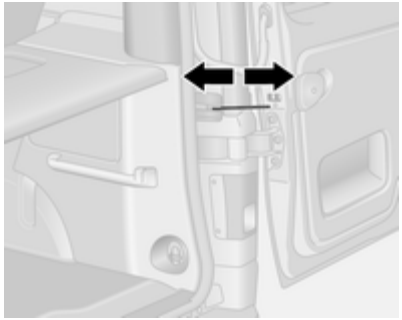

When closing the doors, secure each locking stay to the catch on the door frame.

Always close the right-hand door before the left-hand door.

Anti-theft security lock

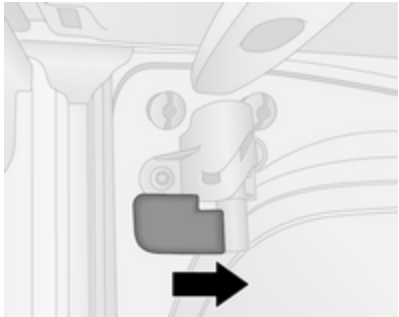

To prevent the left-hand rear door from being opened from the outside, engage the anti-theft security lock from inside the vehicle.

Turn the handle clockwise to the locked position. The door is bolted and cannot be opened from outside.

Disengage the lock by turning the handle anticlockwise, to enable the door to be opened.

Load compartment

Tailgate

Opening

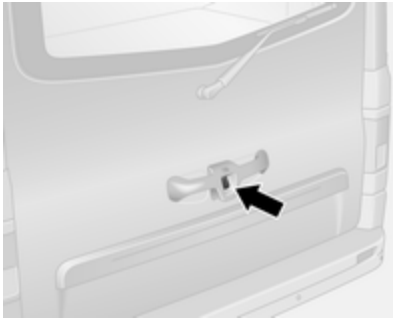

After unlocking, press tailgate button and lift tailgate to the fully open position.

The tailgate can be also opened from inside the vehicle by operating the tailgate interior release.

Note
In very cold climates, the opening assistance provided by the tailgate hydraulic struts may be reduced.

Central locking system ⇨ 25.

Closing

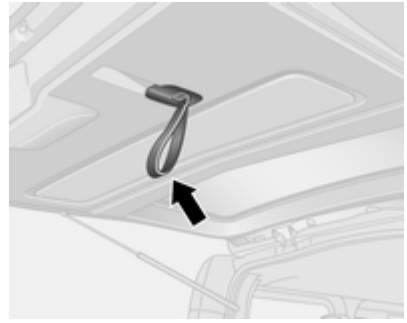

Close tailgate using the interior strap. Ensure tailgate is fully closed.

Central locking system ⇨ 25.

Emergency tailgate opening from inside the vehicle

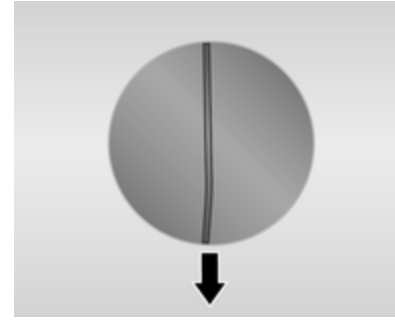

If necessary, first remove the cover on the inside of the tailgate, then pull the metal string downwards to unlock. Push the tailgate to open.

General hints for operating tailgate

⚠ Danger

Do not drive with the tailgate open or ajar, e.g. when transporting bulky objects, since toxic exhaust

gases, which can not be seen or smelled, could enter the vehicle. This can cause unconsciousness and even death.

Caution

Ensure there is adequate clearance both above (at least 2.15 m) and behind when opening tailgate.

Vehicle security

Anti-theft locking system

⚠ Warning

Do not use the system if there are people in the vehicle! The doors cannot be unlocked from the inside.

The system deadlocks all doors and the load compartment.

All doors and the load compartment must be closed or the system cannot be activated.

Note
The anti-theft locking system cannot be activated when the hazard warning lights or sidelights are switched on.

Activation and deactivation are not possible with the central locking switch.

Central locking system ⇨ 25.

2-button and 3-button remote control operation

Operation is confirmed by the hazard warning flashers flashing five times.

Activation

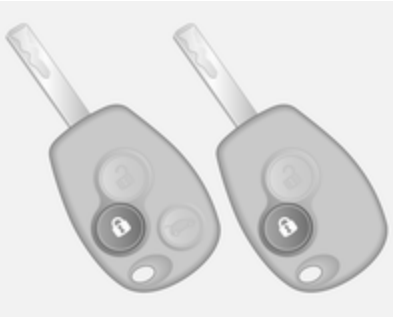

Press button 🔒 twice.

- or -

Turn manual key in driver's door lock towards rear of vehicle twice.

Deactivation

Unlock the doors by pressing button 🔓 on the remote control or by turning the manual key in driver's door lock towards front of vehicle.

Electronic key system operation

Operation is confirmed by the hazard warning flashers.

Activation

For handsfree operation, the electronic key must be outside the vehicle, within a range of approx. one metre of the front doors or load compartment.

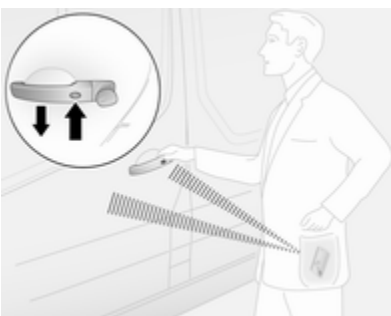

Press the button twice on any exterior door handle.

- or -

Press electronic key button 🔒 twice.

Deactivation

Unlock the doors by pressing the button on any exterior door handle or press electronic key button 🔓.

Handsfree operation is automatically disabled when the electronic key buttons have been operated (or the central locking switch 🔒 is pressed). To re-enable handsfree operation, restart the engine.

Central locking system ⇨ 25.

Electronic key system ⇨ 23.

Anti-theft alarm system

The anti-theft alarm system is operated in conjunction with the central locking system ⇨ 25.

It monitors:

- Doors, tailgate, bonnet
- Passenger compartment
- Load compartment
- Ignition
- Interruption of alarm siren power supply

Activation

All doors and the bonnet must be closed.

Hazard warning lights flash to confirm activation. If the hazard warning lights do not flash upon activation, a door or the bonnet is not fully closed.

2-button and 3-button remote control

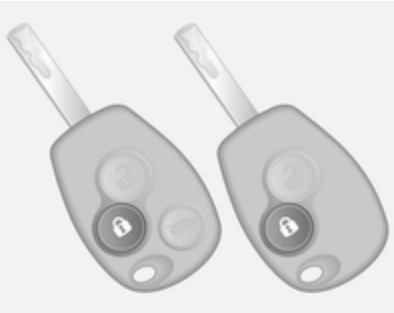

Press button 🔒 to activate the anti-theft alarm system.

Electronic key

For handsfree operation, the electronic key must be outside the vehicle, within a range of approx. one metre of the front doors or load compartment.

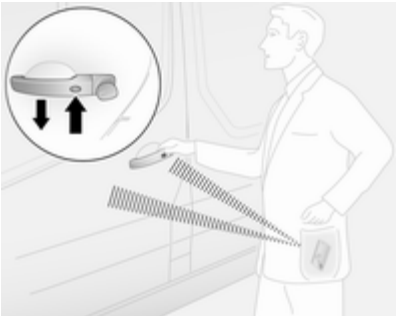

Press the button on any exterior door handle.

- or -

Press electronic key button 🔒 to activate the anti-theft alarm system.

Electronic key system ⇨ 23.

Deactivation

Unlocking the vehicle (with button 🔓 or the button on any exterior door handle) or switching on the ignition deactivates the anti-theft alarm system. Hazard warning lights flash to confirm deactivation.

The system is not deactivated when unlocking the driver's door with the key or with the central locking switch in the passenger compartment.

Note

If the alarm has been triggered, unlocking the vehicle with the key will not stop the alarm siren. To stop the siren, switch on the ignition. The hazard warning lights will not flash upon deactivation if the alarm has been triggered.

Activation without monitoring of passenger compartment

Disable monitoring of the passenger compartment, e.g. when animals are being left in the vehicle, or if the auxiliary heater has been set for a timed or remote controlled start ⇨ 106.

Press and hold button on the remote control or electronic key; an audible signal will sound as confirmation.

The status will remain until the doors are unlocked.

Alarm

When triggered, the alarm sounds via a separate battery-backed power sounder, and the hazard warning lights flash simultaneously. The number and duration of alarm signals are stipulated by legislation.

If the vehicle battery is disconnected or its power supply is interrupted, the alarm siren will be triggered. First deactivate the anti-theft alarm system if the vehicle battery must be disconnected.

To silence the alarm siren (if triggered) and therefore deactivate the anti-theft alarm system, reconnect vehicle battery and unlock the vehicle or switch on the ignition.

Immobiliser

The immobiliser is part of the ignition switch and checks whether the vehicle is allowed to be started with the key being used.

The immobiliser is activated automatically after the key has been removed from the ignition switch and also if the key is left in the ignition switch when the engine is turned off.

If the engine cannot be started, switch off the ignition and remove key, wait approx. 2 seconds and then repeat the start attempt. If start attempt is unsuccessful, attempt to start the engine using the spare key and seek the assistance of a workshop.

Note

The immobiliser does not lock the doors. You should always lock the vehicle after leaving it and switch on the anti-theft alarm system ⇨ 25, ⇨ 35.

Exterior mirrors

Convex shape

The convex exterior mirror contains an aspherical area and reduces blind spots. The shape of the mirror makes objects appear smaller, which will affect the ability to estimate distances.

Manual adjustment

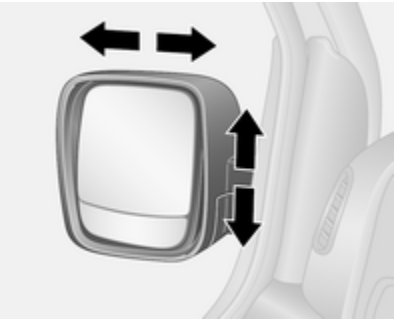

Adjust mirrors by swivelling in required direction.

The lower mirrors are not adjustable.

Electric adjustment

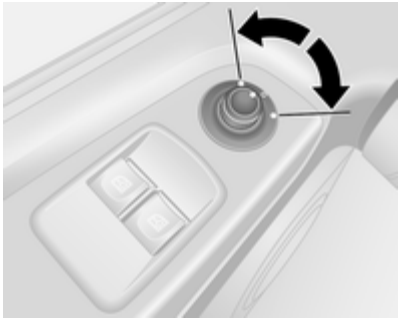

Select the relevant exterior mirror by switching the control to the left or right, then swivel the control to adjust the mirror.

No mirror is selected when the control is in the centre position.

The lower mirrors are not adjustable.

Folding mirrors

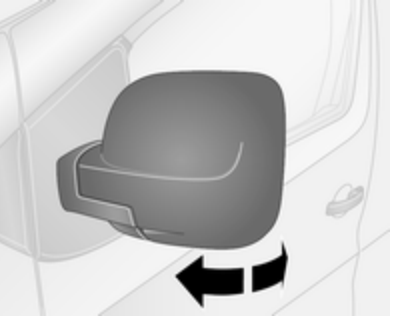

For pedestrian safety, the exterior mirrors will swing out of their normal mounting position if they are struck with sufficient force. Reposition the mirror by applying slight pressure to the mirror housing.

Parking position

The exterior mirrors can be folded in by pressing gently on the outer edge of the housing, e.g. when in a confined parking situation.

Depending on version, exterior mirrors can be automatically folded to the parking position upon locking the vehicle. For further information, refer to the Infotainment system manual.

Heated mirrors

Operated by pressing the button. Activation is indicated by the LED in the button.

Heating functions with the engine running. It is switched off automatically after a short time.

Climate control system ⇨ 101.

Interior mirrors

Manual anti-dazzle

To reduce dazzle, adjust the lever on the underside of the mirror housing.

Wide view mirror

Depending on vehicle, a large convex mirror is located in the front passenger sun visor which helps to increase visibility and reduce blind spots.

Automatic anti-dazzle

Dazzle from following vehicles at night is automatically reduced.

Windows

Windscreen

Heat-reflecting windscreen

The heat-reflecting windscreen has a coating which reflects solar radiation. Also data signals, e.g. from toll stations, might be reflected.

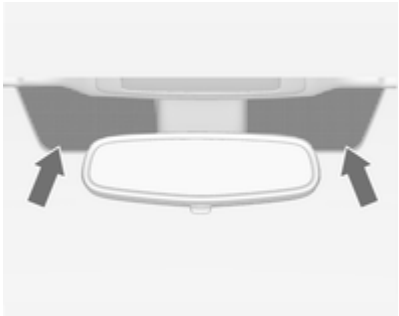

The marked areas on the windscreen are not covered with the coating. Devices for electronic data recording and fee payment must be attached in these areas. Otherwise data recording malfunctions may occur.

Windscreen stickers

Do not attach stickers such as toll road stickers or similar on the windscreen in the area of the interior mirror.

Power windows

⚠ Warning

Take care when operating the power windows. Risk of injury, particularly to children.

Keep a close watch on the windows when closing them. Ensure that nothing becomes trapped in them as they move.

Switch on ignition to operate the power windows.

Operate the switch for the respective window by pushing to open or pulling to close.

For incremental operation: Push or pull switch briefly.

For automatic opening or closing: Push or pull switch for longer. Window moves up or down automatically with safety function enabled. To stop movement, operate the switch once more in the same direction.

In the event of closing difficulties due to frost or the like, operate the switch several times to close the window in stages.

Safety function

If the window glass encounters resistance during automatic closing, it is immediately stopped and opened again.

Overload

If the windows are repeatedly operated within short intervals, the window operation is disabled for some time.

Rear windows

Sliding side windows

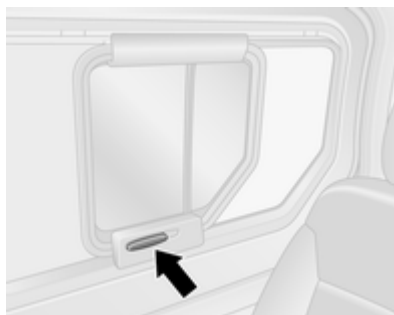

To open or close, raise the handle and slide window.

Sun blind

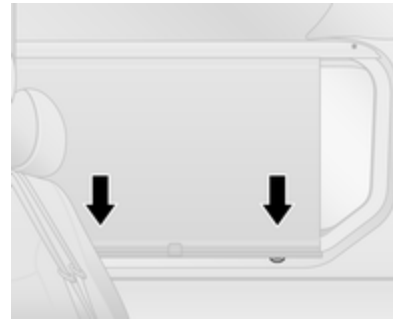

Depending on vehicle, a sunblind is integrated into the window cover.

To close, pull handle downwards and engage the locks at the bottom.

To open, disengage the locks by pulling sunblind towards you slightly and guide it upwards.

Heated rear window

Operated by pressing the button. Activation is indicated by the LED in the button.

Heating functions with the engine running and is switched off automatically after a short time.

Climate control system ⇨ 101.

Sun visors

The sun visors can be folded down or swivelled to the side to prevent dazzling.

Sun visors have vanity mirrors and a ticket holder on the rear.

The mirror covers should be closed when driving.

Wide view mirror ⇨ 39.

Seats, restraints

Head restraints 43
Front seats 44
Rear seats 47
Seat belts 50
Airbag system 53
Child restraints 60

Head restraints

Position

⚠ Warning

Only drive with the head restraint set to the proper position.

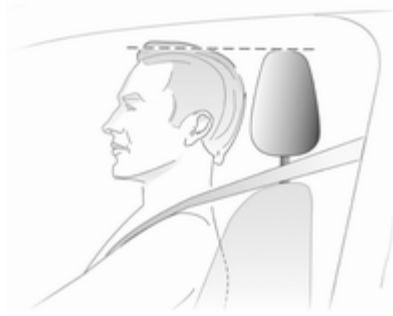

The upper edge of the head restraint should be at upper head level. If this is not possible for extremely tall people, set to highest position, and set to lowest position for small people.

Adjustment

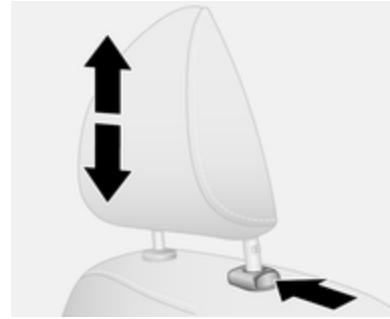

Press release button, adjust height and engage.

Note
Approved accessories may only be attached to the front passenger seat head restraint if the seat is not in use.

Removal

E.g. when using a child restraint system ⇨ 60.

First tilt the backrest forwards, then pull up head restraint to uppermost position. Press release button and pull the head restraint upwards to remove.

Stow head restraints securely in load compartment. Do not drive with head restraints removed if the seat is occupied.

Front seats

Seat position

⚠ Warning

Only drive with the seat correctly adjusted.

- Sit with buttocks as far back against the backrest as possible. Adjust the distance between the seat and the pedals so that legs are slightly angled when pressing the pedals. Slide the front passenger seat as far back as possible.
- Sit with shoulders as far back against the backrest as possible. Set the backrest rake so that it is possible to reach the steering wheel with arms slightly bent. Maintain contact between shoulders and the backrest when turning the steering wheel. Do not angle the backrest too far back. We recommend a maximum rake of approx. 25°.
- Adjust the steering wheel ⇨ 75.
- Set seat height high enough to have a clear field of vision on all sides and of all display instruments. There should be at least one hand of clearance between head and the roof frame. Thighs should rest lightly on the seat without pressing into it.
- Adjust the head restraint ⇨ 43.
- Adjust the height of the seat belt ⇨ 51.
- Adjust the lumbar support so that it supports the natural shape of the spine ⇨ 45.

Seat adjustment

⚠ Danger

Do not sit nearer than 25 cm from the steering wheel, to permit safe airbag deployment.

⚠ Warning

Never adjust seats while driving as they could move uncontrollably.

⚠ Warning

Never store any loose objects under the seats.

Underseat storage, storage box ⇨ 69.

Drive only with engaged seats and backrests.

Seat positioning

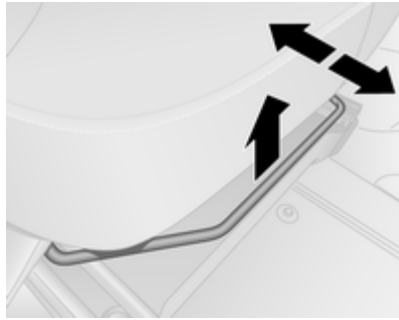

Pull handle, slide seat, then release handle.

Seat backrests

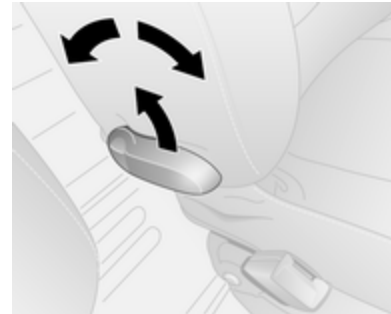

Pull lever, adjust inclination and release lever. Allow the backrest to engage audibly.

Do not lean on backrest when adjusting.

Seat height

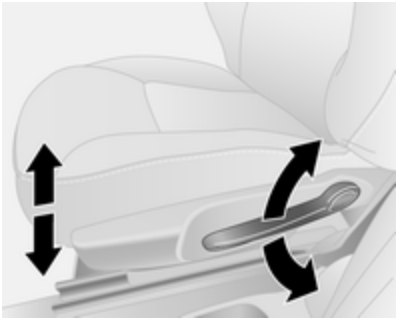

Lever pumping motion:

up = seat higher
down = seat lower

Lumbar support

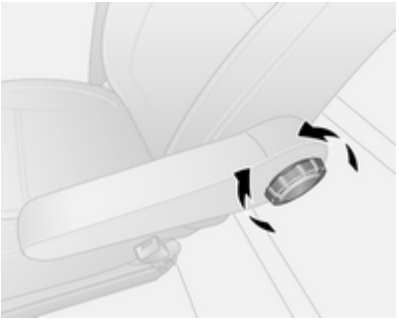

Adjust lumbar support using handwheel to suit personal requirements.

Rotate handwheel to increase and decrease support.

Seat folding

Folding front centre passenger seat

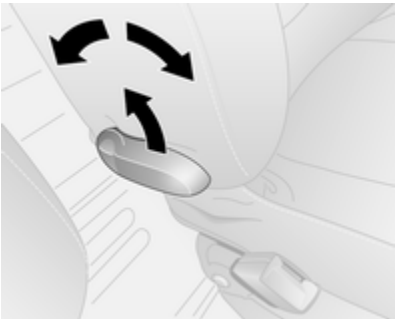

Pull release lever, fold backrest fully forwards then release the lever. Allow the backrest to engage audibly.

Note
When seat height is in its highest position, push head restraints down before folding backrest.

Ensure that nothing prevents the seat from folding, e.g. sun visor ⇨ 42, cup holder ⇨ 68.

To restore, pull release lever, raise backrest then release the lever. Allow the backrest to engage audibly.

⚠ Warning

When the front passenger seat is in the folded position, the front passenger airbag system must be deactivated.

Airbag deactivation ⇨ 58.

Armrest

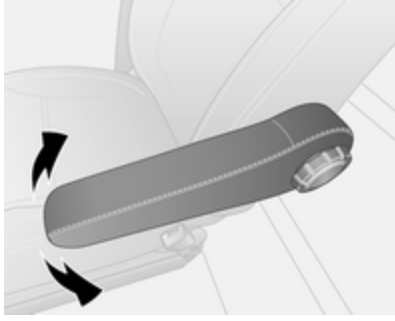

Adjust armrest support to suit personal requirements.

Heating

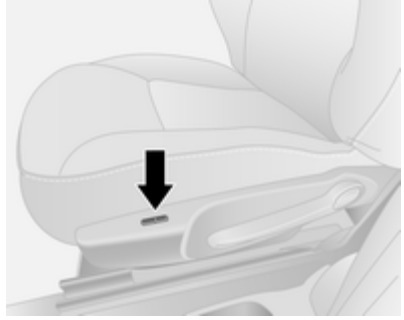

Press the button for the respective seat. Control indicator in the button illuminates. Press the button again to switch off.

Seat heating is thermostatically controlled and switches off automatically when seat temperature is sufficient.

Prolonged use of the highest setting for people with sensitive skin is not recommended.

Seat heating is operational when the engine is running.

Rear seats

⚠ Warning

When rear seats or backrests are being adjusted or folded, keep hands and feet away from the moving area.

Never adjust seats while driving as they could move uncontrollably.

Drive only with engaged seats and backrests.

When folding or removing the rear seat, ensure the armrests are folded away in their most upright position.

Rear seat access

To facilitate access to the rear seats, pull release lever and fold the seat backrest forwards. If necessary, release seat belts from their buckles.

⚠Warning

Ensure that the backrest returns to its correct position and the seat belt buckles engage securely.

Fitting seat belt ⇨ 51.

Folding seats

On some variants, the cargo area can be increased by folding up the rear seats.

⚠Warning

When folding the seat use caution - beware of moving parts. Ensure the seat is secure when completely folded.

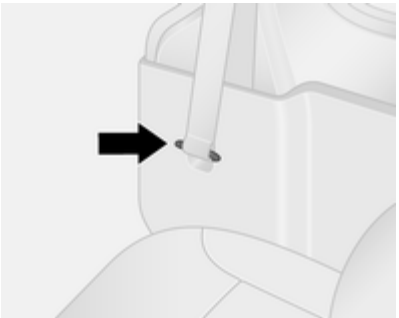

Release seat belts from their buckles and store in the housing.

If necessary, remove the head restraints ⇨ 43.

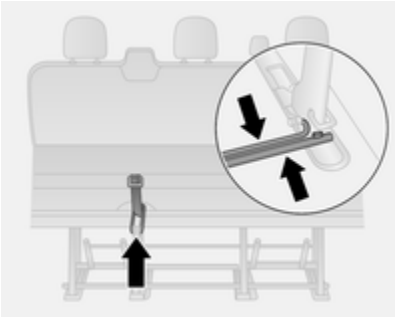

Pull the release strap and fold the backrest onto the seat.

Hold the locking bars and bring them together simultaneously.

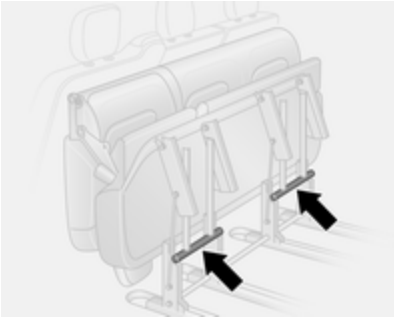

Lift and fold the seat assembly forwards until it engages in the folded forward position.

Lock the seat into position by pushing the rear support legs and ensure they are engaged.

Caution
For safety reasons, do not place loads on the folded rear seats.

When returning the seat assembly to its original position, pull locking bars, carefully lower seat assembly and ensure the rear support legs are correctly located and latched. Raise the backrest, and if necessary, replace the head restraints.

Removable rear seats

On some variants, the cargo area can be increased by removing the rear seats.

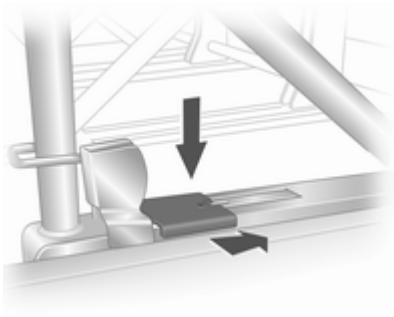

Release the seats by pressing down and sliding forward the locking catches located on the left and right-hand seat mountings.

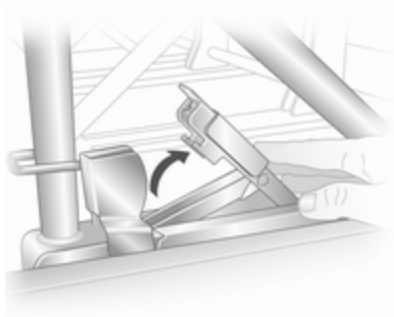

Raise the locking catches, then move the seat unit towards the rear to release from the rear floor anchor points.

Raise the seat unit, then move it towards the rear again to release from the front floor anchor points. The seat unit can then be lifted out.

The seats must be removed through the sliding door only.

⚠ Warning

Removable seats are heavy! Do not attempt to remove without assistance.

When installing the seats, ensure that the seats are properly located on the anchor points and that the locking catches are fully engaged.

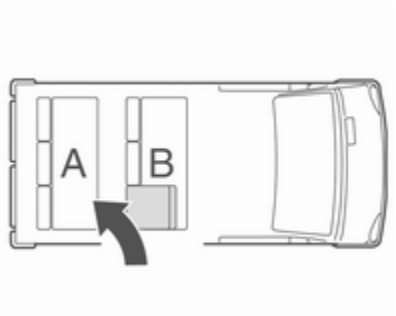

When re-installing seats always ensure that the row with the folding access seat **B** is positioned correctly in front of the fixed seat row **A**.

Seat belts

The seat belts are locked during heavy acceleration or deceleration of the vehicle holding the occupants in the sitting position. Therefore, the risk of injury is considerably reduced.

⚠ Warning

Fasten seat belt before each trip.

In the event of an accident, people not wearing seat belts endanger their fellow occupants and themselves.

Seat belts are only designed for use by one person at a time. Child restraint system ⇨ 60.

Periodically check all parts of the belt system for damage and proper functionality.

Have damaged components replaced. After an accident, have the belts and triggered belt tensioners replaced by a workshop.

Note
Make sure that the belts are not damaged by shoes or sharp-edged objects or trapped. Prevent dirt from getting into the belt retractors.

Seat belt reminder ⇨ 85.

Belt force limiters

On the front seats, stress on the body is reduced by the gradual release of the belt during a collision.

Belt tensioners

In the event of a head-on or rear-end collision of a certain severity, the front seat belts are tightened.

⚠ Warning

Incorrect handling (e.g. removal or fitting of belts) can trigger the belt tensioners with risk of injury.

Deployment of the belt tensioners is indicated by continuous illumination of control indicator ⇨ 85.

Triggered belt tensioners must be replaced by a workshop. Belt tensioners can only be triggered once.

Note
Do not affix or install accessories or other objects that may interfere with the operation of the belt tensioners. Do not make any modifications to belt tensioner components as this will invalidate the vehicle type approval.

Three-point seat belt

Fitting

Withdraw the belt from the retractor, guide it untwisted across the body and insert the latch plate into the buckle.

Tighten the lap belt regularly whilst driving by pulling the shoulder belt.

Seat belt reminder ⇨ 85.

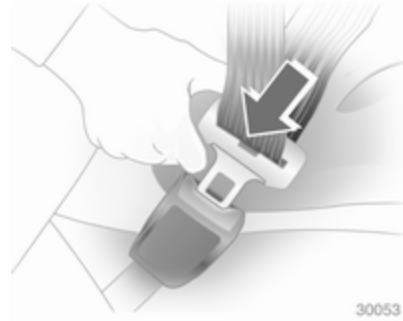

Loose or bulky clothing prevents the belt from fitting snugly. Do not place objects such as handbags or mobile phones between the belt and your body.

⚠ Warning

The belt must not rest against hard or fragile objects in the pockets of your clothing.

Height adjustment

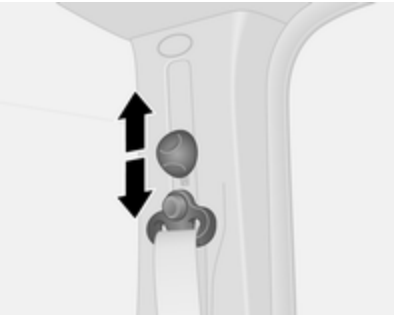

Slide adjuster up or down to desired position:

- Tilt adjuster downwards then slide downwards.
- Push up without tilting adjuster.

Adjust the height so that the belt lies across the shoulder. It must not lie across the throat or upper arm.

⚠ Warning
Do not adjust while driving.

Removing

To release belt, press red button on belt buckle.

Seat belts on the rear seats

Two-latch belt

Before fitting the belt, first insert lower latch plate into the left-hand buckle. Guide the upper latch plate with the belt over the lap area and the shoulder (do not twist) and click into right-hand buckle.

To remove the seat belt, first press the button on the right-hand buckle and remove upper latch plate. Then press the button on the left-hand buckle and remove lower latch plate. The seat belt retracts automatically.

⚠ Warning

The seat belt will not be effective in the event of an accident if the lower latch plate is not correctly fitted.

When releasing the seat belt, ensure that the right-hand buckle is always released before the left-hand buckle.

Remove latch plates from the buckles before removing seats from the vehicle or to facilitate access to the rear seats.

Rear seats ⇨ 47.

Using the seat belt while pregnant

⚠ Warning

The lap belt must be positioned as low as possible across the pelvis to prevent pressure on the abdomen.

Airbag system

The airbag system consists of a number of individual systems depending on the scope of equipment.

When triggered the airbags inflate within milliseconds. They also deflate so quickly that it is often unnoticeable during the collision.

⚠ Warning

If handled improperly the airbag systems can be triggered in an explosive manner.

Note
The airbag systems and belt pretensioner control electronics are located in the centre console area. Do not put any magnetic objects in this area.

Do not affix any objects onto the airbag covers and do not cover them with other materials.

Each airbag is triggered only once. Have deployed airbags replaced by a workshop. Furthermore, it may be necessary to have the steering wheel, the instrument panel, parts of the panelling, the door seals, handles and the seats replaced.

Do not make any modifications to the airbag system as this will invalidate the vehicle type approval.

When the airbags inflate escaping hot gases may cause burns.

Control indicator for airbag systems ⇨ 85.

Child restraint systems on front passenger seat with airbag systems

Warning according to ECE R94.02:

EN: NEVER use a rear-facing child restraint system on a seat protected by an ACTIVE AIRBAG in front of it, DEATH or SERIOUS INJURY to the CHILD can occur.

DE: Nach hinten gerichtete Kindersitze NIEMALS auf einem Sitz verwenden, der durch einen davor befindlichen AKTIVEN AIRBAG geschützt ist, da dies den TOD oder SCHWERE VERLETZUNGEN DES KINDES zur Folge haben kann.

FR: NE JAMAIS utiliser un siège d'enfant orienté vers l'arrière sur un siège protégé par un COUSSIN GONFLABLE ACTIF placé devant lui, sous peine d'infliger des BLESSURES GRAVES, voire MORTELLES à l'ENFANT.

ES: NUNCA utilice un sistema de retención infantil orientado hacia atrás en un asiento protegido por un AIRBAG FRONTAL ACTIVO. Peligro de MUERTE o LESIONES GRAVES para el NIÑO.

RU: ЗАПРЕЩАЕТСЯ устанавливать детское удерживающее устройство лицом назад на сиденье автомобиля, оборудованном фронтальной подушкой безопасности, если ПОДУШКА НЕ ОТКЛЮЧЕНА! Это может привести к СМЕРТИ или СЕРЬЕЗНЫМ ТРАВМАМ РЕБЕНКА.

NL: Gebruik NOOIT een achterwaarts gericht kinderzitje op een stoel met een ACTIEVE AIRBAG ervoor, om DODELIJK of ERNSTIG LETSEL van het KIND te voorkomen.

DA: Brug ALDRIG en bagudvendt autostol på et forsæde med AKTIV AIRBAG, BARNET kan komme i LIVSFARE eller komme ALVORLIGT TIL SKADE.

SV: Använd ALDRIG en bakåtvänd barnstol på ett säte som skyddas med en framförvarande AKTIV AIRBAG. DÖDSFALL eller ALLVARLIGA SKADOR kan drabba BARNET.

FI: ÄLÄ KOSKAAN sijoita taaksepäin suunnattua lasten turvaistuinta istuimelle, jonka edessä on AKTIIVINEN TURVATYYNY, LAPSI VOI KUOLLA tai VAMMAUTUA VAKAVASTI.

NO: Bakovervendt barnesikringsutstyr må ALDRI brukes på et sete med AKTIV KOLLISJONSPUTE foran, da det kan føre til at BARNET utsettes for LIVSFARE og fare for ALVORLIGE SKADER.

PT: NUNCA use um sistema de retenção para crianças voltado para trás num banco protegido com um AIRBAG ACTIVO na frente do mesmo, poderá ocorrer a PERDA DE VIDA ou FERIMENTOS GRAVES na CRIANÇA.

IT: Non usare mai un sistema di sicurezza per bambini rivolto all'indietro su un sedile protetto da AIRBAG ATTIVO di fronte ad esso: pericolo di MORTE o LESIONI GRAVI per il BAMBINO!

EL: ΠΟΤΕ μη χρησιμοποιείτε παιδικό κάθισμα ασφαλείας με φορά προς τα πίσω σε κάθισμα που προστατεύεται από μετωπικό ΕΝΕΡΓΟ ΑΕΡΟΣΑΚΟ, διότι το παιδί μπορεί να υποστεί ΘΑΝΑΣΙΜΟ ή ΣΟΒΑΡΟ ΤΡΑΥΜΑΤΙΣΜΟ.

PL: NIE WOLNO montować fotelika dziecięcego zwróconego tyłem do kierunku jazdy na fotelu, przed którym znajduje się WŁĄCZONA PODUSZKA POWIETRZNA. Niezastosowanie się do tego zalecenia może być przyczyną ŚMIERCI lub POWAŻNYCH OBRAŻEŃ u DZIECKA.

TR: Arkaya bakan bir çocuk emniyet sistemini KESİNLİKLE önünde bir AKTİF HAVA YASTIĞI ile korunmakta olan bir koltukta kullanmayınız. ÇOCUK ÖLEBİLİR veya AĞIR ŞEKİLDE YARALANABİLİR.

UK: НІКОЛИ не використовуйте систему безпеки для дітей, що встановлюється обличчям назад, на сидінні з УВІМКНЕНОЮ ПОДУШКОЮ БЕЗПЕКИ, інакше це може призвести до СМЕРТІ чи СЕРЙОЗНОГО ТРАВМУВАННЯ ДИТИНИ.

HU: SOHA ne használjon hátrafelé néző biztonsági gyerekülést előlről AKTÍV LÉGZSÁKKAL védett ülésen, mert a GYERMEK HALÁLÁT vagy KOMOLY SÉRÜLÉSÉT okozhatja.

HR: NIKADA nemojte koristiti sustav zadržavanja za djecu okrenut prema natrag na sjedalu s AKTIVNIM ZRAČNIM JASTUKOM ispred njega, to bi moglo dovesti do SMRTI ili OZBILJNJIH OZLJEDA za DIJETE.

SL: NIKOLI ne nameščajte otroškega varnostnega sedeža, obrnjenega v nasprotni smeri vožnje, na sedež z AKTIVNO ČELNO ZRAČNO

BLAZINO, saj pri tem obstaja nevarnost RESNIH ali SMRTNIH POŠKODB za OTROKA.

SR: NIKADA ne koristiti bezbednosni sistem za decu u kome su deca okrenuta unazad na sedištu sa AKTIVNIM VAZDUŠNIM JASTUKOM ispred sedišta zato što DETE može da NASTRADA ili da se TEŠKO POVREDI.

MK: НИКОГАШ не користете детско седиште свртено наназад на седиште заштитено со АКТИВНО ВОЗДУШНО ПЕРНИЧЕ пред него, затоа што детето може ДА ЗАГИНЕ или да биде ТЕШКО ПОВРЕДЕНО.

BG: НИКОГА не използвайте детска седалка, гледаща назад, върху седалка, която е защитена чрез АКТИВНА ВЪЗДУШНА ВЪЗГЛАВНИЦА пред нея - може да се стигне до СМЪРТ или СЕРИОЗНО НАРАНЯВАНЕ на ДЕТЕТО.

RO: Nu utilizați NICIODATĂ un scaun pentru copil îndreptat spre partea din spate a mașinii pe un scaun protejat de un AIRBAG ACTIV în fața sa; acest lucru poate duce la DECESUL sau VĂTĂMAREA GRAVĂ a COPILULUI.

CS: NIKDY nepoužívejte dětský zádržný systém instalovaný proti směru jízdy na sedadle, které je chráněno před sedadlem AKTIVNÍM AIRBAGEM. Mohlo by dojít k VÁŽNÉMU PORANĚNÍ nebo ÚMRTÍ DÍTĚTE.

SK: NIKDY nepoužívajte detskú sedačku otočenú vzad na sedadle chránenom AKTÍVNYM AIRBAGOM, pretože môže dôjsť k SMRTI alebo VÁŽNYM ZRANENIAM DIEŤAŤA.

LT: JOKIU BŪDU nemontuokite atgal atgręžtos vaiko tvirtinimo sistemos sėdynėje, prieš kurią įrengta AKTYVI ORO PAGALVĖ, nes VAIKAS GALI ŽŪTI arba RIMTAI SUSIŽALOTI.

LV: NEKĀDĀ GADĪJUMĀ neizmantojiet uz aizmuguri vērstu bērnu sēdeklīti sēdvietā, kas tiek aizsargāta ar tās priekšā uzstādītu AKTĪVU DROŠĪBAS SPILVENU, jo pretējā gadījumā BĒRNS var gūt SMAGAS TRAUMAS vai IET BOJĀ.

ET: ÄRGE kasutage tahapoole suunatud lapseturvaistet istmel, mille ees on AKTIIVSE TURVAPADJAGA kaitstud iste, sest see võib põhjustada LAPSE SURMA või TÕSISE VIGASTUSE.

Beyond the warning required by ECE R94.02, for safety reasons a forward-facing child restraint system must only be used subject to the instructions and restrictions in the Child restraint installation locations tables ⇨ 61.

The airbag label is located on the front passenger sun visor.

⚠ Danger

Do not use a child restraint system on the passenger seat with active front airbag.

Airbag deactivation ⇨ 58.

Front airbag system

The front airbag system consists of one airbag in the steering wheel and one in the instrument panel on the front passenger side. These can be identified by the word **AIRBAG**.

Additionally, depending on vehicle, there is a warning label on the side of the instrument panel (visible when the door is open), on the sun visor, or on the lower part of the windscreen.

The front airbag system is triggered in the event of an accident of a certain severity. The ignition must be switched on.

The inflated airbags cushion the impact, thereby reducing the risk of injury to the upper body and head of the front seat occupants considerably.

⚠ Warning

Optimum protection is only provided when the seat is in the proper position.

Seat position ⇨ 44.

Keep the area in which the airbag inflates clear of obstructions.

Fit the seat belt correctly and engage securely. Only then is the airbag able to protect.

Side airbag system

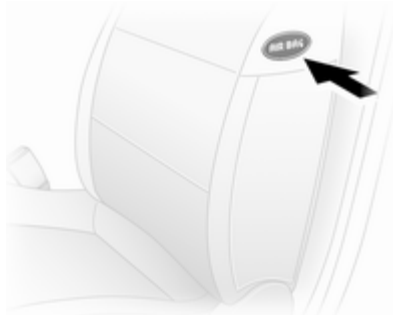

The side airbag system consists of an airbag in each front seat backrest. This may be identified by the word **AIRBAG**.

The side airbag system is triggered in the event of an accident of a certain severity. The ignition must be switched on.

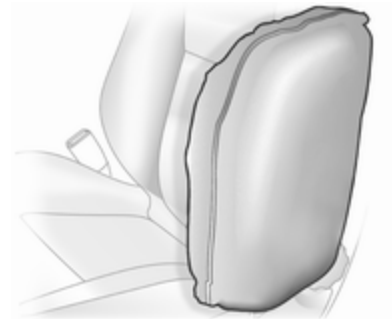

The inflated airbags cushion the impact, thereby reducing the risk of injury to the upper body and pelvis in the event of a side-on collision considerably.

⚠ Warning

Keep the area in which the airbag inflates clear of obstructions.

Note
Only use protective seat covers that have been approved for the vehicle. Be careful not to cover the airbags.

Curtain airbag system

The curtain airbag system consists of an airbag in the roof frame on each side. This may be identified by the word **AIRBAG** on the headlining trim.

The curtain airbag system is triggered in the event of a side-on impact of a certain severity. The ignition must be switched on.

The inflated airbags cushion the impact, thereby reducing the risk of injury to the head in the event of a side-on impact considerably.

⚠ Warning
Keep the area in which the airbag inflates clear of obstructions.

Airbag deactivation

The front passenger airbag system must be deactivated if a child restraint is to be fitted on the front passenger seat in accordance with the instructions in the Child restraint installation locations tables ⇨ 61.

The belt tensioners and all other airbag systems will remain active.

The airbag deactivation system may be indicated by a label on the side of the instrument panel, visible when the front passenger door is open.

Front passenger airbag system can be deactivated via a switch located on the side of the instrument panel. Open the front passenger door to access the switch.

Press the switch in and rotate to choose the position:

OFF = front passenger seat airbag system is deactivated and will not inflate in the event of a collision. Control indicator OFF illuminates continuously in the roof console ⇨ 83, ⇨ 85 and a corresponding message appears in the Driver Information Centre ⇨ 90.

ON = front passenger airbag system is active.

⚠ Danger

Risk of fatal injury for a child using a child restraint system together with activated front passenger airbag.

Risk of fatal injury for an adult person with deactivated front passenger airbag.

If control indicator ON illuminates after the ignition is switched on and control indicator OFF is not illuminated, the front passenger airbag system will inflate in the event of a collision.

If both control indicators ON and OFF are illuminated simultaneously, there is a system failure. The status of the system is not discernible, therefore no person is permitted to occupy the front passenger seat. Contact a workshop immediately.

If control indicator ⇨ 86 illuminates together with ⇨ 85, this indicates a fault within the system. The switch position may have been changed inadvertently with the ignition on. Turn ignition off and on again and reset the switch position. If and still remain illuminated, seek the assistance of a workshop.

Change status only when the vehicle is stopped with the ignition off. Status remains until the next change.

Control indicator for airbag deactivation ⇨ 85.

Child restraints

Child restraint systems

We recommend the Opel child restraint system which is tailored specifically to the vehicle.

When a child restraint system is being used, pay attention to the following usage and installation instructions and also those supplied with the child restraint system.

Always comply with local or national regulations. In some countries, the use of child restraint systems is forbidden on certain seats.

⚠ Danger

If using a rear-facing child restraint system on the front passenger seat, the airbag system for the front passenger seat must be deactivated. This also applies to certain forward-facing child restraint systems as indicated in the table ⇨ 61.

Airbag deactivation ⇨ 58.

Airbag label ⇨ 53.

Selecting the right system

The rear seats are the most convenient location to fasten a child restraint system.

Children should travel facing rearwards in the vehicle as long as possible. This makes sure that the child's backbone, which is still very weak, is under less strain in the event of an accident.

Suitable are restraint systems that comply with valid UN ECE regulations. Check local laws and regulations for mandatory use of child restraint systems.

Ensure that the child restraint system to be installed is compatible with the vehicle type.

Ensure that the mounting location of the child restraint system within the vehicle is correct, see following tables.

Allow children to enter and exit the vehicle only on the side facing away from the traffic.

When the child restraint system is not in use, secure the seat with a seat belt or remove it from the vehicle.

Note

Do not affix anything on the child restraint systems and do not cover them with any other materials.

A child restraint system which has been subjected to stress in an accident must be replaced.

Child restraint installation locations

Permissible options for fitting a child restraint system

Front seats - Van

	Single front passenger seat[1]		Double front passenger seat		
				deactivated or without airbag	
Weight and age class	activated airbag	deactivated or without airbag	activated airbag	centre	outer
Group 0: up to 10 kg or approx. 10 months **Group 0+: up to 13 kg** or approx. 2 years	X	U	X	X	U
Group I: 9 to 18 kg or approx. 8 months to 4 years	X	U	X	X	U
Group II: 15 to 25 kg or approx. 3 to 7 years **Group III: 22 to 36 kg** or approx. 6 to 12 years	X	U	X	X	U

[1] = Forward-facing child restraints: Remove head restraint ⇨ 43. Slide seat as far back as possible. Set seat height to highest position. Maximum backrest rake is 25°. Seat adjustment ⇨ 45.

Front seats - Combi, Bus, Double cab

	Single front passenger seat[1]		Double front passenger seat		
				deactivated or without airbag	
Weight and age class	activated airbag	deactivated or without airbag	activated airbag	centre	outer
Group 0: up to 10 kg or approx. 10 months **Group 0+: up to 13 kg** or approx. 2 years	X	U	X	X	U
Group I: 9 to 18 kg or approx. 8 months to 4 years	X	U[2]	X	X	U[2]
Group II: 15 to 25 kg or approx. 3 to 7 years **Group III: 22 to 36 kg** or approx. 6 to 12 years	X	X	X	X	X

[1] = If adjustable, slide seat as far back as possible and set seat height to highest position. Maximum backrest rake is 25°. Seat adjustment ⇨ 45.
[2] = Rear-facing child restraints only for this weight and age class.

Rear seats - Combi, Bus, Double cab

Weight and age class	2nd row seats[1]	3rd row seats
Group 0: up to 10 kg or approx. 10 months **Group 0+: up to 13 kg** or approx. 2 years	U	U
Group I: 9 to 18 kg or approx. 8 months to 4 years	U[2]	U[2]
Group II: 15 to 25 kg or approx. 3 to 7 years **Group III: 22 to 36 kg** or approx. 6 to 12 years	U[2]	U[2]

[1] = If necessary, slide adjustable front seat forwards to install a child restraint system on these seats. There may not be enough clearance to install particular child restraint systems on vehicles fitted with fixed front seats.
[2] = Forward-facing child restraints: Remove head restraint ⇨ 43 before installing child restraint. The seat in front of this installation position must not be more than halfway back on its runners. Maximum backrest rake is 25°. Seat adjustment ⇨ 45.

U = Suitable for universal category restraint systems for use in this weight and age class, in conjunction with three-point seat belt.
X = Seat position not suitable for children in this weight and age class.

Permissible options for fitting an ISOFIX child restraint system

Weight class	Size class	Fixture	Front seats	2nd row seats[1] Centre	2nd row seats[1] Outer: vehicles with single passenger seat	2nd row seats[1] Outer: vehicles with double passenger seat	3rd row seats
Group 0: up to 10 kg or approx. 10 months	E	ISO/R1	X	X	IL	IL	X
Group 0+: up to 13 kg or approx. 2 years	E	ISO/R1	X	X	IL	IL	X
	D	ISO/R2	X	X	IL	X	X
	C	ISO/R3	X	X	IL	X	X
Group I: 9 to 18 kg or approx. 8 months to 4 years	D	ISO/R2	X	X	IL	X	X
	C	ISO/R3	X	X	IL	X	X
	B	ISO/F2	X	X	IL, IUF[2]	IL, IUF[2]	X
	B1	ISO/F2X	X	X	IL, IUF[2]	IL, IUF[2]	X
	A	ISO/F3	X	X	IL, IUF[2]	IL, IUF[2]	X
Group II: 15 to 25 kg or approx. 3 to 7 years			X	X	IL, IUF[2]	IL, IUF[2]	X
Group III: 22 to 36 kg or approx. 6 to 12 years			X	X	IL, IUF[2]	IL, IUF[2]	X

[1] = If necessary, slide adjustable front seat forwards to install a child restraint system on these seats. There may not be enough clearance to install a child restraint system on vehicles fitted with fixed front seats.
[2] = Forward-facing child restraints: Remove head restraint ⇨ 43 before installing child restraint. The seat in front of this installation position must not be more than halfway back on its runners. Maximum backrest rake is 25°. Seat adjustment ⇨ 45.

IUF = Suitable for ISOFIX forward-facing child restraint systems of universal category approved for use in this weight class.
X = No ISOFIX child restraint system approved in this weight class.
IL = Suitable for particular ISOFIX restraint systems of the 'specific-vehicle', 'restricted' or 'semi-universal' categories. The ISOFIX restraint system must be approved for the specific vehicle type.

ISOFIX size class and seat device

A - ISO/F3 = Forward-facing child restraint system for children of maximum size in the weight class 9 to 18 kg.
B - ISO/F2 = Forward-facing child restraint system for smaller children in the weight class 9 to 18 kg.
B1 - ISO/F2X = Forward-facing child restraint system for smaller children in the weight class 9 to 18 kg.
C - ISO/R3 = Rear-facing child restraint system for children of maximum size in the weight class up to 18 kg.
D - ISO/R2 = Rear-facing child restraint system for smaller children in the weight class up to 18 kg.
E - ISO/R1 = Rear-facing child restraint system for young children in the weight class up to 13 kg.

Isofix child restraint systems

ISOFIX mounting brackets are indicated by the ISOFIX logo or symbol on the seat cushion.

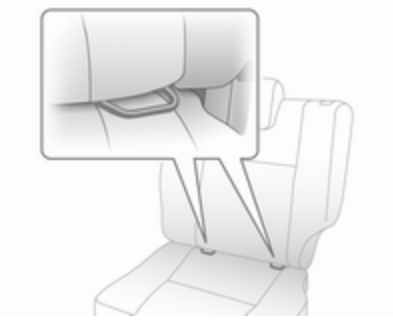

Fasten vehicle-approved ISOFIX child restraint systems to the ISOFIX mounting brackets.

When using ISOFIX mounting brackets for seat mounting, universally approved child restraint systems for ISOFIX may be used.

Permissible mounting location positions for ISOFIX child restraint systems are marked in the tables by +, IL and IUF.

Top-tether fastening eyes

Top-Tether fastening eyes are located on the back of the seat.

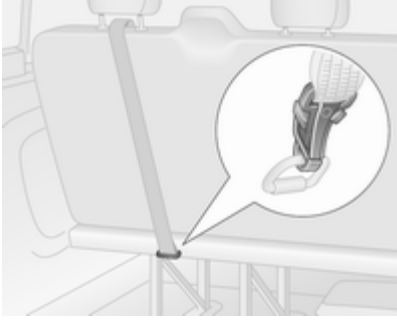

In addition to the ISOFIX mounting, fasten the Top-Tether strap to the Top-Tether fastening eyes. The strap must run between the two guide rods of the head restraint.

ISOFIX child restraint systems of universal category positions are marked in the table by IUF.

Storage

Storage compartments 67
Load compartment 70
Roof rack system 73
Loading information 73

Storage compartments

⚠ Warning

Do not store heavy or sharp objects in the storage compartments. Otherwise vehicle occupants could be injured by objects being thrown around in the event of hard braking, a sudden change in direction or an accident.

Instrument panel storage

Storage compartments, pockets and trays are located in the instrument panel.

A coin holder, a phone holder, and a tablet holder may be located on the instrument panel.

The tray located on top of the instrument panel has a lid.

Glovebox

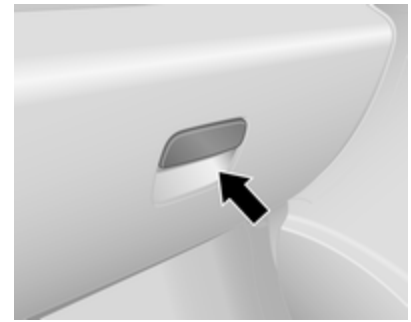

To open, pull the handle.

Depending on version, the glovebox may feature a light that comes on when the glovebox is opened, and may also be lockable.

The glovebox should be closed while driving.

Cupholders

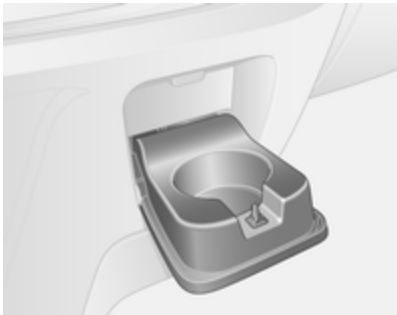

Cupholders are located at both ends of the instrument panel, centrally in the lower instrument panel and in the rear seat area.

Additional cupholders are located on the back of the folded down centre rear seat ⇨ 68, ⇨ 47.

The cupholders can also be used to hold the portable ashtray unit ⇨ 80. Remove the portable ashtray unit to use the cupholders.

Front storage

Coat hooks are located on the cabin bulkhead and on the grab handles in the roof lining.

The front door pockets contain bottle holders.

Folding centre seatback

The centre seat backrest, when folded fully forwards, features a storage compartment, cupholder and a document tray.

Press button (arrowed) on rear side of backrest to unlock the document tray and access the storage compartments.

To install the document tray, insert the end piece(s) into any of the slots by the cupholder.

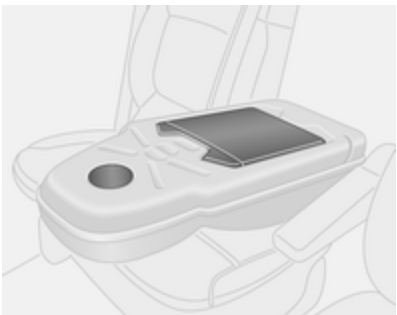

The document tray must always be returned to its original position before raising the seat backrest.

If necessary, secure objects with the strap.

When the storage compartment is closed, it is possible to run a charging cord from an item in the storage compartment through the notch, e.g. to connect devices to a power outlet.

Underseat storage

On some variants, a storage box is located under the front seat. Pull storage box to remove.

Bench seats may also contain a storage compartment at the lower front part of the seat.

Using the loops on the passenger seat cushion, pull the cushion forwards to gain access to the storage under the seat cushion.

Double cab

Loop is located at front of seat. Pull loop to release seat cushion, then lift the cushion upwards.

To replace; fold down seat cushion, push it slightly rearwards then press front part of cushion downwards to engage.

When folded down, pulling the loop also allows you to adjust the position of the seat cushion to suit personal requirements.

Seat adjustment ⇨ 45.

Load-through feature

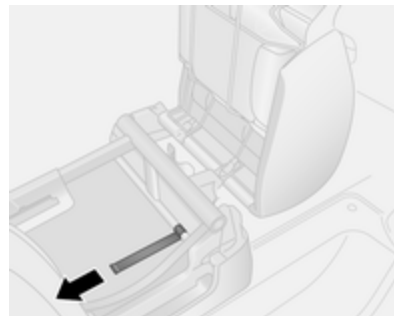

To enable long items to be stored under the rear seats (on the front passenger side of the vehicle only), the lower trim flaps can be released.

First pull the loop on the passenger seat cushion to raise the seat, then tilt front flap inwards by pulling the tab behind the seat (see illustration).

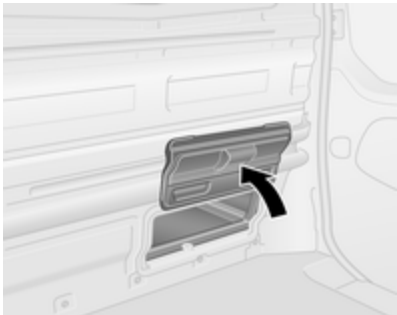

Fold up the rear flap by hand; it is retained in the open position by magnets.

⚠ Warning

Passengers must not use the seat when transporting objects beneath it with the lower trim flaps opened.

Overcab storage

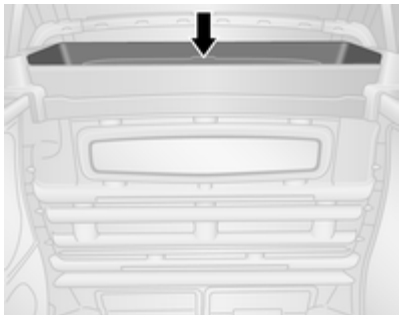

The total weight in this compartment must not exceed 35 kg.

Load compartment

Load compartment cover

Rear parcel shelf

Do not place any excessively heavy or sharp-edged objects on the rear parcel shelf.

The maximum load permissible is 50 kg.

⚠ Warning

Always make sure that the load in the vehicle is securely stowed. Otherwise objects can be thrown around inside the vehicle and cause personal injury or damage to the load or car.

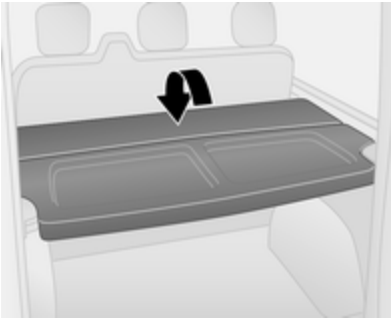

The rear parcel shelf can be installed in 2 positions, i.e. the upper position or the lower position.

The rear parcel shelf may also be folded up, allowing for greater flexibility in the load compartment.

Removing

To remove, release parcel shelf from its retainers on both sides.

If the rear seats ⇨ 47 are in the folded position, remove the parcel shelf and store it horizontally in front of the folded rear seats.

Installing

Refit the parcel shelf by engaging in the retainers on both sides.

Lashing eyes

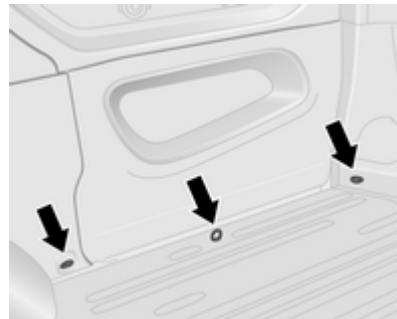

Lashing eyes are mounted in the load compartment to enable cargo to be secured against slippage using lashing straps or a luggage floor net.

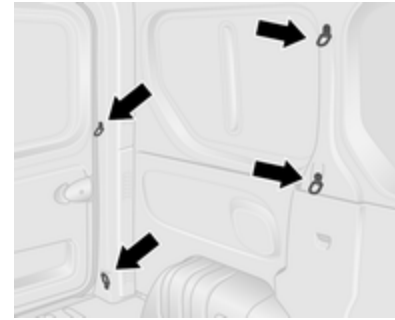

Lashing eyes may be located on the vehicle floor and/or in the sidewall. The number and location of the lashing eyes may vary depending on the vehicle.

The maximum force applied to the lashing eyes should not exceed 6250 N at 30°.

Safety net

The safety net can be installed behind the front seats or the rear seats.

Passengers must not be transported behind the safety net.

Installing

Release the covers in the roof lining (using a flat blade screwdriver) to access the mountings, then insert the load compartment net rods into the left and right mounting locations and secure.

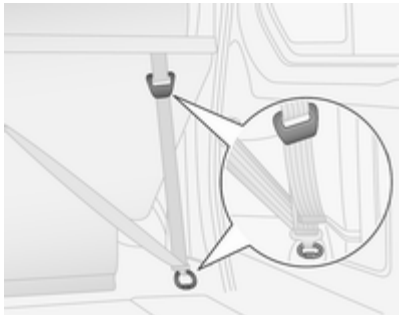

Attach the straps to the lashing eyes or rings behind the seats, then tension the straps.

Removal

Release tension from straps and unhook straps from lashing eyes or rings. Remove net rods from their mounting locations and close the covers.

Warning triangle

The warning triangle can be accommodated in the space under the seats.

Underseat storage ⇨ 69.

First aid kit

The first aid kit can be accommodated in the space under the seats.

Underseat storage ⇨ 69.

Roof rack system

Roof rack

For safety reasons and to avoid damage to the roof, the vehicle approved roof rack system is recommended.

Follow the installation instructions and remove the roof rack when not in use.

Further information ⇨ 73.

Loading information

- Heavy objects in the load compartment should be evenly distributed and placed as far forward as possible. If objects can be stacked, the heavier objects should be placed at the bottom.
- Secure objects with lashing straps attached to lashing eyes ⇨ 71.
- Secure loose objects in load compartment to prevent sliding.
- When transporting objects in the load compartment, the backrests of the rear seats must not be angled forward.
- Do not allow the load to protrude above the upper edge of the backrests.
- Do not place any objects on the instrument panel.
- The load must not obstruct the operation of the pedals, parking brake and gear selector, or hinder the freedom of movement of the driver. Do not place any unsecured objects in the interior.
- Do not drive with an open load compartment. In addition, the number plate is only distinguishable and illuminated correctly if the doors are closed.

⚠ Warning

Always make sure that the load in the vehicle is securely stowed. Otherwise objects can be thrown around inside the vehicle and cause personal injury or damage to the load or car.

- The payload is the difference between the permitted gross vehicle weight (see identification plate ⇨ 179) and the EC kerb weight.

  To calculate the payload, enter the data for your vehicle in the Weights table at the front of this manual.

  The EC kerb weight includes weights for the driver (68 kg), luggage (7 kg) and all fluids (tank 90 % full).

Optional equipment and accessories increase the kerb weight.

- Driving with a roof load increases the sensitivity of the vehicle to cross-winds and has a detrimental effect on vehicle handling due to the vehicle's higher centre of gravity. Distribute the load evenly and secure it properly with retaining straps. Adjust the tyre pressure and vehicle speed according to the load conditions. Check and retighten the straps frequently.

  Do not drive faster than 120 km/h.

  The permissible roof load is 200 kg for H1 roof variants and 150 kg for H2 roof variants (excludes Platform cab conversions). The roof load is the combined weight of the roof rack and the load.

Instruments and controls

Controls 75
Warning lights, gauges and indicators 80
Information displays 90
Vehicle messages 91
Trip computer 92
Tachograph 94

Controls

Steering wheel adjustment

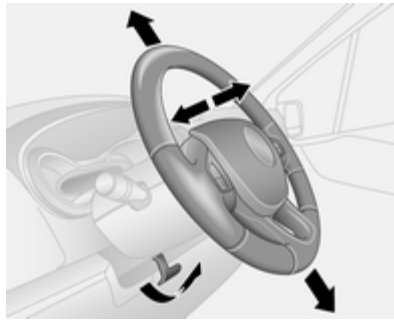

Unlock lever, adjust steering wheel, then engage lever and ensure it is fully locked.

Do not adjust steering wheel unless vehicle is stationary and steering wheel lock has been released.

Steering wheel controls

The cruise control and speed limiter can be operated via the controls on the steering wheel.

Cruise control and speed limiter ⇨ 126.

Horn

Press 🔈.

The horn will sound regardless of ignition switch position.

Steering column controls

The Infotainment system can be also operated via the controls on the steering column.

Further information is available in the Infotainment system manual.

Windscreen wiper/washer

Windscreen wiper

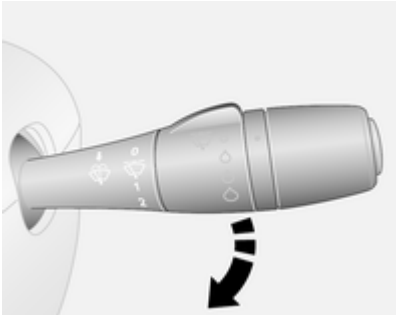

0 = off
⊘ = interval wiping or automatic wiping with rain sensor
1 = slow
2 = fast

Do not use if the windscreen is frozen.

Switch off in car washes.

Adjustable wiper interval

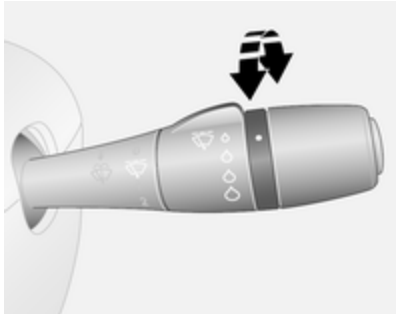

Wiper lever in position ⊘.

Turn the adjuster wheel to adjust the desired wipe interval:

short interval = turn adjuster wheel upwards
long interval = turn adjuster wheel downwards

Automatic wiping with rain sensor

Wiper lever in position ⊘.

The rain sensor detects the amount of water on the windscreen and automatically regulates the frequency of the windscreen wiper.

Automatic wiping will need to be reselected whenever the ignition has been switched off.

Adjustable sensitivity of the rain sensor

Turn the adjuster wheel to adjust the sensitivity:

low sensitivity = turn adjuster wheel upwards
high sensitivity = turn adjuster wheel downwards

The rain sensor is located on the windscreen. Keep the sensor free from dust, dirt and ice.

Windscreen washer

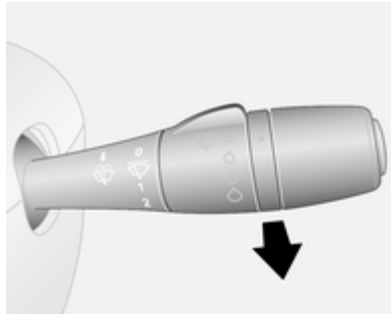

Pull lever. Washer fluid is sprayed onto the windscreen.

short pull = wiper swipes once
long pull = wiper swipes for a few strokes

Rear window wiper/washer

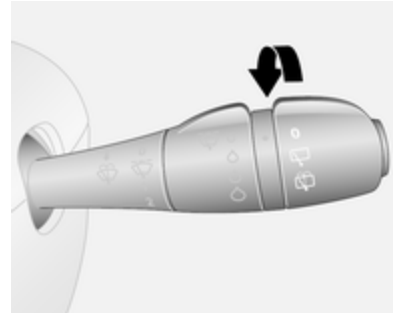

Turn lever:

0 = off
= wiper operation
= washer fluid is sprayed onto the rear window

The rear window wiper comes on automatically when the windscreen wiper is switched on and reverse gear is engaged.

Outside temperature

A drop in temperature is indicated immediately and a rise in temperature after a time delay.

If outside temperatures drop to 3 °C, the **°C** flashes in the Driver Information Centre as a warning for icy road conditions. This will continue to flash until temperatures rise above 3 °C.

⚠Warning

The road surface may already be icy even though the display indicates a few degrees above 0 °C.

Clock

Depending on vehicle, the current time may appear in the central information display and/or the Driver Information Centre.

Info-display:

Hours and minutes can be adjusted by pressing the appropriate buttons by the display or with the Infotainment system controls.

For further information, refer to the Infotainment system manual.

Driver Information Centre:

Display the clock setting function by pressing the button repeatedly on the end of the wiper lever.

Press and hold the button for approx. 5 seconds:

- Hours flash
- Press button repeatedly to change hours
- Wait for approx. 5 seconds to set hours
- Minutes flash
- Press button repeatedly to change minutes
- Wait for approx. 5 seconds to set minutes.

Driver Information Centre ⇨ 90.

Power outlets

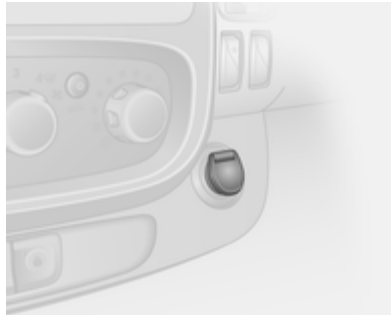

12 V power outlets are located on the instrument panel and in the rear of the vehicle.

Connecting electrical accessories while the engine is off will discharge the vehicle battery. Do not exceed the maximum power consumption of 120 Watts. Do not connect any current-delivering accessories, e.g. electrical charging devices or batteries.

Electrical accessories that are connected must comply with the electromagnetic compatibility requirements laid down in DIN VDE 40 839.

Caution

Do not connect any current-delivering accessories, e.g. electrical charging devices or batteries.

Do not damage the sockets by using unsuitable plugs.

Cigarette lighter

The cigarette lighter is located on the instrument panel.

Press in cigarette lighter. It switches off automatically once the element is glowing. Pull out lighter.

Ashtrays

Caution
To be used only for ash and not for combustible rubbish.

Portable ashtray

Ashtray container for mobile use in the vehicle. To use, open cover.

Ashtrays can be placed in the cupholders at both ends of the instrument panel, centrally in the lower instrument panel and in the rear seat area.

Cupholders ⇨ 68.

Warning lights, gauges and indicators

Instrument cluster

In some versions, the needles of the instruments briefly rotate to the end position when the ignition is switched on.

Speedometer

Indicates vehicle speed.

Speed limiter

Maximum speed may be restricted by a speed limiter. As a visible indication of this, a warning label is located on the instrument panel.

A warning buzzer will sound for 10 seconds every 40 seconds if the vehicle briefly exceeds the set limit.

Note
Under certain conditions (e.g. steep inclines), the vehicle speed may exceed the set limit.

Speed limiter ⇨ 130, cruise control speed limiter ⇨ 126.

Odometer

Displays the recorded distance.

Trip odometer

The trip odometer appears below the odometer in the Driver Information Centre and displays the distance travelled since the last reset.

To reset, with the trip odometer displayed, press and hold button on end of wiper lever for a few seconds with the ignition on. The display will flash and the value will reset to zero.

Driver Information Centre ⇨ 90.

Tachometer

Displays the engine speed.

Drive in a low engine speed range for each gear as much as possible.

Caution
If the needle is in the yellow warning zone, the maximum permitted engine speed is exceeded. Engine at risk.

Fuel gauge

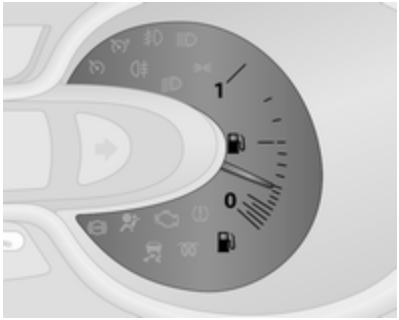

Displays fuel level in the tank.

Control indicator ⛽ also illuminates in instrument cluster ⇨ 83 when fuel level is low (range of approx. 50 km): refuel immediately ⇨ 134.

Never run the tank dry.

Diesel fuel system, bleeding ⇨ 146.

Note
To ensure the fuel level is displayed correctly, the ignition must be switched off before refuelling. Avoid minor fuel top-ups (e.g. less than 5 litres) to ensure accurate readings.

Because of the fuel remaining in the tank, the top-up quantity may be less than the specified tank capacity.

Fuel economy gauge

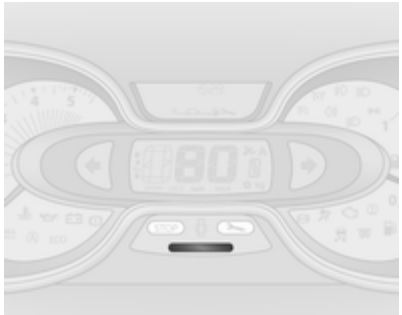

The fuel economy gauge provides an instantaneous calculation of fuel efficiency based on current driving style.

The gauge uses colours to indicate current fuel efficiency:

Green	= best fuel economy is being achieved
Yellow	= driving style too aggressive
Orange	= least efficient fuel economy

The fuel economy gauge is enabled by default. It can be disabled via the Infotainment system. Refer to Infotainment system manual for further information.

Service display

When the ignition is switched on, the remaining distance before the next service is due may be shown briefly in the Driver Information Centre. Based on driving conditions, the interval at which a service will be indicated can vary considerably.

The distance before service display can also be shown by pressing button on end of wiper lever for approx. 5 seconds.

When the remaining distance before the next service is less than 1500 km or 1 month, a message appears in the Driver Information Centre.

When the distance reaches 0 km or the service date is due, control indicator 🔧 illuminates in the instrument cluster and the Driver Information Centre respectively, and a corresponding message appears in the Driver Information Centre.

The vehicle needs a service. Seek the assistance of a workshop.

Resetting the service display

After a service, the service display must be reset:

Select the distance before service display in the Driver Information Centre, then press and hold button on end of wiper lever for approx. 10 seconds.

Trip computer ⇨ 92.

Driver Information Centre ⇨ 90.

Service information ⇨ 174.

Control indicators

The control indicators described are not present in all vehicles. The description applies to all instrument versions.

Depending on the equipment the position of the control indicators may vary.

When the ignition is switched on, most control indicators will illuminate briefly as a functionality test.

The control indicator colours mean:

red = danger, important reminder
yellow = warning, information, fault
green = confirmation of activation
blue = confirmation of activation
white = confirmation of activation

Control indicators in the instrument cluster

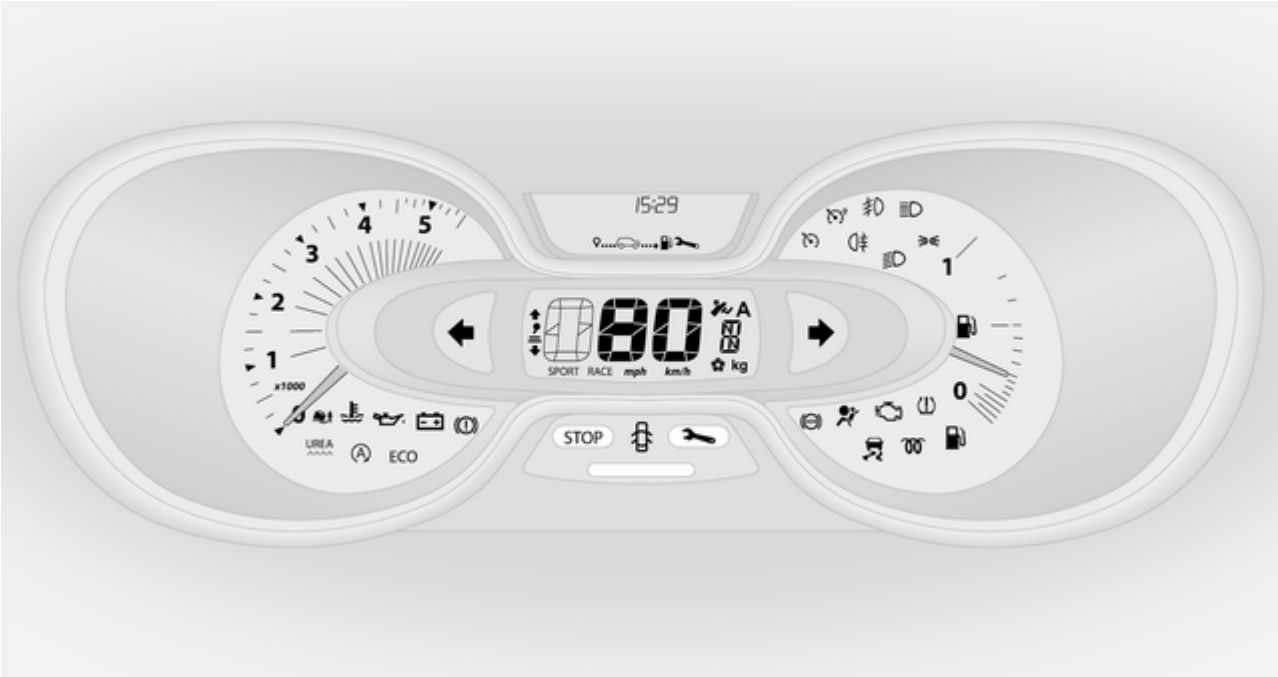

Control indicators in the roof console

Turn signal

⇦⇨ flashes green.

Flashes if a turn signal or the hazard warning flashers are activated.

Rapid flashing: failure of a turn signal light or associated fuse.

An audible warning can be heard when the turn signals are on.

Bulb replacement ⇨ 147.

Fuses ⇨ 152.

Turn signals ⇨ 97.

Seat belt reminder

illuminates in red.

If the seat belt is not fastened, control indicator will flash when vehicle speed exceeds approx. 16 km/h. A warning chime also sounds for upto 2 minutes.

⚠Warning

Fasten seat belt before each trip.

In the event of an accident, people not wearing seat belts endanger their fellow occupants and themselves.

Note

Heavy objects on the front seats may cause control indicator to illuminate. Remove the object from the seat or fasten the seat belt.

Airbag and belt tensioners

illuminates yellow.

When the ignition is switched on, the control indicator illuminates briefly. If it does not illuminate or illuminates whilst driving, there is a fault in the belt tensioner or the airbag system. The airbags and belt tensioners may fail to trigger in the event of an accident.

Deployment of the belt tensioners or airbags is indicated by continuous illumination of .

⚠Warning

Have the cause of the fault remedied immediately by a workshop.

Belt tensioners, airbag system ⇨ 50, ⇨ 53.

Airbag deactivation

ON illuminates yellow.

The front passenger airbag is activated.

OFF illuminates yellow.

The front passenger airbag is deactivated ⇨ 58.

If both control indicators ON and OFF are illuminated simultaneously, there is a system failure. The status of the system is not discernible, therefore no person is permitted to occupy the front passenger seat. Contact a workshop immediately.

If illuminated in conjunction with or , seek the assistance of a workshop.

⚠ Danger

Risk of fatal injury for a child using a child restraint system together with activated front passenger airbag.

Risk of fatal injury for an adult person with deactivated front passenger airbag.

Airbag system ⇨ 53, belt tensioners ⇨ 50, airbag deactivation ⇨ 58.

Charging system

illuminates red.

Illuminates briefly when the ignition is switched on.

Illuminates when the engine is running

If control indicator illuminates when the engine is running (together with control indicator STOP and a warning chime): Stop, switch off engine.

Vehicle battery is not charging. Engine cooling may be interrupted. Power to the brake servo unit may be cut. Seek the assistance of a workshop.

Malfunction indicator light

illuminates or flashes yellow.

Illuminates briefly when the ignition is switched on.

Illuminates when the engine is running

Fault in the emission control system. The permitted emission limits may be exceeded. Seek the assistance of a workshop immediately.

Flashes when the engine is running

Fault that could lead to catalytic converter damage. Ease up on the accelerator until the flashing stops. Seek the immediate assistance of a workshop.

Service vehicle soon

illuminates in yellow.

Illuminates when the ignition is switched on and goes out shortly after the engine starts.

May illuminate together with other control indicators and a corresponding message in the Driver Information Centre. Seek the assistance of a workshop immediately.

Stop engine

STOP illuminates in red.

Illuminates when the ignition is switched on and goes out shortly after the engine starts.

Illuminates together with other control indicators (e.g., , and), accompanied by a warning chime and a corresponding message in the Driver Information Centre: stop engine immediately and seek the assistance of a workshop.

Brake system

illuminates red.

Illuminates when the parking brake is released if the brake fluid level is too low ⇨ 143.

⚠ Warning
Stop. Do not continue your journey. Consult a workshop.

Illuminates after the ignition is switched on if the parking brake is applied ⇨ 123 and extinguishes when the parking brake is released.

If illuminates together with control indicator STOP and a warning chime, there is a fault in the braking system. A corresponding message also appears in the Driver Information Centre ⇨ 90. Seek the assistance of a workshop immediately.

Brake system ⇨ 122.

Antilock brake system (ABS)

ABS illuminates yellow.

Illuminates briefly after the ignition is switched on. The system is ready for operation when ABS goes out.

If control indicator ABS does not go out after a few seconds, or if it illuminates while driving, there is a fault in the ABS. Control indicator may also illuminate in the instrument cluster together a corresponding message in the Driver Information Centre. The brake system remains operational but without ABS regulation.

If control indicators ABS, , and STOP illuminate, there is a fault in the braking system. A corresponding message appears in the Driver Information Centre ⇨ 90. Seek the assistance of a workshop immediately.

Antilock brake system ⇨ 122.

Upshift

or illuminates.

It is recommended to shift gear when illuminated to improve fuel economy.

Electronic Stability Program

flashes or illuminates yellow.

Illuminates briefly when the ignition is switched on.

Flashing during driving

The system is actively engaged. Engine output may be reduced and the vehicle may be braked automatically to a small degree.

Illuminates while driving

The system is not available. A corresponding message also appears in the Driver Information Centre.

ESP®Plus ⇨ 125, Traction Control system ⇨ 124.

Electronic Stability Program off

illuminates yellow.

If ESP®Plus has been deactivated with button on the instrument panel, control indicator illuminates and a corresponding message appears in the Driver Information Centre ⇨ 90.

ESP®Plus ⇨ 125, Traction Control system ⇨ 124.

Engine coolant temperature

illuminates blue or red.

Illuminates red briefly when the ignition is switched on, then turns blue.

Illuminates red when the engine is running

Stop, switch off engine.

Caution
Coolant temperature too high.

Check coolant level ⇨ 142.

If there is sufficient coolant, consult a workshop.

The control indicator must be blue before continuing driving.

Preheating

illuminates yellow.

Preheating is activated. Only activates when outside temperature is low.

Tyre pressure monitoring system

illuminates or flashes.

Illuminates

Tyre pressure loss. Stop immediately and check tyre pressure.

Flashes

Fault in system or tyre without pressure sensor mounted (e.g. spare wheel). After a delay the control indicator illuminates continuously. Consult a workshop.

Tyre pressure monitoring system ⇨ 158.

Engine oil pressure

illuminates red.

Illuminates briefly when the ignition is switched on.

Illuminates when the engine is running

If control indicator illuminates when the engine is running (together with control indicator STOP and a warning chime): Stop, switch off engine.

Caution
Engine lubrication may be interrupted. This may result in damage to the engine and/or locking of the drive wheels.

1. Depress clutch.
2. Select neutral gear (or move selector lever to **N**).

3. Move out of the flow of traffic as quickly as possible without impeding other vehicles.
4. Switch off ignition.

⚠ Warning

When the engine is off, considerably more force is needed to brake and steer.

Do not remove key until vehicle is stationary, otherwise the steering wheel lock could engage unexpectedly.

Check oil level before seeking assistance of a workshop ⇨ 140.

Fuel economy mode

ECO illuminates green when ECO mode is engaged to reduce fuel consumption.

ECO mode, driving economically ⇨ 112.

Low fuel

illuminates yellow.

When the ignition is switched on, the control indicator illuminates briefly.

Illuminates when level in fuel tank is low (range of approx. 50 km); refuel immediately ⇨ 134.

Catalytic converter ⇨ 120.

Bleeding the diesel fuel system ⇨ 146.

Autostop

Ⓐ illuminates when engine is in an Autostop.

Stop-start system ⇨ 117.

Exterior light

illuminates green.

Illuminated when the headlights are on.

illuminates green.

Illuminated when the sidelights are on.

Lighting ⇨ 95.

High beam

illuminates blue.

Illuminated when high beam is on and during headlight flash ⇨ 96.

Fog light

illuminates green.

Illuminated when the front fog lights are on ⇨ 98.

Rear fog light

illuminates green.

Illuminated when the rear fog light is on ⇨ 98.

Cruise control

, illuminates green or yellow.

illuminates green when a certain speed is stored.

illuminates green when the system is on.

Speed limiter

illuminates yellow.

illuminates yellow when the system is on.

Cruise control and speed limiter ⇨ 126.

Door open

illuminates red.

Illuminates when a door is not fully closed.

A corresponding message also appears in the Driver Information Centre.

Information displays

Driver Information Centre

Depending on vehicle configuration, the following items appear in the display:

- Outside temperature ⇨ 78
- Clock ⇨ 78
- Odometer ⇨ 81
- Trip odometer ⇨ 81
- Service display ⇨ 82
- Vehicle messages ⇨ 91
- Trip computer ⇨ 92

Info-display

The central display in the Infotainment system displays the time and Infotainment system information.

For further information, refer to the Infotainment system manual.

Vehicle messages

Messages are displayed in the Driver Information Centre and may be accompanied by illumination of control indicator 🔧 or STOP in the instrument cluster.

Information messages

Information messages regarding, e.g. engine starting conditions, stop-start system, parking brake application, central locking, steering wheel lock etc. provide the current status of certain vehicle functions and instructions for use.

Fault messages

Fault messages regarding, e.g. fuel filter, airbags, exhaust emissions etc. are displayed together with control indicator 🔧. Drive with caution and seek the assistance of a workshop as soon as possible.

To remove fault messages from the display, press button on end of wiper lever. After a few seconds the message may disappear automatically and 🔧 remains illuminated. The fault will then be stored in the on board system.

Warning messages

Warning messages regarding, e.g. engine, battery or brake system failure, are displayed together with control indicator STOP and may be accompanied by a warning chime. Stop engine immediately and seek the assistance of a workshop.

Fuel economy messages

Fuel economy messages provide tips to improve fuel efficiency. Journeys can be saved in the system memory, enabling you to compare performances.

Refer to Infotainment system manual for further information.

Fuel economy rating ⇨ 92.

Warning chimes

A corresponding message may also appear in the Driver Information Centre when a warning chime is sounded.

When starting the engine or whilst driving:

- If seat belt is not fastened ⇨ 50.
- During operation of the turn and lane-change signals ⇨ 97.
- During illumination of certain control indicators.
- If the parking assist detects an object ⇨ 130.
- If the vehicle speed briefly exceeds a set limit ⇨ 126, ⇨ 130.
- If a door or the bonnet is not properly closed when vehicle exceeds a certain speed.
- If there is a fault in the brake system ⇨ 87.
- If the vehicle battery is not charging ⇨ 86.
- If engine lubrication is interrupted ⇨ 88.
- If the electronic key is outside of the detection range.

  Electronic key system ⇨ 23, Power button ⇨ 114.

When the vehicle is parked and/ or the driver's door is opened:

- If the key has been left in the ignition.
- If the electronic key has been left in the card reader.

  Electronic key system ⇨ 23, Power button ⇨ 114.
- If the vehicle is in an Autostop.

  Stop-start system ⇨ 117.
- If the exterior lights are on.

Engine oil level

If the minimum engine oil level is reached, a message is displayed in the Driver Information Centre for 30 seconds after the engine is started.

Check oil level ⇨ 140.

Trip computer

The trip computer provides information on driving data, which is continually recorded and evaluated electronically.

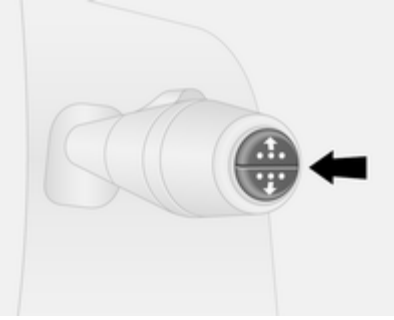

Depending on vehicle, the following functions can be selected by pressing button repeatedly on end of wiper lever:

- Fuel used
- Average consumption
- Instantaneous consumption
- Range
- Distance travelled
- Average speed
- Distance before service ⇨ 82
- Clock ⇨ 78, outside temperature ⇨ 78
- Cruise control and speed limiter stored speed ⇨ 126
- Fuel economy rating
- Tyre pressures ⇨ 158
- Fault and information messages

Fuel used

Displays the amount of fuel consumed since the last reset.

The measurement can be restarted at any time by pressing and holding the button.

Average consumption

The value is displayed after driving a distance of 400 metres.

Average consumption is displayed, taking into consideration the distance travelled and the fuel used since the last reset.

The measurement can be restarted at any time.

Instantaneous consumption

The value is displayed after reaching a speed of 30 km/h.

Range

The value is displayed after driving a distance of 400 metres.

The range is calculated from the current contents of the fuel tank and the average consumption since the last reset.

The range will not display if control indicator ⛽ is illuminated in the instrument cluster ⇨ 89.

Distance travelled

Displays the distance driven since the last reset.

The measurement can be restarted at any time.

Average speed

The value is displayed after driving a distance of 400 metres.

The average speed since the last reset is displayed.

The measurement can be restarted at any time.

Interruptions in the journey with the ignition off are not included in the calculations.

Reset trip computer information

To reset the trip computer, select one of its functions then press and hold the button on the end of the wiper lever.

The following trip computer information will be reset:

- Fuel used
- Average consumption
- Distance travelled
- Average speed

The trip computer will reset automatically when the maximum value of any of the parameters is exceeded.

Fuel economy rating (ecoScoring)

If equipped, a rating of 0 to 100 is shown in the Info-Display to help evaluate fuel efficiency, based on your driving style.

Higher ratings indicate better fuel economy.

Tips to improve fuel economy are also given in the Info-Display. Journeys can be saved in the system memory, enabling you to compare performances. Refer to Infotainment system manual for further information.

Vehicle messages ⇨ 91.

Journey record

When the engine is switched off, a record of the last journey is shown in the Info-Display.

The following information is displayed:

- Average fuel consumption
- Total fuel consumption

- Distance travelled
- Fuel saved in km

Unit of measurement

To change the unit of measurement for the duration of a journey:

With ignition off, simultaneously press the power button ⇨ 114 and press and hold button on end of wiper lever; the Driver Information Centre flashes for approx. 10 seconds until the new unit is displayed. Release button on end of wiper lever.

When the engine is switched off, the trip computer automatically returns to the original unit of measurement.

Interruption of power supply

If the power supply has been interrupted or if the vehicle battery voltage has dropped too low, the values stored in the trip computer will be lost.

Tachograph

The tachograph is operated as described in the operating instructions supplied. Observe regulations regarding use.

Lighting

Exterior lighting 95
Interior lighting 98
Lighting features 100

Exterior lighting

Light switch

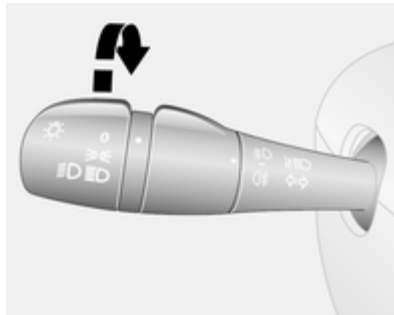

Turn outer switch:

0 = off
⇒⇐ = sidelights
≣D≣D = headlights

High beam control indicator ≣D ⇨ 89.

Low beam control indicator ≣D ⇨ 89.

Automatic light control

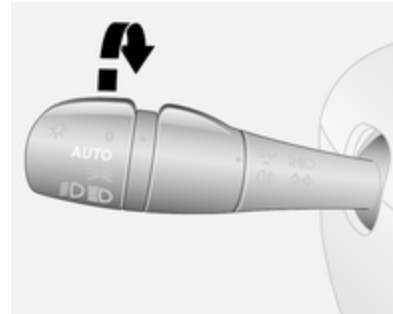

AUTO = automatic light control

When the automatic light control function is activated and the engine is running, the system switches between daytime running lights and headlights depending on the external lighting conditions.

For reasons of safety, it is advisable to have the automatic light control function activated.

Automatic headlight activation

During poor lighting conditions the headlights are switched on.

Daytime running lights ⇨ 97.

High beam

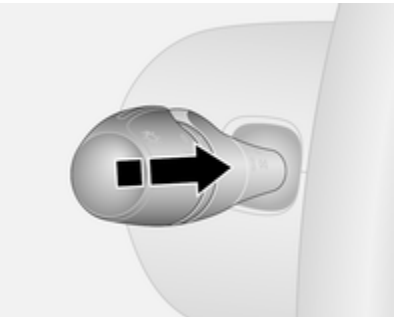

To switch from low to high beam, push lever.

To switch back to low beam, push lever again or pull.

Headlight flash

To activate the headlight flash, pull lever.

Headlight range adjustment

Manual headlight range adjustment

Adapt headlight range to the vehicle load to prevent dazzling of oncoming traffic.

Turn thumb wheel to required position:

0 = No load
4 = Loaded up to permissible maximum weight

Headlights when driving abroad

The asymmetrical headlight beam extends visibility at the edge of the road at the passenger side.

However, when driving in countries where traffic drives on the opposite side of the road, adjust the headlights to prevent dazzling of oncoming traffic.

Adjustment

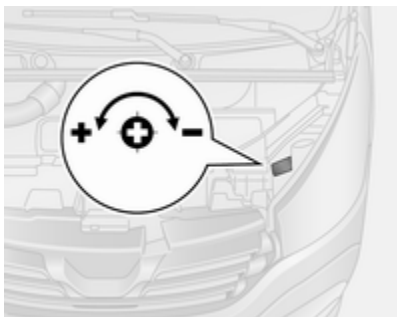

Open the bonnet ⇨ 140 and identify the marking (shown in the illustration) beside each of the headlights.

For each headlight:

Using a screwdriver, turn the screw by a $^{1}/_{4}$ turn towards the − symbol to lower the beams or towards the + symbol to raise the beams.

Ensure the headlight beams are returned to their original positions when required.

Daytime running lights

Daytime running lights increase visibility of the vehicle during daylight. They are switched on automatically when the ignition is switched on.

If required, the daytime running lights can be deactivated via the Infotainment system. For further information, refer to Infotainment system manual.

Automatic light control ⇨ 95.

Adaptive forward lighting

Cornering light

Depending on the steering angle, vehicle speed and gear selected when cornering, an additional light will illuminate the corner of the road on the respective side.

Hazard warning flashers

Operated with the ⚠ button.

In the event of hard braking, the hazard warning flashers may turn on automatically. Switch off by pressing the ⚠ button.

Turn and lane-change signals

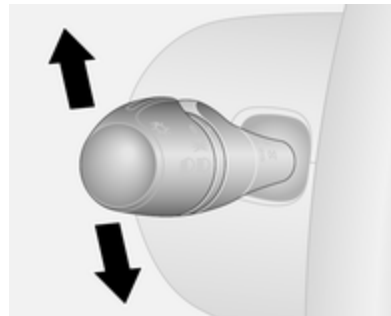

lever up	= right turn signal
lever down	= left turn signal

When the steering wheel is turned back, the lever automatically returns to its original position and the turn signal is deactivated. This will not happen when making a minor steering manoeuvre such as lane changing.

For three flashes, e.g. when changing lanes, move lever part way to first stop and then release.

If the lever is moved past the first stop, the turn signal is switched on constantly. Switch the turn signal off manually by moving the lever to its original position.

Front fog lights

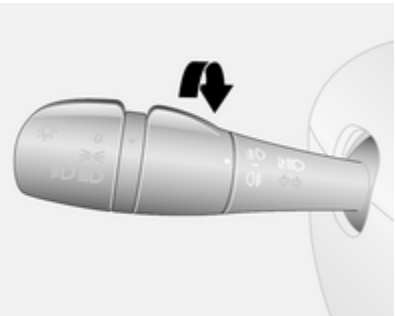

Turn inner switch to position ⚡D.

Front fog lights will only operate when the ignition and headlights are switched on.

Rear fog lights

Turn inner switch to position ⚡.

Rear fog light comes on together with front fog lights and will only operate when the ignition and headlights are switched on.

Reversing lights

The reversing lights come on when the ignition is on and reverse gear is selected.

Misted light covers

The inside of the light covers may mist up briefly in poor, wet and cold weather conditions, in heavy rain or after washing. The mist disappears quickly by itself; to help, switch on the headlights.

Interior lighting

Instrument panel illumination control

Brightness of the following lights can be adjusted when the exterior lights are on:

- Instrument panel illumination
- Info-display
- Illuminated switches and operation elements.

Turn thumb wheel until the desired brightness is obtained.

Interior lights

Front courtesy lights

Operate rocker switch:

press **O**	= off
centre position	= automatic switching on and off
press ☼	= on

With the rocker switch in its central position, the light functions as a courtesy light and illuminates when the front doors are opened.

When the front doors are closed, the courtesy light extinguishes after a delay.

Rear courtesy lights

The upper load compartment lights can be set to illuminate when the side or rear doors are opened, or switched on constantly.

Depending on vehicle, adjustable LED spotlights, also including rocker switch, may be present.

Operate rocker switch:

press **O**	= off
centre position	= automatic switching on and off
press ☼	= on

With the rocker switch in its central position, the light functions as a courtesy light and illuminates when the side or rear doors are opened.

When the doors are closed, the courtesy light extinguishes after a delay.

Load compartment lighting

The lower load compartment lights come on when the load compartment is opened.

Glove box lighting

The glovebox light comes on when the glovebox is opened.

Lighting features

Entry lighting

Welcome lighting

Vehicle lights are switched on for a short time to facilitate locating the vehicle when it is dark.

Remote control operation

Lights switch on when unlocking the vehicle with the remote control.

Electronic key system operation

Press electronic key button ☼. Press again to switch off.

Exit lighting

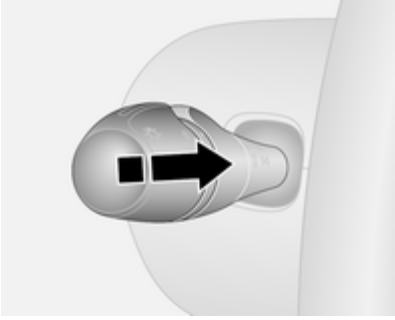

If equipped, headlights come on for approx. 30 seconds after the vehicle is parked and the system is activated.

Activating

1. Switch off ignition.
2. Remove ignition key.
3. Open driver's door.
4. Pull turn signal lever towards steering wheel.

This action can be repeated up to four times to a maximum period of 2 minutes.

The lighting is turned off immediately by switching on the ignition or turning the light switch.

Climate control

Climate control systems 101
Air vents 110
Maintenance 111

Climate control systems

Heating and ventilation system

Controls for:

- Temperature
- Fan speed
- Air distribution

Heated rear window ⊞ ⇨ 42.

Temperature

red = warm
blue = cold

Heating will not be fully effective until the engine has reached normal operating temperature.

Fan speed

Adjust the air flow by switching the fan to the desired speed.

Air distribution

= to head area
= to head area and foot well
= to foot well
= to windscreen, front door windows and foot well
= to windscreen and front door windows

Intermediate settings are possible.

Demisting and defrosting the windows

- Set temperature control to warmest level.
- Set fan speed to highest level.
- Set air distribution control to .
- Switch on heated rear window ⊞.

- Open side air vents as required and direct them towards door windows.
- For simultaneous warming of the foot well, set air distribution control to .

Heated rear window ⇨ 42.

Air conditioning system

Additional to the heating and ventilation system, the air conditioning system has:

AC = cooling
= air recirculation

Cooling (AC)

Operated with the AC button and functional only when the engine and fan are running. LED illuminates in the button when activated.

The air conditioning system cools and dehumidifies (dries) the air when outside temperature is above a specific level. Therefore condensation may form and drip from under the vehicle.

If no cooling or drying is required, switch the cooling system off to save fuel.

Note
Air conditioning performance is reduced when ECO mode has been activated ⇨ 112.

Air recirculation system

Operated with the button. LED illuminates in the button when activated.

⚠ Warning

The exchange of fresh air is reduced in air recirculation mode. In operation without cooling, the air humidity increases, so the windows may mist up from inside. The quality of the passenger compartment air deteriorates, which may cause the vehicle occupants to feel drowsy.

In warm and very humid ambient air conditions, the windscreen might mist up from outside when cold air is directed towards it. If windscreen mists up from outside, activate windscreen wiper and avoid the use of air distribution settings and .

Maximum cooling

Briefly open the windows so that hot air can disperse quickly.

- Cooling AC on.
- Air recirculation system on.
- Set air distribution control to .

- Set temperature control to coldest level.
- Set fan speed to highest level.
- Open all air vents.

Demisting and defrosting the windows

- Set temperature control to warmest level.
- Set fan speed to highest level.
- Set air distribution control to .
- Switch cooling AC on.
- Switch on heated rear window .
- Open side air vents as required and direct them towards door windows.
- For simultaneous warming of the foot well, set air distribution control to .

Heated rear window ⇨ 42.

Electronic climate control system

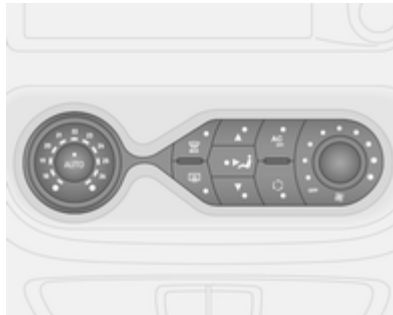

Controls for:

- Air distribution
- Temperature
- Fan speed

AUTO = automatic mode
MAX = demisting and defrosting
= heated rear window
AC OFF = switch off air conditioning
= manual air recirculation

Heated rear window ⇨ 42.

The preselected temperature is automatically regulated. In Automatic mode, the fan speed and air distribution automatically regulate the air flow.

The system can be manually adapted via the use of air distribution and air flow controls.

Electronic climate control system is only fully operational when the engine is running.

Automatic mode AUTO

Basic setting for maximum comfort:

- Switch on the fan.
- Press AUTO button; fan speed, air distribution, cooling and air recirculation are regulated automatically.
- Set the desired temperature.
- Open all air vents.

To switch off the electronic climate control system, switch off the fan.

Temperature preselection

Temperatures can be set to the desired value.

If the minimum temperature is set, the climate control system runs at maximum cooling.

If the maximum temperature is set, the climate control system runs at maximum heating.

Demisting and defrosting the windows

- Press button MAX. LED illuminates in the button when activated.
- Temperature, air distribution and cooling are regulated automatically and the fan runs at high speed.
- Switch on heated rear window ⇨ 42.

To return to Automatic mode: press button MAX or **AUTO**.

Note
If the MAX button is pressed while the engine is running, an Autostop will be inhibited until the MAX button is pressed again.

If the MAX button is pressed while the engine is in an Autostop, the engine will restart automatically.

Stop-start system ⇨ 117.

Manual settings

Manually changing any of the following settings will deactivate Automatic mode:

Fan speed

Adjust the air flow manually by switching the fan to the desired speed.

If the fan is switched off, the air conditioning is also deactivated.

Air distribution

Press appropriate button for desired adjustment. LED illuminates in the button when activated.

▲ = to windscreen and front door windows.
= to head area.
▼ = to foot well.

Combinations of settings are possible by pressing two buttons until both LEDs are illuminated.

To return to Automatic mode: Press **AUTO** button.

Cooling AC

The air conditioning system cools and dehumidifies (dries) the air when outside temperature is above a specific level. Therefore condensation may form and drip from under the vehicle.

Note
Air conditioning performance is reduced when ECO mode has been activated ⇨ 112.

If no cooling or drying is required press the **AC OFF** button to switch the cooling system off, thus saving fuel. LED illuminates in the button.

To return to Automatic mode: Press **AUTO** button.

Air recirculation mode

Activate or deactivate manual air recirculation mode with the button. LED illuminates in the button when activated.

⚠Warning

The exchange of fresh air is reduced in air recirculation mode. In operation without cooling the air humidity increases, so the windows may mist up from inside. The quality of the passenger compartment air deteriorates, which may cause the vehicle occupants to feel drowsy.

To return to Automatic mode: Press **AUTO** button.

Rear heating system

The rear passenger compartment heating fan assists air flow to the rear passenger compartment via the rear air vents.

The rate of air flow is determined by the fan. Air temperature is controlled using the temperature control on the instrument panel.

Rear air conditioning system

The rear air conditioning system is actuated in conjunction with the front passenger compartment air conditioning system.

Rear air conditioning fan switch

The rear air conditioning fan assists air flow to the rear passenger compartment via the rear air vents.

Switch on the fan while the air conditioning system is operating to allow cooled and dehumidified (dried) air to be distributed.

The rate of air flow is determined by the fan.

Auxiliary heater

Coolant heater

The Eberspächer engine-independent, fuel-powered coolant heater provides rapid heating of the engine coolant to enable heating of the vehicle interior without the engine running.

Caution
Do not touch the exhaust pipe. It may be hot even after the engine has been switched off, due to coolant heater operation.

Before starting or programming the system to start, turn the vehicle's climate control system to heat and the air distribution to .

⚠ Warning
Do not operate the system when refuelling, when dust or combustible vapours are present or in enclosed spaces (e.g. garage).

Switch off when not required. Heating stops automatically after the programmed runtime. It will also cease to operate if the vehicle fuel level drops too low.

During operation, power from the vehicle battery is used. The driving time should therefore be at least as long as the heating time. For short journey times, check the vehicle battery regularly and recharge if necessary.

To ensure efficient performance, briefly operate the auxiliary heater once a month.

Control units

The timer or remote control unit turns the system on and off, and is used to programme specific departure times.

Timer

1 ⏻ **Activation button**	= Switches the control unit on/off and changes displayed information
2 ⮐ **Back button**	= Selects functions in the menu bar and adjusts values
3 **Menu bar**	= Displays the selectable functions ♨, ✱, P, ⏲ and ↻
4 ⮑ **Next button**	= Selects functions in the menu bar and adjusts values
5 **OK button**	= Confirms selection

Remote control

The control buttons operate identically to the timer unit described previously.

To activate the remote control, press activation button ⏻ and release it when the menu bar appears in the display. The signal indicator and **SENd** appear briefly in the display, followed by the temperature.

⚠Warning

When refuelling, switch off the remote control unit as well as the heater!

To switch off, press and hold activation button ⏻ to prevent inadvertent operation.

The remote control has a maximum range of 600 metres. The range may be reduced due to environmental conditions and as the battery becomes weaker.

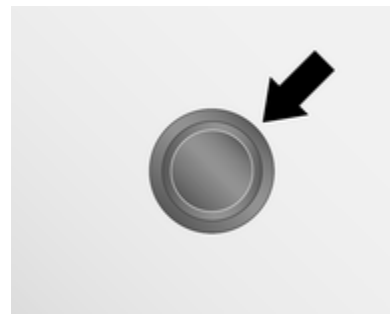

In addition to the remote control unit, the heating can also be switched on for 30 minutes, or off, using the button.

Battery replacement

Replace the battery when the range of the remote control is reduced or when the battery charge symbol flashes.

Open the cover using a coin and replace the battery (CR 2430 or equivalent), ensuring the new battery is correctly installed with the positive (+) side facing the positive terminals. Replace the cover securely.

Dispose of old batteries in accordance with environmental regulations.

Batteries do not belong in household waste. They must be disposed of at an appropriate recycling collection point.

Remote control fault displays

cobA	=	Poor signal – adjust position
conP	=	No signal – move closer
bALo	=	Battery low – change battery
Err	=	System error – consult workshop
Add, AddE	=	System in learning mode

Teach remote control

If the vehicle battery is reconnected, the LED in the instrument panel button illuminates and the system configures the remote control menu automatically. If the LED flashes, press **OK** button on remote control, select **Add** or **AddE** and confirm.

Additional remote control units may also be configured. Press the button until LED flashes, switch on the remote control, select **Add** and confirm.

AddE teaches the current remote control unit exclusively and blocks all previously configured units. **Add** teaches up to 4 remote control units, but only one unit can operate the system at any one time.

Operation

Heating

Select in the menu bar and confirm. The predetermined heating duration, e.g. **L 30**, flashes in the display. The factory setting is 30 minutes.

To temporarily adjust the heating duration, adjust with the or button and confirm. The value can be set from 10 to 120 minutes. Due to the power consumption, note the heating duration.

To switch off, select in the menu bar again and confirm.

Ventilation ✠

Select ✠ in the menu bar and confirm.

The ventilation duration can be accepted or adjusted. The duration shown is accepted without confirmation.

To switch off, select ✠ in the menu bar again and confirm.

Programming P

Up to 3 preset departure times can be programmed, either during one day or over one week.

- Select **P** in the menu bar and confirm
- Select desired preset memory number **1**, **2** or **3** and confirm
- Select day and confirm
- Select hour and confirm
- Select minutes and confirm
- Select ♨ or ✠ and confirm
- If necessary, adjust the runtime duration prior to departure and confirm

The next preset memory number to be activated is underlined and the weekday is displayed. Repeat the procedure to programme the other preset memory numbers.

Pressing button ⏻ during the procedure will exit without storing programme adjustments.

To delete a preset departure time, follow the steps for programming until heating symbol ♨ flashes. Press button ▲ or ▼ until **oFF** appears in the display and confirm.

Heating stops automatically 5 minutes after the programmed departure time.

Note

The remote control system features a temperature sensor which calculates the runtime according to the ambient temperature and the desired heating level (ECO or HIGH). The system starts automatically between 5 and 60 minutes prior to the programmed departure time.

Set weekday, time and heating duration ◴

If the vehicle battery is disconnected or its voltage is too low, the unit will need to be reset.

- Select ◴ and confirm
- Select weekday and confirm
- Change hours and confirm
- Change minutes and confirm
- Change the default heating duration and confirm

Heating level ↻

The preferred heating level for programmed departure times can be set to either ECO or HIGH.

Select ↻ and confirm. ECO or HIGH flashes in the display. Adjust using the ▲ or ▼ button and confirm.

Air vents

Adjustable air vents

At least one air vent must be open while cooling is on, in order to prevent the evaporator from icing up due to lack of air movement.

⚠Warning

Do not attach any objects to the slats of the air vents. Risk of damage and injury in case of an accident.

Centre air vents

To open or close the centre air vents and direct the flow of air, tilt the slats up or down and turn the adjuster wheel left or right.

Side air vents

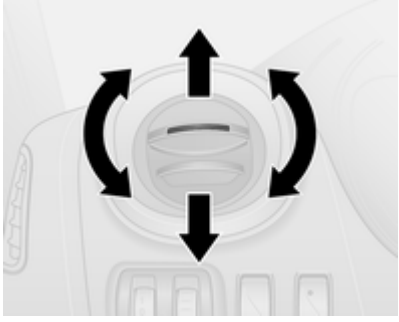

To open or close the side air vents, tilt the slats up or down.

Direct the flow of air by rotating the vents.

Depending upon the position of the temperature control, air will be directed into the vehicle via the side air vents.

Rear air vents

Depending on vehicle, additional adjustable air vents are located in the rear passenger compartment.

Fixed air vents

Additional air vents are located beneath the windscreen and door windows, in the foot wells and, depending on vehicle, in the rear passenger compartment.

Glovebox cooler

The air conditioning system can also keep the contents of the glovebox cool.

Maintenance

Air intake

The air intake in front of the windscreen in the engine compartment must be kept clear to allow air intake. Remove any leaves, dirt or snow.

Pollen filter

The pollen filter cleans dust, soot, pollen and spores from the air entering the vehicle through the air intake.

Air conditioning regular operation

In order to ensure continuously efficient performance, cooling must be operated for a few minutes once a month, irrespective of the weather and time of year. Operation with cooling is not possible when outside temperature is too low.

Service

For optimal cooling performance, it is recommended that the climate control system be checked annually, starting three years after initial vehicle registration, including:

- Functionality and pressure test
- Heating functionality
- Leakage check
- Check of drive belts
- Cleaning of condenser and evaporator drainage
- Performance check

Driving and operating

Driving hints 112
Starting and operating 113
Engine exhaust 120
Manual transmission 121
Brakes 122
Ride control systems 124
Driver assistance systems 126
Fuel 134
Trailer hitch 136

Driving hints

Driving economically

ECO mode

ECO mode is a function that optimises fuel consumption. It affects engine power and torque, acceleration, gear shift indication, heating, air conditioning and electrical consumers.

Activation

Press the **ECO** button. Control indicator **ECO** illuminates in the instrument cluster when activated.

During driving, it is possible to temporarily disable ECO mode, e.g. to increase engine performance, by depressing the accelerator pedal firmly. **ECO** flashes in the instrument cluster.

ECO mode is reactivated when pressure is reduced on the accelerator pedal. **ECO** stops flashing and illuminates continuously.

Deactivation

Press the **ECO** button again. Control indicator **ECO** extinguishes in the instrument cluster.

Control of the vehicle

Never coast with engine not running

Many systems will not function in this situation (e.g. brake servo unit, power steering). Driving in this manner is a danger to yourself and others.

Pedals

To ensure the pedal travel is uninhibited, there must be no mats in the area of the pedals.

Steering

If power steering assist is lost because the engine stops or due to a system malfunction, the vehicle can be steered but may require increased effort.

Caution

Vehicles equipped with hydraulic power steering:

If the steering wheel is turned until it reaches the end of its travel, and is held in that position for more than 15 seconds, damage may occur to the power steering system and there may be loss of power steering assist.

Starting and operating

New vehicle running-in

Do not brake unnecessarily hard for the first few journeys and after new disc brake pads have been fitted.

During the first drive, smoke may occur because of wax and oil evaporating off the exhaust system. Park the vehicle in the open for a while after the first drive and avoid inhaling the fumes.

During the running-in period fuel and engine oil consumption may be higher and the cleaning process of the diesel particle filter may take place more often. Autostop may be inhibited to allow for charging the vehicle battery.

Stop-start system ⇨ 117.

Diesel particle filter ⇨ 120.

Ignition switch positions

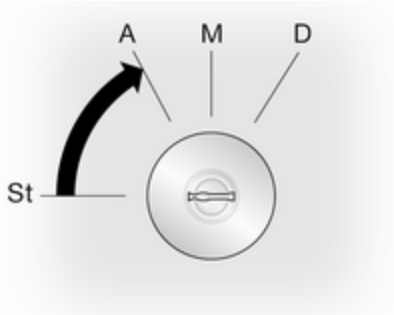

St = Ignition off
A = Steering wheel lock released, ignition off
M = Ignition on
Diesel engines: preheating
D = Starting

Power button

Electronic key must be inside the vehicle, either in the card reader or the front passenger compartment.

If the electronic key is not inside the vehicle, a corresponding message appears in the Driver Information Centre ⇨ 90.

Note
Do not put the electronic key in the load compartment during driving, as this is outside of the detection zone (indicated by a warning chime at low speed ⇨ 91 and a message in the Driver Information Centre ⇨ 91).

Some functions, e.g. Infotainment system, are available for use as soon as you enter the vehicle.

Accessory power mode

Press **Start/Stop** button without operating clutch or brake pedal to enable further electrical functions to be operated.

Engine start

Operate clutch and brake pedal and press **Start/Stop** button. Release button after starting procedure begins.

If a gear is engaged, the engine can be started only by operating the clutch pedal and pressing the **Start/Stop** button.

In some cases, it may be necessary to move the steering wheel slightly while pressing the **Start/Stop** button to release the steering wheel lock. A corresponding message appears in the Driver Information Centre ⇨ 90.

At very low outside temperatures (e.g. below -10 °C) keep the clutch pedal depressed while pressing the **Start/Stop** button until the engine starts.

If one of the starting conditions is not applied, a corresponding message appears in the Driver Information Centre ⇨ 90.

Vehicle messages ⇨ 91.

Engine stop

Electronic key must be inside the vehicle, either in the card reader or the front passenger compartment.

With the vehicle stationary, press the **Start/Stop** button to stop the engine. The steering wheel lock is engaged when the driver's door is opened and the vehicle is locked.

If the electronic key is not detected, a corresponding message appears in the Driver Information Centre ⇨ 90. In this event, press the **Start/Stop** button for 2 seconds to stop the engine.

Central locking system ⇨ 25.

Retained power off

Press the **Start/Stop** button for more than two seconds; the engine is stopped while some functions, e.g. Infotainment system, are available for use for approx. 10 minutes.

These functions stop working when the driver's door is opened and the vehicle is locked.

Note

Always take the electronic key with you when exiting the vehicle.

The electronic key being left in the card reader is indicated by a warning chime ⇨ 91 and a message in the Driver Information Centre ⇨ 91 when the driver's door is opened.

⚠ Danger

Never leave an electronic key inside the vehicle when children or animals are left in the vehicle, to avoid unintended operation of windows, doors or engine. Risk of fatal injury.

Fault

If the engine cannot be started, the cause may be one of the following:

- Fault in electronic key.
- Electronic key out of reception range.
- Battery voltage too low.
- Overload of the central locking system by operating at frequent intervals, the power supply is interrupted for a short time.
- Interference from higher-power radio waves from other sources.

Battery replacement ⇨ 21.

Central locking system ⇨ 25.

Electronic key system ⇨ 23.

Starting the engine

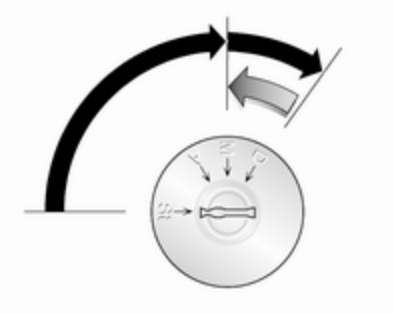

Manual transmission: operate clutch.

Do not accelerate.

Diesel engines: turn the key to position **M** for preheating until control indicator extinguishes in the instrument cluster ⇨ 88.

Turn key to position **D** and release.

The increased engine speed automatically returns to normal idling speed as the engine temperature rises.

Start attempts should not last longer than 15 seconds. If engine does not start, wait 15 seconds before repeating starting procedure. If necessary, depress accelerator before repeating starting procedure.

Before restarting or to switch off the engine, turn key back to **St**.

During an Autostop, the engine can be started by depressing the clutch pedal. Stop-start system ⇨ 117.

Turbo engine warm-up

Upon start-up, engine available torque may be limited for a short time, especially when the engine temperature is cold. The limitation is to allow the lubrication system to fully protect the engine.

Idle speed control

To increase the idle speed, press the switch. After a few seconds the function will be activated.

The function will be deactivated when:

- The clutch pedal is depressed
- The accelerator pedal is depressed
- Vehicle speed is above 0 km/h
- Control indicator , or STOP illuminate in the instrument cluster

To increase or decrease the fast idle speed rate, consult a workshop.

Vehicle shutdown

Fuel cut-off system

If the vehicle runs out of fuel, the fuel system is cut-off and must be reset after refuelling. A corresponding warning message may also appear in the Driver Information Centre ⇨ 90.

⚠ Danger

If you can smell fuel in the vehicle, or a fuel leak is present, have the cause of this remedied immediately by a workshop. Do not reset the fuel cut-off system, to avoid the risk of fire.

Resetting with remote control key / manual key

To reset the fuel cut-off system and enable the vehicle to be driven:

1. Turn the ignition key to position **M** ⇨ 114.
2. Wait a few minutes to allow the fuel system to be reset.
3. Turn key to position **D** to start the engine.

If the engine does not start, repeat the procedure.

Resetting with electronic key system

To reset the fuel cut-off system and enable the vehicle to be driven:

1. Insert the electronic key in the card reader ⇨ 114.
2. Press the engine start/stop button without depressing any pedals.
3. Wait a few minutes to allow the fuel system to be reset.

If the engine does not start, repeat the procedure.

Electronic key system ⇨ 23.

Power button ⇨ 114.

Refuelling ⇨ 134.

Overrun cut-off

The fuel supply is automatically cut off during overrun, i.e. when the vehicle is driven with a gear engaged but accelerator is released.

Stop-start system

The stop-start system helps to save fuel and to reduce the exhaust emissions. When conditions allow, it switches off the engine as soon as the vehicle is at a low speed or at a standstill, e.g. at a traffic light or in a traffic jam. It restarts the engine automatically as soon as the clutch pedal is depressed.

Activation

The stop-start system is available as soon as the engine is started, the vehicle starts-off and the conditions as stated below in this section are fulfilled.

Deactivation

Deactivate the stop-start system manually by pressing the button. LED in the button illuminates to indicate deactivation and a corresponding message appears in the Driver Information Centre ⇨ 90.

If deactivated manually, it is possible to reactivate the stop-start system by pressing the button again.

Vehicle messages ⇨ 91.

Autostop

If the vehicle is at a low speed or at a standstill, activate an Autostop as follows:

- Depress the clutch pedal.
- Move the selector lever to neutral.
- Release the clutch pedal.

The engine will be switched off while the ignition stays on.

An Autostop is indicated when Ⓐ illuminates in the instrument cluster ⇨ 89.

During an Autostop, brake performance will be maintained. However, brake assist is not available ⇨ 123.

Conditions for an Autostop

The stop-start system checks if each of the following conditions is fulfilled:

- The stop-start system is not manually deactivated.
- the bonnet is fully closed.
- the vehicle battery is sufficiently charged and in good condition.
- the engine is warmed up.
- the engine coolant temperature is not too high.
- the outside temperature is not too low or too high (e.g. below 0 °C or above 30 °C).
- the brake vacuum is sufficient.
- the defrosting function is not activated ⇨ 103.

- the self-cleaning function of the diesel particle filter is not active ⇨ 120.
- the vehicle has moved since the last Autostop.

Otherwise an Autostop will be inhibited.

Restart of the engine by the driver

Depress the clutch pedal to restart the engine.

Control indicator Ⓐ ⇨ 89 extinguishes in the instrument cluster when the engine is restarted.

Restart of the engine by the stop-start system

The selector lever must be in neutral to enable an automatic restart.

If one of the following conditions occurs during an Autostop, the engine will be restarted automatically by the stop-start system:

- The stop-start system is manually deactivated.
- the bonnet is opened.
- the vehicle battery is discharged.
- the engine temperature is too low.
- the brake vacuum is not sufficient.
- the vehicle starts to move.
- the defrosting function is activated ⇨ 103.

If an electrical accessory, e.g. a portable CD player, is connected to the power outlet, a brief power drop during engine restart may be noticeable.

Fault

If a fault occurs in the stop-start system, the LED in button Ⓐ illuminates, and a corresponding message appears in the Driver Information Centre ⇨ 90. Seek the assistance of a workshop.

Vehicle messages ⇨ 91.

Warning chimes ⇨ 91.

Parking

⚠ Warning

- Do not park the vehicle on an easily ignitable surface. The high temperature of the exhaust system could ignite the surface.
- Always apply parking brake without pressing release button. Apply as firmly as possible on a downhill slope or uphill slope. Depress foot brake at the same time to reduce operating force.
- Switch off the engine.
- If the vehicle is on a level surface or uphill slope, engage first gear. On an uphill slope, turn the front wheels away from the kerb.

  If the vehicle is on a downhill slope, engage reverse gear. Turn the front wheels towards the kerb.

Lock the vehicle ⇨ 25 and activate the anti-theft locking system ⇨ 34 and anti-theft alarm system ⇨ 35.

Engine exhaust

⚠ Danger

Engine exhaust gases contain poisonous carbon monoxide, which is colourless and odourless and could be fatal if inhaled.

If exhaust gases enter the interior of the vehicle, open the windows. Have the cause of the fault rectified by a workshop.

Avoid driving with an open load compartment, otherwise exhaust gases could enter the vehicle.

Diesel particle filter

The diesel particle filter system filters harmful soot particles out of the exhaust gases. The system includes a self-cleaning function that runs automatically during driving without any notification.

The filter is cleaned by periodically burning off the soot particles at high temperature. This process takes place automatically under set driving conditions. Autostop is not available and fuel consumption may be higher during this period. The emission of smells and smoke during this process is normal.

Under certain driving conditions, e.g. short distances, the system cannot clean itself automatically.

If cleaning of the filter is required and if previous driving conditions did not enable automatic cleaning, it will be indicated by the illumination of control indicators 🔧 ⇨ 86 and ⇨ 86 in the instrument cluster. Seek the assistance of a workshop immediately.

Caution

If the cleaning process is interrupted, there is a risk of provoking severe engine damage.

Cleaning takes place quickest at high engine speeds and loads.

Catalytic converter

The catalytic converter reduces the amount of harmful substances in the exhaust gases.

Caution

Fuel grades other than those listed on page ⇨ 134, ⇨ 182 could damage the catalytic converter or electronic components.

Unburnt fuel will overheat and damage the catalytic converter. Therefore avoid excessive use of the starter, running the fuel tank dry and starting the engine by pushing or towing.

In the event of misfiring, uneven engine running, a reduction in engine performance or other unusual problems, have the cause of the fault rectified by a workshop as soon as possible. In an emergency, driving can be continued for a short period, keeping vehicle speed and engine speed low.

If control indicator flashes, the permitted emission limits may be exceeded. Lift your foot off the accelerator until stops flashing and is steadily illuminated. Contact a workshop immediately.

Malfunction indicator light ⇨ 86.

Manual transmission

To engage reverse, with the vehicle stationary depress the clutch pedal, pull up the collar on the selector lever and engage the gear against the resistance.

If the gear does not engage, set the lever in neutral, release the clutch pedal and depress again; then repeat gear selection.

Do not slip the clutch unnecessarily.

When operating, depress the clutch pedal completely. Do not use the pedal as a foot rest.

Caution
It is inadvisable to drive with hand resting on the selector lever.

Brakes

The brake system comprises two independent brake circuits.

If a brake circuit fails, the vehicle can still be braked using the other brake circuit. However, braking effect is achieved only when you depress the brake pedal firmly. You need to use considerably more force for this. The braking distance is extended. Seek the assistance of a workshop before continuing your journey.

When the engine is not running, the support of the brake servo unit disappears once the brake pedal has been depressed once or twice. Braking effect is not reduced, but braking requires significantly greater force. It is especially important to bear this in mind when being towed.

If control indicator ⓘ illuminates in the instrument cluster while driving and a corresponding message appears in the Driver Information Centre, there is a fault in the braking system. Seek the assistance of a workshop immediately.

Control indicator ⓘ ⇨ 87.

Vehicle messages ⇨ 91.

Antilock brake system

Antilock brake system (ABS) prevents the wheels from locking.

ABS starts to regulate brake pressure as soon as a wheel shows a tendency to lock. The vehicle remains steerable, even during hard braking.

ABS control is made apparent through a pulse in the brake pedal and the noise of the regulation process.

For optimum braking, keep the brake pedal fully depressed throughout the braking process, despite the fact that the pedal is pulsating. Do not reduce the pressure on the pedal.

Control indicator (ABS) ⇨ 87.

Fault

If control indicator (ABS) does not go out a few seconds after the ignition is switched on, or if it illuminates while driving, there is a fault in the ABS. Control indicator 🔧 ⇨ 86 may also illuminate in the instrument cluster together with a corresponding message in the Driver Information Centre. The brake system remains operational but without ABS regulation.

⚠ Warning

If there is a fault in the ABS, the wheels may be liable to lock due to braking that is heavier than normal. The advantages of ABS are no longer available. During hard braking, the vehicle can no longer be steered and may swerve.

If control indicators (ABS), 🔧, ⓘ ⇨ 87 and STOP ⇨ 86 illuminate, there is a fault in the braking system. A corresponding message also appears in the Driver Information Centre ⇨ 90. Have the cause of the fault remedied by a workshop.

Vehicle messages ⇨ 91.

Parking brake

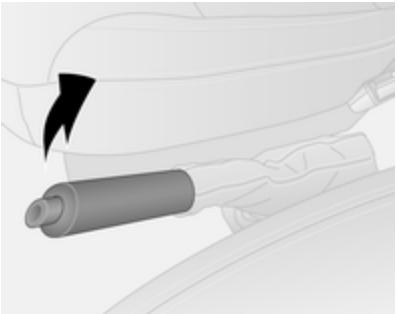

⚠Warning

Always apply parking brake firmly without operating the release button, and apply as firmly as possible on a downhill or uphill slope.

To release the parking brake, pull the lever up slightly, press the release button and fully lower the lever.

To reduce the operating forces of the parking brake, depress the foot brake at the same time.

Control indicator ⓘ ⇨ 87.

Parking ⇨ 119.

Brake assist

If the brake pedal is depressed quickly and forcefully, maximum brake force is automatically applied (full braking).

Maintain steady pressure on the brake pedal for as long as full braking is required. Maximum brake force is automatically reduced when the brake pedal is released.

Brake assist is not available during an Autostop.

Stop-start system ⇨ 117.

Hill start assist

The system helps prevent unintended movement when driving away on inclines.

When releasing the foot brake after stopping on an incline (with the selector lever in a forward gear or reverse gear), the brakes remain on for a further 2 seconds. The brakes release automatically as soon as the vehicle begins to accelerate.

Caution

The Hill start assist cannot completely prevent vehicle movement in all situations (extremely steep gradients, etc.).

If necessary, depress the foot brake to prevent the vehicle from rolling forwards or backwards.

The Hill start assist is not active during an Autostop. Stop-start system ⇨ 117.

Ride control systems

Traction Control system

The Traction Control system (TC) is a component part of the Electronic Stability Program (ESP®Plus) which improves driving stability when necessary, regardless of the type of road surface or tyre grip, by preventing the drive wheels from spinning.

As soon as the drive wheels starts to spin, engine output is reduced and the wheel spinning the most is braked individually. This considerably improves the driving stability of the vehicle on slippery road surfaces.

TC is operational as soon as the ignition is switched on and control indicator extinguishes in the instrument cluster. A corresponding message also appears in the Driver Information Centre ⇨ 90.

When TC is active flashes.

⚠Warning

Do not let this special safety feature tempt you into taking risks when driving.

Adapt speed to the road conditions.

Control indicator ⇨ 87.

Trailer stability assist (TSA) ⇨ 137.

Enhanced Traction function

If necessary, in the event of soft ground, mud or snow-covered road surfaces, the Traction control system (TC) can be deactivated to enhance traction:

Press the button on the instrument panel.

Control indicator illuminates in the instrument cluster and a corresponding message appears in the Driver Information Centre ⇨ 90.

When vehicle speed reaches 50 km/h, the system switches automatically from Enhanced

Traction function to TC operation. Control indicator extinguishes in the instrument cluster.

TC is reactivated by pressing the button again. Control indicator extinguishes.

TC is also reactivated the next time the ignition is switched on.

Fault

If the system detects a fault, control indicator ⇨ 87 illuminates together with ⇨ 86 in the instrument cluster and a corresponding message appears in the Driver Information Centre ⇨ 90.

TC is not operational. Have the cause of the fault remedied by a workshop.

Vehicle messages ⇨ 91.

Electronic stability program

The Electronic Stability Program (ESP®Plus) improves driving stability when necessary, regardless of the type of road surface or tyre grip. It also prevents the drive wheels from spinning.

As soon as the vehicle starts to swerve (understeer/oversteer), engine output is reduced and the wheels are braked individually. This considerably improves the driving stability of the vehicle on slippery road surfaces.

ESP®Plus is operational as soon as the ignition is switched on and control indicator extinguishes in the instrument cluster. A corresponding message also appears in the Driver Information Centre ⇨ 90.

When ESP®Plus comes into action flashes.

⚠ Warning

Do not let this special safety feature tempt you into taking risks when driving.

Adapt speed to the road conditions.

Control indicator ⇨ 87.

Trailer stability assist (TSA) ⇨ 137.

Enhanced Traction function

If necessary, in the event of soft ground, mud or snow-covered road surfaces, ESP®Plus can be deactivated to enhance traction:

Press the button on the instrument panel.

Control indicator illuminates in the instrument cluster and a corresponding message appears in the Driver Information Centre ⇨ 90.

When vehicle speed reaches 50 km/h, the system switches automatically from Enhanced Traction function to ESP®Plus operation. Control indicator extinguishes in the instrument cluster.

ESP®Plus is reactivated by pressing the button again. Control indicator extinguishes.

ESP®Plus is also reactivated the next time the ignition is switched on.

Fault

If the system detects a fault, control indicator ⇨ 87 illuminates together with ⇨ 86 in the instrument cluster and a corresponding message appears in the Driver Information Centre ⇨ 90.

The Electronic stability program (ESP®Plus) is not operational. Have the cause of the fault remedied by a workshop.

Vehicle messages ⇨ 91.

Driver assistance systems

⚠ Warning

Driver assistance systems are developed to support the driver and not to replace the driver's attention.

The driver accepts full responsibility when driving the vehicle.

When using driver assistance systems, always take care regarding the current traffic situation.

Cruise control

The cruise control can store and maintain speeds of 30 km/h and above. Deviations from the stored speeds may occur when driving uphill or downhill.

For safety reasons the cruise control cannot be activated until the foot brake has been operated once.

Do not use the cruise control if it is not advisable to maintain a constant speed.

Control indicators and ⇨ 89.

Activation

Press switch , control indicator illuminates green in the instrument cluster.

Cruise control is now in standby mode and a corresponding message appears in the Driver Information Centre.

Accelerate to the desired speed and press switch + or −. The current speed is now stored and maintained and the accelerator pedal can be released.

Control indicator illuminates green in the instrument cluster together with and a corresponding message appears in the Driver Information Centre.

Vehicle speed can be increased by depressing the accelerator pedal. The stored speed flashes in the instrument cluster. When the accelerator pedal is released, the previously stored speed is resumed.

Cruise control remains activated while gearshifting.

The speed is saved until the ignition is switched off.

Increase speed

With cruise control active, the vehicle speed can be increased continuously or in small increments by holding down or tapping switch **+** repeatedly.

When the switch is released the current speed is stored and maintained.

Alternatively, accelerate to the desired speed and store by pressing switch **+**.

Reduce speed

With cruise control active, the vehicle speed can be decreased continuously or in small increments by holding down or tapping switch **−** repeatedly.

When the switch is released the current speed is stored and maintained.

Deactivation

Press switch **O**: cruise control is deactivated and the green control indicator extinguishes in the instrument cluster.

Automatic deactivation:

- Vehicle speed drops below 30 km/h,
- The brake pedal is depressed,
- The clutch pedal is depressed,
- Selector lever in **N**.

The speed is stored and a corresponding message appears in the Driver Information Centre.

Reactivation

Press switch **R** at a speed above 30 km/h.

If the stored speed is much higher than the current speed, the vehicle will accelerate powerfully until the stored speed is obtained.

Pressing switch **+** will also reactivate the cruise control function, but at the current vehicle speed only, not the stored speed.

Deleting the stored speed

Press switch : Green control indicators and extinguish in the instrument cluster.

Cruise control speed limiter

The speed limiter prevents the vehicle exceeding a preset maximum speed above 30 km/h.

Activation

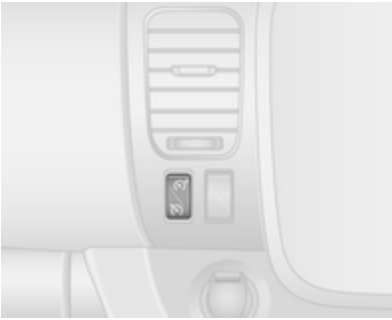

Press switch, control indicator illuminates yellow in the instrument cluster.

Cruise control speed limiter function is now in standby mode and a corresponding message appears in the Driver Information Centre.

Accelerate to the desired speed and press switch + or −. The current speed is recorded.

The vehicle can be driven normally but it will not be possible to exceed the programmed speed limit except in an emergency.

Where the limit speed cannot be maintained, e.g. when driving on a steep decline, the limit speed will flash in the Driver Information Centre ⇨ 90, accompanied by a warning chime.

Increase limit speed

The limit speed can be increased continuously or in small increments by holding down or tapping switch + repeatedly.

Reduce limit speed

The limit speed can be decreased continuously or in small increments by holding down or tapping switch − repeatedly.

Exceeding the limit speed

In the event of an emergency, it is possible to exceed the limit speed by depressing the accelerator pedal firmly beyond the point of resistance. The limit speed will flash in the Driver Information Centre ⇨ 90 during this period, accompanied by a warning chime.

Release the accelerator pedal and the speed limiter function is reactivated once a speed lower than the limit speed is obtained.

Note
In vehicles fitted with a Speed limiter, fully depressing the accelerator pedal will not allow you to exceed the set maximum vehicle speed. Speed limiter ⇨ 130.

Deactivation

Press switch O: Speed limiter is deactivated and the vehicle can be driven normally.

The limit speed is stored and a corresponding message appears in the Driver Information Centre.

Reactivation

Press switch R: The speed limiter function is reactivated.

Pressing switch + will also reactivate the speed limiter function, but at the current vehicle speed only, not the stored speed.

Deleting the limit speed
Press switch ⚠: Yellow control indicator ⚠ extinguishes in the instrument cluster.

Speed limiter

Maximum speed limiter

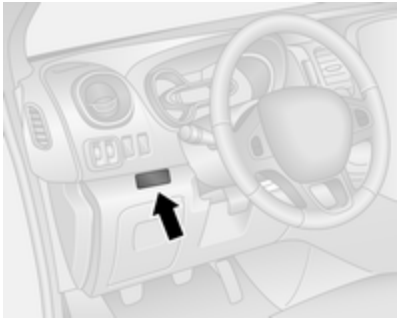

In accordance with local or national regulations, the vehicle may be equipped with a fixed maximum speed limiter that cannot be disabled.

If equipped, a warning label indicating the fixed maximum speed limit (90 to 130 km/h) is located on the instrument panel.

Deviations from the maximum speed limit may occur briefly when driving downhill, for physical reasons.

A warning buzzer will sound for 10 seconds every 40 seconds if the vehicle briefly exceeds the set limit.

Vehicles also equipped with cruise control speed limiter: the maximum speed cannot be exceeded by depressing the accelerator pedal firmly beyond the point of resistance.

Cruise control speed limiter ⇨ 126.

Parking assist

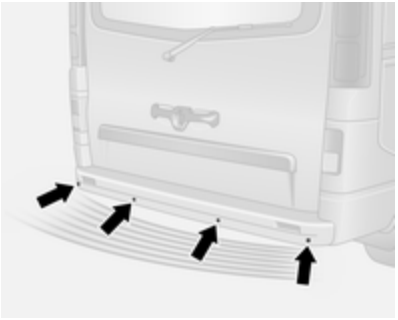

The parking assist makes reverse parking easier by measuring the distance between the rear of the vehicle and obstacles. It is the driver, however, who bears full responsibility for parking.

The system consists of four ultrasonic parking sensors in the rear bumper.

Note
Attached parts in the detection area cause system malfunction.

Activation

When reverse gear is engaged, the system switches itself on automatically. Readiness for operation is indicated by a brief acoustic signal.

An obstacle is indicated by buzzers and, depending on vehicle, is also indicated in the Info-Display. The interval between the buzzers becomes shorter as the vehicle gets closer to the obstacle. When the distance is less than 30 cm, the buzzer is continuous.

Note
In versions with Info-Display indication, the volume of the buzzer can be adjusted via the Infotainment system. Refer to Infotainment system manual for further information.

⚠ Warning

Under certain circumstances, various reflective surfaces on objects or clothing as well as external noise sources may cause the system to fail to detect obstacles.

Deactivation

Deactivate the system by pressing the P button on the instrument panel with the ignition on. LED illuminates in the button when deactivated. When reverse gear is selected, no acoustic signal will sound.

Note
In versions with Info-Display indication, the function can be deactivated via the Infotainment system. Refer to Infotainment system manual for further information.

The function is reactivated by pressing button P again or the next time the ignition is switched on.

Fault

If the system detects an operating fault, when selecting reverse gear a continuous acoustic alarm will sound for approx. 5 seconds, a corresponding message appears in the Driver Information Centre ⇨ 90 and 🔧 illuminates in the instrument cluster ⇨ 86. Consult a workshop to have the cause of the fault remedied.

Caution

When reversing, the area should be free from obstacles which could impact on the underside of the vehicle.

Impact to the rear axle, which may not be visible, could lead to uncharacteristic changes in the vehicle handling. In the event of such an impact, consult a workshop.

Vehicle messages ⇨ 91.

Rear view camera

The rear view camera assists the driver when reversing by displaying a view of the area behind the vehicle in the interior mirror or in the Info-Display.

⚠ Warning

The rear view camera does not replace driver vision. Note that objects that are outside the camera's field of view, e.g. below the bumper or underneath the vehicle, are not displayed.

Do not reverse the vehicle by only looking at the display and check the surrounding area behind and around the vehicle before reversing.

Activation

Rear view camera is automatically activated when reverse gear is engaged.

Functionality

The camera is mounted above the rear doors/tailgate.

The area displayed by the camera is limited. The distance of the image that appears on the display differs from the actual distance.

Trajectory lane display (1)

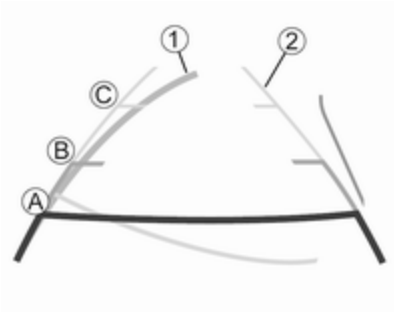

Depending on version, the trajectory lane (1) of the vehicle is shown in blue on the Info-Display. It shows the path of the vehicle in accordance with the steering angle.

Fixed lane display (2)

The fixed lane display (2) shows the path of the vehicle if the wheels are kept straight.

Guiding lines (A, B, C) are used together with the fixed lane display (2) and indicate the distance behind the vehicle.

The guiding line intervals are as follows:

A (red)	= 30 cm
B (yellow)	= 70 cm
C (green)	= 150 cm

Settings

Settings, e.g. brightness, can be set via the Infotainment system. Refer to Infotainment system manual for further information.

Deactivation

The camera is deactivated after a delay if reverse gear is not engaged.

Fault

The rear view camera may not operate properly when:

- the surrounding is dark,
- the sun or the beam of headlights is shining directly into the camera lens,
- ice, snow, mud, or anything else covers the camera lens. Clean the lens, rinse it with water, and wipe it with a soft cloth,
- the rear doors/tailgate are not closed correctly,
- the vehicle had a rear end accident,
- there are extreme temperature changes.

Fuel

Fuel for diesel engines

Only use diesel fuel that complies with EN 590. The fuel must have low sulphur content (max. 10 ppm). Equivalent standardised fuels with a biodiesel (= FAME according to EN14214) content of max. 7% by volume (like DIN 51628 or equivalent standards) may be used.

In countries outside the European Union, use Euro-Diesel fuel with a sulphur concentration below 50 ppm.

Caution

Use of fuel that does not comply to EN 590 or similar can lead to engine powerloss, increased wear or engine damage and loss of warranty.

Do not use marine diesel oils, heating oils, Aquazole and similar diesel-water emulsions. Diesel fuels must not be diluted with fuels for petrol engines.

The flow and filterability of diesel fuels are temperature-dependent. When temperatures are low, refuel with diesel fuel with guaranteed winter properties.

Diesel fuel filter ⇨ 146, diesel fuel system bleeding ⇨ 146.

Refuelling

⚠ Danger

Before refuelling, switch off engine and any external heaters with combustion chambers.

Vehicles with stop-start system: The engine must be switched off and the ignition key removed, to avoid risk of engine being restarted automatically by the system.

Switch off any mobile phones.

Follow the operating and safety instructions of the filling station when refuelling.

⚠ Danger

Fuel is flammable and explosive. No smoking. No naked flames or sparks.

If you can smell fuel in your vehicle, have the cause of this remedied immediately by a workshop.

Caution

In case of misfuelling, do not switch on ignition.

Note
To ensure the fuel level is displayed correctly, the ignition must be switched off before refuelling. Avoid minor fuel top-ups (e.g. less than 5 litres) to ensure accurate readings.

The fuel filler flap is located on the left-hand side of the vehicle.

The fuel filler flap can only be opened if the vehicle is unlocked and the left-hand door is opened.

Pull flap to open.

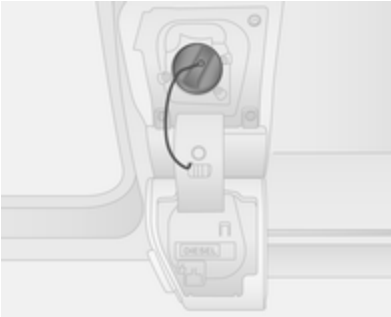

To open the fuel filler cap, turn anticlockwise.

The fuel filler cap can be retained in the bracket on the fuel filler flap.

For refuelling, fully insert the pump nozzle and switch it on.

After automatic cut-off, it can be topped up with max. two doses of fuel.

Caution
Wipe off any overflowing fuel immediately.

When refuelling is complete, replace the fuel filler cap and turn clockwise as far as it will go.

Close the fuel filler flap.

Fuel filler cap

Only use genuine fuel filler caps. Diesel-engined vehicles have special fuel filler caps.

Fuel consumption - CO_2-Emissions

The values for fuel consumption (combined) of the model Opel Vivaro is within a range of 7.4 to 5.7 l/100 km.

The CO_2 emission (combined) is within a range of 195 to 149 g/km.

For the values specific to your vehicle, refer to the EEC Certificate of Conformity provided with your vehicle or other national registration documents.

General information

The official fuel consumption and specific CO_2 emission figures quoted relate to the EU base model with standard equipment.

Fuel consumption data and CO_2 emission data are determined according to regulation R (EC) No. 715/2007 (in the latest applicable version), taking into consideration the vehicle weight in running order, as specified by the regulation.

The figures are provided only for the purpose of comparison between different vehicle variants and must not be taken as a guarantee for the actual fuel consumption of a particular vehicle.

Additional equipment may result in slightly higher results than the stated fuel consumption and CO_2 figures.

Furthermore, fuel consumption is dependent on personal driving style as well as road and traffic conditions.

Trailer hitch

General information

Entrust retrofitting of towing equipment to a workshop. It may be necessary to make changes that affect the cooling system, heat shields or other equipment. Only use towing equipment that has been approved for your vehicle.

Driving characteristics and towing tips

In the case of trailers with brakes, attach the breakaway stopping cable.

Before attaching a trailer, lubricate the coupling ball. However, do not do so if a stabiliser, which acts on the coupling ball, is being used to reduce snaking movements. For trailers with low driving stability the use of a stabiliser is recommended.

A maximum speed of 80 km/h must not be exceeded, even in countries where higher speeds are permitted.

If the trailer starts snaking, drive more slowly, do not attempt to correct the steering and brake sharply if necessary.

When driving downhill, drive in the same gear as if driving uphill and drive at a similar speed.

Adjust tyre pressure to the value specified for full load ⇨ 192.

Trailer towing

Trailer loads

The permissible trailer loads are vehicle and engine-dependent maximum values which must not be exceeded. The actual trailer load is the difference between the actual gross weight of the trailer and the actual coupling socket load with the trailer coupled.

The permissible trailer loads are specified in the vehicle documents. In general, they are valid for gradients up to max. 12 %.

The permitted trailer load applies up to the specified incline and up to an altitude of 1000 metres above sea level. Since engine power decreases as altitude increases due to the air becoming thinner, therefore reducing climbing ability, the permissible gross train weight also decreases by 10 % for every 1000 metres of additional altitude. The gross train weight does not have to be reduced when driving on roads with slight inclines (less than 8 %, e.g. motorways).

The permissible gross train weight must not be exceeded. This weight is specified on the identification plate ⇨ 179.

Vertical coupling load

The vertical coupling load is the load exerted by the trailer on the coupling ball. It can be varied by changing the weight distribution when loading the trailer.

The maximum permissible vertical coupling load is specified on the towing equipment identification plate and in the vehicle documents. Always aim for the maximum load, especially in the case of heavy trailers. The vertical coupling load should never fall below 25 kg.

In the case of trailer loads of 1200 kg or more, the vertical coupling load should not be less than 50 kg.

Rear axle load

When the trailer is coupled and the towing vehicle fully loaded (including all occupants), the permissible rear axle load (see identification plate or vehicle documents) must not be exceeded.

Trailer stability assist

If the system detects snaking movements, engine power is reduced and the vehicle/trailer combination is selectively braked until the snaking ceases. While the system is working, keep steering wheel as still as possible.

Trailer stability assist (TSA) is a function of the Electronic Stability Program ⇨ 125.

Vehicle care

General Information 138
Vehicle checks 139
Bulb replacement 147
Electrical system 152
Vehicle tools 156
Wheels and tyres 157
Jump starting 168
Towing 169
Appearance care 171

General Information

Accessories and vehicle modifications

We recommend the use of Genuine Parts and Accessories and factory approved parts specific for your vehicle type. We cannot assess or guarantee reliability of other products - even if they have a regulatory or otherwise granted approval.

Do not make any modifications to the electrical system, e.g. changes of electronic control units (chip tuning).

Caution
When transporting the vehicle on a train or on a recovery vehicle, the mud flaps might be damaged.

Vehicle storage

Storage for a long period of time

If the vehicle is to be stored for several months:

- Wash and wax the vehicle.
- Have the wax in the engine compartment and underbody checked.
- Clean and preserve rubber seals.
- Fill up fuel tank completely.
- Change the engine oil.
- Drain the washer fluid reservoir.
- Check the coolant antifreeze and corrosion protection.
- Adjust tyre pressure to the value specified for full load.
- Park vehicle in a dry, well ventilated place. Engage first or reverse gear. Prevent the vehicle from rolling.
- Do not apply the parking brake.

- Open the bonnet, close all doors and lock the vehicle.
- Disconnect the clamp from the negative terminal of the vehicle battery. Beware that all systems are not functional, e.g. anti-theft alarm system.

Putting back into operation

When the vehicle is to be put back into operation:

- Connect the clamp to the negative terminal of the vehicle battery. Activate the electronics of the power windows.
- Check tyre pressure.
- Fill up the washer fluid reservoir.
- Check the engine oil level.
- Check the coolant level.
- Fit the number plate, if necessary.

End-of-life vehicle recovery

Information on end-of-life vehicle recovery centres and the recycling of end-of-life vehicles is available on our website. Only entrust this work to an authorised recycling centre.

Vehicle checks

Performing work

⚠ Warning

Only perform engine compartment checks when the ignition is off.

The cooling fan may start operating even if the ignition is off.

⚠ Danger

The ignition system generates extremely high voltages. Do not touch.

The caps for topping up the engine oil, the coolant, the washer fluid and the oil dipstick handle are yellow for ease of identification.

Bonnet

Opening

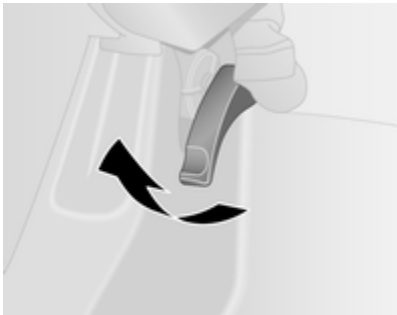

Pull the release lever and return it to its original position.

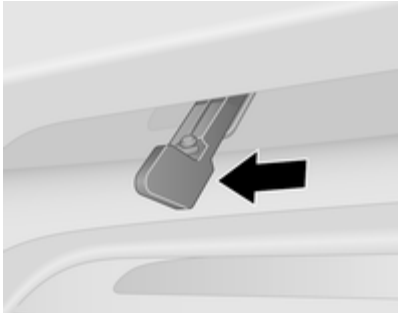

Move the safety catch (located slightly right of centre) sideways to the left and open the bonnet.

The bonnet is held open automatically.

If the bonnet is opened during an Autostop, the engine will be restarted automatically for safety reasons.

Stop-start system ⇨ 117.

Closing

Lower the bonnet and let it fall into the latch from a low height (approx. 30 cm). Check that the bonnet is engaged.

Engine oil

Check the engine oil level manually on a regular basis to prevent damage to the engine.

Ensure that the correct specification of oil is used. Recommended fluids and lubricants ⇨ 176.

Check with the vehicle on a level surface. The engine must be at operating temperature and switched off for at least 10 minutes.

Pull out the dipstick, wipe it clean, insert it to the stop on the handle, pull out and read the engine oil level.

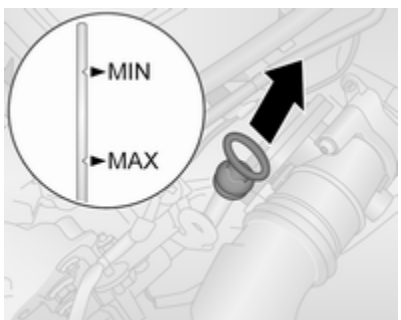

When the engine oil level has dropped to the **MIN** mark, top-up engine oil.

Caution
Do not allow the engine oil level to drop below the minimum level!

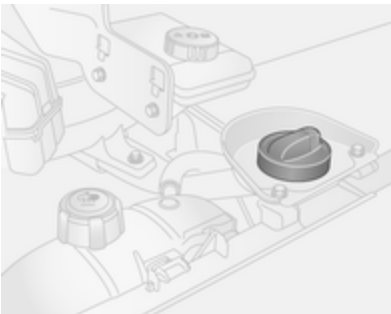

We recommend the use of the same grade of engine oil that was used at the last change.

The engine oil level must not exceed the maximum mark **MAX** on the dipstick.

Caution
Overfilled engine oil must be drained or suctioned out.

To prevent spillage when replenishing the engine oil, we recommend using a funnel. Ensure funnel is securely located onto the filler pipe.

A stabilization of the engine oil consumption will not take place until the vehicle has been driven several thousand kilometres. Only then can the actual degree of consumption be established.

If consumption exceeds more than 0.5 litres every 1000 km after this running-in period, consult a workshop.

Capacities ⇨ 191.

Fit the cap on straight and tighten it.

Engine air filter

Engine air flow indicator

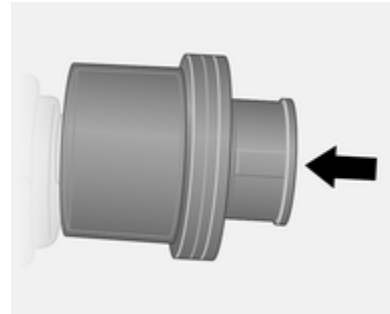

On certain models, an indicator is located in the engine induction system and indicates if the air-intake to the engine is restricted.

Clear	= No restriction
Red tell-tale	= Restricted

If the red tell-tale is displayed when the engine is running, consult a workshop.

Engine coolant

The coolant provides freeze protection down to approx. -28 °C.

Caution
Only use approved antifreeze.

Coolant level

Caution
Too low a coolant level can cause engine damage.

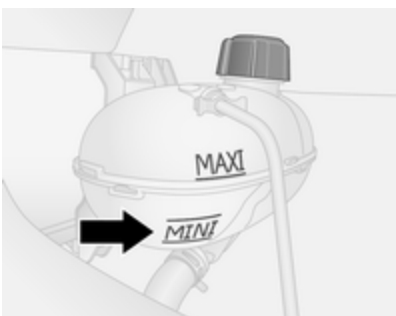

If the cooling system is cold, the coolant level should be just above the **MINI** mark. Top up if the level is low.

⚠Warning
Allow the engine to cool before opening the cap. Carefully open the cap, relieving the pressure slowly.

Top up with antifreeze. If no antifreeze is available, use clean tap water or distilled water. Install the cap tightly. Have the antifreeze concentration checked and have the cause of the coolant loss remedied by a workshop.

If a substantial amount of coolant is required, it will be necessary to bleed any trapped air from the cooling system. Seek the assistance of a workshop.

If the coolant temperature is too high, control indicator ⇨ 88 illuminates red in the instrument cluster, together with STOP ⇨ 86. Consult a workshop if coolant level is sufficient.

Power steering fluid

Caution
Extremely small amounts of contamination can cause steering system damage and cause it to not work properly. Do not allow contaminates to contact the fluid side of the reservoir cap or from entering the reservoir.

The power steering fluid reservoir is located below the front wheel arch, behind a trim panel.

The fluid level normally does not need to be checked. If an unusual noise is heard during steering or if the power steering reacts conspicuously, seek the assistance of a workshop.

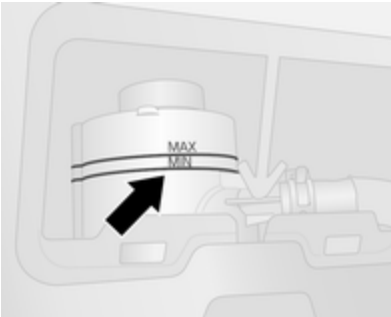

If the fluid level in the reservoir falls below the **MIN** mark consult a workshop.

Washer fluid

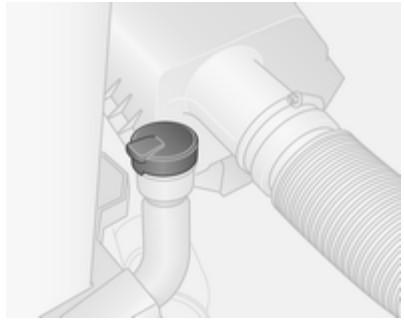

Fill with clean water mixed with a suitable quantity of windscreen washer fluid which contains antifreeze.

Caution
Only washer fluid with a sufficient antifreeze concentration provides protection at low temperatures or a sudden drop in temperature.

Brakes

A squealing noise indicates that the brake lining is at its minimum thickness. Continued driving is possible but have the brake lining replaced as soon as possible.

Once new brake linings are installed, do not brake unnecessarily hard for the first few journeys.

Brake fluid

⚠Warning
Brake fluid is poisonous and corrosive. Avoid contact with eyes, skin, fabrics and painted surfaces.

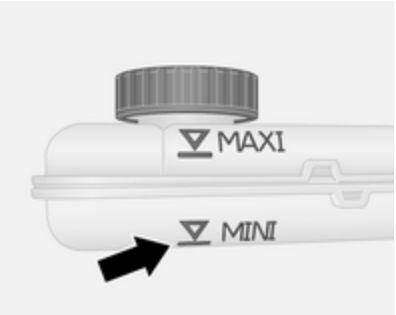

The brake fluid level must be between the **MINI** and **MAXI** marks.

When topping up, ensure maximum cleanliness as contamination of the brake fluid can lead to brake system malfunctions. Have the cause of the loss of brake fluid remedied by a workshop.

Only use high-performance brake fluid approved for your vehicle.

Brake fluid ⇨ 176.

Vehicle battery

The vehicle is equipped with a lead acid battery. Vehicles with stop-start system will be equipped with an AGM (Absorptive Glass Mat) battery which is not a lead acid battery.

The vehicle battery is maintenance-free provided that the driving profile allows sufficient charging of the battery. Short-distance driving and frequent engine starts can discharge the battery. Avoid the use of unnecessary electrical consumers.

Batteries do not belong in household waste. They must be disposed of at an appropriate recycling collection point.

Laying up the vehicle for more than 4 weeks can lead to battery discharge. Disconnect the clamp from the negative terminal of the vehicle battery.

Ensure the ignition is switched off before connecting or disconnecting the vehicle battery.

Replacing the vehicle battery

In vehicles with stop-start system, be sure to have the AGM (Absorptive Glass Mat) battery replaced with another AGM battery.

An AGM battery can be identified by the label on the battery. We recommend the use of an original Opel battery.

Note
Using an AGM vehicle battery different from the original Opel vehicle battery may result in a lower performance of the stop-start system.

We recommend that you have the vehicle battery replaced by a workshop.

Stop-start system ⇨ 117.

Charging the vehicle battery

⚠ Warning

On vehicles with stop-start system, ensure that the charging potential does not exceed 14.6 volts when using a battery charger. Otherwise the vehicle battery might be damaged.

⚠ Danger

Ensure adequate ventilation when charging the battery. There is a risk of explosion if gases generated during charging are allowed to accumulate!

Jump starting ⇨ 168.

Warning label

Meaning of symbols:

- No sparks, naked flames or smoking.
- Always shield eyes. Explosive gases can cause blindness or injury.
- Keep the vehicle battery out of reach of children.
- The vehicle battery contains sulfuric acid which could cause blindness or serious burn injuries.
- See the Owner's Manual for further information.
- Explosive gas may be present in the vicinity of the battery.

Diesel fuel filter

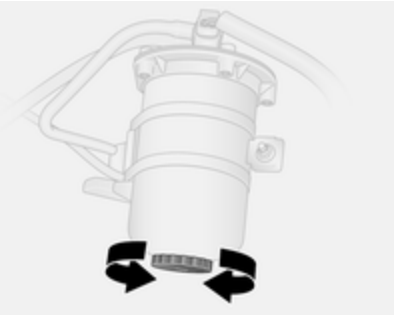

Drain diesel fuel filter of residual water at every engine oil change.

Place a container underneath the filter housing. Loosen the knurled screw on the lower part of the filter by approx. one turn, to drain off the water.

The filter is drained as soon as water-free diesel fuel emerges. Retighten the screw.

Check diesel fuel filter at shorter intervals if the vehicle is subjected to extreme operating conditions.

Diesel fuel system bleeding

If the fuel tank has been run dry, it will be necessary to air vent or bleed the diesel fuel system.

Refuel then proceed as follows:

With ignition key

- Switch on the ignition (key to position **M**) for 5 seconds at a time.
- Switch off ignition (key to position **A**) for 3 seconds.
- Repeat this process multiple times.
- Start the engine (key to position **D**) then switch off (key to position **St**).

Ignition switch positions ⇨ 114.

With power button

- Insert the electronic key in the card reader.
- Press the **Start/Stop** button without pressing any of the pedals.
- Wait a few minutes before starting engine.

Power button ⇨ 114.

If the engine fails to start, seek the assistance of a workshop.

Starting the engine ⇨ 116.

Wiper blade replacement

Wiper blades on the windscreen

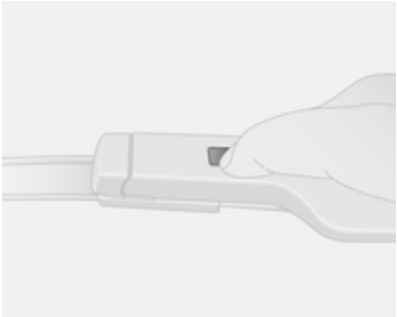

Lift the wiper arm, press button to disengage the wiper blade and remove.

Attach new wiper blade slightly angled to the wiper arm and push until it engages.

Lower wiper arm carefully.

Wiper blade on the rear window

Lift wiper arm, rotate wiper blade and detach.

Bulb replacement

Switch off the ignition and turn off the relevant switch or close the doors.

Only hold a new bulb at the base. Do not touch the bulb glass with bare hands.

Use only the same bulb type for replacement.

Bulb check

After a bulb replacement, switch on the ignition, operate and check the lights.

Headlights

Low beam and high beam

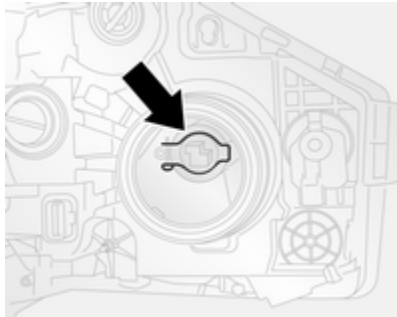

1. Remove protective cover by rotating it anticlockwise.
2. Remove harness connector.
3. Release retaining clip and remove bulb.
4. Renew bulb and install retaining clip ensuring that bulb is in correct orientation.
5. Install harness connector and protective cover.

Sidelights

1. Remove bulb holder from reflector housing by rotating it anticlockwise.
2. Renew bulb.
3. Install bulb holder in reflector housing.

Fog lights

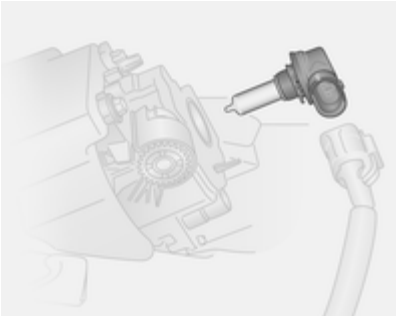

Access the front fog light bulb from beneath the vehicle.

1. On left vehicle side, release retaining clip and open the access cover.

   On right vehicle side, remove screws and retaining clips to remove the access cover.
2. Remove harness connector.
3. Rotate bulb holder anticlockwise and remove bulb.
4. Renew bulb and install bulb holder.
5. Install harness connector and access cover.

Front turn signal lights

1. Remove bulb holder from reflector housing by rotating anticlockwise.
2. Renew bulb.
3. Install bulb holder in reflector housing.

Tail lights

Rear brake, turn signal and tail lights

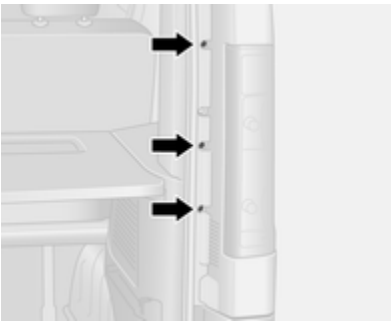

1. Remove the 3 screws (using the tool supplied).
2. Carefully pull lamp assembly from retaining pins on the outer side and remove.

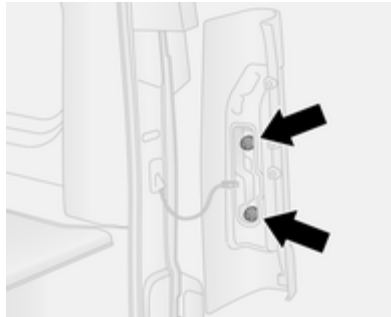

3. Rotate bulb holder anticlockwise to separate from lamp assembly.
4. Renew bulb.
5. Push to install the bulb holder into the lamp assembly, then rotate clockwise to secure.
6. Check that the wiring harness is located correctly.
7. Replace lamp assembly into original position, ensuring that it is seated correctly.
8. Fit lamp assembly onto retaining pins and replace the 3 screws.

Side turn signal lights

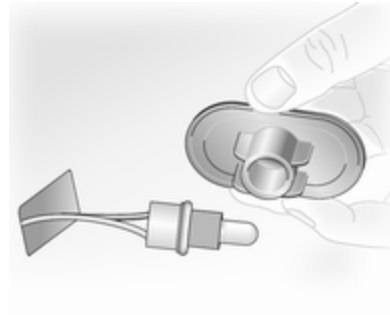

1. Release clips from fender using a flat blade screwdriver and lift out lamp assembly from aperture.
2. Remove bulb holder from lamp assembly by rotating anticlockwise and renew bulb.
3. Install bulb holder in lamp assembly and install lamp assembly into aperture.

Centre high-mounted brake light

1. Open the rear doors/tailgate.

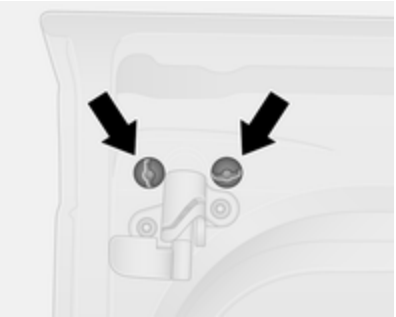

2. Remove the 2 bolts from inside the rear doors/tailgate.

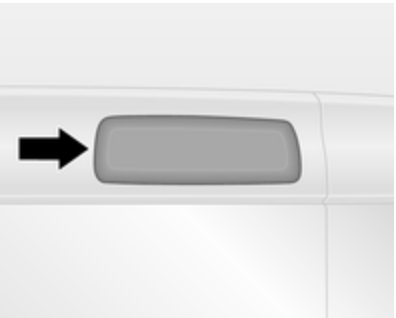

3. From outside the vehicle, remove the bulb holder by releasing the clips with a flat blade screwdriver.
4. Renew bulb.
5. Install bulb holder and replace the 2 bolts.

Reversing light

1. Remove the 2 screws (using the tool supplied) and remove lamp assembly.
2. Rotate bulb housing anticlockwise to separate from lamp assembly.
3. Renew lower bulb.
4. Push to install the bulb holder into the lamp assembly, then rotate clockwise to secure.
5. Install lamp assembly with the 2 screws.

Number plate light

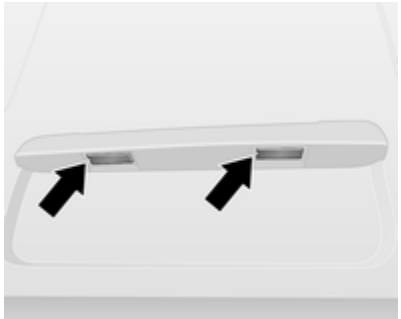

1. Prise out lamp using a flat blade screwdriver.
2. Prise off lens.
3. Renew bulb.
4. Install lens and replace lamp in housing.

Fog tail light

1. Remove the 2 screws (using the tool supplied) and remove lamp assembly.
2. Rotate bulb housing anticlockwise to separate from lamp assembly.
3. Renew upper bulb.
4. Push to install the bulb holder into the lamp assembly, then rotate clockwise to secure.
5. Install lamp assembly with the 2 screws.

Interior lights

Front and rear courtesy lights

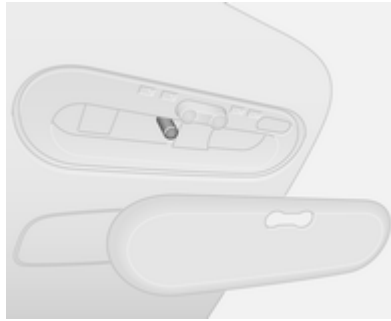

1. Remove lens assembly using a flat blade screwdriver.
2. Renew bulb.
3. Install lens assembly.

Load compartment light

1. Remove lamp assembly using a flat blade screwdriver.
2. Remove rear cover on lamp assembly.
3. Renew bulb.
4. Install rear cover and lamp assembly.

Glovebox light

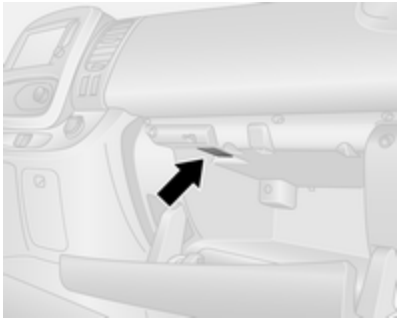

1. Remove lens assembly using a flat blade screwdriver.
2. Renew bulb.
3. Install lens assembly.

Instrument panel illumination

Have bulbs replaced by a workshop.

Electrical system

Fuses

Data on the replacement fuse must match the data on the defective fuse.

Before replacing a fuse, turn off the respective switch and the ignition.

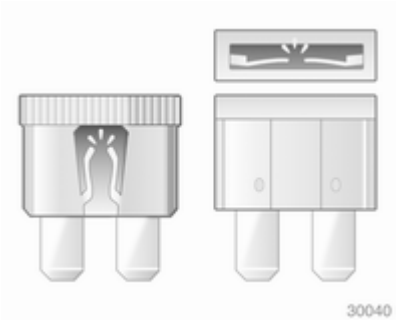

A blown fuse can be recognised by its melted wire. Do not replace the fuse until the cause of the fault has been remedied.

It is advisable to carry a full set of fuses. Provision is made in the fuse box for the storing of spare fuses.

Some functions are protected by several fuses.

Fuses may also be inserted without existence of a function.

Note
Not all fuse box descriptions in this Owner's Manual may apply to your vehicle. Refer to the fuse box label, where fitted.

Fuse extractor

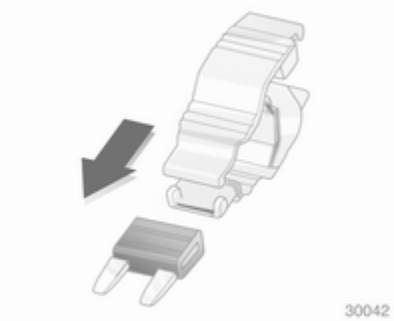

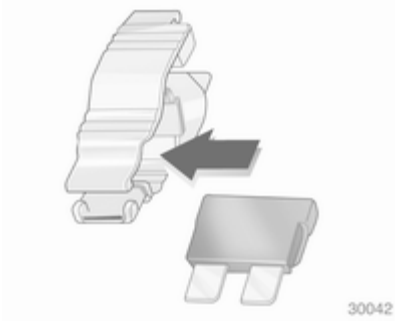

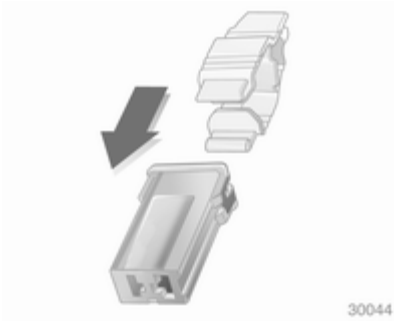

To help in replacing fuses, a fuse extractor may be used.

Place the fuse extractor on the various types of fuse from the top or side, and withdraw fuse.

Instrument panel fuse box

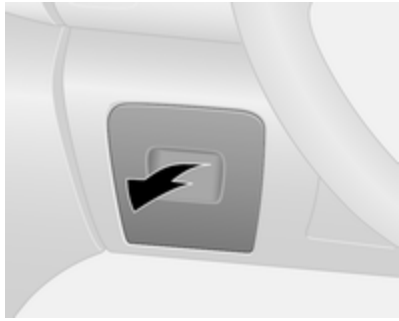

The fuse box is located on the left-hand side of the instrument panel, behind a trim panel.

Pull upper part of trim panel and remove to access the fuse box.

Do not store any objects behind this panel.

Some circuits may be protected by several fuses.

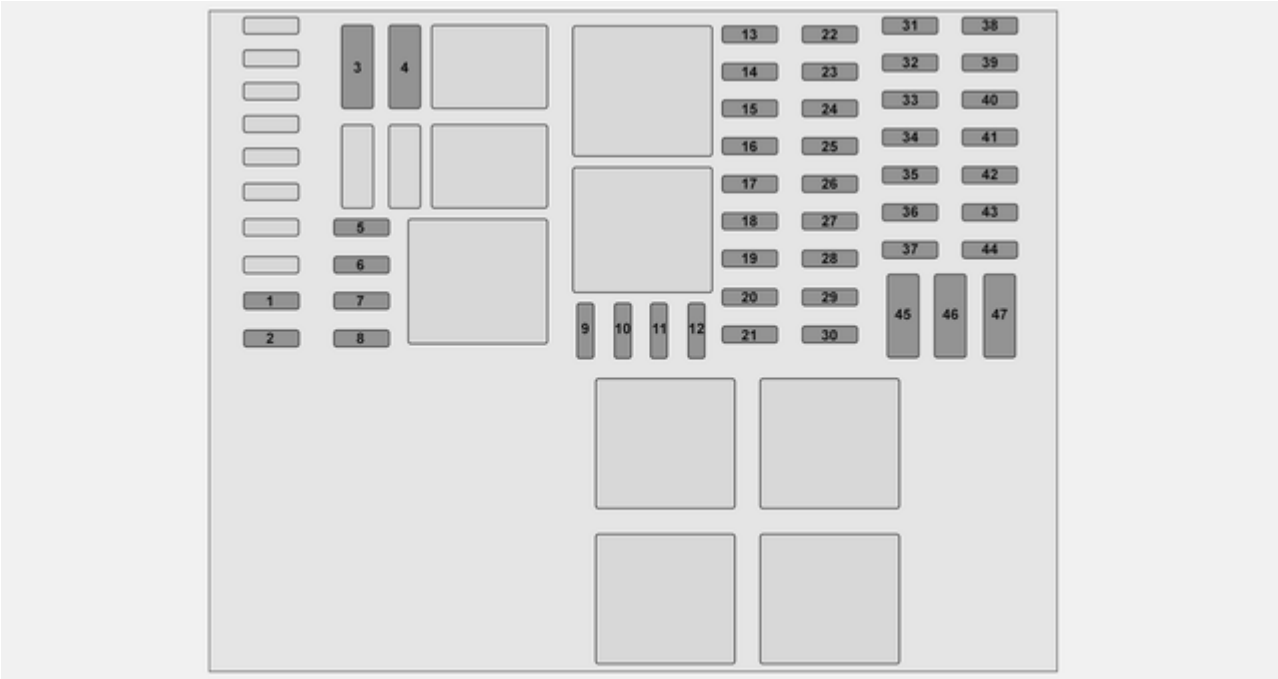
1
2
3
4
5
6
7
8
9
10
11
12
13
14
15
16
17
18
19
20
21
22
23
24
25
26
27
28
29
30
31
32
33
34
35
36
37
38
39
40
41
42
43
44
45
46
47

No.	Circuit
1	Vehicle battery (with electronic key system)
2	APC battery backup (with electronic key system)
3	Heating and ventilation system
4	Adaptations
5	Adaptations
6	Heating and ventilation system
7	Additional heating and ventilation, air conditioning system
8	Supplementary heating and ventilation system
9	Electric exterior mirrors, additional adaptations
10	Heated exterior mirrors
11	Radio, multimedia, electric exterior mirrors, diagnostic socket
12	Multimedia, trailer hitch
13	Courtesy lights, battery discharge protection
14	Fuel injection system, tyre pressure monitoring system, electronic key system
15	Hazard warning flashers, turn and lane-change signals
16	Central locking
17	Left-hand high beam, right-hand low beam, tail lights, left-hand daytime running light
18	Front fog lights, rear fog lights, number plate lighting
19	Alarm, horn, lighting, wiper
20	Instrument cluster
21	Light switch
22	Rear window wiper, windscreen washer pump, horn
23	APC general battery
24	Reversing lights
25	Brake switch
26	Fuel injection, starter
27	Airbag, steering column lock
28	Passenger power window
29	Power steering
30	Brake lights
31	APC battery backup (with electronic key system)
32	Service display
33	Cigarette lighter, power outlet
34	Right-hand high beam, left-hand low beam, sidelights, right-hand daytime running light
35	Brake lights, ABS, immobiliser
36	Interior lighting, air conditioning
37	Starting with electronic key system
38	Rear window wiper

No.	Circuit
39	Warning chimes
40	Load compartment power outlet
41	Driver power window
42	Rear power outlet
43	Starting, body control module
44	Heated seats
45	Heating, air conditioning
46	Windscreen wiper
47	Tachograph

Vehicle tools

Tools

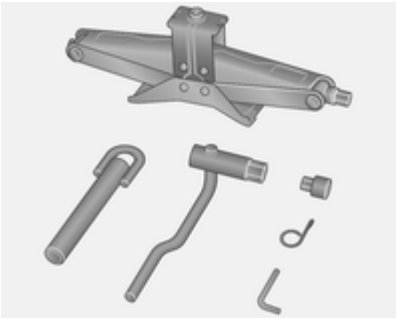

The jack, wheel wrench, wheel bolt sleeve, torx key, adapters, wheel cover hook, towing eye are contained in a unit, stowed under the driver's seat.

Slide seat forwards and fold the backrest forwards ⇨ 45 to access the tool box. The tool box may be secured in position with a wing nut.

Wheel changing ⇨ 165, Spare wheel ⇨ 166.

Vehicles with tyre repair kit: The wheel cover hook and torx key are stored within the tyre repair kit case, stowed under the driver's seat.

Tyre repair kit ⇨ 162.

Wheels and tyres

Tyre condition, wheel condition

Drive over edges slowly and at right angles if possible. Driving over sharp edges can cause tyre and wheel damage. Do not trap tyres on the kerb when parking.

Regularly check the wheels for damage. Seek the assistance of a workshop in the event of damage or unusual wear.

We recommend not swapping the front wheels with the rear wheels and vice versa, as this can affect vehicle stability. Always use less worn tyres on the rear axle.

Tyres

Factory-fitted tyres are matched to the chassis and offer optimum driving comfort and safety.

Winter tyres

Winter tyres improve driving safety at temperatures below 7 °C and should therefore be fitted on all wheels.

In accordance with country-specific regulations, a notice indicating the maximum permissible speed for the tyres must be affixed within the driver's field of vision.

Tyre designations

E.g. **195/65 R 16 C 88 Q**

195 = Tyre width, mm
65 = Cross-section ratio (tyre height to tyre width), %
R = Belt type: Radial
RF = Type: RunFlat
16 = Wheel diameter, inches
C = Cargo or commercial use
88 = Load index e.g. 88 is equivalent to 567 kg
Q = Speed code letter

Speed code letter:

Q = up to 160 km/h
S = up to 180 km/h
T = up to 190 km/h
H = up to 210 km/h
V = up to 240 km/h
W = up to 270 km/h

Directional tyres

Fit directional tyres such that they roll in the direction of travel. The rolling direction is indicated by a symbol (e.g. an arrow) on the sidewall.

Tyre pressure

Check the pressure of cold tyres at least every 14 days and before any long journey. Do not forget the spare wheel. This also applies to vehicles with tyre pressure monitoring system.

Tyre pressures ⇨ 192. Always inflate tyres to the pressures shown on the label on the driver's door frame.

The tyre pressure data refers to cold tyres. It applies to summer and winter tyres.

Always inflate the spare tyre to the pressure specified for full load.

Incorrect tyre pressures will impair safety, vehicle handling, comfort and fuel economy and will increase tyre wear.

Tyre pressures differ depending on various options. For the correct tyre pressure value, follow the procedure below:

1. Identify the engine identifier code. Engine data ⇨ 182.
2. Identify the respective tyre.

The tyre pressure tables show all possible tyre combinations ⇨ 192.

For the tyres approved for your vehicle, refer to the EEC Certificate of Conformity provided with your vehicle or other national registration documents.

The driver is responsible for correct adjustment of tyre pressure.

⚠ Warning

If the pressure is too low, this can result in considerable tyre warm-up and internal damage, leading to tread separation and even to tyre blow-out at high speeds.

Tyre pressure monitoring system

The Tyre Pressure Monitoring System (TPMS) uses radio and sensor technology to check tyre pressure levels.

Caution

Tyre pressure monitoring system warns only about low tyre pressure condition and does not replace regular tyre maintenance by the driver.

All wheels must be equipped with pressure sensors and the tyres must have the prescribed pressure.

Note
In countries where the tyre pressure monitoring system is legally required, the use of wheels without pressure sensors will invalidate the vehicle type approval.

The TPMS sensors monitor the air pressure in the tyres and transmit tyre pressure readings to a receiver located in the vehicle.

Tyre pressures in display

The current tyre pressures can be shown in the Driver Information Centre ⇨ 90.

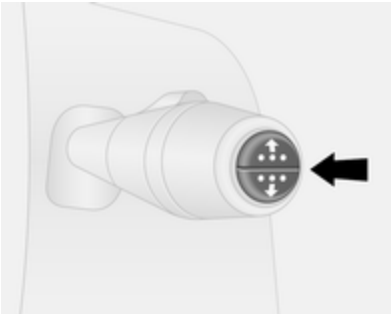

With the vehicle stationary, press button on end of wiper lever repeatedly until the tyre pressure menu is displayed.

Low tyre pressure condition

A detected low tyre pressure condition is indicated by illumination of control indicator ⓘ ⇨ 88 and a corresponding message appears in the Driver Information Centre.

If ⓘ illuminates, stop as soon as possible and inflate the tyres as recommended ⇨ 192.

After inflating, some driving may be required to update the tyre pressure values in the Driver Information Centre. During this time ⓘ may illuminate.

If ⓘ illuminates at lower temperatures and extinguishes after some driving, this could be an indicator for getting low pressure. Check tyre pressure.

If the tyre pressure must be reduced or increased, switch off ignition.

Only mount wheels with pressure sensors, otherwise the tyre pressure will not be displayed and ⓘ flashes for several seconds then illuminates continuously together with control indicator ⇨ 86 and a corresponding message appears in the Driver Information Centre.

A spare wheel or temporary spare wheel is not equipped with pressure sensors. TPMS is not operational for these wheels. For the further three wheels, TPMS remains operational.

Control indicator ⓘ and the corresponding message appears at each ignition cycle until the tyres are inflated to the correct tyre pressure.

Driver Information Centre ⇨ 90.

Vehicle messages ⇨ 91.

Puncture

A puncture or severely under-inflated tyre is indicated by illumination of control indicator (!) together with STOP ⇨ 86 and a corresponding message appears in the Driver Information Centre. Stop vehicle and switch off engine.

Tyre pressure ⇨ 192, Tyre repair kit ⇨ 162, Spare wheel ⇨ 166, Wheel changing ⇨ 165.

Temperature dependency

Tyre pressure depends on the temperature of the tyre. During driving, tyre temperature and pressure increase.

The tyre pressure value displayed in the Driver Information Centre shows the actual tyre pressure. Therefore it is important to check tyre pressure with cold tyres.

Relearn function

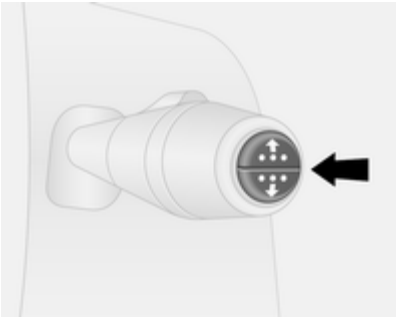

After changing the wheels, TPMS needs to recalculate.

With the vehicle stationary, select the tyre pressure menu in the Driver Information Centre by pressing button on end of wiper lever. Press and hold button for approx. 3 seconds to initialise recalculation. A corresponding message appears in the Driver Information Centre.

Several minutes of driving may be required to complete the relearn process.

If problems occur during the relearn process, control indicator (!) remains illuminated and a warning message is displayed in the Driver Information Centre.

Driver Information Centre ⇨ 90.

Vehicle messages ⇨ 91.

General information

The use of commercially available liquid tyre repair kits can impair the function of the system. Factory-approved tyre repair kits can be used.

Tyre repair kit ⇨ 162.

External high-power radio equipment could disrupt the tyre pressure monitoring system.

Each time the tyres are replaced, TPMS sensors must be dismounted and serviced by a workshop.

Tread depth

Check tread depth at regular intervals.

Tyres should be replaced for safety reasons at a tread depth of 2-3 mm (4 mm for winter tyres).

For safety reasons it is recommended that the tread depth of the tyres on one axle should not vary by more than 2 mm.

The legally permissible minimum tread depth (1.6 mm) has been reached when the tread has worn down as far as one of the tread wear indicators (TWI). Their position is indicated by markings on the sidewall.

Tyres age, even if they are not used. We recommend tyre replacement every 6 years.

Changing tyre and wheel size

If tyres of a different size than those fitted at the factory are used, it may be necessary to reprogramme the speedometer as well as the nominal tyre pressure and make other vehicle modifications.

After converting to a different tyre size, have the label with tyre pressures replaced.

⚠ Warning

Use of unsuitable tyres or wheels may lead to accidents and will invalidate the vehicle type approval.

Wheel covers

Wheel covers and tyres that are factory approved for the respective vehicle and comply with all of the relevant wheel and tyre combination requirements must be used.

If the wheel covers and tyres used are not factory approved, the tyres must not have a rim protection ridge.

Wheel covers must not impair brake cooling.

⚠ Warning

Use of unsuitable tyres or wheel covers could lead to sudden pressure loss and thereby accidents.

Tyre chains

Tyre chains are only permitted on the front wheels.

Always use fine mesh chains that add no more than 15 mm to the tyre tread and the inboard sides (including chain lock).

For tyre size 215/60 R17, consult a workshop.

⚠Warning
Damage may lead to tyre blowout.

Wheel covers on steel wheels may come into contact with parts of the chains. In such cases, remove the wheel covers.

Tyre chains may only be used at speeds up to 50 km/h and, when travelling on roads that are free of snow, they may only be used for brief periods since they are subject to rapid wear on a hard road and may snap.

The use of tyre chains is not permitted on the temporary spare wheel.

Tyre repair kit

Minor damage to the tyre tread or sidewall can be repaired with the tyre repair kit.

Do not remove foreign bodies from the tyres.

Tyre damage exceeding 4 mm or that is at tyre sidewall near the rim cannot be repaired with the tyre repair kit.

⚠Warning
Do not drive faster than 80 km/h. Do not use for a lengthy period. Steering and handling may be affected.

If the vehicle has a flat tyre:

Apply the parking brake and engage first gear or reverse gear.

The tyre repair kit is located under the driver's seat. Vehicle tools ⇨ 156.

1. Remove the compressor and sealant bottle from the tyre repair kit case.
2. Remove the electrical connection cable and air hose from the compartments on the underside of the compressor.

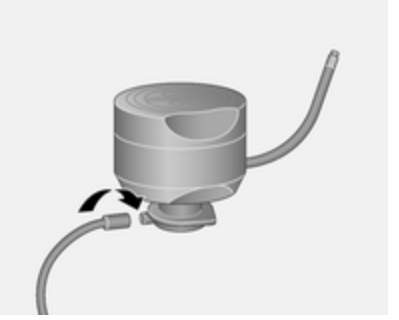

3. Screw the air hose to the connection on the sealant bottle.
4. Fit the sealant bottle into the retainer on the compressor.

   Set the compressor near the tyre in such a way that the sealant bottle is upright.
5. Unscrew valve cap from defective tyre.

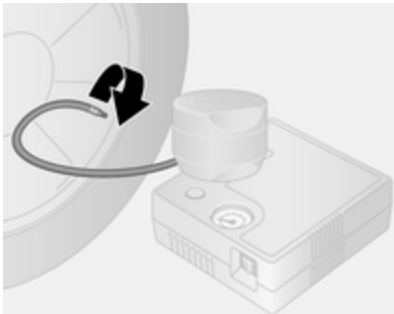

6. Screw the filler hose to the tyre valve.
7. The switch on the compressor must be set to **O**.
8. Connect the electrical connection cable to the power outlet or cigarette lighter socket.

   To avoid discharging the vehicle battery, we recommend running the engine.

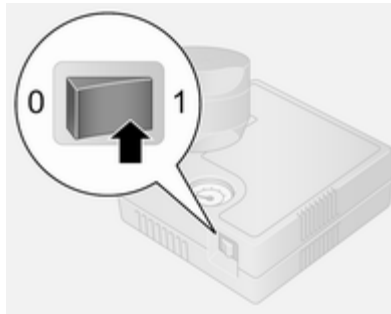

9. Set the rocker switch on the compressor to **I**. The tyre is filled with sealant.
10. The compressor pressure gauge briefly indicates up to 6 bar (600 kPa/87 psi). Then the pressure starts to drop.
11. All of the sealant is pumped into the tyre. Then the tyre is inflated.

12. The prescribed tyre pressure should be obtained within 15 minutes. Tyre pressure ⇨ 192. When the correct pressure is obtained, switch off the compressor.

    If the prescribed tyre pressure is not obtained within 15 minutes, remove the tyre repair kit. Move the vehicle one tyre rotation (approx. 2 metres). Reattach the tyre repair kit and continue the filling procedure for 15 minutes. If the prescribed tyre pressure is still not obtained, the tyre is too badly

damaged. Seek the assistance of a workshop.

Drain excess tyre pressure with the button beside the pressure indicator.

Do not run the compressor for longer than 15 minutes.

13. Detach the tyre repair kit.
14. Remove any excess sealant using a cloth.
15. Take the label indicating maximum permitted speed from the tyre repair kit and affix in the driver's field of view.
16. Store the sealant bottle in the plastic bag. Return tyre repair kit to case and stow under the driver's seat.

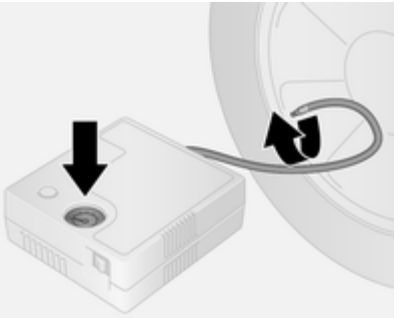

17. Continue driving immediately so that the sealant is evenly distributed throughout the tyre. After driving approx. 10 km, but no more than 10 minutes, stop and check tyre pressure using the compressor. Screw air hose from compressor directly onto tyre valve when doing this.
18. If the tyre pressure is more than 2.2 bar (220 kPa/31 psi), set it to the correct value. Repeat the procedure until there is no more loss of pressure.

    If the tyre pressure has fallen below 2.2 bar (220 kPa/31 psi), the vehicle must not be driven. Seek the assistance of a workshop.
19. Detach the tyre repair kit, return to case and stow under the driver's seat.

⚠ Warning

Do not allow the sealant to contact skin, eyes or clothing. If swallowed seek medical assistance immediately.

Note

The driving characteristics of the repaired tyre is severely affected, therefore have this tyre replaced.

If unusual noise is heard or the compressor becomes hot, turn compressor off for at least 30 minutes.

Pay attention to storage information and expiry date on sealant bottle. Its sealing capability is not guaranteed after this time.

Replace the used sealant bottle. Dispose of the sealant bottle as prescribed by applicable laws.

Wheel changing

Some vehicles are equipped with a tyre repair kit instead of a spare wheel ⇨ 162.

Make the following preparations and observe the following information:

- Park the vehicle on a level, firm and non-slippery surface. The front wheels must be in the straight-ahead position.
- Apply the parking brake and engage first gear or reverse gear.
- Remove the spare wheel ⇨ 166.
- Never change more than one wheel at a time.
- Use the jack only to change wheels in case of puncture, not for a seasonal winter or summer tyre change.
- If the ground on which the vehicle is standing is soft, a solid board (max. 1 cm thick) should be placed under the jack.
- Take heavy objects out of the vehicle before jacking up.
- No people or animals may be in the vehicle when it is jacked-up.
- Never crawl under a jacked-up vehicle.
- Do not start the engine when the vehicle is raised on the jack.

1. Remove the wheel cover (using the hook supplied). Vehicle tools ⇨ 156.

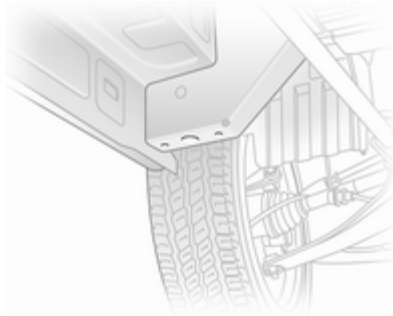

2. Loosen each of the wheel bolts by half a turn using the wheel wrench. Ensure the wrench locates securely. The wrench should turn anticlockwise to loosen the bolts. Invert the wrench if necessary.

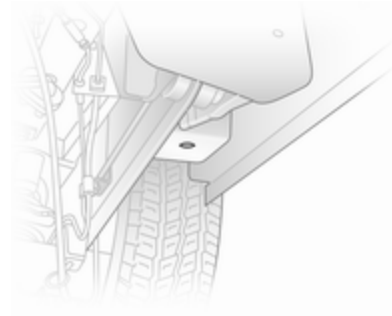

3. Place lifting pad spigot of the jack under the jacking hole located nearest the wheel concerned.

   Ensure the jack is positioned correctly. The jack base must be on the ground directly below the jacking hole in a manner that prevents it from slipping.
4. Install wrench onto the jack and raise the vehicle by turning the wrench until the wheel is clear of the ground.

5. Unscrew wheel bolts completely by turning anticlockwise and wipe clean with a cloth.

   Put wheel bolts somewhere where the threads will not be soiled.
6. Change the wheel. Spare wheel ⇨ 166.
7. Screw in the wheel bolts.
8. Lower the vehicle and remove jack.
9. Tighten each of the wheel bolts in a crosswise sequence using the wheel wrench. Ensure the wrench locates securely. The wrench should turn clockwise to tighten the bolts. Invert the wrench if necessary.

   Tightening torque is 160 Nm.
10. Replace the wheel cover, ensuring that the valve hole in the wheel cover is aligned with the tyre valve before installing.

   Note
   If applicable, fit anti-theft bolts nearest the tyre valve (otherwise it may not be possible to refit the wheel cover).
11. Stow the replaced wheel ⇨ 166 and the vehicle tools ⇨ 156.
12. Have the new wheel balanced on the vehicle.

   Check the tyre pressure of the installed tyre ⇨ 192.

   Check the wheel bolt torque.

Have the defective tyre renewed or repaired as soon as possible.

Spare wheel

Some vehicles are equipped with a tyre repair kit instead of a spare wheel ⇨ 162.

If mounting a spare wheel which is different from the other wheels, this wheel might be classified as a temporary spare wheel and the corresponding speed limits apply, even though no label indicates this. Seek the assistance of a workshop to check the applicable speed limit.

Caution
The use of a spare wheel that is smaller than the other wheels or in combination with winter tyres could affect driveability. Have the defective tyre replaced as soon as possible.

It may be necessary to jack the vehicle up to gain access to the spare wheel on a fully loaded vehicle with a flat rear tyre.

Wheel changing ⇨ 165.

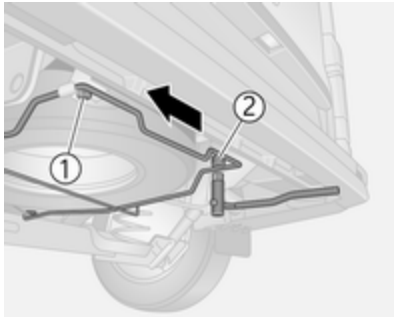

The spare wheel is mounted under the rear underbody and may be secured using a security bolt that can only be removed using the wheel bolt sleeve supplied. Vehicle tools ⇨ 156.

⚠Warning

Due to the weight of the tyre assembly, exercise caution when releasing the spare wheel carrier. Do not fully remove bolt **1**.

Support the spare wheel with a suitable object to prevent the wheel falling suddenly when loosening the carrier bolts - risk of injury!

To release the spare wheel carrier, loosen bolt **1**, ensuring it is not fully removed. Fully remove bolt **2**, then pull the carrier to the left, until it clears bolt **1**, and lower the carrier assembly.

When installing the wheel ensure that the spare wheel carrier is correctly positioned before tightening the bolts.

Summer and winter tyres

If you use winter tyres, the spare wheel may still be fitted with a summer tyre.

If you use the spare wheel when it is fitted with a summer tyre the vehicle's driveability may be affected, especially on slippery road surfaces.

Directional tyres

Fit directional tyres such that they roll in the direction of travel. The rolling direction is indicated by a symbol (e.g. an arrow) on the sidewall.

The following applies to tyres fitted opposing the rolling direction:

- Driveability may be affected. Have the defective tyre renewed or repaired as soon as possible.
- Do not drive faster than 80 km/h.
- Drive particularly carefully on wet and snow-covered road surfaces.

Jump starting

Do not start with a quick charger.

A vehicle with a discharged battery can be started using jump leads and the vehicle battery of another vehicle.

⚠Warning

Be extremely careful when starting with jump leads. Any deviation from the following instructions can lead to injuries or damage caused by battery explosion or damage to the electrical systems of both vehicles.

⚠Warning

Avoid contact of the battery with eyes, skin, fabrics and painted surfaces. The fluid contains sulphuric acid which can cause injuries and damage in the event of direct contact.

- Never expose the battery to naked flames or sparks.
- A discharged vehicle battery can already freeze at a temperature of 0 °C. Defrost the frozen battery before connecting jump leads.
- Wear eye protection and protective clothing when handling a battery.
- Use a booster battery with the same voltage (12 volts). Its capacity (Ah) must not be much less than that of the discharged battery.
- Use jump leads with insulated terminals and a cross section of at least 16 mm^2 (25 mm^2 for diesel engines).
- Do not disconnect the discharged vehicle battery from the vehicle.
- Switch off all unnecessary electrical consumers.
- Do not lean over the battery during jump starting.
- Do not allow the terminals of one lead to touch those of the other lead.
- The vehicles must not come into contact with each other during the jump starting process.
- Apply the parking brake, transmission in neutral.
- Open the positive terminal protection caps of both batteries.

The battery is located in the engine compartment.

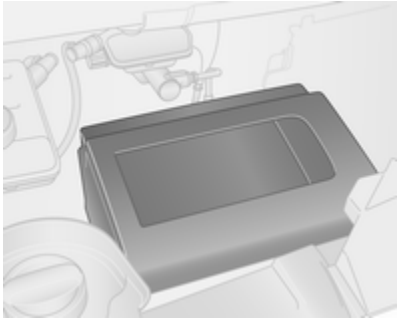

Remove cover to access the battery.

Lead connection order:

1. Connect the red lead to the positive terminal (1) of the booster battery.
2. Connect the other end of the red lead to the positive terminal (2) of the discharged battery.
3. Connect the black lead to the negative terminal (3) of the booster battery.
4. Connect the other end of the black lead to a vehicle grounding point (4), such as the engine block or an engine mounting bolt. Connect as far away from the discharged vehicle battery as possible, however at least 60 cm.

Route the leads so that they cannot catch on rotating parts in the engine compartment.

To start the engine:

1. Start the engine of the vehicle providing the jump start.
2. After 5 minutes, start the other engine. Start attempts should be made for no longer than 15 seconds at an interval of 1 minute.
3. Allow both engines to idle for approx. 3 minutes with the leads connected.
4. Switch on electrical consumers (e.g. headlights, heated rear window) of the vehicle receiving the jump start.
5. Reverse above sequence exactly when removing leads.

Towing

Towing the vehicle

The towing eye is stowed with the vehicle tools ⇨ 156.

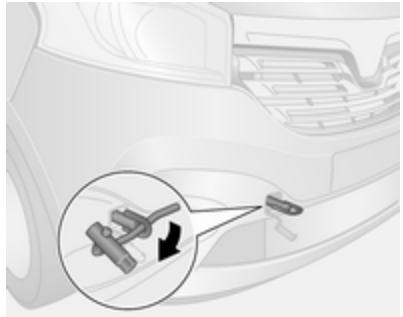

Release cap using a suitable tool.

Screw the towing eye clockwise into the front towing point and tighten fully using the wheel wrench.

Attach a tow rope - or better still a tow rod - to the towing eye, never to the bumper or front suspension units.

Caution

Do not tow the vehicle from the rear. The front towing eye must only be used for towing and not recovering a vehicle.

Caution

Activate the child locks in the rear doors if the rear seats are occupied. Child locks ⇨ 30.

Switch on ignition to permit operation of brake lights, horn and windscreen wipers, and move the steering wheel slightly to release the steering wheel lock.

Transmission in neutral.

Caution

Drive slowly. Do not drive jerkily. Excessive tractive force can damage the vehicle.

When the engine is not running, considerably more force is needed to brake and steer.

To prevent the entry of exhaust fumes from the towing vehicle, switch on the air recirculation system ⇨ 102 and close the windows.

Seek the assistance of a workshop.

After towing, unscrew the towing eye and replace cap.

Towing another vehicle

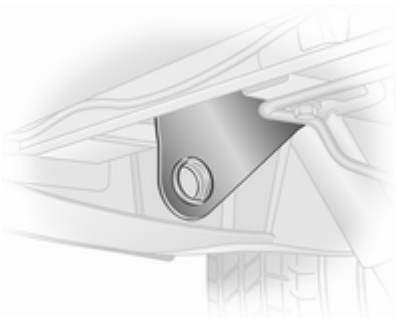

The fixed towing eye is located under the rear bumper.

Attach a tow rope - or better still a tow rod - to the rear towing eye, never to the rear axle and suspension units.

The rear towing eye must only be used for towing and not recovering a vehicle.

Caution

Drive slowly. Do not drive jerkily. Excessive tractive force can damage the vehicle.

Trailer hitch ⇨ 136.

Appearance care

Exterior care

Locks

The locks are lubricated at the factory using a high quality lock cylinder grease. Use de-icing agent only when absolutely necessary, as this has a degreasing effect and impairs lock function. After using de-icing agent, have the locks regreased by a workshop.

Washing

The paintwork of your vehicle is exposed to environmental influences. Wash and wax your vehicle regularly. When using automatic vehicle washes, select a programme that includes waxing. Restrictions for filmed or matt painted body parts or decor tapes, see "Polishing and waxing".

Bird droppings, dead insects, resin, pollen and the like should be cleaned off immediately, as they contain aggressive constituents which can cause paint damage.

If using a vehicle wash, comply with the vehicle wash manufacturer's instructions. The windscreen wipers and rear window wiper must be switched off. Remove antenna and external accessories such as roof racks etc.

If you wash your vehicle by hand, make sure that the insides of the wheel housings are also thoroughly rinsed out.

Clean edges and folds on opened doors and the bonnet as well as the areas they cover.

Caution
Always use a cleaning agent with a pH value of 4 to 9. Do not use cleaning agents on hot surfaces.

Have the door hinges of all doors greased by a workshop.

Do not clean the engine compartment with a steam-jet or high-pressure jet cleaner.

Thoroughly rinse and leather-off the vehicle. Rinse leather frequently. Use separate leathers for painted and glass surfaces: remnants of wax on the windows will impair vision.

Do not use hard objects to remove spots of tar. Use tar removal spray on painted surfaces.

Exterior lights

Headlight and other light covers are made of plastic. Do not use any abrasive or caustic agents, do not use an ice scraper, and do not clean them dry.

Polishing and waxing

Wax the vehicle regularly (at the latest when water no longer beads). Otherwise, the paintwork will dry out.

Polishing is necessary only if the paint has become dull or if solid deposits have become attached to it.

Paintwork polish with silicone forms a protective film, making waxing unnecessary.

Unpainted plastic body parts must not be treated with wax or polishing agents.

Matt filmed body parts or decor tapes must not be polished, to avoid gleaming. Do not use hot wax programmes in automatic car washes if the vehicle is equipped with these parts.

Matt painted decor parts, e.g. mirror housing cover, must not be polished. Otherwise these parts would become agleam or the colour would be dissolved.

Windows and windscreen wiper blades

Use a soft lint-free cloth or chamois leather together with window cleaner and insect remover.

When cleaning the rear window from inside, always wipe in parallel to the heating element to prevent damage.

For mechanical removal of ice, use a sharp-edged ice scraper. Press the scraper firmly against the glass so that no dirt can get under it and scratch the glass.

Clean smearing wiper blades with a soft cloth and window cleaner.

Wheels and tyres

Do not use high-pressure jet cleaners.

Clean rims with a pH-neutral wheel cleaner.

Rims are painted and can be treated with the same agents as the body.

Paintwork damage

Rectify minor paintwork damage with a touch-up pen before rust forms. Have more extensive damage or rust areas repaired by a workshop.

Underbody

Some areas of the vehicle underbody have a PVC undercoating while other critical areas have a durable protective wax coating.

After the underbody is washed, check the underbody and have it waxed if necessary.

Bitumen/rubber materials could damage the PVC coating. Have underbody work carried out by a workshop.

Before and after winter, wash the underbody and have the protective wax coating checked.

Towing equipment

Do not clean the coupling ball bar with a steam-jet or high-pressure jet cleaner.

Interior care

Interior and upholstery

Only clean the vehicle interior, including the instrument panel fascia and panelling, with a dry cloth or interior cleaner.

Clean any leather upholstery with clear water and a soft cloth. In case of heavy soiling, use leather care.

The instrument cluster and the displays should only be cleaned using a soft damp cloth. If necessary use a weak soap solution.

Clean fabric upholstery with a vacuum cleaner and brush. Remove stains with an upholstery cleaner.

Clothing fabrics may not be colourfast. This could cause visible discolourations, especially on light-coloured upholstery. Removable stains and discolourations should be cleaned as soon as possible.

Clean seat belts with lukewarm water or interior cleaner.

Caution

Close Velcro fasteners as open Velcro fasteners on clothing could damage seat upholstery.

The same applies to clothing with sharp-edged objects, like zips or belts or studded jeans.

Plastic and rubber parts

Plastic and rubber parts can be cleaned with the same cleaner as used to clean the body. Use interior cleaner if necessary. Do not use any other agent. Avoid solvents and petrol in particular. Do not use high-pressure jet cleaners.

Service and maintenance

General information 174
Recommended fluids, lubricants and parts 176

General information

Service information

In order to ensure economical and safe vehicle operation and to maintain the value of your vehicle, it is of vital importance that all maintenance work is carried out at the proper intervals as specified.

The detailed, up-to-date service schedule for the vehicle is available at the workshop.

Service display ⇨ 82.

Engine identification ⇨ 179.

European service intervals

Maintenance of your vehicle is required every 40,000 km or after 2 years, whichever occurs first, unless otherwise indicated by the service display.

A shorter service interval can be valid for severe driving behaviour, e.g. for taxis and police vehicles.

The European service intervals are valid for the following countries:

Andorra, Austria, Belgium, Croatia, Czech Republic, Denmark, Estonia, Finland, France, Germany, Greece, Hungary, Iceland, Ireland, Italy, Latvia, Liechtenstein, Lithuania, Luxembourg, Netherlands, Norway, Poland, Portugal, Slovakia, Slovenia, Spain, Sweden, Switzerland, United Kingdom.

International service intervals

Israel:
Maintenance of your vehicle is required every 40,000 km or after 1 year, whichever occurs first, unless otherwise indicated by the service display.

Romania, Bulgaria:
Maintenance of your vehicle is required every 30,000 km or after 1 year, whichever occurs first, unless otherwise indicated by the service display.

Australia:
Maintenance of your vehicle is required every 15,000 km or after 1 year, whichever occurs first, unless otherwise indicated by the service display.

Turkey:
Maintenance of your vehicle is required every 20,000 km or after 1 year, whichever occurs first, unless otherwise indicated by the service display.

Morocco:
Maintenance of your vehicle is required every 15,000 km or after 1 year, whichever occurs first, unless otherwise indicated by the service display.

Russia, Ukraine, Belarus, Kazakhstan:
Maintenance of your vehicle is required every 15,000 km or after 1 year, whichever occurs first, unless otherwise indicated by the service display.

South Africa:
Maintenance of your vehicle is required every 15,000 km or after 1 year, whichever occurs first, unless otherwise indicated by the service display.

Algeria, Tunisia:
Maintenance of your vehicle is required every 10,000 km or after 1 year, whichever occurs first, unless otherwise indicated by the service display.

International:
Maintenance of your vehicle is required every 10,000 km or after 1 year, whichever occurs first, unless otherwise indicated by the service display.

International countries include:

Albania, Bosnia-Herzegovina, Cyprus, Kosovo, Macedonia, Malta, Montenegro, New Zealand, Serbia, Singapore.

International+:
Maintenance of your vehicle is required every 8,000 km or after 1 year, whichever occurs first, unless otherwise indicated by the service display.

International **+** countries include: Moldova.

International++:
Maintenance of your vehicle is required every 5,000 km or after 6 months, whichever occurs first, unless otherwise indicated by the service display.

International **++** countries include: Hong Kong.

Confirmations

Confirmation of service is recorded in the Service and Warranty Booklet. The date and mileage is completed with the stamp and signature of the servicing workshop.

Make sure that the Service and Warranty Booklet is completed correctly as continuous proof of

service is essential if any warranty or goodwill claims are to be met, and is also a benefit when selling the vehicle.

Service display

The service interval is based on several parameters depending on usage.

The service display, located in the Driver Information Centre, indicates when the next service is due. Seek the assistance of a workshop.

Service display ⇨ 82.

Recommended fluids, lubricants and parts

Recommended fluids and lubricants

Only use products that meet the recommended specifications. Damage resulting from the use of products not in line with these specifications will not be covered by the warranty.

⚠ Warning

Operating materials are hazardous and could be poisonous. Handle with care. Pay attention to information given on the containers.

Engine oil

Engine oil is identified by its quality and its viscosity. Quality is more important than viscosity when selecting which engine oil to use. The oil quality ensures e.g. engine cleanliness, wear protection and oil aging control, whereas viscosity grade gives information on the oil's thickness over a temperature range.

Dexos is the newest engine oil quality that provides optimum protection for petrol and diesel engines. If it is unavailable, engine oils of other listed qualities must be used.

Select the appropriate engine oil based on its quality and on the minimum ambient temperature ⇨ 181.

Topping up engine oil

Engine oils of different manufacturers and brands can be mixed as long as they comply with the required engine oil quality and viscosity.

Use of engine oil with only ACEA A1/B1 or only A5/B5 quality is prohibited, since it can cause long-term engine damage under certain operating conditions.

Select the appropriate engine oil based on its quality and on the minimum ambient temperature ⇨ 181.

Additional engine oil additives

The use of additional engine oil additives could cause damage and invalidate the warranty.

Engine oil viscosity grades

The SAE viscosity grade gives information of the thickness of the oil.

Multigrade oil is indicated by two figures, e.g. SAE 5W-30. The first figure, followed by a W, indicates the low temperature viscosity and the second figure the high temperature viscosity.

Select the appropriate viscosity grade depending on the minimum ambient temperature ⇨ 181.

All of the recommended viscosity grades are suitable for high ambient temperatures.

Coolant and antifreeze

Use only silicate-free long life coolant (LLC) antifreeze approved for the vehicle. Consult a workshop.

The system is factory filled with coolant designed for excellent corrosion protection and frost protection down to approx. -28 °C. This concentration should be maintained all year round. The use of additional coolant additives that intend to give additional corrosion protection or seal against minor leaks can cause function problems. Liability for consequences resulting from the use of additional coolant additives will be rejected.

Brake fluid

Over time, brake fluid absorbs moisture which will reduce braking effectiveness. The brake fluid should therefore be replaced at the specified interval.

Technical data

Vehicle identification 178
Vehicle data 181

Vehicle identification

Vehicle Identification Number

The Vehicle Identification Number is visible through the windscreen.

The VIN is also displayed behind a removable plastic cover on the right-hand side door step.

Identification plate

The identification plate is located on the right-hand door pillar.

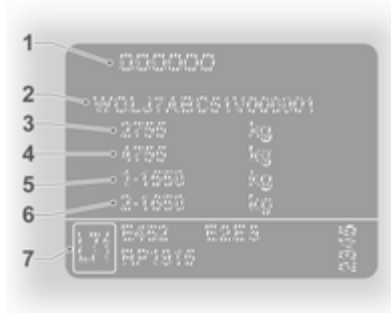

Information on identification plate[1]:

1 = Manufacturer, type approval number
2 = Vehicle Identification Number
3 = Permissible gross vehicle weight rating
4 = Permissible gross combination weight
5 = Maximum permissible front axle load
6 = Maximum permissible rear axle load
7 = Vehicle-specific or country specific data

The combined total of front and rear axle loads must not exceed the permissible gross vehicle weight. For example, if the front axle is bearing its maximum permissible load, the rear axle can only bear a load that is equal to the gross vehicle weight minus the front axle load.

The technical data is determined in accordance with European Community standards. We reserve the right to make modifications. Specifications in the vehicle documents always have priority over those given in this manual.

Engine identification

The technical data tables show the engine identifier code. Engine data ⇨ 182.

To identify the respective engine, refer to the engine power in the EEC Certificate of Conformity provided with your vehicle or other national registration documents.

[1] The VIN plate on your vehicle may differ from the illustration shown.

It is possible, using the Vehicle Identification Number (VIN), to determine the engine type that is installed in your vehicle. For further information consult a workshop.

Vehicle data

Recommended fluids and lubricants

Required engine oil quality

Engine oil quality	
dexos 2	✓

In case dexos quality is unavailable in International countries, you may use the oil qualities listed below:

Engine oil quality	
ACEA A3/B4/C3	✓

Engine oil viscosity grades

Oil viscosity
SAE 0W-30, SAE 0W-40, SAE 5W-30, SAE 5W-40

Engine data

Sales designation	1.6 CDTi 90	1.6 CDTi 115	1.6 CDTi BiTurbo 120	1.6 CDTi BiTurbo 140
Engine identifier code	R9M 408	R9M 408	R9M 450	R9M 450
Number of cylinders	4	4	4	4
Piston displacement [cm^3]	1598	1598	1598	1598
Engine power [kW] (PS)	66 (90)	85 (115)	88 (120)	103 (140)
at rpm	3500	3500	3500	3500
Torque [Nm]	260	300	320	340
at rpm	1500	1750	1500	1750
Fuel type	Diesel	Diesel	Diesel	Diesel

Vehicle weight

Kerb weight, basic model

Optional equipment and accessories increase the kerb weight.

Loading information ⇨ 73.

Model	Engine	Wheelbase	Roof	Payload Class	Gross Vehicle Weight rating	Kerb weight[2)3)]
Van	R9M	L1	H1	1000	2700	1661
				1200	2900	1661
			H2	1200	2900	1760-1771
		L2	H1	1200	2900	1691-1695
			H2	1200	2900	1775

2) Kerb weight and gross vehicle weight increase on models fitted with bad road equipment package - refer to VIN plate.

3) Minimum vehicle weight according to Type Approval, including all fluids, vehicle tools and a 90% fuel load. Excludes the weight of the driver and deletable options, e.g. spare wheel, bulkhead and sliding side load door. Final weight may vary according to the specification of the vehicle, e.g. options, deleted options and accessories.

Model	Engine	Wheelbase	Roof	Payload Class	Gross Vehicle Weight rating	Kerb weight[2)3)]
Combi, Bus	R9M	L1	H1	1000	2700	1901
				1200	2900	1901
		L2	H1	1200	2900	1901

2) Kerb weight and gross vehicle weight increase on models fitted with bad road equipment package - refer to VIN plate.
3) Minimum vehicle weight according to Type Approval, including all fluids, vehicle tools and a 90% fuel load. Excludes the weight of the driver and deletable options, e.g. spare wheel, bulkhead and sliding side load door. Final weight may vary according to the specification of the vehicle, e.g. options, deleted options and accessories.

Model	Engine	Wheelbase	Roof	Payload Class	Gross Vehicle Weight rating	Kerb weight[2)3)]
Platform cab	R9M	L2	H1	1200	2900	1550

2) Kerb weight and gross vehicle weight increase on models fitted with bad road equipment package - refer to VIN plate.
3) Minimum vehicle weight according to Type Approval, including all fluids, vehicle tools and a 90% fuel load. Excludes the weight of the driver and deletable options, e.g. spare wheel, bulkhead and sliding side load door. Final weight may vary according to the specification of the vehicle, e.g. options, deleted options and accessories.

				Additional minimum weights (approx.)[4]		
Model	Engine	Wheelbase	Trim level	Front axle	Rear axle	Total
Double cab	R9M	L1	Base	24	61	85
			Mid	27	69	96
			Upper	32	78	110
		L2	Base	31	54	85
			Mid	35	61	96
			Upper	41	69	110

4) Final weight may vary according to the specification of the vehicle, e.g. options, deleted options and accessories. Refer to identification plate on the right-hand door pillar.

Vehicle dimensions

Type	Van		Combi		Double cab		Platform cab
Wheelbase	L1	L2	L1	L2	L1	L2	L2
Length [mm]	4999	5399	4999	5399	4999	5399	5399
Width without exterior mirrors [mm]	1956	1956	1956	1956	1956	1956	1956
Width with two exterior mirrors [mm]	2283	2283	2283	2283	2283	2283	2185
Height - unladen (without antenna) [mm]							
H1	1971	1971	1971	1971	1971	1971	2700
H2	2465	2465	-	-	-	-	-
Wheelbase [mm]	3098	3498	3098	3498	3098	3498	3498
Track width [mm]							
Front	1615	1615	1615	1615	1615	1615	1615
Rear	1628[5)]	1628[5)]	1628	1628	1628	1628	1628

5) 1630 with H2 Roof height.

Loadspace dimensions

	Van			
Wheelbase	**L1**		**L2**	
Roof height	**H1**	**H2**	**H1**	**H2**
Maximum rear door aperture height [mm]	1320	1820	1320	1820
Rear door aperture width (at floor) [mm]	1391	1391	1391	1391
Maximum load area height [mm]	1387	1898	1387	1898
Maximum load area width [mm]	1662	1662	1662	1662
Width between wheel arches [mm]	1268	1268	1268	1268
Maximum load floor length [mm]	2537	2537	2937	2937
Maximum load floor length - up to front passenger seat [mm][6)]	2950	2950	3350	3350
Maximum load floor length - up to front passenger footwell [mm][6)]	3815	3815	4150	4150
Loading height unladen [mm]	552	527	552	525
Sliding side door aperture width [mm]	1229	1229	1229	1229

	Van			
Wheelbase	**L1**		**L2**	
Roof height	**H1**	**H2**	**H1**	**H2**
Sliding side door aperture width - at 100 mm from floor [mm]	1030	1030	1030	1030
Sliding side door aperture height [mm]	1284	1284	1284	1284

6) with load-through feature.

	Combi	
Wheelbase	**L1**	**L2**
Roof height	**H1**	**H1**
Maximum rear door aperture height [mm]	1295	1295
Rear door aperture width (at floor) [mm]	1391	1391
Maximum load area height [mm]	1369	1369
Maximum load area width [mm]	1662	1662
Width between wheel arches [mm]	1268	1268
Maximum load floor length [mm]	736/1650[7)]	1136/2050[7)]
Loading height unladen [mm]	552	552
Sliding side door aperture width [mm]	1229	1229

	Combi	
Wheelbase	**L1**	**L2**
Roof height	**H1**	**H1**
Sliding side door aperture width - at 100 mm from floor [mm]	1030	1030
Sliding side door aperture height [mm]	1284	1284

7) Depending on number of seats.

	Double cab	
Wheelbase	**L1**	**L2**
Roof height	**H1**	**H1**
Maximum rear door aperture height [mm]	1320	1320
Rear door aperture width (at floor) [mm]	1391	1391
Maximum load area height [mm]	1387	1387
Maximum load area width [mm]	1662	1662
Width between wheel arches [mm]	1268	1268
Maximum load floor length [mm]	2023	2423
Maximum load floor length - behind rear seats [mm]	1340	1740
Loading height unladen [mm]	552	552

	Double cab	
Wheelbase	**L1**	**L2**
Roof height	**H1**	**H1**
Sliding side door aperture width [mm]	1229	1229
Sliding side door aperture width - at 100 mm from floor [mm]	1030	1030
Sliding side door aperture height [mm]	1284	1284

Capacities

Engine oil

Engine	R9M
Engine oil including filter [l]	6.3 - 6.5
between MIN and MAX [l] (approx.)	2.0 - 2.4

Fuel tank

Fuel tank, nominal capacity [l]	80

Tyre pressures

Tyre	Tyre pressure with full load[8]	
	Front [kPa/bar] (psi)	Rear [kPa/bar] (psi)
205/65 R16 C	380/3.8 (55)	420/4.2 (61)
215/65 R16 C	310/3.1 (45)	340/3.4 (49)
195/75 R16 C	380/3.8 (55)	420/4.2 (61)
215/60 R17 C	350/3.5 (51)[9]	390/3.9 (57)[10]

8) The spare wheel should be set to the highest applicable pressure shown in the table.
9) Combi/Bus: 320/3.2 (46) for non-motorway driving below 160 km/h.
10) Combi/Bus: 350/3.5 (51) for non-motorway driving below 160 km/h.

Customer information

Customer information 193
Vehicle data recording and privacy 193

Customer information

Declaration of conformity

This vehicle has systems that transmit and/or receive radio waves subject to Directive 1999/5/EC. These systems are in compliance with the essential requirements and other relevant provisions of Directive 1999/5/EC. Copies of the original Declarations of Conformity can be obtained on our website.

Vehicle data recording and privacy

Event data recorders

Data storage modules in the vehicle

A large number of electronic components of your vehicle contain data storage modules temporarily or permanently storing technical data about the condition of the vehicle, events and errors. In general, this technical information documents the condition of parts, modules, systems or the environment:

- Operating conditions of system components (e.g. filling levels)
- Status messages of the vehicle and its single components (e.g. number of wheel revolutions / rotational speed, deceleration, lateral acceleration)
- Dysfunctions and defects in important system components

- Vehicle reactions in particular driving situations (e.g. inflation of an airbag, activation of the stability regulation system)
- Environmental conditions (e.g. temperature)

These data are exclusively technical and help identifying and correcting errors as well as optimizing vehicle functions.

Motion profiles indicating travelled routes cannot be created with these data.

If services are used (e.g. repair works, service processes, warranty cases, quality assurance), employees of the service network (manufacturer included) are able to read out this technical information from the event and error data storage modules applying special diagnostic devices. If required, you will receive further information at these workshops. After an error has been corrected, the data are deleted from the error storage module or they are constantly overwritten.

When using the vehicle, situations may occur in which these technical data related to other information (accident report, damages on the vehicle, witness statements etc.) may be associated with a specific person - possibly, with the assistance of an expert.

Additional functions contractually agreed upon with the client (e.g. vehicle location in emergency cases) allow the transmission of particular vehicle data from the vehicle.

Radio Frequency Identification (RFID)

RFID technology is used in some vehicles for functions such as tyre pressure monitoring and ignition system security. It is also used in connection with conveniences such as radio remote controls for door locking/unlocking and starting, and in-vehicle transmitters for garage door openers. RFID technology in Opel vehicles does not use or record personal information or link with any other Opel system containing personal information.

Index

A

Accessories and vehicle modifications 138
Adaptive forward lighting 97
Adjustable air vents 110
AGM (Absorptive Glass Mat) battery..... 144
Airbag and belt tensioners 85
Airbag deactivation 58, 85
Airbag label..... 53
Airbag system 53
Air conditioning regular operation 111
Air conditioning system 102
Air intake 111
Air recirculation..... 102, 169
Air vents..... 110
Alert..... 91
Antifreeze..... 142
Antilock brake system 122
Antilock brake system (ABS) 87
Anti-theft alarm system 35
Anti-theft bolts..... 165
Anti-theft locking system 34
Anti-theft security lock..... 25
Appearance care..... 171
Armrest 47
Ashtrays 80
Automatic anti-dazzle 40
Automatic fuel cut-off..... 117
Automatic light control 95
Automatic locking 30
Autostop..... 89, 116
Auxiliary heater..... 106

B

Battery..... 144
Battery, jump starting..... 168
Belts..... 50
Bench seat..... 69
Bonnet 140
Bottle holders..... 68
Brake and clutch fluid..... 176
Brake assist 123
Brake fluid 143
Brakes 122, 143
Brake system 87
Breakdown..... 169
Bulb replacement 147

C

Capacities 191
Car Pass 21
Catalytic converter 120
Central locking system 25
Centre high-mounted brake light 149
Changing tyre and wheel size ... 161
Charging system 86
Child locks 30

Child restraint installation locations 61
Child restraints..... 60
Child restraint systems 60
Cigarette lighter 79
Cleaning the vehicle..... 171
Climate control 17
Climate control systems..... 101
Clock 78
Coat hooks..... 68
Control indicators..... 83
Control of the vehicle 113
Controls..... 75
Controls in steering wheel..... 75
Convex shape 38
Coolant..... 142
Coolant and antifreeze..... 176
Coolant heater..... 106
Cooling (AC)..... 102
Cornering light..... 97
Cruise control 89, 126
Cupholders 68
Curtain airbag system 58

D

Danger, Warnings and Cautions ... 3
Dashboard..... 10
Daytime running lights..... 95, 97
Declaration of conformity..... 193
Demisting and defrosting..... 17
Diesel fuel filter 146
Diesel fuel system bleeding 146
Diesel particle filter 120
Door locks..... 25
Door open 90
Doors..... 31
Double cab..... 69
DPF (diesel particle filter)..... 120
Driver assistance systems..... 126
Driver Information Centre..... 90
Driving characteristics and towing tips 136
Driving economically..... 112
Driving hints..... 112

E

ECO mode..... 112
ecoScoring..... 92
Electric adjustment 38
Electrical system..... 152
Electronic climate control system 103
Electronic key system..... 23
Electronic Stability Program 87, 125, 137
Electronic Stability Program off ... 88
End-of-life vehicle recovery 139
Engine air filter..... 141
Engine air flow indicator..... 141
Engine coolant 142
Engine coolant temperature 88
Engine data 182
Engine exhaust 120
Engine identification..... 179
Engine oil 140, 176, 181
Engine oil additives..... 176
Engine oil level 92
Engine oil pressure 88
Engine oil viscosity grades..... 176
Enhanced Traction function 124, 125
Entry lighting 100
Event data recorders..... 193
Exhaust gases..... 120, 169
Exit lighting 100
Exterior care 171
Exterior light 89
Exterior lighting 14, 95
Exterior mirrors..... 38

F

Fault messages..... 91
First aid kit 72
Fixed air vents 110
Fog light 89
Fog lights..... 98, 148
Fog tail light 151
Folding centre seatback..... 68
Folding front centre passenger seat..... 46
Folding mirrors 38
Front airbag system 57

Front door pockets..... 68
Front fog lights..... 95, 98
Front seats..... 44
Front storage..... 68
Front turn signal lights 148
Fuel consumption - CO_2-
Emissions 135
Fuel cut-off system..... 117
Fuel economy gauge..... 82
Fuel economy mode..... 89
Fuel economy rating..... 91, 92
Fuel for diesel engines 134
Fuel gauge 82
Fuse box..... 153
Fuses 152

G
Gauges..... 80
General information 136
Glovebox 67
Glovebox cooler 110
Glove box lighting..... 99

H
Hand brake - see Parking brake. 123
Hazard warning flashers 97
Headlight flash 96
Headlight range adjustment 96
Headlights..... 95, 96, 147
Headlights when driving abroad . . 96
Head restraint adjustment 8
Head restraints 43
Heated exterior mirrors..... 17
Heated mirrors 39
Heated rear window..... 17, 42
Heating 47
Heating and ventilation system . 101
High beam 89, 96
Hill start assist 123
Horn 16, 76

I
Identification plate 179
Idle speed control..... 116
Ignition switch positions 114
Immobiliser 37
Indicators..... 80
Info-display..... 90
Information displays..... 90
Initial drive information..... 6
Instrument cluster 80
Instrument panel fuse box 153
Instrument panel illumination 152
Instrument panel illumination
control 98
Instrument panel overview 10
Instrument panel storage..... 67
Interior care 172
Interior lighting..... 98
Interior lights 99, 151
Interior mirrors..... 39
Introduction 3
Isofix child restraint systems 66

J
Jack..... 156
Journey record..... 92
Jump starting 168

K
Keys 21
Keys, locks..... 21

L
Lashing eyes 71
Light covers, misted..... 98
Lighting..... 95
Lighting features..... 100
Light switch 95
Load compartment 33
Load compartment cover 70
Load compartment lighting..... 99
Loading information 73
Load-through feature..... 69
Low fuel 89

M
Malfunction indicator light 86
Manual adjustment 38
Manual anti-dazzle 39

Manual transmission 121
Messages..... 91
Mirror adjustment 8
Mirrors..... 38, 39
Misted light covers 98

N
New vehicle running-in 113
Number plate light 150

O
Object detection systems..... 130
Octane rating..... 182
Odometer 81
Oil..... 140
Oil, engine..... 176, 181
Oil pressure..... 88
Outside temperature 78
Overcab storage 70
Overrun cut-off 117

P
Parking 20, 119
Parking assist 130
Parking brake 123
Particulate filter..... 120
Performing work 139
Pollen filter 111
Power button..... 18, 114
Power outlets 79
Power steering fluid..... 142
Power windows 40
Preheating 88, 116
Puncture..... 165

R
Radio Frequency Identification (RFID)..... 194
Radio remote control 21
Rear air conditioning system 105
Rear doors 31
Rear fog light 89
Rear fog lights..... 95, 98
Rear heating system 105
Rear seats..... 47
Rear view camera 132
Rear windows 41
Rear window wiper/washer 77
Recommended fluids and lubricants 176, 181
Refuelling 134
Remote control..... 21
Reversing light 150
Reversing lights 98
Ride control systems..... 124
Roof load..... 73
Roof rack 73

S
Safety belts..... 50
Safety net 71
Seat adjustment 7, 45
Seat belt 8
Seat belt reminder 85
Seat belts 50
Seat folding 46
Seat heating..... 47
Seat position 44
Seats..... 69
Service 111, 174
Service display 82
Service information 174
Service vehicle soon 86
Side airbag system 57
Sidelights..... 95
Side turn signal lights 149
Sliding door 31
Spare wheel 166
Spare wheel security tool..... 156
Speed limiter..... 80, 130
Speedometer 80
Starting and operating..... 113
Starting off 18
Starting the engine..... 18, 116
Steering..... 113
Steering column controls..... 76
Steering wheel adjustment 9, 75

Steering wheel controls 75
Stop engine..... 86
Stop-start system..... 18, 117
Storage..... 67
Storage box..... 69
Storage compartments..... 67
Sun visors 42
Symbols 4

T

Tachograph..... 94
Tachometer 81
Tailgate..... 33
Tail lights 149
Technical data..... 182
Three-point seat belt 51
Tools 156
Top-tether fastening eyes 66
Torx key..... 156
Tow bar..... 136
Towing..... 136, 169
Towing another vehicle 170
Towing a trailer..... 136
Towing eye..... 156, 169
Towing the vehicle 169
Traction Control system 124
Trailer coupling..... 136
Trailer stability assist 137
Trailer towing 136
Transmission 18
Tread depth 160
Trip computer 92
Trip odometer 81
Turbo engine warm-up..... 116
Turn and lane-change signals 97
Turn signal 85
Tyre chains 161
Tyre changing..... 165
Tyre designations 157
Tyre pressure 157
Tyre pressure monitoring system..... 88, 158
Tyre pressures 192
Tyre repair kit 162
Tyres 157
Tyres and wheel size, changing. 161

U

Ultrasonic parking assist..... 130
Underseat storage 69
Upholstery..... 172
Upshift..... 87
Using this manual 3

V

Vehicle battery 144
Vehicle checks..... 139
Vehicle data..... 181
Vehicle data recording and privacy..... 193
Vehicle dimensions 186
Vehicle Identification Number 178
Vehicle jack..... 156
Vehicle messages 91
Vehicle security..... 34
Vehicle shutdown 117
Vehicle specific data 3
Vehicle storage..... 138
Vehicle tools..... 156, 169
Vehicle unlocking 6
Vehicle weight 183
Ventilation..... 101

W

Warning chimes 91
Warning lights..... 80
Warning messages..... 91
Warning triangle 72
Washer and wiper systems 16
Washer fluid 143
Washing the vehicle..... 171
Welcome lighting..... 100
Wheel changing 165
Wheel cover hook..... 156
Wheel covers 161
Wheels and tyres 157
Wheel wrench..... 156
Wide view mirror..... 39
Windows..... 40
Windscreen..... 40

Windscreen wiper/washer 76
Winter tyres 157
Wiper blade replacement 146

www.opel.com

Copyright by ADAM OPEL AG, Rüsselsheim, Germany.

The information contained in this publication is effective as of the date indicated below. Adam Opel AG reserves the right to make changes to the technical specifications, features and design of the vehicles relative to the information in this publication as well as changes to the publication itself.

Edition: October 2014, ADAM OPEL AG, Rüsselsheim.

Printed on chlorine-free bleached paper.

KTA-2769/1-en

10/2014