POWER STEERING SYSTEM

PRECAUTION

1. **HANDLING PRECAUTIONS FOR SRS AIRBAG SYSTEM (SEE PAGE RS-1)**
   NOTICE:
   Some service operations affect the SRS airbag. Be sure to read the precautionary notice for the SRS airbag before servicing.
2. **PRECAUTIONS FOR REMOVAL, INSTALLATION AND REPLACEMENT OF ELECTRONIC MOTOR POWER STEERING COMPONENTS**
   (a) Be sure to align the front wheels straight ahead when removing and installing the steering gear assembly.
   (b) When disconnecting the sliding yoke of the steering column and the pinion shaft of the steering gear assembly, be sure to put matchmarks before starting the operation.
   (c) When any component related to the steering system has been removed and either reinstalled or replaced, perform the steering center point adjustment (zero point calibration) (see page RS-31).
   (d) When disconnecting the connector related to the electronic motor power steering wheel, turn the power switch ON (IG) (the engine and the hybrid system are not stopped), center the steering wheel, turn the power switch OFF, and then disconnect the connector.
   (e) When reconnecting the connector related to the electronic motor power steering system, ensure that the power switch is OFF. Center the steering wheel and then turn the power switch ON (IG) (the engine and the hybrid system are not stopped).
   NOTICE:
   Do not turn the power switch ON (IG) (the engine and the hybrid system are not stopped) when the steering wheel is not centered.
   (f) If the procedures above are not performed out properly, the steering center point (zero point) will deviate, which may lead to a difference in steering effort between right and left. If there is a difference in steering effort between right and left, perform the steering center point adjustment (zero point calibration) (see page RS-31).
   NOTICE:
   FOR INITIALIZATION
   When disconnecting the cable from the negative (-) battery terminal, initialize the following systems after the cable is reconnected.

System Name	See Page
Power Window Control System	IN-32

NOTICE:
FOR HYBRID SYSTEM ACTIVATION

- **When the warning light is illuminated or the battery has been disconnected and reconnected, pressing the power switch may not start the system on the first try. If so, press the power switch again.**
- **With the power switch's power mode changed to ON (IG), disconnect the battery. If the key is not in the key slot during reconnection, DTC B2799 may be output.**

SYSTEM DESCRIPTION

- A rack and pinion type steering gear is used on all models.
- The PRIUS uses a vehicle-speed sensing type EPS (Electric Power Steering) on all models.

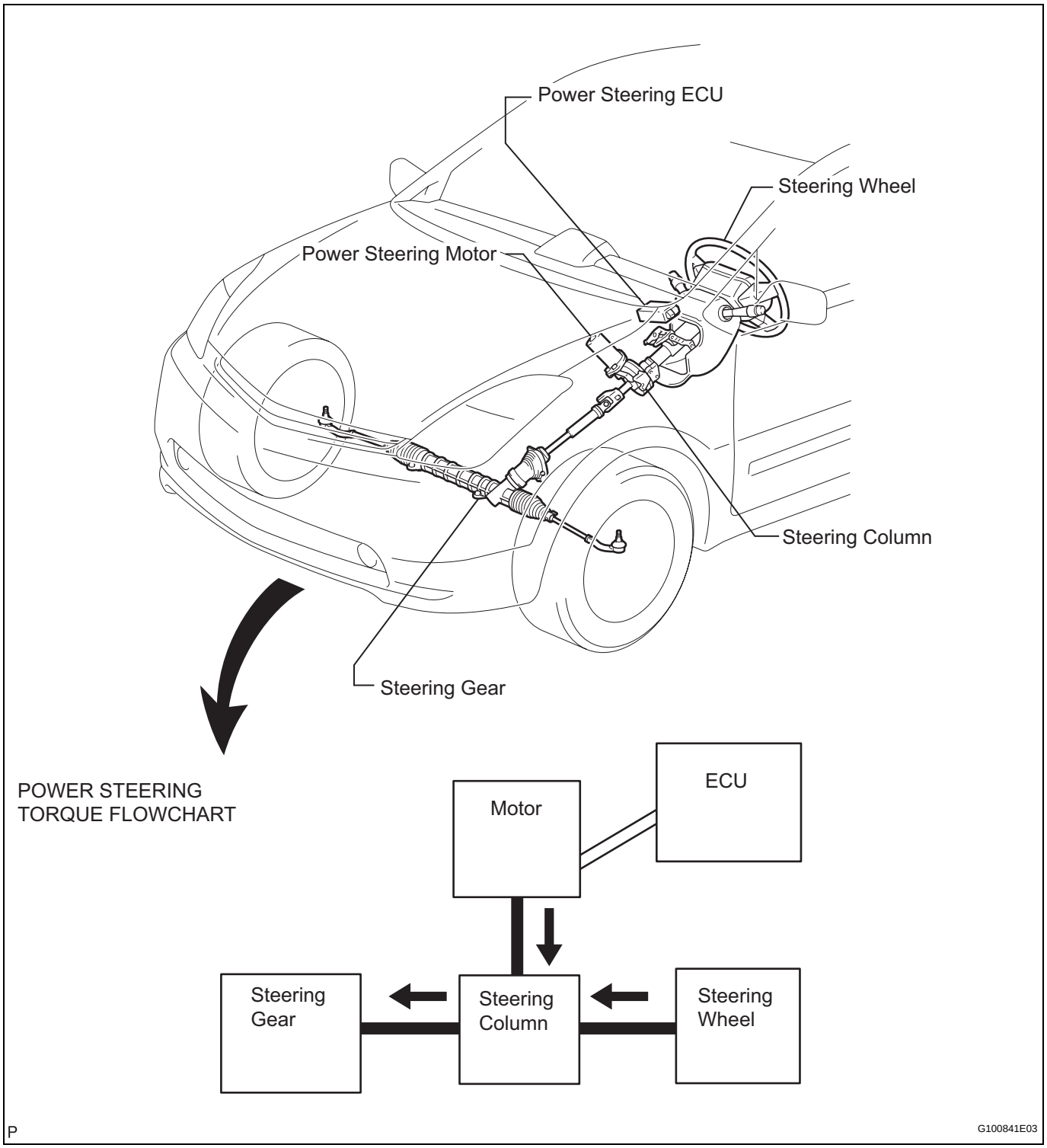

PROBLEM SYMPTOMS TABLE

HINT:
Use the table below to help determine the cause of the problem. The potential causes of the symptoms are listed in order of probability in the "Suspected area" column of the table. Check each symptom by checking the suspected areas in the order they are listed. Replace parts as necessary.

Steering System

Symptom	Suspected area	See page
Steering is heavy.	1. Front tires (improperly inflated, unevenly worn)	TW-3
	2. Front wheel alignment (Incorrect)	SP-2
	3. Front suspension (Lower ball joint)	SP-24
	4. Steering gear	PS-49
	5. Torque sensor (built into steering column)	-
	6. Steering column	SR-7
	7. Power steering motor	SR-7
	8. Battery and power source system	-
	9. Power steering ECU	SR-16
Steering effort differs between right and left or is uneven.	1. Steering center point (zero point) (not recorded completely)	PS-13
	2. Front tires (improperly inflated, unevenly worn)	TW-3
	3. Front wheel alignment (Incorrect)	SP-2
	4. Front suspension (Lower ball joint)	SP-23
	5. Steering gear	PS-49
	6. Torque sensor (built into steering column)	-
	7. Steering column	SR-7
	8. Power steering motor	SR-7
	9. Power steering ECU	SR-16
While driving, steering effort does not change in accordance with vehicle speed or steering wheel does not return properly.	1. Front suspension	SP-2
	2. Speed sensor	-
	3. Skid control ECU	BC-229
	4. Combination meter	-
	5. Engine speed detection circuit	-
	6. Torque sensor (built into steering column)	-
	7. Power steering motor	SR-7
	8. Power steering ECU	SR-16
Knocking (or clunking) sound occurs when turning steering wheel back and forth while power steering is in operation.	1. Front suspension	SP-2
	2. Steering intermediate shaft	-
	3. Steering gear	PS-49
Friction sound occurs when turning steering wheel during low speed driving.	1. Power steering motor	SR-7
	2. Steering column	SR-7
High-pitched sound (squeaking) occurs when turning steering wheel slowly with vehicle stopped.	1. Power steering motor	SR-7
Steering wheel vibrates and noise occurs when turning steering wheel from lock to lock.	1. Power steering motor	SR-7
	2. Steering column	SR-7

ON-VEHICLE INSPECTION

1. CHECK STEERING EFFORT (TORQUE)

NOTICE:

Some service operations affect the SRS airbag. Be sure to read the precautionary notice for the SRS airbag before servicing.

(a) Stop the vehicle on a level, paved road and align the wheels straight ahead.

(b) Disconnect the cable from the negative (-) battery terminal.

(c) Remove the steering pad (see page RS-267).

(d) Connect the cable to the negative (-) battery terminal.

(e) Using a torque wrench, check if the steering wheel set nut is properly tightened.
Torque: 50 N*m (510 kgf*cm, 37 ft.*lbf)

(f) Turn the power switch ON (IG) (the engine and the hybrid system are not operated) so that power steering is ready to operate.

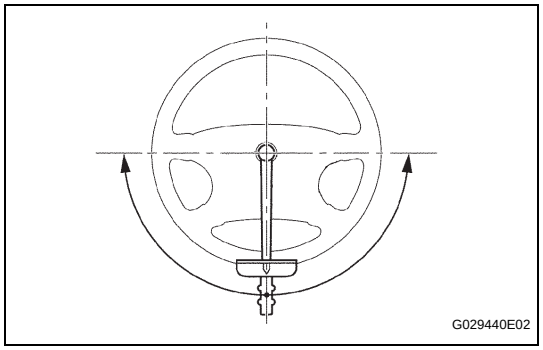

(g) Turn the steering wheel 90 degrees to the right and check steering effort (torque) while turning. Check in the opposite direction using the same procedure.
Steering effort (Reference):
5.5 N*m (56 kgf*cm, 49 in.*lbf)

(h) Align the front wheels straight ahead.

(i) Disconnect the cable from negative (-) battery terminal.

(j) Install the steering pad assembly (see page RS-268).

(k) Connect the cable to the negative (-) battery terminal.

(l) Clear the DTCs (see page RS-38).

(m) Perform initialization (see page IN-32).

(n) Inspect the airbag warning light (see page RS-31).

2. CHECK STEERING WHEEL FREE PLAY

(a) Turn the power switch ON (IG) so that power steering is ready to operate.

(b) Align the wheels straight ahead.

(c) Gently turn the steering wheel right and left with your finger and check the steering wheel free play.
Maximum free play:
30 mm (1.18 in.)
If the free play is out of specification, replace the sliding yoke sub-assembly or steering gear assembly with a new one.

ELECTRONIC POWER STEERING SYSTEM

PRECAUTION

1. FOR INITIALIZATION

NOTICE:

When disconnecting the cable from the negative (-) battery terminal, initialize the following systems after the cable is reconnected.

System Name	See procedure
Power Window Control System	IN-32

2. FOR HYBRID SYSTEM ACTIVATION

NOTICE:

- **When the warning light is illuminated or the battery has been disconnected and reconnected, pressing the power switch may not start the system on the first try. If so, press the power switch again.**
- **With the power switch's power mode changed to ON (IG), disconnect the battery. If the key is not in the key slot during reconnection, DTC B2799 may be output.**

3. HANDLING PRECAUTIONS

(a) When handling the electronic parts:

(1) Avoid any impact to electronic parts such as ECUs and relays. Replace the parts with new ones if dropped or subjected to a severe impact.

(2) Do not expose any electronic parts to high temperature and humidity.

(3) Do not touch the connector terminals in order to prevent deformation or malfunctions due to static electricity.

(4) When the power steering ECU has been replaced with a new one, perform the torque sensor zero point calibration (see page PS-13).

(b) When handling the steering column:

(1) Avoid any impact to the steering column, especially to the motor or torque sensor. Replace the parts with new ones if dropped or subjected to a severe impact.

(2) Do not pull on the wire harness when moving the steering column.

(3) When the steering column has been replaced, perform the torque sensor zero point calibration after initializing the torque sensor zero point calibration signal (see page PS-13).

(c) When disconnecting and reconnecting the connectors:

(1) When disconnecting a connector related to the electric power steering system, turn the power switch ON (IG), center the steering wheel, turn the power switch OFF, and then disconnect the connector.

(2) When reconnecting a connector related to the electric power steering system, ensure that the power switch is OFF. Center the steering wheel and then turn the power switch ON (IG).
NOTICE:
Do not turn the power switch ON (IG) when the steering wheel is not centered.

(3) If the above operations are not carried out properly, the steering center point (zero point) will deviate, which may lead to a difference in right and left steering effort. If there is a difference in right and left steering effort, perform the torque sensor zero point calibration (see page PS-13).

4. PRECAUTIONS FOR CAN COMMUNICATION

(a) CAN communication is used to receive information from the skid control ECU and to transmit warnings to the meter and the multi-display. When there are any problems in the CAN communication lines, DTCs indicating the communication line malfunctions are output.

(b) Perform troubleshooting for the communication line problems when the CAN communication DTCs are output. Be sure to start troubleshooting on the electronic power steering system when data communication is normal.

(c) A temporary fix or repair with bypass wiring, etc. is impossible because the length and path of each CAN communication line is specific.

PARTS LOCATION

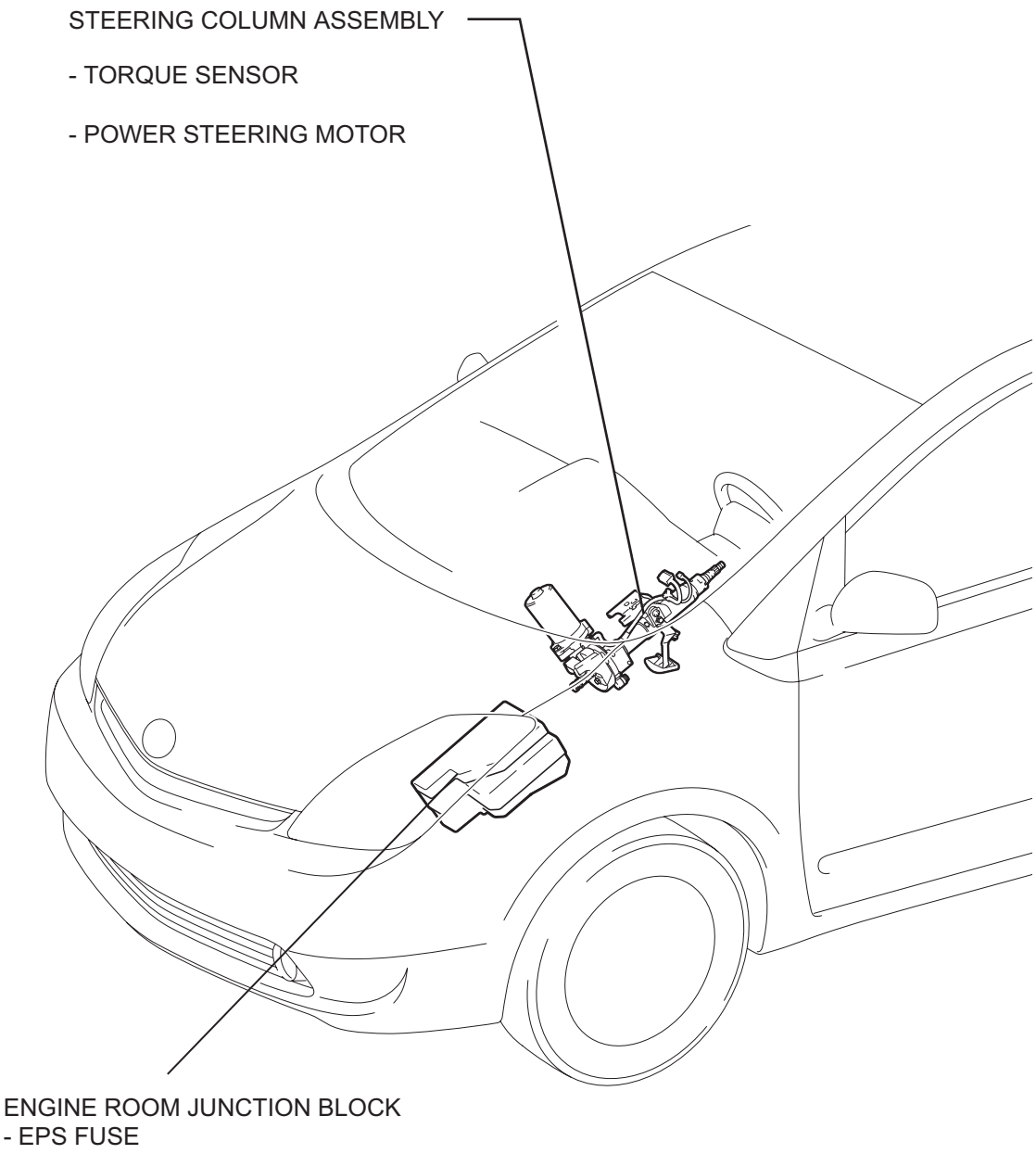

F100806E01

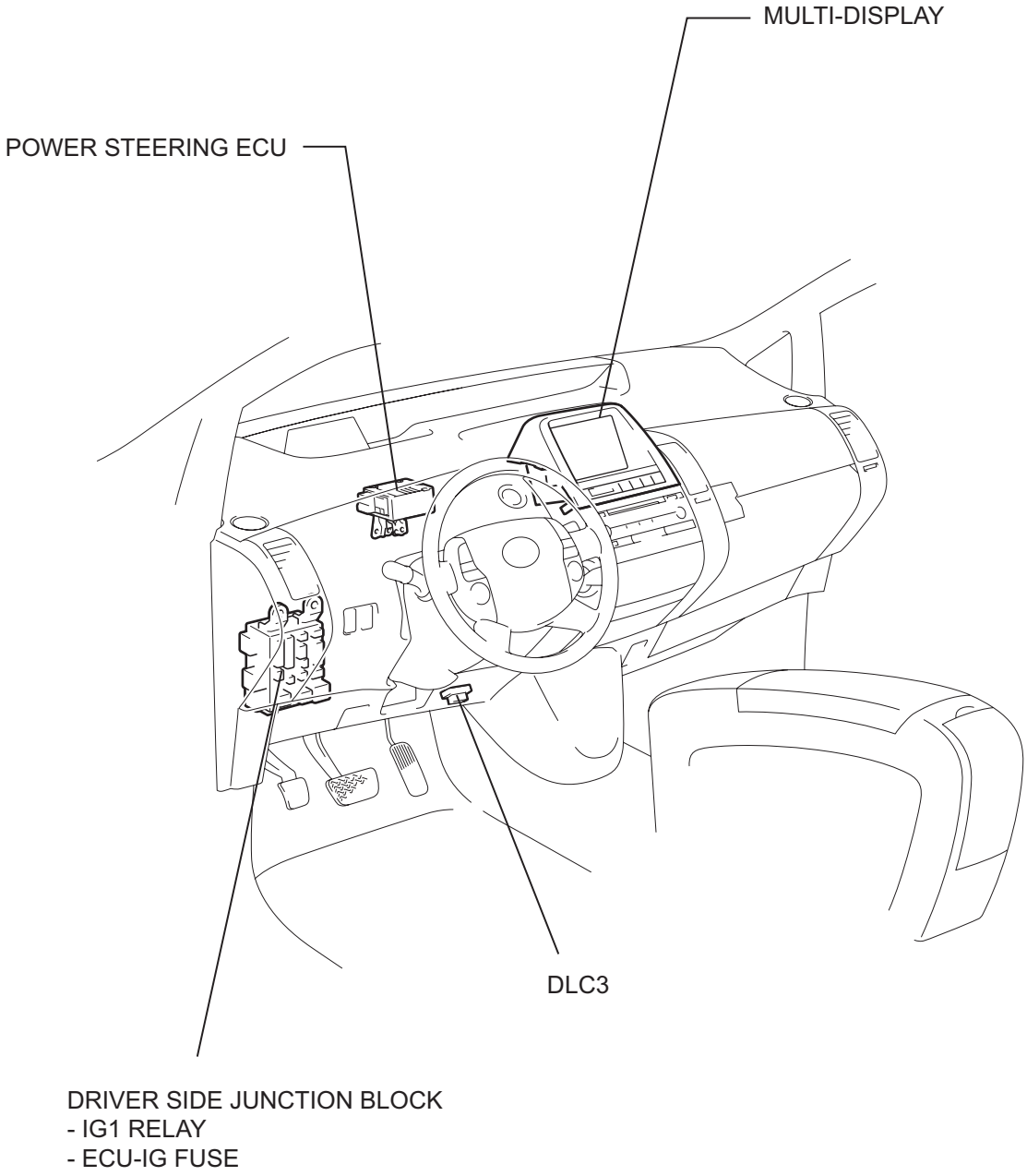

P

F100807E01

SYSTEM DIAGRAM

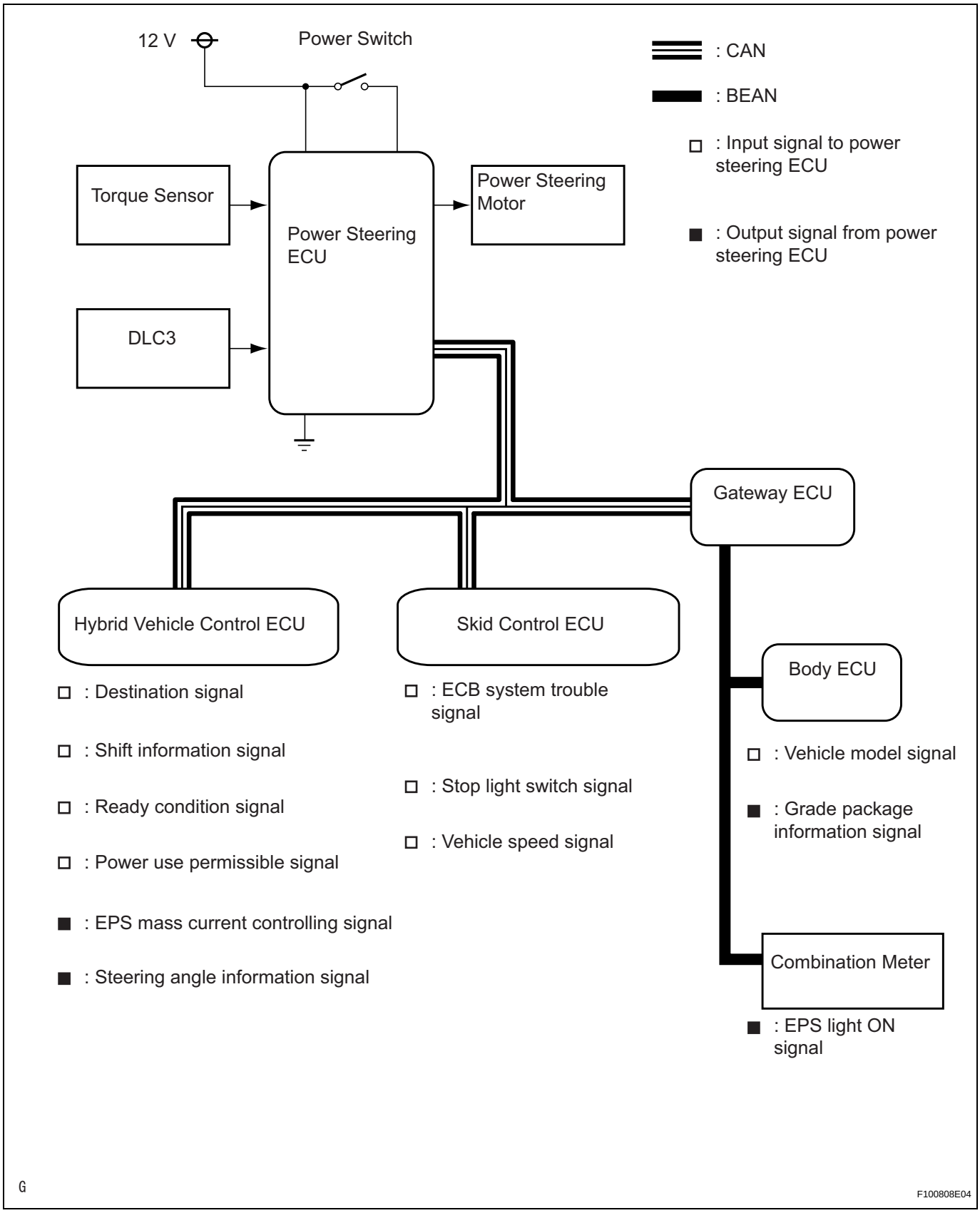

SYSTEM DESCRIPTION

1. DESCRIPTION

(a) The electronic power steering system generates torque through the operation of the motor and the reduction gear installed on the column shaft in order to assist steering effort.
Directions and amount of assisting power are determined by signals from the torque sensor built into the steering column assembly and by the power steering ECU, and controlled in accordance with vehicle speed. As a result, steering effort is controlled to be light during low speed driving and moderately high during high speed driving.

(1) Power steering ECU:
The power steering ECU calculates assisting power based on a steering torque signal from the torque sensor and a vehicle speed signal from the skid control ECU. It generates specified assisting torque by controlling current to the motor.

(2) Torque sensor:
The torque sensor detects steering effort generated when the steering wheel is turned and converts it to an electrical signal.

(3) Power steering motor:
The power steering motor is activated by the current from the power steering ECU and generates torque to assist steering effort.

HOW TO PROCEED WITH TROUBLESHOOTING

HINT:
- Use these procedures to troubleshoot the Electronic Power Steering System (EPS).
- *: Use the intelligent tester.

1 VEHICLE BROUGHT TO WORKSHOP

NEXT

2 INSPECT BATTERY VOLTAGE

Standard voltage:
11 to 14 V

If the voltage is below 11 V, recharge or replace the battery before proceeding.

NEXT

3 CHECK DTC AND FREEZE FRAME DATA*

(a) Record DTCs (see page PS-23) and freeze frame data (see page PS-23).

NEXT

4 PROBLEM SYMPTOM CONFIRMATION

Result

Result	Proceed to
Symptom does not occur	A
Symptom occurs	B

B → **Go to step 6**

A

5 SYMPTOM SIMULATION

NEXT

6 CHECK CAN COMMUNICATION SYSTEM*

(a) Check for DTCs.

Result

Result	Proceed to
CAN system DTC is not output.	A

Result	Proceed to
CAN system DTC is output.	B

HINT:
- When any CAN communication system DTCs are output, perform troubleshooting on the CAN communication system first (see page CA-8).
- When communication to the power steering ECU is not established through the intelligent tester, inspect terminals SIL of the DLC3 and power steering ECU and inspect the IG circuit of the power steering ECU.

B → **PROCEED TO CAN COMMUNICATION SYSTEM**

A

7 CHECK DTC*

(a) Check for a DTCs.
Result

Result	Proceed to
DTC is not output.	A
DTC is output.	B

B → **Go to step 11**

A

8 PROBLEM SYMPTOMS TABLE

NEXT

9 CIRCUIT INSPECTION

NEXT

10 IDENTIFICATION OF PROBLEM

NEXT

11 REPAIR OR REPLACE

NEXT

12	CONFIRMATION TEST

NEXT

END

CALIBRATION

1. INITIALIZATION OF TORQUE SENSOR ZERO POINT CALIBRATION SIGNAL

NOTICE:

Under the following conditions, perform the torque sensor zero point calibration after initializing the torque sensor zero point calibration signal in the ECU:

- **The steering column (containing the torque sensor) has been replaced.**
- **The power steering ECU has been replaced.**
- **The steering wheel has been replaced.**
- **The steering gear assembly has been replaced.**
- **There is a difference in right and left steering effort.**

(a) Center the steering wheel and align the front wheels straight ahead.

(b) Connect the intelligent tester (with CAN VIM) to the DLC3.

(c) Turn the power switch ON (IG) and then initialize the torque sensor zero point calibration signal by following the directions on the tester screen.

NOTICE:

Do not turn the steering wheel while initializing the zero point calibration signal.

(d) Perform steering zero point calibration after turning the power switch OFF.

NOTICE:

Zero point calibration cannot be carried out with the power switch ON (IG) after initialization of the zero point calibration signal is completed.

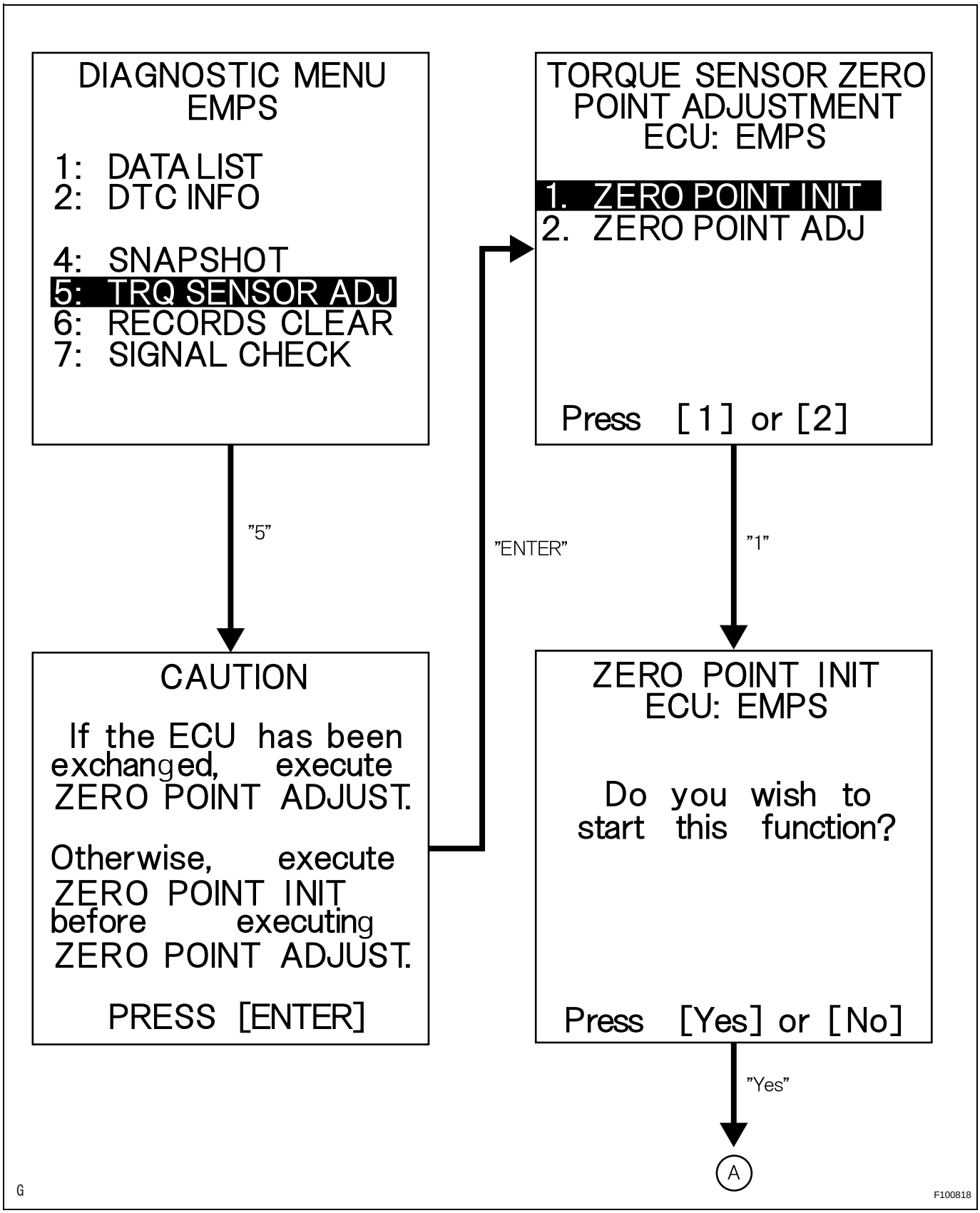
DIAGNOSTIC MENU
EMPS
1: DATA LIST
2: DTC INFO
4: SNAPSHOT
5: TRQ SENSOR ADJ
6: RECORDS CLEAR
7: SIGNAL CHECK
"5"
CAUTION
If the ECU has been exchanged, execute ZERO POINT ADJUST.
Otherwise, execute ZERO POINT INIT before executing ZERO POINT ADJUST.
PRESS [ENTER]
"ENTER"
TORQUE SENSOR ZERO POINT ADJUSTMENT
ECU: EMPS
1. ZERO POINT INIT
2. ZERO POINT ADJ
Press [1] or [2]
"1"
ZERO POINT INIT
ECU: EMPS
Do you wish to start this function?
Press [Yes] or [No]
"Yes"
A
G
F100818

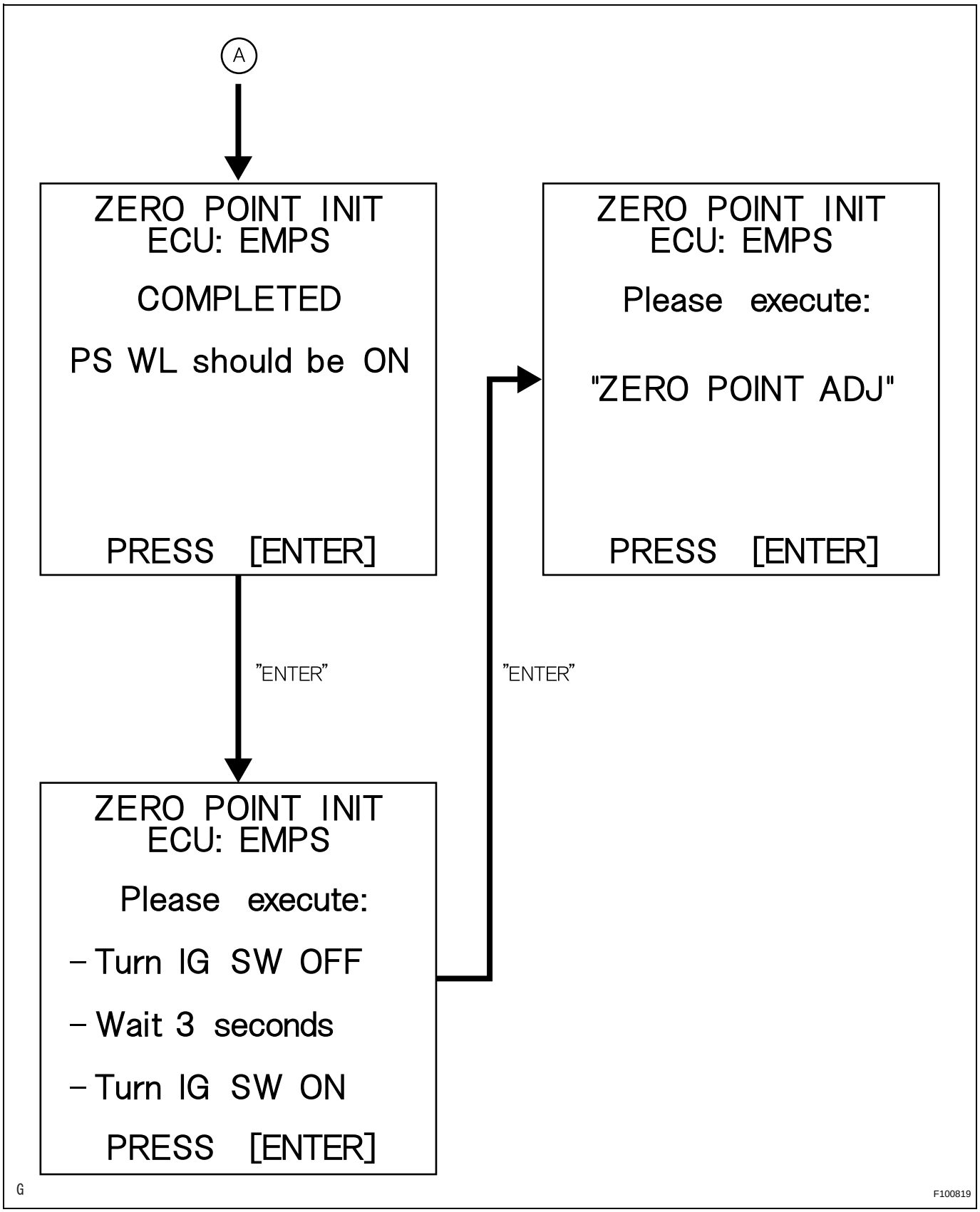

2. TORQUE SENSOR ZERO POINT CALIBRATION

(a) Center the steering wheel and align the front wheels straight ahead.

(b) Connect the intelligent tester (with CAN VIM) to the DLC3.

(c) Turn the power switch ON (IG) and then perform the zero point calibration by following the directions on the tester screen.

NOTICE:

- **The vehicle is stopped.**
- **Do not start the engine. (Do not turn the power switch ON (READY).)**
- **Do not turn the steering wheel.**
- **The vehicle is on level ground.**

(d) Confirm that no DTCs are output after completing the operation.

(1) When DTC C1515 is output, refer to the following procedures (see page PS-32).

(2) When DTC C1516 is output, refer to the following procedures (see page PS-33).

(3) When DTC C1534 is output, refer to the following procedures (see page PS-36).

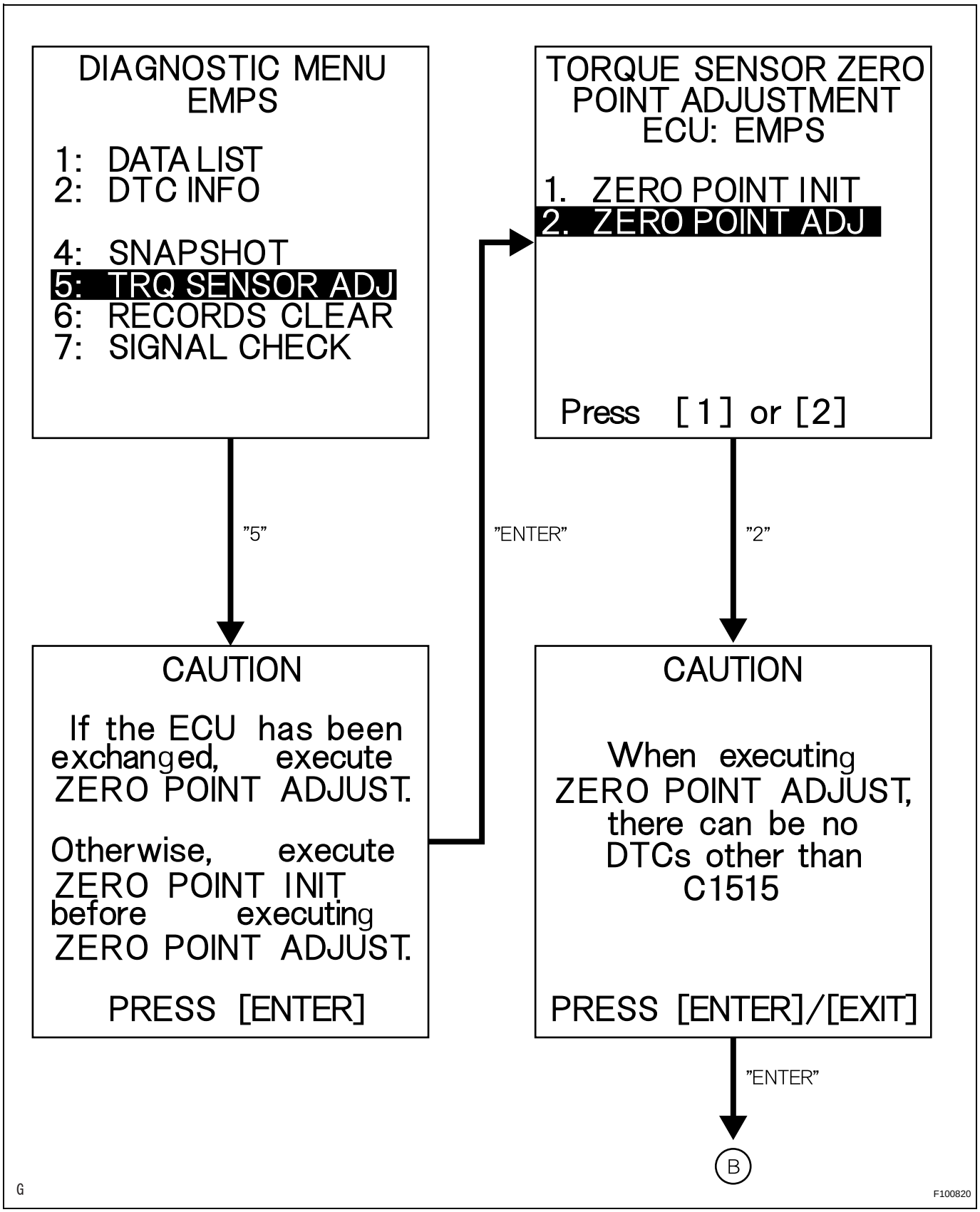
DIAGNOSTIC MENU
EMPS
1: DATA LIST
2: DTC INFO
4: SNAPSHOT
5: TRQ SENSOR ADJ
6: RECORDS CLEAR
7: SIGNAL CHECK
"5"
CAUTION
If the ECU has been exchanged, execute ZERO POINT ADJUST.
Otherwise, execute ZERO POINT INIT before executing ZERO POINT ADJUST.
PRESS [ENTER]
"ENTER"
TORQUE SENSOR ZERO POINT ADJUSTMENT
ECU: EMPS
1. ZERO POINT INIT
2. ZERO POINT ADJ
Press [1] or [2]
"2"
CAUTION
When executing ZERO POINT ADJUST, there can be no DTCs other than C1515
PRESS [ENTER]/[EXIT]
"ENTER"
B
G
F100820

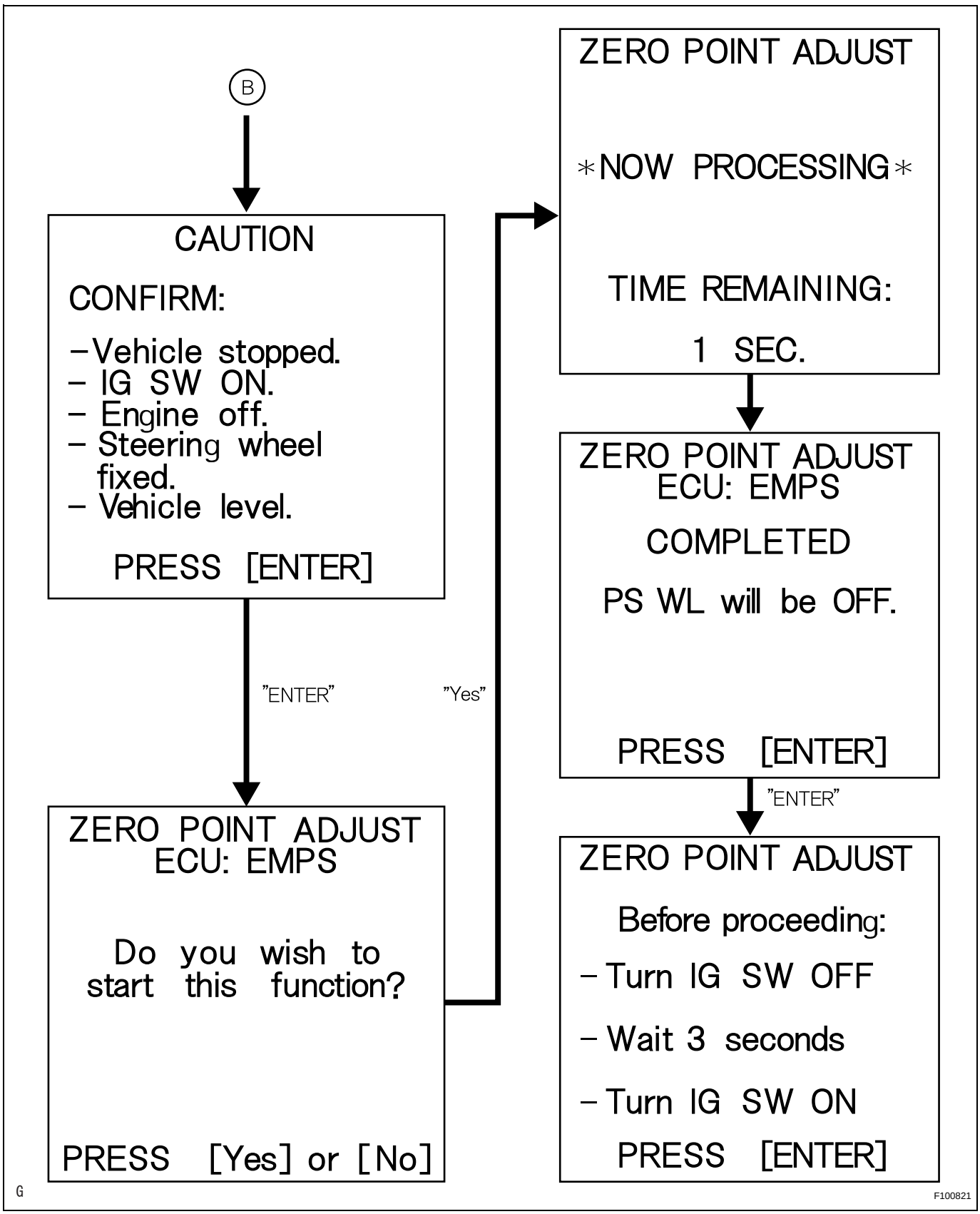
B
CAUTION
CONFIRM:
–Vehicle stopped.
– IG SW ON.
– Engine off.
– Steering wheel fixed.
– Vehicle level.
PRESS [ENTER]
"ENTER"
ZERO POINT ADJUST
ECU: EMPS
Do you wish to start this function?
PRESS [Yes] or [No]
"Yes"
ZERO POINT ADJUST
∗NOW PROCESSING∗
TIME REMAINING:
1 SEC.
ZERO POINT ADJUST
ECU: EMPS
COMPLETED
PS WL will be OFF.
PRESS [ENTER]
"ENTER"
ZERO POINT ADJUST
Before proceeding:
– Turn IG SW OFF
– Wait 3 seconds
– Turn IG SW ON
PRESS [ENTER]
G
F100821

PROBLEM SYMPTOMS TABLE

HINT:
Use the table below to help determine the cause of the problem symptom. The potential causes of the symptoms are listed in order of probability in the "Suspected area" column of the table. Check each symptom by checking the suspected areas in the order they are listed. Replace parts as necessary.

Electronic power steering system

Symptom	Suspected area	See page
Steering is heavy	1. Front tires (Improperly inflated, unevenly worn)	TW-3
	2. Front wheel alignment (Incorrect)	SP-2
	3. Front suspension (Lower ball joint)	SP-24
	4. Steering gear	PS-52
	5. Torque sensor (built into steering column)	PS-32
	6. Steering column	SR-11
	7. Power steering motor	PS-37
	8. Battery and power source system	-
	9. Power source voltage of power steering ECU	PS-44
	10.Power steering ECU	SR-16
Steering effort differs between right and left or is uneven	1. Steering center point (zero point) is not recorded completely	PS-13
	2. Front tires (Improperly inflated, unevenly worn)	TW-3
	3. Front wheel alignment (Incorrect)	SP-2
	4. Front suspension (Lower ball joint)	SP-24
	5. Steering gear	PS-52
	6. Torque sensor (built into steering column)	PS-32
	7. Steering column	SR-11
	8. Power steering motor	PS-37
	9. Power steering ECU	SR-16
While driving, steering effort does not change in accordance with vehicle speed or steering wheel does not return properly	1. Front suspension	-
	2. Speed sensor	BC-218
	3. Skid control ECU	BC-229
	4. Engine speed detection circuit	-
	5. ECM	ES-469
	6. Torque sensor (built into steering column)	PS-32
	7. Power steering motor	PS-37
	8. Power steering ECU	SR-16
	9. CAN communication system	CA-8
Clunking sound occurs when turning steering wheel back and forth while power steering is in operation	1. Front suspension	-
	2. Steering intermediate shaft	-
	3. Steering gear	PS-52
Friction sound occurs when turning steering wheel during low speed driving	1. Power steering motor	PS-37
	2. Steering column	SR-11
High-pitched sound (squeaking) occurs when turning steering wheel slowly with vehicle stopped	Power steering motor	PS-37
Steering wheel vibrates and noise occurs when turning steering wheel with the vehicle stopped	1. Power steering motor	PS-37
	2. Steering column	SR-11
PS warning is always indicated on multi-display	1. Power steering ECU	SR-16
	2. Wire harness	PS-44
	3. CAN communication system	CA-8
	4. Multi-display	NS-172

TERMINALS OF ECU

1. CHECK POWER STEERING ECU

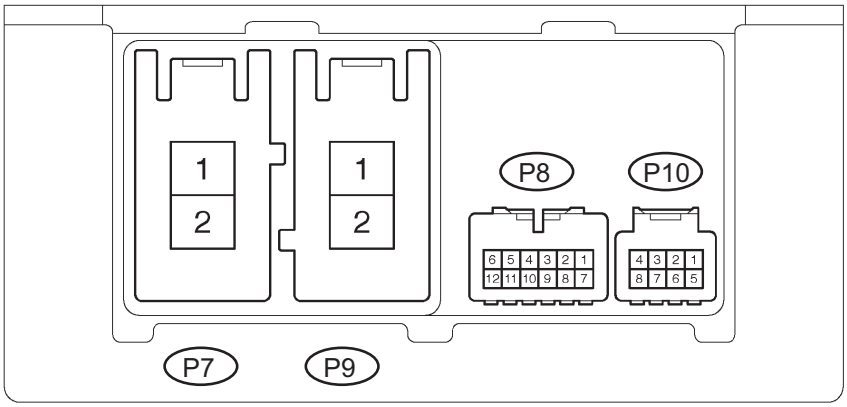

N

F044303E04

(a) Measure the voltage and resistance of the connectors.

Symbols (Terminal No.)	Wiring Color	Terminal Description	Condition	Specified Condition
PIG (P7-1) - PGND (P7-2)	W - W-B	Power source	Always	10 to 16 V
PGND (P7-2) - Body ground	W-B - Body ground	Power ground	Always	Below 1 Ω
M1 (P9-1) - PGND (P7-2)	R - W-B	Power steering motor signal	With power switch ON (IG), turn the steering wheel to left	Below 1 V
			With power switch ON (IG), turn the steering wheel to right	10 to 16 V
M2 (P9-2) - PGND (P7-2)	B - W-B	Power steering motor signal	With power switch ON (IG), turn the steering wheel to left	10 to 16 V
			With power switch ON (IG), turn the steering wheel to right	Below 1 V
CANH (P8-1) - CANL (P8-7)	B - W	CAN communication line	Power switch is OFF	54 to 69 Ω
SIL (P8-2) - PGND (P7-2)	W - W-B	Diagnosis communication signal	Communication is established by connecting the intelligent tester (with CAN VIM) to the DLC3	Pulse generation (see waveform 1)
IG (P8-6) - PGND (P7-2)	B - W-B	IG power source	Power switch is ON (IG)	10 to 16 V
TRQ1 (P10-5) - PGND (P7-2)	B - W-B	Torque sensor signal	With power switch ON (IG), turn the steering wheel to left and right	0.3 to 4.7 V
TRQV (P10-6) - PGND (P7-2)	Y - W-B	Torque sensor voltage source	Power switch ON (IG)	7.5 to 8.5 V
TRQ2 (P10-7) - PGND (P7-2)	R - W-B	Torque sensor signal	With power switch ON (IG), turn the steering wheel to left and right	0.3 to 4.7 V
TRQG (P10-8) - PGND (P7-2)	W - W-B	Torque sensor ground	Always	Below 1 Ω

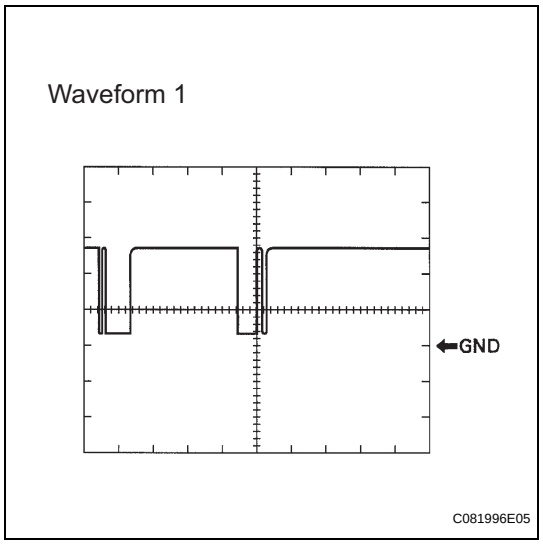

(b) Using an oscilloscope, check waveform 1.
Waveform 1 (Reference)

Terminal	SIL - Body ground
Tool setting	5 V/DIV, 1 ms/DIV
Condition	Communication is established by connecting the intelligent tester (with CAN VIM) to the DLC3

HINT:
If the result is not as specified, the ECU may have a malfunction.

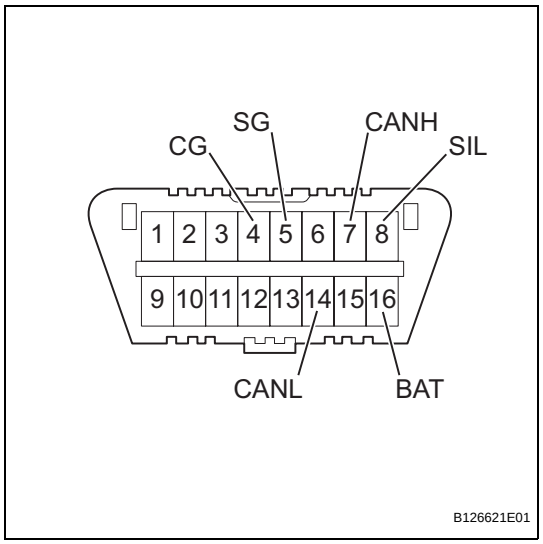

DIAGNOSIS SYSTEM

1. CHECK DLC3

The vehicle's ECU uses the ISO 15765-4 communication protocol. The terminal arrangement of the DLC3 complies with ISO 15031-03 and matches the ISO 15765-4 format.

Symbols (Terminal No.)	Terminal Description	Condition	Specified Condition
SIL (7) - SG (5)	Bus "+" line	During transmission	Pulse generation
CG (4) - Body ground Chassis ground	Chassis ground	Always	Below 1 Ω
SG (5) - Body ground Signal ground	Signal ground	Always	Below 1 Ω
BAT (16) - Body ground	Battery positive	Always	11 to 14 V
CANH (6) - CANL (14)	HIGH-level CAN bus line	Power switch is OFF*	54 to 69 Ω
CANH (6) - Battery positive	HIGH-level CAN bus line	Power switch is OFF*	1 MΩ or higher
CANH (6) - CG (4)	HIGH-level CAN bus line	Power switch is OFF*	1 kΩ or higher
CANL (14) - Battery position	LOW-level CAN bus line	Power switch is OFF*	1 MΩ or higher
CANL (14) - CG (4)	LOW-level CAN bus line	Power switch is OFF*	1 kΩ or higher

NOTICE:
***: Before measuring the resistance, leave the vehicle as is for at least 1 minute and do not operate the ignition switch, other switches or the doors.**
If the result is not as specified, the DLC3 may have a malfunction. Repair or replace the harness and connector.

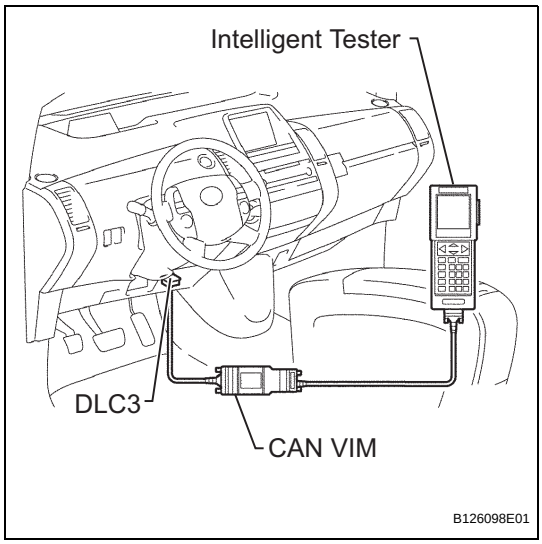

HINT:
Connect the cable of the intelligent tester (with CAN VIM) to the DLC3, turn the power switch ON (IG) and attempt to use the tester. If the display indicates that a communication error has occurred, there is a problem either with the vehicle or with the tester.

- If communication is normal when the tester is connected to another vehicle, inspect the DLC3 on the original vehicle.
- If communication is still not possible when the tester is connected to another vehicle, the problem may be in the tester itself. Consult the Service Department listed in the tester's instruction

2. WARNING LIGHT

(a) When a problem occurs in the electric power steering system, the PS warning is indicated on the multi-display and the master warning light on the combination meter comes on to inform the driver of the problem.

DTC CHECK / CLEAR

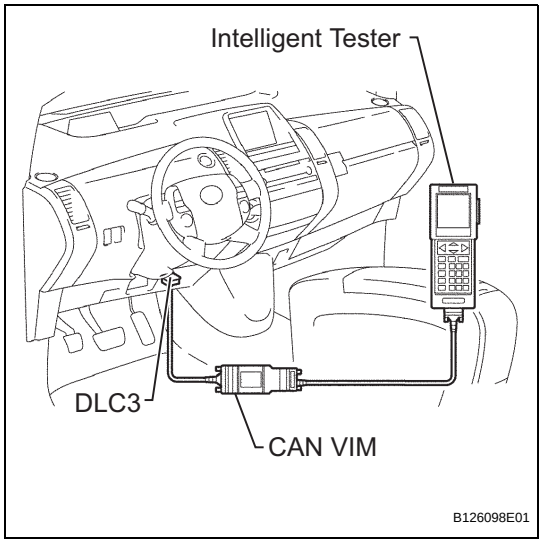

1. CHECK DTC

(a) Connect the intelligent tester (with CAN VIM) to the DLC3.
(b) Turn the power switch ON (IG).
(c) Read the DTCs by following the display on the intelligent tester.
HINT:
Refer to the intelligent tester operator's manual for further details.

2. CLEAR DTC

(a) Connect the intelligent tester (with CAN VIM) to the DLC3.
(b) Turn the power switch ON (IG).
(c) Clear the DTCs by following the display on the intelligent tester.
HINT:
Refer to the intelligent tester operator's manual for further details.

FREEZE FRAME DATA

NOTICE:

- **It is difficult to show the specified values (judgment values) clearly because freeze frame data values significantly change due to differences in measurement conditions, surroundings or vehicle conditions. Because of this reason, there may be a problem even when the values are within specifications.**
- **Turn the power switch ON (IG) and park the vehicle on level ground to check the freeze frame data using the intelligent tester.**

1. Connect the intelligent tester (with CAN VIM) to the DLC3.
2. Turn the power switch ON (IG) and check the freeze frame data by following the prompts on the display of the intelligent tester.

Power steering ECU

Item	Item Description / Range (Display)	Inspection Condition	Reference Value
TRQ1	Torque sensor 1 output value / min.: 0 V, max.: 5 V	Steering wheel is not turned (without load)	2.3 to 2.7 V
		Turning steering wheel to right with vehicle stopped	2.5 to 4.7 V
		Turning steering wheel to left with vehicle stopped	0.3 to 2.5 V
TRQ2	Torque sensor 2 output value / min.: 0 V, max.: 5 V	Steering wheel is not turned (without load)	2.3 to 2.7 V
		Turning steering wheel to right with vehicle stopped	2.5 to 4.7 V
		Turning steering wheel to left with vehicle stopped	0.3 to 2.5 V
TRQ3	Torque value for assist control / min.: 0 V, max.: 5 V	Steering wheel is not turned (without load)	2.3 to 2.7 V
		Turning steering wheel to right with vehicle stopped	2.5 to 4.7 V
		Turning steering wheel to left with vehicle stopped	0.3 to 2.5 V
SPD	Vehicle speed from meter / min.: 0 km/h, max.: 255 km/h	Vehicle is stopped	0 km/h
		Vehicle is driven at a constant speed	No significant fluctuation
MOTOR ACTUAL	Amount of current to motor / min.: -128 A, max.: 127 A	-	-
COMMAND VALUE	Demanded amount of current to motor / min.: -128 A, max.: 127 A	-	-
THERMISTOR TEMP	ECU substrate temperature / min.: -50°C, max.: 205°C	Power switch is ON (IG)	-
PIG SUPPLY	Power source voltage to activate motor / min.: 0 V, max.: 25.5 V	Power steering is in operation	10 to 16 V
IG SUPPLY	ECU power source voltage / min.: 0 V, max.: 25.5 V	-	10 to 16 V
TRQ1 ZERO VAL	Zero point value of torque sensor 1 / min.: 0 V, max.: 5 V	Steering wheel is not turned (without load)	2.3 to 2.7 V
TRQ2 ZERO VAL	Zero point value of torque sensor 2 / min.: 0 V, max.: 5 V	Steering wheel is not turned (without load)	2.3 to 2.7 V
TRQ3 ZERO VAL	Zero point value of torque sensor for assist control / min.: 0 V, max.: 5 V	Steering wheel is not turned (without load)	2.3 to 2.7 V

Item	Item Description / Range (Display)	Inspection Condition	Reference Value
MTR TERMINAL (+)	Motor terminal M1 voltage / min.: 0 V, max.: 25.5 V	Turning steering wheel to right	10 to 16 V
		Turning steering wheel to left	Below 1 V
MTR TERMINAL (-)	Motor terminal M2 voltage / min.: 0 V, max.: 25.5 V	Turning steering wheel to right	Below 1 V
		Turning steering wheel to left	10 to 16 V
# CODES	Number of detected DTCs when freeze frame data is stored / min.: 0 times, max.: 255 times	-	-
READY STATUS	HV system "READY" / OFF/ON	HV system "READY"	ON
		HV system not "READY"	OFF

FAIL-SAFE CHART

When a problem occurs in the electronic motor power steering system, the P/S warning is indicated on the multi-display, the master warning light on the combination meter comes on, and steering power assist is stopped, fixed at a particular point, or decreased simultaneously to protect the system.

Electronic power steering system

DTC No.	Malfunction	Fail-safe
C1511 C1512 C1513 C1514 C1517	Torque sensor malfunction	Power assist stops.
C1524	Motor malfunction	Power assist stops.
C1531 C1532	Power steering ECU malfunction	Power assist stops.
C1533	Temperature sensor malfunction in power steering ECU	Amount of power assist is limited.
C1551	IG power source voltage error	Power assist stops.
C1552	PIG power source voltage error	Power assist stops.
C1554	Power source relay malfunction	Power assist stops.
C1555	Motor relay malfunction	Power assist stops.
U0073	CAN bus malfunction	Amount of power assist is fixed for a speed of 43 mph (70 km/h).
U0121	Skid control ECU communication error	Amount of power assist is fixed for a speed of 43 mph (70 km/h).
-	Extremely high temperature in ECU	Amount of power assist is limited until ECU temperature goes down.
-	Power source voltage drop	Power assist is interrupted, but normal power assist is resumed when voltage returns.

HINT:
Amount of power assist may be decreased to prevent the motor and ECUs from overheating if the steering wheel is continuously turned when the vehicle is either stopped or driven at a low speed, or if the steering wheel is kept at either full lock position for a long time. In that case, the amount of power assist returns to normal if the steering wheel is not turned for approximately 10 minutes with the engine idling.

DATA LIST / ACTIVE TEST

1. READ DATA LIST

HINT:
Using the intelligent tester's DATA LIST allows switch, sensor, actuator and other item values to be read without removing any parts. Reading the DATA LIST early in troubleshooting is one way to save time.

(a) Connect the intelligent tester (with CAN VIM) to the DLC3.
(b) Turn the power switch ON (IG) and press the intelligent tester main switch on.
(c) Read the DATA LIST by following the directions on the tester screen.

Power steering ECU

Item	Item Description / Range (Display)	Inspection Condition	Reference Value
TRQ1	Torque sensor 1 output value / min.: 0 V, max.: 5 V	Steering wheel is not turned (without load)	2.3 to 2.7 V
		Turning steering wheel to right with vehicle stopped	2.5 to 4.7 V
		Turning steering wheel to left with vehicle stopped	0.3 to 2.5 V
TRQ2	Torque sensor 2 output value / min.: 0 V, max.: 5 V	Steering wheel is not turned (without load)	2.3 to 2.7 V
		Turning steering wheel to right with vehicle stopped	2.5 to 4.7 V
		Turning steering wheel to left with vehicle stopped	0.3 to 2.5 V
TRQ3	Torque value for assist control / min.: 0 V, max.: 5 V	Steering wheel is not turned (without load)	2.3 to 2.7 V
		Turning steering wheel to right with vehicle stopped	2.5 to 4.7 V
		Turning steering wheel to left with vehicle stopped	0.3 to 2.5 V
SPD	Vehicle speed from meter / min.: 0 km/h, max.: 255 km/h	Vehicle is stopped	0 km/h
		Vehicle is driven at a constant speed	No significant fluctuation
MOTOR ACTUAL	Amount of current to motor / min.: -128 A, max.: 127 A	-	-
COMMAND VALUE	Demanded amount of current to motor / min.: -128 A, max.: 127 A	-	-
THERMISTOR TEMP	ECU substrate temperature / min.: -50°C, max.: 205°C	Power switch is ON (IG)	-
PIG SUPPLY	Power source voltage to activate motor / min.: 0 V, max.: 25.5 V	Power steering is in operation	10 to 16 V
IG SUPPLY	ECU power source voltage / min.: 0 V, max.: 25.5 V	-	10 to 16 V
TRQ1 ZERO VAL	Zero point value of torque sensor 1 / min.: 0 V, max.: 5 V	Steering wheel is not turned (without load)	2.3 to 2.7 V
TRQ2 ZERO VAL	Zero point value of torque sensor 2 / min.: 0 V, max.: 5 V	Steering wheel is not turned (without load)	2.3 to 2.7 V
TRQ3 ZERO VAL	Zero point value of torque sensor for assist control / min.: 0 V, max.: 5 V	Steering wheel is not turned (without load)	2.3 to 2.7 V
MTR TERMINAL (+)	Motor terminal M1 voltage / min.: 0 V, max.: 25.5 V	Turning steering wheel to right	10 to 16 V
		Turning steering wheel to left	Below 1 V

Item	Item Description / Range (Display)	Inspection Condition	Reference Value
MTR TERMINAL (-)	Motor terminal M2 voltage / min.: 0 V, max.: 25.5 V	Turning steering wheel to right	Below 1 V
		Turning steering wheel to left	10 to 16 V
MTR OVERHEAT	Continuous overheat prevention control record / REC/UNREC	-	-
MTR LOW POWER	PIG power source voltage drop record / REC/UNREC	-	-
CONTROL MODE	Codes indicating DTC detection timing during ECU control are displayed in hexadecimal	-	-
IG ON/OFF TIMES	Number of times power switch is turned on (IG) after DTC detection / min.: 0 times, max.: 255 times	-	-
# CODES	Number of detected DTCs when freeze frame data is stored / min.: 0 max.: 255	-	-
ASSIST MAP	Selected assist map	-	-
ECU I.D.	ECU identification information	-	-
TEST MODE STAT	Selected mode / NORMAL MODE/TEST MODE	-	-
READY STATUS	HV system "READY" / OFF/ON	HV system "READY"	ON
		HV system not "READY"	OFF

DIAGNOSTIC TROUBLE CODE CHART

HINT:
If a trouble code is displayed during the DTC check, inspect the circuit listed for that code. For details of each code, refer to the "See page" for the respective "DTC No." in the DTC chart.

Electronic power steering system

DTC No.	Detection Item	Trouble Area	See page
C1511	Torque Sensor Circuit Malfunction	- Steering column (torque sensor) - Power steering ECU	PS-29
C1512	Torque Sensor Circuit Malfunction	- Steering column (torque sensor) - Power steering ECU	PS-29
C1513	Torque Sensor Circuit Malfunction	- Steering column (torque sensor) - Power steering ECU	PS-29
C1514	Torque Sensor Power Supply Abnormal	- Steering column (torque sensor) - Power steering ECU	PS-29
C1515	Torque Sensor Zero Point Adjustment Undone	- Torque sensor zero point calibration - Steering column	PS-32
C1516	Torque Sensor Zero Point Adjustment Incomplete	- Torque sensor zero point calibration failure - Steering column	PS-33
C1517	Torque Hold Abnormal	- Steering column (torque sensor) - Power steering ECU	PS-29
C1524	Motor Circuit Malfunction	- Steering column (power steering motor) - Power steering ECU	PS-34
C1531	ECU Malfunction	- Power steering ECU	PS-36
C1532	ECU Malfunction	- Power steering ECU	PS-36
C1533	ECU Malfunction	- Power steering ECU	PS-36
C1534	ECU Malfunction	- Power steering ECU	PS-36
C1551	IG Power Supply Voltage Malfunction	- ECU-IG fuse - IG power source circuit - Power steering ECU	PS-37
C1552	PIG Power Supply Voltage Malfunction	- EPS fuse - PIG power source circuit - Power steering ECU	PS-39
C1554	Power Supply Relay Failure	- EPS fuse - PIG power source circuit - Power steering ECU	PS-39
C1555	Motor Relay Welding Failure	- EPS fuse - PIG power source circuit - Power steering ECU	PS-39
C1581	Assist Map Number Un-Writing	- Power steering ECU	PS-41
U0073	Control Module Communication Bus OFF	- CAN communication system	PS-42
U0121	Lost Communication with Anti-lock Brake System (ABS) Control Module	- CAN communication system - Skid control ECU	PS-42

DTC	C1511	Torque Sensor Circuit Malfunction

DTC	C1512	Torque Sensor Circuit Malfunction

DTC	C1513	Torque Sensor Circuit Malfunction

DTC	C1514	Torque Sensor Power Supply Abnormal

DTC	C1517	Torque Hold Abnormal

DESCRIPTION

The torque sensor converts rotation torque input to the steering wheel into an electrical signal and sends it to the ECU. Based on this signal, the ECU detects steering effort.

DTC No.	DTC Detection Condition	Trouble Area
C1511	Torque sensor (TRQ1) signal error or stop	• Torque sensor (built into steering column) • Power steering ECU
C1512	Torque sensor (TRQ2) signal error or stop	• Torque sensor (built into steering column) • Power steering ECU
C1513	Deviation between torque sensors (TRQ1 and TRQ2) is out of specification	• Torque sensor (built into steering column) • Power steering ECU
C1514	Torque sensor power source voltage error	• Torque sensor (built into steering column) • Power steering ECU
C1517	Temporary control due to malfunction related to torque sensor continues for a long time	• Torque sensor (built into steering column) • Power steering ECU

WIRING DIAGRAM

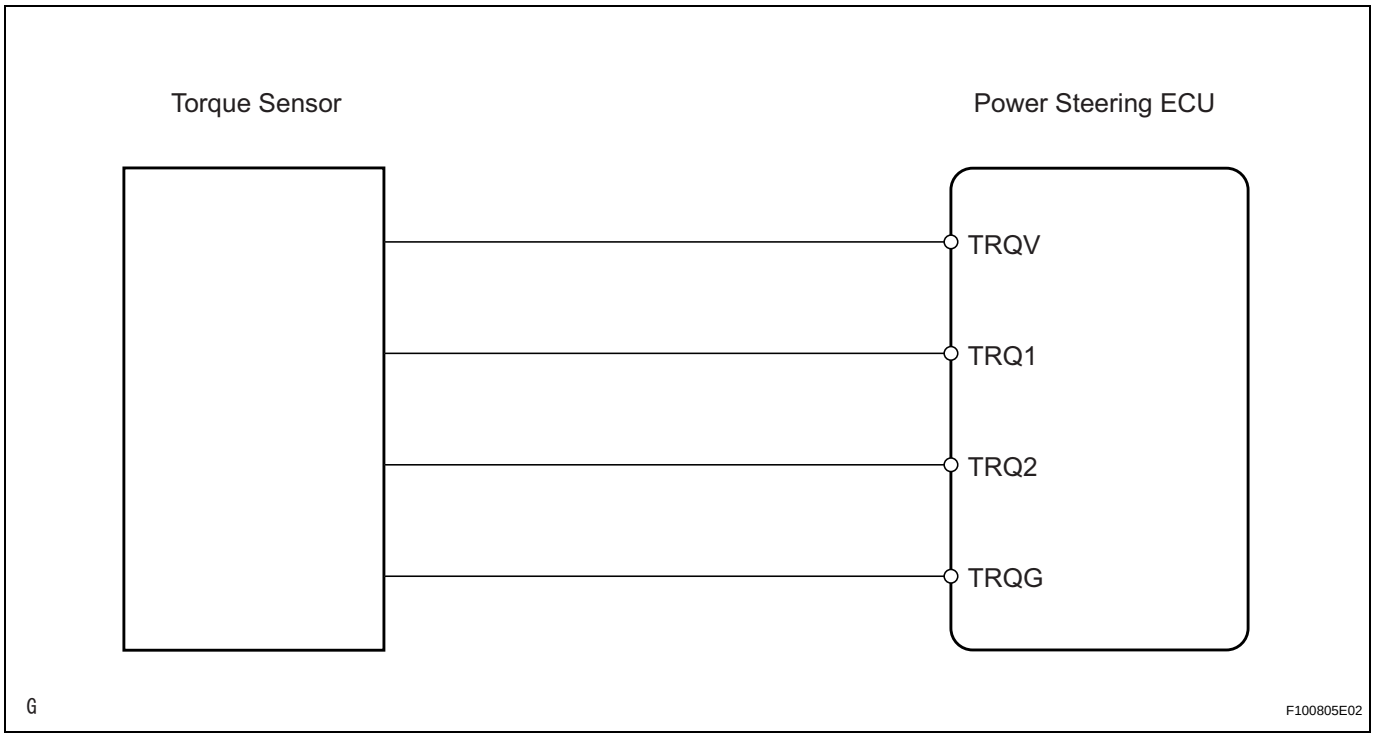

INSPECTION PROCEDURE

1	READ VALUE OF INTELLIGENT TESTER (TORQUE SENSOR)

(a) Connect the intelligent tester (with CAN VIM) to the DLC3.
(b) Turn the power switch ON (IG), and turn the intelligent tester main switch on.
(c) Select the items "TRQ1" and "TRQ2" in the DATA LIST.

Power Steering ECU

Item	Item Description / Range (Display)	Inspection Condition	Reference Value
TRQ1	Torque sensor 1 output value / min.: 0 V, max.: 5 V	Steering wheel is not turned (without load)	2.3 to 2.7 V
		Turning steering wheel to right with vehicle stopped	2.5 to 4.7 V
		Turning steering wheel to left with vehicle stopped	0.3 to 2.5 V
TRQ2	Torque sensor 2 output value / min.: 0 V, max.: 5 V	Steering wheel is not turned (without load)	2.3 to 2.7 V
		Turning steering wheel to right with vehicle stopped	2.5 to 4.7 V
		Turning steering wheel to left with vehicle stopped	0.3 to 2.5 V

(d) Read the values of "TRQ1" and "TRQ2" on the tester display when the steering wheel is centered (without load).
Standard voltage:
2.3 to 2.7 V
(e) Check the difference in the values of "TRQ1" and "TRQ2" when the steering wheel is centered (without load).
Standard voltage:
0.3 V or less
(f) Read the value of the torque sensor on the tester display when the steering wheel is turned.
(1) Turn the steering wheel from its center position to the right full lock position and read the values of "TRQ1" and "TRQ2" on the tester display.
Standard voltage:
2.5 to 4.7 V
(2) Turn the steering wheel from its center position to the left full lock position and read the values of "TRQ1" and "TRQ2" on the tester display.
Standard voltage:
0.3 to 2.5 V
(3) Check the difference in the values of "TRQ1" and "TRQ2".
Standard voltage:
0.3 V or less

OK → **REPLACE POWER STEERING ECU**

NG

PS

2 CHECK STEERING COLUMN ASSEMBLY (TORQUE SENSOR)

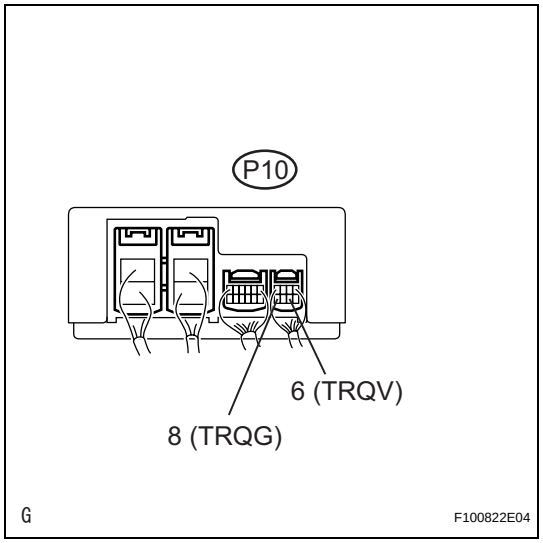

(a) Measure the voltage of the ECU.
Standard voltage

Tester Connection	Condition	Specified Condition
P10-6 (TRQV) - P10-8 (TRQG)	Power switch is ON (IG)	7.5 to 8.5 V

OK → **REPLACE POWER STEERING ECU**

NG

3 CHECK POWER STEERING ECU

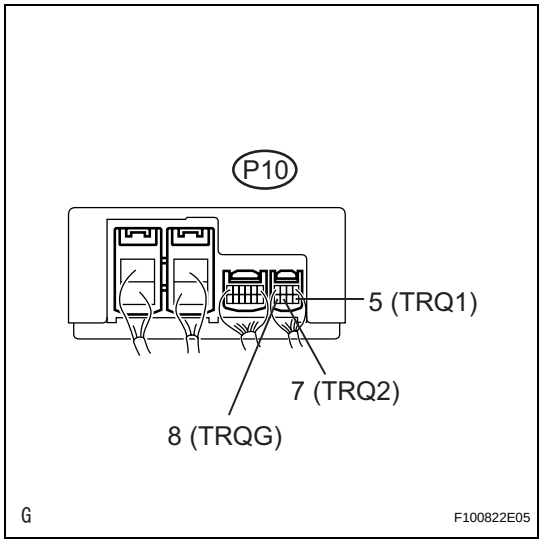

(a) Measure the voltage of the ECU.
Standard voltage

Tester Connection	Condition	Specified Condition
P10-5 (TRQ1) - P10-8 (TRQG)	Power switch is ON (IG) Steering wheel center position	2.3 to 2.7
P10-7 (TRQ2) - P10-8 (TRQG)	Power switch is ON (IG) Steering wheel center position	2.3 to 2.7
P10-5 (TRQ1) - P10-8 (TRQG)	Power switch is ON (IG) Steering wheel turned to right	2.5 to 4.7
P10-7 (TRQ2) - P10-8 (TRQG)	Power switch is ON (IG) Steering wheel turned to right	2.5 to 4.7
P10-5 (TRQ1) - P10-8 (TRQG)	Power switch is ON (IG) Steering wheel turned to left	0.3 to 2.5 V
P10-7 (TRQ2) - P10-8 (TRQG)	Power switch is ON (IG) Steering wheel turned to left	0.3 to 2.5 V

OK → **REPLACE STEERING COLUMN ASSEMBLY**

NG

REPLACE POWER STEERING ECU

DTC	C1515	Torque Sensor Zero Point Adjustment Undone

DESCRIPTION

This DTC does not indicate a malfunction. The power steering ECU outputs this DTC when it determines that the torque sensor zero point calibration has not been performed.

DTC No.	DTC Detection Condition	Trouble Area
C1515	This DTC is detected when torque sensor zero point calibration has not been performed.	• Torque sensor zero point calibration (There is no malfunction if this DTC is not output again after performing zero point calibration.) • Steering column

INSPECTION PROCEDURE

1 CLEAR DTC

(a) Clear the DTC (see page PS-23).

NEXT

2 PERFORM ZERO POINT CALIBRATION OF TORQUE SENSOR

(a) Perform the torque sensor zero point calibration (see page PS-13).

NEXT

3 RECONFIRM DTC

(a) Check for DTCs (see page PS-23).

Result

Result	Proceed to
DTCs are still output even after performing torque sensor zero point calibration 3 times.	A
DTCs are still output even after performing torque sensor zero point calibration once or twice.	B
Normal system code is output.	C

HINT:
Replace the steering column assembly if DTCs are still output even after performing the torque sensor zero point calibration 3 times.

B → **Go to step 2**

C → **END**

PS

A

REPLACE STEERING COLUMN ASSEMBLY

DTC	C1516	Torque Sensor Zero Point Adjustment Incomplete

DESCRIPTION

This DTC does not indicate a malfunction. The power steering ECU outputs this DTC when it determines that the torque sensor zero point calibration has not been completed normally.

DTC No.	DTC Detection Condition	Procedure
C1516	Torque sensor zero point calibration has not been completed normally due to touching the steering wheel during calibration.	There is no malfunction if this DTC is not output again after clearing the DTCs, initializing the zero point calibration signal, and performing zero point calibration.

INSPECTION PROCEDURE

1 CLEAR DTC

(a) Clear the DTC (see page PS-23).

NEXT

2 PERFORM ZERO POINT CALIBRATION OF TORQUE SENSOR

(a) Perform the torque sensor zero point calibration (see page PS-13).

NEXT

3 RECONFIRM DTC

(a) Check for DTCs.

Result

Result	Proceed to
DTCs are still output even after performing torque sensor zero point calibration 3 times.	A
DTCs are still output even after performing torque sensor zero point calibration once or twice.	B
Normal system code is output.	C

HINT:
Replace the steering column assembly if DTCs are still output even after performing the torque sensor zero point calibration 3 times.

B → **Go to step 2**

C → **END**

A

REPLACE STEERING COLUMN ASSEMBLY

DTC	C1524	Motor Circuit Malfunction

DESCRIPTION

The power steering ECU supplies current to the power steering motor through this circuit.

DTC No.	DTC Detection Condition	Trouble Area
C1524	Voltage error between motor terminals	• Steering column (power steering motor) • Power steering ECU

WIRING DIAGRAM

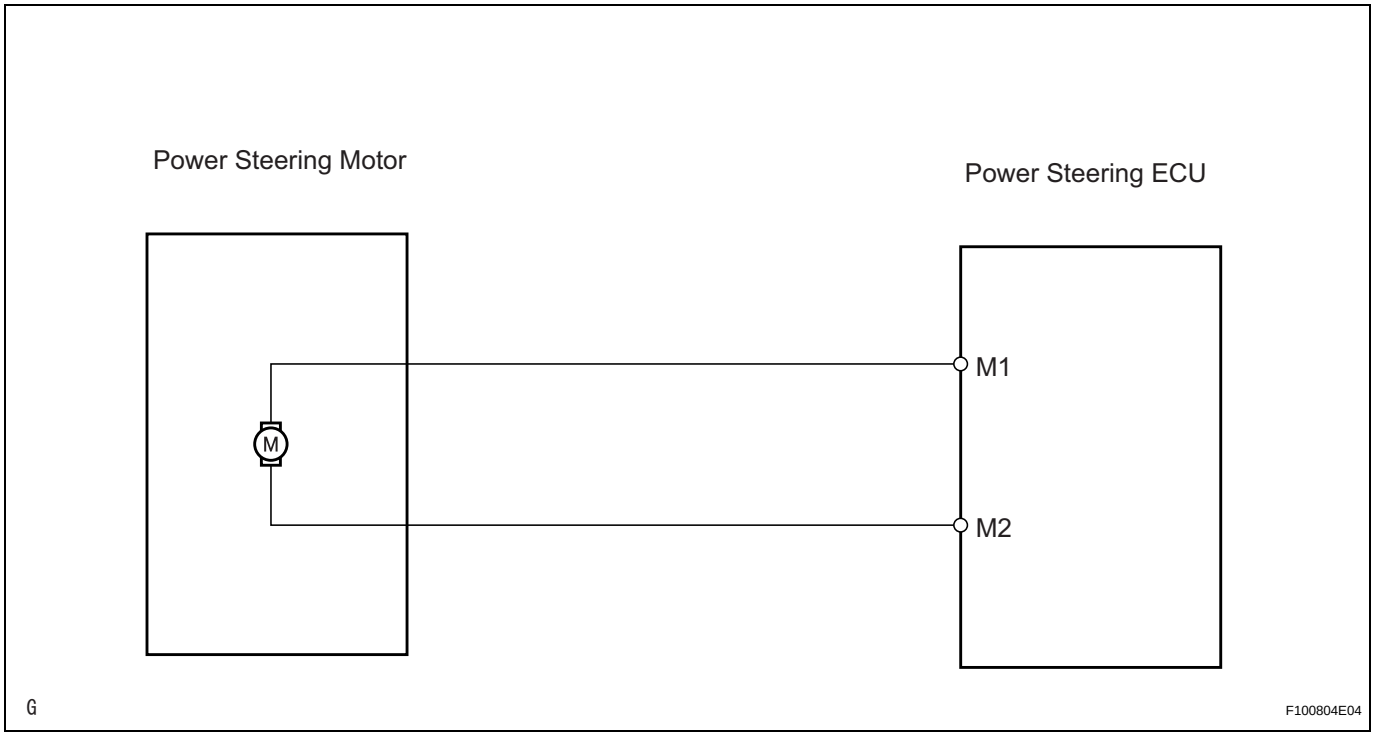

INSPECTION PROCEDURE

1	CHECK POWER STEERING ECU

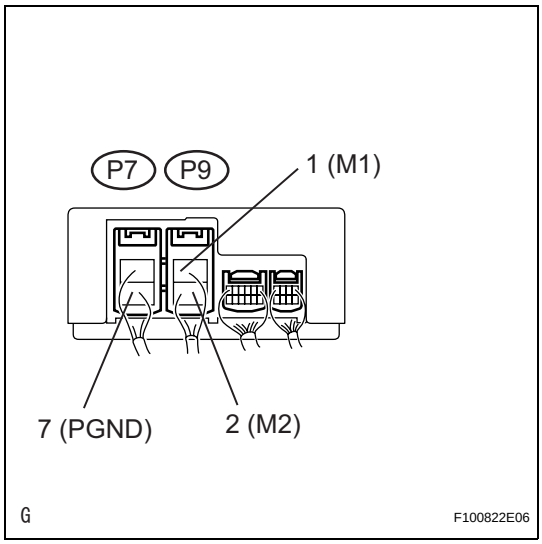

(a) Turn the power switch ON (IG).
(b) Measure the voltage of the ECU.
Standard voltage

Tester Connection	Condition	Specified Condition
P9-1 (M1) - P7-2 (PGND)	The steering wheel is turned to the left.	Below 1 V
P9-1 (M1) - P7-2 (PGND)	The steering wheel is turned to the right.	10 to 16 V
P9-2 (M2) - P7-2 (PGND)	The steering wheel is turned to the left.	10 to 16 V
P9-2 (M2) - P7-2 (PGND)	The steering wheel is turned to the right.	Below 1 V

NG → REPLACE POWER STEERING ECU

OK

2 CHECK POWER STEERING MOTOR

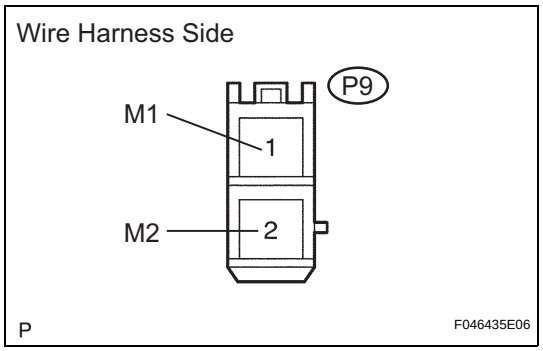

(a) Turn the power switch OFF.
(b) Disconnect the P9 power steering ECU connector.
(c) Measure the resistance of the wire harness side connector.

Standard resistance

Tester Connection	Specified Condition
P9-1 (M1) - P9-2 (M2)	0.04 to 0.1 Ω
P9-1 (M1) - Body ground	10 kΩ or higher
P9-2 (M2) - Body ground	10 kΩ or higher

NG → **REPLACE STEERING COLUMN ASSEMBLY**

OK

REPLACE POWER STEERING ECU

DTC	C1531	ECU Malfunction

DTC	C1532	ECU Malfunction

DTC	C1533	ECU Malfunction

DTC	C1534	ECU Malfunction

DESCRIPTION

Fail-safe function operates to stop power assist while DTCs indicating ECU malfunctions are output. However, power assist continues when DTC C1534 is output because it indicates an EEPROM error in the ECU.

DTC No.	DTC Detection Condition	Trouble Area
C1531	ECU internal malfunction (CPU malfunction) is detected.	Power steering ECU
C1532	ECU internal malfunction (Peripheral circuit malfunction) is detected.	Power steering ECU
C1533	ECU internal malfunction (Substrate temp. sensor malfunction) is detected.	Power steering ECU
C1534	ECU internal malfunction (EEPROM error) is detected.	Power steering ECU

INSPECTION PROCEDURE

1 RECONFIRM DTC

(a) Check for DTCs.
OK:
DTCs other than C1531, C1532, C1533 and C1534 are not output.

NG → **REPAIR CIRCUIT INDICATED BY OUTPUT CODE**

OK

REPLACE POWER STEERING ECU

DTC	C1551	IG Power Supply Voltage Malfunction

DESCRIPTION

The power steering ECU distinguishes on / off status of the power switch through this circuit.

DTC No.	DTC Detection Condition	Trouble Area
C1551	There is an open or short in the IG power source circuit with the power switch ON (IG).	• ECU-IG fuse • IG power source circuit • Power steering ECU

WIRING DIAGRAM

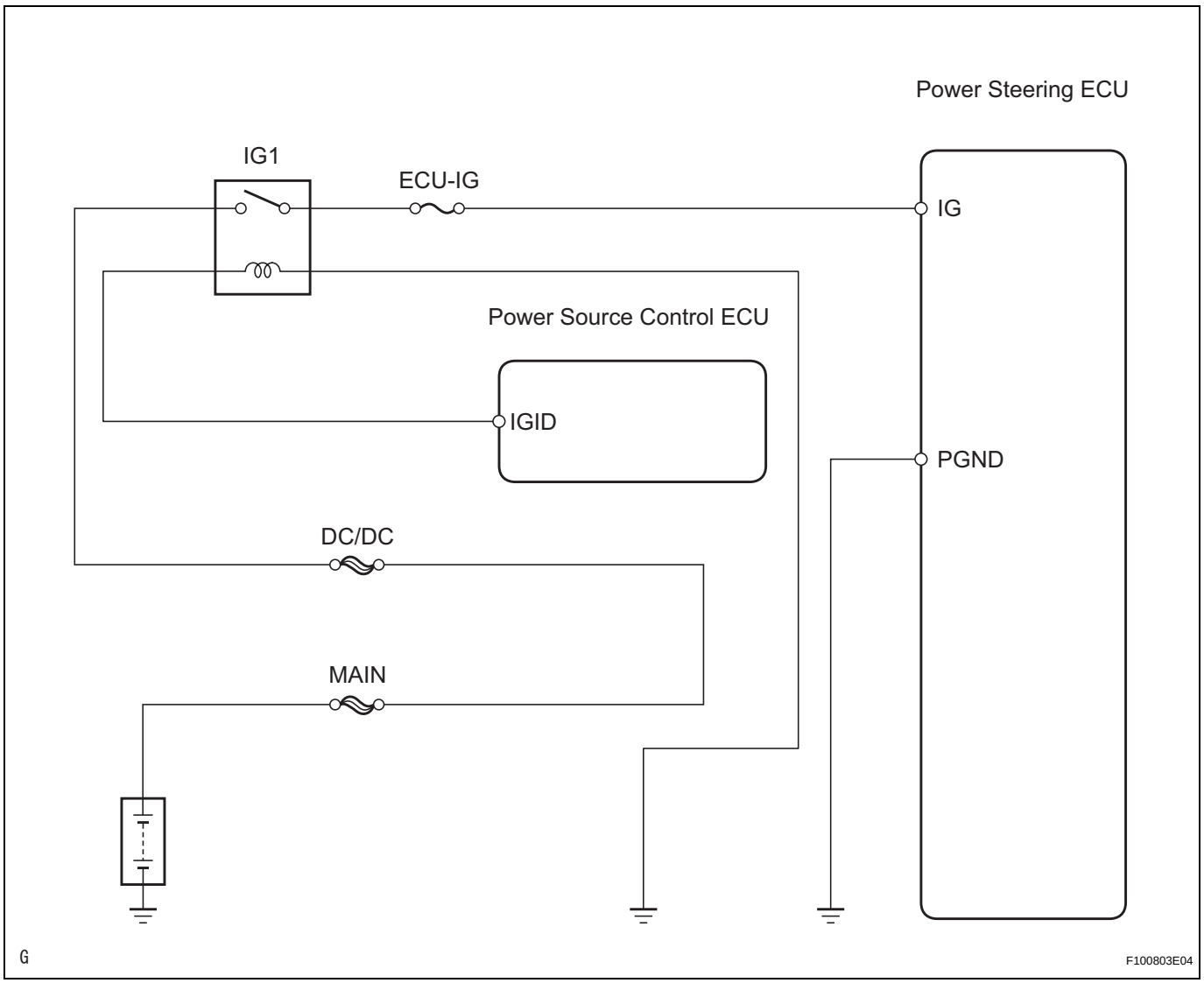

INSPECTION PROCEDURE

1	INSPECT FUSE (ECU-IG)

(a) Remove the ECU-IG fuse from the driver side junction block.
(b) Measure the resistance of the fuse.

PS

Standard resistance:
Below 1 Ω

NG → **INSPECT FOR SHORT IN ALL COMPONENTS CONNECTED TO FUSE AND REPAIR OR REPLACE THEM IF NEEDED, AND REPLACE FUSE**

OK

2 CHECK WIRE HARNESS (POWER STEERING ECU - BODY GROUND)

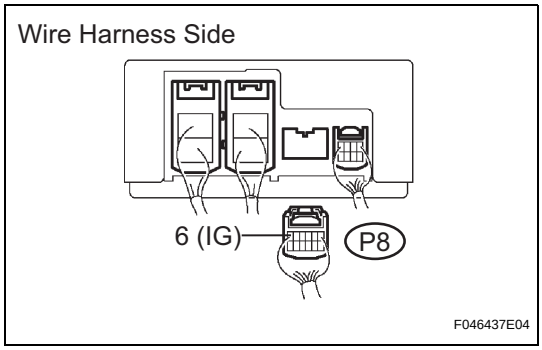

(a) Disconnect the P8 power steering ECU connector.
(b) Turn the power switch ON (IG).
(c) Measure the voltage of the wire harness side connector.
Standard voltage

Tester Connection	Condition	Specified Condition
P8-6 (IG) - Body ground	Power switch is ON (IG)	10 to 16 V

NG → **REPAIR OR REPLACE HARNESS AND CONNECTOR**

OK

3 CHECK WIRE HARNESS (POWER STEERING ECU - BODY GROUND)

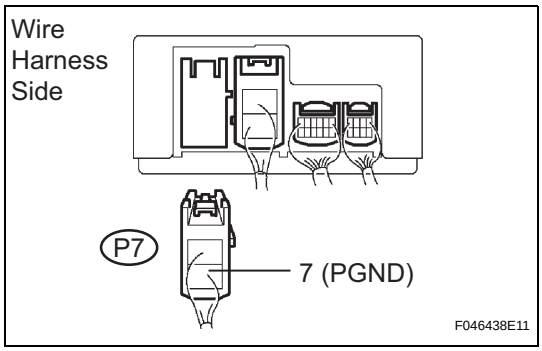

(a) Turn the power switch OFF.
(b) Disconnect the P7 power steering ECU connector.
(c) Measure the resistance of the wire harness side connector.
Standard resistance

Tester Connection	Specified Condition
P7-2 (PGND) - Body ground	Below 1 Ω

NG → **REPAIR OR REPLACE HARNESS AND CONNECTOR**

OK

REPLACE POWER STEERING ECU

DTC	C1552	PIG Power Supply Voltage Malfunction

DTC	C1554	Power Supply Relay Failure

DTC	C1555	Motor Relay Welding Failure

DESCRIPTION

When a problem occurs in the system, the power source relay (built into the power steering ECU) circuit and the motor relay (built into the power steering ECU) circuit are shut off to stop power assist. It is necessary to replace the ECU when there is a problem in the relay because each relay is built into the ECU.

DTC No.	DTC Detection Condition	Trouble Area
C1552	PIG power source voltage error	• EPS H-fuse • PIG power source circuit • Power steering ECU
C1554	Power source relay malfunction	• EPS H-fuse • PIG power source circuit • Power steering ECU
C1555	Motor relay malfunction	• EPS Fuse • PIG power source circuit • Power steering ECU

WIRING DIAGRAM

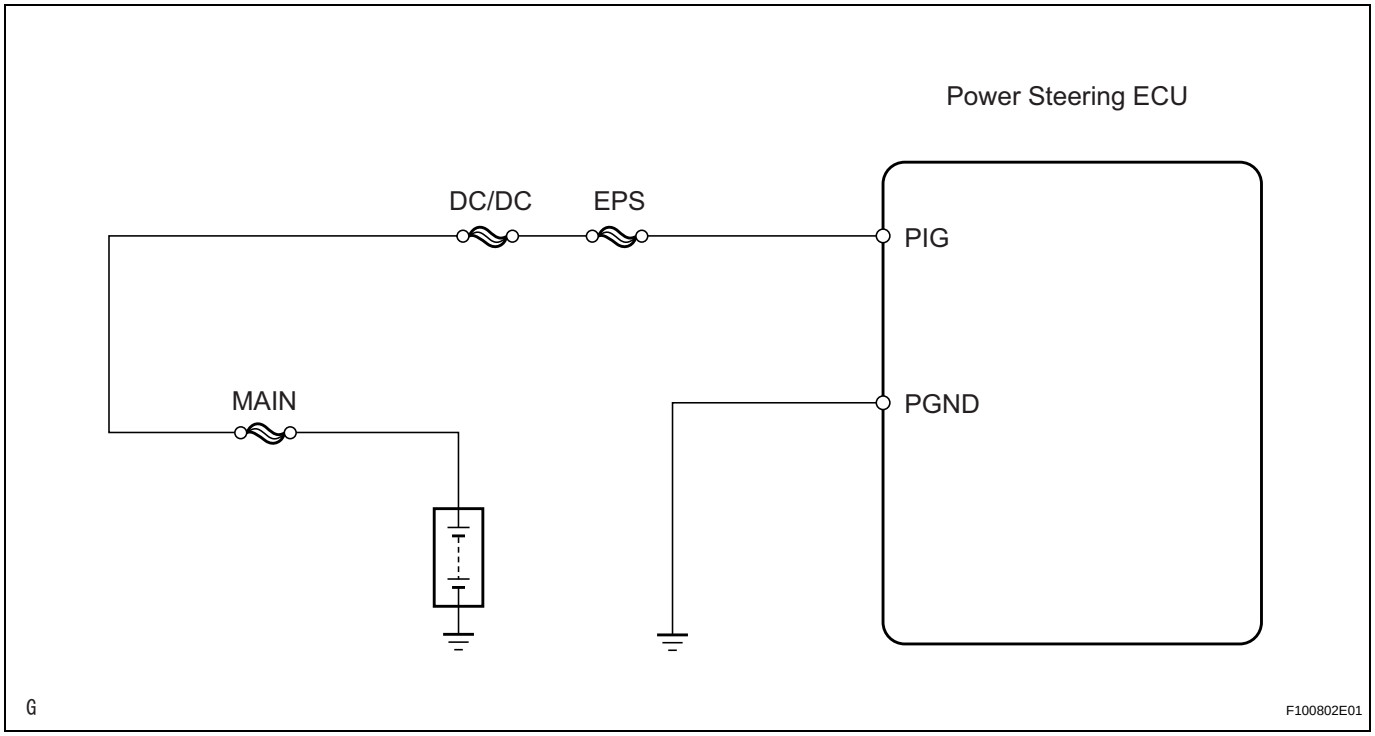

INSPECTION PROCEDURE

1	INSPECT FUSE (EPS)

(a) Remove the EPS H-fuse from the engine room junction block.

PS

(b) Measure the resistance of the fuse.
Standard resistance:
Below 1 Ω

NG → **INSPECT FOR SHORT IN ALL COMPONENTS CONNECTED TO FUSE AND REPAIR OR REPLACE THEM IF NEEDED, AND REPLACE FUSE**

OK

2 CHECK WIRE HARNESS (POWER STEERING ECU - BODY GROUND)

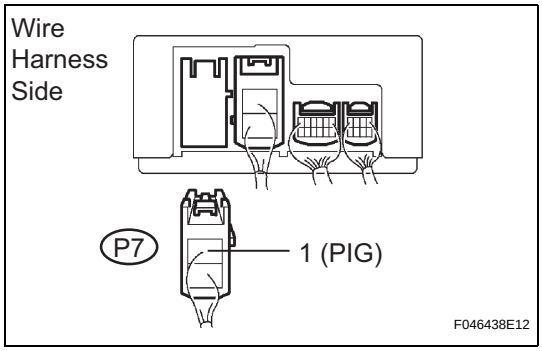

(a) Disconnect the P7 power steering ECU connector.
(b) Measure the voltage of the wire harness side connector.
Standard voltage

Tester Connection	Specified Condition
P7-1 (PIG) - Body ground	10 to 16 V

NG → **REPAIR OR REPLACE HARNESS AND CONNECTOR**

OK

3 CHECK WIRE HARNESS (POWER STEERING ECU - BODY GROUND)

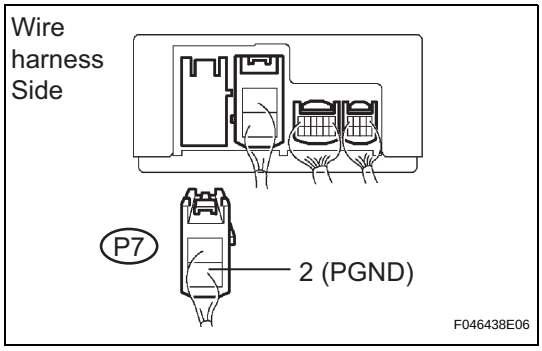

(a) Disconnect the P7 power steering ECU connector.
(b) Measure the resistance of the wire harness side connector.
Standard resistance

Tester Connection	Specified Condition
P7-2 (PGND) - Body ground	Below 1 Ω

NG → **REPAIR OR REPLACE HARNESS AND CONNECTOR**

OK

REPLACE POWER STEERING ECU

DTC	C1581	Assist Map Number Un-Writing

DESCRIPTION

The power steering ECU outputs this DTC when it determines that assist map is not written in the ECU. It is necessary to replace the power steering ECU when this code is output because this malfunction cannot be repaired.
HINT:
The assist map is data written in the power steering ECU to control assisting power. The assist map is selected from four types based on the vehicle specification communication data (designation and grade package information).

DTC No.	DTC Detection Condition	Trouble Area
C1581	Assist map is not written in the power steering ECU.	Power steering ECU

INSPECTION PROCEDURE

1	RECONFIRM DTC

(a) Check for DTCs.
OK:
DTCs other than C1581 are not output.

NG → **REPAIR CIRCUIT INDICATED BY OUTPUT CODE**

OK

REPLACE POWER STEERING ECU

DTC	U0073	Control Module Communication Bus OFF

DTC	U0121	Lost Communication with Anti-lock Brake System (ABS) Control Module

DESCRIPTION

The power steering ECU receives signals from the skid control ECU (ECB ECU) via CAN communication.

DTC No.	DTC Detection Condition	Trouble Area
U0073	CAN communication error (CAN bus is off)	CAN communication system
U0121	Skid control ECU communication error	• CAN communication system • Skid control ECU (when only U0121 is output)

HINT:
When 2 or more DTCs starting with [U] are output simultaneously, inspect the connectors and wire harness of each ECU.

WIRING DIAGRAM

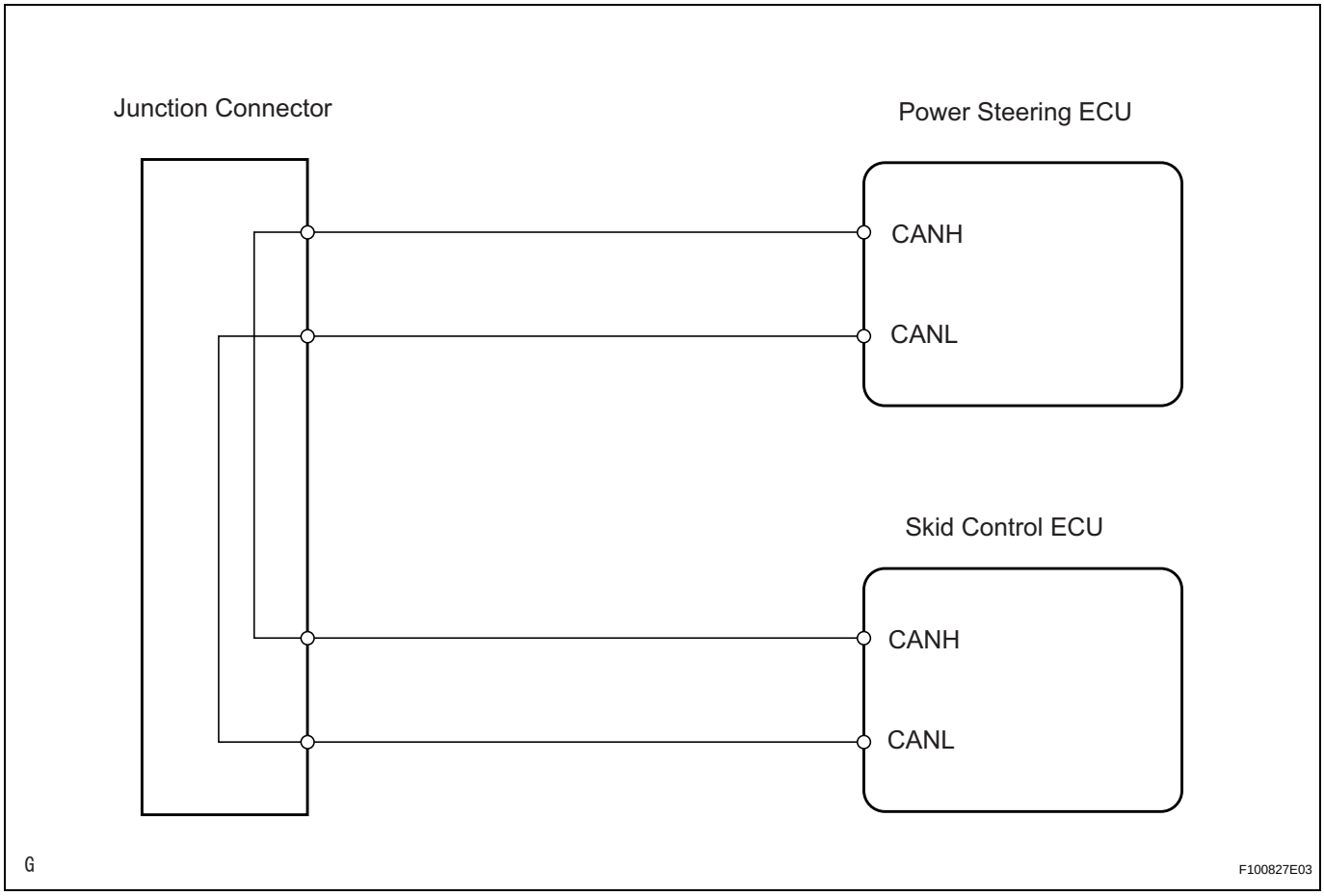

INSPECTION PROCEDURE

1	**CHECK DTC**

(a) Using the intelligent tester (with CAN VIM), check for DTCs.
OK:
DTC is not output.

OK → **PROCEED TO NEXT CIRCUIT INSPECTION SHOWN IN PROBLEM SYMPTOMS TABLE**

NG

GO TO CAN COMMUNICATION SYSTEM TROUBLESHOOTING

PS Warning is Always Shown on Multi-Display

DESCRIPTION

The troubleshooting procedure for a situation when no DTCs are output but a PS warning is always indicated is specified here. The PS warning remains on when there is an open in the IG circuit that inputs power source voltage to the power steering ECU.

WIRING DIAGRAM

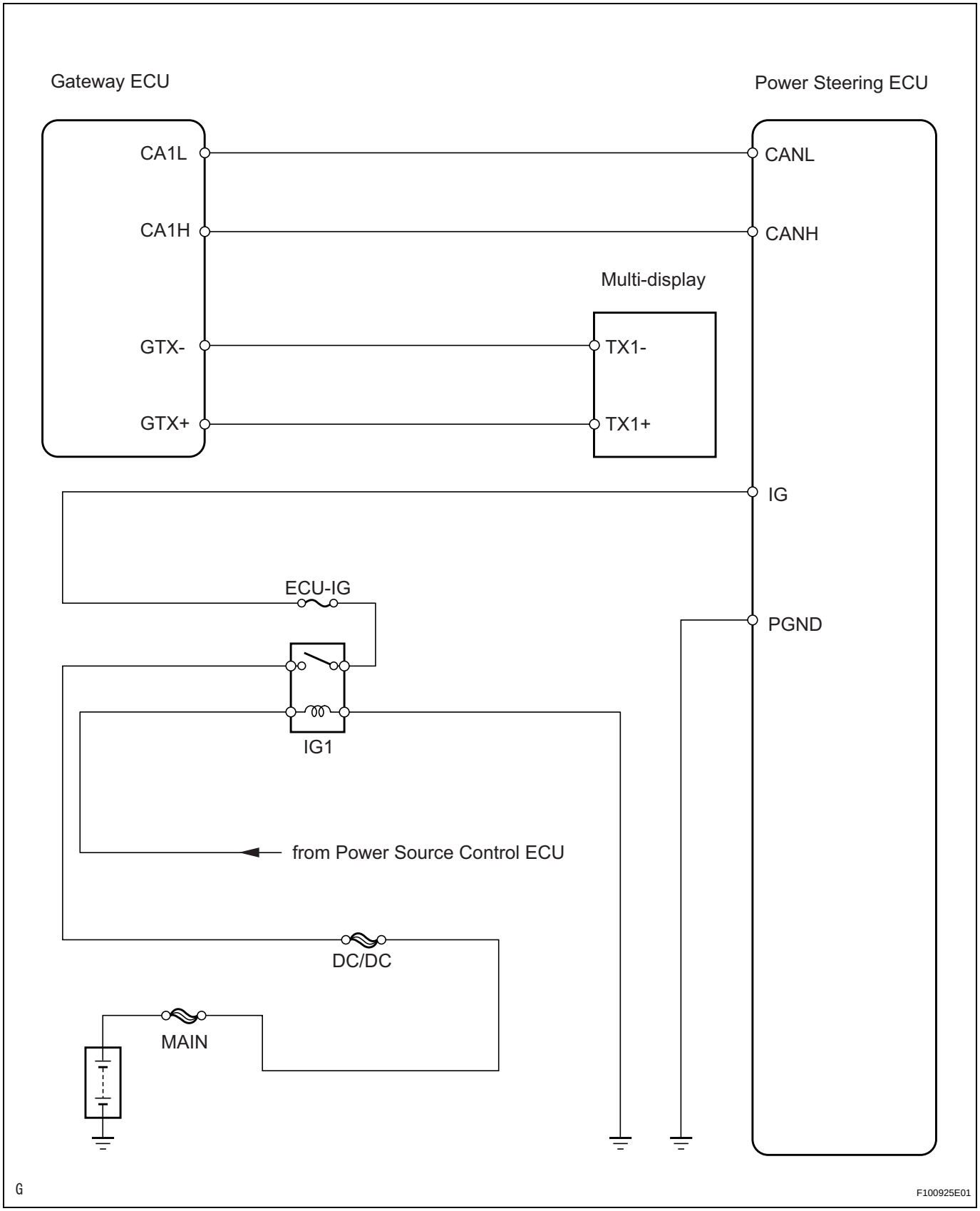

INSPECTION PROCEDURE

1	CHECK CONNECTOR CONNECTION CONDITION

(a) Check the indication condition of the PS warning while wiggling the power steering ECU connector and wire harness up and down, and right and left.
OK:
Warning indication does not change.

NG → **REPAIR OR REPLACE HARNESS AND CONNECTOR**

OK

2	INSPECT CAN COMMUNICATION SYSTEM

(a) Using the intelligent tester (with CAN VIM), check for DTCs and confirm that there are no problems in the CAN communication system.
OK:
DTCs are not output.

NG → **GO TO CAN COMMUNICATION SYSTEM**

OK

3	INSPECT MULTIPLEX COMMUNICATION SYSTEM (BEAN)

(a) Using the intelligent tester (with CAN VIM), check for DTCs and confirm that there are no problems in the multiplex communication system (BEAN).
OK:
DTCs are not output.

NG → **GO TO MULTIPLEX COMMUNICATION SYSTEM**

OK

4	CHECK WIRE HARNESS (POWER STEERING ECU - BATTERY)

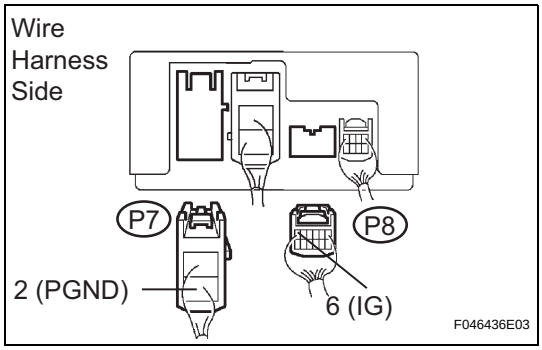

(a) Disconnect the P7 and P8 power steering ECU connectors.
(b) Turn the power switch ON (IG).
(c) Measure the voltage of the wire harness side connectors.
Standard voltage

Tester Connection	Condition	Specified Condition
P8-6 (IG) - P7-2 (PGND)	Power switch ON (IG)	10 to 16 V

NG → **REPAIR OR REPLACE HARNESS AND CONNECTOR**

OK

5	**REPLACE POWER STEERING ECU**

NEXT

6	**CHECK PS WARNING ON MULTI-DISPLAY**

(a) Check for the PS warning indication on the multi-display.
OK:
PS warning is not indicated.

OK → **END**

NG

REPLACE MULTI-DISPLAY

STEERING GEAR

COMPONENTS

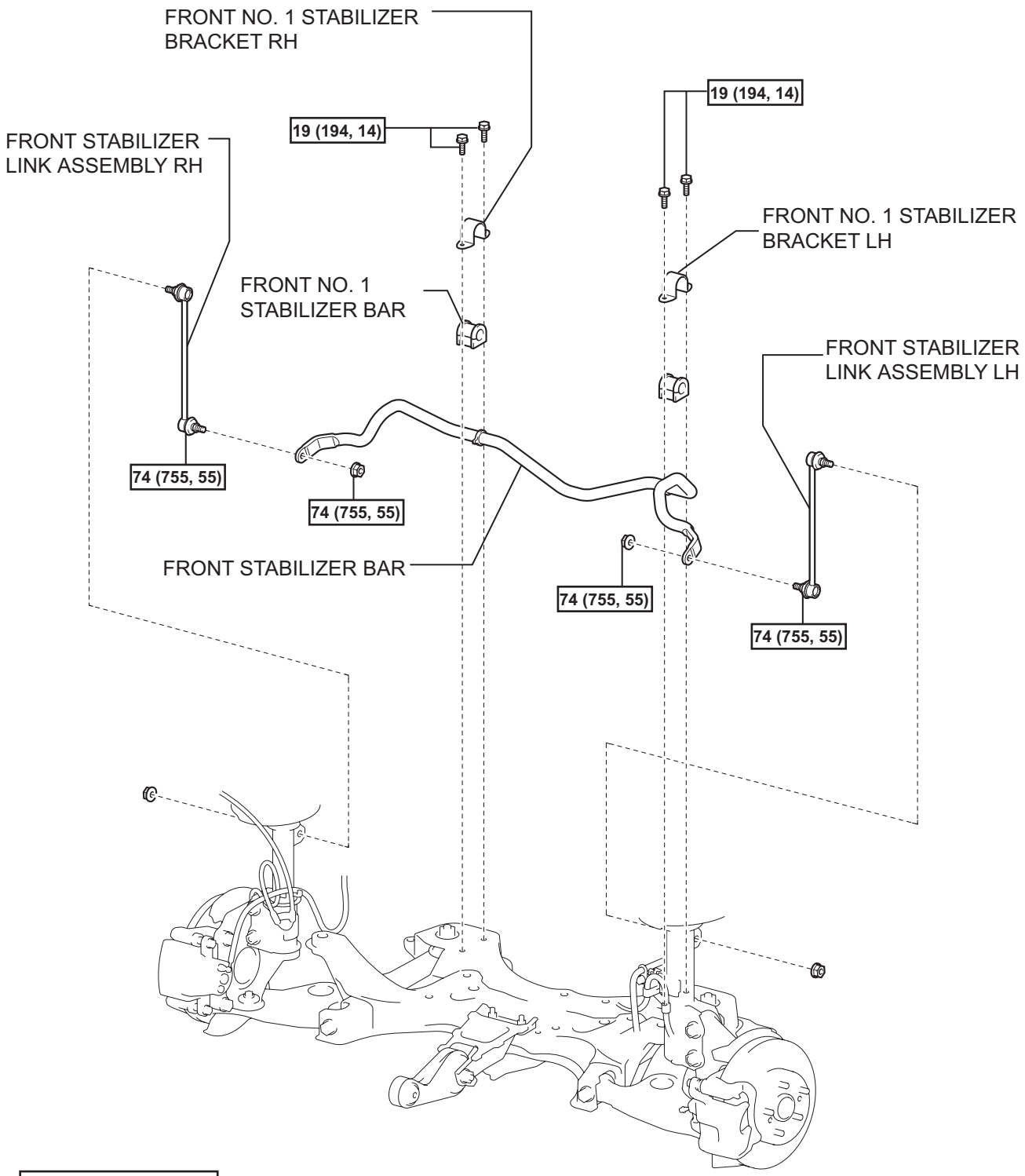

N*m (kgf*cm, ft.*lbf) : Specified torque

P

G100840E03

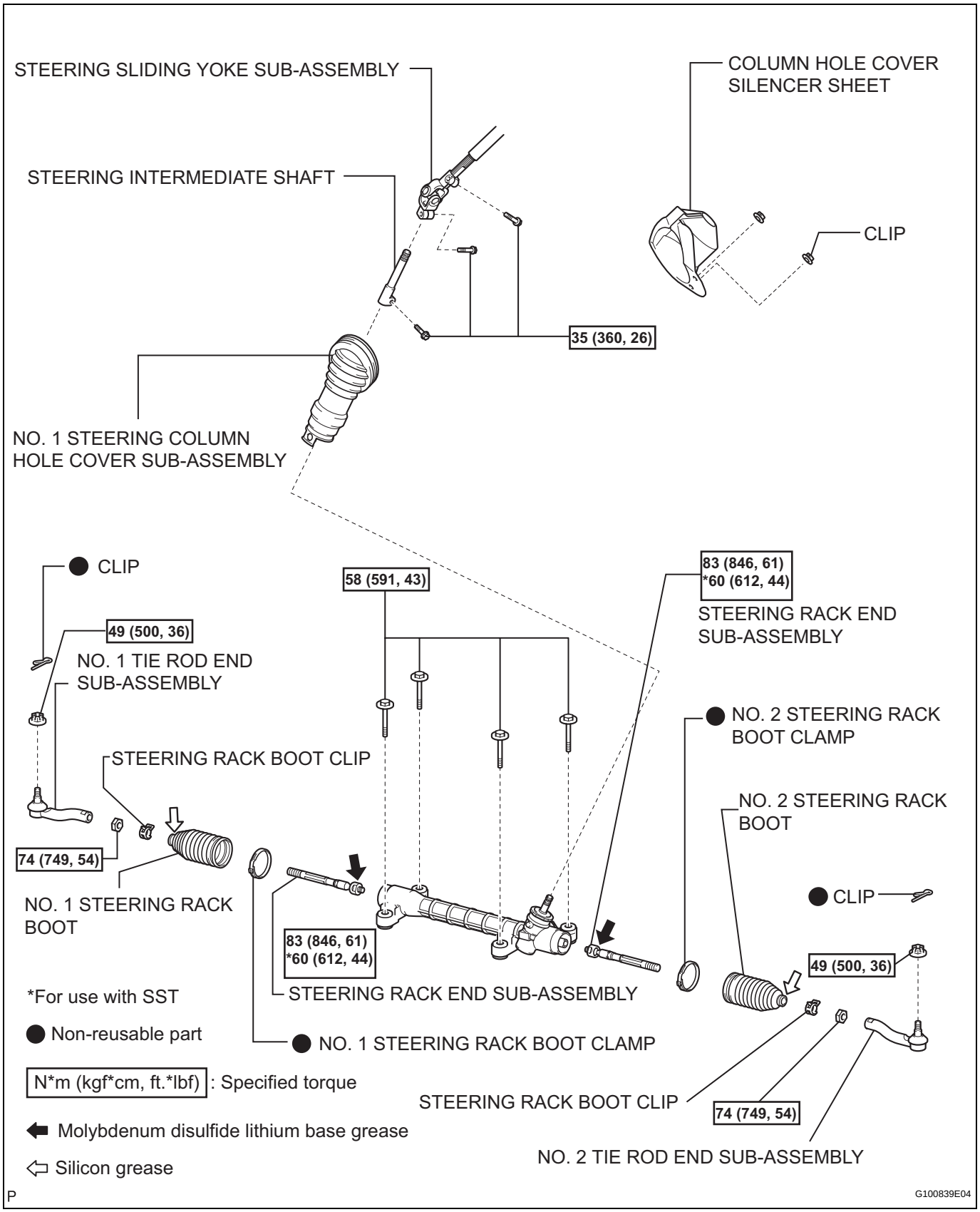
STEERING SLIDING YOKE SUB-ASSEMBLY
COLUMN HOLE COVER SILENCER SHEET
STEERING INTERMEDIATE SHAFT
CLIP
35 (360, 26)
NO. 1 STEERING COLUMN HOLE COVER SUB-ASSEMBLY
CLIP
58 (591, 43)
83 (846, 61) *60 (612, 44)
STEERING RACK END SUB-ASSEMBLY
49 (500, 36)
NO. 1 TIE ROD END SUB-ASSEMBLY
NO. 2 STEERING RACK BOOT CLAMP
STEERING RACK BOOT CLIP
NO. 2 STEERING RACK BOOT
74 (749, 54)
CLIP
NO. 1 STEERING RACK BOOT
83 (846, 61) *60 (612, 44)
49 (500, 36)
STEERING RACK END SUB-ASSEMBLY
*For use with SST
Non-reusable part
NO. 1 STEERING RACK BOOT CLAMP
N*m (kgf*cm, ft.*lbf) : Specified torque
STEERING RACK BOOT CLIP
74 (749, 54)
Molybdenum disulfide lithium base grease
NO. 2 TIE ROD END SUB-ASSEMBLY
Silicon grease
P
G100839E04

REMOVAL

1. **PLACE FRONT WHEELS FACING STRAIGHT AHEAD**
2. **DISCONNECT CABLE FROM NEGATIVE BATTERY TERMINAL**
   CAUTION:
   Wait at least 90 seconds after disconnecting the cable from the negative (-) battery terminal to prevent airbag and seat belt pretensioner activation.
3. **REMOVE COLUMN HOLE COVER SILENCER SHEET (See page SR-10)**
4. **SEPARATE STEERING SLIDING YOKE SUB-ASSEMBLY**
   (a) Fix the steering wheel with the seat belt in order to prevent rotation and damage to the spiral cable.

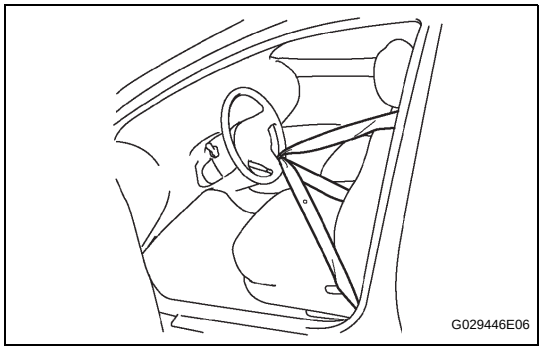

   (b) Put matchmarks in the sliding yoke and intermediate shaft.
   (c) Loosen the bolt labeled A and remove the bolt labeled B to separate the sliding yoke.

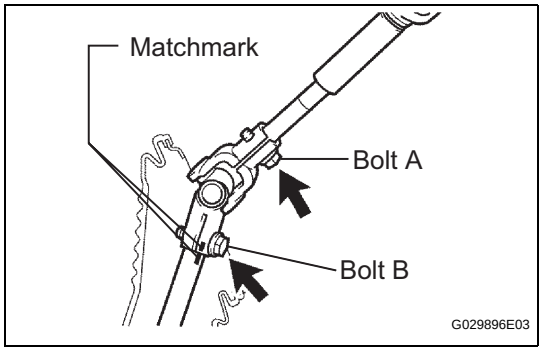

5. **DISCONNECT NO. 1 STEERING COLUMN HOLE COVER SUB-ASSEMBLY**
   (a) Remove the clip labeled A and disconnect the hole cover from the body.
   NOTICE:
   Do not damage the clip labeled B.

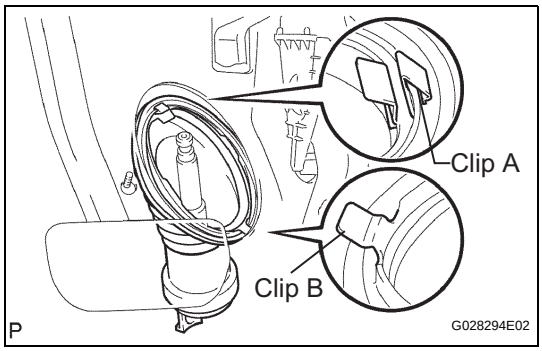

6. **REMOVE FRONT WHEELS**
7. **DISCONNECT NO. 2 TIE ROD END SUB-ASSEMBLY (See page DS-6)**
8. **DISCONNECT NO. 1 TIE ROD END SUB-ASSEMBLY**
   HINT:
   Use the same procedure described for the No. 2 tie rod end.
9. **REMOVE FRONT STABILIZER LINK ASSEMBLY LH (See page SP-28)**
10. **REMOVE FRONT STABILIZER LINK ASSEMBLY RH**
    HINT:
    Use the same procedure described for the LH.

11. REMOVE FRONT NO. 1 STABILIZER BRACKET LH (See page SP-28)

12. REMOVE FRONT NO. 1 STABILIZER BRACKET RH
HINT:
Use the same procedure described for the LH.

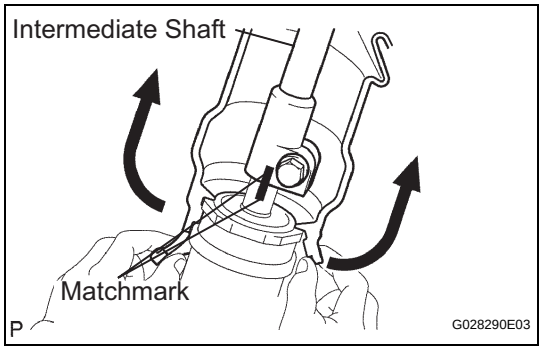

13. REMOVE STEERING INTERMEDIATE SHAFT
(a) Move the No. 1 column hole cover to the upper side of the vehicle and put matchmarks on the intermediate shaft and steering gear.
NOTICE:
Do not damage the No. 1 hole cover when moving it.
(b) Remove the bolt and remove the intermediate shaft from the inside of the vehicle.
(c) Remove the No. 1 column hole cover from the steering gear.
NOTICE:
Do not damage the No. 1 hole cover clip.

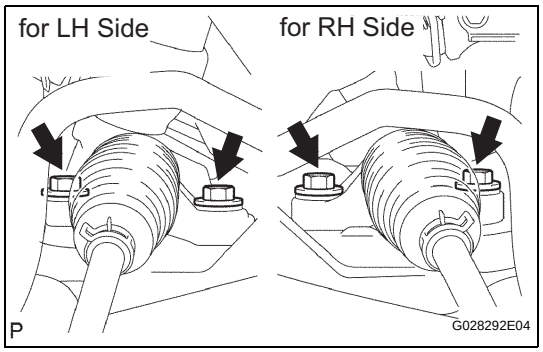

14. REMOVE STEERING GEAR ASSEMBLY
(a) Remove the 4 bolts and steering gear from the left side of the vehicle.
HINT:
Be careful not to hit the stabilizer bar when removing the steering gear.

DISASSEMBLY

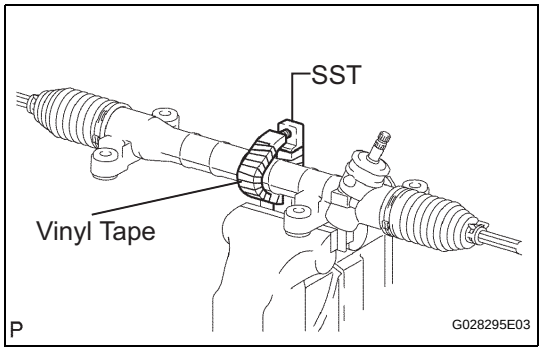

1. FIX STEERING GEAR ASSEMBLY
(a) Using SST wrapped with protective tape, secure the steering gear in a vise.
SST 09612-00012
HINT:
Remove and reinstall the SST as needed.

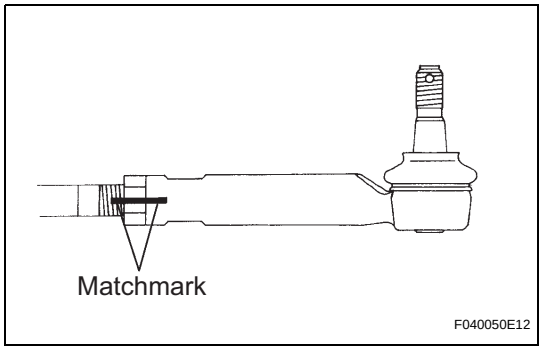

2. REMOVE TIE ROD END SUB-ASSEMBLY LH
(a) Put matchmarks on the tie rod end LH and rack end.
(b) Remove the tie rod end LH and lock nut.

3. REMOVE TIE ROD END SUB-ASSEMBLY RH
HINT:
Use the same procedure described for the LH.

4. REMOVE STEERING RACK BOOT CLIP
(a) Using pliers, remove the 2 rack boot clips (for RH and LH).

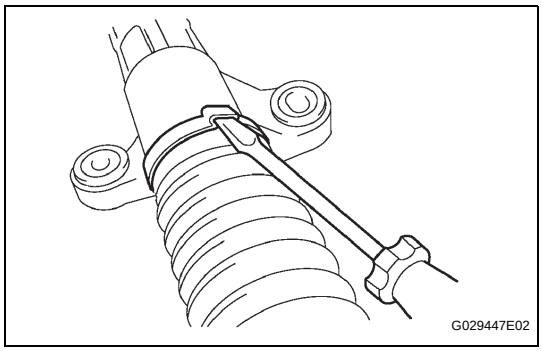

5. REMOVE NO. 2 STEERING RACK BOOT CLAMP

(a) Using a screwdriver, unstake and remove the clamp.

NOTICE:

Do not damage the boot.

6. REMOVE NO. 1 STEERING RACK BOOT CLAMP

HINT:

Use the same procedures described for the No. 2 rack boot clamp.

7. REMOVE NO. 2 STEERING RACK BOOT

8. REMOVE NO. 1 STEERING RACK BOOT

9. REMOVE STEERING RACK END SUB-ASSEMBLY

(a) Using 2 SST, remove the rack end (for LH side).

SST 09922-10010

NOTICE:

- **Use SST in the correct direction as shown in the illustration.**
- **Securely hold the steering rack.**

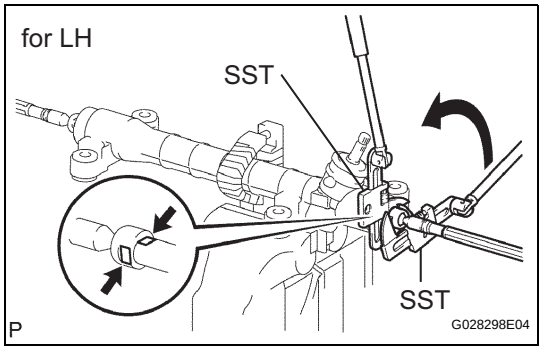

(b) Using 2 SST, hold the steering rack LH side and remove the rack end (for RH side).

SST 09922-10010

NOTICE:

- **Use SST in the correct direction as shown in the illustration.**
- **Securely hold the steering rack.**

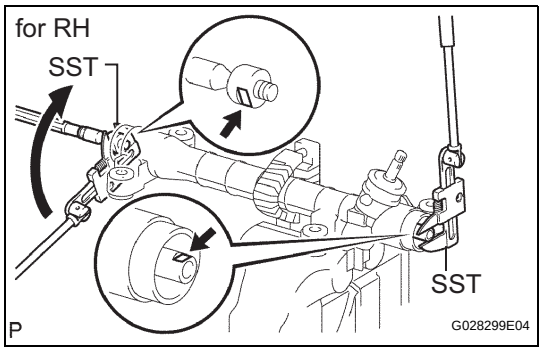

INSPECTION

1. INSPECT TIE ROD END SUB-ASSEMBLY LH

(a) Secure the tie rod end LH boll join in a vise through aluminum plates.
NOTICE:
Do not overtighten the vise.

(b) Install the castle nut to the stud bolt.

(c) Flip the ball joint back and forth 5 times or more.

(d) Set a torque wrench to the nut, turn the ball joint continuously at a rate of 3 to 5 seconds per turn, and check the turning torque on the 5th turn.
Standard turning torque:
2.0 N*m (20.4 kgf*cm, 18 in. lbf) or less
If turning torque is out of specification, replace the tie rod end LH with a new one.

2. INSPECT TIE ROD END SUB-ASSEMBLY RH

HINT:
Use the same procedures described for the LH side.

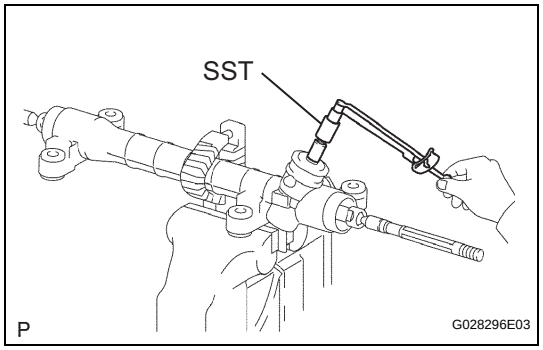

3. INSPECT TOTAL PRELOAD

(a) Using SST, inspect the total preload.
SST 09616-00011
Standard total preload (turning):
0.6 to 1.2 N*m (6.2 to 12.2 kgf*cm, 5 to 11 in.*lbf)
NOTICE:
Inspect around the steering rack center position.
If the total preload is out of specification, replace the steering gear with a new one.

REASSEMBLY

1. INSTALL STEERING RACK END SUB-ASSEMBLY

(a) Fill up the ball joints of the RH and LH rack ends with molybdenum disulfide lithium base grease.

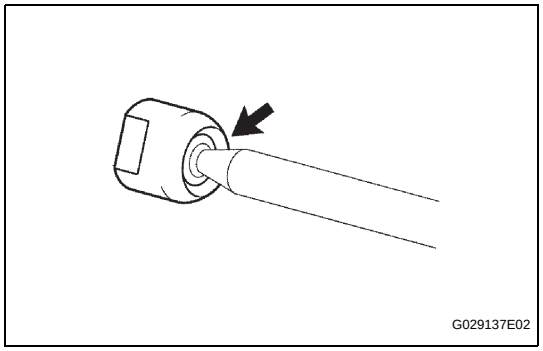

(b) Using 2 SST, hold the steering rack LH side and install the rack end (for RH side).
SST 09922-10010
Torque: 60 N*m (612 kgf*cm, 44 ft.*lbf)
NOTICE:
- **Use a torque wrench with a fulcrum length of 345 mm (13.58 in.).**
- **Use SST in the correct direction as shown in the illustration.**
- **Securely hold the steering rack.**

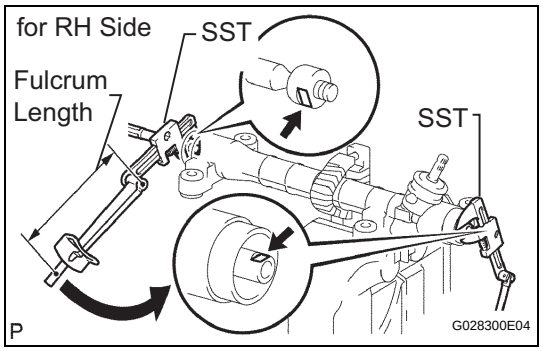

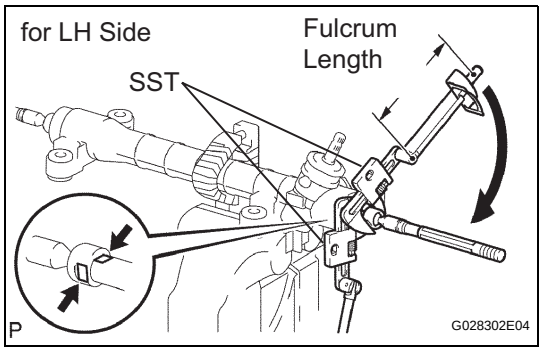

(c) Using 2 SST, install the rack end (for LH side).
SST 09922-10010
Torque: 60 N*m (612 kgf*cm, 44 ft.*lbf)
NOTICE:
- **Use a torque wrench with a fulcrum length of 345 mm (13.58 in.).**
- **Use SST in the correct direction as shown in the illustration.**
- **Securely hold the steering rack.**

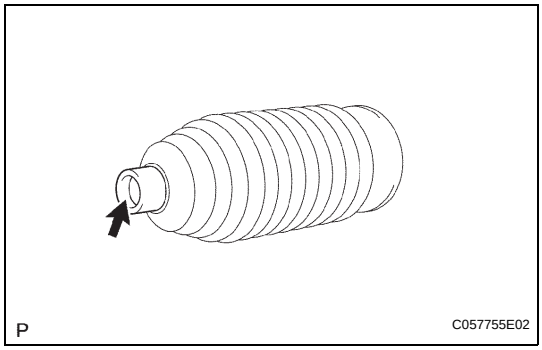

2. INSTALL NO. 2 STEERING RACK BOOT
(a) Apply silicon grease to the inside of the small opening of the boot.
(b) Install the boot in the groove on the rack housing.
NOTICE:
Make sure that the boot is not twisted.

3. INSTALL NO. 1 STEERING RACK BOOT
HINT:
Use the same procedures described for the No. 2 boot.

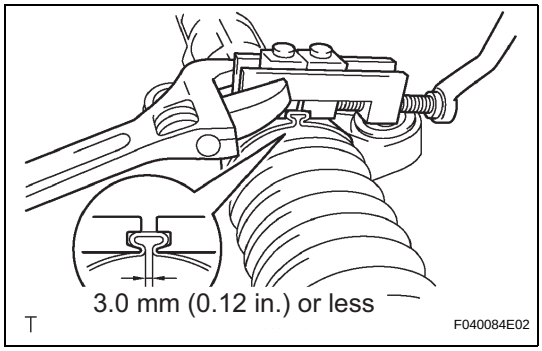

4. INSTALL NO. 2 STEERING RACK BOOT CLAMP
(a) Install a new clamp to the boot.
NOTICE:
Do not damage the boot.
(b) While pushing SST to the rack housing, pinch the clamp so that the clearance is within specification.
SST 09521-24010
Standard clearance:
3.0 mm (0.12 in.) or less
NOTICE:
Make sure that the boot is not twisted.

5. INSTALL NO. 1 STEERING RACK BOOT CLAMP
HINT:
Use the same procedures described for the No. 2 rack boot clamp.

6. INSTALL STEERING RACK BOOT CLIP
(a) Using pliers, install the 2 rack boot clips to the RH and LH rack boots.

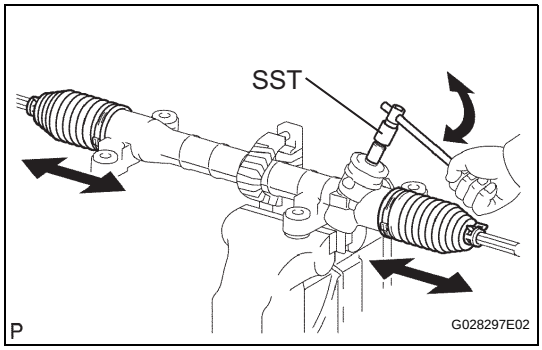

7. INSPECT STEERING GEAR ASSEMBLY
(a) Using SST, turn the pinion shaft and check that the RH and LH rack boots expand and contract smoothly, reinstall it with a new rack boot clamp.
SST 09616-00011
If the rack boot does not expand and contract smoothly, reinstall it with a new rack boot clamp.

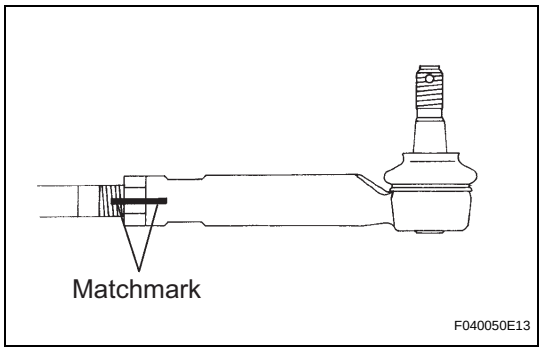

8. **INSTALL TIE ROD END SUB-ASSEMBLY LH**
   (a) Screw the lock nut and tie rod end LH on the rack end unit the matchmarks are aligned and temporarily tighten the lock nut.
   HINT:
   Fully tighten the lock nut after adjusting toe-in.

9. **REMOVE TIE ROD END SUB-ASSEMBLY RH**
   HINT:
   Use the same procedures described for the LH side.

INSTALLATION

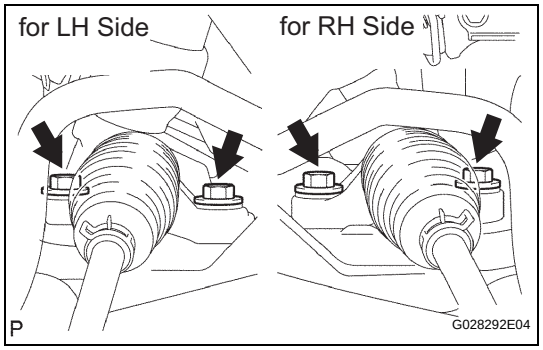

1. **INSTALL STEERING GEAR ASSEMBLY**
   (a) Install the steering gear from the left side of the vehicle.
   HINT:
   Be careful not to hit the stabilizer bar when installing the steering gear.
   (b) Install the No. 1 column hole cover to the steering gear.
   (c) Install the steering gear to the crossmember with the 4 bolts.
   Torque: 58 N*m (591 kgf*cm, 43 ft.*lbf)

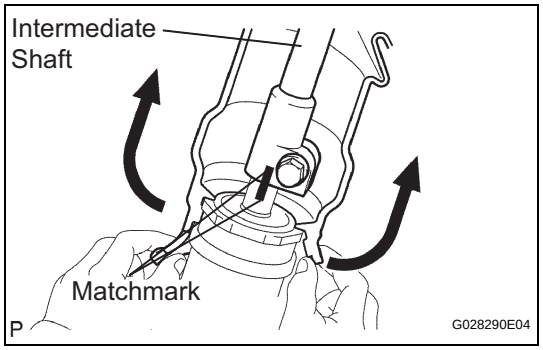

2. **INSTALL STEERING INTERMEDIATE SHAFT**
   (a) Move the No. 1 column hole cover to the upper side of the vehicle, align the matchmarks, and install the intermediate shaft from the inside of the vehicle.
   NOTICE:
   Do not damage the No. 1 hole cover when moving it.
   (b) Install the bolt.
   Torque: 35 N*m (360 kgf*cm, 26 ft.*lbf)
   (c) Fit the recessed part on the No. 1 column hole cover to the steering gear.
   NOTICE:
   Make sure that the No. 1 hole cover is securely installed.

3. **INSTALL FRONT NO. 1 STABILIZER BRACKET LH (See page SP-29)**

4. **INSTALL FRONT NO. 1 STABILIZER BRACKET RH**
   HINT:
   Use the same procedures described for the LH side.

5. **INSTALL FRONT STABILIZER LINK ASSEMBLY LH (See page SP-30)**

6. **INSTALL FRONT STABILIZER LINK ASSEMBLY RH**
   HINT:
   Use the same procedures described for the LH side.

7. **CONNECT NO. 1 TIE ROD END SUB-ASSEMBLY (See page DS-16)**

8. **CONNECT NO. 2 TIE ROD END SUB-ASSEMBLY**
HINT:
Use the same procedures described for the No. 1 tie rod end.

9. **INSTALL FRONT WHEEL**
Torque: 103 N*m (1,050 kgf*cm, 76 ft.*lbf)

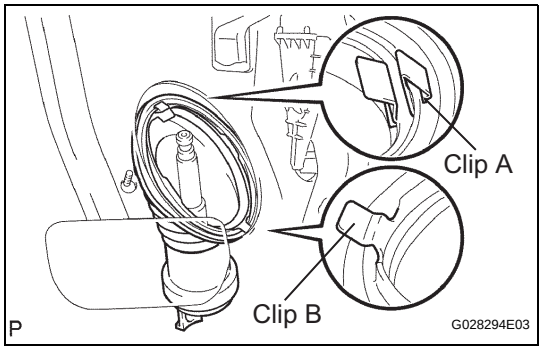

10. **INSTALL NO. 1 STEERING COLUMN HOLE COVER SUB-ASSEMBLY**
(a) Install the clip labeled B to the vehicle body and install the No. 1 column hole cover to the vehicle body with the clip labeled A.
NOTICE:
Make sure that the lip of the No. 1 hole cover fits on the dash panel correctly.

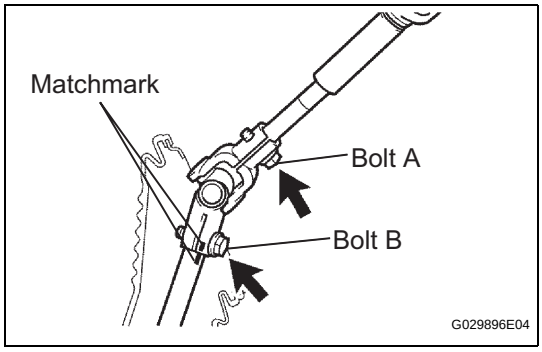

11. **INSTALL STEERING SLIDING YOKE SUB-ASSEMBLY**
(a) Align the matchmarks and install the sliding yoke to the intermediate shaft with the bolt labeled B.
Torque: 35 N*m (360 kgf*cm, 26 ft.*lbf)
(b) Tighten the bolt labeled A.
Torque: 35 N*m (360 kgf*cm, 26 ft.*lbf)

12. **INSTALL COLUMN HOLE COVER SILENCER SHEET**

13. **REPLACE FRONT WHEELS FACING STRAIGHT AHEAD**

14. **INSPECT AND ADJUST FRONT WHEEL ALIGNMENT**
(a) Inspect and adjust the front wheel alignment (see page SP-2).

15. **PERFORM STEERING ANGLE SENSOR ZERO POINT CALIBRATION**
(a) Perform initialization (see page IN-32).
NOTICE:
Certain systems need to be initialized after disconnecting and reconnecting the cable from the negative (-) battery terminal.